BELLSOUTH® / CLEC Agreement

Customer Name: MCI WorldCom Communications, Inc.

MCI WorldCom Communications Inc. - TN	2
General Terms Conditions Part A	3
General Terms Conditions Part B	34
Attachment 1	52
Attachment 1 Table 1	57
Attachment 2	91
Attachment 3	101
Attachment 4	181
Attachment 5	213
Attachment 6	394
Attachment 7	428
Attachment 8	438
Attachment 9	505
Attachment 10	530
Attachment 10 SQMs	532
MCI WorldCom - TN Port Amend	718
MCI WorldCom UNE Combo Reinstatement - TN	725
MCI WorldCom TN Expedite Rate & Notices Change	727
MCI WorldCom PLF Factor, Recip Comp and Transit Traffic Amendment-TN	730
MCI WorldCom Billing Dispute Payment Amendment - TN	735
MCI WorldCom CCXC, On-Off Premises Extension, LNP and Waive Adoption Right Amendment - TN	738
MCI WorldCom QuickServ and Notices Change Amendment - TN	745

Note: This page is not part of the actual signed contract/amendment, but is present for record keeping purposes only.

By and Between

BellSouth Telecommunications, Inc.

And

MCI WorldCom Communications, Inc.

MCI WorldCom Communications/BellSouth INTERCONNECTION AGREEMENT

This Interconnection Agreement (the "Agreement"), effective _____, 2001 (the “Effective Date"), is entered into by and between BellSouth Telecommunications, Inc. (“BellSouth”), a Georgia corporation, and MCI WorldCom Communications, Inc. (“MCIm”), a Delaware corporation, and to establish the rates, terms and conditions for interconnection, local resale, ancillary services and purchase of unbundled network elements (individually referred to as the “Service" or collectively as the "Services"). BellSouth and MCIm may be referred to in this Agreement individually as a “Party” and collectively as the “Parties.”

WHEREAS, the Parties wish to interconnect their local exchange networks in a technically and economically efficient manner for the transmission and termination of calls ("Interconnection"); and

WHEREAS, MCIm wishes to purchase Services for resale to others and BellSouth is willing to provide such service pursuant to the terms and conditions of this Agreement; and

WHEREAS, MCIm wishes to purchase on an unbundled basis Network Elements, and BellSouth is willing to provide such Services subject to the terms and conditions of this Agreement; and

WHEREAS, MCIm wishes to purchase ancillary services such as access to poles, ducts conduits and rights of way and collocation of equipment at BellSouth’s facilities on the terms and subject to the conditions of this Agreement; and

WHEREAS, the Parties intend the rates, terms and conditions of this Agreement, and their performance of obligations thereunder, to comply with the Communications Act of 1934, as amended by the Telecommunications Act of 1996 (the “Act”), the applicable rules and regulations of the Federal Communications Commission (“FCC”) in effect, and the orders, rules and regulations of the state regulatory body.

Now, therefore, in consideration of the terms and conditions contained herein, BellSouth and MCIm hereby mutually agree as follows:

PART A
GENERAL TERMS AND CONDITIONS

Section 1. Scope of this Agreement

1.1 This Agreement, including General Terms and Conditions (Parts A and B), and all Attachments hereto, specifies the rights and obligations of each Party with respect to the purchase and sale of Interconnection, Local Resale, Network Elements and ancillary services. This PART A sets forth the general terms and conditions governing this Agreement. Certain terms used in this Agreement shall have the meanings defined in PART B -- DEFINITIONS, or as otherwise elsewhere defined throughout this Agreement. Other terms used but not defined herein have the meanings ascribed to them in the Act and the applicable FCC Rules and Regulations in effect.

LIST OF ATTACHMENTS:

1. Price Schedule
2. Local Resale
3. Network Elements
4. Interconnection
5. Collocation
6. Rights of Way
7. Number Portability
8. Business Process Requirements
9. Ancillary Services
10. Performance Measurements

1.2 The Parties shall provide the Services pursuant to this Agreement. Except as provided in this Agreement, BellSouth shall not discontinue or refuse to provide any service provided or required hereunder.

1.3 BellSouth must operate its network and provision Services in a manner that avoids unfair discrimination and anti-competitive effects, and must endeavor to provide MCIm with service of at least the same quality that it provides to itself.

Section 2. Regulatory Approvals

2.1 This Agreement, and any amendment or modification hereof, will be submitted to the state regulatory body for approval in accordance with Section 252 of the Act. Should the state regulatory body deny approval of the Agreement or any part thereof, the Parties agree to consider whether any additional and appropriate judicial or administrative efforts are necessary to gain approval of said part or Agreement. If it is mutually determined that the part or Agreement must be renegotiated to gain approval by the state regulatory body, the Parties agree to do so on an expedited basis. If the Parties fail to

reach agreement, either Party may seek resolution pursuant to Section 22 (Dispute Resolution Procedures) of this Agreement. BellSouth shall be responsible for filing the Agreement with the appropriate regulatory authority. Filing fees will be divided equally between the Parties. To the extent public interest notice is required, MCIm shall be responsible for such publication, and the costs thereof shall be divided equally between the Parties.

2.2. In the case of a conflict between a provision of this Agreement and a tariff filed by either Party, the conflict shall be resolved in favor of this Agreement.

2.3 In the event that any effective and applicable legislative, regulatory, judicial or other legal action materially affects any material terms of this Agreement, or the ability of MCIm or BellSouth to perform any material terms of this Agreement, or imposes new or modified rights or obligations on the Parties, or makes any provision hereof unlawful, or in the event a judicial or administrative stay of such action is not sought or granted, MCIm or BellSouth may, on thirty (30) days written notice (delivered not later than thirty (30) days following the date on which such action has become legally binding and effective) require that such terms be renegotiated, and the Parties shall renegotiate in good faith such mutually acceptable new terms as may be required. In the event that such new terms are not renegotiated within ninety (90) days after such notice, either Party may invoke the procedures of Section 22 (Dispute Resolution Procedures) of this Part A.

2.4 The Parties intend that any additional services negotiated and agreed to by the Parties relating to the subject matter of this Agreement will be incorporated into this Agreement by amendment.

2.5 BellSouth shall make available, pursuant to 47 USC § 252(i) and the FCC rules and regulations regarding such availability, to MCIm, at the same rates, and on the same terms and conditions, any interconnection, service, or network element provided under any other agreement filed and approved pursuant to 47 USC § 252. The adopted interconnection, service, or network element and agreement shall apply to the same states as such other agreement and for the identical term of such other agreement. The adopted rates, terms, and conditions shall be effective as of the date the Parties sign an agreement or amendment incorporating such adopted rates, terms, or conditions.

Section 3. Term of Agreement

3.1 This Agreement becomes binding upon execution by the Parties and will continue for a period of 3 years, unless earlier terminated in accordance with Section 19 (Termination) of this Part A. No later than 270 days prior to the expiration of this Agreement, the Parties agree to commence negotiations with regard to the terms, conditions and prices of a follow-on Agreement for the provision of services to be effective on or before the expiration date of this

Agreement ("Follow-on Agreement").

3.2 If, within 135 days of commencing the negotiation referenced above, the Parties are unable to satisfactorily negotiate new terms, conditions and prices, either Party may petition the State regulatory body to establish an appropriate Follow-on Agreement pursuant to 47 U.S.C. Sec. 252. The Parties agree that in such event they shall encourage the State regulatory body to issue its order regarding such Follow-on Agreement no later than the expiration date of this Agreement. The Parties further agree that in the event the State regulatory body does not issue its order by the expiration date of this Agreement or if the Parties continue beyond the expiration date of this Agreement to negotiate without State regulatory body intervention, the terms, conditions and prices ultimately ordered by the State regulatory body, or negotiated by the Parties, will be effective retroactive to the day following the expiration date of this Agreement. Until the Follow-on Agreement becomes effective, and subject to subsection 3.3 below, BellSouth shall provide Services pursuant to the terms, conditions and prices of this Agreement that are then in effect.

3.3 Notwithstanding the foregoing, in the event that as of the date of expiration of this Agreement, the Parties have not entered into a Subsequent Agreement and either no arbitration proceeding has been filed in accordance with subsection 3.2 above, or the Parties have not mutually agreed (where permissible) to extend the arbitration window for petitioning the applicable Commission(s) for resolution of those terms upon which the Parties have not agreed, then either Party may terminate this Agreement upon sixty (60) days notice to the other Party. In the event that BellSouth terminates this Agreement as provided above, BellSouth shall continue to offer services to MCIm pursuant to the terms, conditions and rates set forth in BellSouth's Statement of Generally Available Terms (SGAT) to the extent an SGAT has been approved by the applicable Commission(s). If any state Commission has not approved a BellSouth SGAT, then upon BellSouth's termination of this Agreement as provided herein, BellSouth will continue to provide services to MCIm pursuant to BellSouth's then current standard interconnection agreement. In the event that the SGAT or BellSouth's standard interconnection agreement becomes effective as between the Parties, the Parties may continue to negotiate a Subsequent Agreement, and the terms of such Subsequent Agreement shall be effective retroactive to the day following expiration of this Agreement. Nothing herein shall be deemed to prevent MCIm from adopting an interconnection agreement between BellSouth and a third party pursuant to 47 CFR 51.809.

Section 4. Charges and Payment

In consideration of the Services provided under this Agreement, the Parties shall pay the charges set forth in Attachment 1. The billing and payment procedures for charges incurred hereunder are set forth in Attachment 8.

Section 5. Assignment and Subcontract

5.1 Any assignment by either Party to any non-affiliated entity of any right, obligation or duty, or of any other interest hereunder, in whole or in part, without the prior written consent of the other Party shall be void. A Party may assign this Agreement or any right, obligation, duty or other interest hereunder to an Affiliate company of the Party without the consent of the other Party upon written notice. The Parties agree to execute an amendment to this Agreement in a timely manner reflecting any such assignment. All obligations and duties of any Party under this Agreement shall be binding on all successors in interest and assigns of such Party. No assignment or delegation hereof shall relieve the assignor of its obligations under this Agreement in the event that the assignee fails to perform such obligations.

5.2 If any Party's obligation under this Agreement is performed by a subcontractor or Affiliate, the Party subcontracting the obligation nevertheless shall remain fully responsible for the performance of this Agreement in accordance with its terms, and shall be solely responsible for payments due its subcontractors or Affiliates. No subcontractor or Affiliate shall be deemed a third party beneficiary for any purposes under this Agreement.

Section 6. Compliance with Laws

All terms, conditions and operations under this Agreement shall be performed in accordance with all applicable laws, regulations and judicial or regulatory decisions of all duly constituted governmental authorities with appropriate jurisdiction, and this Agreement shall be implemented consistent with the applicable rules and regulations of the FCC and the state regulatory body in effect. Each Party shall be responsible for obtaining and keeping in effect all FCC, state commission, franchise authority and other regulatory approvals that may be required in connection with the performance of its obligations under this Agreement. In the event the basis for this Agreement (e.g., the Act, FCC Rules and Regulations, orders of the state regulatory body) is held to be invalid or changed for any reason, this Agreement shall survive, and subject to Section 3 of these General Terms and Conditions, the Parties shall promptly renegotiate any provisions of this Agreement, which in the absence of such invalidated or changed Act, Rule or Regulation are insufficiently clear to be effectuated.

Section 7. Governing Law

This Agreement shall be governed by and construed in accordance with federal and Tennessee substantive telecommunications law, where applicable. In all other respects, this Agreement shall be governed by and construed in accordance with the laws of the State of Georgia.

Section 8. Relationship of Parties

Each Party is an independent contractor, and has and hereby retains the right to exercise full control of and supervision over its own performance of its obligations under this Agreement and retains full control over the employment, direction, compensation and discharge of all employees assisting in the performance of such obligations.

Section 9. No Third Party Beneficiaries

The provisions of this Agreement are for the benefit of the Parties hereto and not for any other person. This Agreement shall not provide any person not a Party hereto with any remedy, claim, liability, reimbursement, claim of action, or other right in excess of those existing without reference hereto.

Section 10. Intellectual Property Rights and Indemnification

10.1 Any intellectual property which originates from or is developed by a Party shall remain in the exclusive ownership of that Party. Except for a limited license to use patents or copyrights to the extent necessary for the Parties to use any facilities or equipment (including software) or to receive any service solely as provided under this Agreement, no license in patent, copyright, trademark or trade secret, or other proprietary or intellectual property right now or hereafter owned, controlled or licensable by a Party, is granted to the other Party or shall be implied or arise by estoppel. It is the responsibility of each Party to ensure, at no additional cost to the other Party, that it has obtained any necessary licenses in relation to intellectual property of third parties used in its network that may be required to enable the other Party to use any facilities or equipment (including software), to receive any service, or to perform its respective obligations under this Agreement.

10.2 The Party providing a service pursuant to this Agreement shall defend the Party receiving such service or data provided as a result of such service against claims of infringement arising solely from the use by the receiving Party of such service and shall indemnify the receiving Party for any damages awarded based solely on such claims in accordance with Section 11 of this Part A.

10.3 In the event that use of any facilities or equipment (including software), becomes or, in reasonable judgment of the Party who owns the affected network is likely to become, the subject of a claim, action, suit, or proceeding based on intellectual property infringement, then said Party shall promptly and at its sole expense, but subject to the limitations of liability set forth below:

(i) modify or replace the applicable facilities or equipment (including software) while maintaining form and function, or (ii) obtain a license sufficient to allow such use to continue. In the event (i) or (ii) are commercially unreasonable, then said Party may, (iii) terminate, upon reasonable notice, this contract with respect to use of, or services

provided through use of, the affected facilities or equipment (including software), but solely to the extent required to avoid the infringement claim.

10.4 Neither Party's obligations under this Section shall apply to the extent the infringement is caused by: (i) modification of the facilities or equipment (including software) by the indemnitee; (ii) use by the indemnitee of the facilities or equipment (including software) in combination with equipment or facilities (including software) not provided or authorized by the indemnitor provided the facilities or equipment (including software) would not be infringing if used alone; (iii) conformance to specifications of the indemnitee which would necessarily result in infringement; or (iv) continued use by the indemnitee of the affected facilities or equipment (including software) after being placed on notice to discontinue use as set forth herein.

10.5 The foregoing shall constitute the Parties' sole and exclusive remedies and obligations with respect to a third party claim of intellectual property infringement arising out of the conduct of business under this Agreement.

Section 11 Indemnification and Liability

11.1. Liability Cap.

11.1.1 With respect to any claim or suit, whether based in contract, tort or any other theory of legal liability, by MCIm, any MCIm customer or by any other person or entity, for damages associated with any of the services provided by BellSouth pursuant to or in connection with this Agreement, including but not limited to the installation, provision, preemption, termination, maintenance, repair or restoration of service, and subject to the provisions of the remainder of this Section, BellSouth's liability shall be limited to an amount equal to the proportionate charge for the service provided pursuant to this Agreement for the period during which the service was affected. Notwithstanding the foregoing, claims for damages by MCIm, any MCIm customer or any other person or entity shall not be subject to such limitation of liability when such claims result from the 1) gross negligence or willful misconduct (including intentional torts) of BellSouth; or 2) BellSouth's refusal to comply with the terms of this Agreement, provided that BellSouth's actions or inactions based upon a reasonable and good-faith interpretation of the terms of this Agreement shall not be deemed a refusal to comply. In addition, nothing in this Section shall be interpreted to limit the remedies, if any, provided for in Attachment 10 of this Agreement.

11.1.2 With respect to any claim or suit, whether based in contract, tort or any other theory of legal liability, by BellSouth, any BellSouth customer or by any other person or entity, for damages associated with

any of the services provided by MCIm pursuant to or in connection with this Agreement, including but not limited to the installation, provision, preemption, termination, maintenance, repair or restoration of service, and subject to the provisions of the remainder of this Section, MCIm's liability shall be limited to an amount equal to the proportionate charge for the service provided pursuant to this Agreement for the period during which the service was affected. Notwithstanding the foregoing, claims for damages by BellSouth, any BellSouth customer or any other person or entity shall not be subject to such limitation of liability when such claims result from the 1) gross negligence or willful misconduct (including intentional torts) of MCIm; or 2) MCIm's refusal to comply with the terms of this Agreement, provided that MCIm's actions or inactions, based upon a reasonable and good-faith interpretation of the terms of this Agreement, shall not be deemed a refusal to comply. In addition, nothing in this Section shall be interpreted to limit the remedies, if any, provided for in Attachment 10 of this Agreement.

11.2 Neither Party shall be liable for any act or omission of any other telecommunications company to the extent such other telecommunications company provides a portion of a service.

11.3 Neither Party shall be liable for damages to the other Party's terminal location, Interconnection Point or the other Party's customers' premises resulting from the furnishing of a service, including but not limited to the installation and removal of equipment and associated wiring, except to the extent the damage is caused by such Party's gross negligence or willful misconduct, or by a Party's failure properly to ground a local loop after disconnection using sound engineering principles.

11.4 The Party providing services under this Agreement, its Affiliates and its parent company shall be indemnified, defended and held harmless by the Party receiving such services against any claim, loss or damage arising from the receiving Party's use of the services provided under this Agreement, involving: 1) claims for libel, slander, invasion of privacy or copyright infringement arising from the content of the receiving Party's own communications; 2) any claim, loss, or damage claimed by the receiving Party's customer(s) arising from such customer's use of any service, including 911/E911, that the customer has obtained from the receiving Party and that the receiving Party has obtained from the supplying Party under this Agreement; or 3) all other claims arising out of an act or omission of the receiving Party in the course of using services provided pursuant to this Agreement. Notwithstanding the foregoing, to the extent that a claim, loss or damage is caused by the gross negligence or willful misconduct of a supplying Party the receiving Party shall have no obligation to indemnify, defend and hold harmless the supplying Party hereunder. Nothing herein is intended to modify or alter in any way the indemnification obligations set forth in Section 10, supra, relating to intellectual property infringement.

11.5 Neither Party guarantees or makes any warranty with respect to its services when used in an explosive atmosphere. Each Party shall be indemnified, defended and held harmless by the other Party or the other Party's customer from any and all claims by any person relating to the other Party or the other Party's customer's use of services so provided.

11.6 Promptly after receipt of notice of any claim or the commencement of any action for which a Party may seek indemnification pursuant to this Section, such Party (the "Indemnified Party") shall promptly give written notice to the other Party (the "Indemnifying Party") of such claim or action, but the failure to so notify the Indemnifying Party shall not relieve the Indemnifying Party of any liability it may have to the Indemnified Party except to the extent the Indemnifying Party has actually been prejudiced thereby. The Indemnifying Party shall be obligated to assume the defense of such claim, at its own expense. The Indemnified Party shall cooperate with the Indemnifying Party's reasonable requests for assistance or information relating to such claim, at the Indemnifying Party's expense. The Indemnified Party shall have the right to participate in the investigation and defense of such claim or action, with separate counsel chosen and paid for by the Indemnified Party. Unless the Indemnified Party chooses to waive its rights to be indemnified further in any claim or action, the Indemnified Party's counsel shall not interfere with the defense strategy chosen by the Indemnifying Party and its counsel, and the Indemnified Party's counsel shall not raise any claims, defenses, or objections or otherwise take a course of action in representation of the Indemnified Party when such course of action might be in conflict with a course of action or inaction chosen by the Indemnifying Party. The Indemnifying Party is not liable under this Section 11 for settlements or compromises by the Indemnified Party of any claim, demand, or lawsuit unless the Indemnifying Party has approved the settlement or compromise in advance or unless the Indemnified Party has tendered the defense of the claim, demand, or lawsuit to the Indemnifying Party in writing and the Indemnifying Party has failed to promptly undertake the defense.

11.7 Both Parties agree that they, at their own cost and expense, shall maintain throughout the term of this Agreement, all insurance required by law or required under this Agreement, and may at their own cost and expense purchase insurance or self-insure for their employer, public, professional and legal liabilities. No limit of liability on any policy, no program or self-insurance, nor any failure to maintain adequate insurance coverage shall limit the direct or indirect liability of either Party.

11.8 Insurance

11.8.1 Each Party shall, at its sole cost and expense, procure, maintain, and keep in force insurance as specified in this Article XI and underwritten by insurance companies licensed to do business in the

states applicable under this Attachment and having a Best's Insurance Rating of A-VIII.

11.8.2 Each Party shall maintain the following specific coverage:

11.8.2.1 Commercial General Liability coverage in the amount of ten million dollars ($10,000,000) or a combination of Commercial General Liability and Excess/Umbrella coverage totaling not less than ten million dollars ($10,000,000). The other Party shall be named as an Additional Insured on the Commercial General Liability policy(s) as specified herein.

11.8.2.2 Statutory Workers Compensation coverage and Employers Liability coverage in the amount of one hundred thousand dollars ($100,000) each accident, one hundred thousand dollars ($100,000) each employee by disease, and five hundred thousand dollars ($500,000) policy limit by disease.

11.8.2.3 MCIm shall maintain All Risk Property coverage on a full replacement cost basis insuring all of MCIm's real and personal property situated on or within BellSouth's Central Office location(s).

11.8.3. All policies purchased by either Party shall be deemed to be primary and not contributing to or in excess of any similar coverage purchased by the other Party. If either Party fails to maintain required coverage, the other Party may pay the premiums thereon and seek reimbursement of same from the Party failing to maintain required coverage. Required coverage must be effective upon execution of this Agreement.

11.8.4 Each Party shall submit certificates of insurance reflecting the coverage required pursuant to this Section within 30 days after execution of this Agreement. Failure to meet this interval may result in construction and equipment installation delays. Each Party shall arrange for the other Party to receive thirty (30) days' advance notice of cancellation from an insurance company. Each Party shall forward a certificate of insurance and notice of cancellation/non-renewal to the other Party at the following addresses:

For BellSouth:

BellSouth Telecommunications, Inc.
Attn: Risk Management Coordinator
675 W. Peachtree Street
Rm. 17H53

Atlanta, Georgia 30375

For MCIm:

To the general notice, provision in the Agreement.

11.8.5 For collocation, MCIm must conform to recommendations made by BellSouth's fire insurance company to the extent BellSouth has agreed to, or shall hereafter agree to, such recommendations. BellSouth shall provide MCIm with a list of all such recommendations when they are made.

11.8.6 Self-Insurance: If either Party's net worth exceeds five hundred million dollars ($500,000,000), such Party may elect to request self-insurance status in lieu of obtaining any of the insurance required in subsections 11.8.2.1, 11.8.2.2 and 11.8.2.3. Such Party shall provide audited financial statements to the other Party. The other Party shall then review such audited financial statements and respond in writing to the Party desiring to self-insure in the event that self-insurance status is not granted to such Party. If self-insurance is approved, the self-insuring Party shall annually furnish to the other Party, and keep current, evidence of such net worth that is attested to by one of the self-insuring Party's corporate officers. The ability to self-insure shall continue so long as the self-insuring Party meets all of the requirements of this Section. If the self-insuring Party subsequently no longer satisfies this Section, such Party is required to purchase insurance as indicated by subsections 11.8.2.1, 11.8.2.2 and 11.8.2.3.

11.8.7 The net worth requirements set forth in subsection 8.7 may be increased by the non-self-insuring Party from time to time during the term of this Attachment upon thirty (30) days notice to the self-insuring Party.

11.8.8 Failure to maintain the insurance required in this Section will be deemed a material breach of this Attachment.

Section 12. Continuing Obligations

12.1 BellSouth agrees that Interconnection must be provided in a competitively neutral fashion, at any technically feasible point within its network as stated in this Agreement and that such interconnection must contain all the same features, functions and capabilities, and be at least equal in quality to the level provided by BellSouth to itself, its Affiliates, and other telecommunications carriers.

12.2 BellSouth agrees that it shall provide to MCIm on a nondiscriminatory basis unbundled Network Elements and ancillary services as set forth in this

Agreement and the operations support systems as set forth in this Agreement. BellSouth further agrees that these services, or their functional components, must contain all the same features, functions and capabilities and be provided at a level of quality at least equal to the level which it provides to itself, its Affiliates, and other telecommunications carriers.

12.3. BellSouth agrees that it shall provide to MCIm nondiscriminatory access to, poles, ducts, conduits, and rights of way owned or controlled by BellSouth in accordance with the requirements of Section 224 of the Act.

12.4 The Parties shall provide, in a competitively neutral fashion, INP and LNP as set forth herein and in accordance with the applicable rules, regulations and orders of the FCC and this Commission.

12.5 BellSouth agrees that it shall provide to MCIm, in a competitively neutral fashion, dialing parity for local exchange service and interexchange service pursuant to the applicable rules, regulations and orders of the state regulatory body and the FCC in effect.

12.6 BellSouth agrees that order entry, provisioning, installation, trouble resolution, maintenance, billing, and service quality with respect to Local Resale must be provided at least as expeditiously as BellSouth provides for itself or for its own retail local service or to others, or to its Affiliates, and that it shall provide such services to MCIm in a competitively neutral fashion.

12.7 BellSouth agrees that it shall provide on a nondiscriminatory basis space on its premises for physical or virtual collocation, as MCIm may specify, for equipment necessary for MCIm's interconnection and access to unbundled network elements.

Section 13. Notices

Except as otherwise provided herein, all notices or other communication hereunder shall be deemed to have been duly given when made in writing and delivered in person by overnight courier, or deposited in the United States mail, certified mail, postage prepaid, return receipt requested and addressed as follows:

To MCIm: MCI WorldCom, Inc.
2520 Northwinds Parkway, 5th Floor
Alpharetta, GA 30004
Attn: Vice President, Eastern Telco Line Cost

Copy to: Vice President & Chief Network Counsel
WorldCom, Inc.
22001 Loudoun County Parkway, Bldg. E1-3-610
Ashburn, VA 20147

Carrier Agreements
MCI WorldCom, Inc.
2520 Northwinds Parkway, 5th Floor
Alpharetta, GA 30004

Commercial Counsel
MCI WorldCom, Inc.
2520 Northwinds Parkway, 5th Floor
Alpharetta, GA 30004

To BellSouth: AVP – MCIm Account Team
BellSouth Telecommunications, Inc.
1960 W. Exchange Pl., Ste. 402
Tucker, GA 30084

Copy to: General Attorney-Interconnection
BellSouth Telecommunications, Inc
Suite 4300
675 W. Peachtree Street, N.E.
Atlanta, Georgia 30375

If personal delivery or courier is selected to give notice, a receipt of such delivery shall be obtained. The address to which notices or communications may be given to either Party may be changed by written notice given by such Party to the other pursuant to this Section 13.

Section 14. Remedies

All rights of termination, cancellation or other remedies prescribed in this Agreement, or otherwise available, are cumulative and are not intended to be exclusive of other remedies to which the injured Party may be entitled at law or equity in case of any breach or threatened breach by the other Party of any provision of this Agreement. Use of one or more remedies shall not bar use of any other remedy for the purpose of enforcing the provisions of this Agreement.

Section 15. Waivers

15.1 No waiver of any provisions of this Agreement and no consent to any default under this Agreement shall be effective unless the same shall be in writing and properly executed by or on behalf of the Party against whom such waiver or consent is claimed.

15.2 No course of dealing or failure of any Party to strictly enforce any term, right, or condition of this Agreement in any instance shall be construed as a

general waiver or relinquishment of such term, right or condition.

15.3 Waiver by either Party of any default by the other Party shall not be deemed a waiver of any other default.

Section 16. Survival

The following provisions of this Part A shall survive the expiration or termination of this Agreement: Sections 10, 11, 19, 20, 24 and 25, and any other obligations expressly required to be performed after the expiration or termination of the Agreement.

Section 17. Force Majeure

Neither Party shall be held liable for any delay or failure in performance of any part of this Agreement from any cause beyond its control and without its fault or negligence, such as acts of God, acts of civil or military authority, embargoes, epidemics, war, terrorist acts, riots, insurrections, fires, explosions, earthquakes, strikes, nuclear accidents, floods, power blackouts, or unusually severe weather. In the event of any such excused delay in the performance of a Party's obligations(s) under this Agreement, the due date for the performance of the original obligation(s) shall be extended by a term equal to the time lost by reason of delay. In the event of such delay, the delaying Party shall perform its obligations at a performance level no less than that which it uses for its own operations and shall resume performance in a nondiscriminatory manner.

Section 18. Posting of Agreements

By October 31, 2001, BellSouth shall develop the capability to post on its web site any BellSouth interconnection agreement between BellSouth and any third party, and shall post such agreements no later than five days after the approval of such agreement with the Commission.

Section 19. Termination

19.1 In the event of breach of any material provision of this Agreement by either Party, the non-breaching Party shall give the other Party written notice thereof, and:

19.1.1 If such material breach is for non-payment of amounts due hereunder pursuant to Attachment 8, the breaching Party shall cure such breach within thirty (30) days of receiving such notice. The non-breaching Party shall be entitled to pursue all available legal and equitable remedies for such breach. Amounts disputed in good faith and withheld shall not be deemed "amounts due hereunder" for the purpose of this provision.

19.1.2 If such material breach is for any failure to perform in accordance

with this Agreement, which adversely affects the non-breaching Party's customers, the non-breaching Party shall give notice of the breach and the breaching Party shall cure such breach to the non-breaching Party's reasonable satisfaction within ten (10) business days, and if the breaching Party does not, the non-breaching Party may, at its sole option, terminate this Agreement, or any parts hereof. The non-breaching Party shall be entitled to pursue all available legal and equitable remedies for such breach. Notice under this subsection 19.1.2 may be given electronically or by facsimile and in such case shall be deemed received when sent.

19.1.3 If such material breach is for any other failure to perform in accordance with this Agreement, the breaching Party shall cure such breach to the non-breaching Party's reasonable satisfaction within forty-five (45) days, and if it does not, the non-breaching Party may, at is sole option terminate this Agreement, or any parts hereof. The non-breaching Party shall be entitled to pursue all available legal and equitable remedies for such breach.

19.2 MCIm may terminate any Services provided under this Agreement upon thirty (30) days written notice to BellSouth unless a different notice period or different conditions are specified for termination of such Services in this Agreement, or pursuant to any applicable tariff, in which event such specific period or conditions shall apply. Where there is no such different notice period or different condition specified, MCIm's liability shall be limited to payment of the amounts due for any terminated Service(s) provided up to and including the date of termination. Notwithstanding the foregoing, the provisions of Section 11, supra, shall still apply. Upon termination, BellSouth agrees to cooperate in an orderly and efficient transition to MCIm or another vendor such that the level and quality of the Services is not degraded and to exercise its best efforts to effect an orderly and efficient transition. MCIm agrees that it may not terminate the entire Agreement pursuant to this Section.

Section 20. Confidentiality and Publicity

20.1 All confidential or proprietary information disclosed by either Party during the negotiations and the term of this Agreement shall be protected by the Parties in accordance with the terms of this Section 20. All information which is disclosed by one Party ("Disclosing Party") to the other ("Recipient") in connection with this Agreement, or acquired in the course of performance of this Agreement, shall be deemed confidential and proprietary to the Disclosing Party and subject to this Agreement, such information including but not limited to, network, financial, marketing, and staffing information, proposals, requests for proposals, business plans, strategic information, specifications, costs, procedures, processes, business systems, software programs, orders for services, customer account data, call detail records, usage information in any

form, and Customer Proprietary Network Information ("CPNI") as that term is defined by the Act and the rules and regulations of the FCC (collectively, Disclosing Party's "Confidential Information").

20.1.1 Recipient shall (i) use Confidential Information only for the purpose of performing under this Agreement, (ii) hold Confidential Information in confidence and disclose it only to employees who have a need to know it in order to perform under this Agreement, and (iii) safeguard Confidential Information from unauthorized use or disclosure using no less than the degree of care with which Recipient safeguards its own Confidential Information. If Recipient wishes to disclose the Disclosing Party's Confidential Information to a third party agent or consultant in order to perform Recipient's obligations hereunder, such third party shall have executed a written agreement comparable in scope to the terms of this Section 20.

20.1.1.1 Notwithstanding the provisions of subsection 20.1.1, under no circumstances will BellSouth disclose MCIm's Confidential Information to, or permit access to MCIm's Confidential Information by, the retail operations or any employee thereof, or the retail customer representatives of, BellSouth or any BellSouth Affiliate, or any independent contractors to any of the foregoing, and BellSouth and any BellSouth Affiliate shall take all reasonable actions to protect MCIm's Confidential Information. In the event that the retail operations, any employees thereof, or retail customer representatives of BellSouth or any BellSouth Affiliate, or any independent contractors to any of the foregoing, possess or have knowledge of any MCIm Confidential Information, MCIm bears the burden of showing that the actions taken by BellSouth to protect the Confidential Information were not reasonable.

20.1.2 Recipient shall have no obligation to safeguard Confidential Information (i) which was in the Recipient's possession free of restriction prior to its receipt from Disclosing Party, (ii) which becomes publicly known or available through no breach of this Agreement by Recipient, (iii) which is lawfully acquired by Recipient free of restrictions on its disclosure, (iv) which is independently developed by personnel of Recipient to whom the Disclosing Party's Confidential Information had not been previously disclosed, or (v) which Disclosing Party in writing authorizes Recipient to disclose without restriction. Recipient may disclose Confidential Information if required by law, a court, or

governmental agency, provided that Disclosing Party has been notified of the requirement promptly after Recipient becomes aware of the requirement, and provided that Recipient undertakes all lawful measures to avoid disclosing such information until Disclosing Party has had reasonable time to obtain a protective order. Recipient agrees to comply with any protective order that covers the Confidential Information to be disclosed.

20.1.3 Each Party agrees that Disclosing Party would be irreparably injured by a breach of this Section 20 by Recipient or its representatives and that Disclosing Party shall be entitled to seek equitable relief, including injunctive relief and specific performance, in the event of any breach of this Section 20. Such remedies shall not be exclusive, but shall be in addition to all other remedies available at law or in equity.

20.2 CPNI related to MCIm's customers obtained by virtue of Local Interconnection or any other Service provided under this Agreement shall be MCIm's Confidential Information and may not be used by BellSouth for any purpose except performance of its obligations under this Agreement, and in connection with such performance, shall be disclosed only to employees with a need to know, unless the MCIm customer expressly directs MCIm to disclose such information to BellSouth pursuant to the requirements of Section 222(c)(2) of the Act. In the event such authorization is obtained, BellSouth may use or disclose only such information as MCIm provides pursuant to such authorization and may not use information that BellSouth has otherwise obtained, directly or indirectly, in connection with its performance under this Agreement. CPNI related to BellSouth's customers obtained by virtue of Local Interconnection or any other Service provided under this Agreement shall be BellSouth's Confidential Information and may not be used by MCIm for any purpose except performance of its obligations under this Agreement, and in connection with such performance shall be disclosed only to employees with a need to know, unless the BellSouth customer expressly directs BellSouth to disclose such information to MCIm pursuant to the requirements of Section 222(c)(2) of the Act. In the event such authorization is obtained, MCIm may use or disclose only such information as BellSouth provides pursuant to such authorization and may not use information that MCIm has otherwise obtained, directly or indirectly, in connection with its performance under this Agreement.

20.3 Unless otherwise mutually agreed upon, neither Party shall publish or use the other Party's logo, trademark, service mark, name, language, pictures, or symbols or words from which the other Party's name may reasonably be inferred or implied in any product, service, advertisement, promotion, or in connection with any sales or marketing activity or any other publicity matter.

20.4 Neither Party shall produce, publish or distribute any press release or other publicity referring to the other Party or its Affiliates, or announcing the

execution or discussing the terms of this Agreement without prior notice to the other Party. In no event shall either Party mischaracterize the contents of this Agreement in any public statement or in any representation to a governmental entity or member thereof.

20.5 Except as otherwise expressly provided in this Section 20, nothing herein shall be construed as limiting the rights of either Party with respect to its customer information under any applicable law, including without limitation Section 222 of the Act.

20.6 The Parties' rights and obligations under this Section 20 shall survive and continue in effect until four (4) years after the expiration or termination date of this Agreement with regard to all Confidential Information exchanged during the term of this Agreement. Thereafter, the parties' rights and obligations hereunder survive and continue in effect with respect to any Information that is a trade secret under applicable law.

Section 21. Audits and Inspections

21.1 The following audit procedures shall apply.

21.1.1 Subject to reasonable security requirements and except as may be otherwise specifically provided in this Agreement, either Party may audit the other Party's books, records and other documents once in each Contract Year for the purpose of evaluating the accuracy of the other Party's billing and invoicing. The auditing party shall employ a mutually acceptable independent third party auditor for this purpose. Such audit shall take place at a time and place agreed on by the Parties no later than thirty (30) days after notice thereof to the Party being audited.

21.1.2 The Party being audited shall promptly correct any billing error that is revealed in an audit, including making refund of any overpayment by the other Party in the form of a credit on the invoice and charging for any underpayments for the first full billing cycle after the Parties have agreed upon the accuracy of the audit results. Any Disputes concerning audit results shall be resolved pursuant to the Dispute Resolution Procedures described in this Part A.

21.1.3 The Parties shall cooperate fully in any such audit, providing the independent auditors reasonable access to employees and books, records and other documents reasonably necessary to assess the accuracy of the audited Party's bills.

21.1.4 Either Party may audit books, records and documents of the other Party more than once during any Contract Year if the previous audit found previously uncorrected net variances or errors in invoices in the auditing Party's favor with an aggregate value of at least ten percent

(10%) of the amounts payable by the other Party for Services provided during the period covered by the audit.

21.1.5 Audits shall be at the auditing Party's expense, subject to reimbursement by the other Party in the event that an audit finds an adjustment in the charges or in any invoice paid or payable by the auditing Party hereunder by an amount that is, on an annualized basis, greater than ten percent (10%) of the aggregate charges for the Services during the period covered by the audit.

21.1.6 Upon (i) the discovery by the audited Party of overcharges not previously reimbursed to the auditing Party or (ii) the resolution of disputed audits, the audited Party shall promptly reimburse the other Party the amount of any overpayment with interest at the rate set forth in Attachment 8. In no event, however, shall interest be assessed on any previously assessed or accrued late payment charges.

21.2 The following shall apply to usage audits for call transport and termination:

21.2.1 Percent Local Usage. Each Party will report to the other a Percentage Local Usage ("PLU"). For purposes of developing the PLU, each Party shall consider every local call and every long distance call; provided, however, that the Parties may exclude transit traffic from the PLU calculation. To the extent either Party includes transit traffic in the total number of calls, such transit traffic will be subtracted from the total before such Party calculates or determines the PLU factor. BellSouth and MCIm shall provide a positive report by the first of January, April, July and October of each year updating the PLU. The originating Party shall use calling party number information, where available, to determine PLUs. Where calling party number information is not available, the originating Party shall use its best efforts to estimate an accurate PLU. Where the terminating Party has message recording technology that can be used to correctly identify the jurisdiction of traffic terminated as defined in this Agreement, such information, in lieu of the PLU factor, shall, at the terminating Party's option, be utilized by the terminating Party to determine the appropriate local usage compensation to be paid. If a terminating Party elects to use its terminating recording technology information in lieu of originating Party self-reported factors, and the originating Party disputes the information used by the terminating Party, the originating Party shall provide the terminating Party with the originating Party's documentation in support of the originating Party's factors. If the Parties are still unable to resolve the matter, the Parties may pursue the dispute resolution procedures of this Agreement.

21.2.2 Percent Interstate Usage. For combined interstate and intrastate traffic carried over the same trunk groups, each Party will be required to provide a projected Percentage Interstate Usage ("PIU") to the other Party. All jurisdictional report requirements, rules and regulations for Interexchange Carriers specified in BellSouth's Intrastate Access Services Tariff will apply. After interstate and intrastate traffic percentages have been determined by use of PIU procedures, the PLU factor will be used for application and billing of local interconnection. Where the terminating Party has message recording technology that can be used to correctly identify the jurisdiction of traffic terminated as defined in this Agreement, such information, in lieu of the PIU and PLU factors, shall, at the terminating Party's option, be utilized by the terminating Party to determine the appropriate local usage compensation to be paid. If a terminating Party elects to use its terminating recording technology information in lieu of originating Party self-reported factors, and the originating Party disputes the information used by the terminating Party, the originating Party shall provide the terminating Party with the originating Party's documentation in support of the originating Party's factors. If the Parties are still unable to resolve the matter, the Parties may pursue the dispute resolution procedures of this Agreement.

21.2.3 Subject to reasonable security requirements and at the expense of the auditing Party, either Party may audit the books, records and other documents, including but not limited to PIU and PLU reports, of the other Party for the purpose of evaluating usage pertaining to transport and termination of local traffic. The Parties shall retain records of call detail for a minimum of nine months from which usage audits, including a PIU and PLU, can be ascertained. Either Party may request an audit for such purpose once each Contract Year. The auditing party shall employ a mutually acceptable independent third party auditor for this purpose. Any such audit shall take place at a time and place agreed on by the Parties no later than thirty (30) days after notice thereof to the Party being audited.

21.2.4 The Parties shall promptly correct any reported usage error that is revealed in an audit, including making payment of any underpayment and refunding any overpayment after the Parties have agreed upon the accuracy of the audit results. Such adjustments shall apply to usage for the calendar quarter in which the audit is completed, the quarter prior to completion of the audit, and two quarters following completion of the audit. Any Disputes concerning audit results shall be resolved pursuant to the Dispute Resolution procedures described in Section 22 of this Part A.

21.2.5 The Parties shall cooperate fully in any such usage audit, providing reasonable access to any and all appropriate employees and books, records and other documents reasonably necessary to assess the usage pertaining to transport and terminating of local traffic. If, as a result of an audit, either Party is found to have misstated the PLU or PIU or otherwise incorrectly reported the jurisdiction of traffic by twenty percentage points (20%) or more, to the detriment of the auditing Party, that Party shall reimburse the auditing Party for the cost of the audit.

21.3 For all audits conducted pursuant to this Section, the audited Party shall provide the auditing Party general office facilities, including, but not limited to, office space, telephones and fax machines for local and toll free calling, photocopying machines, and basic facilities such as restrooms and drinking water.

21.4 This Section 21 shall survive expiration or termination of this Agreement for a period of two (2) years.

Section 22. Dispute Resolution Procedures

22.1 The Parties recognize and agree that the Commission has continuing jurisdiction to enforce all terms and conditions of this Agreement. Accordingly, the Parties agree that any dispute arising out of or relating to this Agreement that the Parties themselves cannot resolve, may be submitted to the Commission for resolution. Either Party may seek expedited resolution by the Commission. If the Commission appoints an expert(s) or other facilitator(s) to assist in its decision-making, each Party shall pay half of the fees and expenses so incurred. During the Commission proceeding each Party shall continue to perform its obligations under this Agreement; provided, however that neither Party shall be required to act in any unlawful fashion. This provision shall not preclude the Parties from seeking relief available in any other forum.

Section 23. Bona Fide Request Process for Services

23.1 BellSouth shall, upon request of MCIm, and to the extent technically feasible, provide to MCIm access to its Services for the provision of MCIm's Telecommunications Service. Any request by MCIm for access to a Service that is not already available shall be treated as a Bona Fide Request. The Parties shall adhere to the process as agreed and described in Exhibit 1 to these General Terms and Conditions.

Section 24. Taxes

24.1 Definition

For purposes of this Section 24, the terms "taxes" and “fees" shall include but

not be limited to federal, state or local sales, use, excise, gross receipts or other taxes or tax-like fees of whatever nature and however designated (including tariff surcharges and any fees, charges or other payments, contractual or otherwise, for the use of public streets or rights of way, whether designated as franchise fees or otherwise) imposed, or sought to be imposed, on either of the Parties with respect to the services furnished hereunder or measured by the charges or payments therefor, excluding any taxes levied on income.

24.2 Taxes And Fees Imposed Directly On Either Providing Party Or Purchasing Party

24.2.1 Taxes and fees imposed on the providing Party, which are neither permitted nor required to be passed on by the providing Party to its Customer, shall be borne and paid by the providing Party.

24.2.2 Taxes and fees imposed on the purchasing Party, which are not required to be collected and/or remitted by the providing Party, shall be borne and paid by the purchasing Party.

24.3 Taxes And Fees Imposed On Purchasing Party But Collected And Remitted By Providing Party

24.3.1 Taxes and fees imposed on the purchasing Party shall be borne by the purchasing Party, even if the obligation to collect and/or remit such taxes or fees is placed on the providing Party.

24.3.2 To the extent permitted by Applicable Law, any such taxes and/or fees shall be shown as separate items on applicable billing documents between the Parties. Notwithstanding the foregoing, the purchasing Party shall remain liable for any such taxes and fees regardless of whether they are actually billed by the providing Party at the time that the respective service is billed.

24.3.3 If the purchasing Party determines that in its opinion any such taxes or fees are not lawfully due, the providing Party shall not bill such taxes or fees to the purchasing Party if the purchasing Party provides written certification, reasonably satisfactory to the providing Party, stating that it is exempt or otherwise not subject to the tax or fee, setting forth the basis therefor, and satisfying any other requirements under applicable law. If any authority seeks to collect any such tax or fee that the purchasing Party has determined and certified not to be lawfully due, or any such tax or fee that was not billed by the providing Party, the purchasing Party may contest the same in good faith, at its own expense. In the event that such contest must be pursued in the name of the providing Party, the providing Party shall permit the purchasing Party to pursue the contest in the name of providing Party. In the event of any

such contest, the purchasing Party shall furnish the providing Party with notice of the pending proceeding, copies of all filings in such proceeding, all correspondence between the purchasing Party and the taxing authority, the final resolution thereof and any action therein that would affect the providing Party's obligation to collect and remit.

24.3.4 In the event that all or any portion of an amount sought to be collected must be paid in order to contest the imposition of any such tax or fee, or to avoid the existence of a lien on the assets of the providing Party during the pendency of such contest, the purchasing Party shall be responsible for such payment and shall be entitled to the benefit of any refund or recovery.

24.3.5 If it is ultimately determined that any additional amount of such a tax or fee is due to the imposing authority, the purchasing Party shall pay such additional amount, including any interest and penalties thereon.

24.3.6 Notwithstanding any provision to the contrary, the purchasing Party shall protect, indemnify and hold harmless (and defend at the purchasing Party's expense) the providing Party from and against any such tax or fee, interest or penalties thereof, or other charges or payable expenses (including reasonable attorney fees) with respect thereto, which are reasonably and necessarily incurred by the providing Party in connection with any claim for or contest of any such tax or fee.

24.3.7 Each Party shall provide the other Party with timely written notice of any assessment, proposed assessment or other claim for any additional amount of such a tax or fee by a taxing authority.

24.4 Taxes And Fees Imposed On Providing Party

24.4.1 Taxes and fees imposed on the providing Party, which are permitted or required to be passed on by the providing Party to its Customer, shall be borne by the purchasing Party.

24.4.2 To the extent permitted by applicable law, any such taxes and/or fees shall be shown as separate items on applicable billing documents between the Parties. Notwithstanding the foregoing, the purchasing Party shall remain liable for any such taxes and fees regardless of whether they are actually billed by the providing Party at the time that the respective service is billed.

24.4.3 If the purchasing Party disagrees with the providing Party's determination as to the application or basis for any such tax or fees, the Parties shall consult with respect to the imposition and billing of such tax or fee. Notwithstanding the foregoing, the providing Party shall retain

responsibility for determining whether and to what extent any such taxes or fees are applicable and the purchasing Party shall abide by such determination and pay such taxes and fees to the providing Party. The providing Party shall further retain responsibility for determining whether and how to contest the imposition of such taxes or fees, provided, however, the Parties agree to consult in good faith as to such contest and that any such contest undertaken at the request of the purchasing Party shall be at the purchasing Party's expense. In the event that such contest must be pursued in the name of the providing Party, providing Party shall permit purchasing Party to pursue the contest in the name of the providing Party and the providing Party shall have the opportunity to participate fully in the preparation of such contest.

24.4.4 If, after consultation in accordance with the preceding subsection 24.4.3, the purchasing Party does not agree with the providing Party's final determination as to the application or basis of a particular tax or fee, and if the providing Party, after receipt of a written request by the purchasing Party to contest the imposition of such tax or fee with the imposing authority, fails or refuses to pursue such contest or to allow such contest by the purchasing Party, the purchasing Party may utilize the dispute resolution process outlined in Section 22 of the General Terms and Conditions of this Agreement. Utilization of the dispute resolution process shall not relieve the purchasing Party from liability for any tax or fee billed by the providing Party pursuant to this subsection during the pendency of such dispute resolution proceeding. In the event that the purchasing Party prevails in such dispute resolution proceeding, it shall be entitled to a refund in accordance with the final decision therein. Notwithstanding the foregoing, if at any time prior to a final decision in such dispute resolution proceeding the providing Party initiates a contest with the imposing authority with respect to any of the issues involved in such dispute resolution proceeding, the dispute resolution proceeding shall be dismissed as to such common issues and the final decision rendered in the contest with the imposing authority shall control as to such issues.

24.4.5 In the event that all or any portion of an amount sought to be collected must be paid in order to contest the imposition of any such tax or fee with the imposing authority, or to avoid the existence of a lien on the assets of the providing Party during the pendency of such contest, the purchasing Party shall be responsible for such payment and shall be entitled to the benefit of any refund or recovery.

24.4.6 If it is ultimately determined that any additional amount of such a tax or fee is due to the imposing authority, the purchasing Party shall pay such additional amount, including any interest and penalties thereon.

24.4.7 Notwithstanding any provision to the contrary, the purchasing Party shall protect, indemnify and hold harmless (and defend at the purchasing Party's expense) the providing Party from and against any such tax or fee, interest or penalties thereon, or other reasonable charges or payable expenses (including reasonable attorney fees) with respect thereto, which are incurred by the providing Party in connection with any claim for or contest of any such tax or fee.

24.4.8 Each Party shall provide the other Party with timely written notice of any assessment, proposed assessment or other claim for any additional amount of such a tax or fee by a taxing authority.

24.5 Mutual Cooperation

24.5.1 In any contest of a tax or fee by one Party, the other Party shall cooperate fully by providing records, testimony and such additional information or assistance as may reasonably be necessary to pursue the contest. Further, the other Party shall be reimbursed for any reasonable and necessary out-of-pocket copying and travel expenses incurred in assisting in such contest.

Section 25. Responsibility for Environmental Contamination

25.1 MCIm shall in no event be liable to BellSouth for any costs whatsoever resulting from the presence or Release of any environmental hazard that MCIm did not introduce to the affected Work Location so long as MCIm's actions do not cause or substantially contribute to the Release of any Environmental Hazard. BellSouth shall, at MCIm's request, indemnify, defend, and hold harmless MCIm, each of its officers, directors and employees from and against any losses, damages, claims, demands, suits, liabilities, fines, penalties and expenses (including reasonable attorneys fees) that arise out of or from (i) any environmental hazard that BellSouth, its contractors or agents introduce to the Work Locations or (ii) the presence or Release of any environmental hazard for which BellSouth is responsible under Applicable Law, to the extent the Release of any Environmental Hazard is not caused or substantially contributed to by MCIm's actions.

25.2 BellSouth shall in no event be liable to MCIm for any costs whatsoever resulting from the presence or Release of any environmental hazard that BellSouth did not introduce to the affected Work Location, so long as BellSouth’s actions do not cause or substantially contribute to the Release of any Environmental Hazards. MCIm shall, at BellSouth’s request, indemnify, defend, and hold harmless BellSouth, each of its officers, directors and employees from and against any losses, damages, claims, demands, suits, liabilities, fines, penalties and expenses (including reasonable attorneys’ fees) that arise out of or result from (i) any environmental hazard that MCIm, its contractors or agents introduce to the Work Locations, or (ii) the presence or

Release of any environmental hazard for which MCIm is responsible under applicable law to the extent the Release of any Environmental Hazard is not caused or substantially contributed to by BellSouth's actions.

Section 26. Amendments and Modifications

26.1 No provision of this Agreement shall be deemed waived, amended or modified by either Party unless such a waiver, amendment or modification is in writing, dated, and signed by both Parties.

Section 27. Severability

27.1 Subject to Section 2 - Regulatory Approvals, if any part of this Agreement is held to be invalid for any reason, such invalidity will affect only the portion of this Agreement which is invalid. In all other respects this Agreement will stand as if such invalid provision had not been a part thereof, and the remainder of the Agreement shall remain in full force and effect.

Section 28. Headings Not Controlling

28.1 The headings and numbering of Sections, Parts and Attachments in this Agreement are for convenience only and shall not be construed to define or limit any of the terms herein or affect the meaning or interpretation of this Agreement.

Section 29. Entire Agreement

29.1 This Agreement, including all Parts and Attachments and subordinate documents attached hereto or referenced herein, all of which are hereby incorporated by reference herein, constitute the entire matter thereof, and supersede all prior oral or written agreements, representations, statements, negotiations, understandings, proposals, and undertakings with respect to the subject matter thereof.

Section 30. Counterparts

30.1 This Agreement may be executed in counterparts. Each counterpart shall be considered an original, and such counterparts, shall together constitute one and the same instrument.

Section 31. Successors and Assigns

31.1 This Agreement shall be binding upon, and inure to the benefit of, the Parties hereto and their respective successors and permitted assigns.

Section 32. Construction

32.1 Unless the context clearly indicates otherwise, words described in this Section 32 should be construed to have the meanings given here. The word "shall" is used in this Agreement to mean, "has a duty to." The word "may" is used in this Agreement to mean, "is permitted to." The word "will" is used in this Agreement to denote a future event. The word "must" is used in this Agreement to denote a required characteristic of an inanimate or intangible object.

Section 33 Revenue Protection

33.1 BellSouth shall make available to MCIm all present and future fraud prevention or revenue protection features, including prevention, detection, or control functionality embedded within any of the Network Elements. To the extent separate charges apply for such features, the charges will be as set forth in Attachment 1 to this Agreement.

Section 34 Law Enforcement Interface

34.1 BellSouth shall provide seven days per week/24 hours per day (i) installation and information retrieval pertaining to traps, (ii) assistance involving emergency traces and (iii) information retrieval on Customer invoked CLASS services, including, but not limited to, call traces requested by MCIm. BellSouth shall provide all necessary assistance to facilitate the execution of wiretap or dialed number recorder orders from law enforcement authorities.

Section 35. Subpoenas and Court Orders

35.1 For MCIm resold services and where BellSouth provides local switching to MCIm, BellSouth will respond to subpoenas and court ordered requests delivered directly to BellSouth for the purpose of providing call detail records when the targeted telephone numbers belong to MCIm end users. Billing for such requests will be generated by BellSouth and directed to the law enforcement agency initiating the request. MCIm agrees that in cases where MCIm receives subpoenas or court ordered requests for call detail records for targeted telephone numbers belonging to MCIm end users, MCIm will advise the law enforcement agency initiating the request to redirect the subpoena or court ordered request to BellSouth. Billing for call detail information will be generated by BellSouth and directed to the law enforcement agency initiating the request. In cases where the timing of the response to the law enforcement agency prohibits MCIm from having the subpoena or court ordered request redirected to BellSouth by the law enforcement agency, MCIm will furnish the official request to BellSouth for providing the call detail information. BellSouth will provide the call detail records to MCIm and bill MCIm for the information. MCIm agrees to reimburse BellSouth for the call detail information provided. BellSouth will redirect subpoenas and court ordered requests for MCIm end user and/or other customer information to MCIm when BellSouth does not have the information requested.

36. Description of Days.

36.1 Unless otherwise indicated, all time periods described in days shall refer to calendar days.

IN WITNESS WHEREOF, each of the Parties has caused this Agreement to be executed by its duly authorized representatives.

MCI WorldCom Communications, Inc.	BellSouth Telecommunications, Inc.
By:_____	By:_____
Name:_____	Name:_____
Title:_____	Title:_____
Date:_____	Date:_____

EXHIBIT 1

BONA FIDE REQUEST PROCESS

1.0 Bona Fide Requests are to be used when MCIm requests a change to any Services and Elements provided hereunder, including features, capabilities, or functionality.

1.1 A Bona Fide Request shall be submitted in writing by MCIm and shall specifically identify the required service date, technical requirements, space requirements and/or such specifications that clearly define the request such that BellSouth has sufficient information to analyze and prepare a response. Such a request also shall include, MCIm's designation of the request as being (i) pursuant to the Telecommunications Act of 1996 or (ii) pursuant to the needs of the business.

1.2 Although not expected to do so, MCIm may cancel, without penalty, a Bona Fide Request in writing at any time. BellSouth shall then cease analysis of the request.

1.3 Within five (5) business days of its receipt, BellSouth shall acknowledge in writing, the receipt of the Bona Fide Request and identify a single point of contact and any additional information needed to process the request.

1.4 Except under extraordinary circumstances, within thirty (30) days of its receipt of a Bona Fide Request, BellSouth shall provide to MCIm a preliminary analysis of the Bona Fide Request. The preliminary analysis must include BellSouth's proposed price (plus or minus 25 percent) and state whether BellSouth can meet MCIm's requirements, the requested availability date, or, if BellSouth cannot meet such date, provide an alternative proposed date together with a detailed explanation as to why BellSouth is not able to meet MCIm's requested availability date. BellSouth also shall indicate in this analysis its agreement or disagreement with MCIm's designation of the request as being pursuant to the Act or pursuant to the needs of the business. If BellSouth does not agree with MCIm's designation, it may utilize the Dispute Resolution Process provided in this Agreement. In no event, however, shall any such dispute delay BellSouth's processing of the request. If BellSouth determines that it is not able to provide MCIm with a preliminary analysis within thirty (30) days of BellSouth's receipt of a Bone Fide Need request, BellSouth shall inform MCIm as soon as practicable. MCIm and BellSouth shall then determine a mutually agreeable date for receipt of the preliminary analysis.

1.5 As soon as possible, but in no event more than ninety (90) days after receipt of the request, BellSouth shall provide MCIm with a firm Bona Fide Request quote which must include at a minimum, the firm availability date, the applicable rates and the installation intervals, and a binding price quote.

1.6 Unless MCIm agrees otherwise, all proposed prices shall be the pricing principles

of this Agreement, in accordance with the Act, and any applicable FCC and Commission rules and regulations. Payments for services, purchased under a Bona Fide Request must be made as specified in this Agreement, unless otherwise agreed to by MCIm.

1.7 Within thirty (30) days after receiving the firm Bona Fide Request quote from BellSouth, MCIm shall notify BellSouth in writing of its acceptance or rejection of BellSouth's proposal. If at any time an agreement cannot be reached as to the terms and conditions or price of the request, or if BellSouth responds that it cannot or will not offer the requested item in the Bone Fide Request and MCIm deems the item essential to its business operations, and deems BellSouth's position to be inconsistent with the Act, FCC or Commission regulations and/or the requirements of this Agreement, the Dispute Resolution Process set forth in this Agreement may be used by either Party to reach a resolution.

PART B -- DEFINITIONS

For purposes of this Agreement, certain terms have been defined here and elsewhere in this Agreement to encompass meanings that may differ from, or be in addition to, the normal connotation of the defined term. Unless the context clearly indicates otherwise, any term defined or used in the singular includes the plural, and any term defined or used in the masculine includes the feminine and the neutral, as applicable. A defined word intended to convey its special meaning is capitalized when used. Other terms that are capitalized, and not defined in this Agreement, have the meaning in the Act, unless the context clearly indicates otherwise. The definitions contained in this Part B are meant to accurately describe the meaning accorded the term as required by the Act and as used in this Agreement. In the event of any disagreement between a definition of a term set forth in the Act and in this Agreement (including the Attachments and Appendixes), the definition set forth in the Act takes precedence. In the event of any disagreement between any specific definition of a term set forth in an Attachment or Appendix and in this Part B, the definition set forth in the Attachment or Appendix takes precedence.

1. “ACCESS SERVICE REQUEST” or “ASR” means the industry standard forms and supporting documentation used for ordering Switched Access Service. The ASR may also be used to order trunks and facilities for Local Interconnection.

2. “ACCESS TANDEM SWITCHES” are switches used to connect and switch traffic between End Office Switches, Interexchange Carriers, and other LEC switches.

3. “ACT” means the Communications Act of 1934, 47 U.S.C. 151 et seq., as amended, including the Telecommunications Act of 1996, and as interpreted from time to time in the duly authorized rules and regulations of the FCC or the Commission/Board.

4. “ADVANCED INTELLIGENT NETWORK” or “AIN” is a Telecommunications network architecture in which call processing, call routing and network management are provided by means of centralized databases.

5. “ADVANCED SERVICES” refers to high speed, switched, broadband, wireline telecommunications capability that enables users to originate and receive high-quality, voice, data, graphics or video telecommunications using any technology.

6. “AFFILIATE” is an entity that directly or indirectly owns or controls, is owned or controlled by, or is under common ownership or control with, another entity. For the purposes of this paragraph, “own” or “control” means to own an equity interest (or equivalent) of more than 10%.

7. “APPLICABLE LAW” means all laws including, but not limited to, the Act, the effective regulations, rules, and orders of the FCC and the Commission, and any

effective orders and decisions of a court of competent jurisdiction reviewing the regulations, rules, or orders of the FCC or the Commission.

8. "APPLICATION-TO-APPLICATION INTERFACE" means an electronic method of information exchange and interoperable transaction processing between a BellSouth OSS Function (a server) and MCIm's OSS application (another server). An Application-to-Application Interface requires only a single point of manual data entry, with the data transmitted and processed electronically via transaction sets between MCIm's and BellSouth's OSS applications. This is in contrast to a Graphic User Interface (GUI) web-browser where a CLEC provides data into BellSouth's OSS application (server) interface.

9. "APPOINTMENT DATE" or "DUE DATE" means the specific date on which the requested service is to be available to the Customer or to MCIM, as applicable.

10. "ATIS" or "ALLIANCE FOR TELECOMMUNICATIONS INDUSTRY SOLUTIONS" is a North American telecommunication industry standards forum which through its committees and working groups, creates, and publishes standards and guidelines designed to enable interoperability for telecommunications products and services.

11. "AUTOMATED MESSAGE ACCOUNTING" or "AMA" is the structure inherent in switch technology that initially records telecommunication message information. AMA format is contained in the AMA document, published by Telcordia as GR-1100-CORE which defines the industry standard for message recording.

12. "AUTOMATIC LOCATION IDENTIFICATION" or "ALI" is the automatic display at the Public Safety Answering Point ("PSAP") of the caller's telephone number, the address/location of the telephone and supplementary emergency services information.

13. "AUTOMATIC LOCATION IDENTIFICATION/DATABASE MANAGEMENT SYSTEM" or "ALI/DBMS" is an E911 database containing subscriber location information (including name, service address, telephone number, and sometimes special information from the local service provider) used to determine to which PSAP to route the call.

14. "AUTOMATIC NUMBER IDENTIFICATION" or "ANI" is a telephone number associated with the access line from which a call originates.

15. "AUTOMATIC ROUTE SELECTION" or "ARS" is a service feature that provides for automatic selection of the least expensive or most appropriate transmission facility for each call based on criteria programmed into a circuit switch routing table or system.

16. "BASIC 911" or "911" routes a call to one centralized PSAP answering location, with no ALI or ANI delivery.

17. "BILL DATE" means the date on which a bill is prepared.

18. "BILLING" involves the provision of appropriate usage data along with all other appropriate charges by one Telecommunications Carrier to another to facilitate Customer Billing with attendant acknowledgments and status reports, as needed. It also involves the exchange of information between Telecommunications Carriers to process claims and adjustments.

19. "BINDER GROUPS" means the sub-units of a cable, usually in groups of 25, 50 or 100 color-coded twisted pairs wrapped in colored tape within a cable.

20. "BRIDGE TAPS" means the currently unused sections of a twisted pair subtending the loop between the End User and the serving wire center or extending beyond the End User's location.

21. "BUSY LINE VERIFY/BUSY LINE VERIFY INTERRUPT" or "BLV/BLVI" means a service in which the caller requests an operator to confirm the busy status of a line, or requests an interruption of the call.

22. "CALLING PARTY NUMBER" or "CPN" is a Common Channel Signaling parameter which refers to the number transmitted through the network identifying the calling party.

23. "CARRIER" See Telecommunications Carrier.

24. "CARRIER ACCESS BILLING SYSTEM" or "CABS" is defined in a document prepared under the direction of the Billing Committee of the OBF. The CABS document is published by Telcordia in Volumes 1, 1A, 2, 3, 3A, 4 and 5 as Special Reports SR-OPT-001868, SR-OPT-0011869, SR-OPT-001871, SR-OPT-001872, SR-OPT-001873, SR-OPT-001874, and SR-OPT-001875, respectively, and contains the recommended guidelines for the Billing of Switched access service and other connectivity services.

25. "CENTRAL OFFICE SWITCH" or "CENTRAL OFFICE" means a switching facility where subscribers' lines are joined to switching equipment for connecting subscribers to each other, locally and long distance.

26. "CENTRALIZED AUTOMATIC MESSAGE ACCOUNTING" or "CAMA" trunks are trunks using MF signaling protocol used to record billing data.

27. "Centralized Message Distribution System" or "CMDS" means the national operation system that Local Exchange Carriers use to exchange EMI formatted data among host companies.

28. "CHARGE NUMBER" is a Common Channel Signaling parameter which refers to the number transmitted through the network identifying the billing number of the calling party. Charge Number frequently is not the CPN (Calling Party Number).

29. “CLC” or “CARRIER LIAISON COMMITTEE” is under the auspices of ATIS and is the executive oversight committee that provides direction as well as an appeals process to its subtending fora, the Network Interconnection Interoperability Forum (NIIF), the Ordering and Billing Forum (OBF), the Industry Numbering Committee (INC), and the Toll Fraud Prevention Committee (TFPC). On occasion, the CLC commissions ad hoc committees when issues do not have a logical home in one of the subtending forums. OBF and NIM publish business process rules for their respective areas of concern.

30. “COLLOCATION” refers to the right of MCIm to place certain equipment in BellSouth’s Premises for the purposes of Interconnection or access to unbundled Network Elements as specified in Attachment 5.

31. “COMMERCIAL MOBILE RADIO SERVICE” or “CMRS” is a mobile radio communication service, provided for profit, interconnected to the public switched network and available to the public or to such classes of eligible users as to be effectively available to a substantial portion of the public. Also sometimes referred to as wireless service, including cellular and PCS.

32. “COMMISSION” means the state regulatory body with jurisdiction over intrastate telecommunications.

33. “COMMON CHANNEL SIGNALING” or “CCS” means a method of exchanging call set-up and network control data over a digital signaling network fully separate from the Public Switched Network that carries the actual call.

34. “COMPETITIVE LOCAL EXCHANGE CARRIER” or “CLEC” is any Local Exchange Carrier certified to provide Local Exchange Telecommunications Service in any area where it is not an Incumbent Local Exchange Carrier.

35. “CONDUIT” is a tube or similar enclosure that may be used to house copper, fiber or coaxial communications cables or communications-related power cables. Conduit may be underground or above ground (for example, inside buildings) and may contain one or more inner ducts. An inner duct is a separate tube or enclosure within a Conduit.

36. “CONFIDENTIAL INFORMATION” has the meaning set forth in Part A of this Agreement.

37. “CONNECTIVITY BILL” means a bill for Connectivity Charges.

38. “CONNECTIVITY CHARGES” means those charges incurred by a Party as a result of purchasing services from the other Party under this Agreement.

39. “CONTRACT YEAR” means a twelve (12) month period during the term of the Agreement commencing on the Effective Date and each anniversary thereof.

40. "CONTROL OFFICE" is an exchange carrier operations center or office designated as its company’s single point of contact for the provisioning and maintenance of its portion of Interconnection arrangements.

41. “COORDINATED CUT-OVER” is the coordination of all cut-over activities that may be associated with porting of a telephone number from the Old Service Provider to the New Service Provider.

42. “CROSS CONNECTION” means a connection scheme between cabling runs, subsystems, and equipment using patch cords or jumpers of the appropriate bandwidth and medium that attach to connecting hardware on each end.

43. “CUSTOM CALLING FEATURES” comprise a group of special services provided via a Central Office Switch. Features include, but are not limited to, call waiting, 3-way calling, abbreviated dialing (speed calling), call forwarding, and AIN-type services.

44. “CUSTOM LOCAL AREA SIGNALING SERVICE” or “CLASS” is a set of call management service features consisting of number translation services, such as call forwarding and caller identification, available within a Local Access and Transport Area (“LATA”).

45. “CUSTOMER” is a Person to whom a Party provides or has agreed to provide a specific service or set of services. Customer includes Telecommunication Carriers.

46. “CUSTOMER PREMISES EQUIPMENT” or “CPE” is telecommunications equipment employed on the premises of an End User to originate, route or terminate Telecommunications (e.g., a telephone, PBX, modem pool, etc.).

47. "CUSTOMER USAGE DATA" means the Telecommunications Service usage data of an MCIm Customer, measured in minutes, sub-minute increments, message units or otherwise, that is recorded by BellSouth AMA equipment and forwarded to MCIm.

48. “DARK FIBER” is as defined in Attachment 3 of this Agreement.

49. “DATA COMMUNICATIONS CHANNEL” or “DCC” is a three-byte 192 Kbps portion of the SONET signal containing alarm, surveillance and performance information.

50. “DATABASE MANAGEMENT SYSTEM” or “DBMS” is a system of manual procedures and computer programs used to create, store, sort, manipulate and update the data required to provide Selective Routing and ALI.

51. “DEDICATED TRANSPORT” is as defined in Attachment 3 of this Agreement.

52. “DESIRED DUE DATE” means the desired service activation date as requested by MCIm on a service order.

53. “DIALING PARITY” means that a Person that is not an Affiliate of a Local Exchange Carrier is able to provide Telecommunications Services in such a manner that Customers have the ability to route automatically, without the use of any access code or dialing of extra digits, their Telecommunications to the Telecommunications Services provider of the Customer’s designation from among two or more Telecommunications Services providers.

54. “DIGITAL CROSS-CONNECT SYSTEM” or “DCS” is as described in Attachment 3 of this Agreement.

55. "DIGITAL SIGNAL LEVEL 0" or "DS0" means the 64 Kbps zero-level signal in the time-division multiplex hierarchy.

56. "DIGITAL SIGNAL LEVEL 1" or "DS1" means the 1.544 Mbps first-level signal in the time-division multiplex hierarchy. In the time-division multiplexing hierarchy of the telephone network, DS-1 is the initial level of multiplexing.

57. "DIGITAL SIGNAL LEVEL 3" or "DS3" means the 44.736 Mbps third-level in the time-division multiplex hierarchy. In the time-division multiplexing hierarchy of the telephone network, DS-3 is defined as the third level of multiplexing.

58. “ DIGITAL SUBSCRIBER LOOP” or “DSL” is as described in Attachment 3 of this Agreement.

59. “DIRECTORY ASSISTANCE DATABASE” refers to any BellSouth Database through which BellSouth provides live or automated operator-assisted Directory Assistance Service.

60. “DIRECTORY ASSISTANCE SERVICE” includes, but is not limited to, making available to customers, upon request, information contained in Directory Listings. Directory Assistance Service may include the option to complete the call at the Customer’s direction.

61. “DIRECTORY LISTINGS” are any information identifying the listed names of End Users of a Telecommunications Carrier and such End User’s telephone numbers, addresses or primary advertising classifications, or any combination of such listed names, numbers, addresses or classifications that the Telecommunications Carrier or Affiliate has provided or published, caused to be published, or accepted for publication in any directory format including, but not limited to, traditional

white/yellow page directories, specialty directories, CD ROM and other electronic formats.

62. “DISCLOSING PARTY” has the meaning set forth in of Part A of this Agreement.

63. “EFFECTIVE DATE” is the date indicated in Part A of this Agreement on which the Agreement shall become effective.

64. "ELECTRONIC BONDING" is a method of OSS Interoperability defined and approved by ATIS that can use GDMO data models and CMIP/CMISE for secure transport.

65. “ELECTRONIC FILE TRANSFER” means any system or process that utilizes an electronic format and protocol to send or receive data files.

66. “END OFFICE SWITCHES” are switches from which End Users’ Telephone Exchange Services are directly connected and offered.

67. “END USER” means a third party retail customer that subscribes to a Telecommunications Service provided by either of the Parties or by another Carrier.

68. “ENHANCED 911 SERVICE” or “E911” is a service provided to emergency telephone response agencies which includes network switching, database and CPE elements capable of providing Selective Routing, selective transfer, fixed transfer, ANI and ALI.

69. "ENVIRONMENTAL HAZARD" means any substance the presence, use, transport, abandonment or disposal of which (i) requires investigation, remediation, compensation, fine or penalty under any Applicable Law (including, but not limited to the following: the Comprehensive Environmental Response Compensation and Liability Act, Superfund Amendment and Reauthorization Act, Resource Conservation Recovery Act, the Occupational Safety and Health Act and provisions with similar purposes in applicable foreign, state and local jurisdictions) or (ii) poses risks to human health, or the environment (including, without limitation, indoor, outdoor or orbital space environments) and is regulated under any Applicable Law.

70. “EXCHANGE ACCESS” means the offering by a LEC of services or facilities to an IXC for the purpose of the origination or termination of Telephone Toll Services.

71. “EXCHANGE MESSAGE INTERFACE ” or “EMI” means the system used among ILECs for exchanging Telecommunications message information for billable, non-billable, sample, settlement and study data. EMI format is contained in BR-010-200-010 CRIS EMI, published by Bellcore and which defines the industry standard for EMIs.

72. "EXTENDED AREA SERVICE" or "EAS" is a type of telephone service (both optional and non-optional) defined in BellSouth tariffs whereby subscribers of a given exchange may complete calls to and, where provided by the tariff, receive messages from one or more exchanges without the application of long distance message telecommunications charges.

73. "FCC" means the Federal Communications Commission.

74. "FIBER MEET" is a joint Interconnection architecture method whereby the Parties physically interconnect their networks via an optical fiber interface (as opposed to an electrical interface) at a mutually agreed-upon location, at which one Party's facilities, provisioning, and maintenance responsibility begins and the other Party's responsibility ends (i.e., Point of Interconnection).

75. "FIRM ORDER CONFIRMATION" or "FOC" is as described in Attachment 8 of this Agreement.

76. "INFORMATION SERVICE" means the offering of a capability for generating, acquiring, storing, transforming, processing, retrieving, utilizing or making available information via Telecommunications, and includes electronic publishing, but does not include any use of any such capability for the management, control or operation of a Telecommunications system or the management of a Telecommunications Service.

77. "INTERIM NUMBER PORTABILITY" or INP is a method of number portability, such as Remote Call Forwarding ("RCF") as described in this Agreement.

78. "INTEGRATED SERVICES DIGITAL NETWORK" or "ISDN" refers to a digital circuit switched network service. Basic Rate ISDN provides for channelized (2 bearer and 1 data) end-to-end digital connectivity for the transmission of voice or data on either or both bearer channels and packet data on the data channel. Primary Rate ISDN provides for 23 bearer channels and 1 data channel. For BRI, the bearer channels operate at 64 Kbps and the data channel at 16 Kbps. For PRI, all 24 channels operate at 64 Kbps or 1.5 Mbps.

79. "INTERCONNECTION" is the linking of the BellSouth and MCIm networks for the mutual exchange of traffic as described in Attachment 4 of this Agreement.

80. "INTERCONNECTION ACTIVATION DATE" is the date that the construction of the Interconnection arrangement has been completed, and all necessary trunk groups have been established, tested and accepted by the Parties.

81. "INTERNET SERVICE PROVIDER" OR "ISP" means a provider of services offered over common carrier telecommunications facilities which employ computer processing applications, ISPs combine computer processing, information storage,

protocol conversion, and routing with transmission to enable users to access internet content and services. Internet Service Providers are a subset of Information Service Providers; either can be referred to as ISPs; both are a subset of Enhanced Service Providers (ESPs).

82. “LOCAL INTERCONNECTION TRUNKS/TRUNK GROUPS” is described in Attachment 4 of this Agreement.

83. “INTEREXCHANGE CARRIER” or “IXC” means a provider of interexchange Telecommunications Services.

84. “INTERLATA TRAFFIC” describes Telecommunications between a point located in a Local Access and Transport Area and a point located outside such area.

85. “INTRALATA TRAFFIC” describes Telecommunications between points located within a Local Access and Transport Area.

86. “INTRALATA TOLL TRAFFIC” describes IntraLATA Traffic outside the Local Calling Area or EAS of the originating Party.

87. “INTEROFFICE FACILITIES” or “INTEROFFICE TRANSPORT” include Dedicated Transport and Shared Transport, which are further defined in this Agreement.

88. "JOINT OPTICAL INTERCONNECTION" or (“JOI”) means an interconnection architecture method whereby the Parties physically interconnect their networks via an optical fiber interface (as opposed to an electrical interface) using a Synchronous Optical Network (“SONET”) Transmission System.

89. “LERG REASSIGNMENT” or “NXX REASSIGNMENT” means the reassignment of an entire NXX code shown in the LERG from one Carrier to another Carrier.

90. “LINE INFORMATION DATA BASE“ or “LIDB” is the database application that resides on a Service Control Point (SCP) that provides such functions as calling card validation for telephone line number cards and validation for collect and billed-to-third party services.

91. “LINE SIDE” refers to End Office Switch connections that have been programmed to treat the circuit as a local line connected to Customer Premise Equipment.

92. “ LOCAL NUMBER PORTABILITY” or “LNP” means the method of number portability that utilizes a Location Routing Number or LRN for providing called party routing information and that complies with the performance criteria set forth in 47 C.F.R. § 52.23(a).

93. “LOCAL ACCESS TRANSPORT AREA” or “LATA” is as defined in the Act.

94. "LOCAL CALLING AREA" is as defined by the Commission.

95. "LOCAL EXCHANGE CARRIER" or "LEC" is as defined in the Act.

96. "LOCAL EXCHANGE ROUTING GUIDE" or "LERG" is a Telcordia product that is sold to and used by LECs and IXCs to identify NPA-NXX routing and homing information as well as Network Element and equipment designations.

97. "LOCAL RESALE" is as described in Attachment 2 of this Agreement.

98. "LOCAL SERVICE ORDERING GUIDE" or "LSOG" is a document developed by the OBF as industry guidelines for ordering and billing processes.

99. "LOCAL SERVICE REQUEST" or "LSR" means the forms and supporting documentation used for ordering local services.

100. "LOCAL TRAFFIC" is as defined in Attachment 4 of this Agreement.

101. "LOOP CONCENTRATOR" is as described in Attachment 3 of this Agreement.

102. "LOOP" is as defined in Attachment 3 of this Agreement.

103. "LOCATION ROUTING NUMBER" or "LRN" means a unique 10-digit number assigned to a central office switch in a defined geographic area for call routing purposes. This 10-digit number serves as a network address and the routing information is stored in a database. Switches routing calls to subscribers whose telephone numbers are in portable NXXs perform a database query to obtain the location Routing Number that corresponds with the switch serving the dialed telephone number. Based on the Location Routing Number, the querying carrier then routes the call to the switch serving the ported number. The term "LRN" may also be used to refer to a method of LNP.

104. "MASTER STREET ADDRESS GUIDE" or "MSAG" is a database of street names and house number ranges within their associated communities defining particular geographic areas and their associated Emergency Service Numbers to enable proper routing of 911 calls.

105. "MEET POINT" is a point of Interconnection between two networks, designated by two Telecommunications Carriers, at which one carrier's responsibility for service begins and the other carrier's responsibility ends.

106 "MEET POINT BILLING" is described in Attachment 4 of this Agreement.

107. "MULTIPLE EXCHANGE CARRIER ACCESS BILLING" or "MECAB" means the document prepared by the Billing Committee of the Ordering and Billing Forum ("OBF"), which functions under the auspices of the Carrier Liaison Committee of the Alliance for

Telecommunications Industry Solutions ("ATIS") and by Telcordia (formerly BellCore) as Special Report SR-BDS-000983, Containing the recommended guidelines for the billing of Exchange Service access provided by two or more LECs and/or CLECs or by one LEC in two or more states within a single LATA.

108. "N-1 CARRIER" means the carrier in the call routing process immediately preceding the terminating carrier. The N-1 Carrier is responsible for performing the database queries (under the FCC's rules) to determine the LRN value for correctly routing a call to a ported number.

109. "NATIONAL EMERGENCY NUMBER ASSOCIATION" or "NENA" is an association which fosters the technological advancement, availability and implementation of 911 Service nationwide through research, planning, training, certification, technical assistance and legislative representation.

110. "NETWORK ELEMENT" means a facility or equipment used in the provision of a telecommunications service. Such term may include, but is not limited to, features, functions, and capabilities that are provided by means of such facility or equipment, including but not limited to, subscriber numbers, databases, signaling systems, and information sufficient for billing and collection or used in the transmission, routing, or other provision of a telecommunications service.

111. "NETWORK ELEMENT PLATFORM" or "UNE-P" means the Combination of a Loop, NID, Local Switching, Shared Transport, databases and signaling (e.g., LIDB), the vertical features resident in BellSouth's Central Office switch., and (at MCIm's option and where permitted) Operator Systems and Directory Assistance without separately ordering each element or disconnecting and reconnecting any aspect of a Customer's service.

112. "NETWORK INSTALLATION AND MAINTENANCE COMMITTEE" or "NIMC" is the ATIS/CLC sub-committee responsible for developing business process rules for maintenance and repair or trouble administration.

113. "NETWORK INTERFACE DEVICE" or "NID" is as described in Attachment 3 of this Agreement.

114. "NEW SERVICE PROVIDER" means the Party to which a subscriber switches its local exchange service or the Party to which a subscriber is porting its telephone number(s).

115. "911 DATABASE RECORDS" are the subscriber records to be provided by MCIm to BellSouth for inclusion in BellSouth's 911/E911 DBMS.

116. "911 SERVICE" means a three-digit universal telephone number (9-1-1) which gives the public direct access to a public safety agency.

117. “NORTH AMERICAN NUMBERING COUNCIL” or “NANC” is the federal advisory committee chartered by the FCC to analyze, advise, and make recommendations on numbering issues.

118. “NORTH AMERICAN NUMBERING PLAN” or “NANP” is the system of telephone numbering employed in the United States, Canada and certain Caribbean countries.

119. “NUMBER PORTABILITY” or “NP” means the ability of users of Telecommunications Services to retain, at the same location, existing Telecommunications numbers without impairment of quality, reliability or convenience when switching from one Telecommunications Carrier to another.

120. “NUMBER PORTABILITY ADMINISTRATION CENTER“ or “NPAC” is one of the regional number portability centers involved in the dissemination of data associated with ported numbers.

121. “NUMBERING PLAN AREA” or “NPA” is also sometimes referred to as an area code and the three digit indicator that is defined by the “A,” “B” and “C” digits of each 10-digit telephone number within the NANP. Each NPA contains 800 possible NXX Codes. There are two general categories of NPA. “Geographic NPA” is associated with a defined geographic area, and all telephone numbers bearing such NPA are associated with services provided within that Geographic area. A “Non-Geographic NPA," also known as a “Service Access Code” (SAC Code), is typically associated with a specialized Telecommunications Service which may be provided across multiple geographic NPA areas; 500, Toll Free Service NPAs, 700, and 900 are examples of Non-Geographic NPAs.

122. “NXX,” “NXX CODE,” “CENTRAL OFFICE CODE,” or “CO CODE” is the three digit switch entity indicator which is defined by the D, E and F digits of a 10 digit telephone number within the NANP.

123. “OPERATOR SERVICES” are any automatic or live assistance to a Customer to arrange for billing or completion of a telephone call including, but not limited to:

1) Operator assistance for call completion (e.g. collect calls).

2) Operator assistance for billing after the subscriber has dialed the called number (e.g. credit card calls).

3) Special services (e.g. BLV/BLVI, calls to Emergency Response Agencies, operator-assisted directory assistance services).

4) General assistance.

124. “ORDERING AND BILLING FORUM” or “OBF” means the forum, under the auspices of the Carrier Liaison Committee of the Alliance for Telecommunications Industry Solutions, concerned with inter-company ordering and billing.

125. “OLD SERVICE PROVIDER” means the Party from which a subscriber switches its local exchange service or the Party from which a subscriber is porting its telephone number(s).

126. “ORIGINATING LINE INFORMATION” or “OLI” is a CCS SS7 Feature Group D signaling parameter which refers to the number transmitted through the network identifying the billing number of the calling party.

127. “P.01 TRANSMISSION GRADE OF SERVICE” means a circuit switched trunk facility provisioning design standard with the statistical probability of no more than one call in 100 blocked on initial attempt during the average time-consistent busy hour.

128. “PACKET SWITCHING” is as defined in Attachment 3 of this Agreement.

129. “PARITY” is as defined for Local Resale in 47 CFR § 51.603; for unbundled Network Elements in 47 CFR § 51.311; and for Interconnection in 47 CFR § 51.305.

130. “PARTY” means either BellSouth or MCIm; “PARTIES” means both MCIm and BellSouth.

131. "PASSBAND" is a method for DSL implementation associated with ADSL where the systems generate two or more channels well above the voiceband that contain amplitude and phase modulated signals similar to those used by analog modems. Because data traffic is carried in the higher frequency channels, the lower portion of the spectrum is free to support voice service. Passband systems have a frequency whose lower limit is at a non-zero frequency and require a “splitter” at each end to separate the voice and data signals.

132. “PERFORMANCE STANDARD” has the meaning set forth in Attachment 10.

133. "PERSON" is a general term meaning an individual or association, corporation, firm, joint-stock company, organization, partnership, trust or any other form or kind of entity.

134. “POINT OF INTERCONNECTION” is described in Attachment 4.

135. “POLE ATTACHMENT” means the connection of a facility to a utility pole..

136. "PORT" or “PORT ELEMENT” means a termination point in the End Office Switch. For purposes of general illustration, a Port includes a line card and associated peripheral equipment on an End Office Switch which serves as the hardware termination for Line or Trunk Side facilities connected to the End Office switch. Each

Line Side Port is typically associated with one or more telephone numbers that serve as the Customer's network address.

137. ”POTS” means plain old telephone service.

138. “POWER SPECTRAL DENSITY (PSD) MASKS” are graphical templates that define the limits on signal power densities across a range of frequencies to permit divergent technologies to coexist in close proximity within the same Binder Groups.

139. “PREMISES” is as defined in Attachment 5 of this Agreement.

140. “PUBLIC SAFETY ANSWERING POINT” or “PSAP” is the public safety communications center where 911/E911 calls for a specific geographic area are answered.

141. “PUBLIC SWITCHED NETWORK” refers to the worldwide voice telephone network accessible to all those with telephones and access privileges.

142. “RATE CENTER” identifies the specific geographic point associated with one or more particular NPA-NXX codes which have been assigned to a LEC (or CLEC) for its provision of Telephone Exchange Services. The Rate Center is a geographic point identified by a tariffed vertical and horizontal (V&H) coordinate. Rate Center V&H coordinates are used in the toll message rating process to measure distances between Rate Centers.

143. "REAL TIME" means the actual time in which an event takes place, with the reporting on or the recording of the event practically simultaneous with its occurrence.

144. "RELEASE" means any release, spill, emission, leaking, pumping, injection, deposit, disposal, discharge, dispersal, leaching or migration, including without limitation, the movement of Environmental Hazards through or in the air, soil, surface water or groundwater, or any action or omission that causes Environmental Hazards to spread or become more toxic or more expensive to investigate or remediate.

145. “REMOTE CALL FORWARDING” or “RCF” is as described in Attachment 7 of this Agreement.

146. “REMOTE TERMINAL” or “RT” means a cabinet, vault or similar structure at an intermediate point between the End User and BellSouth’s Central Office, where Loops are aggregated and hauled to the Central Office or serving Wire Center.

147. “RESELLER” is a category of local exchange service providers who obtain dial tone and associated Telecommunications Services from another LEC through the purchase of wholesale priced Telecommunications Services for resale to their End User.

148. “RESERVED NUMBERS” means those telephone numbers which are not in use but which are held in reserve by a Carrier under a legally enforceable written agreement for a specific subscriber’s future use.

149. “SELECTIVE ROUTER” means the equipment necessary for Selective Routing.

150. “SELECTIVE ROUTING” is the automatic routing of E911 calls to the PSAP that has jurisdictional responsibility for the service address of the caller, irrespective of telephone company exchange or Wire Center boundaries. Selective Routing may also be used for other services.

151. “SERVICE CONTROL POINT” or “SCP” means a node in the CCS network to which information requests for service handling, such as routing, are directed and processed. The SCP is a real time database system that, based on a query from a Service Switching Point (SSP), performs subscriber or application-specific service logic and then sends instructions back to the SSP on how to continue call processing.

152. “SERVICE CREATION ENVIRONMENT” is a computer containing generic call processing software that can be programmed to create new Advanced Intelligent Network call processing services.

153. “SERVICE PROVIDER IDENTIFICATION” or “SPID” is the number that identifies a service provider to the relevant NPAC. The SPID may be a state-specific number.

154. “SERVICES”- As used in this agreement includes interconnection, local resale, ancillary services and the purchase of unbundled network elements (individually referred to as the “service" or collectively as the "services").

155. “SHARED (Common) TRANSPORT” is defined as transmission facilities shared by more than one carrier, including BellSouth, between end office switches, between end office switches and tandem switches and between tandem switches in the BellSouth network.

156. “SIGNALING LINK TRANSPORT” is a set of two or four dedicated 56 Kbps transmission paths between MCIm-designated Signaling Points of Interconnection (SPOI) that provides appropriate physical diversity and a cross connect at a BellSouth STP site.

157. “SIGNAL TRANSFER POINT” or “STP” performs a packet switching function that routes signaling messages among SSPs, SCPs, Signaling Points (SPs) and other STPs in order to set up calls and to query databases for Advanced Services.

158. “SIGNALING SYSTEM 7” or “SS7” is an out-of-band signaling protocol consisting of four basic sub-protocols:

a) Message Transfer Part ("MTP"), which provides functions for basic routing of signaling messages between signaling points.

b) Signaling Connection Control Part ("SCCP"), which provides additional routing and management functions for transfer of messages other than call setup between signaling points.

c) Integrated Services Digital Network User Part ("ISUP"), which provides for transfer of call setup signaling information between signaling points.

d) Transaction Capabilities Application Part ("TCAP"), which provides for transfer of non-circuit related information between signaling points.

159. "SONET RING" describes a network configuration in which networks are interconnected by unidirectional or bi-directional transmission links to form a closed path. The network elements utilized to provide this ring must be based on SONET standards.

160. "SPECTRUM COMPATIBILITY" means generally the ability of various loop technologies to reside and operate in close proximity while not significantly degrading each others' performance.

161. "SUBLOOP" is defined as portions of the loop that can be accessed at terminals in BellSouth's outside plant, including inside wire. An accessible terminal is any point on the loop where technicians can access the wire or fiber within the cable without removing a splice case to reach the wire or fiber within. Such points may include, but are not limited to, the pole or pedestal, the Network Interface Device, the minimum point of entry, the single point of Interconnection, the main distribution frame, the Remote Terminal, and the Feeder Distribution Interface.

162. "SWITCH" is a mechanical, electrical or electronic device which performs the functions of establishing and releasing connections between two (2) or more circuits, services or communications systems.

163. "SWITCHED ACCESS SERVICE" means the utilization of LEC facilities for the origination and/or termination of interexchange traffic.

164. "SWITCHED ACCESS TRAFFIC" means telephone calls requiring local exchange carrier transmission or switching services for the purpose of the origination or termination of telephone toll service.

165. "SYNCHRONOUS OPTICAL NETWORK" or "SONET" is a TDM-based (time division multiplexing) standard for high-speed fiber optic transmission formulated by the Exchange Carriers Standards Association ("ECSA") for the American National Standards Institute ("ANSI").

166. “TANDEM OFFICE SWITCHES” are switches that are used to connect and switch trunk circuits between and among LEC and IXC switches.

167. “TECHNICALLY FEASIBLE” is as defined in 47. CFR § 51.5.

168 “TELECOMMUNICATIONS” means the transmission, between or among points specified by the user, of information of the user’s choosing, without change in the form or content of the information as sent and received.

169. “TELECOMMUNICATIONS CARRIER” means any provider of Telecommunications Services, except aggregators of Telecommunications Services (as defined in Section 226 of the Act).

170. “TELECOMMUNICATIONS EQUIPMENT” means equipment, other than Customer Premises Equipment, used by a Carrier to provide Telecommunications Services, and includes software integral to such equipment, including upgrades.

171. “TELECOMMUNICATIONS SERVICE” means the offering of Telecommunications for a fee directly to the public, or to such classes of users as to be effectively available directly to the public, regardless of the facilities used.

172. “TELEPHONE EXCHANGE SERVICE” means a service within a telephone exchange, or within a connected system of telephone exchanges within the same exchange area operated to furnish to subscribers intercommunicating service of the character ordinarily furnished by a single exchange, and which is covered by the exchange service charge, or comparable service provided through a system of switches, transmission equipment or other facilities (or combinations thereof) by which a subscriber can originate and terminate a Telecommunications Service.

173. “TOLL FREE SERVICE” means service provided with any dialing sequence that invokes Toll Free, i.e., 800-like, Service processing.

174. “TRANSACTION SET” is a term used by ANSI X12 and elsewhere that denotes a collection of data, related field rules, format, structure, syntax, attributes, segments, elements, qualifiers, valid values that are required to initiate and process a business function from one trading partner to another. Some business functions, *e.g.*, pre-order inquiry and response are defined as complimentary transactions sets. For example, service address validation inquiry and service address validation response.

175. “TRANSIT TRAFFIC” is as described in Attachment 4 of this Agreement.

176. “TRUNK SIDE” refers to Central Office Switch connections that have been programmed to treat the circuit as connected to another switching entity (e.g., another Central Office Switch).

177. “VIRTUAL COLLOCATION” is an offering by BellSouth that enables MCIm to:

a) Designate or specify equipment to be used in accordance with Attachment 5 of this Agreement for Interconnection or access to unbundled Network Elements to be located within or upon BellSouth's Premises, and dedicated to MCIm.

b) Use such equipment to interconnect with BellSouth's network facilities for the transmission and routing of Telephone Exchange Service, Exchange Access Service, or both, or for access to BellSouth's unbundled Network Elements for the provision of a Telecommunications Service.

c) From a remote location, electronically monitor and control its communications channels terminating in such equipment.

178. "VOLUNTARY FEDERAL SUBSCRIBER FINANCIAL ASSISTANCE PROGRAMS" are Telecommunications Services provided to low-income subscribers, pursuant to requirements established by the appropriate state regulatory body.

179. "WASTE" means all hazardous and non-hazardous substances and materials which are intended to be discarded, scrapped or recycled, associated with activities MCIm or BellSouth or their respective contractors or agents perform at Work Locations. It shall be presumed that all substances or materials associated with such activities, that are not in use or incorporated into structures (including without limitation damaged components or tools, leftovers, containers, garbage, scrap, residues or by products), except for substances and materials that MCIm, BellSouth or their respective contractors or agents intend to use in their original form in connection with similar activities, are Waste. Waste shall not include substances, materials or components incorporated into structures (such as cable routes) even after such components or structure are no longer in current use.

180. "WIRE CENTER" denotes a building or space within a building which serves as an aggregation point on a given carrier's network, where transmission facilities and circuits are connected or switched. Wire Center can also denote a building in which one or more Central Offices, used for the provision of basic exchange services and Switched access service, are located.

181. "WORK LOCATIONS" means any real estate that MCIm or BellSouth, as appropriate, owns, leases or licenses, or in which it holds easements or other rights to use, or does use, where work is performed in connection with this Agreement.

TABLE OF CONTENTS

Attachment 1
PRICING

Section 1. General Principles 2

Section 2. Rates 3

Section 3: Right of Way Rates 5

ATTACHMENT 1

PRICING

Section 1. General Principles

1.1 All of the rates set forth in this Agreement shall remain in effect for the term of this Agreement unless they are changed in accordance with the provisions of this Agreement. For the purposes of this Attachment, “rates” may refer to either or both recurring and nonrecurring prices. BellSouth and MCIm agree to attempt in good faith to resolve any alleged errors or omissions in Table 1 of this Attachment.

1.2 Except as otherwise noted, all rates set forth in this Agreement are permanent rates. If the Commission subsequently orders a different rate, either party, upon written notice to the other party, may elect to change the rate set forth in this agreement to conform to the new rate ordered by the Commission. Upon written notice, the parties will negotiate an amendment to this Agreement reflecting the new rate.

1.3 If a rate is identified as interim, then upon adoption of a final rate by the Commission, either Party may elect to change the interim rate to conform to the final rate upon written notice to the other Party. If either Party elects to change an interim rate to conform to a final rate, the final rate will be substituted for the interim rate and will remain in effect for the remainder of this Agreement unless otherwise changed in accordance with the terms of this Agreement. Unless otherwise agreed to by the Parties, the interim rate shall be replaced by the final rate retroactive to the effective date of this Agreement, and will be trued up within thirty (30) days of the effective date of the amendment adopting the final rates.

1.4 Each rate set forth in this Agreement is the total rate applicable for the respective Service. Where required by Applicable Law, rates contained in this Attachment are based upon 47 C.F.R. § 51.505(b) and Commission approved pricing methodologies.

1.4.1 Rates not set forth in this Agreement, for Services required to be provided under the Telecommunications Act of 1996 and under applicable FCC regulations, will be negotiated by the Parties at the time they are requested. The providing Party shall provide the Service even if rate negotiations are incomplete, and the providing Party shall set an interim rate based on its good faith belief as to its costs, using required pricing methodologies. If interim rates are used, the requesting party shall pay

the providing Party the final negotiated or arbitrated rate, retroactive to the date the Services are first provided.

1.5 All of the rates set forth in this Agreement pertaining to Network Elements are appropriate for Network Elements on an individual, stand-alone basis. Recurring and nonrecurring rates for those Existing Combinations and Typical Combinations of Network Elements(as such terms are defined in Attachment 3 of this Agreement) enumerated in Table 1 of this Attachment 1 are as set forth in Table 1. On an interim basis, for Typical Combinations of loop and transport network facilities not specifically enumerated in Table 1, the non-recurring and recurring charges for such Typical Combinations shall be the sum of the stand-alone nonrecurring and recurring charges of the Network Elements which make up the Typical Combination. These interim rates shall be subject to true-up based on the Commission's review of BellSouth's cost studies. To the extent that MCIm seeks to obtain Typical Combinations that have not been specifically priced by the Commission when purchased in combined form, MCIm may purchase such Typical Combinations at the sum of the stand-alone prices of the UNEs which make up the combination. If MCIm is dissatisfied with using the sum of the stand-alone rates, MCIm may pursue the Bona Fide Request (BFR) process with BellSouth to seek a different rate.

Section 2. Rates

2.1 All rates set forth in this Agreement for Services required to be provided by the Act shall comply with the standards set forth by the Act and final and nonappealable orders of the FCC and the Commission. Such rates shall be just, reasonable, and nondiscriminatory and in accordance with the principles set forth in this Agreement.

2.2 BellSouth shall not charge MCIm different rates for Unbundled Network Elements based on the class of customers served by MCIm, or on the type of services provided by MCIm using those Unbundled Network Elements, unless otherwise ordered by the Commission.

2.3 Interim Rates. Rates contained in Attachment 1, Table 1 are as previously ordered by the Commission, agreed to by the parties or have not yet been addressed by the Commission. Rates, rate structure and elements proposed in Attachment 1, Table 1 that have not yet been ruled upon by the Commission are interim and subject to true-up upon future consideration by the Commission.

2.4 Resale. The recurring and nonrecurring rates pursuant to which MCIm is to purchase Telecommunications Services from BellSouth for resale shall be at a discount rate off of the retail rate for the Telecommunications Service. The discount rates shall be as set forth in Attachment 2. Such discount shall reflect

the costs avoided by BellSouth, using the avoided cost methodology set forth by the FCC, when selling a service for wholesale purposes.

2.5 Operational Support Systems.

2.5.1 LSRs submitted by means of one of the available electronic interfaces will incur the per LSR nonrecurring OSS electronic ordering charge associated with electronically ordered facilities as specified in Table 1 of this Attachment. Except as specified in Attachment 8, subsection 3.1.2, or in this section, LSRs submitted by means other than one of the available electronic interfaces (mail, fax, courier, etc.) will incur a nonrecurring manual ordering charge associated with manually ordered facilities as specified in Table 1 of this Attachment. An individual LSR will be identified for billing purposes by its Purchase Order Number (PON). Each LSR and all its supplements or clarifications issued, regardless of their number, will count as a single LSR for nonrecurring charge billing purposes. Nonrecurring charges will not be refunded for LSRs that are canceled by MCIm. BellSouth may only charge manual non-recurring ordering charges if it does not provide an electronic ordering process for its retail representatives. The Parties shall work together in the Commission's Improvement Task Force ordered in Docket No. 7892-U to increase electronic ordering and flow-through for all orderable services.

2.5.1.1 For resold Services, OSS charges apply in addition to the charges described in Exhibit A, Attachment 2.

2.5.1.2 MCIm may use an LSR to provide a list of Services to be denied or restored, but such requests for denial or restoration will be billed as one LSR per service address, regardless of how requests are submitted.

2.6 To the extent BellSouth makes available to itself, its customers, subsidiaries, Affiliates or any other third parties any volume or term discounts, BellSouth shall make such volume and term discounts available to MCIm at the same rates, terms and conditions.

Section 3: Right of Way Rates

2001 INTERIM FCC Formula Supported Fees
for attachments and/or company effective 1/1/2001
(Re-calculated annually)

ALL FEES ARE CONSIDERED AS 'INTERIM' EXCEPT THOSE UNDER JURISDICTION OF A STATE COMMISSION

Licensee shall pay to Licensor the following fees:

State	Poles *(ea. / yr.)*	Anchors *(ea. / yr.)*	Conduit	
				($ / ft. / yr.)
Tennessee	$6.19			$0.36

Conduit rates have been developed using the one-half (1/2) Duct convention for 2000. This rate will apply to each passageway (innerduct).

i) For the purpose of determining the Duct feet chargeable, the Duct considered occupied shall be measured from the center of adjacent Manhole(s), or from the center of a Manhole to the end of a Duct not terminated in a Manhole.

ii) The above rates are not applicable for crossings of any navigable waterway. Rates for navigable waterway crossings will be negotiated by the Parties on an individual case basis. If the Parties are unable to agree on rates, the Parties will establish such rates in accordance with this Attachment.

Pole Attachment Transfer Rate
Per Pole (throughout BellSouth region) $41.00

BellSouth/MCIm
TENNESSEE
Rates
For
Network Elements

CATEGORY	UNBUNDLED NETWORK ELEMENT	Interim	Zone	BCS	USOC	RATES ($) Rec	Nonrecurring First	Nonrecurring Add'l	Nonrecurring Disconnect First	Nonrecurring Disconnect Add'l	OSS RATES ($) Svc Order Submitted Elec per LSR SOMEC	Svc Order Submitted Manually per LSR SOMAN	Incremental Charge - Manual Svc Order vs. Electronic-1st SOMAN	Incremental Charge - Manual Svc Order vs. Electronic-Add'l SOMAN	Incremental Charge - Manual Svc Order vs. Electronic-Disc 1st SOMAN	Incremental Charge - Manual Svc Order vs. Electronic-Disc Add'l SOMAN
	The "Zone" shown in the sections for stand-alone loops or loops as part of a combination refers to Geographically Deaveraged UNE Zones. To view Geographically Deaveraged UNE Zone Designations by Central Office, refer to Internet Website: http://www.interconnection.bellsouth.com/become_a_clec/html/interconnection.htm															
UNBUNDLED EXCHANGE ACCESS LOOP																
	2-WIRE ANALOG VOICE GRADE LOOP															
	2-Wire Analog Voice Grade Loop - Service Level 1- Zone 1		1	UEANL	UEAL2	13.19	31.99	20.02	10.65	1.41			20.35	10.54	13.32	13.32
	2-Wire Analog Voice Grade Loop - Service Level 1- Zone 2		2	UEANL	UEAL2	17.23	31.99	20.02	10.65	1.41			20.35	10.54	13.32	13.32
	2-Wire Analog Voice Grade Loop - Service Level 1- Zone 3		3	UEANL	UEAL2	22.53	31.99	20.02	10.65	1.41			20.35	10.54	13.32	13.32
	Loop Testing - Basic 1st Half Hour	I		UEANL	URET1		78.92	78.92								
		I					23.33	23.33								
	2 Wire Analog Voice Grade Loop-Service Level 1-Line Splitting- Zone 1		1	UEPSR, UEPSB	UEALS	13.19	31.99	20.02	10.65	1.41			20.35	10.54	13.32	13.32
	2 Wire Analog Voice Grade Loop- Service Level 1-Line Splitting-Zone 2		2	UEPSR, UEPSB	UEALS	17.23	31.99	20.02	10.65	1.41			20.35	10.54	13.32	13.32
	2 Wire Analog Voice Grade Loop-Service Level 1-Line Splitting-Zone 3		3	UEPSR, UEPSB	UEALS	22.53	31.99	20.02	10.65	1.41			20.35	10.54	13.32	13.32
	Engineering Information Document (EI)	I		UEANL			28.80	28.80								
	Manual Order Coordination for UVL-SL1s (per loop)*			UEANL	UEAMC		36.46	36.46								
	Order Coordination for Specified Conversion Time for UVL-SL1 (per LSR) *			UEANL	OCOSL		36.52	36.52								
	2-Wire Analog Voice Grade Loop - Service Level 2 w/Loop or Ground Start Signaling - Zone 1		1	UEA	UEAL2	16.56	75.06	48.20	28.70	17.64			20.35	10.54	13.32	13.32
	2-Wire Analog Voice Grade Loop - Service Level 2 w/Loop or Ground Start Signaling - Zone 2		2	UEA	UEAL2	21.63	75.06	48.20	28.70	17.64			20.35	10.54	13.32	13.32
	2-Wire Analog Voice Grade Loop - Service Level 2 w/Loop or Ground Start Signaling - Zone 3		3	UEA	UEAL2	28.28	75.06	48.20	28.70	17.64			20.35	10.54	13.32	13.32
	Order Coordination for Specified Conversion Time (per LSR)			UEA	OCOSL		34.29									
	2-Wire Analog Voice Grade Loop - Service Level 2 w/Reverse Battery Signaling - Zone 1		1	UEA	UEAR2	16.56	75.06	48.20	28.70	17.64			20.35	10.54	13.32	13.32
	2-Wire Analog Voice Grade Loop - Service Level 2 w/Reverse Battery Signaling - Zone 2		2	UEA	UEAR2	21.63	75.06	48.20	28.70	17.64			20.35	10.54	13.32	13.32
	2-Wire Analog Voice Grade Loop - Service Level 2 w/Reverse Battery Signaling - Zone 3		3	UEA	UEAR2	28.28	75.06	48.20	28.70	17.64			20.35	10.54	13.32	13.32
	Order Coordination for Specified Conversion Time (per LSR)			UEA	OCOSL		34.29									
	4-WIRE ANALOG VOICE GRADE LOOP															
	4-Wire Analog Voice Grade Loop - Zone 1		1	UEA	UEAL4	24.70	122.76	85.57	76.35	39.16			20.35	10.54	13.32	13.32
	4-Wire Analog Voice Grade Loop - Zone 2		2	UEA	UEAL4	32.25	122.76	85.57	76.35	39.16			20.35	10.54	13.32	13.32
	4-Wire Analog Voice Grade Loop - Zone 3		3	UEA	UEAL4	42.17	122.76	85.57	76.35	39.16			20.35	10.54	13.32	13.32
	Order Coordination for Specified Conversion Time (per LSR)			UEA	OCOSL		34.29									
	2-WIRE ISDN DIGITAL GRADE LOOP															
	2-Wire ISDN Digital Grade Loop - Zone 1		1	UDN	U1L2X	22.00	142.76	88.88	76.35	39.16			20.35	10.54	13.32	13.32
	2-Wire ISDN Digital Grade Loop - Zone 2		2	UDN	U1L2X	29.02	142.76	88.88	76.35	39.16			20.35	10.54	13.32	13.32
	2-Wire ISDN Digital Grade Loop - Zone 3		3	UDN	U1L2X	37.95	142.76	88.88	76.35	39.16			20.35	10.54	13.32	13.32
	Order Coordination For Specified Conversion Time (per LSR)			UDN	OCOSL		34.29									
	2-WIRE Universal Digital Channel (UDC) COMPATIBLE LOOP															
	2-Wire Universal Digital Channel (UDC) Compatible Loop - Zone 1	I	1	UDC	UDC2X	21.15	228.92	152.42	110.01	21.63			20.35	10.54	13.32	13.32
	2-Wire Universal Digital Channel (UDC) Compatible Loop - Zone 2	I	2	UDC	UDC2X	27.62	228.92	152.42	110.01	21.63			20.35	10.54	13.32	13.32
	2-Wire Universal Digital Channel (UDC) Compatible Loop - Zone 3	I	3	UDC	UDC2X	36.12	228.92	152.42	110.01	21.63			20.35	10.54	13.32	13.32
	2-WIRE ASYMMETRICAL DIGITAL SUBSCRIBER LINE (ADSL) COMPATIBLE LOOP															
	2 Wire Unbundled ADSL Loop including manual service inquiry & facility reservation - Zone 1		1	UAL	UAL2X	13.82	270.01	234.63	74.54	39.14			20.35	10.54	13.32	13.32
	2 Wire Unbundled ADSL Loop including manual service inquiry & facility reservation - Zone 2		2	UAL	UAL2X	18.05	270.01	234.63	74.54	39.14			20.35	10.54	13.32	13.32
	2 Wire Unbundled ADSL Loop including manual service inquiry & facility reservation - Zone 3		3	UAL	UAL2X	23.60	270.01	234.63	74.54	39.14			20.35	10.54	13.32	13.32

BellSouth/MCIm
TENNESSEE
Rates
For
Network Elements

CATEGORY	UNBUNDLED NETWORK ELEMENT	Interim	Zone	BCS	USOC	RATES ($)					OSS RATES ($)					
							Nonrecurring		Nonrecurring Disconnect							
						Rec	First	Add'l	First	Add'l	Svc Order Submitted Elec per LSR	Svc Order Submitted Manually per LSR	Incremental Charge - Manual Svc Order vs. Electronic-1st	Incremental Charge - Manual Svc Order vs. Electronic-Add'l	Incremental Charge - Manual Svc Order vs. Electronic-Disc 1st	Incremental Charge - Manual Svc Order vs. Electronic-Disc Add'l
											SOMEC	SOMAN	SOMAN	SOMAN	SOMAN	SOMAN
	Order Coordination for Specified Conversion Time (per LSR)			UAL	OCOSL		34.29									
	2 Wire Unbundled ADSL Loop without manual service inquiry & facility reservaton - Zone 1	I	1	UAL	UAL2W	13.82	31.99	20.02	10.65	1.41			20.35	10.54	13.32	13.32
	2 Wire Unbundled ADSL Loop without manual service inquiry & facility reservaton - Zone 2	I	2	UAL	UAL2W	18.05	31.99	20.02	10.65	1.41			20.35	10.54	13.32	13.32
	2 Wire Unbundled ADSL Loop without manual service inquiry & facility reservaton - Zone 3	I	3	UAL	UAL2W	23.60	31.99	20.02	10.65	1.41			20.35	10.54	13.32	13.32
	Order Coordination for Specified Conversion Time (per LSR)			UAL	OCOSL		34.29									
2-WIRE HIGH BIT RATE DIGITAL SUBSCRIBER LINE (HDSL) COMPATIBLE LOOP																
	2 Wire Unbundled HDSL Loop including manual service inquiry & facility reservation - Zone 1		1	UHL	UHL2X	10.83	270.01	234.63	74.54	39.14			20.35	10.54	13.32	13.32
	2 Wire Unbundled HDSL Loop including manual service inquiry & facility reservation - Zone 2		2	UHL	UHL2X	14.15	270.01	234.63	74.54	39.14			20.35	10.54	13.32	13.32
	2 Wire Unbundled HDSL Loop including manual service inquiry & facility reservation - Zone 3		3	UHL	UHL2X	18.50	270.01	234.63	74.54	39.14			20.35	10.54	13.32	13.32
	Order Coordination for Specified Conversion Time (per LSR)			UHL	OCOSL		34.29									
	2 Wire Unbundled HDSL Loop without manual service inquiry and facility reservation - Zone 1	I	1	UHL	UHL2W	10.83	31.99	20.02	10.65	1.41			20.35	10.54	13.32	13.32
	2 Wire Unbundled HDSL Loop without manual service inquiry and facility reservation - Zone 2	I	2	UHL	UHL2W	14.15	31.99	20.02	10.65	1.41			20.35	10.54	13.32	13.32
	2 Wire Unbundled HDSL Loop without manual service inquiry and facility reservation - Zone 3	I	3	UHL	UHL2W	18.50	31.99	20.02	10.65	1.41			20.35	10.54	13.32	13.32
	Order Coordination for Specified Conversion Time (per LSR)			UHL	OCOSL		34.29									
4-WIRE HIGH BIT RATE DIGITAL SUBSCRIBER LINE (HDSL) COMPATIBLE LOOP																
	4 Wire Unbundled HDSL Loop including manual service inquiry and facility reservation - Zone 1		1	UHL	UHL4X	13.93	279.60	244.22	74.54	39.14			20.35	10.54	13.32	13.32
	4-Wire Unbundled HDSL Loop including manual service inquiry and facility reservation - Zone 2		2	UHL	UHL4X	18.20	279.60	244.22	74.54	39.14			20.35	10.54	13.32	13.32
	4-Wire Unbundled HDSL Loop including manual service inquiry and facility reservation - Zone 3		3	UHL	UHL4X	23.80	279.60	244.22	74.54	39.14			20.35	10.54	13.32	13.32
	Order Coordination for Specified Conversion Time (per LSR)			UHL	OCOSL		34.29									
	4-Wire Unbundled HDSL Loop without manual service inquiry and facility reservation - Zone 1	I	1	UHL	UHL4W	13.93	31.99	20.02	10.65	1.41			20.35	10.54	13.32	13.32
	4-Wire Unbundled HDSL Loop without manual service inquiry and facility reservation - Zone 2	I	2	UHL	UHL4W	18.20	31.99	20.02	10.65	1.41			20.35	10.54	13.32	13.32
	4-Wire Unbundled HDSL Loop without manual service inquiry and facility reservation - Zone 3	I	3	UHL	UHL4W	23.80	31.99	20.02	10.65	1.41			20.35	10.54	13.32	13.32
	Order Coordination for Specified Conversion Time (per LSR)			UHL	OCOSL		34.29									
4-WIRE DS1 DIGITAL LOOP																
	4-Wire DS1 Digital Loop - Zone 1		1	USL	USLXX	57.73	313.08	219.72	96.86	40.45			18.98	8.43	11.95	11.95
	4-Wire DS1 Digital Loop - Zone 2		2	USL	USLXX	75.40	313.08	219.72	96.86	40.45			18.98	8.43	11.95	11.95
	4-Wire DS1 Digital Loop - Zone 3		3	USL	USLXX	98.59	313.08	219.72	96.86	40.45			18.98	8.43	11.95	11.95
	Order Coordination for Specified Conversion Time (per LSR)			USL	OCOSL		34.59									
4-WIRE 19.2, 56 OR 64 KBPS DIGITAL GRADE LOOP																
	4 Wire Unbundled Digital 19.2 Kbps		1	UDL	UDL19	31.10	207.01	141.38	90.70	44.18			20.35	10.54	13.32	13.32
	4 Wire Unbundled Digital 19.2 Kbps		2	UDL	UDL19	40.61	207.01	141.38	90.70	44.18			20.35	10.54	13.32	13.32
	4 Wire Unbundled Digital 19.2 Kbps		3	UDL	UDL19	53.11	207.01	141.38	90.70	44.18			20.35	10.54	13.32	13.32
	4 Wire Unbundled Digital Loop 56 Kbps - Zone 1		1	UDL	UDL56	31.10	207.01	141.38	90.70	44.18			20.35	10.54	13.32	13.32
	4 Wire Unbundled Digital Loop 56 Kbps - Zone 2		2	UDL	UDL56	40.61	207.01	141.38	90.70	44.18			20.35	10.54	13.32	13.32
	4 Wire Unbundled Digital Loop 56 Kbps - Zone 3		3	UDL	UDL56	53.11	207.01	141.38	90.70	44.18			20.35	10.54	13.32	13.32
	Order Coordination for Specified Conversion Time (per LSR)			UDL	OCOSL		34.29									
	4 Wire Unbundled Digital Loop 64 Kbps - Zone 1		1	UDL	UDL64	31.10	207.01	141.38	90.70	44.18			20.35	10.54	13.32	13.32
	4 Wire Unbundled Digital Loop 64 Kbps - Zone 2		2	UDL	UDL64	40.61	207.01	141.38	90.70	44.18			20.35	10.54	13.32	13.32
	4 Wire Unbundled Digital Loop 64 Kbps - Zone 3		3	UDL	UDL64	53.11	207.01	141.38	90.70	44.18			20.35	10.54	13.32	13.32
	Order Coordination for Specified Conversion Time (per LSR)			UDL	OCOSL		34.29									
2-WIRE Unbundled COPPER LOOP																
	2 Wire Unbundled Copper Loop/Short including manual service inquiry & fac. reservation - Statewide	I	sw	UCL	UCLPB	12.16	131.99	120.02	10.65	1.41			20.35	10.54	13.32	13.32

BellSouth/MCIm
TENNESSEE
Rates
For
Network Elements

CATEGORY	UNBUNDLED NETWORK ELEMENT	Interim	Zone	BCS	USOC	RATES ($)					OSS RATES ($)					
							Nonrecurring		Nonrecurring Disconnect		Svc Order Submitted Elec per LSR	Svc Order Submitted Manually per LSR	Incremental Charge - Manual Svc Order vs. Electronic-1st	Incremental Charge - Manual Svc Order vs. Electronic-Add'l	Incremental Charge - Manual Svc Order vs. Electronic-Disc 1st	Incremental Charge - Manual Svc Order vs. Electronic-Disc Add'l
						Rec	First	Add'l	First	Add'l	SOMEC	SOMAN	SOMAN	SOMAN	SOMAN	SOMAN
	Order Coordination for Unbundled Copper Loops (per loop)			UCL	UCLMC		36.52	36.52								
	2-Wire Unbundled Copper Loop/Short without manual svc. inquiry and facility reservation - Statewide	I	sw	UCL	UCLPW	12.16	31.99	20.02	10.65	1.41			20.35	10.54	13.32	13.32
	Order Coordination for Unbundled Copper Loops (per loop)			UCL	UCLMC		36.52	36.52								
	2-Wire Unbundled Copper Loop/Long - includes manual svc inquiry and facility reservation - Statewide	I	sw	UCL	UCL2L	12.16	131.99	120.02	10.65	1.41			20.35	10.54	13.32	13.32
	Order Coordination for Unbundled Copper Loops (per loop)			UCL	UCLMC		36.52	36.52								
	2-Wire Unbundled Copper Loop/Long - without manual svc. inquiry and facility reservation - Statewide	I	sw	UCL	UCL2W	12.16	31.99	20.02	10.65	1.41			20.35	10.54	13.32	13.32
	Order Coordination for Unbundled Copper Loops (per loop)			UCL	UCLMC		36.52	36.52								
	2-Wire Unbundled Copper Loop - Non-Designed Zone 1	I	1	UEQ	UEQ2X	13.19	31.99	20.02	10.65	1.41			19.99	19.99	19.99	19.99
	2 Wire Unbundled Copper Loop - Non-Designed - Zone 2	I	2	UEQ	UEQ2X	17.23	31.99	20.02	10.65	1.41			19.99	19.99	19.99	19.99
	2 Wire Unbundled Copper Loop - Non-Designed - Zone 3	I	3	UEQ	UEQ2X	22.53	31.99	20.02	10.65	1.41			19.99	19.99	19.99	19.99
	Order Coordination 2 Wire Unbundled Copper Loop - Non-Designed (per loop)			UEQ	USBMC		36.52	36.52								
	Engineering Information Document			UEQ			28.80	28.80								
	Loop Testing - Basic 1st Half Hour			UEQ	URET1		78.92	78.92								
	Loop Testing - Basic Additional Half Hour			UEQ	URETA		23.33	23.33								
4-WIRE COPPER LOOP																
	4-Wire Copper Loop/Short - including manual service inquiry and facility reservation - Statewide	I	sw	UCL	UCL4S	12.16	131.99	120.02	10.65	1.41			20.35	10.54	13.32	13.32
	Order Coordination for Unbundled Copper Loops (per loop)			UCL	UCLMC		36.52	36.52								
	4-Wire Copper Loop/Short - without manual service inquiry and facility reservation - Statewide	I	sw	UCL	UCL4W	12.16	31.99	20.02	10.65	1.41			20.35	10.54	13.32	13.32
	Order Coordination for Unbundled Copper Loops (per loop)			UCL	UCLMC		36.52	36.52								
	4-Wire Unbundled Copper Loop/Long - includes manual svc inquiry and facility reservation - Statewide	I	sw	UCL	UCL4L	12.15	131.99	120.02	10.65	1.41			20.35	10.54	13.32	13.32
	Order Coordination for Unbundled Copper Loops (per loop)			UCL	UCLMC		36.52	36.52								
	4-Wire Unbundled Copper Loop/Long - without manual svc. inquiry and facility reservation - Statewide	I	sw	UCL	UCL4O	12.16	31.99	20.02	10.65	1.41			20.35	10.54	13.32	13.32
	Order Coordination for Unbundled Copper Loops (per loop)			UCL	UCLMC		36.52	36.52								
LOOP MODIFICATION																
	Unbundled Loop Modification, Removal of Load Coils - 2 Wire pair less than or equal to 18k ft	I		UAL, UHL, UCL, UEQ, ULS	ULM2L		65.40	65.40								
	Unbundled Loop Modification, Removal of Load Coils - 2 wire greater than 18k ft	I		UCL, ULS	ULM2G		710.71	23.77								
	Unbundled Loop Modification Removal of Load Coils - 4 Wire less than or equal to 18K ft	I		UHL, UCL	ULM4L		65.40	65.40								
	Unbundled Loop Modification Removal of Load Coils - 4 Wire pair greater than 18k ft	I		UCL	ULM4G		710.71	23.77								
	Unbundled Loop Modification Removal of Bridged Tap Removal, per unbundled loop	I		UAL, UHL, UCL, UEQ, UEF, ULS	ULMBT		65.44	65.44								
SUB-LOOPS																
Sub-Loop Distribution																
	Sub-Loop - Per Cross Box Location - CLEC Feeder Facility Set-Up	I		UEANL	USBSA		517.25	517.25					20.35	10.54	13.32	13.32
	Sub-Loop - Per Cross Box Location - Per 25 Pair Panel Set-Up	I		UEANL	USBSB		42.68	42.68					20.35	10.54	13.32	13.32
	Sub-Loop - Per Building Equipment Room - CLEC Feeder Facility Set-Up	I		UEANL	USBSC		313.01	313.01					20.35	10.54	13.32	13.32
	Sub-Loop - Per Building Equipment Room - Per 25 Pair Panel Set-Up	I		UEANL	USBSD		108.06	108.06					20.35	10.54	13.32	13.32

BellSouth/MCIm
TENNESSEE
Rates
For
Network Elements

CATEGORY	UNBUNDLED NETWORK ELEMENT	Interim	Zone	BCS	USOC	RATES ($) Rec	Nonrecurring First	Nonrecurring Add'l	Nonrecurring Disconnect First	Nonrecurring Disconnect Add'l	OSS RATES ($) Svc Order Submitted Elec per LSR SOMEC	Svc Order Submitted Manually per LSR SOMAN	Incremental Charge - Manual Svc Order vs. Electronic-1st SOMAN	Incremental Charge - Manual Svc Order vs. Electronic-Add'l SOMAN	Incremental Charge - Manual Svc Order vs. Electronic-Disc 1st SOMAN	Incremental Charge - Manual Svc Order vs. Electronic-Disc Add'l SOMAN
	Sub-Loop Distribution Per 2-Wire Analog Voice Grade Loop - Statewide	I	sw	UEANL	USBN2	10.02	148.84	112.34	73.14	36.65			20.35	10.54	13.32	13.32
	Order Coordination for Unbundled Sub-Loops, per sub-loop pair			UEANL	USBMC		34.29	34.29								
	Sub-Loop Distribution Per 4-Wire Analog Voice Grade Loop - Zone 1	I	1	UEANL	USBN4	7.30	147.93	75.11	99.96	16.98			20.35	10.54	13.32	13.32
	Sub-Loop Distribution Per 4-Wire Analog Voice Grade Loop - Zone 2	I	2	UEANL	USBN4	9.54	147.93	75.11	99.96	16.98			20.35	10.54	13.32	13.32
	Sub-Loop Distribution Per 4-Wire Analog Voice Grade Loop - Zone 3	I	3	UEANL	USBN4	12.47	147.93	75.11	99.96	16.98			20.35	10.54	13.32	13.32
	Order Coordination for Unbundled Sub-Loops, per sub-loop pair			UEANL	USBMC		34.29	34.29								
	Sub-Loop 2-Wire Intrabuilding Network Cable (INC)			UEANL	USBR2	1.35	94.56	29.35	94.41	13.09			20.35	10.54	13.32	13.32
	Order Coordination for Unbundled Sub-Loops, per sub-loop pair	I		UEANL	USBMC		34.29	34.29								
	Sub-Loop 4-Wire Intrabuilding Network Cable (INC)	I		UEANL	USBR4	2.26	116.14	37.10	99.96	16.98			20.35	10.54	13.32	13.32
	Order Coordination for Unbundled Sub-Loops, per sub-loop pair			UEANL	USBMC		34.29	34.29								
	2 Wire Copper Unbundled Sub-Loop Distribution - Zone 1	I	1	UEF	UCS2X	5.16	110.71	37.89	94.41	13.09			20.35	10.54	13.32	13.32
	2 Wire Copper Unbundled Sub-Loop Distribution - Zone 2	I	2	UEF	UCS2X	6.74	110.71	37.89	94.41	13.09			20.35	10.54	13.32	13.32
	2 Wire Copper Unbundled Sub-Loop Distribution - Zone 3	I	3	UEF	UCS2X	8.81	110.71	37.89	94.41	13.09			20.35	10.54	13.32	13.32
	Order Coordination for Unbundled Sub-Loops, per sub-loop pair			UEF	USBMC		34.29	34.29								
	4 Wire Copper Unbundled Sub-Loop Distribution - Zone 1	I	1	UEF	UCS4X	6.52	117.12	44.30	99.96	16.98			20.35	10.54	13.32	13.32
	4 Wire Copper Unbundled Sub-Loop Distribution - Zone 2	I	2	UEF	UCS4X	8.52	117.12	44.30	99.96	16.98			20.35	10.54	13.32	13.32
	4 Wire Copper Unbundled Sub-Loop Distribution - Zone 3	I	3	UEF	UCS4X	11.14	117.12	44.30	99.96	16.98			20.35	10.54	13.32	13.32
	Order Coordination for Unbundled Sub-Loops, per sub-loop pair			UEF	USBMC		34.29	34.29								
Sub-Loop Feeder																
	USL-Feeder, DS0 Set-up per Cross Box location - CLEC Distribution Facility set-up			UEA, UDN,UCL,UDL, UDC	USBFW		517.25									
	USL Feeder - DS0 Set-up per Cross Box location - per 25 pair set-up	I		UEA, UDN,UCL,UDL, UDC	USBFX		42.68	42.68								
	USL Feeder DS1 Set-up at DSX location, per DS1 termination	I		USL	USBFZ		531.04	11.34								
	Unbundled Sub-Loop Feeder Loop, 2 Wire Ground-Start, Voice Grade- Statewide		sw	UEA	USBFA	12.05	122.24	85.05	76.35	39.16			20.35	10.54	13.32	13.32
	Order Coordination for Specified Conversion Time, per LSR			UEA	OCOSL		34.29									
	Unbundled Sub-Loop Feeder Loop, 2 Wire Loop-Start, Voice Grade - Statewide		sw	UEA	USBFB	12.05	122.24	85.05	76.35	39.16			20.35	10.54	13.32	13.32
	Order Coordination for Specified Time Conversion, per LSR			UEA	OCOSL		34.29									
	Unbundled Sub-Loop Feeder Loop, 2 Wire Reverse Battery, Voice Grade Loop - Statewide		sw	UEA	USBFC	12.05	122.24	85.05	76.35	39.16			20.35	10.54	13.32	13.32
	Order Coordination For Specified Conversion Time, per LSR			UEA	OCOSL		34.29									
	Unbundled Sub-Loop Feeder Loop, 4 Wire Ground-Start, Voice Grade - Zone 1	I	1	UEA	USBFD	21.52	137.31	61.93	118.04	30.13			20.35	10.54	13.32	13.32
	Unbundled Sub-Loop Feeder Loop, 4 Wire Ground-Start, Voice Grade - Zone 2	I	2	UEA	USBFD	28.11	137.31	61.93	118.04	30.13			20.35	10.54	13.32	13.32
	Unbundled Sub-Loop Feeder Loop, 4 Wire Ground Start, Voice Grade - Zone 3	I	3	UEA	USBFD	36.76	137.31	61.93	118.04	30.13			20.35	10.54	13.32	13.32
	Order Coordination For Specified Conversion Time, Per LSR			UEA	OCOSL		34.29									
	Unbundled Sub-Loop Feeder Loop, 4 Wire Loop-Start, Voice Grade - Zone 1	I	1	UEA	USBFE	21.52	137.31	61.93	118.04	30.13			20.35	10.54	13.32	13.32
	Unbundled Sub-Loop Feeder Loop, 4 Wire Loop-Start, Voice Grade - Zone 2	I	2	UEA	USBFE	28.11	137.31	61.93	118.04	30.13			20.35	10.54	13.32	13.32
	Unbundled Sub-Loop Feeder Loop, 4 Wire Loop-Start, Voice Grade - Zone 3	I	3	UEA	USBFE	36.76	137.31	61.93	118.04	30.13			20.35	10.54	13.32	13.32
	Order Coordination For Specified Conversion Time, Per LSR			UEA	OCOSL		34.29									
	Unbundled Sub-Loop Feeder Loop, 2 Wire ISDN BRI - Zone 1	I	1	UDN	USBFF	16.11	142.83	67.45	104.67	18.53			19.99	19.99	19.99	19.99
	Unbundled Sub-Loop Feeder Loop, 2-Wire ISDN BRI - Zone 2	I	2	UDN	USBFF	21.04	142.83	67.45	104.67	18.53			19.99	19.99	19.99	19.99
	Unbundled Sub-Loop Feeder Loop, 2-Wire ISDN BRI - Zone 3	I	3	UDN	USBFF	27.51	142.83	67.45	104.64	18.53			19.99	19.99	19.99	19.99
	Order Coordination For Specified Conversion Time, Per LSR			UDN	OCOSL		34.29									
	Unbundled Sub-Loop Feeder, 2 Wire UDC (IDSL compatible)	I	1	UDC	USBFS	16.11	142.83	67.45	104.67	18.53			19.99	19.99	19.99	19.99
	Unbundled Sub-Loop Feeder, 2 Wire UDC (IDSL compatible)	I	2	UDC	USBFS	21.04	142.83	67.45	104.67	18.53			19.99	19.99	19.99	19.99
	Unbundled Sub-Loop Feeder, 2 Wire UDC (IDSL compatible)	I	3	UDC	USBFS	27.51	142.83	67.45	104.64	18.53			19.99	19.99	19.99	19.99
	Unbundled Sub-Loop Feeder Loop, 4-Wire DS1 - Zone 1	I	1	USL	USBFG	39.74	116.00	40.62	106.82	18.91			19.99	19.99	19.99	19.99
	Unbundled Sub-Loop Feeder Loop, 4-Wire DS1 - Zone 2	I	2	USL	USBFG	51.90	116.00	40.62	106.82	18.91			19.99	19.99	19.99	19.99
	Unbundled Sub-Loop Feeder Loop, 4-Wire DS1 - Zone 3	I	3	USL	USBFG	67.86	116.00	40.62	106.82	18.91			19.99	19.99	19.99	19.99
	Order Coordination For Specified Conversion Time, Per LSR			USL	OCOSL		34.29									
	Unbundled Sub-Loop Feeder, 2-Wire Copper Loop - Zone 1	I	1	UCL	USBFH	9.52	114.27	38.89	104.64	18.53			19.99	19.99	19.99	19.99
	Unbundled Sub-Loop Feeder Loop, 2-Wire Copper Loop - Zone 2	I	2	UCL	USBFH	12.43	114.27	38.89	104.64	18.53			19.99	19.99	19.99	19.99
	Unbundled Sub-Loop Feeder Loop, 2-Wire Copper Loop - Zone 3	I	3	UCL	USBFH	16.26	114.27	38.89	104.64	18.53			19.99	19.99	19.99	19.99
	Order Coordination For Specified Conversion Time, per LSR			UCL	OCOSL		34.29									
	Sub-Loop Feeder - Per 4-Wire Copper Loop - Zone 1	I	1	UCL	USBFJ	14.37	123.41	48.03	110.44	22.53			19.99	19.99	19.99	19.99
	Sub-Loop Feeder - Per 4-Wire Copper Loop - Zone 2	I	2	UCL	USBFJ	18.76	123.41	48.03	110.44	22.53			19.99	19.99	19.99	19.99
	Sub-Loop Feeder - Per 4-Wire Copper Loop - Zone 3	I	3	UCL	USBFJ	24.53	123.41	48.03	110.44	22.53			19.99	19.99	19.99	19.99

BellSouth/MCIm
TENNESSEE
Rates
For
Network Elements

CATEGORY	UNBUNDLED NETWORK ELEMENT	Interim	Zone	BCS	USOC	RATES ($)					OSS RATES ($)					
							Nonrecurring		Nonrecurring Disconnect		Svc Order Submitted Elec per LSR	Svc Order Submitted Manually per LSR	Incremental Charge - Manual Svc Order vs. Electronic-1st	Incremental Charge - Manual Svc Order vs. Electronic-Add'l	Incremental Charge - Manual Svc Order vs. Electronic-Disc 1st	Incremental Charge - Manual Svc Order vs. Electronic-Disc Add'l
						Rec	First	Add'l	First	Add'l	SOMEC	SOMAN	SOMAN	SOMAN	SOMAN	SOMAN
	Order Coordination For Specified Conversion Time, per LSR			UCL	OCOSL		34.29									
	Sub-Loop Feeder - Per 4-Wire 19.2 Kbps Digital Grade Loop	I	1	UDL	USBFN	26.06	116.00	40.62	106.82	18.91			19.99	19.99	19.99	19.99
	Sub-Loop Feeder - Per 4-Wire 19.2 Kbps Digital Grade Loop	I	2	UDL	USBFN	34.03	116.00	40.62	106.82	18.91			19.99	19.99	19.99	19.99
	Sub-Loop Feeder - Per 4-Wire 19.2 Kbps Digital Grade Loop	I	3	UDL	USBFN	44.50	116.00	40.62	106.82	18.91			19.99	19.99	19.99	19.99
	Sub-Loop Feeder - Per 4-Wire 56 Kbps Digital Grade Loop - Zone 1	I	1	UDL	USBFO	26.06	116.00	40.62	106.82	18.91			19.99	19.99	19.99	19.99
	Sub-Loop Feeder - Per 4-Wire 56 Kbps Digital Grade Loop - Zone 2	I	2	UDL	USBFO	34.03	116.00	40.62	106.82	18.91			19.99	19.99	19.99	19.99
	Sub-Loop Feeder - Per 4-Wire 56 Kbps Digital Grade Loop - Zone 3	I	3	UDL	USBFO	44.50	116.00	40.62	106.82	18.91			19.99	19.99	19.99	19.99
	Order Coordination For Specified Time Conversion, per LSR			UDL	OCOSL		34.29									
	Sub-Loop Feeder - Per 4-Wire 64 Kbps Digital Grade Loop - Zone 1	I	1	UDL	USBFP	26.06	116.00	40.62	106.82	18.91			19.99	19.99	19.99	19.99
	Sub-Loop Feeder - Per 4-Wire 64 Kbps Digital Grade Loop - Zone 2	I	2	UDL	USBFP	34.03	116.00	40.62	106.82	18.91			19.99	19.99	19.99	19.99
	Sub-Loop Feeder - Per 4-Wire 64 Kbps Digital Grade Loop - Zone 3	I	3	UDL	USBFP	44.50	116.00	40.62	106.82	18.91			19.99	19.99	19.99	19.99
	Order Coordination For Specified Conversion Time, per LSR			UDL	OCOSL		34.29									
	Sub Loop Feeder - DS3 - Per Mile Per Month	I		UE3	1L5SL	14.11										
	Sub Loop Feeder - DS3 - Facility Termination Per Month	I		UE3	USBF1	333.26	3,390.00	407.68	165.17	501.31			20.35	10.54	13.32	
	Sub Loop Feeder – STS-1 – Per Mile Per Month	I		UDLSX	1L5SL	14.11										
	Sub Loop Feeder - STS-1 - Facility Termination Per Month	I		UDLSX	USBF7	359.02	3,390.00	407.68	165.17	501.31			20.35	10.54	13.32	
	Sub Loop Feeder – OC-3 – Per Mile Per Month	I		UDLO3	1L5SL	10.71										
	Sub Loop Feeder - OC-3 - Facility Termination Protection Per Month	I		UDLO3	USBF5	56.64										
	Sub Loop Feeder - OC-3 - Facility Termination Per Month	I		UDLO3	USBF2	546.31	3,390.00	407.68	165.17	501.31			20.35	10.54	13.32	
	Sub Loop Feeder - OC-12 - Per Mile Per Month	I		UDL12	1L5SL	13.18										
	Sub Loop Feeder - OC-12 - Facility Termination Protection Per Month	I		UDL12	USBF6	639.98										
	Sub Loop Feeder - OC-12 - Facility Termination Per Month	I		UDL12	USBF3	1,697.00	3,390.00	407.68	165.17	501.31			20.35	10.54	13.32	
	Sub Loop Feeder - OC-48 - Per Mile Per Month	I		UDL48	1L5SL	43.22										
	Sub Loop Feeder - OC-48 - Facility Termination Protection Per Month	I		UDL48	USBF9	320.36										
	Sub Loop Feeder - OC-48 - Facility Termination Per Month	I		UDL48	USBF4	1,457.00	3,576.00	407.68	165.17	501.31			20.35	10.54	13.32	
	Sub Loop Feeder - OC-12 Interface On OC-48	I		UDL48	USBF8	361.44	789.41	407.68	165.17	501.31						
Unbundled Sub-Loop Modification																
	Unbundled Sub-Loop Modification - 2-W Copper Dist Load Coil/Equip Removal per 2-W PR	I		UEF	ULM2X		335.35	7.82					20.34	10.54	13.32	13.32
	Unbundled Sub-loop Modification - 4-W Copper Dist Load Coil/Equip Removal per 4-W PR	I		UEF	ULM4X		335.36	7.82					20.35	10.54	13.32	13.32
	Unbundled Sub-loop Modification - 2-w/4-w Copper Dist Bridged Tap Removal, per PR unloaded	I		UEF	ULM4T		528.48	9.74					20.35	10.54	13.32	13.32
Unbundled Network Terminating Wire (UNTW)																
	Unbundled Network Terminating Wire (UNTW) per Pair	I		UENTW	UENPP	0.45	2.48	2.48					20.35	10.54	13.32	13.32
Network Interface Device (NID)																
	Network Interface Device (NID) - 1-2 lines	I		UENTW	UND12		89.69	54.56					20.35	10.54	13.32	13.32
	Network Interface Device (NID) - 1-6 lines	I		UENTW	UND16		129.65	94.51					20.35	10.54	13.32	13.32
	Network Interface Device Cross Connect - 2 W	I		UENTW	UNDC2		0.74	0.74					20.35	10.54	13.32	13.32
	Network Interface Device Cross Connect - 4W	I		UENTW	UNDC4		0.74	0.74					20.35	10.54	13.32	13.32
UNBUNDLED LOOP CONCENTRATION																
	Loop Channelization System			ULC	ULCCS	307.07	307.34	74.37	4.18				20.35	10.54	13.32	13.32
	CO Channel Interface - 2-Wire Voice Grade			ULC	ULCC2	1.20	9.57	9.52	8.66	8.60			20.35	10.54	13.32	13.32
	Unbundled Loop Concentration - System A (TR008)	I		ULC	UCT8A	500.18	613.60	613.60					20.35	10.54	13.32	13.32
	Unbundled Loop Concentration - System B (TR008)	I		ULC	UCT8B	54.82	255.67	255.67					20.35	10.54	13.32	13.32
	Unbundled Loop Concentration - System A (TR303)	I		ULC	UCT3A	539.00	613.60	613.60					20.35	10.54	13.32	13.32
	Unbundled Loop Concentration - System B (TR303)	I		ULC	UCT3B	92.37	255.67	255.67					20.35	10.54	13.32	13.32
	Unbundled Loop Concentration - DS1 Loop Interface Card	I		ULC	UCTCO	6.23	74.39	53.07	30.23	8.46			20.35	10.54	13.32	13.32
	Unbundled Loop Concentration - ISDN Loop Interface (Brite Card)	I		UDN	ULCC1	8.46	8.69	8.65	9.71	9.65			20.35	10.54	13.32	13.32
	Unbundled Loop Concentration - UDC Loop Interface (Brite Card)	I		UDC	ULCCU	8.46	8.69	8.65	9.71	9.65			20.35	10.54	13.32	13.32
	Unbundled Loop Concentration - -2 Wire Voice-Loop Start or Ground Start Loop Interface (POTS Card)	I		UEA	ULCC2	2.32	8.69	8.65	9.71	9.65			20.35	10.54	13.32	13.32
	Unbundled Loop Concentration - 2 Wire Voice - Reverse Battery Loop Interface (SPOTS Card)	I		UEA	ULCCR	12.45	8.69	8.65	9.71	9.65			20.35	10.54	13.32	13.32
	Unbundled Loop Concentration - 4 Wire Voice Loop Interface (Specials Card)	I		UEA	ULCC4	7.53	8.69	8.65	9.71	9.65			20.35	10.54	13.32	13.332
	Unbundled Loop Concentration - TEST CIRCUIT Card	I		ULC	UCTTC	35.77	8.69	8.65	9.71	9.65			20.35	10.54	13.32	13.32
	Unbundled Loop Concentration - Digital 19.2 Kbps Data Loop Interface	I		UDL	ULCC7	11.03	8.069	8.65	9.71	9.65			20.35	10.54	13.32	13.32

BellSouth/MCIm
TENNESSEE
Rates
For
Network Elements

CATEGORY	UNBUNDLED NETWORK ELEMENT	Interim	Zone	BCS	USOC	RATES ($)					OSS RATES ($)					
							Nonrecurring		Nonrecurring Disconnect							
						Rec	First	Add'l	First	Add'l	Svc Order Submitted Elec per LSR	Svc Order Submitted Manually per LSR	Incremental Charge - Manual Svc Order vs. Electronic-1st	Incremental Charge - Manual Svc Order vs. Electronic-Add'l	Incremental Charge - Manual Svc Order vs. Electronic-Disc 1st	Incremental Charge - Manual Svc Order vs. Electronic-Disc Add'l
											SOMEC	SOMAN	SOMAN	SOMAN	SOMAN	SOMAN
	Unbundled Loop Concentration - Digital 56 Kbps Data Loop Interface	I		UDL	ULCC5	11.03	8.69	8.65	9.71	9.65			20.35	10.54	13.32	13.32
	Unbundled Loop Concentration - Digital 64 Kbps Data Loop Interface	I		UDL	ULCC6	11.03	8.69	8.65	9.71	9.65			20.35	10.54	13.32	13.32
	Unbundled Loop Concentration - Loop Interface For Digital 19.2 Kbps Data															
UNE OTHER, PROVISIONING ONLY - NO RATE																
	NID - Dispatch and Service Order for NID installation			UENTW	UNDBX											
	UNTW Circuit Id Establishment, Provisioning Only - No Rate			UENTW	UENCE											
	Unbundled Contract Name, Provisioning Only - No Rate			UEANL, UEF,UE Q,UENT W	UNECN											
	Unbundled Contact Name, Provisioning Only - no rate			UAL,UC L,UDC, UDL,UD N,UEA, UHL,UL C	UNECN	0.00	0.00									
	Unbundled Sub-Loop Feeder-2 Wire Cross Box Jumper - no rate			UEA,UD N,UCL, UDC	USBFQ	0.00	0.00									
	Unbundled Sub-Loop Feeder-4 Wire Cross Box Jumper - no rate			UEA,US L,UCL,U DL	USBFR	0.00	0.00									
	Unbundled DS1 Loop - Superframe Format Option - no rate			USL	CCOSF	0.00	0.00									
	Unbundled DS1 Loop - Expanded Superframe Format option - no rate			USL	CCOEF	0.00	0.00									
HIGH CAPACITY UNBUNDLED LOCAL LOOP																
	High Capacity Unbundled Local Loop - DS3 - Per Mile per month	I		UE3	1L5ND	9.19										
	High Capacity Unbundled Local Loop - DS3 - Facility Termination per month	I		UE3	UE3PX	374.24	595.67	304.50	234.83	170.16			36.84	36.84	19.01	19.01
	High Capacity Unbundled Local Loop - STS-1 - Per Mile per month	I		UDLSX	1L5ND	9.19										
	High Capacity Unbundled Local Loop - STS-1 - Facility Termination per month	I		UDLSX	UDLS1	389.35	595.37	304.50	215.82	151.15			36.84	36.84	19.01	19.01
LOOP MAKE-UP																
	Loop Makeup - Preordering Without Reservation, per working or spare facility queried (Manual).	I		UMK	UMKLW		100.00	100.00								
	Loop Makeup - Preordering With Reservation, per spare facility queried (Manual).	I		UMK	UMKLP		100.00	100.00								
	Loop Makeup--With or Without Reservation, per working or spare facility queried (Mechanized)	I		UMK	PSUMK		0.6888	0.6888								
LINE SHARING																
	Line Sharing Splitter, per System 96 Line Capacity	I		ULS	ULSDA	100.00	150.00	0.00	150.00	0.00		0.00				
	Line Sharing Splitter, per System 24 Line Capacity	I		ULS	ULSDB	25.00	150.00	0.00	150.00	0.00		0.00				
	Line Sharing Splitter, Per System, 8 Line Capacity	I		ULS	ULSD8	8.33	150.00	0.00	150.00	0.00		0.00				
	Line Sharing - per Line Activation	I		ULS	ULSDC	0.61	40.00	21.39	35.06	10.79			20.35	10.54	13.32	13.32
	Line Sharing - per Subsequent Activity per Line Rearrangement	I		ULS	ULSDS		30.00	15.00					20.35	10.54		
UNBUNDLED TRANSPORT																

BellSouth/MCIm
TENNESSEE
Rates
For
Network Elements

CATEGORY	UNBUNDLED NETWORK ELEMENT	Interim	Zone	BCS	USOC	RATES ($)					OSS RATES ($)					
							Nonrecurring		Nonrecurring Disconnect		Svc Order Submitted Elec per LSR	Svc Order Submitted Manually per LSR	Incremental Charge - Manual Svc Order vs. Electronic-1st	Incremental Charge - Manual Svc Order vs. Electronic-Add'l	Incremental Charge - Manual Svc Order vs. Electronic-Disc 1st	Incremental Charge - Manual Svc Order vs. Electronic-Disc Add'l
						Rec	First	Add'l	First	Add'l	SOMEC	SOMAN	SOMAN	SOMAN	SOMAN	SOMAN
	INTEROFFICE CHANNEL - DEDICATED TRANSPORT - VOICE GRADE															
	Interoffice Channel - Dedicated Transport - 2-Wire Voice Grade - Per Mile per month			U1TVX	1L5XX	0.0174										
	Interoffice Channel - Dedicated Transport- 2- Wire Voice Grade - Facility Termination per month			U1TVX	U1TV2	18.58	55.39	17.37	27.96	3.51			20.35	21.09	9.80	10.54
	Interoffice Channel - Dedicated Transpor t- 2-Wire Voice Grade Rev Bat. - Per Mile per month			U1TVX	1L5XX	0.0174										
	Interoffice Channel - Dedicated Transport- 2- Wire VG Rev Bat. - Facility Termination per month			U1TVX	U1TR2	18.58	55.39	17.37	27.96	3.51			20.35	21.09	9.80	10.54
	Interoffice Channel - Dedicated Transport - 4-Wire Voice Grade - Per Mile per month			U1TVX	1L5XX	0.0054										
	Interoffice Channel - Dedicated Transport - 4- Wire Voice Grade - Facility Termination per month			U1TVX	U1TV4	24.09	37.87	26.02	30.78	13.07			15.08	15.08	8.66	8.66
	Interoffice Channel - Dedicated Transport - 56 kbps - per mile per month			U1TDX	1L5XX	0.0174										
	Interoffice Channel - Dedicated Transport - 56 kbps - Facility Termination per month			U1TDX	U1TD5	17.98	55.39	17.37	27.96	3.51			20.35	21.09	9.80	10.54
	Interoffice Channel - Dedicated Transport - 64 kbps - per mile per month			U1TDX	1L5XX	0.0174										
	Interoffice Channel - Dedicated Transport - 64 kbps - Facility Termination per month			U1TDX	U1TD6	17.98	55.39	17.37	27.96	3.51			20.35	21.09	9.80	10.54
	INTEROFFICE CHANNEL - DEDICATED TRANSPORT - DS1															
	Interoffice Channel - Dedicated Channel - DS1 - Per Mile per month	I		U1TD1	1L5XX	0.3525										
	Interoffice Channel - Dedicated Tranport - DS1 - Facility Termination per month			U1TD1	U1TF1	77.86	112.40	76.27	19.55	14.99			20.35	21.09	9.80	10.54
	INTEROFFICE CHANNEL - DEDICATED TRANSPORT- DS3															
	Interoffice Channel - Dedicated Transport - DS3 - Per Mile per month	I		U1TD3	1L5XX	2.34										
	Interoffice Channel - Dedicated Transport - DS3 - Facility Termination per month	I		U1TD3	U1TF3	848.99	395.29	176.56	109.04	105.91			36.84	36.84	19.01	19.01
	INTEROFFICE CHANNEL - DEDICATED TRANSPORT- STS-1															
	Interoffice Channel - Dedicated Transport - STS-1 - Per Mile per month	I		U1TS1	1L5XX	2.34										
	Interoffice Channel - Dedicated Transport - STS-1 - Facility Termination per month	I		U1TS1	U1TFS	849.30	395.29	176.56	109.04	105.91			36.84	36.84	19.01	19.01
	LOCAL CHANNEL - DEDICATED TRANSPORT															
	Local Channel - Dedicated - 2-Wire Voice Grade Per Month	I		ULDVX	ULDV2	19.43	199.33	24.16	54.81	4.80			20.35	10.54	13.32	13.32
	Local Channel - Dedicated - 2-Wire Voice Grade Rev Bat per month	I		ULDVX	ULDR2	19.43	199.33	24.16	54.81	4.80			20.35	21.09	9.80	10.54
	Local Channel - Dedicated - 4-Wire Voice Grade per month	I		UNDVX	ULDV4	20.56	201.53	24.83	55.52	5.51			20.35	20.35	13.32	13.32
	Local Channel - Dedicated - DS1 per month	I		ULDD1	ULDF1	40.99	277.35	233.26	33.18	22.30			45.68	1.76	21.75	1.76
	Local Channel - Dedicated - DS3 - Per Mile per month	I		ULDD3	1L5NC	7.15										
	Local Channel - Dedicated - DS3 - Facility Termination per month	I		ULDD3	ULDF3	611.30	595.37	304.50	215.82	151.15			36.84	36.84	19.01	19.01
	Local Channel - Dedicated - STS-1- Per Mile per month	I		ULDS1	1L5NC	7.15										
	Local Channel - Dedicated - STS-1 - Facility Termination per month	I		ULDS1	ULDFS	599.59	588.07	297.20	215.82	151.15			20.35	21.09	9.80	10.54
MULTIPLEXERS																
	Channelization - DS1 to DS0 Channel System	I		UXTD1	MQ1	80.77	141.67	77.11	44.47	42.62			20.35	9.80	11.49	1.18
	OCU-DP COCI (data) - DS1 to DS0 Channel System - per month (2.4-64kbs)			UDL	1D1DD	1.82	6.07	4.66								
	2-wire ISDN COCI (BRITE) - DS1 to DS0 Channel Systsem - per month			UDN	UC1CA	3.10	6.07	4.66								
	Voice Grade COCI - DS1 to DS0 Channel System - per month			UEA	1D1VG	0.91	6.07	4.66								
	DS3 to DS1 Channel System per month	I		UXTD3	MQ3	222.98	308.03	108.47	6.34	4.23			20.35	9.80	11.49	1.18
	STS1 to DS1 Channel System per month	I		UXTS1	MQ3	222.98	308.03	108.47	6.34	4.23			20.35	21.09	9.80	9.80
	DS3 Interface Unit (DS1 COCI) used with Loop per month			USL	UC1D1	17.58	6.07	4.66								
DARK FIBER																
	Dark Fiber, Four Fiber Strands, Per Route Mile or Fraction Thereof per month - Local Channel			UDF	1L5DC	53.23										
	NRC Dark Fiber - Local Channel	I		UDF	UDFC4		1,219.22	169.75	453.22	339.34			20.35	21.09	9.80	10.54
	Dark Fiber, Four Fiber Strands, Per Route Mile or Fraction Thereof per month - Interoffice Channel			UDF	1L5DF	53.23										
	NRC Dark Fiber - Interoffice Channel	I		UDF	UDF14		1,219.22	169.75	453.22	339.34			20.35	21.09	9.80	10.54

BellSouth/MCIm
TENNESSEE
Rates
For
Network Elements

CATEGORY	UNBUNDLED NETWORK ELEMENT	Interim	Zone	BCS	USOC	RATES ($)					OSS RATES ($)					
							Nonrecurring		Nonrecurring Disconnect		Svc Order Submitted Elec per LSR	Svc Order Submitted Manually per LSR	Incremental Charge - Manual Svc Order vs. Electronic-1st	Incremental Charge - Manual Svc Order vs. Electronic-Add'l	Incremental Charge - Manual Svc Order vs. Electronic-Disc 1st	Incremental Charge - Manual Svc Order vs. Electronic-Disc Add'l
						Rec	First	Add'l	First	Add'l	SOMEC	SOMAN	SOMAN	SOMAN	SOMAN	SOMAN
	Dark Fiber, Four Fiber Strands, Per Route Mile or Fraction Thereof per month - Local Loop			UDF	1L5DL	53.23										
	NRC Dark Fiber - Local Loop	I		UDF	UDFL4		1,219.22	169.75	453.22	339.34			20.35	21.09	9.80	10.54
TRANSPORT OTHER																
	Clear Channel Capability (B8ZS/ESF) Option - Subsequent - per DS1 Channel	I		UNC1X	CCOEF		185.16	23.85	2.03	0.79			20.35	21.09	9.80	10.54
	Clear Channel Capability (B8ZS/SF) Option - Subsequent - per DS1 Channel	I		UNC1X	CCOSF		185.16	23.85	2.03	0.79			20.35	21.09	9.80	10.54
8XX ACCESS TEN DIGIT SCREENING																
	8XX Access Ten Digit Screening, Per Call			OHD		0.0005192										
	8XX Access Ten Digit Screening, Reservation Charge Per 8XX Number Reserved			OHD	N8R1X		5.21	0.76					20.35	20.35	13.28	13.28
	8XX Access Ten Digit Screening, Per 8XX No. Established W/O POTS Translations			OHD			11.47	1.46	7.34	0.7602			20.35	20.35	13.28	13.28
	8XX Access Ten Digit Screening, Per 8XX No. Established With POTS Translations			OHD	N8FTX		11.47	1.46	7.34	0.7602			20.35	20.35	13.28	13.28
	8XX Access Ten Digit Screening, Customized Area of Service Per 8XX Number			OHD	N8FCX		4.47	2.24					20.35	20.35	13.28	13.28
	8XX Access Ten Digit Screening, Multiple InterLATA CXR Routing Per CXR Requested Per 8XX No.			OHD	N8FMX		5.23	3.00					20.35	20.35	13.28	13.28
	8XX Access Ten Digit Screening, Change Charge Per Request			OHD	N8FAX		5.97	0.76					20.35	20.35	13.28	13.28
	8XX Access Ten Digit Screening, Call Handling and Destination Features			OHD	N8FDX		4.47						20.35	20.35	13.28	13.28
LINE INFORMATION DATA BASE ACCESS (LIDB)																
	LIDB Common Transport Per Query			OQT		0.0000354										
	LIDB Validation Per Query			OQU		0.0117403										
	LIDB Originating Point Code Establishment or Change			OQT, OQU	NRPBX		49.03						20.35	20.35	13.28	13.28
SIGNALING (CCS7)																
	CCS7 Signaling Termination, Per STP Port			UDB	PT8SX	138.41							20.35	20.35	13.32	13.32
	CCS7 Signaling Usage, Per TCAP Message			UDB		0.0000916										
	CCS7 Signaling Connection, Per link (A link)			UDB	TPP++	17.84	130.84	130.84					20.35	20.35	13.32	13.32
	CCS7 Signaling Connection, Per link (B link) (also known as D link)			UDB	TPP++	17.84	130.84	130.84					20.35	20.35	13.32	13.32
	CCS7 Signaling Usage, Per ISUP Message			UDB		0.0000373										
	CCS7 Signaling Usage Surrogate, per link per LATA			UDB	STU56	352.30							20.35	20.35	13.32	13.32
	CCS7 Signaling Point Code, per Originating Point Code Establishment or Change, per STP affected	I		UDB	CCAPO		40.00	40.00					20.35	20.35	13.32	13.32
	CCS7 Signaling Point Code, per Destination Point Code Establishment or Change, Per Stp Affected	I		UDB	CCAPD		8.00	8.00					20.35	20.35	13.32	13.32
E911 SERVICE																
CALLING NAME (CNAM) SERVICE																
	CNAM for DB Owners, Per Query	I		OQV		0.016										
	CNAM for Non DB Owners, Per Query	I		OQV		0.01										
	CNAM (Non-Databs Owner), NRC, applies when using the Character Based User Interface (CHUI)	I		OQV	CDDCH		595.00	595.00					20.35	20.35	13.28	13.28
LNP QUERY SERVICE																
OPERATOR CALL PROCESSING																
	Oper. Call Processing - Oper. Provided, Per Min. - Using BST LIDB					1.08										
	Oper. Call Processing - Oper. Provided, Per Min. - Using Foreign LIDB					1.13										
	Oper. Call Processing - Fully Automated, per Call - Using BST LIDB					0.1010353										
	Oper. Call Processing - Fully Automated, per Call - Using Foreign LIDB					0.1228180										
INWARD OPERATOR SERVICES																
	Inward Operator Services - Verification, Per Call					1.00										
	Inward Operator Services - Verification and Emergency Interrupt - Per Call					1.95										
BRANDING - OPERATOR CALL PROCESSING																
	Recording of Custom Branded OA Announcement				CBAOS		1,555.00	1,553.00	7.03	7.03			19.99	19.99	19.99	19.99

BellSouth/MCIm
TENNESSEE
Rates
For
Network Elements

CATEGORY	UNBUNDLED NETWORK ELEMENT	Interim	Zone	BCS	USOC	RATES ($)					OSS RATES ($)					
							Nonrecurring		Nonrecurring Disconnect							
						Rec	First	Add'l	First	Add'l	Svc Order Submitted Elec per LSR	Svc Order Submitted Manually per LSR	Incremental Charge - Manual Svc Order vs. Electronic-1st	Incremental Charge - Manual Svc Order vs. Electronic-Add'l	Incremental Charge - Manual Svc Order vs. Electronic-Disc 1st	Incremental Charge - Manual Svc Order vs. Electronic-Disc Add'l
											SOMEC	SOMAN	SOMAN	SOMAN	SOMAN	SOMAN
	Loading of Custom Branded OA Announcement per shelf/NAV				CBAOL		240.71	240.71					19.99	19.99		
	Unbranding via OLNS for UNEP CLEC															
	Loading of OA per OCN (Regional)	I					1,200.00	1,200.00								
DIRECTORY ASSISTANCE SERVICES																
	DIRECTORY ASSISTANCE ACCESS SERVICE															
	Directory Assistance Access Service Calls, Charge Per Call					0.228679										
	DIRECTORY ASSISTANCE CALL COMPLETION ACCESS SERVICE (DACC)															
	Directory Assistance Call Completion Access Service (DACC), Per Call Attempt					0.036477										
	DIRECTORY TRANSPORT															
	SWA Common transport per Directory Assistance Access Service Call					0.0002710										
	SWA Common Transport per Directory Assistance Access Service Call Mile					0.00001650										
	Access Tandem Switching per Directory Assistance Access Service Call					0.00018750										
	DS3 to DS1 Multiplexer per DA Access Service Call					0.00000										
	DIRECTORY ASSISTANCE DATA BASE SERVICE (DADS)															
	Directory Assistance Data Base Service Charge Per Listing	I				0.04										
	Directory Assistance Data Base Service, per month	I			DBSOF	150.00										
BRANDING - DIRECTORY ASSISTANCE																
	Facility Based CLEC															
	Recording and Provisioning of DA Custom Branded Announcement			AMT	CBADA		1,555.00	1,553.00								
	Loading of Custom Branded Announcement per DRAM Card/Switch			AMT	CBADC		240.71	240.71								
	UNEP CLEC															
	Recording of DA Custom Branded Announcement	I					3,000.00	3,000.00								
	Loading of DA Custom Branded Announcement per DRAM Card/Switch per OCN	I					1,170.00	1,170.00								
	Unbranding via OLNS for UNEP CLEC															
	Loading of DA per OCN (1 OCN per Order)	I					420.00	420.00								
	Loading of DA per Switch per OCN	I					16.00	16.00								
SELECTIVE ROUTING																
	Selective Routing Per Unique Line Class Code Per Request Per Switch				USRCR		179.60	179.60					30.89	7.03		
VIRTUAL COLLOCATION																
	Virtual Collocation 2-Wire Cross Connect, Exchange Port 2-Wire Voice Grade Res	I		UEPRX	PE1R2	0.30	19.20	19.20					19.99	19.99	19.99	19.99
	Virtual Collocation 2-Wire Cross Connect, Exchange Port 2-Wire Line Side PBX Trunk - Bus	I		UEPSP	VE1R2	0.30	19.20	19.20					19.99	19.99	19.99	19.99
	Virtual Collocation 2-Wire Cross Connect, Exchange Port 2-Wire Voice Grade PBX Trunk - Res	I		UEPSE	VE1R2	0.30	19.20	19.20					19.99	19.99	19.99	19.99
	Virtual Collocation 2-Wire Cross Connect, Exchange Port 2-Wire Analog Bus	I		UEPSB	VE1R2	0.30	19.20	19.20					19.99	19.99	19.99	19.99
	Virtual Collocation 2-Wire Cross Connect, Exchnage Port 2-Wire ISDN	I		UEPSX	VE1R2	0.30	19.20	19.20					19.99	19.99	19.99	19.99
	Virtual Collocation 2-Wire Cross Connect, Exchange Port 2-Wire ISDN	I		UEPTX	VE1R2	0.30	19.20	19.20					19.99	19.99	19.99	19.99
	Virtual Collocation 4-Wire Cross Connect, Exchange Port DDITS 4-Wire DS1	I		UEPDD	VE1R4	0.50	19.20	19.20					19.99	19.99	19.99	19.99
	Virtual Collocation 4-Wire Cross Connect, Exchange Port 4-Wire ISDN DS1	I		UEPEX	VE1R4	0.50	19.20	19.20					19.99	19.99	19.99	19.99
	Virtual Collocation - 2-Fiber Cross Connects	I		CLO	CNC2F	15.64	41.56	29.82								
	Virtual Collocation - 4-Fiber Cross Connects	I		CLO	CNC4F	28.11	50.53	38.78								
	Virtual Collocatin - DS1 Cross Connects	I		USL,ULC,CLO	CNC1X	1.319	32.22	17.76	10.46	8.75						
	Virtual Collocation - Co-Carrier Cross Connects - Fiber Cable Support Structure, per linear foot	I		AMTFS	PE1ES	0.0031										
	Virtual Collocation - Co-Carrier Cross Connects - Copper/Coax Cable Support Structure, per linear ft	I		AMTFS	PE1DS	0.0045										
	Virtual Collocation - Co-Carrier Cross Connects - Fiber Cable Support Structure,per cable	I		AMTFS			555.03									
	Virtual Collocation - Co-Carrier Cross Connects - Copper/Coax Cable Support Structure, per cable	I		AMTFS			555.03									
AIN SELECTIVE CARRIER ROUTING																
	Regional Service Establishment	I		SRC	SRCEC		391,788.00						19.99	19.99	19.99	19.99

BellSouth/MCIm
TENNESSEE
Rates
For
Network Elements

CATEGORY	UNBUNDLED NETWORK ELEMENT	Interim	Zone	BCS	USOC	RATES ($)					OSS RATES ($)					
							Nonrecurring		Nonrecurring Disconnect		Svc Order Submitted Elec per LSR	Svc Order Submitted Manually per LSR	Incremental Charge - Manual Svc Order vs. Electronic-1st	Incremental Charge - Manual Svc Order vs. Electronic-Add'l	Incremental Charge - Manual Svc Order vs. Electronic-Disc 1st	Incremental Charge - Manual Svc Order vs. Electronic-Disc Add'l
						Rec	First	Add'l	First	Add'l	SOMEC	SOMAN	SOMAN	SOMAN	SOMAN	SOMAN
	End Office Establishment	I		SRC	SRCEO		320.53	320.53					19.99	19.99	19.99	19.99
	Line/Port NRC, per end user	I		SRC	SRCLP		2.06	2.06					19.99	19.99	19.99	19.99
	Query NRC, per query			SRC		0.000448										
AIN - BELLSOUTH AIN SMS ACCESS SERVICE																
	AIN SMS Access Service - Service Establishment, Per State, Initial Setup				CAMSE		135.56	135.56					20.35	20.35	13.28	13.28
	AIN SMS Access Service - Port Connection - Dial/Shared Access				CAMDP		41.75	41.75					20.35	20.35	13.28	13.28
	AIN SMS Access Service - Port Connection - ISDN Access				CAM1P		41.75	41.75					20.35	20.35	13.28	13.28
	AIN SMS Access Service - User Identification Codes - Per User ID Code				CAMAU		96.63	96.63					20.35	20.35	13.28	13.28
	AIN SMS Access Service - Security Card, Per User ID Code, Initial or Replacement				CAMRC		113.67	113.67					20.35	20.35	13.28	13.28
	AIN SMS Access Service - Storage, Per Unit (100 Kilobytes)					0.0024										
	AIN SMS Access Service - Session, Per Minute					0.0820123										
	AIN SMS Access Service - Company Performed Session, Per Minute					2.27										
AIN - BELLSOUTH AIN TOOLKIT SERVICE																
	AIN Toolkit Service - Service Establishment Charge, Per State, Initial Setup				BAPSC		132.04	132.04					20.35	20.35	13.28	13.28
	AIN Toolkit Service - Training Session, Per Customer				BAPVX		7,915.00	7,915.00					20.35	20.35	13.28	13.28
	AIN Toolkit Service - Trigger Access Charge, Per Trigger, Per DN, Term. Attempt				BAPTT		31.21	31.21					20.35	20.35	13.28	13.28
	AIN Toolkit Service - Trigger Access Charge, Per Trigger, Per DN, Off-Hook Delay				BAPTD		31.21	31.21					20.35	20.35	13.28	13.28
	AIN Toolkit Service - Trigger Access Charge, Per Trigger, Per DN, Off-Hook Immediate				BAPTM		31.21	31.21					20.35	20.35	13.28	13.28
	AIN Toolkit Service - Trigger Access Charge, Per Trigger, Per DN, 10-Digit PODP				BAPTO		85.24	85.24					20.35	20.35	13.28	13.28
	AIN Toolkit Service - Trigger Access Charge, Per Trigger, Per DN, CDP				BAPTC		85.24	85.24					20.35	20.35	13.28	13.28
	AIN Toolkit Service - Trigger Access Charge, Per Trigger, Per DN, Feature Code				BAPTF		85.24	85.24					20.35	20.35	13.28	13.28
	AIN Toolkit Service - Query Charge, Per Query					0.0211882										
	AIN Toolkit Service - Type 1 Node Charge, Per AIN Toolkit Subscription, Per Node, Per Query					0.0054774										
	AIN Toolkit Service - SCP Storage Charge, Per SMS Access Account, Per 100 Kilobytes					1.50										
	AIN Toolkit Service - Monthly report - Per AIN Toolkit Service Subscription				BAPMS	17.43	33.52	33.52					20.35	20.35	13.28	13.28
	AIN Toolkit Service - Special Study - Per AIN Toolkit Service Subscription				BAPLS	0.1321116	36.23	36.23					20.35	20.35	13.28	13.28
	AIN Toolkit Service - Call Event Report - Per AIN Toolkit Service Subscription				BAPDS	17.35	33.52	33.52					20.35	20.35	13.28	13.28
	AIN Toolkit Service - Call Event Special Study - Per AIN Toolkit Service Subscription				BAPES	0.0511435	36.23	36.23					20.35	20.35	13.28	13.28
ODUF/EDOUF/ADUF/CMDS																
	ADUF: Message Processing, per message	1				0.004										
	ADUF: Data Transmission (CONNECT:DIRECT), per message	1				0.001										
	EODUF: Message Processing, per message	1				0.004										
	OPTIONAL DAILY USAGE FILE (ODUF)															
	ODUF: Recording, per message					0.0000044										
	ODUF: Message Processing, per message					0.0027366										
	ODUF: Message Processing, per Magnetic Tape provisioned					52.75										
	ODUF: Data Transmission (CONNECT:DIRECT), per message					0.0000339										
ENHANCED EXTENDED LINK (EELs)																
	NOTE: New EELs available in State of Georgia, density zone 1 of following SMAs: Orlando, FL; Miami, FL; Ft. Lauderdale, FLl; Nashville, TN; New Orleans, LA;															
	NOTE: In all states, EEL network elements shown below also apply to currently combined facilities which are converted to UNE rates. A Switch As Is Charge applies to currently combined facilities converted to UNEs.(Non-recurring rates do not apply.)															
	NOTE: In GA, TN, KY, & LA, the EEL network elements apply to ordinarily combined network elements.(No Switch As Is Charge.)															
	2-WIRE VOICE GRADE EXTENDED LOOP WITH DEDICATED DS1 INTEROFFICE TRANSPORT (EEL)															

BellSouth/MCIm
TENNESSEE
Rates
For
Network Elements

CATEGORY	UNBUNDLED NETWORK ELEMENT	Interim	Zone	BCS	USOC	RATES ($)					OSS RATES ($)					
							Nonrecurring		Nonrecurring Disconnect		Svc Order Submitted Elec per LSR	Svc Order Submitted Manually per LSR	Incremental Charge - Manual Svc Order vs. Electronic-1st	Incremental Charge - Manual Svc Order vs. Electronic-Add'l	Incremental Charge - Manual Svc Order vs. Electronic-Disc 1st	Incremental Charge - Manual Svc Order vs. Electronic-Disc Add'l
						Rec	First	Add'l	First	Add'l	SOMEC	SOMAN	SOMAN	SOMAN	SOMAN	SOMAN
	First 2-Wire VG Loop(SL2) in a DS1 Interofficed Transport Combination - Zone 1	I	1	UNCVX	UEAL2	16.56	108.76	35.47	72.94	10.86			20.35	21.09	9.80	10.54
	First 2-Wire VG Grade Loop(SL2) in a DS1 Interofficed Transport Combination - Zone 2	I	2	UNCVX	UEAL2	21.63	108.76	35.47	72.94	10.86			20.35	21.09	9.80	10.54
	First 2-Wire VG Grade Loop(SL2) in a DS1 Interofficed Transport Combination - Zone 3	I	3	UNCVX	UEAL2	28.28	108.76	35.47	72.94	10.86			20.35	21.09	9.80	10.54
	Interoffice Transport - Dedicated - DS1 combination - Per Mile per month	I		UNC1X	1L5XX	0.3525										
	Interoffice Transport - Dedicated - DS1 combination - Facility Termination per month	I		UNC1X	U1TF1	77.86	171.24	113.12	70.07	30.90			20.35	21.09	9.80	10.54
	DS1 Channelization System Per Month	I		UNC1X	MQ1	80.77	214.52	49.95	75.98	13.60			20.35	21.09	9.80	10.54
	Voice Grade COCI - DS1 To Ds0 Interface - Per Month	I		UNCVX	1D1VG	0.91	5.70	4.42								
	Each Additional 2-Wire VG Loop(SL 2) in the same DS1 Interoffice Transport Combination - Zone 1	I	1	UNCVX	UEAL2	16.56	108.76	35.47	72.94	10.86			20.35	21.09	9.80	10.54
	Each Additional 2-Wire VG Loop(SL2) in the same DS1 Interoffice Transport Combination - Zone 2	I	2	UNCVX	UEAL2	21.63	108.76	35.47	72.94	10.86			20.35	21.09	9.80	10.54
	Each Additional 2-Wire VG Loop(SL2) in the same DS1 Interoffice Transport Combination - Zone 3	I	3	UNCVX	UEAL2	28.28	108.76	35.47	72.94	10.86			20.35	21.09	9.80	10.54
	Voice Grade COCI - DS1 to DS0 Channel System combination - per month	I		UNCVX	1D1VG	0.91	5.70	4.42								
	Nonrecurring Currently Combined Network Elements Switch -As-Is Charge			UNC1X	UNCCC		52.73	24.62	9.12	9.12			20.35	21.09	9.80	10.54
4-WIRE VOICE GRADE EXTENDED LOOP WITH DEDICATED DS1 INTEROFFICE TRANSPORT (EEL)																
	First 4-Wire Analog Voice Grade Loop in a DS1 Interoffice Transport Combination - Zone 1	I	1	UNCVX	UEAL4	24.70	108.76	35.47	72.94	10.86			20.35	21.09	9.80	10.54
	First 4-Wire Analog Voice Grade Loop in a DS1 Interoffice Transport Combination - Zone 2	I	2	UNCVX	UEAL4	32.25	108.76	35.47	72.94	10.86			20.35	21.09	9.80	10.54
	First 4-Wire Analog Voice Grade Loop in a DS1 Interoffice Transport Combination - Zone 3	I	3	UNCVX	UEAL4	42.17	108.76	35.47	72.94	10.86			20.35	21.09	9.80	10.54
	Interoffice Transport - Dedicated - DS1 combination - Per Mile Per Month	I		UNC1X	1L5XX	0.3525										
	Interoffice Transport - Dedicated - DS1 - Facility Termination Per Month	I		UNC1X	U1TF1	77.86	171.24	113.12	70.07	30.90			20.35	21.09	9.80	10.54
	Channelization - Channel System DS1 to DS0 combination Per Month	I		UNC1X	MQ1	80.77	214.52	49.95	75.98	13.60						
	Voice Grade COCI - DS1 to DS0 Channel System combination - per month	I		UNCVX	1D1VG	0.91	5.70	4.42								
	Additional 4-Wire Analog Voice Grade Loop in same DS1 Interoffice Transport Combination - Zone 1	I	1	UNCVX	UEAL4	24.70	108.76	35.47	72.94	10.86			20.35	21.09	9.80	10.54
	Additional 4-Wire Analog Voice Grade Loop in same DS1 Interoffice Transport Combination - Zone 2	I	2	UNCVX	UEAL4	32.25	108.76	35.47	72.94	10.86			20.35	21.09	9.80	10.54
	Additional 4-Wire Analog Voice Grade Loop in same DS1 Interoffice Transport Combination - Zone 3	I	3	UNCVX	UEAL4	42.17	108.76	35.47	72.94	10.86			20.35	21.09	9.80	10.54
	Voice Grade COCI - DS1 to DS0 Channel System combination - per month	I		UNCVX	1D1VG	0.91	5.70	4.42								
	Nonrecurring Currently Combined Network Elements Switch -As-Is Charge			UNC1X	UNCCC		52.73	24.62	9.12	9.12			20.35	21.09	9.80	10.54
4-WIRE 56 KBPS EXTENDED DIGITAL LOOP WITH DEDICATED DS1 INTEROFFICE TRANSPORT (EEL)																
	First 4-Wire 56Kbps Digital Grade Loop in a DS1 Interoffice Transport Combination - Zone 1	I	1	UNCDX	UDL56	31.10	108.76	35.47	72.94	10.86			20.35	21.09	9.80	10.54
	First 4-wire 56Kbps Digital Grade Loop in a DS1 Interoffice Transport Combination - Zone 2	I	2	UNCDX	UDL56	40.61	108.76	35.47	72.94	10.86			20.35	21.09	9.80	10.54
	First 4-Wire 56Kbps Digital Grade Loop in a DS1 Interoffice Transport Combination - Zone 3	I	3	UNCDX	UDL56	53.11	108.76	35.47	72.94	10.86			20.35	21.09	9.80	10.54
	Interoffice Transport - Dedicated - DS1 combination - Per Mile Per Month	I		UNC1X	1L5XX	0.3525										
	Interoffice Transport - Dedicated - DS1 - combination Facility Termination Per Month	I		UNC1X	U1TF1	77.86	171.24	113.12	70.07	30.90			20.35	21.09	9.80	10.54
	Channelization - Channel System DS1 to DS0 combination Per Month	I		UNC1X	MQ1	80.77	214.52	49.95	75.98	13.60						
	OCU-DP COCI (data) - DS1 to DS0 Channel System - per month (2.4-64kbs)	I		UNCDX	1D1DD	1.82	5.70	4.42								
	Additional 4-Wire 56Kbps Digital Grade Loopin same DS1 Interoffice Transport Combination - Zone 1	I	1	UNCDX	UDL56	31.10	108.76	35.47	72.94	10.86			20.35	21.09	9.80	10.54
	Additional 4-Wire 56Kbps Digital Grade Loopin same DS1 Interoffice Transport Combination - Zone 2	I	2	UNCDX	UDL56	40.61	108.76	35.47	72.94	10.86			20.35	21.09	9.80	10.54
	Additional 4-Wire 56Kbps Digital Grade Loopin same DS1 Interoffice Transport Combination - Zone 3	I	3	UNCDX	UDL56	53.11	108.76	35.47	72.94	10.86			20.35	21.09	9.80	10.54
	OCU-DP COCI (data) - DS1 to DS0 Channel System - combination per month (2.4-64kbs)	I		UNCDX	1D1DD	1.82	5.70	4.42								
	Nonrecurring Currently Combined Network Elements Switch -As-Is Charge			UNC1X	UNCCC		52.73	24.62	9.12	9.12			20.35	21.09	9.80	10.54
4-WIRE 64 KBPS EXTENDED DIGITAL LOOP WITH DEDICATED DS1 INTEROFFICE TRANSPORT (EEL)																

BellSouth/MCIm
TENNESSEE
Rates
For
Network Elements

CATEGORY	UNBUNDLED NETWORK ELEMENT	Interim	Zone	BCS	USOC	RATES ($)					OSS RATES ($)					
							Nonrecurring		Nonrecurring Disconnect							
						Rec	First	Add'l	First	Add'l	Svc Order Submitted Elec per LSR	Svc Order Submitted Manually per LSR	Incremental Charge - Manual Svc Order vs. Electronic-1st	Incremental Charge - Manual Svc Order vs. Electronic-Add'l	Incremental Charge - Manual Svc Order vs. Electronic-Disc 1st	Incremental Charge - Manual Svc Order vs. Electronic-Disc Add'l
											SOMEC	SOMAN	SOMAN	SOMAN	SOMAN	SOMAN
	First 4-Wire 64Kbps Digital Grade Loop in a DS1 Interoffice Transport Combination - Zone 1	I	1	UNCDX	UDL64	31.10	108.76	35.47	72.94	10.86			20.35	21.09	9.80	10.54
	First 4-Wire 64Kbps Digital Grade Loop in a DS1 Interoffice Transport Combination - Zone 2	I	2	UNCDX	UDL64	40.61	108.76	35.47	72.94	10.86			20.35	21.09	9.80	10.54
	First 4-Wire 64Kbps Digital Grade Loop in a DS1 Interoffice Transport Combination - Zone 3	I	3	UNCDX	UDL64	53.11	108.76	35.47	72.94	10.86			20.35	21.09	9.80	10.54
	Interoffice Transport - Dedicated - DS1 combination - Per Mile Per Month	I		UNC1X	1L5XX	0.3525										
	Interoffice Transport - Dedicated - DS1 combination - Facility Termination Per Month	I		UNC1X	U1TF1	77.86	171.24	113.12	70.07	30.90			20.35	21.09	9.80	10.54
	Channelization - Channel System DS1 to DS0 combination Per Month	I		UNC1X	MQ1	80.77	214.52	49.95	75.98	13.60			20.35	21.09	9.80	10.54
	OCU-DP COCI (data) - DS1 to DS0 Channel System combination - per month (2.4-64kbs)	I		UNCDX	1D1DD	1.82	5.70	4.42								
	Additional 4-Wire 64Kbps Digital Grade Loopin same DS1 Interoffice Transport Combination - Zone 1	I	1	UNCDX	UDL64	31.10	108.76	35.47	72.94	10.86			20.35	21.09	9.80	10.54
	Additional 4-Wire 64Kbps Digital Grade Loopin same DS1 Interoffice Transport Combination - Zone 2	I	2	UNCDX	UDL64	40.61	108.76	35.47	72.94	10.86			20.35	21.09	9.80	10.54
	Additional 4-Wire 64Kbps Digital Grade Loopin same DS1 Interoffice Transport Combination - Zone 3	I	3	UNCDX	UDL64	53.11	108.76	35.47	72.94	10.86			20.35	21.09	9.80	10.54
	OCU-DP COCI (data) - DS1 to DS0 Channel System combination - per month (2.4-64kbs)	I		UNCDX	1D1DD	1.82	5.70	4.42								
	Nonrecurring Currently Combined Network Elements Switch -As-Is Charge			UNC1X	UNCCC		52.73	24.62	9.12	9.12			20.35	21.09	9.80	10.54
4-WIRE DS1 DIGITAL EXTENDED LOOP WITH DEDICATED DS1 INTEROFFICE TRANSPORT (EEL)																
	4-Wire DS1 Digital Loop in Combination with DS1 Interoffice Transport - Zone 1	I	1	UNC1X	USLXX	57.73	228.40	161.74	79.87	24.88			20.35	21.09	9.80	10.54
	4-Wire DS1 Digital Loop in Combination with DS1 Interoffice Transport - Zone 2	I	2	UNC1X	USLXX	75.40	228.40	161.74	79.87	24.88			20.35	21.09	9.80	10.54
	4-Wire DS1 Digital Loop in Combination with DS1 Interoffice Transport - Zone 3	I	3	UNC1X	USLXX	98.59	228.40	161.74	79.87	24.88			20.35	21.09	9.80	10.54
	Interoffice Transport - Dedicated - DS1 combination - Per Mile Per Month	I		UNC1X	1L5XX	0.3525										
	Interoffice Transport - Dedicated - DS1 combination - Facility Termination Per Month	I		UNC1X	U1TF1	77.86	171.24	113.12	70.07	30.90			20.35	21.09	9.80	10.54
	Nonrecurring Currently Combined Network Elements Switch -As-Is Charge			UNC1X	UNCCC		52.73	24.62	9.12	9.12			20.35	21.09	9.80	10.54
4-WIRE DS1 DIGITAL EXTENDED LOOP WITH DEDICATED DS3 INTEROFFICE TRANSPORT (EEL)																
	First DS1Loop in DS3 Interoffice Transport Combination - Zone 1	I	1	UNC1X	USLXX	57.73	228.40	161.74	79.87	24.88			20.35	21.09	9.80	10.54
	First DS1Loop in DS3 Interoffice Transport Combination - Zone 2	I	2	UNC1X	USLXX	75.40	228.40	161.74	79.87	24.88			20.35	21.09	9.80	10.54
	First DS1Loop in DS3 Interoffice Transport Combination - Zone 3	I	3	UNC1X	USLXX	98.59	228.40	161.74	79.87	24.88			20.35	21.09	9.80	10.54
	Interoffice Transport - Dedicated - DS3 combination - Per Mile Per Month			UNC3X	1L5XX	2.34										
	Interoffice Transport - Dedicated - DS3 - Facility Termination per month	I		UNC3X	U1TF3	848.99	428.10	153.81	64.43	35.43			20.35	21.09	9.80	10.54
	DS3 to DS1 Channel System combination per month	I		UNC3X	MQ3	222.98	319.48	126.63	45.53	17.05						
	DS3 Interface Unit (DS1 COCI) combination per month	I		UNC1X	UC1D1	17.58	6.52	2.58								
	Additional DS1Loop in DS3 Interoffice Transport Combination - Zone 1	I	1	UNC1X	USLXX	57.73	228.40	161.74	79.87	24.88			20.35	21.09	9.80	10.54
	Additional DS1Loop in DS3 Interoffice Transport Combination - Zone 2	I	2	UNC1X	USLXX	75.40	228.40	161.74	79.87	24.88			20.35	21.09	9.80	10.54
	Additional DS1Loop in DS3 Interoffice Transport Combination - Zone 3	I	3	UNC1X	USLXX	98.59	228.40	161.74	79.87	24.88			20.35	21.09	9.80	10.54
	DS3 Interface Unit (DS1 COCI) combination per month	I		UNC1X	UC1D1	17.58	6.52	2.58								
	Nonrecurring Currently Combined Network Elements Switch -As-Is Charge			UNC3X	UNCCC		52.73	24.62	9.12	9.12			20.35	21.09	9.80	10.54
2-WIRE VOICE GRADE EXTENDED LOOP/ 2 WIRE VOICE GRADE INTEROFFICE TRANSPORT (EEL)																
	2-WireVG Loop used with 2-wire VG Interoffice Transport Combination - Zone 1	I	1	UNCVX	UEAL2	16.56	108.76	35.47	72.94	10.86			20.35	21.09	9.80	10.54
	2-WireVG Loop used with 2-wire VG Interoffice Transport Combination - Zone 2	I	2	UNCVX	UEAL2	21.63	108.76	35.47	72.94	10.86			20.35	21.09	9.80	10.54
	2-WireVG Loop used with 2-wire VG Interoffice Transport Combination - Zone 3	I	3	UNCVX	UEAL2	28.28	108.76	35.47	72.94	10.86			20.35	21.09	9.80	10.54
	Interoffice Transport - Dedicated - 2-wire VG combination - Per Mile Per Month			UNCVX	1L5XX	0.0174										
	Interoffice Transport - Dedicated - 2- Wire Voice Grade combination - Facility Termination per month	I		UNCVX	U1TV2	18.58	79.86	44.06	69.32	31.00			20.35	21.09	9.80	10.54
	Nonrecurring Currently Combined Network Elements Switch -As-Is Charge			UNCVX	UNCCC		52.73	24.62	9.12	9.12			20.35	21.09	9.80	10.54
4-WIRE VOICE GRADE EXTENDED LOOP/ 4 WIRE VOICE GRADE INTEROFFICE TRANSPORT (EEL)																
	4-WireVG Loop used with 4-wire VG Interoffice Transport Combination - Zone 1	I	1	UNCVX	UEAL4	24.70	108.75	35.47	72.94	10.85			20.35	21.09	9.80	10.54
	4-WireVG Loop used with 4-wire VG Interoffice Transport Combination - Zone 2	I	2	UNCVX	UEAL4	32.25	108.75	35.47	72.94	10.85			20.35	21.09	9.80	10.54
	4-WireVG Loop used with 4-wire VG Interoffice Transport Combination - Zone 3	I	3	UNCVX	UEAL4	42.17	108.75	35.47	72.94	10.85			20.35	21.09	9.80	10.54
	Interoffice Transport - Dedicated - 4-wire VG combination - Per Mile Per Month			UNCVX	1L5XX	0.0054										
	Interoffice Transport - Dedicated - 4- Wire Voice Grade combination - Facility Termination per month	I		UNCVX	U1TV4	24.09	79.83	44.08	69.32	31.00			20.35	21.09	9.80	10.54

BellSouth/MCIm
TENNESSEE
Rates
For
Network Elements

CATEGORY	UNBUNDLED NETWORK ELEMENT	Interim	Zone	BCS	USOC	RATES ($)					OSS RATES ($)					
							Nonrecurring		Nonrecurring Disconnect		Svc Order Submitted Elec per LSR	Svc Order Submitted Manually per LSR	Incremental Charge - Manual Svc Order vs. Electronic-1st	Incremental Charge - Manual Svc Order vs. Electronic-Add'l	Incremental Charge - Manual Svc Order vs. Electronic-Disc 1st	Incremental Charge - Manual Svc Order vs. Electronic-Disc Add'l
						Rec	First	Add'l	First	Add'l	SOMEC	SOMAN	SOMAN	SOMAN	SOMAN	SOMAN
	Nonrecurring Currently Combined Network Elements Switch -As-Is Charge			UNCVX	UNCCC		52.73	24.62	9.12	9.12			20.35	21.09	9.80	10.54
DS3 DIGITAL EXTENDED LOOP WITH DEDICATED DS3 INTEROFFICE TRANSPORT (EEL)																
	High Capacity Unbundled Local Loop - DS3 combination - Per Mile per month	I		UNC3X	1L5ND	9.19										
	High Capacity Unbundled Local Loop - DS3 combination - Facility Termination per month	I		UNC3X	UE3PX	374.24	240.23	180.87	106.78	45.24						
	Interoffice Transport - Dedicated - DS3 - Per Mile per month			UNC3X	1L5XX	2.34										
	Interoffice Transport - Dedicated - DS3 combination - Facility Termination per per month	I		UNC3X	U1TF3	848.99	428.01	153.81	64.43	35.43			20.35	21.09	9.80	10.54
	Nonrecurring Currently Combined Network Elements Switch -As-Is Charge			UNC3X	UNCCC		52.73	24.62	9.12	9.12			20.35	21.09	9.80	10.54
STS1 DIGITAL EXTENDED LOOP WITH DEDICATED STS1 INTEROFFICE TRANSPORT (EEL)																
	High Capacity Unbundled Local Loop - STS1 combination - Per Mile per month	I		UNCSX	1L5ND	9.19										
	High Capacity Unbundled Local Loop - STS1 combination - Facility Termination per month	I		UNCSX	UDLS1	389.35	240.23	180.87	106.78	45.24						
	Interoffice Transport - Dedicated - STS1 combination - Per Mile per month			UNCSX	1L5XX	2.34										
	Interoffice Transport - Dedicated - STS1 combination - Facility Termination per month	I		UNCSX	U1TFS	849.30	428.01	153.81	64.43	35.43			20.35	21.09	9.80	10.54
	Nonrecurring Currently Combined Network Elements Switch -As-Is Charge			UNCSX	UNCCC		52.73	24.62	9.12	9.12			20.35	21.09	9.80	10.54
2-WIRE ISDN EXTENDED LOOP WITH DS1 INTEROFFICE TRANSPORT (EEL)																
	First 2-Wire ISDN Loop in a DS1 Interoffice Combination Transport - Zone 1	I	1	UNCNX	U1L2X	22.00	108.76	35.47	72.94	10.86			20.35	21.09	9.80	10.54
	First 2-Wire ISDN Loop in a DS1 Interoffice Combination Transport - Zone 2	I	2	UNCNX	U1L2X	29.02	108.76	35.47	72.94	10.86			20.35	21.09	9.80	10.54
	First 2-Wire ISDN Loop in a DS1 Interoffice Combination Transport - Zone 3	I	3	UNCNX	U1L2X	37.95	108.76	35.47	72.94	10.86			20.35	21.09	9.80	10.54
	Interoffice Transport - Dedicated - DS1 combination - Per Mile	I		UNC1X	1L5XX	0.3525										
	Interoffice Transport - Dedicated - DS1 combintion - Facility Termination per month	I		UNC1X	U1TF1	77.86	171.24	113.12	70.07	30.90			20.35	21.09	9.80	10.54
	Channelization - Channel System DS1 to DS0 combination - per month	I		UNC1X	MQ1	80.77	49.95	75.98	13.60							
	2-wire ISDN COCI (BRITE) - DS1 to DS0 Channel System combination - per month	I		UNCNX	UC1CA	3.10	6.16	0.60								
	Additional 2-wire IDSN Loop in same DS1Interoffice Transport Combination - Zone 1	I	1	UNCNX	U1L2X	22.00	108.76	35.47	72.94	10.86			20.35	21.09	9.80	10.54
	Additional 2-wire IDSN Loop in same DS1Interoffice Transport Combination - Zone 2	I	2	UNCNX	U1L2X	29.02	108.76	35.47	72.94	10.86			20.35	21.09	9.80	10.54
	Additional 2-wire IDSN Loop in same DS1Interoffice Transport Combination - Zone 3	I	3	UNCNX	U1L2X	37.95	108.76	35.47	72.94	10.86			20.35	21.09	9.80	10.54
	2-wire ISDN COCI (BRITE) - DS1 to DS0 Channel System combintaion- per month	I		UNCNX	UC1CA	3.10	6.16	0.60								
	Nonrecurring Currently Combined Network Elements Switch -As-Is Charge			UNC1X	UNCCC		52.73	24.62	9.12	9.12			20.35	21.09	9.80	10.54
4-WIRE DS1 DIGITAL EXTENDED LOOP WITH DEDICATED STS-1 INTEROFFICE TRANSPORT (EEL)																
	First DS1 Loop in STS1 Interoffice Transport Combination - Zone 1	I	1	UNC1X	USLXX	57.73	228.40	161.74	79.87	24.88			20.35	21.09	9.80	10.54
	First DS1 Loop in STS1 Interoffice Transport Combination - Zone 2	I	2	UNC1X	USLXX	75.40	228.40	161.74	79.87	24.88			20.35	21.09	9.80	10.54
	First DS1 Loop in STS1 Interoffice Transport Combination - Zone 3	I	3	UNC1X	USLXX	98.59	228.40	161.74	79.87	24.88			20.35	21.09	9.80	10.54
	Interoffice Transport - Dedicated - STS1 combination - Per Mile Per Month			UNCSX	1L5XX	2.34										
	Interoffice Transport - Dedicated - STS1 combination - Facility Termination	I		UNCSX	U1TFS	849.30	426.01	153.61	64.43	35.43			20.35	21.09	9.80	10.54
	STS1 to DS1 Channel System conbination per month	I		UNCSX	MQ3	222.98	428.01	153.81	64.43	25.43						
	DS3 Interface Unit (DS1 COCI) combination per month	I		UNC1X	UC1D1	17.58	5.70	4.42								
	Additional DS1Loop in STS1 Interoffice Transport Combination - Zone 1	I	1	UNC1X	USLXX	57.73	228.40	161.74	79.87	24.88			20.35	21.09	9.80	10.54
	Additional DS1Loop in STS1 Interoffice Transport Combination - Zone 2	I	2	UNC1X	USLXX	75.40	228.40	161.74	79.87	24.88			20.35	21.09	9.80	10.54
	Additional DS1Loop in STS1 Interoffice Transport Combination - Zone 3	I	3	UNC1X	USLXX	98.59	228.40	161.74	79.87	24.88			20.35	21.09	9.80	10.54
	DS3 Interface Unit (DS1 COCI) combination per month	I		UNC1X	UC1D1	17.58	5.70	4.42								
	Nonrecurring Currently Combined Network Elements Switch -As-Is Charge	I		UNCSX	UNCCC		52.73	24.62	9.12	9.12			20.35	21.09	9.80	10.54
4-WIRE 56 KBPS DIGITAL EXTENDED LOOP WITH 56 KBPS INTEROFFICE TRANSPORT (EEL)																
	4-wire 56 kbps Loop/4-wire 56 kbps Interoffice Transport Combination - Zone 1	I	1	UNCDX	UDL56	31.10	108.76	35.47	72.94	10.86			20.35	21.09	9.80	10.54
	4-wire 56 kbps Loop/4-wire 56 kbps Interoffice Transport Combination - Zone 2	I	2	UNCDX	UDL56	40.61	108.76	35.47	72.94	10.86			20.35	21.09	9.80	10.54
	4-wire 56 kbps Loop/4-wire 56 kbps Interoffice Transport Combination - Zone 3	I	3	UNCDX	UDL56	53.11	108.76	35.47	72.94	10.86			20.35	21.09	9.80	10.54
	Interoffice Transport - Dedicated - 4-wire 56 kbps combination - Per Mile			UNCDX	1L5XX	0.174										
	Interoffice Transport - Dedicated - 4-wire 56 kbps combination - Facility Termination	I		UNCDX	U1TD5	22.10	58.54	38.32	13.98	8.59			20.35	21.09	9.80	10.54
	Nonrecurring Currently Combined Network Elements Switch -As-Is Charge			UNCDX	UNCCC		52.73	24.62	9.12	9.12			20.35	21.09	9.80	10.54
4-WIRE 64 KBPS DIGITAL EXTENDED LOOP WITH 64 KBPS INTEROFFICE TRANSPORT (EEL)																

BellSouth/MCIm
TENNESSEE
Rates
For
Network Elements

CATEGORY	UNBUNDLED NETWORK ELEMENT	Interim	Zone	BCS	USOC	RATES ($) Rec	Nonrecurring First	Nonrecurring Add'l	Nonrecurring Disconnect First	Nonrecurring Disconnect Add'l	OSS RATES ($) Svc Order Submitted Elec per LSR SOMEC	Svc Order Submitted Manually per LSR SOMAN	Incremental Charge - Manual Svc Order vs. Electronic-1st SOMAN	Incremental Charge - Manual Svc Order vs. Electronic-Add'l SOMAN	Incremental Charge - Manual Svc Order vs. Electronic-Disc 1st SOMAN	Incremental Charge - Manual Svc Order vs. Electronic-Disc Add'l SOMAN
	4-wire 64 kbps Loop/4-wire 64 kbps Interoffice Transport Combination - Zone 1	I	1	UNCDX	UDL64	31.10	108.76	35.47	72.94	10.86			20.35	21.09	9.80	10.54
	4-wire 64 kbps Loop/4-wire 64 kbps Interoffice Transport Combination - Zone 2	I	2	UNCDX	UDL64	40.61	108.76	35.47	72.94	10.86			20.35	21.09	9.80	10.54
	4-wire 64 kbps Loop/4-wire 64 kbps Interoffice Transport Combination - Zone 3	I	3	UNCDX	UDL64	53.11	108.76	35.47	72.94	10.86			20.35	21.09	9.80	10.54
	Interoffice Transport - Dedicated - 4-wire 64 kbps combination - Per Mile			UNCDX	1L5XX	0.174										
	Interoffice Transport - Dedicated - 4-wire 64 kbps combination - Facility Termination	I		UNCDX	U1TD6	22.10	58.54	38.32	13.98	8.59			20.35	21.09	9.80	10.54
	Nonrecurring Currently Combined Network Elements Switch -As-Is Charge			UNCDX	UNCCC		52.73	24.62	9.12	9.12			20.35	21.09	9.80	10.54
ADDITIONAL NETWORK ELEMENTS																
	When used as a part of a currently combined facility, the non-recurrng charges do not apply, but a Switch As Is charge does apply.															
	When used as ordinarilty combined network elements in Georgia, the non-recurring charges apply and the Switch As Is Charge does not.															
	Node (SynchroNet)															
	Node per month	I		UNCDX	UNCNT	17.11										
	Nonrecurring Currently Combined Network Elements "Switch As Is" Charge (One applies to each combination)															
	2/4-Wire VG Interoffice Channel used in a COMBINATION - "Switch As Is" Conversion Charge			UNCVX	UNCCC		52.73	24.62	9.12	9.12			20.35	21.09	9.80	10.54
	56/64 kbps Interoffice Channel used in a COMBINATION - "Switch As Is" Conversion Charge			UNCDX	UNCCC		52.73	24.62	9.12	9.12			20.35	21.09	9.80	10.54
	DS1 Interoffice Channel used in a COMBINATION - "Switch As Is" Conversion Charge			UNC1X	UNCCC		52.73	24.62	9.12	9.12			20.35	21.09	9.80	10.54
	DS3 Interoffice Channel used in a COMBINATION - "Switch As Is" Conversion Charge			UNC3X	UNCCC		52.73	24.62	9.12	9.12			20.35	21.09	9.80	10.54
	STS1 Interoffice or Local Loop used in a COMBINATION - "Switch As Is" Conversion Charge			UNCSX	UNCCC		52.73	24.62	9.12	9.12			20.35	21.09	9.80	10.54
	Local Channel - Dedicated - 2-Wire Voice Grade per month	I		UNCXV	ULDV2	19.43										
	Local Channel - Dedicated - 4-Wire Voice Grade per month	I		UNCXV	ULDV4	20.56										
	Local Channel - Dedicated - DS1 Per Month	I		UNC1X	ULDF1	40.00										
OPERATIONAL SUPPORT SYSTEMS																
	NOTE: (1) Electronic Service Order: CLEC-1 should contact its contract negotiator if it prefers the state specific electronic service ordering charges as ordered by the State Commissions															
	NOTE: (1) Continued: The electronic service ordering charge currently contained in this rate exhibit is the BellSouth regional electronic service ordering charge															
	NOTE: (1) Concluded: CLEC-1 may elect either the state specific Commission ordered rates for the electronic service ordering charges, or CLEC-1 may elect the regional electronic service ordering charge.															
	Electronic OSS Charge, per LSR, submitted via BST's OSS interactive interfaces (Regional)	I			SOMEC		3.50									
	The "Zone" shown in the sections for stand-alone loops or loops as part of a combination refers to Geographically Deaveraged UNE Zones. To view Geographically Deaveraged UNE Zone Designations by Central Office, refer to Internet Website: http://www.interconnection.bellsouth.com/become_a_clec/html/interconnection.htm															
UNBUNDLED LOCAL EXCHANGE SWITCHING(PORTS)																
	Exchange Ports															
	NOTE: Although the Port Rate includes all available features in GA, KY, LA & TN, the desired features will need to be ordered using retail USOCs															
	2-WIRE VOICE GRADE LINE PORT RATES (RES)															
	Exchange Ports - 2-Wire Analog Line Port- Res.			UEPSR	UEPRL	1.89	9.93	9.19	3.66	2.92			20.35	10.54	13.32	1.40
	Exchange Ports - 2-Wire Analog Line Port with Caller ID - Res.			UEPSR	UEPRC	1.89	9.93	9.19	3.66	2.92			20.35	10.54	13.32	1.40
	Exchange Ports - 2-Wire Analog Line Port outgoing only - Res.			UEPSR	UEPRO	1.89	9.93	9.19	3.66	2.92			20.35	10.54	13.32	1.40
	Exchange Ports - 2-Wire VG unbundled TN extended local dialing parity Port with Caller ID - Res.			UEPSR	UEPAQ	1.89	9.93	9.19	3.66	2.92			20.35	10.54	13.32	1.40
	Exchange Ports - 2-Wire VG unbundled Tennessee Area Plus with Caller ID - Res (AC7)			UEPSR	UEPAH	1.89	9.93	9.19	3.66	2.92			20.35	10.54	13.32	1.40

BellSouth/MCIm
TENNESSEE
Rates
For
Network Elements

CATEGORY		UNBUNDLED NETWORK ELEMENT	Interim	Zone	BCS	USOC	RATES ($)					OSS RATES ($)					
								Nonrecurring		Nonrecurring Disconnect							
							Rec	First	Add'l	First	Add'l	Svc Order Submitted Elec per LSR	Svc Order Submitted Manually per LSR	Incremental Charge - Manual Svc Order vs. Electronic-1st	Incremental Charge - Manual Svc Order vs. Electronic-Add'l	Incremental Charge - Manual Svc Order vs. Electronic-Disc 1st	Incremental Charge - Manual Svc Order vs. Electronic-Disc Add'l
												SOMEC	SOMAN	SOMAN	SOMAN	SOMAN	SOMAN
		Exchange Ports - 2-Wire VG unbundled Tennessee Area Calling port with Caller ID - Res (F2R)			UEPSR	UEPAK	1.89	9.93	9.19	3.66	2.92			20.35	10.54	13.32	1.40
		Exchange Ports - 2-Wire VG unbundled Tennessee Area Calling port with Caller ID - Res (TACER)			UEPSR	UEPAL	1.89	9.93	9.19	3.66	2.92			20.35	10.54	13.32	1.40
		Exchange Ports - 2-Wire VG unbundled Tennessee Area Calling port with Caller ID - Res (TACSR)			UEPSR	UEPAM	1.89	9.93	9.19	3.66	2.92			20.35	10.54	13.32	1.40
		Exchange Ports - 2-Wire VG unbundled Tennessee Area Calling port with Caller ID - Res (1MF2X)			UEPSR	UEPAN	1.89	9.93	9.19	3.66	2.92			20.35	10.54	13.32	1.40
		Exchange Ports - 2-Wire VG unbundled Tennessee Area Calling port with Caller ID - Res (2MR)			UEPSR	UEPAO	1.89	9.93	9.19	3.66	2.92			20.35	10.54	13.32	1.40
		Exchange Ports - 2-Wire VG unbundled res, low usage line port with Caller ID (LUM)			UEPSR	UEPAP	1.89	9.93	9.19	3.66	2.92			20.35	10.54	13.32	1.40
		Subsequent Activity			UEPSR	USASC	0.00	0.00	0.00								
	FEATURES																
		All Available Vertical Features			UEPSR	UEPVF	0.00	0.00	0.00					20.35	10.54	13.32	1.40
	2-WIRE VOICE GRADE LINE PORT RATES (BUS)																
		Exchange Ports - 2-Wire Analog Line Port without Caller ID - Bus			UEPSB	UEPBL	1.89	9.93	9.19	3.66	2.92			20.35	10.54	13.32	1.40
		Exchange Ports - 2-Wire VG unbundled Line Port with unbundled port with Caller+E484 ID - Bus.			UEPSB	UEPBC	1.89	9.93	9.19	3.66	2.92			20.35	10.54	13.32	1.40
		Exchange Ports - 2-Wire Analog Line Port outgoing only - Bus.			UEPSB	UEPBO	1.89	9.93	9.19	3.66	2.92			20.35	10.54	13.32	1.40
		Exchange Ports - 2-Wire VG unbundled TN extended local dialing parity Port with Caller ID - Bus.			UEPSB	UEPAV	1.89	9.93	9.19	3.66	2.92			20.35	10.54	13.32	1.40
		Exhange Ports - 2-Wire VG unbundled incoming only port with Caller ID - Bus			UEPSB	UEPB1	1.89	9.93	9.19	3.66	2.92			20.35	10.54	13.32	1.40
		Exchange Ports - 2-Wire VG unbundled TN Bus 2-Way Area Calling Port Economy Option - Bus (TACC1)			UEPSB	UEPAC	1.89	9.93	9.19	3.66	2.92			20.35	10.54	13.32	1.40
		Exchange Ports - 2-Wire VG unbundled TN Bus 2-Way Area Calling Port Standard Option - Bus (TACC2)			UEPSB	UEPAD	1.89	9.93	9.19	3.66	2.92			20.35	10.54	13.32	1.40
		Exchange Ports - 2-W VG unbundled TN Bus 2-Way Collierville & Memphis Local Calling Port - Bus (B2F)			UEPSB	UEPAE	1.89	9.93	9.19	3.66	2.92			20.35	10.54	13.32	1.40
		Subsequent Activity			UEPSB	USASC	0.00	0.00	0.00								
	FEATURES																
		All Available Vertical Features			UEPSB	UEPVF	0.00	0.00	0.00					20.35	10.54	13.32	1.40
	EXCHANGE PORT RATES (DID & PBX)																
		Exchange Ports - 2-Wire DID Port			UEPEX	UEPP2	8.97	47.75	47.01	9.21	8.47			20.35	10.54	13.32	1.40
		Exchange Ports - DDITS Port - 4-Wire DS1 Port with DID capability			UEPDD	UEPDD	35.74	75.93	38.15	8.77	8.04			19.99	19.99	19.99	19.99
		Exchange Ports - 2-Wire ISDN Port (See Notes below.)			UEPTX UEPSX	U1PMA	16.26	30.23	29.49	4.10	4.10			41.43	42.17	9.80	9.80
		Exchange Ports - 2-Wire ISDN Port -- Channel Profiles			UEPTX UEPSX	U1UMA	0.00	0.00	0.00								
		Exchange Ports - 4-Wire ISDN DS1 Port			UEPEX	UEPEX	75.04	148.66	147.18	38.46	36.98			40.69	42.17	9.07	10.54
		2-Wire VG Unbundled 2-Way PBX Trunk - Res			UEPSE	UEPRD	1.79	9.93	9.19	3.66	2.92			20.35	10.54	13.32	1.40
		2-Wire VG Line Side Unbundled 2-Way PBX Trunk - Bus			UEPSP	UEPPC	1.79	9.93	9.19	3.66	2.92			20.35	10.54	13.32	1.40
		2-Wire VG Line Side Unbundled Outward PBX Trunk - Bus			UEPSP	UEPPO	1.79	9.93	9.19	3.66	2.92			20.35	10.54	13.32	1.40
		2-Wire VG Line Side Unbundled Incoming PBX Trunk - Bus			UEPSP	UEPP1	1.79	9.93	9.19	3.66	2.92			20.35	10.54	13.32	1.40
		2-Wire Analog Long Distance Terminal PBX Trunk - Bus			UEPSP	UEPLD	1.79	9.93	9.19	3.66	2.92			20.35	10.54	13.32	1.40
		2-Wire Analog TN 2-Way Calling Plan PBX Trunk - Bus			UEPSP	UEPT2	1.79	9.93	9.19	3.66	2.92			20.35	10.54	13.32	1.40
		2-Wire TN Outward Calling Plan PBX Trunk - Bus			UEPSP	UEPTO	1.79	9.93	9.19	3.66	2.92			20.35	10.54	13.32	1.40
		2-Wire Voice Unbundled PBX LD Terminal Ports			UEPSP	UEPLD	1.79	9.93	9.19	3.66	2.92			20.35	10.54	13.32	1.40
		2-Wire Voice Unbundled 2-Way PBX Tennessee Calling Port			UEPSP	UEPT2	1.79	9.93	9.19	3.66	2.92			20.35	10.54	13.32	1.40
		2-Wire Voice Unbundled 1-Way Outgoing PBX Tennessee Calling Port			UEPSP	UEPTO	1.79	9.93	9.19	3.66	2.92			20.35	10.54	13.32	1.40
		2-Wire Vice Unbundled 2-Way PBX Usage Port			UEPSP	UEPXA	1.79	9.93	9.19	3.66	2.92			20.35	10.54	13.32	1.40
	B.1.7	2-Wire Voice Unbundled PBX Toll Terminal Hotel Ports			UEPSP	UEPXB	1.79	9.93	9.19	3.66	2.92			20.35	10.54	13.32	1.40
	B.1.7	2-Wire Voice Unbundled PBX LD DDD Terminals Port			UEPSP	UEPXC	1.79	9.93	9.19	3.66	2.92			20.35	10.54	13.32	1.40
	B.1.7	2-Wire Voice Unbundled PBX LD Terminal Switchboard Port			UEPSP	UEPXD	1.79	9.93	9.19	3.66	2.92			20.35	10.54	13.32	1.40
	B.1.7	2-Wire Voice Unbundled PBX LD Terminal Switchboard IDD Capable Port			UEPSP	UEPXE	1.79	9.93	9.19	3.66	2.92			20.35	10.54	13.32	1.40

BellSouth/MCIm
TENNESSEE
Rates
For
Network Elements

CATEGORY		UNBUNDLED NETWORK ELEMENT	Interim	Zone	BCS	USOC	RATES ($)					OSS RATES ($)					
								Nonrecurring		Nonrecurring Disconnect		Svc Order Submitted Elec per LSR	Svc Order Submitted Manually per LSR	Incremental Charge - Manual Svc Order vs. Electronic-1st	Incremental Charge - Manual Svc Order vs. Electronic-Add'l	Incremental Charge - Manual Svc Order vs. Electronic-Disc 1st	Incremental Charge - Manual Svc Order vs. Electronic-Disc Add'l
							Rec	First	Add'l	First	Add'l	SOMEC	SOMAN	SOMAN	SOMAN	SOMAN	SOMAN
	B.1.7	2-Wire Voice Unbundled 2-Way PBX Hotel/Hospital Economy Administrative Calling Port			UEPSP	UEPXL	1.79	9.93	9.19	3.66	2.92			20.35	10.54	13.32	1.40
	B.1.7	2-Wire Voice Unbundled 2-Way PBX Hotel/Hospital Economy Room Calling Port			UEPSP	UEPXM	1.79	9.93	9.19	3.66	2.92			20.35	10.54	13.32	1.40
	B.1.7	2-W Voice Unbundled 1-Way Out PBX Hotel/Hospital Economy Administrative Calling Port TN Calling Port			UEPSP	UEPXN	1.79	9.93	9.19	3.66	2.92			20.35	10.54	13.32	1.40
	B.1.7	2-Wire Voice Unbundled 1-Way Outgoing PBX Hotel/Hospital Discount Room Calling Port			UEPSP	UEPXO	1.79	9.93	9.19	3.66	2.92			20.35	10.54	13.32	1.40
	B.1.7	2-Wire Voice Unbundled 1-Way Outgoing PBX Measured Port			UEPSP	UEPXS	1.79	9.93	9.19	3.66	2.92			20.35	10.54	13.32	1.40
	B.1.7	2-Wire Voice Unbundled PBX Collierville and Memphis Calling Port			UEPSP	UEPXU	1.79	9.93	9.19	3.66	2.92			20.35	10.54	13.32	1.40
	B.1.7	2-Wire Voice Unbundled 2-Way PBX Tennessee RegionServ Calling Port			UEPSP	UEPXV	1.79	9.93	9.19	3.66	2.92			20.35	10.54	13.32	1.40
		Subsequent Activity			UEPSP	USASC	0.00	0.00	0.00								
	FEATURES				_EPSP												
		All Available Vertical Features			UEPSE	UEPVF	0.00	0.00	0.00					20.35	10.54	13.32	1.40
	EXCHANGE PORT RATES (COIN)																
		Exchange Ports - Coin Port					2.11	9.93	9.19	3.66	2.92			20.35	10.54	13.32	1.40
UNBUNDLED LOCAL SWITCHING, PORT USAGE																	
	End Office Switching (Port Usage)																
		End Office Switching Function, Per MOU					0.0008041										
	Tandem Switching (Port Usage) (Local or Access Tandem)																
		Tandem Switching Function Per MOU					0.0009778										
	Common Transport																
		Common Transport - Per Mile, Per MOU					0.0000064										
		Common Transport - Facilities Termination Per MOU					0.0003871										
UNBUNDLED PORT/LOOP COMBINATIONS - COST BASED RATES																	
	For Georgia, Kentucky, Louisiana and Tennessee, the recurring UNE Port and Loop charges listed apply to Currently Combined and Not Currently Combined Combos and the first and additional Port nonrecurring charges apply to Not Currently Combined Combos. For Currently Combined Combos in GA, KY, LA, TN and all other states, the nonrecurring charges shall be those identified in the Nonrecurring - Currently Combined sections.																
	2-WIRE VOICE GRADE LOOP WITH 2-WIRE LINE PORT (RES)																
	UNE Port/Loop Combination Rates																
		2-Wire VG Loop/Port Combo - Zone 1		1			14.18										
		2-Wire VG Loop/Port Combo - Zone 2		2			18.01										
		2-Wire VG Loop/Port Combo - Zone 3		3			23.02										
	UNE Loop Rates																
		2-Wire Voice Grade Loop (SL1) - Zone 1	I	1	UEPRX	UEPLX	12.48										
		2-Wire Voice Grade Loop (SL1) - Zone 2	I	2	UEPRX	UEPLX	16.31										
		2-Wire Voice Grade Loop (SL1) - Zone 3	I	3	UEPRX	UEPLX	21.32										
	2-Wire Voice Grade Line Port Rates (Res)																
		2-Wire voice unbundled port - residence	I		UEPRX	UEPRL	1.70	22.14	15.25	8.45	3.91			30.89	7.03		
		2-Wire voice unbundled port with Caller ID - res	I		UEPRX	UEPRC	1.70	22.14	15.25	8.45	3.91			30.89	7.03		
		2-Wire voice unbundled port outgoing only - res	I		UEPRX	UEPRO	1.70	22.14	15.25	8.45	3.91			30.89	7.03		
		2-Wire voice Grade unbundled Tennessee extended local dialing parity port with Caller ID - res	I		UEPRX	UEPAQ	1.70	22.14	15.25	8.45	3.91			30.89	7.03		
		2-Wire voice unbundled Tennessee Area Plus with Caller ID - res (AC7)	I		UEPRX	UEPAH	1.70	22.14	15.25	8.45	3.91			30.89	7.03		
		2-Wire voice unbundled Tennessee Area Calling port with Caller ID - res (F2R)	I		UEPRX	UEPAK	1.70	22.14	15.25	8.45	3.91			30.89	7.03		

BellSouth/MCIm
TENNESSEE
Rates
For
Network Elements

CATEGORY	UNBUNDLED NETWORK ELEMENT	Interim	Zone	BCS	USOC	RATES ($)					OSS RATES ($)					
							Nonrecurring		Nonrecurring Disconnect							
						Rec	First	Add'l	First	Add'l	Svc Order Submitted Elec per LSR	Svc Order Submitted Manually per LSR	Incremental Charge - Manual Svc Order vs. Electronic-1st	Incremental Charge - Manual Svc Order vs. Electronic-Add'l	Incremental Charge - Manual Svc Order vs. Electronic-Disc 1st	Incremental Charge - Manual Svc Order vs. Electronic-Disc Add'l
											SOMEC	SOMAN	SOMAN	SOMAN	SOMAN	SOMAN
	2-Wire voice unbundled Tennessee Area Calling port with Caller ID - res (TACER)	I		UEPRX	UEPAL	1.70	22.14	15.25	8.45	3.91			30.89	7.03		
	2-Wire voice unbundled Tennessee Area Calling port with Caller ID - res (TACSR)	I		UEPRX	UEPAM	1.70	22.14	15.25	8.45	3.91			30.89	7.03		
	2-Wire voice unbundled Tennessee Area Calling port with Caller ID - res (1MF2X)	I		UEPRX	UEPAN	1.70	22.14	15.25	8.45	3.91			30.89	7.03		
	2-Wire voice unbundled Tennessee Area Calling port with Caller ID - res (2MR)	I		UEPRX	UEPAO	1.70	22.14	15.25	8.45	3.91			30.89	7.03		
	2-Wire voice unbundles res, low usage line port with Caller ID (LUM)	I		UEPRX	UEPAP	1.70	22.14	15.25	8.45	3.91			30.89	7.03		
FEATURES																
	All Features Offered	I		UEPRX	UEPVF	0.00	0.00	0.00					30.89	7.03		
LOCAL NUMBER PORTABILITY																
	Local Number Portability (1 per port)	I		UEPRX	LNPCX	0.35										
NONRECURRING CHARGES (NRCs) - CURRENTLY COMBINED																
	2-Wire Voice Grade Loop / Line Port Combination - Conversion - Switch-as-is	I		UEPRX	USAC2		1.03	0.29					30.89	7.03		
	2-Wire Voice Grade Loop / Line Port Combination - Conversion - Switch with change	I		UEPRX	USACC		1.03	0.29					30.89	7.03		
	2-Wire Voice Grade Loop / Line Port Combination - Conversion - Subsequent Database Update	I					0.76						7.97			
ADDITIONAL NRCs																
	2-Wire Voice Grade Loop/Line Port Combination - Subsequent Activity	I		UEPRX	USAS2	0.00	0.00	0.00					30.89	7.03		
2-WIRE VOICE GRADE LOOP WITH 2-WIRE LINE PORT (BUS)																
UNE Port/Loop Combination Rates																
	2-Wire VG Loop/Port Combo - Zone 1		1			14.18										
	2-Wire VG Loop/Port Combo - Zone 2		2			18.01										
	2-Wire VG Loop/Port Combo - Zone 3		3			23.02										
UNE Loop Rates																
	2-Wire Voice Grade Loop (SL1) - Zone 1	I	1	UEPBX	UEPLX	12.48										
	2-Wire Voice Grade Loop (SL1) - Zone 2	I	2	UEPBX	UEPLX	16.31										
	2-Wire Voice Grade Loop (SL1) - Zone 3	I	3	UEPBX	UEPLX	21.32										
2-Wire Voice Grade Line Port (Bus)																
	2-Wire voice unbundled port without Caller ID - bus	I		UEPBX	UEPBL	1.70	22.14	15.25	8.45	3.91			30.89	7.03		
	2-Wire voice unbundled port with Caller + E484 ID - bus	I		UEPBX	UEPBC	1.70	22.14	15.25	8.45	3.91			30.89	7.03		
	2-Wire voice unbundled port outgoing only - bus	I		UEPBX	UEPBO	1.70	22.14	15.25	8.45	3.91			30.89	7.03		
	2-Wire voice Grade unbundled Tennessee extended local dialing parity port with Caller ID - bus	I		UEPBX	UEPAV	1.70	22.14	15.25	8.45	3.91			30.89	7.03		
	2-Wire voice unbundled incoming only port with Caller ID - Bus	I		UEPBX	UPEB1	1.70	22.14	15.25	8.45	3.91			30.89	7.03		
	2-Wire voice unbundled Tennessee Bus 2-Way Area Calling Port Economy Option (TACC1)	I		UEPBX	UEPAC	1.70	22.14	15.25	8.45	3.91			30.89	7.03		
	2-Wire voice unbundled Tennessee Bus 2-Way Area Calling Port Standard Option (TACC2)	I		UEPBX	UEPAD	1.70	22.14	15.25	8.45	3.91			30.89	7.03		
	2-Wire voice unbundled Tennessee Bus 2-Way Collierville and Memphis Local Calling Port (B2F)	I		UEPBX	UEPAE	1.70	22.14	15.25	8.45	3.91			30.89	7.03		
LOCAL NUMBER PORTABILITY																
	Local Number Portability (1 per port)	I		UEPBX	LNPCX	0.35										
FEATURES																
	All Features Offered	I		UEPBX	UEPVF	0.00	0.00	0.00					30.89	7.03		
NONRECURRING CHARGES (NRCs) - CURRENTLY COMBINED																
	2-Wire Voice Grade Loop / Line Port Combination - Conversion - Switch-as-is	I		UEPBX	USAC2		1.03	0.29					30.89	7.03		
	2-Wire Voice Grade Loop / Line Port Combination - Conversion - Switch with change	I		UEPBX	USACC		1.03	0.29								
	2-Wire Voice Grade Loop / Line Port Combination - Conversion - Subsequent Database Update	I					0.76						7.97			

BellSouth/MCIm
TENNESSEE
Rates
For
Network Elements

CATEGORY	UNBUNDLED NETWORK ELEMENT	Interim	Zone	BCS	USOC	RATES ($)					OSS RATES ($)					
							Nonrecurring		Nonrecurring Disconnect		Svc Order Submitted Elec per LSR	Svc Order Submitted Manually per LSR	Incremental Charge - Manual Svc Order vs. Electronic-1st	Incremental Charge - Manual Svc Order vs. Electronic-Add'l	Incremental Charge - Manual Svc Order vs. Electronic-Disc 1st	Incremental Charge - Manual Svc Order vs. Electronic-Disc Add'l
						Rec	First	Add'l	First	Add'l	SOMEC	SOMAN	SOMAN	SOMAN	SOMAN	SOMAN
ADDITIONAL NRCs																
	2-Wire Voice Grade Loop/Line Port Combination - Subsequent Activity	I		UEPBX	USAS2								30.89	7.03		
2-WIRE VOICE GRADE LOOP WITH 2-WIRE LINE PORT (RES - PBX)																
UNE Port/Loop Combination Rates																
	2-Wire VG Loop/Port Combo - Zone 1		1			14.18										
	2-Wire VG Loop/Port Combo - Zone 2		2			18.01										
	2-Wire VG Loop/Port Combo - Zone 3		3			23.02										
	2-Wire Voice Grade Loop (SL 1) - Zone 1	I	1	UEPRG	UEPLX	12.48										
	2-Wire Voice Grade Loop (SL 1) - Zone 2	I	2	UEPRG	UEPLX	16.31										
	2-Wire Voice Grade Loop (SL 1) - Zone 3	I	3	UEPRG	UEPLX	21.32										
2-Wire Voice Grade Line Port Rates (RES - PBX)																
	2-Wire VG Unbundled Combination 2-Way PBX Trunk Port - Res	I		UEPRG	UEPRD	1.70	22.14	15.25	8.45	3.91			30.89	7.03		
LOCAL NUMBER PORTABILITY																
	Local Number Portability (1 per port)	I		UEPRG	LNPCP	3.50										
FEATURES																
	All Features Offered	I		UEPRG	UEPVF	0.00	0.00	0.00					30.89	7.03		
NONRECURRING CHARGES (NRCs) - CURRENTLY COMBINED																
	2-Wire Voice Grade Loop/ Line Port Combination (PBX) - Conversion - Switch-As-Is	I		UEPRG	USAC2		1.03	0.29					30.89	7.03		
	2-Wire Voice Grade Loop/ Line Port Combination (PBX) - Conversion - Switch with Change	I		UEPRG	USACC		1.03	0.29					30.89	7.03		
	2-Wire Voice Grade Loop / Line Port Combination - Conversion - Subsequent Database Update	I					0.76						7.97			
ADDITIONAL NRCs																
	2-Wire Voice Grade Loop/ Line Port Combination (PBX) - Subsequent Activity	I		UEPRG	USAS2	0.00	0.00	0.00					30.89	7.03		
	PBX Subsequent Activity - Change/Rearrange Multiline Hunt Group	I					14.64	14.64					19.99	19.99	19.99	19.99
2-WIRE VOICE GRADE LOOP WITH 2-WIRE LINE PORT (BUS - PBX)																
UNE Port/Loop Combination Rates																
	2-Wire VG Loop/Port Combo - Zone 1		1			14.18										
	2-Wire VG Loop/Port Combo - Zone 2		2			18.01										
	2-Wire VG Loop/Port Combo - Zone 3		3			23.02										
UNE Loop Rates																
	2-Wire Voice Grade Loop (SL 1) - Zone 1	I	1	UEPPX	UEPLX	12.48										
	2-Wire Voice Grade Loop (SL 1) - Zone 2	I	2	UEPPX	UEPLX	16.31										
	2-Wire Voice Grade Loop (SL 1) - Zone 3	I	3	UEPPX	UEPLX	21.32										
2-Wire Voice Grade Line Port Rates (BUS - PBX)																
	Line Side Unbundled Combination 2-Way PBX Trunk Port - Bus	I		UEPPX	UEPPC	1.70	22.14	15.25	8.45	3.91			30.89	7.03		
	Line Side Unbundled Outward PBX Trunk Port - Bus	I		UEPPX	UEPPO	1.70	22.14	15.25	8.45	3.91			30.89	7.03		
	Line Side Unbundled Incoming PBX Trunk Port - Bus	I		UEPPX	UEPP1	1.70	22.14	15.25	8.45	3.91			30.89	7.03		
	2-Wire Voice Unbundled PBX LD Terminal Ports	I		UEPPX	UEPLD	1.70	22.14	15.25	8.45	3.91			30.89	7.03		
	2-Wire Voice Unbundled 2-Way Combination PBX Tennessee Calling Port	I		UEPPX	UEPT2	1.70	22.14	15.25	8.45	3.91			30.89	7.03		
	2-Wire Voice Unbundled 1-Way Outgoing PBX Tennessee Calling Port	I		UEPPX	UEPTO	1.70	22.14	15.25	8.45	3.91			30.89	7.03		
	2-Wire Voice Unbundled 2-Way Combination PBX Usage Port	I		UEPPX	UEPXA	1.70	22.14	15.25	8.45	3.91			30.89	7.03		
	2-Wire Voice Unbundled PBX Toll Terminal Hotel Ports	I		UEPPX	UEPXB	1.70	22.14	15.25	8.45	3.91			30.89	7.03		
	2-Wire Voice Unbundled PBX LD DDD Terminals Port	I		UEPPX	UEPXC	1.70	22.14	15.25	8.45	3.91			30.89	7.03		
	2-Wire Voice Unbundled PBX LD Terminal Switchboard Port	I		UEPPX	UEPXD	1.70	22.14	15.25	8.45	3.91			30.89	7.03		
	2-Wire Voice Unbundled PBX LD Terminal Switchboard IDD Capable Port	I		UEPPX	UEPXE	1.70	22.14	15.25	8.45	3.91			30.89	7.03		
	2-Wire Voice Unbundled 2-Way PBX Hotel/Hospital Economy Administrative Calling Port	I		UEPPX	UEPXL	1.70	22.14	15.25	8.45	3.91			30.89	7.03		

BellSouth/MCIm
TENNESSEE
Rates
For
Network Elements

CATEGORY	UNBUNDLED NETWORK ELEMENT	Interim	Zone	BCS	USOC	RATES ($)					OSS RATES ($)					
							Nonrecurring		Nonrecurring Disconnect							
						Rec	First	Add'l	First	Add'l	Svc Order Submitted Elec per LSR	Svc Order Submitted Manually per LSR	Incremental Charge - Manual Svc Order vs. Electronic-1st	Incremental Charge - Manual Svc Order vs. Electronic-Add'l	Incremental Charge - Manual Svc Order vs. Electronic-Disc 1st	Incremental Charge - Manual Svc Order vs. Electronic-Disc Add'l
											SOMEC	SOMAN	SOMAN	SOMAN	SOMAN	SOMAN
	2-Wire Voice Unbundled 2-Way PBX Hotel/Hospital Economy Room Calling Port	I		UEPPX	UEPXM	1.70	22.14	15.25	8.45	3.91			30.89	7.03		
	2-Wire Voice Unbundled 1W Out PBX Hotel/Hospital Economy Administrative Calling Port TN Calling Port	I		UEPPX	UEPXN	1.70	22.14	15.25	8.45	3.91			30.89	7.03		
	2-Wire Voice Unbundled 1-Way Outgoing PBX Hotel/Hospital Discount Room Calling Port	I		UEPPX	UEPXO	1.70	22.14	15.25	8.45				30.89	7.03		
	2-Wire Voice Unbundled 1-Way Outgoing PBX Measured Port	I		UEPPX	UEPXS	1.70	22.14	15.25	8.45	3.91			30.89	7.03		
	2-Wire Voice Unbundled PBX Collierville and Memphis Calling Port	I		UEPPX	UEPXU	1.70	22.14	15.25	8.45	3.91			30.89	7.03		
	2-Wire Voice Unbundled 2-Way PBX Tennessee RegionServ Callling Port	I		UEPPX	UEPXV	1.70	22.14	15.25	8.45	3.91			30.89	7.03		
LOCAL NUMBER PORTABILITY																
	Local Number Portability (1 per port)	I		UEPPX	LNPCP	3.15										
FEATURES																
	All Features Offered	I		UEPPX	UEPVF	0.00	0.00	0.00					30.89	7.03		
NONRECURRING CHARGES (NRCs) - CURRENTLY COMBINED																
	2-Wire Voice Grade Loop/ Line Port Combination (PBX) - Conversion - Switch-As-Is	I		UEPPX	USAC2		1.03	0.29					30.89	7.03		
	2-Wire Voice Grade Loop/ Line Port Combination (PBX) - Conversion - Switch with Change	I		UEPPX	USACC		1.03	0.29					30.89	7.03		
	2-Wire Voice Grade Loop / Line Port Combination - Conversion - Subsequent Database Update	I					0.76						7.97			
ADDITIONAL NRCs																
	2-Wire Voice Grade Loop/ Line Port Combination (PBX) - Subsequent Activity	I		UEPPX	USAS2	0.00	0.00	0.00					30.89	7.03		
	PBX Subsequent Activity - Change/Rearrange Multiline Hunt Group	I					14.64	14.64					19.99	19.99	19.99	19.99
UNE Port/Loop Combination Rates																
	2-Wire VG Coin Port/Loop Combo – Zone 1					14.18										
	2-Wire VG Coin Port/Loop Combo – Zone 2					18.01										
	2-Wire VG Coin Port/Loop Combo – Zone 3					23.02										
UNE Loop Rates																
	2-Wire Voice Grade Loop (SL1) - Zone 1	I		UEPCO	UEPLX	12.48										
	2-Wire Voice Grade Loop (SL1) - Zone 2	I		UEPCO	UEPLX	16.31										
	2-Wire Voice Grade Loop (SL1) - Zone 3	I		UEPCO	UEPLX	21.32										
2-Wire Voice Grade Line Ports (COIN)																
	2-Wire Coin 2-Way without Operator Screening and without Blocking (TN)	I		UEPCO	UEPTB	1.70	22.14	15.25	8.45	3.91			30.89	7.03		
	2-Wire Coin 2-Way with Operator Screening and Blocking: 011, 900/976, 1+DDD (NC, TN)	I		UEPCO	UEPRP	1.70	22.14	15.25	8.45	3.91			30.89	7.03		
	2-Wire Coin 2-Way with Operator Screening and 011 Blocking (TN)	I		UEPCO	UEPTA	1.70	22.14	15.25	8.45	3.91			30.89	7.03		
	2-Wire Coin 2-Way with Operator Screening: 900 Blocking: 900/976, 1+DDD, 011+, and Local (NC, TN)	I		UEPCO	UEPCA	1.70	22.14	15.25	8.45	3.91			30.89	7.03		
	2-Wire Coin Outward with Operator Screening and 011 Blocking (TN)	I		UEPCO	UEPTC	1.70	22.14	15.25	8.45	3.91			30.89	7.03		
	2-Wire Coin Outward with Operator Screening and Blocking: 900/976, 1+DDD, 011+, and Local (TN)	I		UEPCO	UEPOT	1.70	22.14	15.25	8.45	3.91			30.89	7.03		
	2-Wire 2-Way Smartline with 900/976 (all states except LA)	I		UEPCO	UEPCK	1.88							30.89	7.03		
	2-Wire Coin Outward Smartline with 900/976 (all states except LA)	I		UEPCO	UEPCR	1.88							30.89	7.03		
ADDITIONAL UNE COIN PORT/LOOP (RC)																
	UNE Coin Port/Loop Combo Usage (Flat Rate)	I		UEPCO	URECU	3.45	0.00	0.00								
	Local Number Portability (1 per port)	I		UEPCO	LNPCX	0.35										
FEATURES																
	2-Wire Voice Grade Loop / Line Port Combination - Conversion - Switch-as-is	I		UEPCO	USAC2		1.03	0.29					30.89	7.03		

BellSouth/MCIm
TENNESSEE
Rates
For
Network Elements

CATEGORY	UNBUNDLED NETWORK ELEMENT	Interim	Zone	BCS	USOC	RATES ($)					OSS RATES ($)					
							Nonrecurring		Nonrecurring Disconnect							
						Rec	First	Add'l	First	Add'l	Svc Order Submitted Elec per LSR	Svc Order Submitted Manually per LSR	Incremental Charge - Manual Svc Order vs. Electronic-1st	Incremental Charge - Manual Svc Order vs. Electronic-Add'l	Incremental Charge - Manual Svc Order vs. Electronic-Disc 1st	Incremental Charge - Manual Svc Order vs. Electronic-Disc Add'l
											SOMEC	SOMAN	SOMAN	SOMAN	SOMAN	SOMAN
	2-Wire Voice Grade Loop / Line Port Combination - Conversion - Switch with change	I		UEPCO	USACC		1.03	0.29					30.89	7.03		
	2-Wire Voice Grade Loop/Line Port Combination - Subsequent Activity	I		UEPCO	USAS2		0.00	0.00					30.89	7.03		
2-WIRE VOICE GRADE LOOP- BUS ONLY - WITH 2-WIRE DID TRUNK PORT																
UNE Port/Loop Combination Rates																
	2-Wire VG Loop/2-Wire DID Trunk Port Combo - UNE Zone 1		1			18.38										
	2-Wire VG Loop/2-Wire DID Trunk Port Combo - UNE Zone 2		2			19.87										
	2-Wire VG Loop/2-Wire DID Trunk Port Combo - UNE Zone 3		3			24.78										
	2-Wire Analog Voice Grade Loop - (SL2) - UNE Zone 1	I	1	UEPPX	UECD1	9.60										
	2-Wire Analog Voice Grade Loop - (SL2) - UNE Zone 2	I	2	UEPPX	UECD1	11.09										
	2-Wire Analog Voice Grade Loop - (SL2) - UNE Zone 3	I	3	UEPPX	UECD1	16.00										
	Exchange Ports - 2-Wire DID Port	I		UEPPX	UEPD1	8.78	45.44	29.94	8.45	3.91			30.89	7.03		
NONRECURRING CHARGES - CURRENTLY COMBINED																
	2-Wire Voice Grade Loop / 2-Wire DID Trunk Port Combination - Switch-as-is	I		UEPPX	USAC1		8.76	5.75					30.89	7.03		
	2-Wire Voice Grade Loop / 2-Wire DID Trunk Port Conversion with BellSouth Allowable Changes	I		UEPPX	USA1C		8.76	5.75					30.89	7.03		
Telephone Number/Trunk Group Establisment Charges																
	DID Trunk Termination (One Per Port)			UEPPX	NDT	0.00	0.00	0.00					19.99	19.99		
	Additional DID Numbers for each Group of 20 DID Numbers			UEPPX	ND4	0.00	0.00	0.00								
	DID Numbers, Non- consecutive DID Numbers , Per Number			UEPPX	ND5	0.00	0.00	0.00					19.99			
	Reserve Non-Consecutive DID numbers			UEPPX	ND6	0.00	0.00	0.00					19.99	19.99		
	Reserve DID Numbers			UEPPX	NDV	0.00	0.00	0.00								
LOCAL NUMBER PORTABILITY																
	Local Number Portability (1 per port)	I		UEPPX	LNPCP	3.15										
2-WIRE ISDN DIGITAL GRADE LOOP WITH 2-WIRE ISDN DIGITAL LINE SIDE PORT																
UNE Port/Loop Combination Rates																
	2W ISDN Digital Grade Loop/2W ISDN Digital Line Side Port - UNE Zone 1		1	UEPPB UEPPR		32.27										
	2W ISDN Digital Grade Loop/2W ISDN Digital Line Side Port - UNE Zone 2		2	UEPPB UEPPR		34.78										
	2W ISDN Digital Grade Loop/2W ISDN Digital Line Side Port - UNE Zone 3		3	UEPPB UEPPR		44.32										
	2-Wire ISDN Digital Grade Loop - UNE Zone 1	I	1	UEPPB UEPPR	USL2X	16.20										
	2-Wire ISDN Digital Grade Loop - UNE Zone 2	I	2	UEPPB UEPPR	USL2X	18.71										
	2-Wire ISDN Digital Grade Loop - UNE Zone 3	I	3	UEPPB UEPPR	USL2X	28.25										
	Exchange Port - 2-Wire ISDN Line Side Port	I		UEPPB UEPPR	UEPPB	16.07	141.75	118.37	49.20	43.26			19.99	19.99	19.99	19.99
NONRECURRING CHARGES - CURRENTLY COMBINED																
	2-Wire ISDN Digital Grade Loop / 2-Wire ISDN Line Side Port Combination - Conversion	I		UEPPB UEPPR	USACB	0.00	117.23	117.23					19.99	19.99	19.99	19.99
ADDITIONAL NRCs																
	2-Wire ISDN Loop / 2-Wire ISDN Port Combination - Sub Actvy - Non Feature/Add Trunk	I		UEPPB UEPPR	USASB		212.88						19.99	19.99	19.99	19.99
LOCAL NUMBER PORTABILITY																
	Local Number Portability (1 per port)	I		UEPPB UEPPR	LNPCX	0.35	0.00	0.00								
B-CHANNEL USER PROFILE ACCESS:																
	CVS/CSD (DMS/5ESS)			UEPPB UEPPR	U1UCA	0.00	0.00	0.00								

BellSouth/MCIm
TENNESSEE
Rates
For
Network Elements

CATEGORY	UNBUNDLED NETWORK ELEMENT	Interim	Zone	BCS	USOC	RATES ($) Rec	Nonrecurring First	Nonrecurring Add'l	Nonrecurring Disconnect First	Nonrecurring Disconnect Add'l	OSS RATES ($) Svc Order Submitted Elec per LSR SOMEC	Svc Order Submitted Manually per LSR SOMAN	Incremental Charge - Manual Svc Order vs. Electronic-1st SOMAN	Incremental Charge - Manual Svc Order vs. Electronic-Add'l SOMAN	Incremental Charge - Manual Svc Order vs. Electronic-Disc 1st SOMAN	Incremental Charge - Manual Svc Order vs. Electronic-Disc Add'l SOMAN
	CVS (EWSD)			UEPPB UEPPR	U1UCB	0.00	0.00	0.00								
	CSD			UEPPB UEPPR	U1UCC	0.00	0.00	0.00								
B-CHANNEL AREA PLUS USER PROFILE ACCESS: (AL,KY,LA,MS SC,MS, & TN)																
	CVS/CSD (DMS/5ESS)			UEPPB UEPPR	U1UCD	0.00	0.00	0.00								
	CVS (EWSD)			UEPPB UEPPR	U1UCE	0.00	0.00	0.00								
	CSD			UEPPB UEPPR	U1UCF	0.00	0.00	0.00								
USER TERMINAL PROFILE																
	User Terminal Profile (EWSD only)			UEPPR	U1UMA	0.00	0.00	0.00								
VERTICAL FEATURES																
	All Vertical Features - One per Channel B User Profile			UEPPB UEPPR	UEPVF	0.00	0.00	0.00								
	Interoffice Channel mileage each, including first mile and facilities termination	I		UEPPB UEPPR	M1GNC	17.91	53.99	17.37					19.99	19.99	19.99	19.99
	Interoffice Channel mileage each, additional mile	I		UEPPB UEPPR	M1GNM	0.173	0.00	0.00				0.00				
4-WIRE DS1 DIGITAL LOOP WITH 4-WIRE ISDN DS1 DIGITAL TRUNK PORT																
UNE Port/Loop Combination Rates																
	4W DS1 Digital Loop/4W ISDN DS1 Digital Trunk Port - UNE Zone 1		1	UEPPP		132.58										
	4W DS1 Digital Loop/4W ISDN DS1 Digital Trunk Port - UNE Zone 2		2	UEPPP		150.25										
	4W DS1 Digital Loop/4W ISDN DS1 Digital Trunk Port - UNE Zone 3		3	UEPPP		173.44										
	4-Wire DS1 Digital Loop - UNE Zone 1	I	1	UEPPP	USL4P	57.73										
	4-Wire DS1 Digital Loop - UNE Zone 2	I	2	UEPPP	USL4P	75.40										
	4-Wire DS1 Digital Loop - UNE Zone 3	I	3	UEPPP	USL4P	98.59										
	Exchange Ports - 4-Wire ISDN DS1 Port	I		UEPPP	UEPPP	74.85	415.53	366.90	89.28	77.43			19.99	19.99	19.99	19.99
NONRECURRING CHARGES - CURRENTLY COMBINED																
	4-Wire DS1 Digital Loop / 4-Wire ISDN DS1 Digital Trunk Port Combination - Conversion -Switch-as-is	I		UEPPP	USACP	0.00	328.53	328.53					19.99	19.99	19.99	19.99
ADDITIONAL NRCs																
	4-Wire DS1 Loop/4-W ISDN Digtl Trk Port - Subsqt Actvy- Inward/two way tel nos within Std Allowance	I		UEPPP	PR7TF		0.94						19.99	19.99	19.99	19.99
	4-Wire DS1 Loop / 4-Wire ISDN DS1 Digital Trunk Port - Outward Tel Numbers (All States except NC)	I		UEPPP	PR7TO		22.36	22.36					19.99	19.99	19.99	19.99
	4-Wire DS1 Loop / 4-Wire ISDN DS1 Digital Trk Port - Subsequent Inward Tel Nos Above Std Allowance	I		UEPPP	PR7ZT		44.71	44.70					19.99	19.99	19.99	19.99
LOCAL NUMBER PORTABILITY																
	Local Number Portability (1 per port)	I		UEPPP	LNPCN	1.75										
INTERFACE (Provsioning Only)																
	Voice/Data			UEPPP	PR71V	0.00	0.00	0.00								
	Digital Data			UEPPP	PR71D	0.00	0.00	0.00								
	Inward Data			UEPPP	PR71E	0.00	0.00	0.00								
New or Additional "B" Channel																
	New or Additional - Voice/Data B Channel	I		UEPPP	PR7BV	0.00	28.39						19.99	19.99	19.99	19.99
	New or Additional - Digital Data B Channel	I		UEPPP	PR7BF	0.00	29.11						19.99	19.99	19.99	19.99
	New or Additional Inward Data B Channel	I		UEPPP	PR7BD	0.00	29.39						19.99	19.99	19.99	19.99
	New or Additional Useage Sensitive Voice Data B Channel	I		UEPPP	PR7BS	0.00	28.39						19.99	19.99	19.99	19.99
	New or Additional Useage Sensitive Digital Data B Channel	I		UEPPP	PR7BU	0.00	28.39						19.99	19.99	19.99	19.99

BellSouth/MCIm
TENNESSEE
Rates
For
Network Elements

CATEGORY	UNBUNDLED NETWORK ELEMENT	Interim	Zone	BCS	USOC	RATES ($)					OSS RATES ($)					
							Nonrecurring		Nonrecurring Disconnect		Svc Order Submitted Elec per LSR	Svc Order Submitted Manually per LSR	Incremental Charge - Manual Svc Order vs. Electronic-1st	Incremental Charge - Manual Svc Order vs. Electronic-Add'l	Incremental Charge - Manual Svc Order vs. Electronic-Disc 1st	Incremental Charge - Manual Svc Order vs. Electronic-Disc Add'l
						Rec	First	Add'l	First	Add'l	SOMEC	SOMAN	SOMAN	SOMAN	SOMAN	SOMAN
CALL TYPES																
	Inward			UEPPP	PR7C1	0.00	0.00	0.00								
	Outward			UEPPP	PR7C0	0.00	0.00	0.00								
	Two-way			UEPPP	PR7CC	0.00	0.00	0.00								
Interoffice Channel Mileage																
	Fixed Each Including First Mile			UEPPP	1LN1A	76.1825	145.98	109.85	19.55				19.99	19.99	19.99	19.99
	Each Airline-Fractional Additional Mile	1		UEPPP	1LN1B	0.3525										
4-WIRE DS1 DIGITAL LOOP WITH 4-WIRE DDITS TRUNK PORT																
UNE Port/Loop Combination Rates																
	4W DS1 Digital Loop/4W DDITS Trunk Port - UNE Zone 1	I	1	UEPDC		93.28							19.99	19.99	19.99	19.99
	4W DS1 Digital Loop/4W DDITS Trunk Port - UNE Zone 2	I	2	UEPDC		110.95							19.99	19.99	19.99	19.99
	4W DS1 Digital Loop/4W DDITS Trunk Port - UNE Zone 3	I	3	UEPDC		134.14							19.99	19.99	19.99	19.99
	4-Wire DS1 Digital Loop - UNE Zone 1	I	1	UEPDC	USLDC	57.53										
	4-Wire DS1 Digital Loop - UNE Zone 2	I	2	UEPDC	USLDC	75.40										
	4-Wire DS1 Digital Loop - UNE Zone 3	I	3	UEPDC	USLDC	98.59										
	4-Wire DDITS Digital Trunk Port	I		UEPDC	UDD1T	35.55	342.80	257.87	61.41	48.49			19.99	19.99	19.99	19.99
NONRECURRING CHARGES - CURRENTLY COMBINED																
	4-Wire DS1 Digital Loop / 4-Wire DDITS Trunk Port Combination - Switch-as-is	I		UEPDC	USAC4		312.91	312.91					19.99	19.99	19.99	19.99
	4-Wire DS1 Digital Loop / 4-Wire DDITS Trunk Port Combination - Conversion with DS1 Changes	I		UEPDC	USAWA		312.91	312.91					19.99	19.99	19.99	19.99
	4-Wire DS1 Digital Loop / 4-Wire DDITS Trunk Port Combination - Conversion with Change - Trunk	I		UEPDC	USAWB		312.91	312.91					19.99	19.99	19.99	19.99
ADDITIONAL NRCs																
	4-Wire DS1 Loop / 4-Wire DDITS Trunk Port - Subsequent Service Activity Per Service Order	I		UEPDC	USAS4		94.88	94.88								
	4-Wire DS1 Loop / 4-Wire DDITS Trunk Port - NRC - Subsequent Channel Activation/Chan - 2-Way Trunk	I		UEPDC	UDTTA		108.67	108.67					19.99	19.99	19.99	19.99
	4-Wire DS1 Loop / 4-Wire DDITS Trunk Port - Subsequent Channel Activation/Chan - 1-Way Outward Trunk	I		UEPDC	UDTTB		108.67	108.67					19.99	19.99	19.99	19.99
	4-Wire DS1 Loop / 4-Wire DDITS Trunk Port - Subsqnt Channel Activation/Chan Inward Trunk w/out DID	I		UEPDC	UDTTC		108.67	108.67					19.99	19.99	19.99	19.99
	4-Wire DS1 Loop / 4-Wire DDITS Trunk Port - Subsqnt Chan Activation Per Chan - Inward Trunk with DID	I		UEPDC	UDTTD		108.67	108.67					19.99	19.99	19.99	19.99
	4-Wire DS1 Loop / 4-Wire DDITS Trunk Port - Subsqnt Chan Activation / Chan - 2-Way DID w User Trans	I		UEPDC	UDTTE		108.67	108.67					19.99	19.99	19.99	19.99
BIPOLAR 8 ZERO SUBSTITUTION																
	B8ZS -Superframe Format	I		UEPDC	CCOSF		0.00	590.00					19.99	19.99	19.99	19.99
	B8ZS - Extended Superframe Format	I		UEPDC	CCOEF		0.00	590.00					19.99	19.99	19.99	19.99
Alternate Mark Inversion																
	AMI -Superframe Format			UEPDC	MCOSF		0.00	0.00								
	AMI - Extended SuperFrame Format			UEPDC	MCOPO		0.00	0.00								
Telephone Number/Trunk Group Establisment Charges																
	Telephone Number for 2-Way Trunk Group	I		UEPDC	UDTGX	0.00							19.99	19.99		

BellSouth/MCIm
TENNESSEE
Rates
For
Network Elements

CATEGORY	UNBUNDLED NETWORK ELEMENT	Interim	Zone	BCS	USOC	RATES ($)					OSS RATES ($)					
							Nonrecurring		Nonrecurring Disconnect							
						Rec	First	Add'l	First	Add'l	Svc Order Submitted Elec per LSR	Svc Order Submitted Manually per LSR	Incremental Charge - Manual Svc Order vs. Electronic-1st	Incremental Charge - Manual Svc Order vs. Electronic-Add'l	Incremental Charge - Manual Svc Order vs. Electronic-Disc 1st	Incremental Charge - Manual Svc Order vs. Electronic-Disc Add'l
											SOMEC	SOMAN	SOMAN	SOMAN	SOMAN	SOMAN
	Telephone Number for 1-Way Outward Trunk Group	I		UEPDC	UDTGY	0.00							19.99	19.99		
	Telephone Number for 1-Way Inward Trunk Group Without DID	I		UEPDC	UDTGZ	0.00							19.99	19.99		
	DID Numbers for each Group of 20 DID Numbers	I		UEPDC	ND4	0.00							19.99	19.99		
	DID Numbers, Non- consecutive DID Numbers , Per Number	I		UEPDC	ND5	0.00							19.99	19.99		
	Reserve Non-Consecutive DID Nos.			UEPDC	ND6	0.00	0.00	0.00								
	Reserve DID Numbers			UEPDC	NDV	0.00	0.00	0.00								
Dedicated DS1 (Interoffice Channel Mileage) - FX/FCO for 4-Wire DS1 Digital Loop with 4-Wire DDITS Trunk Port																
	Interoffice Channel Mileage - Fixed rate 0-8 miles (Facilities Termination)	I		UEPDC	1LNO1	75.83	145.98	109.85	19.66	14.99						
	Interoffice Channel Mileage - Additional rate per mile - 0-8 miles	I		UEPDC	1LNOA	0.3525	0.00	0.00								
	Interoffice Channel Mileage - Fixed rate 9-25 miles (Facilities Termination)			UEPDC	1LNO2	0.00	0.00	0.00								
	Interoffice Channel Mileage - Additional rate per mile - 9-25 miles	I		UEPDC	1LNOB	0.3525	0.00	0.00								
	Interoffice Channel Mileage - Fixed rate 25+ miles (Facilities Termination)			UEPDC	1LNO3	0.00	0.00	0.00	0.00							
	Interoffice Channel Mileage - Additional rate per mile - 25+ miles	I		UEPDC	1LNOC	0.3525	0.00	0.00								
	Local Number Portability, per DS0 Activated	I		UEPDC	LNPCP	3.15	0.00	0.00	0.00							
	Central Office Termininating Point			UEPDC	CTG	0.00										
4-WIRE DS1 LOOP WITH CHANNELIZATION WITH PORT																
System is 1 DS1 Loop, 1 D4 Channel Bank, and up to 24 Feature Activations																
Each System can have up to 24 combinations of rates depending on type and number of ports used																
UNE DS1 Loop																
	4-Wire DS1 Loop - UNE Zone 1	I	1	UEPMG	USLDC	57.73	0.00	0.00								
	4-Wire DS1 Loop - UNE Zone 2	I	2	UEPMG	USLDC	75.40	0.00	0.00								
	4-Wire DS1 Loop - UNE Zone 3	I	3	UEPMG	USLDC	98.59	0.00	0.00								
UNE DSO Channelization Capacities (D4 Channel Bank Configurations)																
	24 DSO Channel Capacity - 1 per DS1	I		UEPMG	VUM24	131.87	0.00	0.00					19.99	19.99		
	48 DSO Channel Capacity - 1 per 2 DS1s	I		UEPMG	VUM48	263.74	0.00	0.00					19.99	19.99		
	96 DSO Channel Capacity -1per 4 DS1s	I		UEPMG	VUM96	527.48	0.00	0.00					19.99	19.99		
	144 DS0 Channel Capacity - 1 per 6 DS1s	I		UEPMG	VUM14	791.42	0.00	0.00					19.99	19.99		
	192 DS0 Channel Capacity -1 per 8 DS1s	I		UEPMG	VUM19	827.76	0.00	0.00					19.99	19.99		
	240 DS0 Channel Capacity - 1 per 10 DS1s	I		UEPMG	VUM20	1,318.70	0.00	0.00					19.99	19.99		
	288 DS0 Channel Capacity - 1 per 12 DS1s	I		UEPMG	VUM28	1,582.44	0.00	0.00					19.99	19.99		
	384 DS0 Channel Capacity - 1 per 16 DS1s	I		UEPMG	VUM38	2,109.92	0.00	0.00					19.99	19.99		
	480 DS0 Channel Capacity - 1 per 20 DS1s	I		UEPMG	VUM40	2,637.40	0.00	0.00					19.99	19.99		
	576 DS0 Channel Capacity -1 per 24 DS1s	I		UEPMG	VUM57	3,164.88	0.00	0.00					19.99	19.99		
	672 DS0 Channel Capacity - 1 per 28 DS1s	I		UEPMG	VUM67	3,692.36	0.00	0.00					19.99	19.99		
Non-Recurring Charges (NRC) Associated with 4-Wire DS1 Loop with Channeliztion with Port - Conversion Charge Based on a System																

BellSouth/MCIm
TENNESSEE
Rates
For
Network Elements

CATEGORY	UNBUNDLED NETWORK ELEMENT	Interim	Zone	BCS	USOC	RATES ($) Rec	Nonrecurring First	Nonrecurring Add'l	Nonrecurring Disconnect First	Nonrecurring Disconnect Add'l	OSS RATES ($) Svc Order Submitted Elec per LSR SOMEC	Svc Order Submitted Manually per LSR SOMAN	Incremental Charge - Manual Svc Order vs. Electronic-1st SOMAN	Incremental Charge - Manual Svc Order vs. Electronic-Add'l SOMAN	Incremental Charge - Manual Svc Order vs. Electronic-Disc 1st SOMAN	Incremental Charge - Manual Svc Order vs. Electronic-Disc Add'l SOMAN
	NRC - Conversion (Currently Combined) with or without BellSouth Allowed Changes	I		UEPMG	USAC4	0.00	303.61	15.74					19.99	19.99		
System Additions at End User Locations Where 4-Wire DS1 Loop with Channelization with Port Combination Currently Exists and																
New (Not Currently Combined) In Georgia & Tennessee Only																
	1 DS1/D4 Channel Bank - Add NRC for each Port and Assoc Fea Activation - New GA, LA, KY &TN Only	I		UEPMG	VUMD4	0.00	704.68	441.48	138.36	16.41			19.99			
Bipolar 8 Zero Substitution																
	Clear Channel Capability Format, superframe - Subsequent Activity Only	I		UEPMG	CCOSF	0.00	0.00	590.00								
	Clear Channel Capability Format - Extended Superframe - Subsequent Activity Only	I		UEPMG	CCOEF	0.00	0.00	590.00								
Alternate Mark Inversion (AMI)																
	Superframe Format			UEPMG	MCOSF	0.00	0.00	0.00								
	Extended Superframe Format			UEPMG	MCOPO	0.00	0.00	0.00								
Exchange Ports Associated with 4-Wire DS1 Loop with Channelization with Port																
Exchange Ports																
	Line Side Combination Channelized PBX Trunk Port - Business			UEPPX	UEPCX	1.79	0.00	0.00	0.00	0.00			30.89	7.03		
	Line Side Outward Channelized PBX Trunk Port - Business			UEPPX	UEPOX	1.79	0.00	0.00	0.00	0.00			30.89	7.03		
	Line Side Inward Only Channelized PBX Trunk Port without DID			UEPPX	UEP1X	1.79	0.00	0.00	0.00	0.00			30.89	7.03		
	2-Wire Trunk Side Unbundled Channelized DID Trunk Port			UEPPX	UEPDM	8.97	0.00	0.00	0.00	0.00			30.89	7.03		
Feature Activations - Unbundled Loop Concentration																
	Feature (Service) Activation for each Line Side Port Terminated in D4 Bank	I		UEPPX	1PQWM	0.66	23.94	12.64	3.82	3.80			30.89	7.03		
	Feature (Service) Activation for each Trunk Side Port Terminated in D4 Bank	I		UEPPX	1PQWU	0.66	73.67	17.37	54.09	10.57			30.89	7.03		
Telephone Number/ Group Establishment Charges for DID Service																
	DID Trunk Termination (1 per Port)			UEPPX	NDT	0.00										
	DID Numbers - groups of 20 - Valid all States			UEPPX	ND4	0.00	0.00	0.00								
	Non-Consecutive DID Numbers - per number			UEPPX	ND5	0.00	0.00	0.00								
	Reserve Non-Consecutive DID Numbers			UEPPX	ND6	0.00	0.00	0.00								
	Reserve DID Numbers			UEPPX	NDV	0.00	0.00	0.00								
Local Number Portability																
	Local Number Portability - 1 per port	I		UEPPX	LNPCP	3.15	0.00	0.00								
FEATURES - Vertical and Optional																
Local Switching Features Offered with Line Side Ports Only																
	All Features Available			UEPPX	UEPVF	0.00	0.00	0.00								
UNBUNDLED PORT LOOP COMBINATIONS - MARKET RATES																
	Market Rates shall apply where BellSouth is not required to provide unbundled local switching or switch ports per FCC and/or State Commission rules.															
	These scenarios include:															
	1. Unbundled port/loop combinations that are Not Currently Combined in all of the BellSouth states except as noted for Georgia, Kentucky, Louisiana and Tennessee.															
	2. Unbundled port/loop combinations that are Currently Combined or Not Currently Combined in Zone 1 of the Top 8 MSAS in BellSouth's region for end users with 4 or more DS0 equivalent lines.															
	The Top 8 MSAs in BellSouth's region are: FL (Orlando, Ft. Lauderdale, Miami); GA (Atlanta); LA (New Orleans); NC (Greensboro-Winston Salem-Highpoint/Charlotte-Gastonia-Rock Hill); TN (Nashville).															

BellSouth/MCIm
TENNESSEE
Rates
For
Network Elements

CATEGORY	UNBUNDLED NETWORK ELEMENT	Interim	Zone	BCS	USOC	RATES ($)					OSS RATES ($)					
							Nonrecurring		Nonrecurring Disconnect							
						Rec	First	Add'l	First	Add'l	Svc Order Submitted Elec per LSR	Svc Order Submitted Manually per LSR	Incremental Charge - Manual Svc Order vs. Electronic-1st	Incremental Charge - Manual Svc Order vs. Electronic-Add'l	Incremental Charge - Manual Svc Order vs. Electronic-Disc 1st	Incremental Charge - Manual Svc Order vs. Electronic-Disc Add'l
											SOMEC	SOMAN	SOMAN	SOMAN	SOMAN	SOMAN
	The Market Rate for unbundled ports includes all available features in all states.															
	End Office and Tandem Switching Usage and Common Transport Usage rates in the Port section of this rate exhibit shall apply to all combinations of loop/port network elements except for UNE Coin Port/Loop Combinations which have a flat rate usage charge (USOC: URECU).															
	For Not Currently Combined scenarios where Market Rates apply, the Nonrecurring charges are listed in the First and Additional NRC columns for each Port USOC. For Currently Combined scenarios, the Nonrecurring charges are listed in the NRC - Currently Combined section. Additional NRCs may apply also and are categorized accordingly.															
	2-WIRE VOICE GRADE LOOP WITH 2-WIRE LINE PORT (RES)															
	UNE Port/Loop Combination Rates															
	2-Wire VG Loop/Port Combo - Zone 1	I	1			26.48										
	2-Wire VG Loop/Port Combo - Zone 2	I	2			30.31										
	2-Wire VG Loop/Port Combo - Zone 3	I	3			35.32										
	UNE Loop Rates															
	2-Wire Voice Grade Loop (SL1) - Zone 1		1	UEPRX	UEPLX	12.48										
	2-Wire Voice Grade Loop (SL1) - Zone 2		2	UEPRX	UEPLX	16.31										
	2-Wire Voice Grade Loop (SL1) - Zone 3		3	UEPRX	UEPLX	21.32										
	2-Wire Voice Grade Line Port (Res)															
	2-Wire voice unbundled port - residence	I		UEPRX	UEPRL	14.00	90.00	90.00					30.89	7.03		
	2-Wire voice unbundled port with Caller ID - res	I		UEPRX	UEPRC	14.00	90.00	90.00					30.89	7.03		
	2-Wire voice unbundled port outgoing only - res	I		UEPRX	UEPRO	14.00	90.00	90.00					30.89	7.03		
	2-Wire voice Grade unbundled Tennessee extended local dialing parity port with Caller ID - res	I		UEPRX	UEPAQ	14.00	90.00	90.00					30.89	7.03		
	2-Wire voice unbundled Tennessee Area Calling port with Caller ID - res (F2R)	I		UEPRX	UEPAK	14.00	90.00	90.00					30.89	7.03		
	2-Wire voice unbundled Tennessee Area Calling port with Caller ID - res (TACER)	I		UEPRX	UEPAL	14.00	90.00	90.00					30.89	7.03		
	2-Wire voice unbundled Tennessee Area Calling port with Caller ID - res (TACSR)	I		UEPRX	UEPAM	14.00	90.00	90.00					30.89	7.03		
	2-Wire voice unbundled Tennessee Area Calling port with Caller ID - res (1MF2X)	I		UEPRX	UEPAN	14.00	90.00	90.00					30.89	7.03		
	2-Wire voice unbundled Tennessee Area Calling port with Caller ID - res (2MR)	I		UEPRX	UEPAO	14.00	90.00	90.00					30.89	7.03		
	2-Wire voice unbundles res, low usage line port with Caller ID (LUM)	I		UEPRX	UEPAP	14.00	90.00	90.00					30.89	7.03		
	LOCAL NUMBER PORTABILITY															
	Local Number Portability (1 per port)	I		UEPRX	LNPCX	0.35										
	FEATURES															
	All Features Offered	I		UEPRX	UEPVF	0.00	0.00	0.00								
	2-Wire Voice Grade Loop / Line Port Combination - Switch-as-is	I		UEPRX	USAC2		41.50	41.50					30.89	7.03		
	2-Wire Voice Grade Loop / Line Port Combination - Switch with change	I		UEPRX	USACC		41.50	41.50								
	ADDITIONAL NRCs	I														
	NRC - 2-Wire Voice Grade Loop/Line Port Combination - Subsequent			UEPRX	USAS2		0.00	0.00					30.89	7.03		
	2-WIRE VOICE GRADE LOOP WITH 2-WIRE LINE PORT (BUS)															
	UNE Port/Loop Combination Rates															
	2-Wire VG Loop/Port Combo - Zone 1	I	1			26.48										
	2-Wire VG Loop/Port Combo - Zone 2	I	2			30.31										
	2-Wire VG Loop/Port Combo - Zone 3	I	3			35.32										
	UNE Loop Rates															
	2-Wire Voice Grade Loop (SL1) - Zone 1		1	UEPBX	UEPLX	12.48										
	2-Wire Voice Grade Loop (SL1) - Zone 2		2	UEPBX	UEPLX	16.31										
	2-Wire Voice Grade Loop (SL1) - Zone 3		3	UEPBX	UEPLX	21.32										
	2-Wire Voice Grade Line Port (Bus)															
	2-Wire voice unbundled port without Caller ID - bus	I		UEPBX	UEPBL	14.00	90.00	90.00					30.89	7.03		
	2-Wire voice unbundled port with Caller + E484 ID - bus	I		UEPBX	UEPBC	14.00	90.00	90.00					30.89	7.03		
	2-Wire voice unbundled port outgoing only - bus	I		UEPBX	UEPBO	14.00	90.00	90.00					30.89	7.03		
	2-Wire voice Grade unbundled Tennessee extended local dialing parity port with Caller ID - bus	I		UEPBX	UEPAV	14.00	90.00	90.00					30.89	7.03		
	2-Wire voice unbundled Tennessee Bus 2-Way Area Calling Port Economy Option (TACC1)	I		UEPBX	UEPAC	14.00							30.89	7.03		
	2-Wire voice unbundled Tennessee Bus 2-Way Area Calling Port Standard Option (TACC2)	I		UEPBX	UEPAD	14.00	90.00	90.00					30.89	7.03		
	2-Wire voice unbundled Tennessee Bus 2-Way Collierville and Memphis Local Calling Port (B2F)	I		UEPBX	UEPAE	14.00							30.89	7.03		

BellSouth/MCIm
TENNESSEE
Rates
For
Network Elements

CATEGORY	UNBUNDLED NETWORK ELEMENT	Interim	Zone	BCS	USOC	RATES ($)					OSS RATES ($)					
							Nonrecurring		Nonrecurring Disconnect		Svc Order Submitted Elec per LSR	Svc Order Submitted Manually per LSR	Incremental Charge - Manual Svc Order vs. Electronic-1st	Incremental Charge - Manual Svc Order vs. Electronic-Add'l	Incremental Charge - Manual Svc Order vs. Electronic-Disc 1st	Incremental Charge - Manual Svc Order vs. Electronic-Disc Add'l
						Rec	First	Add'l	First	Add'l	SOMEC	SOMAN	SOMAN	SOMAN	SOMAN	SOMAN
LOCAL NUMBER PORTABILITY																
	Local Number Portability (1 per port)	I		UEPBX	LNPCX	0.35										
FEATURES																
NONRECURRING CHARGES - CURRENTLY COMBINED																
	2-Wire Voice Grade Loop / Line Port Combination - Switch-as-is	I		UEPBX	USAC2		41.50	41.50					30.89	7.03		
	2-Wire Voice Grade Loop / Line Port Combination - Switch with change	I		UEPBX	USACC		41.50	41.50								
ADDITIONAL NRCs																
	NRC - 2-Wire Voice Grade Loop/Line Port Combination - Subsequent	I		UEPBX	USAS2		0.00	0.00					30.89	7.03		
2-WIRE VOICE GRADE LOOP WITH 2-WIRE LINE PORT (RES - PBX)																
UNE Port/Loop Combination Rates																
	2-Wire VG Loop/Port Combo - Zone 1	I	1			26.48										
	2-Wire VG Loop/Port Combo - Zone 2	I	2			30.31										
	2-Wire VG Loop/Port Combo - Zone 3	I	3			35.32										
UNE Loop Rates																
	2-Wire Voice Grade Loop (SL1) - Zone 1		1	UEPRG	UEPLX	12.48										
	2-Wire Voice Grade Loop (SL1) - Zone 2		2	UEPRG	UEPLX	16.31										
	2-Wire Voice Grade Loop (SL1) - Zone 3		3	UEPRG	UEPLX	21.32										
2-Wire Voice Grade Line Port Rates (RES - PBX)																
	2-Wire VG Unbundled Combination 2-Way PBX Trunk Port - Res	I		UEPRG	UEPRD	14.00	90.00	90.00					30.89	7.03		
LOCAL NUMBER PORTABILITY																
	Local Number Portability (1 per port)	I		UEPRG	LNPCP	3.15										
FEATURES																
NONRECURRING CHARGES - CURRENTLY COMBINED																
	2-Wire Voice Grade Loop/ Line Port Combination - Switch-As-Is	I		UEPRG	USAC2		41.50	41.50					30.89	7.03		
	2-Wire Voice Grade Loop/ Line Port Combination - Switch with Change	I		UEPRG	USACC		41.50	41.50								
ADDITIONAL NRCs																
	2 Wire Loop/Line Side Port Combination - Non feature - Subsequent Activity-Nonrecurring						0.00	0.00								
	PBX Subsequent Activity - Change/Rearrange Multiline Hunt Group	I					14.64	14.64					19.99	19.99	19.99	19.99
2-WIRE VOICE GRADE LOOP WITH 2-WIRE LINE PORT (BUS - PBX)																
UNE Port/Loop Combination Rates																
	2-Wire VG Loop/Port Combo - Zone 1	I	1			26.48										
	2-Wire VG Loop/Port Combo - Zone 2	I	2			30.31										
	2-Wire VG Loop/Port Combo - Zone 3	I	3			35.32										
UNE Loop Rates																
	2-Wire Voice Grade Loop (SL1) - Zone 1		1	UEPPX	UEPLX	12.48										
	2-Wire Voice Grade Loop (SL1) - Zone 2		2	UEPPX	UEPLX	16.31										
	2-Wire Voice Grade Loop (SL1) - Zone 3		3	UEPPX	UEPLX	21.32										
2-Wire Voice Grade Line Port Rates (BUS - PBX)																
	Line Side Unbundled Combination 2-Way PBX Trunk Port - Bus	I		UEPPX	UEPPC	14.00	90.00	90.00					30.89	7.03		
	Line Side Unbundled Outward PBX Trunk Port - Bus	I		UEPPX	UEPPO	14.00	90.00	90.00					30.89	7.03		
	Line Side Unbundled Incoming PBX Trunk Port - Bus	I		UEPPX	UEPP1	14.00	90.00	90.00					30.89	7.03		
	2-Wire Voice Unbundled PBX LD Terminal Ports	I		UEPPX	UEPLD	14.00	90.00	90.00					30.89	7.03		
	2-Wire Voice Unbundled 2-Way Combination PBX Tennessee Calling Port	I		UEPPX	UEPT2	14.00							30.89	7.03		
	2-Wire Voice Unbundled 1-Way Outgoing PBX Tennessee Calling Port	I		UEPPX	UEPTO	14.00							30.89	7.03		
	2-Wire Voice Unbundled 2-Way Combination PBX Usage Port	I		UEPPX	UEPXA	14.00	90.00	90.00					30.89	7.03		
	2-Wire Voice Unbundled PBX Toll Terminal Hotel Ports	I		UEPPX	UEPXB	14.00	90.00	90.00					30.89	7.03		
	2-Wire Voice Unbundled PBX LD DDD Terminals Port	I		UEPPX	UEPXC	14.00	90.00	90.00					30.89	7.03		
	2-Wire Voice Unbundled PBX LD Terminal Switchboard Port	I		UEPPX	UEPXD	14.00	90.00	90.00					30.89	7.03		
	2-Wire Voice Unbundled PBX LD Terminal Switchboard IDD Capable Port	I		UEPPX	UEPXE	14.00	90.00	90.00					30.89	7.03		
	2-Wire Voice Unbundled 2-Way PBX Hotel/Hospital Economy Administrative Calling Port	I		UEPPX	UEPXL	14.00	90.00	90.00					30.89	7.03		
	2-Wire Voice Unbundled 2-Way PBX Hotel/Hospital Economy Room Calling Port	I		UEPPX	UEPXM	14.00	90.00	90.00					30.89	7.03		
	2-Wire Voice Unbundled 1-W Out PBX Hotel/Hospital Economy Administrative Calling Port TN	I		UEPPX	UEPXN	14.00	90.00	90.00					30.89	7.03		
	2-Wire Voice Unbundled 1-Way Outgoing PBX Hotel/Hospital Discount Room Calling Port	I		UEPPX	UEPXO	14.00	90.00	90.00					30.89	7.03		
	2-Wire Voice Unbundled 1-Way Outgoing PBX Measured Port	I		UEPPX	UEPXS	14.00	90.00	90.00					30.89	7.03		

BellSouth/MCIm
TENNESSEE
Rates
For
Network Elements

CATEGORY	UNBUNDLED NETWORK ELEMENT	Interim	Zone	BCS	USOC	RATES ($)					OSS RATES ($)					
							Nonrecurring		Nonrecurring Disconnect		Svc Order Submitted Elec per LSR	Svc Order Submitted Manually per LSR	Incremental Charge - Manual Svc Order vs. Electronic-1st	Incremental Charge - Manual Svc Order vs. Electronic-Add'l	Incremental Charge - Manual Svc Order vs. Electronic-Disc 1st	Incremental Charge - Manual Svc Order vs. Electronic-Disc Add'l
						Rec	First	Add'l	First	Add'l	SOMEC	SOMAN	SOMAN	SOMAN	SOMAN	SOMAN
	2-Wire Voice Unbundled PBX Collierville and Memphis Calling Port	I		UEPPX	UEPXU	14.00	90.00	90.00					30.89	7.03		
	2-Wire Voice Unbundled 2-Way PBX Tennessee RegionServ Callling Port	I		UEPPX	UEPXV	14.00	90.00	90.00					30.89	7.03		
LOCAL NUMBER PORTABILITY																
	Local Number Portability (1 per port)	I		UEPPX	LNPCP	3.15										
FEATURES																
NONRECURRING CHARGES - CURRENTLY COMBINED																
	2-Wire Voice Grade Loop/ Line Port Combination - Switch-As-Is	I		UEPPX	USAC2		41.50	41.50					30.89	7.03		
	2-Wire Voice Grade Loop/ Line Port Combination - Switch with Change	I		UEPPX	USACC		41.50	41.50								
ADDITIONAL NRCs		I													20.00	20.00
	2-Wire Voice Grade Loop/ Line Port Combination - Subsequent	I		UEPPX	USAS2		0.00	0.00					30.89	7.03		
	2 Wire Loop/Line Side Port Combination - Non feature - Subsequent Activity-Nonrecurring						0.00	0.00								
	PBX Subsequent Activity - Change/Rearrange Multiline Hunt Group	I					14.64	14.64					19.99	19.99	19.99	19.99
2-WIRE VOICE GRADE LOOP WITH 2-WIRE ANALOG LINE COIN PORT																
UNE Port/Loop Combination Rates																
	2-Wire VG Coin Port/Loop Combo – Zone 1	I				26.48										
	2-Wire VG Coin Port/Loop Combo – Zone 2	I				30.31										
	2-Wire VG Coin Port/Loop Combo – Zone 3	I				35.32										
UNE Loop Rates																
	2-Wire Voice Grade Loop (SL1) - Zone 1			UEPCO	UEPLX	12.48										
	2-Wire Voice Grade Loop (SL1) - Zone 2			UEPCO	UEPLX	16.31										
	2-Wire Voice Grade Loop (SL1) - Zone 3			UEPCO	UEPLX	21.32										
2-Wire Voice Grade Line Port Rates (Coin)																
	2-Wire Coin 2-Way without Operator Screening and without Blocking (TN)	I		UEPCO	UEPTB	14.00	90.00	90.00					30.89	7.03		
	2-Wire Coin 2-Way with Operator Screening and Blocking: 011, 900/976, 1+DDD (NC, TN)	I		UEPCO	UEPRP	14.00							30.89	7.03		
	2-Wire Coin 2-Way with Operator Screening and 011 Blocking (TN)	I		UEPCO	UEPTA	14.00	90.00	90.00					30.89	7.03		
	2-Wire Coin 2-Way with Operator Screening and Blocking: 900/976, 1+DDD, 011+, and Local (NC, TN)	I		UEPCO	UEPCA	14.00	90.00	90.00					30.89	7.03		
	2-Wire Coin Outward with Operator Screening and 011 Blocking (TN)	I		UEPCO	UEPTC	14.00	90.00	90.00					30.89	7.03		
	2-Wire Coin Outward with Operator Screening and Blocking: 900/976, 1+DDD, 011+, and Local (TN)	I		UEPCO	UEPOT	14.00	90.00	90.00					30.89	7.03		
LOCAL NUMBER PORTABILITY																
	Local Number Portability (1 per port)	I		UEPCO	LNPCX	0.35										
NONRECURRING CHARGES - CURRENTLY COMBINED																
	2-Wire Voice Grade Loop/ Line Port Combination - Switch-As-Is	I		UEPCO	USAC2		41.50	41.50					30.89	7.03		
	2-Wire Voice Grade Loop/ Line Port Combination - Switch with Change	I		UEPCO	USACC		41.50	41.50								
ADDITIONAL NRCs																
	2-Wire Voice Grade Loop/ Line Port Combination - Subsequent	I		UEPCO	USAS2		0.00	0.00					30.89	7.03		

NOTE: All elements marked with an "I" in column D and shaded are interim subject to retroactive true-up.

BellSouth/MCIm
Tennessee
Rates
for
Local Interconnection

CATEGORY	NOTES	LOCAL INTERCONNECTION	Interim	Zone	BCS	USOC	RATES ($) Rec	Nonrecurring First	Nonrecurring Add'l	Nonrecurring Disconnect First	Nonrecurring Disconnect Add'l	OSS RATES ($) Svc Order Submitted Elec per LSR SOMEC	Svc Order Submitted Manually per LSR SOMAN	Incremental Charge - Manual Svc Order vs. Electronic-1st SOMAN	Incremental Charge - Manual Svc Order vs. Electronic-Add'l SOMAN	Incremental Charge - Manual Svc Order vs. Electronic-Disc 1st SOMAN	Incremental Charge - Manual Svc Order vs. Electronic-Disc Add'l SOMAN
	NOTE: All elements marked with an "I" in column D and shaded are interim subject to retroactive true-up.																
LOCAL INTERCONNECTION (CALL TRANSPORT AND TERMINATION)																	
	ISP-bound Traffic																
		ISP-bound Traffic, per MOU (June 14, 2001 through December 13, 2001)					$0.0015000										
		ISP-bound Traffic, per MOU (December 14, 2001 through June 13, 2003)					$0.0010000										
		ISP-bound Traffic, per MOU (June 14, 2003 forward)					$0.0007000										
	END OFFICE SWITCHING																
		End Office Switching Function, Per MOU			OHD		$0.0008041										
	TANDEM SWITCHING																
		Tandem Switching Function Per MOU			OHD		$0.0009778										
		Multiple Tandem Switching, per MOU (applies to intial tandem only)			OHD		$0.0009778										
	TRUNK CHARGE																
		Installation Trunk Side Service - per DS0			OHD	TPP++		334.29	57.01								
		Dedicated End Office Trunk Port Service-per DS0**			OHD	TDE0P	0.00										
		Dedicated End Office Trunk Port Service-per DS1**			0H1 OH1MS	TDE1P	0.00										
		Dedicated Tandem Trunk Port Service-per DS0**			OHD	TDW0P	0.00										
		Dedicated Tandem Trunk Port Service-per DS1**			OH1 OH1MS	TDW1P	0.00										
	** This rate element is recovered on a per MOU basis and is included in the End Office Switching and Tandem Switching, per MOU rate elements																
LOCAL INTERCONNECTION (TRANSPORT)																	
	COMMON TRANSPORT (Shared)																
		Common Transport - Per Mile, Per MOU			OHD		$0.0000064										
		Common Transport - Facilities Termination Per MOU			OHD		$0.0003871										
	INTEROFFICE CHANNEL - DEDICATED TRANSPORT - VOICE GRADE																
		Interoffice Channel - Dedicated Transport - 2-Wire Voice Grade - Per Mile per month			OHL, OHM	1L5NF	0.0174										
		Interoffice Channel - Dedicated Transport- 2- Wire Voice Grade - Facility Termination per month			OHL, OHM	1L5NF	18.58	55.39	17.37	27.96	3.51						
	INTEROFFICE CHANNEL - DEDICATED TRANSPORT - 56/64 KBPS																
		Interoffice Channel - Dedicated Transport - 56 kbps - per mile per month			OHL, OHM	1L5NK	0.0174										
		Interoffice Channel - Dedicated Transport - 56 kbps - Facility Termination per month			OHL, OHM	1L5NK	17.98	55.39	17.37	27.96	3.51						
		Interoffice Channel - Dedicated Transport - 64 kbps - per mile per month			OHL, OHM	1L5NK	0.0174										
		Interoffice Channel - Dedicated Transport - 64 kbps - Facility Termination per month			OHL, OHM	1L5NK	17.98	55.39	17.37	27.96	3.51						
	INTEROFFICE CHANNEL - DEDICATED TRANSPORT - DS1																
		Interoffice Channel - Dedicated Channel - DS1 - Per Mile per month			OH1 OH1M	1L5NL	0.3562										
		Interoffice Channel - Dedicated Tranport - DS1 - Facility Termination per month			OH1 OH1M	1L5NL	77.86	112.40	76.27	19.55	14.99						
	INTEROFFICE CHANNEL - DEDICATED TRANSPORT- DS3																
		Interoffice Channel - Dedicated Transport - DS3 - Per Mile per month			OH3 OH3M	1L5NM	2.34										
		Interoffice Channel - Dedicated Transport - DS3 - Facility Termination per month			OH3 OH3M	1L5NM	848.99	395.29	176.56	109.04	105.91						
	LOCAL CHANNEL - DEDICATED TRANSPORT																
		Local Channel - Dedicated - 2-Wire Voice Grade per month			OHL OHM	TEFV2	19.02	199.33	24.16	54.81	4.80						
		Local Channel - Dedicated - 4-Wire Voice Grade per month			OHL OHM	TEFV4	20.56	201.53	24.83	55.52	5.51						
		Local Channel - Dedicated - DS1 per month			OH1	TEFHG	40.99	277.35	233.26	33.18	22.30						
		Local Channel - Dedicated - DS3 Facility Termination per month			OH3	TEFHJ	611.30	595.37	304.50	215.82	151.15						
	LOCAL INTERCONNECTION MID-SPAN MEET																

BellSouth/MCIm
Tennessee
Rates
for
Local Interconnection

CATEGORY	NOTES	LOCAL INTERCONNECTION	Interim	Zone	BCS	USOC	RATES ($)					OSS RATES ($)					
								Nonrecurring		Nonrecurring Disconnect							
							Rec	First	Add'l	First	Add'l	Svc Order Submitted Elec per LSR SOMEC	Svc Order Submitted Manually per LSR SOMAN	Incremental Charge - Manual Svc Order vs. Electronic-1st SOMAN	Incremental Charge - Manual Svc Order vs. Electronic-Add'l SOMAN	Incremental Charge - Manual Svc Order vs. Electronic-Disc 1st SOMAN	Incremental Charge - Manual Svc Order vs. Electronic-Disc Add'l SOMAN
	NOTE: If Access service ride Mid-Span Meet, one-half the tariffed service Local Channel rate is applicable.																
	MULTIPLEXERS																
		Channelization - DS1 to DS0 Channel System			OH1 OH1M	SATN1	80.77	141.87	77.11	14.51	13.86						
		DS3 to DS1 Channel System per month			OH3 OH3MS	SATNS	222.98	308.03	108.47	44.47	42.62						
		DS3 Interface Unit (DS1 COCI) per month			OH1 OH1MS	SATCO	17.58	6.07	4.66								
		Interface Unite - Interface DS1 to DS0 - OCU - DP Card					1.82	6.07	4.66								
		Interface Unite - Interface DS1 to DS0 - Brite Card					3.10	6.07	4.66								
		Interface Unit - Interface DS1 to DS0 - Voice Grade Card					0.91	6.07	4.66								

CATEGORY	NOTE	UNBUNDLED NETWORK ELEMENT	Interim Indicator	Zone	BCS	USOC	RATES ($) Rec	Nonrecurring First	Nonrecurring Add'l	Nonrecurring Disconnect First	Nonrecurring Disconnect Add'l	OSS RATES ($) Svc Order Submitted Elec per LSR SOMEC	Svc Order Submitted Manually per LSR SOMAN	Incremental Charge - Manual Svc Order vs. Electronic-1st SOMAN	Incremental Charge - Manual Svc Order vs. Electronic-Add'l SOMAN	Incremental Charge - Manual Svc Order vs. Electronic-Disc 1st SOMAN	Incremental Charge - Manual Svc Order vs. Electronic-Disc Add'l SOMAN
	NOTE: All elements marked with an "I" in column D and shaded are interim subject to retroactive true-up.																
PHYSICAL COLLOCATION																	
		Physical Collocation - Application Fee - Initial	I		CLO	PE1BA		3,767.00	3,767.00								
		Physical Collocation - Application Fee - Subsequent	I		CLO	PE1CA		3,140.00	3,140.00								
		Physical Collocation - Space Preparation - Firm Order Processing	I		CLO	PE1SJ		1,204.00	1,204.00								
		Physical Collocation - Space Preparation - C.O. Modification per square ft.	I		CLO	PE1SK	2.74										
		Physical Collocation - Space Preparation - Common Systems Modification per square ft. - Cageless	I		CLO	PE1SL	2.95										
		Physical Collocation - Space Preparation - Common Systems Modification per Cage	I		CLO	PE1SM	100.14										
		Physical Collocation - Cable Installation	I		CLO	PE1BD		1,757.00	1,757.00								
		Physical Collocation - Floor Space per Sq. Ft.	I		CLO	PE1PJ	6.75										
							19.80										
		Physical Collocation - Power per Fused Amp	I		CLO	PE1PL	8.87										
		Physical Collocation - 120V, Single Phase Standby Power Rate	I		CLO	PE1FB	5.60										
		Physical Collocation - 240V, Single Phase Standby Power Rate	I		CLO	PE1FD	11.22										
		Physical Collocation - 120V, Three Phase Standby Power Rate	I		CLO	PE1FE	16.82										
		Physical Collocation - 277V, Three Phase Standby Power Rate	I		CLO	PE1FG	38.84										
		Physical Collocation - 2-Wire Cross-Connects	I		UEANL, UEA,UDN,UDC,UAL,UHL, UCL,UEQ	PE1P2	0.033	33.82	31.92								
		Physical Collocation-2 Wire Cross Connects (Loop) for Line Splitting	I		UEPSR, UEPSB	PE1LS	0.033	33.82	31.92								
		Physical Collocation 2-Wire Cross Connect, Exchange Port 2-Wire Analog - Res	I		UEPSR	PE1R2	0.30	19.20	19.20								
		Physical Collocation 2-Wire Cross Connect, Exchange Port 2-Wire Voice Grade - Res	I		UEPRX	PE1R2	0.30	19.20	19.20								
		Physical Collocation 2-Wire Cross Connect, Exchange Port 2-Wire Line Side PBX Trunk - Bus	I		UEPSP	PE1R2	0.30	19.20	19.20								
		Physical Collocation 2-Wire Cross Connect, Exchange Port 2-Wire Voice Grade PBX Trunk - Res	I		UEPSE	PE1R2	0.30	19.20	19.20								
		Physical Collocation 2-Wire Cross Connect, Exchange Port 2-Wire Analog - Bus	I		UEPSB	PE1R2	0.30	19.20	19.20								
		Physical Collocation 2-Wire Cross Connect, Exchange Port 2-Wire ISDN	I		UEPSX	PE1R2	0.30	19.20	19.20								
		Physical Collocation 2-Wire Cross Connect, Exchange Port 2-Wire ISDN	I		UEPTX	PE1R2	0.30	19.20	19.20								
		Physical Collocation 4-Wire Cross Connect, Exchange Port DDITS 4-Wire	I		UEPDD	PE1R4	0.50	19.20	19.20								
		Physical Collocation 4-Wire Cross Connect, Exchange Port 4-Wire ISDN DS1	I		UEPEX	PE1R4	0.50	19.20	19.20								
		Physical Collocation - 4-Wire Cross-Connects	I		CLO	PE1P4	0.066	33.94	31.95								
		Physical Collocation - DS1 Cross-Connects	I		CLO	PE1P1	1.51	53.27	40.16								
		Physical Collocation - DS3 Cross-Connects	I		CLO	PE1P3	19.26	52.37	38.89								
		Physical Collocation - 2-Fiber Cross-Connect	I		CLO	PE1F2	3.82	52.37	38.89								
		Physical Collocation - 4-Fiber Cross-Connect	I		CLO	PE1F4	6.79	65.03	51.55								
		Physical Collocation - Welded Wire Cage - First 100 Sq. Ft.	I		CLO	PE1BW	218.53										
		Physical Collocation - Welded Wire Cage - Add'l 50 Sq. Ft.	I		CLO	PE1CW	21.44										
		Physical Collocation - Security Access System - Security System per Central Office	I		CLO	PE1AX	55.99										
		Physical Collocation - Security Access System - New Access Card Activation, per Card	I		CLO	PE1A1	0.059	55.67	55.67								
		Physical Collocation-Security Access System-Administrative Change, existing Access Card, per Card	I		CLO	PE1AA		15.61	15.61								
		Physical Collocation - Security Access System - Replace Lost or Stolen Card, per Card	I		CLO	PE1AR		45.64	45.64								
		Physical Collocation - Security Access - Initial Key, per Key	I		CLO	PE1AK		26.24	26.24								
		Physical Collocation - Security Access - Key, Replace Lost or Stolen Key, per Key	I		CLO	PE1AL		26.24	26.24								
		Physical Collocation - Space Availability Report per premises	I		CLO	PE1SR		2,154.00	2,154.00								
		POT Bay Arrangements prior to 6/1/99 - 2-Wire Cross-Connect, per cross-connect	I		UEANL, CLO	PE1PE	0.40										
		POT Bay Arrangements prior to 6/1/99 - 4-Wire Cross-Connect, per cross-connect	I		CLO	PE1PF	1.20										
		POT Bay Arrangements prior to 6/1/99 - DS1 Cross-Connect, per cross-connect	I		CLO	PE1PG	1.20										
		POT Bay Arrangements prior to 6/1/99 - DS3 Cross-Connect, per cross-connect	I		CLO	PE1PH	8.00										

**BellSouth/MCIm
Tennesse
Rates
for
Collocation**

CATEGORY	NOTE	UNBUNDLED NETWORK ELEMENT	Interim Indicator	Zone	BCS	USOC	RATES ($) Rec	Nonrecurring First	Nonrecurring Add'l	Nonrecurring Disconnect First	Nonrecurring Disconnect Add'l	OSS RATES ($) Svc Order Submitted Elec per LSR SOMEC	Svc Order Submitted Manually per LSR SOMAN	Incremental Charge - Manual Svc Order vs. Electronic-1st SOMAN	Incremental Charge - Manual Svc Order vs. Electronic-Add'l SOMAN	Incremental Charge - Manual Svc Order vs. Electronic-Disc 1st SOMAN	Incremental Charge - Manual Svc Order vs. Electronic-Disc Add'l SOMAN
		POT Bay Arrangements prior to 6/1/99 - 2-Fiber Cross-Connect, per cross-connect	I		CLO	PE1B2	38.79										
		POT Bay Arrangements prior to 6/1/99 - 4-Fiber Cross-Connect, per cross-connect	I		CLO	PE1B4	52.31										
		Collocation Cable Records - per request *	I		CLO	PE1CR		1,711.00	1,168.00								
		Collocation Cable Records - VG/DS0 Cable, per cable record *	I		CLO	PR1CD		925.06	925.06								
		Collocation Cable Records - VG/DS0 Cable, per each 100 pair *	I		CLO	PE1CO		18.05	18.05								
		Collocation Cable Records - DS1, per T1TIE *	I		CLO	PE1C1		8.45	8.45								
		Collocation Cable Records - DS3, per T3TIE *	I		CLO	PE1C3		29.57	29.57								
		Collocation Cable Records - Fiber Cable, per cable record *	I		CLO	PE1CB		279.42	279.42								
		Physical Collocation - Security Escort - Basic, per Half Hour	I		CLO	PE1BT		33.91	21.49								
		Physical Collocation - Security Escort - Overtime, per Half Hour	I		CLO	PE1OT		44.17	27.76								
		Physical Collocation - Security Escort - Premium, per Half Hour	I		CLO	PE1PT		54.42	34.02								
		Physical Caged Collocation-App Cost(initial & sub)-Planning, per request	I		CLO	PEIAC	16.16	2,903.66	2,903.66								
		Physical Caged Collocation-Space Prep-Grounding, per location	I		CLO	PE1BB	4.32										
		Physical Caged Collocation-Space Prep-Power Delivery, per 40 amp Feed			CLO	PE1SN		142.40									
		Physical Caged Collocation-Space Prep-Power Delivery, per 100 amp Feed			CLO	PE1SO		185.72									
		Physical Caged Collocation-Space Prep-Power Delivery, per 200 amp Feed			CLO	PEISP		242.05									
		Physical Caged Collocation-Space Enclosure-Cage Preparation, per first 100 sq. ft.			CLO	PE1S1	110.97										
		Phycical Caged Collocation-Space Enclosure-Cage Preparation2, per add'l 50 sq. ft.			CLO	PE1S5	55.49										
		Physical Caged collocation-Cable Installation-Entrance Fiber Structure, interduct per ft.	I		CLO	PE1CP	0.0156										
		Phycical Caged Collocation-Cable Installation-Entrance Fiber, per cable	I		CLO	PE1CQ		944.27									
		Physical Caged Collocation-Floor Space-Land & Buildings, per sq. ft.	I		CLO	PE1FS	4.14										
		Physical Caged Collocation-Cable Support Structure-Cable Racking, per entrance cable			CLO	PE1CS	21.47										
		Plhysical Caged Collocation-Power-Power Construction, per amp DC plant□			CLO	PE1PN	3.55										
		Physical Caged Collocation-Power-Power Consumption,per amp AC usage			CLO	PE1PO	2.03										
		Physical Caged Collocation-2-wire Cross Connects-Voice Grade ckts, per ckt.			CLO	PE12C	0.0475	7.69									
		Physical Caged Collocation-4-wire Cross Connects-Voice Grade Ckts, per ckt.			CLO	PE14C	0.0475	7.69									
		Physical Caged Collocation-DS1 Cross Connects-connection to DCS, per ckt.			CLO	PE11S	7.68	41.65									
		Physical Caged Collocation-DS1 Cross Connects-Connection to DSX, per ckt.			CLO	PE11X	0.38	41.65									
		Physical Caged Collocation-DS3 Cross Connects-Connection to DCS, per ckt.			CLO	PE13S	53.96	298.03									
		Physical Caged Collocation-DS3 Cross Connects-Connection to DSX, per ckt.			CLO	PE13X	9.32	298.03									
		Physical Caged Collocation-Security Access-Access Cards, per 5 Cards			CLO	PE1A2		76.10									
		Physical Collocation - Co-Carrier Cross Connects - Fiber Cable Support Structure, per linear ft.	I		CLO	PE1ES	0.0031										
		Physical Collocation - Co-Carrier Cross Connects - Copper/Coax Cable Support Structure, per lin. ft.			CLO	PE1DS	0.0045										
		Physical Collocation - Co-Carrier Cross Connects - Fiber Cable Support Structure, per cable			CLO			555.03									
		Physical Collocation - Co-Carrier Cross Connects - Copper/Coax Cable Support Structure, per cable			CLO			555.03									
		Cage Construction - Land and Building - per 100sf cage					594.04										
		Cage Construction - Land and Building - per sf cage					5.94										
		Entrance Fiber					2.56	944.27									
		Entrance Fiber - Structure Charge - per foot innerduct					0.156										
ADJACENT COLLOCATION																	
		Adjacent Collocation - Space Charge per Sq. Ft.	I		CLO	PE1JA	0.069										
		Adjacent Collocation - Electrical Facility Charge per Linear Ft.	I		CLO	PE1JC	6.06										
		Adjacent Collocation - 2-Wire Cross-Connects	I		CLO	PE1P2	0.033	33.82	31.92								
		Adjacent Collocation - 4-Wire Cross-Connects	I		UEA,UHL,UDL,UCL,CLO	PE1P4	0.066	33.94	31.95								
		Adjacent Collocation - DS1 Cross-Connects	I		USL,CLO	PE1P1	1.51	53.27	40.16								
		Adjacent Collocation - DS3 Cross-Connects	I		CLO	PE1P3	19.26	52.37	38.89								
		Adjacent Collocation - 2-Fiber Cross-Connect	I		CLO	PE1F2	3.82	52.37	38.89								
		Adjacent Collocation - 4-Fiber Cross-Connect	I		CLO	PE1F4	6.79	65.03	51.55								

**BellSouth/MCIm
Tennesse
Rates
for
Collocation**

CATEGORY	NOTE	UNBUNDLED NETWORK ELEMENT	Interim Indicator	Zone	BCS	USOC	RATES ($) Nonrecurring Rec	Nonrecurring First	Nonrecurring Add'l	Nonrecurring Disconnect First	Nonrecurring Disconnect Add'l	OSS RATES ($) Svc Order Submitted Elec per LSR SOMEC	Svc Order Submitted Manually per LSR SOMAN	Incremental Charge - Manual Svc Order vs. Electronic-1st SOMAN	Incremental Charge - Manual Svc Order vs. Electronic-Add'l SOMAN	Incremental Charge - Manual Svc Order vs. Electronic-Disc 1st SOMAN	Incremental Charge - Manual Svc Order vs. Electronic-Disc Add'l SOMAN
		Adjacent Collocation - Application Fee	I		CLO	PE1JB		3,160.00									
		Adjacent Collocation - 120V, Single Phase Standby Power Rate per AC Breaker Amp	I		CLO	PE1FB	5.60										
		Adjacent Collocation - 240V, Single Phase Standby Power Rate per AC Breaker Amp	I		CLO	PE1FD	11.22										
		Adjacent Collocation - 120V, Three Phase Standby Power Rate per AC Breaker Amp	I		CLO	PE1FE	16.82										
		Adjacent Collocation - 277V, Three Phase Standby Power Rate per AC Breaker Amp	I		CLO	PE1FG	38.84										
PHYSICAL COLLOCATION IN THE REMOTE SITE																	
		Physical Collocation in the Remote Site - Application Fee *	I		CLORS	PE1RA		872.95	872.95								
		Cabinet Space in the Remote Site per Bay/ Rack *	I		CLORS	PE1RB	219.37										
		Physical Collocation in the Remote Site - Security Access - Key *	I		CLORS	PE1RD		26.23	26.23								
		Physical Collocation in the Remote Site - Space Availability Report per Premises Requested *	I		CLORS	PE1SR		232.12	232.12								
		Physical Collocation in the Remote Site - Remote Site CLLI Code Request, per CLLI Code Requested *	I		CLORS	PE1RE		75.23	75.23								
		Remote Site DLEC Data (BRSDD), per Compact Disk, per CO	I		CLORS	PE1RR		234.15									
PHYSICAL COLLOCATION IN THE REMOTE SITE - ADJACENT																	
		Remote Site-Adjacent Collocation - AC Power, per breaker amp	I		CLORS	PE1RS	6.27										
		Remote Site-Adjacent Collocation - Real Estate, per square foot	I		CLORS	PE1RT	0.134										
VIRTUAL COLLOCATION (VC)																	
		VC - Application Cost - application, per central office						2,633.00									
		VC - Cable Installation Cost Per Cable						1,749.00									
		VC - Floor space per square foot					3.910										
		VC - Floor space power, per ampere					6.790										
		VC - Cable support structure, per entrance cable					17.870										
		VC - 2-wire cross connects					0.570	11.62	9.90	10.38	8.66						
		VC - 4-wire cross connects					0.570	11.81	10.04	10.44	8.67						
		VC - DS1 cross connects					1.320	32.22	17.76	10.46	8.75						
		VC - DS3 cross connects					12.320	29.97	16.30	12.03	8.99						
		VC - Security Escort - Basic, Per Half Hour						33.15	20.44								
		VC - Security Escort - Overtime, Per Half Hour						41.50	25.61								
		VC - Security Escort - Premium, Per Half Hour						49.86	30.79								
		VC - 2-wire Cross connects - Incremental cost - manual svc order vs electronic						2.07	2.81	.067	1.41						
		VC - 4-wire cross connects - Incremental cost - manual svc order vs. electronic						2.07	2.81	.067	1.41						
		VC - DS1/DS3 cross connects - Incrm. Cost - manual svc order vs. electronic						2.07	2.81	.067	1.41						
	* Interim rates which are subject to true-up.																
	NOTE: If Security Escort and/or Add'l Engineering Fees become necessary for remote site collocation, the Parties will negotiate appropriate rates.																

BellSouth/MCIm
Tennessee
Rates
For
Number Portability

CATEGORY	NOTES	UNBUNDLED NETWORK ELEMENT	Interim Indicator	Zone	BCS	USOC	RATES ($) Rec	Nonrecurring First	Nonrecurring Add'l	Disconnect First	Disconnect Add'l	OSS RATES ($) Svc Order Submitted Elec per LSR SOMEC	vc Order Submitted Manually per LSR SOMAN	ncremental Charge - Manual Svc Order vs. Electronic-1st SOMAN	ncremental Charge - Manual Svc Order vs. SOMAN	ncremental Charge - Manual Svc Order vs. Electronic-Disc SOMAN	ncremental Charge - Manual Svc Order vs. SOMAN
	NOTE: All elements marked with an "I" in column D and shaded are interim subject to retroactive true-up.																
INTERIM SERVICE PROVIDER NUMBER PORTABILITY - RCF																	
		RCF, per number ported (Business Line)	I			TNPBL	1.50										
		RCF, per number ported (Residence Line)	I			TNPRL	1.25										
		RCF, add'l capacity for simultaneous call forwarding, per additional path	I				0.50										
		RCF, per service order, per location (Business)	I			TNPBD		25.00	25.00					19.99	19.99	19.99	19.99
		RCF, per service order, per location (Residence)	I			TNPRD		25.00	25.00					19.99	19.99	19.99	19.99
INTERIM SERVICE PROVIDER NUMBER PORTABILITY - DID																	
		SPNP - DID, Per number Ported, Residence						0.94									
		SPNP - DID, Per number Ported, Business						0.94									
		SPNP - DID, Per Service Order, Per Location						0.74									
		SPNP - DID, Per trunk termination, initial					7.86	129.66									
		SPNP - DID, Per trunk termination, subsequent					7.69	37.32									
		SPNP - Manual Svc Order vs electronic						20.35	21.09	13.32	14.06						
		SPNP - Incremental Cost - Manual Svc Order vs. Electronic						20.35	2109	13.32	14.06						
SERVICE PROVIDER NUMBER PORTABILITY (RIPH)																	
		SPNP - RIPH, Functionality, Per Central Office						180.61									
		SPNP - RIPH, Functionality, Per Rearrangment						68.83									

BellSouth/MCI
Tennesee
Rates
For
Billing Usage

CATEGORY	NOTES	UNBUNDLED NETWORK ELEMENT	Interim	Zone	BCS	USOC	RATES ($)					OSS RATES ($)					
								Nonrecurring		Nonrecurring Disconnect		Svc Order Submitted Elec per LSR	vc Order Submitted Manually per LSR	ncremental Charge - Manual Svc Order vs. Electronic-1st	ncremental Charge - Manual Svc Order vs.	ncremental Charge - Manual Svc Order vs. Electronic-Disc	ncremental Charge - Manual Svc Order vs.
							Rec	First	Add'l	First	Add'l	SOMEC	SOMAN	SOMAN	SOMAN	SOMAN	SOMAN
ODUF/EDOUF/ADUF/CMDS																	
	OPTIONAL DAILY USAGE FILE (ODUF)																
		ODUF: Recording, per message				N/A	0.0000044										
		ODUF: Message Processing, per message				N/A	0.0027366										
		ODUF: Message Processing, per Magnetic Tape provisioned				N/A	52.75										
		ODUF: Data Transmission (CONNECT:DIRECT), per message				N/A	0.0000339										

TABLE OF CONTENTS

Attachment 2
LOCAL RESALE

SECTION 1. GENERAL TERMS AND CONDITIONS FOR RESALE 2

SECTION 2. PROVISION OF SERVICES AVAILABLE FOR RESALE. 4

SECTION 3. MAINTENANCE OF SERVICES: 7

SECTION 4. ESTABLISHMENT OF SERVICES: 7

SECTION 5. PAYMENT AND BILLING ARRANGEMENTS 7

SECTION 6. DISCONTINUANCE OF SERVICE 7

SECTION 7. APPLICABLE OSS RATES 7

EXHIBIT A 8

EXHIBIT B 9

ATTACHMENT 2

LOCAL RESALE

Section 1. General Terms and Conditions for Resale

1.1 At the request of MCIm, and pursuant to the requirements of the Act, State Commission rulings, and FCC Rules and Regulations in effect, BellSouth shall make available to MCIm for resale any retail Telecommunications Service that BellSouth currently provides or may offer hereafter, including, but not limited to, vertical features and extended area service plans. The retail Telecommunications Services provided by BellSouth to MCIm pursuant to this Agreement are collectively referred to as "Local Resale."

1.1.1 Local Resale shall include all Telecommunications Services offered by BellSouth to parties other than Telecommunications Carriers, on a retail basis consistent with Section 251 (c)(4)(A) of the Act and 47 CFR 51.607(b), regardless of the particular tariff or other method by which such Telecommunications Services are offered. Any service offering to end users on a retail basis out of the access tariffs that does not comport with the Act or any rules or regulations promulgated thereunder, is subject to the resale discount requirements.

1.2 BellSouth will not prohibit, nor impose unreasonable or discriminatory conditions or limitations on, the resale of its Telecommunications Services.

1.3 Features and Functions available for Resale. For all Telecommunications Services purchased by MCIm for resale as provided herein, BellSouth shall make available to MCIm all functions and features associated with any particular Telecommunications Service to the same extent such functions and features are made available to BellSouth's retail customers for that particular Telecommunications Service. Such features and functions may include, but shall not be limited to:

(a) Dial tone and ring
(b) Capability for either dial pulse or touch tone recognition
(c) Capability to complete calls to any location
(d) 1+ IntraLATA toll calling
(e) 1+ InterLATA toll calling
(f) CIC ("dial around") dialing (10-10-XXX)

1.4 BellSouth shall provide MCIm advance notice, via Internet posting of price changes and promotions and of discontinuance or grandfathering of services, or features or functions of services available for resale, and introduction of any services or features or functions of services. Such notice shall be the greater of

45 days or the amount of time provided to BellSouth's own retail sales organization.

1.5 Pursuant to 47 CFR 51.617 (b), any switched access charges associated with interexchange carrier access to the resold local exchange lines will be billed by, and due to, BellSouth from the appropriate interexchange carrier. No such switched access charges are to be assessed to MCIm, unless MCIm is acting as the interexchange carrier.

1.6 Pursuant to 47 CFR Section 51.617 (a), BellSouth will bill MCIm end user common line charges, and the charge for changing the designated primary interexchange carrier, identical to the end user common line charges BellSouth bills its end users. No wholesale discount shall apply to these charges.

1.7 BellSouth will provide MCIm with at least the capability to provide an MCIm subscriber with the same level of service quality as BellSouth provides its own subscribers, subsidiaries, Affiliates, end-users or any third party with respect to all Telecommunications Services.

1.8 The specific business process requirements and OSS interface requirements for Local Resale are set forth in Attachment 8 of this Agreement.

1.9 BellSouth shall make available Telecommunications Services for resale at the wholesale discount set forth in Exhibit A of this Attachment and subject to the exclusions and limitations set forth in Exhibit B to this Attachment. Neither Party, however, waives its rights to appeal or otherwise challenge any decision regarding resale that resulted in the discount rates or the exclusions and limitations. Both Parties reserve the right to pursue any and all legal and/or equitable remedies, including appeals of any decisions. If such appeals or challenges result in changes in the discount rates or exclusions and limitations, the Parties agree that appropriate modifications to this Agreement will be made promptly to make its terms consistent with the outcome of the appeal**.**

1.10 MCIm may purchase resale services from BellSouth for its own use in operating its business, as long as MCIm orders services through resale interfaces, i. e., the Local Carrier Service Center (LCSC) and/or appropriate resale account teams pursuant to Attachment 8 of this Agreement.

1.11 MCIm will be the customer of record for all Local Resale purchased from BellSouth. Except as specified herein, BellSouth will take orders from, bill and expect payment from MCIm for all Local Resale.

1.12 BellSouth will continue to bill the end user for any services that the end user specifies it wishes to receive directly from BellSouth.

1.13 Local Resale is furnished subject to the condition that it will not be used for any unlawful purpose.

1.14 The Parties will work cooperatively with each other and with law enforcement agencies to address any unlawful use of service. Any potential or perceived unlawful use of service by an MCIm end user will be referred to MCIm for resolution with the proper authorities.

1.15 BellSouth's Inside Wire Maintenance Service Plan shall be made available for resale to MCIm at the same rates, terms and conditions as BellSouth provides to its own end users and without the wholesale discount.

1.16 Recovery of charges associated with implementing Number Portability through monthly charges assessed to end users has been authorized by the FCC. This end user line charge will be billed to MCIm in accordance with FCC rules and will be filed in BellSouth's FCC No. 1. This charge will not be discounted.

Section 2. Provision of Services Available for Resale.

2.1 MCIm may resell Telecommunications Services subject to Exhibit B of this Attachment and the following:

2.1.1 The resale of telecommunications services shall be limited to users and uses conforming to the class of service restrictions (i.e., cross-class selling).

2.1.2 Usage allowances described in BellSouth's Tariffs for any particular service (e.g., by way of example only and not as a limitation, directory assistance free usage allowance) shall not be aggregated by MCIm for more than one end user. Volume discount offerings (e.g., by way of example only and not as a limitation, Watsaver® service) may be aggregated by MCIm for multiple end users.

2.1.3 MCIm shall not resell Telecommunications Services in a geographic area in which MCIm is not authorized by law to provide exchange service or exchange access.

2.2 BellSouth shall ensure that tariff restrictions regarding resale shall be consistent with the orders of the State Commission and FCC orders pertaining to resale.

2.3 Requirements for Specific Services

2.3.1 <u>Lifeline and Link-up</u>. BellSouth shall make available for resale in accordance with Exhibit B to this Attachment and with Commission and FCC rules and regulations Lifeline and Link-up Services on the terms and

conditions set forth in BellSouth's applicable tariffs. Such services shall be available to MCIm for resale only to those MCIm subscribers who meet the qualifications as set forth in applicable regulations. BellSouth shall indicate with a USOC on the customer service record if a customer is subscribing to Lifeline or Linkup. MCIm shall comply with all aspects of the FCC's and the Commission's orders and rules implementing Lifeline and Link-up programs. To the extent other Voluntary Federal Subscriber Financial Assistance Programs are offered by BellSouth, such programs shall be offered to MCIm on terms and conditions as required by Applicable Law.

2.3.2 Grandfathered Services. BellSouth shall offer for resale to MCIm all grandfathered services on the same terms and conditions under which such services are offered to BellSouth's retail end users. Such services will be available for resale only to those MCIm subscribers who would be eligible to purchase the service from BellSouth. For purposes of this Attachment, a grandfathered service is a service that BellSouth offers to retail end users who were subscribers of such service at the time the service was grandfathered, but which BellSouth does not make available to new end users or to end users who were not subscribers of such service at the time the service was grandfathered.

2.3.3 N11 Service. BellSouth shall make available for resale any new and existing N11 services in accordance with Exhibit B. MCIm shall have the right to resell 911 or E911 services, in accordance with Exhibit B.

2.3.4 Customer Specific Offerings including Contract Service Arrangements and Other Customer Specific Offerings ("CSAs"). CSAs shall be available for resale, at the same rates, terms and conditions offered to BellSouth's end users, and in accordance with State Commission and FCC Rules and Regulations less the wholesale discount set forth in Exhibit A.

2.3.5 Promotions.

2.3.5.1 For purposes of this Agreement, a BellSouth promotion will be considered "short-term" if: the promotion is offered to subscribers for a period of 90 days or less, and is not used to evade the wholesale rate obligation to MCIm, for example, by offering a sequential series of 90-day or less promotional rates to BellSouth subscribers.

2.3.5.2 BellSouth shall make Telecommunications Services subject to short-term promotions available to MCIm at the short term promotional rate, according to Exhibit B, or the discounted resale rate, according to Exhibit A, at MCIm's option.

2.3.5.3 MCIm shall offer a promotion obtained from BellSouth to customers who would qualify for the promotion if they received it directly from BellSouth; however, MCIm shall otherwise remain free to package and price the resold promotion without restriction. A BellSouth promotion for a particular service shall not limit MCIm's ability to obtain that service at the normal rate less the wholesale discount and resell it without regard to subscribers' eligibility for the promotion.

2.3.6 Special assemblies for Telecommunications Services shall be available for resale, at the same terms and conditions offered to BellSouth's end users, and in accordance with State and FCC Rules and Regulations. Special assembly shall be made available for resale at the price of the special assembly less the wholesale discount.

2.3.7 To the extent BellSouth offers, pursuant to its Tariffs, any services the rate for which varies depending upon the volume purchased or the term for which the subscribers commit to purchase such service, BellSouth shall offer such services on the same terms and conditions to MCIm at the wholesale discount rate specified in Exhibit A to this Attachment.

2.3.8 Pay Phone Service

2.3.8.1 BellSouth shall make available to MCIm for resale all public telephone access services (pay phone), including all local services, features, and functionalities and with at least the same level of standards as BellSouth provides such services to its affiliates and independent pay telephone providers. Such services shall be made available at discounts as set forth in Exhibit A and subject to the terms of Exhibit B of this Attachment.

2.3.9 Voice Mail Service

2.3.9.1 Where available to BellSouth's end users, BellSouth shall provide the following Telecommunications Services at a discount for use in conjunction with voice mail services:

- Message Waiting Indicator ("MWI") stutter dialtone and message waiting light feature capabilities
- CF/Busy (Call Forward Busy Line)
- CF/DA (Call Forward Don't Answer)

2.3.9.2 The services listed in BellSouth's Messaging Services Information Package shall be made available for resale without the wholesale discount, on an integrated basis.

2.3.10 Hospitality Service. BellSouth shall provide to MCIm, for resale at the wholesale discount, hospitality lines (e.g., hotel/motel and hospital) with the same features and functions that it provides to its own end users.

2.3.11 BellSouth shall provide for resale all Advanced Intelligent Network ("AIN") services, and all features and functions available with such services, under the same terms and conditions as BellSouth makes them available to its own retail customers.

Section 3. Maintenance of Services:

3.1 All maintenance of Services for resale will be done according to the maintenance requirements of Attachment 8 of this Agreement.

Section 4. Establishment of Services:

4.1 Establishment of Services for resale will be done according to the requirements of Attachment 8 of this Agreement.

Section 5. Payment and Billing Arrangements

5.1 Payment and billing arrangements for resale will be done according to the requirements of Attachment 8 of this Agreement. BellSouth will not perform billing and collection services on MCIm's behalf for MCIm's end users as a result of the execution of this Agreement.

Section 6. Discontinuance of Service

6.1 Discontinuance of Service to MCIm and MCIm's end users will be subject to the provisions of Attachment 8 of this Agreement.

Section 7. Applicable OSS Rates

7.1 Rates applicable to OSS for resale are set forth in Attachment 1, Table 1 of this Agreement.

EXHIBIT A

PAGE 1 OF 1

APPLICABLE DISCOUNTS

The telecommunications services available for purchase by MCIm for the purposes of resale to MCIm end users shall be available at the following discount off of the retail rate.

DISCOUNT*

STATE	RESIDENCE	BUSINESS	CSAs***
ALABAMA	16.3%	16.3%	
FLORIDA	21.83%	16.81%	
GEORGIA	20.3%	17.3%	
KENTUCKY	16.79%	15.54%	
LOUISIANA	20.72%	20.72%	*9.05%*
MISSISSIPPI	15.75%	15.75%	
NORTH CAROLINA	21.5%	17.6%	
SOUTH CAROLINA	14.8%	14.8%	*8.98%*
TENNESSEE**	16%	16%	

* When MCIm provides Resale service in a cross boundary area (areas that are part of the local serving area of another state's exchange) the rates, regulations and discounts for the tariffing state will apply. Billing will be from the serving state.

** In Tennessee, if MCIm provides its own operator services and directory services, the discount shall be 21.56%.

*** Unless noted in this column, the discount for Business will be the applicable discount rate for CSAs.

Exhibit B
Page 1 of 2

EXCLUSIONS AND LIMITATIONS
ON SERVICES AVAILABLE FOR RESALE

	Type of Service	AL		FL		GA		KY		LA	
		Resale?	Discount?	Resale?	Discount?	Resale?	Discount?	Resale?	Discount?	Resale?	Discount?
1.	Grandfathered Services (Note 1)	Yes	Yes	Yes	Yes	Yes	Yes	Yes	Yes	Yes	Yes
2.	Contract Service Arrangements	Yes	Yes	Yes	Yes	Yes	Yes	Yes	Yes	Yes	Yes
3.	Promotions - > 90 Days(Note 2)	Yes	Yes	Yes	Yes	Yes	Yes	Yes	Yes	Yes	Yes
4.	Promotions - ≤ 90 Days (Note 2)	Yes	No	Yes	No	Yes	No	No	No	Yes	No
5.	Lifeline/Link Up Services	Yes	Yes	Yes	Yes	Yes	Yes	Note 3	Note 3	Yes	Yes
6.	911/E911 Services	Yes	Yes	Yes	Yes	Yes	Yes	Yes	Yes	No	No
7.	N11 Services	Yes	Yes	Yes	Yes	Yes	Yes	No	No	No	No
8.	AdWatch^{SM} Svc (See Note 4)	Yes	Yes	Yes	Yes	Yes	Yes	Yes	Yes	Yes	Yes
9.	Voice mail/messaging services	Yes	No	Yes	No	Yes	No	Yes	No	Yes	No
10.	Mobile Services	Yes	No	Yes	No	Yes	No	Yes	No	Yes	No
11.	Federal Subscriber Line Charges	Yes	No	Yes	No	Yes	No	Yes	No	Yes	No
12.	Non-Recurring Charges	Yes	Yes	Yes	Yes	Yes	Yes	Yes	Yes	Yes	Yes
13.	End User Line Charge – Number Portability	Yes	No	Yes	No	Yes	No	Yes	No	Yes	No
14.	Public Telephone Access Service (PTAS)	Yes	Yes	Yes	Yes	Yes	Yes	Yes	Yes	Yes	Yes

	Type of Service	MS		NC		SC		TN	
		Resale?	Discount?	Resale?	Discount?	Resale?	Discount?	Resale?	Discount?
1.	Grandfathered Services (Note 1)	Yes	Yes	Yes	Yes	Yes	Yes	Yes	Yes
2.	Contract Service Arrangements	Yes	Yes	Yes	Yes	Yes	Yes	Yes	Yes
3.	Promotions - > 90 Days(Note 2)	Yes	Yes	Yes	Yes	Yes	Yes	Yes	No
4.	Promotions - ≤ 90 Days (Note 2)	Yes	No	Yes	No	Yes	No	No	No
5.	Lifeline/Link Up Services	Yes	Yes	Yes	Yes	Yes	Yes	Yes	Yes
6.	911/E911 Services	Yes	Yes	Yes	Yes	Yes	Yes	Yes	Yes
7.	N11 Services	Yes	Yes	Yes	Yes	No	No	Yes	Yes
8.	AdWatch^{SM} Svc (See Note 4)	Yes	Yes	Yes	Yes	Yes	Yes	Yes	Yes
9.	Voice mail/messaging services	Yes	No	Yes	No	Yes	No	Yes	No
10.	Mobile Services	Yes	No	Yes	No	Yes	No	Yes	No

Exhibit B
Page 2 of 2

11.	Federal Subscriber Line Charges	Yes	No	Yes	No	Yes	No	Yes	No
12.	Non-Recurring Charges	Yes	Yes	Yes	Yes	Yes	Yes	Yes	No
13.	End User Line Charge – Number Portability	Yes	No	Yes	No	Yes	No	Yes	No
14.	Public Telephone Access Service (PTAS)	Yes	Yes	Yes	Yes	Yes	No	Yes	Yes

Applicable Notes:

1. **Grandfathered services** can be resold only to existing subscribers of the grandfathered service.
2. Where available for resale, **promotions** will be made available only to end users who would have qualified for the promotion had it been provided by BellSouth directly.
3. **Lifeline/Link Up** services may be offered only to those subscribers who meet the criteria that BellSouth currently applies to subscribers of these services as set forth in Sections A3 and A4 of the BellSouth General Subscriber Services Tariff.
4. AdWatch℠ Service is tariffed as BellSouth® AIN Virtual Number Call Detail Service.

TABLE OF CONTENTS

Attachment 3
NETWORK ELEMENTS

Section 1.	Introduction	1
Section 2.	Unbundled Network Elements	1
Section 3.	Standards for Network Elements	5
Section 4.	Loop	6
Section 5.	Unbundled Network Element Combinations	30
Section 6.	Dark Fiber	36
Section 7.	Local Switching	38
Section 8.	Operator Services	47
Section 9.	Shared Transport	47
Section 10.	Dedicated Transport	47
Section 11.	Signaling Link Transport	53
Section 12.	Signaling Transfer Points (STPs)	54
Section 13.	Service Control Points/Databases	58
Section 14.	Tandem Switching	70
Section 15.	Additional Requirements	72
Section 16.	Basic 911 and E911	72
Section 17.	Directory Assistance Data	72
Appendix I		

ATTACHMENT 3

NETWORK ELEMENTS

Section 1. Introduction

1.1 BellSouth shall provide unbundled Network Elements in accordance with this Agreement and all Applicable Law. The price for each unbundled Network Element is set forth in Attachment I of this Agreement. MCIm may order unbundled Network Elements and combinations of unbundled Network Elements in accordance with this Agreement. MCIm may order Existing Combinations and Typical Combinations as set forth in subsection 2.4 of this Attachment.

Section 2. Unbundled Network Elements

2.1 BellSouth shall offer Network Elements to MCIm on an unbundled basis at rates and on terms and conditions that are just, reasonable, and non-discriminatory and in accordance with the terms and conditions of this Agreement. BellSouth shall provide MCIm with unbundled Network Elements of at least the same level of quality as BellSouth provides itself, its Customers, subsidiaries, or Affiliates, or any third party. If BellSouth denies MCIm access to any unbundled Network Element based on a claim that it is not Technically Feasible, BellSouth shall have the full burden of proving that the provision of access to that Network Element is not Technically Feasible. To the extent BellSouth proves that provision of a Network Element is not Technically Feasible, BellSouth shall cooperate with MCIm to identify alternative suitable arrangements.

2.2 BellSouth shall permit MCIm to connect MCIm's facilities or facilities provided to MCIm by third parties with each of BellSouth's unbundled Network Elements at any Technically Feasible Demarcation Point, and BellSouth shall provide MCIm access to the MCIm side of such Demarcation Points.

2.3 MCIm may use one or more unbundled Network Elements to provide any telecommunications service utilizing any feature, function, capability, or service option that such Network Element(s), or combination of Network Elements, are capable of providing or any feature, function, capability, or service option that is described in the technical references identified herein.

2.3.1 MCIm may, at its option, designate any Technically Feasible method of access to demarcation points of unbundled Network Elements, including access to demarcation points currently or previously in use.

2.3.2 MCIm may, at its option, combine, at demarcation points, a Network Element with any other Network Element to the extent technically feasible.

2.4 At MCIm's request, BellSouth shall provide Existing Combinations of Network Elements to MCIm. Existing Combinations of Network Elements are those that are actually physically connected at the time the order is placed. This includes, but is not limited to, the combination of Network Element Platform or UNE-P and the combination of Loops and Dedicated Transport. The price for these combinations of Network Elements shall be based upon applicable FCC and Commission rules and shall be set forth in Attachment 1 of this Agreement. For Existing Combinations of Network Elements, BellSouth will use its best efforts to ensure that MCIm's ability to provide services will not be disconnected, interrupted, or otherwise modified in order to migrate to MCIm. At MCIm's request, BellSouth shall provide Typical Combinations of Network Elements to MCIm. Typical Combinations are those that are ordinarily combined within the BellSouth network, in the manner which they are typically combined. Thus, MCIm may order Typical Combinations of Network Elements, even if the particular Network Elements being ordered are not actually physically connected at the time the order is placed.

2.4.1 BellSouth's provision of Existing Combinations and Typical Combinations of Loop/Dedicated Transport must comply with the following requirements:

2.4.1.1 The Loop/Dedicated Transport combination must provide completed end-to-end Cross Connection of the channels designated by MCIm.

2.4.1.2 The Loop/Dedicated Transport combination must provide multiplexing and/or concentration, format conversion, signaling conversion, and through-testing capabilities consistent with the underlying capabilities of the equipment deployed in the BellSouth network.

2.4.2 With respect to the Loop/Dedicated Transport combination, MCIm will be responsible for all Channel Facility Assignment (CFA).

2.4.3 The Loop/Dedicated Transport combination may utilize either multiplexing concentration or digital Cross Connection technology without requiring MCIm to collocate at all serving wire centers or at particular BellSouth serving wire centers. Types of these combinations include, but are not limited to, combinations of DS1 Transport and DS0 Loops and DS3 Transport and DS1 Loops.

2.4.4 BellSouth will not require MCIm to own or control any local exchange facilities as a condition of offering to MCIm any Network Element or combinations of Network Elements.

2.4.5 Unless requested by MCIm, BellSouth will not separate Existing Combinations.

2.5 BellSouth will identify to MCIm the location(s) of possible demarcation points available to MCIm to access unbundled Network Elements and MCIm will designate from these options the point(s) of demarcation between MCIm's network and BellSouth's network. BellSouth shall not require that a Demarcation Point exist between Network Elements in Typical Combinations and Existing Combinations.

2.6 Subject to subsection 1.4.1 of Attachment 1 of this Agreement, with respect to individual Network Elements described in this Attachment, charges in Attachment I are inclusive and no other charges apply. BellSouth and MCIm agree to attempt in good faith to resolve any alleged errors or omissions in Attachment 1.

2.7 This Attachment 3 describes the unbundled Network Elements which BellSouth shall provide to MCIm in accordance with FCC Rules as of the Effective Date of this Agreement:

Loop
Subloop elements
Network Interface Device
Local Circuit Switching (subject to FCC Rules and this Attachment)
Packet Switching (subject to FCC Rules and this Attachment)
Interoffice Transmission Facilities
- Shared Transport
- Dedicated Transport

Signaling and Call Related Databases
- Signaling Link Transport
- Signaling Transfer Points
- AIN Platform and Architecture

Tandem Switching
Dark Fiber
Loop Concentrator

2.8 In addition to the unbundled Network Elements set forth above, BellSouth shall provide to MCIm access to the following Network Elements, in accordance with FCC Rules, that are described in Attachment 9 of this Agreement:

E911/911

2.9 In addition to Network Elements described in subsections 2.7 and 2.8, MCIm may request Network Elements in accordance with the bona fide request process described in Part A of this Agreement. Additionally, if BellSouth provides any Network Element that is not identified in this Agreement, to any other telecommunications carrier, BellSouth shall make available the same Network Element to MCIm on rates, terms and conditions no less favorable to MCIm than those provided to such other telecommunications carrier.

2.10 To the extent BellSouth, in the course of facility maintenance and repair, utilizes available spare facilities in implementing repairs, BellSouth shall utilize for MCIm such spare facilities at Parity and on a nondiscriminatory basis.

2.11 BellSouth shall offer each Network Element individually and, at MCIm's request, shall offerTypical Combinations and Existing Combinations. BellSouth shall not be required to offer combinations other than Typical Combinations and Existing Combinations, but MCIm may order Network Elements individually and combine them itself into such other combinations. BellSouth shall not require MCIm to combine Network Elements. BellSouth shall not require MCIm to own or control any local exchange facilities as a condition of offering to MCIm any Network Element or combination.

Section 3. Standards for Network Elements

3.1 Each unbundled Network Element shall be furnished at a service level at least equal to the requirements set forth in the technical references referenced in Appendix 1 of this Attachment, as well as any performance or other requirements, identified herein. In the event Telcordia (formerly Bell Communications Research, Inc. ("Bellcore")), or industry standard (e.g., American National Standards Institute ("ANSI") technical reference or a more recent version of such reference sets forth a different requirement, MCIm and BellSouth may agree, where Technically Feasible, that such standard shall apply.

3.2 If one or more of the requirements set forth in this Agreement with respect to BellSouth's obligations to MCIm are in conflict, MCIm and BellSouth shall agree which requirements shall apply.

3.3 BellSouth shall provide each unbundled Network Element to MCIm at Parity and on a nondiscriminatory basis.

3.3.1 BellSouth shall provide to MCIm, upon request, engineering, design, performance and other network data sufficient for MCIm to determine that the requirements of this Section 3 are being met. In the event that such data indicates that the requirements of this Section 3 are

not being met, BellSouth shall, within ten (10) days, use its best efforts to cure any design, performance or other deficiency, or, if the failure is not susceptible to cure within ten (10) days, shall commence and continue its best efforts to correct such failure as soon as possible, and provide new data sufficient for MCIm to determine that such deficiencies have been cured.

3.3.2 BellSouth agrees to work cooperatively with MCIm to provide Network Elements that will meet MCIm's needs in providing Telecommunications Services to its subscribers, to the extent the services provided by MCIm are compatible with the type of Network Elements purchased by MCIm.

3.4 Unless otherwise requested by MCIm, each unbundled Network Element and the connections between unbundled Network Elements provided by BellSouth to MCIm shall be made available to MCIm at the same priority as BellSouth provides to itself, BellSouth's own subscribers, to a BellSouth Affiliate or to any other telecommunications carrier.

3.5 BellSouth shall provide MCIm with Network Elements (including combinations as described in this Attachment) in compliance with the performance standards set forth in Attachment 10 of this Agreement.

3.6 BellSouth shall provide MCIm with the reporting associated with Network Elements (including combinations as described in this Attachment) as set forth in Attachment 10 of this Agreement.

3.7 Technical and interface requirements are detailed in Appendix 1.

Section 4. Loop

4.1 Definition of Loop**.** A transmission facility between a distribution frame (or its equivalent) in BellSouth's Central Office and the Loop Demarcation Point (marking the end of BellSouth's control of the Loop) at an End-User Customer premises, including inside wire owned by BellSouth. The Loop includes all features, functions, and capabilities of such transmission facility. Those features, functions, and capabilities include, but are not limited to, Dark Fiber, attached electronics (except those electronics used for the provision of advanced services, such as Digital Subscriber Line Access Multiplexers), and line conditioning. The Loop includes, but is not limited to, DS1, DS3, fiber, and other high capacity Loops.

4.1.1 Special Construction. If a requested loop type is not available at a location requested by MCIm and cannot be made available other than through the Special Construction process, then MCIm can use the Special

Construction process to determine additional costs required to provide the loop type ordered. BellSouth shall not impose Special Construction charges on MCIm in circumstances where BellSouth would not impose such charges on its own retail customer to provide the loop necessary to offer the services requested by the retail customer.

4.2 The provisioning of service to MCIm will require cross-office cabling and cross-connections within the central office to connect the loop to a local switch or to other transmission equipment in collocation space. These cross-connects are a separate element and are not considered a part of the loop. Notwithstanding the foregoing, however, if MCIm's certified vendor provides the cross-office cabling, BellSouth shall not charge MCIm for such cross-office cabling.

4.3 BellSouth Order Coordination referenced in this Attachment includes two types: "Order Coordination" ("OC") and "Order Coordination - Time Specific" ("OC-TS").

4.3.1 "Order Coordination" refers to standard BellSouth service order coordination which is included in the price of SL2 voice loops and all digital loops. Order coordination is available as a chargeable option for unbundled copper loops. Order coordination for physical conversions will be scheduled at BellSouth's discretion during normal working hours on the committed due date and MCIm advised. The Parties will work cooperatively to schedule the physical conversion at a time mutually acceptable to both Parties. Where scheduling conflicts exist, the Parties will cooperate to resolve the conflicts. If BellSouth cannot accommodate MCIm's schedule, MCIm may submit a supplemental order requesting a later due date. On the new due date, the cooperative scheduling process will be repeated.

4.4 "Order Coordination – Time Specific" refers to service order coordination in which MCIm requests a specific time for a service order conversion to take place. This is a chargeable option, per LSR, for any coordinated order of SL2 and digital loops and is billed in addition to any applicable order coordination charges. MCIm may specify any date and time for order coordination – time specific conversions. If the time specified by MCIm requires BellSouth technicians to work outside of the normal provisioning times specified in subsection 3.2.2.4 of Attachment 8, overtime charges may apply in addition to any applicable order coordination and order coordination – time specific charges. Overtime charges will be applied according to actual costs based on type of force group required to perform the work, overtime hours worked and any special circumstances.

4.5 If MCIm modifies an order after being sent a Firm Order Confirmation (FOC) from BellSouth, MCIm shall reimburse BellSouth for any costs incurred by BellSouth to provision the original order that would not have been incurred to provision the modified order.

4.6 BellSouth will offer Unbundled Voice Loops (UVL) in two different service levels - Service Level One (SL1) and Service Level Two (SL2).

4.6.1 SL1 loops will be non-designed, will not have remote test points added, and will not come with any Order Coordination (OC) or engineering information/circuit make-up data. SL1 loops use a mechanized coordinated conversion process, for which no additional charge applies to MCIm. Upon issuance of an order in the service order system, SL1 loops will be activated on the due date in the same manner and time frames that BellSouth normally activates POTS-type loops for its customers. If MCIm requests work to be done for SL1s that requires BellSouth technicians to work outside normal work hours, overtime charges will be applied according to actual costs based on type of force group required to perform the work, overtime hours worked and any special circumstances.

4.6.1.1 Notwithstanding subsection 4.6.1 above, MCIm may order OC as a chargeable option on SL1 loops when reuse of existing facilities has been requested by MCIm. MCIm may also order OC-TS when a specified conversion time is requested. OC-TS is a chargeable option for any coordinated order and is billed in addition to the OC charge. An Engineering Information (EI) document can be ordered as a chargeable option. The EI document provides loop make up information which is similar to the information normally provided in a Design Layout Record ("DLR"). The chargeable options described in this paragraph shall be charged at the rates set forth in Attachment 1 of this Agreement.

4.6.2 SL2 loops shall have remote test points added, will be designed with a DLR provided to MCIm, and will be provided with order coordination, at no additional charge to MCIm.

4.7 In addition to the UVLs, BellSouth shall make available an Unbundled Copper Loop (UCL). The UCL will be a copper twisted pair loop that is unencumbered by any intervening equipment (e.g., filters, load coils, range extenders, digital loop carrier, or repeaters). The UCL will be offered in two versions - Short and Long. A short UCL (18 kft or less at 1300 ohms or less) will

be provisioned according to Resistance Design parameters. The long UCL (beyond 18kft, at 2800 ohms or less) will be used when MCIm wants to condition copper loops longer than 18kft by removing load coils and other intervening equipment. BST will only ensure electrical continuity and balance relative to tip and ring on UCLs.

4.7.1 The UCL will be a designed circuit, provisioned with a remote test point added and will come standard with a DLR.

4.7.2 The UCL is a dry cooper loop and is not intended to support any particular Telecommunications Service. MCIm will determine the type of service that will be provided over the loop.

4.7.3 The UCL loop shall be provided to MCIm in accordance with the technical references in Appendix 1 of this Attachment.

4.8 Left Blank Intentionally

4.9 Left Blank Intentionally

4.10 Left Blank Intentionally

4.11 MCIm will be responsible for providing BellSouth with a Service Profile Identifier (SPID) associated with a particular ISDN-capable loop and end user. With the SPID, BellSouth will be able to adequately test the circuit and ensure that it properly supports ISDN service.

4.12 Digital Subscriber Line Loops

BellSouth shall provide Digital Subscriber Line ("DSL") Capable Loops. A DSL Capable Loop is a copper Loop that allows for the transmission of signals using DSL technologies. This type of Loop can be 2-wire or 4- wire. This type of Loop must be non-loaded and comply with ANSI carrier serving area ("CSA") standards for bridge taps and gauges. In addition, at MCIm's request, BellSouth shall provide DSL Capable Loops using Revised Resistance Design standards.

4.12.1 "Digital Subscriber Line" or "DSL" refers to a set of service-enhancing copper technologies that are designed to provide digital communications services over copper loops either in addition to or instead of normal analog voice service. BellSouth shall allow MCIm to provide any form of DSL service that complies with industry standards, including but not limited to the following types of DSL services, whether or not BellSouth offers Advanced Services to the Customer on a particular Loop:

4.12.1.1 “ADSL” or “ASYMMETRIC DIGITAL SUBSCRIBER LINE” is a Passband digital loop transmission technology that typically permits the transmission of up to 8 Mbps downstream (from the central office to the end-user customer) and up to 1 Mbps digital signal upstream (from the end-user customer to the central office) over one copper pair.

4.12.1.2 "RADSL" or "RATE ADAPTIVE DIGITAL SUBSCRIBER LINE" is a form of ADSL that can automatically assess the condition of the Loop and optimize the line rate for a given line quality.

4.12.1.3 “HDSL” or “HIGH-DATA RATE DIGITAL SUBSCRIBER LINE” is a synchronous baseband DSL technology operating over one or more copper pairs. HDSL can offer 784 Kbps circuits over a single copper pair, T1 service over 2 copper pairs, or future E1 service over 3 copper pairs.

4.12.1.4 “HDSL2” or “HIGH-DATA RATE DIGITAL SUBSCRIBER LINE 2” is a synchronous baseband DSL technology operating over a single pair capable of transporting a bit rate of 1.544 Mbps.

4.12.1.5 “IDSL” or “ISDN DIGITAL SUBSCRIBER LINE” is a symmetrical, baseband DSL technology that permits the bi-directional transmission of up to 128 Kbps using ISDN CPE but not circuit switching.

4.12.1.6 “SDSL” or " SYMMETRIC DIGITAL SUBSCRIBER LINE” is a baseband DSL transmission technology that permits the bi-directional transmission from up to 160kbps to 2.048 Mbps on a single pair.

4.12.1.7 “VDSL” or “VERY HIGH SPEED DIGITAL SUBSCRIBER LINE” is a baseband DSL transmission technology that permits the transmission of up to 52 Mbps downstream (from the Central Office to the end-user customer) and up to 2.3 Mbps digital signal upstream (from the end-user customer to the Central Office). VDSL can also be 26 Mbps symmetrical, or other combinations.

4.12.1.8 "SPLITTERLESS ADSL" means the ITU-T Recommendation G.922.2 version of DMT where it is also referred to as DSL-lite, ADSL-lite, and plug and play DSL. Splitterless ADSL eliminates a splitter at the End User premises, but may still require a splitter at the DSLAM.

4.13 Integrated Digital Loop Carrier.

4.13.1 Where BellSouth uses Integrated Digital Loop Carrier ("IDLC") to provide the local loop, BellSouth shall make the local loop available to MCIm in one of the ways listed in subsections 4.13.1.1 through 4.13.1.4, where available:

4.13.1.1 moving the loops to a Digital Loop Carrier that is not integrated;

4.13.1.2 provide side door porting through the switch;

4.13.1.3 provide "DACS-door" porting (if the IDLC routes through a DACS prior to integration into the switch); or

4.13.1.4 removal of the circuit from the IDLC system onto all copper facilities to the main distribution frame.

4.13.1.5 BellSouth shall not charge MCIm any additional rates for the moving of Loops.

4.13.1.6 If the options listed in subsections 4.13.1 through 4.13.4 are not available, BellSouth shall utilize its special construction process to determine the additional costs required to provide one of those options, or to construct the copper plant necessary to provide the loop.

4.13.2 When Loops are provided over an IDLC system, BellSouth shall permit MCIm, at MCIm's discretion, and in accordance with FCC rules, the ability to collocate DSLAM or other DSL equipment at the Remote Terminal, if space exists, where the copper portion of the IDLC-provided Loop terminates, as provided in Section 1 of Attachment 5.

4.14. The following Sections pertain to the provisioning of DSL Capable Loops.

4.14.1 Provisioning and Installation of DSL Capable Loops. BellSouth shall provision and install DSL Capable Loops within the same time frames as designed analog Loops.

4.14.2 Loop Qualification Process. In accordance with Applicable Law, BellSouth shall make Loop qualification information, including, but not limited to, Loop length, bridge tap length and location, gauge size and changes, and the presence of loading coils, available to MCIm via mutually agreeable OSS interfaces at rates to be developed in

accordance with Attachment 1. BellSouth must provide this detailed Loop qualification information to MCIm prior to the ordering of Loops.

4.14.3 Conditioning. At MCIm's request, BellSouth shall condition Loops at the rates set forth on Attachment 1 of this Agreement as Unbundled Loop Modification ("ULM"). Conditioning means the removal from the Loop of any devices that may diminish the capability of the Loop to deliver high-speed switched wireline telecommunications capability, including xDSL service. Such devices include, but are not limited to, bridge taps, low pass filters and range extenders.

4.14.4 Access to NIDs. BellSouth shall permit MCIm to access the NID at the customer premises as required for MCIm's deployment of DSL Services.

4.14.5 Presumption of acceptability for deployment of an advanced services loop technology.

4.14.5.1 An advanced services loop technology is presumed acceptable for deployment under any one of the following circumstances, where the technology:

4.14.5.1.1 complies with existing industry standards; or

4.14.5.1.2 is approved by an industry standards body, the FCC, or any state Commission; or

4.14.5.1.3 has been successfully deployed by any carrier without significantly degrading the performance of other services.

4.14.5.2 BellSouth may not deny MCIm's request to deploy a technology that is presumed acceptable for deployment unless BellSouth demonstrates to the relevant state Commission that deployment of the particular technology will significantly degrade the performance of other advanced services or traditional voice band services.

4.14.5.3 Where MCIm seeks to establish that deployment of a technology falls within the presumption of acceptability under paragraph 4.14.5.1.3 of this Section, the burden is on MCIm to demonstrate to the state Commission that its proposed deployment meets the threshold for a presumption of acceptability and will not, in fact, significantly degrade the performance of other advanced services or traditional voice band services. Upon a successful

demonstration by MCIm before a particular state Commission, the deployed technology shall be presumed acceptable for deployment in other areas.

4.14.6 Provision of information on advanced services deployment.

4.14.6.1 BellSouth shall provide to MCIm, when MCIm seeks access to a loop or high frequency portion of the loop to provide advanced services:

(a) information with respect to the spectrum management procedures and policies that BellSouth uses in determining which services can be deployed;

(b) information with respect to the rejection of MCIm's provision of advanced services, together with the specific reason for the rejection; and

(c) information with respect to the number of loops using advanced services technology within the binder group and the type of technology deployed on those loops.

4.14.6.2 Where MCIm seeks access to a loop or a high frequency portion of a loop to provide advanced services, MCIm shall provide to BellSouth information on the type of technology that MCIm seeks to deploy.

4.14.6.2.1 Where MCIm asserts that the technology it seeks to deploy fits within a generic power spectral density (PSD) mask, it also shall provide Spectrum Class information for the technology.

4.14.6.2.2 Where MCIm relies on a calculation-based approach to support deployment of a particular technology, it shall provide BellSouth with information on the speed and power at which the signal will be transmitted.

4.14.6.3 MCIm also shall provide the information required under paragraph 4.14.6.2 of this Section when notifying BellSouth of any proposed change in advanced services technology that MCIm uses on the loop.

4.15 <u>Binder group management.</u>

4.15.1 With the exception of loops on which a known disturber is deployed, BellSouth shall not designate, segregate or reserve particular loops or binder groups for use solely by any particular advanced services loop technology.

4.15.2 To the extent either Party seeks designation of a technology as a known disturber, that Party should file a petition for declaratory ruling with the FCC seeking such designation.

4.15.3 Significant degradation of services caused by deployment of advanced services.

4.15.3.1 Where either Party claims that a deployed advanced service is significantly degrading the performance of other advanced services or traditional voiceband services, that Party shall notify the deploying Party and allow the deploying Party a reasonable opportunity to correct the problem. Where the Party whose services are being degraded does not know the precise cause of the degradation, it shall notify the other Party and any other carrier that may have caused or contributed to the degradation.

4.15.3.2 Where the degradation asserted under paragraph 4.15.3.1 of this Section remains unresolved by the deploying Party after a reasonable opportunity to correct the problem, the Party whose services are being degraded must establish before the state Commission that a particular technology deployment is causing the significant degradation.

4.15.3.3 Any claims of network harm presented to the deploying Party or, if subsequently necessary, the relevant state Commission, must be supported with specific and verifiable information.

4.15.3.4 Where a Party demonstrates that a deployed technology of the other Party is significantly degrading the performance of other advanced services or traditional voice band services, the Party deploying the technology shall discontinue deployment of that technology and migrate its customers to technologies that will not significantly degrade the performance of other such services.

4.15.3.5 Where the only degraded service itself is a known disturber, and the newly deployed technology satisfies at least one of the criteria for a presumption that it is acceptable for deployment under applicable FCC rules, the degraded service shall not prevail

against the newly-deployed technology.

4.15.4 Testing. BellSouth shall test each DSL Capable Loop using the same tests that BellSouth uses to test Loops for itself, its Customers, subsidiaries, or Affiliates, or any third party.

4.16 General: BellSouth shall provide MCIm access to the high frequency portion of the local loop ("High Frequency Spectrum") as an unbundled network element only where BellSouth is the voice service provider to the end user at the rates set forth in Attachment 1 of this Agreement. BellSouth shall provide MCIm with the High Frequency Spectrum irrespective of whether BellSouth chooses to offer xDSL services on the loop.

4.16.1 The High Frequency Spectrum is defined as the frequency range above the voice-band on a copper loop facility carrying analog circuit-switched voice-band transmissions. Access to the High Frequency Spectrum is intended to allow MCIm the ability to provide Digital Subscriber Line ("xDSL") data services to the end user for which BellSouth provides voice services. The High Frequency Spectrum shall be available for any version of xDSL presumed acceptable for deployment pursuant to 47 C.F.R. Section 51.230. BellSouth will continue to have access to the low frequency portion of the loop spectrum (from 300 Hertz to at least 3000 Hertz, and potentially up to 3400 Hertz, depending on equipment and facilities) for the purposes of providing voice service. MCIm shall use xDSL technology in accordance with T1.413 or other applicable industry standards.

4.16.2 The following loop requirements are necessary for MCIm to be able to access the High Frequency Spectrum on unconditioned, 2-wire copper loop. An unconditioned loop is a copper loop with no load coils, low-pass filters, range extenders, DAMLs or similar devices and minimal bridge taps consistent with ANSI T1.413 and T1.601. BellSouth will provide MCIm access to the Unbundled Loop Modification (Line Conditioning), in accordance with this Attachment. BellSouth will condition loops to enable MCIm to provide xDSL-based services on the same loops used to provide analog voice service, regardless of loop length. BellSouth is not required to condition a loop for access to the High Frequency Spectrum if conditioning of that loop significantly degrades BellSouth's voice service. If MCIm requests that BellSouth condition a loop longer than 18,000 ft. and such conditioning significantly degrades the voice services on the loop, MCIm shall pay for the loop to be restored to its original state.

4.16.3 BellSouth shall route the loop used to provide the voice service through a splitter in the central office and create a demarcation point for

access to the High Frequency Spectrum. The demarcation point will be the point where MCIm terminates its cable on the distributing frame. BellSouth shall provide, at the rates set forth in Attachment 1, the cross connection from the splitter to the demarcation point. MCIm's BellSouth certified vendor shall place the appropriate cable between MCIm's collocation space and the demarcation point.

4.16.4 MCIm shall have access to the Splitter for test purposes at a Bantam test jack, irrespective of where the Splitter is placed in the BellSouth premises.

4.17 Provisioning of High Frequency Spectrum and Splitter Space.

4.17.1 BellSouth will provide MCIm with access to the High Frequency Spectrum as follows:

4.17.1.1 BellSouth will install splitters within forty-two (42) calendar days of MCIm's submission of such order to the BellSouth Complex Resale Support Group; provided, however, that in the event BellSouth did not have reasonable notice that a particular central office was to have a splitter installed therein, the forty-two (42) day interval shall not apply. Collocation itself or an application for collocation will serve as reasonable notice

4.17.1.2 Once a splitter is installed on behalf of MCIm in a central office, MCIm shall be entitled to order the High Frequency Spectrum on lines served out of that central office.

4.17.1.3 BellSouth will bill and MCIm shall pay the appropriate manual or electronic OSS charges as set forth in Attachment 1 of this Agreement when MCIm orders High Frequency Spectrum for end-user service.

4.17.1.4 BellSouth will select, purchase, install, and maintain a central office POTS splitter and provide MCIm access to data ports on the splitter. At least 30 days before making a change in splitter suppliers, BellSouth will provide MCIm with a carrier notification letter informing MCIm of the change. MCIm shall purchase ports on the splitter as set forth more fully below.

4.17.1.5 BellSouth will install the splitter in (i) a common area close to the MCIm collocation area, if possible; or (ii) in a BellSouth relay rack as close to the MCIm DS0 termination point as possible. For purposes of this subsection, a common area is defined as an area in the central office in which both Parties have access to a

common test access point. BellSouth will cross-connect the splitter data ports to a specified MCIm DS0 at such time that a MCIm end user's service is established.

4.17.1.6 The High Frequency Spectrum shall only be available from BellSouth on loops on which BellSouth is also providing and continues to provide, analog voice service directly to the end user. In other circumstances, the High Frequency Spectrum may be available from another carrier in a line splitting arrangement.

4.17.1.7 In the event the end-user terminates its BellSouth provided voice service for any reason, and MCIm desires to continue providing xDSL service on such loop, MCIm shall be required to purchase a full stand-alone loop unbundled network element. In the event BellSouth disconnects the end-user's voice service pursuant to its tariffs or applicable law, and MCIm desires to continue providing xDSL service on such loop, MCIm shall be permitted to continue using the line by purchasing the full stand-alone loop unbundled network element. To the extent commercially practicable, BellSouth shall give MCIm notice in a reasonable time prior to disconnect, which notice shall give MCIm an adequate opportunity to notify BellSouth of its intent to purchase such loop. In those cases in which BellSouth no longer provides voice service to the end user and MCIm purchases the full stand-alone loop, MCIm may elect the type of loop it will purchase. MCIm will pay the appropriate recurring and non-recurring rates for such loop as set forth in Attachment 1 of this Agreement. In the event MCIm purchases a voice grade loop, MCIm acknowledges that such loop may not remain xDSL compatible.

4.17.1.8 Only one competitive local exchange carrier shall be permitted access to the High Frequency Spectrum of any particular loop.

4.17.2 To order High Frequency Spectrum on a particular loop, MCIm must have a Digital Subscriber Line Access Multiplexer ("DSLAM") collocated in the central office that serves the end-user of such loop, or in a remote terminal if the loop is provisioned via a digital loop carrier, in accordance with the provisions of Attachment 5. MCIm may order splitters in a central office once it has installed its DSLAM in that central office. BellSouth will install these splitters within the intervals provided in this Attachment.

4.17.3 BellSouth will devise a splitter order form that allows MCIm to order splitter ports in increments of 8 (when available), 24 or 96 ports.

4.17.3.1 BellSouth will provide MCIm the Local Service Request ("LSR") format to be used when ordering the High Frequency Spectrum.

4.17.4 BellSouth will provide access to the High Frequency Spectrum within the following target intervals: BellSouth will return a manual Firm Order Confirmation ("FOC") in no more than two (2) business days after receipt of a valid, error free manual LSR. When MCIm submits an electronic LSR for High Frequency Spectrum, BellSouth will return a FOC in four (4) hours ninety-five percent (95%) of the time, or for orders that do not flow-through, in two (2) business days. BellSouth will provide MCIm with access to the High Frequency Spectrum at the following target intervals:

4.17.4.1 For 1-5 lines at the same address within three (3) business days from BellSouth's issuance of a FOC; 6-10 lines at the same address within five (5) business days from BellSouth's issuance of a FOC; and more than 10 lines at the same address is to be negotiated.

4.17.4.2 BellSouth will provide to MCIm BellSouth's Loop Qualification System that BellSouth uses to qualify loops for its own ADSL offering as described below.

4.17.4. 3 BellSouth will provide MCIm access to the Preordering Loop Makeup (LMU), in accordance with Attachment 8 of this Agreement.

4.18 Maintenance and Repair - MCIm shall have access, for test, repair, and maintenance purposes, to any loop to which it has access to the High Frequency Spectrum. MCIm may access the loop at the point where the combined voice and data signal exits the central office splitter.

4.18.1 BellSouth will be responsible for repairing voice services and the physical line between the network interface device at the customer premise and the point of demarcation in the central office. MCIm will be responsible for repairing its data services. Each Party will be responsible for maintaining its own equipment.

4.18.2 MCIm shall inform its end users to direct data problems to MCIm, unless both voice and data services are impaired, in which event the end users should call BellSouth.

4.18.3 Once a Party has isolated a trouble to the other Party's portion of the loop, the Party isolating the trouble shall notify the end user that the trouble is on the other Party's portion of the loop.

4.18.4 If a trouble is reported on either Party's portion of the loop and no trouble actually exists, the Repairing Party may charge the Reporting Party for any dispatching and testing (both inside and outside the central office) required by the Repairing Party in order to confirm the loop's working status

4.18.5 In the event MCIm's deployment of xDSL on the High Frequency Spectrum significantly degrades the performance of other advanced services or of BellSouth's voice service on the same loop, BellSouth shall notify MCIm and allow twenty-four (24) hours to cure the trouble. If MCIm fails to resolve the trouble, BellSouth may discontinue MCIm's access to the High Frequency Spectrum on such loop.

4.19 Central Office IDLC for Access to Loops. Where deployed in BellSouth's network, BellSouth shall work cooperatively with MCIm to develop Technically Feasible methods and procedures to provide, at MCIm's request, shared GR303-equipped IDLC equipment in BellSouth's central offices for purposes of MCIm's access to unbundled Loops. Once these methods and procedures have been developed, BellSouth shall provide MCIm access to shared GR303-equipped IDLC equipment that is capable of:

4.19.1 performing electronic Cross Connection of the Loop to interoffice Transport (Dedicated or Shared) provided by either BellSouth, MCIm, or another Carrier;

4.19.2 concentrating Loops onto transport at concentration ratios specified by MCIm; and

4.19.3 multi-hosting among MCIm and other carriers or BellSouth.

4.20 Central Office Connections. As specified by MCIm, BellSouth shall provide all necessary or appropriate connections within its central offices or wire centers, at any applicable rates set forth in Attachment 1, including, but not limited to:

4.20.1 between the central office Demarcation Point of the Loop (e.g., distribution frame or its equivalent), and:

4.20.1.1 MCIm's collocation arrangement; or

4.20.1.2 Digital cross connect panels, range extenders, test points, and such other loop terminating equipment as the Parties may mutually agree upon; or

4.20.1.3 Other unbundled Network Elements; or

4.20.1.4 Third party collocation arrangement; and

4.20.2 Between digital cross connect panels, range extenders, test points, and such other loop terminating equipment as the Parties may mutually agree upon or other unbundled Network Elements and:

4.20.2.1 MCIm's collocation arrangement; or

4.20.2.2 digital cross connect panels, range extenders, test points, and such other loop terminating equipment as the Parties may mutually agree upon; or

4.20.2.3 other unbundled Network Elements; or

4.20.2.4 third party collocation arrangements.

4.21 Definition of Subloop**.** Any portion of the Loop that is Technically Feasible to access at terminals in BellSouth's outside plant, including inside wire owned by BellSouth. An accessible terminal is any point on the loop where technicians can access the wire or fiber within the cable without removing a splice case to reach the wire or fiber within. Such points may include, but are not limited to, the pole or pedestal, the Network Interface Device, the minimum point of entry, the single point of Interconnection, the main distribution frame, the Remote Terminal ("RT"), and the Feeder Distribution Interface ("FDI").

4.21.1 Loop Feeder

4.21.1.1 Definition.

4.21.1.1.1 The Loop Feeder provides connectivity between (1) an FDI associated with Loop Distribution and a termination point appropriate for the media in a Central Office, or (2) a Loop Concentrator/Multiplexer provided in a remote terminal and a termination point appropriate for the media in a Central Office. MCIm shall access the FDI by means of a tie cable provided by MCIm. Such tie cable shall be terminated on MCIm's feeder equipment by MCIm, and on a connector block in BellSouth's FDI by BellSouth. When MCIm orders Services that terminate on the FDI,

BellSouth shall connect such Services to MCIm's designated tie cable assignment on the BellSouth FDI end of the tie cable.

4.21.1.1.2 The physical medium of the Loop Feeder may be copper twisted pair, or single or multi-mode fiber or other technologies that BellSouth may deploy.

4.21.1.2 Requirements for Loop Feeder

4.21.1.2.1 The Loop Feeder shall be capable of transmitting analog voice frequency, basic rate ISDN, digital data, optical signals or analog radio frequency signals as appropriate for the Loop Feeder medium used.

4.21.1.2.2 BellSouth shall provide appropriate power for all active elements in the Loop Feeder. BellSouth will provide appropriate power from a central office source, or from a commercial AC source with rectifiers for AC to DC conversion and 8-hour battery backup when the equipment is located in an outside plant RT.

4.21.1.2.3 BellSouth shall identify technically feasible Demarcation Point(s) to the FDI that will allow MCIm to select where it accesses the FDI, and to provide the ability to connect MCIm's or a third Party's equipment or facilities to the FDI.

4.21.1.3 Additional Requirements - Special Copper Loop Feeder Medium. Where the Loop Feeder is existing copper twisted pair, MCIm may require BellSouth to provide copper twisted pair Loop Feeder which is unfettered by any intervening equipment (e.g., filters, loading coils, and range extenders), so that MCIm can use these Loop Feeders for a variety of services by attaching appropriate terminal equipment. BellSouth ULM will be used to perform these activities at the rates set forth in Attachment 1 of this Agreement. Where there is no existing copper twisted pair Loop Feeder, MCI may require BellSouth to provide copper twisted pair Loop Feeder which is unfettered by any intervening equipment (e.g., filters, loading coils, and range extenders), so that MCIm can use these Loop Feeders for a variety of services by attaching appropriate terminal equipment. BellSouth's special construction process will be used to determine costs.

4.21.1.4 Additional Technical Requirements - DS1 Conditioned Loop Feeder. Where available in BellSouth's network, MCIm may request Loop Feeder that will support a DS1 signal. If conditioning is required, then MCIm will use the ULM process at the rates set forth in Attachment 1 of this Agreement.

4.21.1.5 Additional Technical Requirements - Optical Loop Feeder. Where optical loop feeder is available in BellSouth's network at the location requested by MCIm, BellSouth shall make it available to MCIm.

4.21.1.6 The Loop Feeder will be terminated within a BellSouth central office as follows:

4.21.1.6.1 copper twisted pairs shall terminate on the MDF;

4.21.1.6.2 DS1 Loop Feeder shall terminate on a DSX1, DCS1/0 or DCS3/1; and

4.21.1.6.3 Fiber Optic cable shall terminate on a LGX.

4.21.2 Distribution

4.21.2.1 Definition

4.21.2.2 Requirements – Distribution. BellSouth shall provide MCIm with Distribution that satisfies the following requirements:

4.21.2.2.1 Distribution must be capable of carrying signals for the following services (as requested by MCIm):

4.21.2.2.1.1 Two-wire & four-wire analog voice grade Loops;

4.21.2.2.1.2 Two-wire & four-wire facilities that are capable of transmitting the digital signals needed to provide services such as ISDN, DSL and DS1-level signals.

4.21.2.2.2 Distribution must be capable of carrying all signaling messages or tones appropriate for the distribution medium used. Where the Distribution includes any active elements that terminate any of the signaling messages or

tones, these messages or tones must be reproduced by the Distribution at the interfaces to an adjacent Network Element in a format that maintains the integrity of the signaling messages or tones.

4.21.2.2.3 Distribution facilities shall support functions associated with provisioning, maintenance and testing of the unbundled sub-loop.

4.21.2.2.4 Where technically feasible, Distribution must support performance monitoring, provided by MCIm.

4.21.2.2.5 BellSouth shall offer, Distribution together with, and separately from, the NID component of Distribution.

4.21.2.3 Additional Requirements - Special Copper Distribution. In addition to Distribution that supports the requirements in subsection 4.6.2 above, MCIm may request Distribution to be copper twisted pair which are unfettered by any intervening equipment (e.g., filters, load coils, range extenders) so that MCIm can use the Distribution for a variety of services by attaching appropriate terminal equipment at the ends. For the removal of intervening equipment at MCIm's request, MCIm will use the ULM process at the rates set forth in Attachment 1.

4.21.2.4 Additional Requirements for Fiber Distribution. BellSouth will make available to MCIm at parity and on a nondiscriminatory basis fiber optic Distribution cable where the same is deployed in BellSouth's network.

4.21.2.5 Additional Requirements for Coaxial Cable. BellSouth will make available to MCIm at parity and on a nondiscriminatory basis coaxial Distribution cable (coax) where the same is deployed in BellSouth's network.

4.21.2.6 Interface Requirements. Distribution shall be equal to or better than each of the applicable interface requirements set forth in the technical references provided in Appendix 1.

4.22 Network Interface Device

4.22.1 Definition:

4.22.1.1 The Network Interface Device (NID) is a single-line termination device or that portion of a multiple-line termination

device required to terminate a single line or circuit. The function of the NID is to establish the network Demarcation Point between a carrier and its subscriber. The NID features two independent chambers or divisions which separate the service provider's network from the subscriber's inside wiring. Each chamber or division contains the appropriate connection points or posts to which the service provider, and the subscriber each make their connections.

4.22.2 With respect to multiple-line termination devices, if MCIm requests BellSouth to install the NID, MCIm shall specify the quantity of NID connections it requires within such device.

4.22.3 Figure 1 shows an example of one type of a NID.

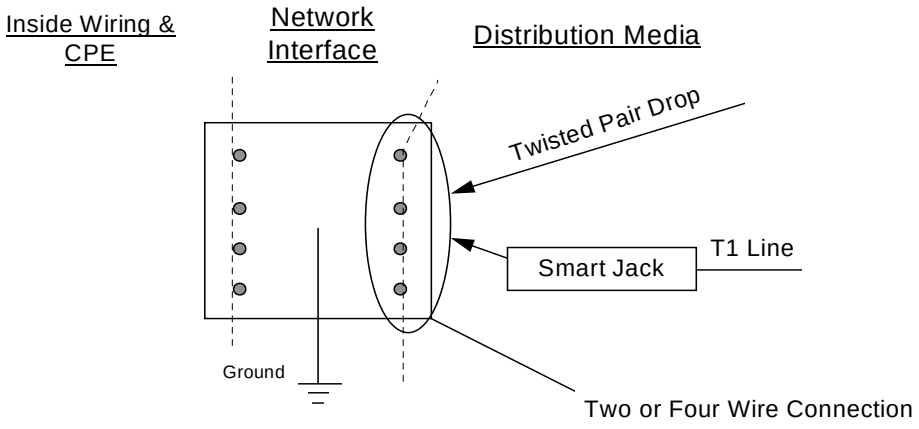

Figure 1 - Network Interface Device

4.22.4 Technical Requirements

4.22.4.1 The BellSouth Network Interface Device shall provide a clean, accessible point of connection for the inside wiring of MCIm's Distribution Media via MCIm's NID and shall maintain a connection to ground that meets the requirements set forth below.

4.22.4.2 The NID shall be capable of transferring electrical analog or digital signals between the subscriber's inside wiring for MCIm's Distribution Media via MCIm's NID.

4.22.4.3 All NID posts or connecting points shall be in place, secure, usable and free of any rust or corrosion. The protective

ground connection shall exist and be properly installed. The ground wire shall be free of rust or corrosion and have continuity relative to ground.

4.22.4.4 The NID shall be capable of withstanding all normal local environmental variations.

4.22.4.5 The NID shall be physically accessible to MCIm designated personnel. In cases where entrance to the subscriber premises is required to give access to the NID, MCIm shall obtain entrance permission directly from the subscriber.

4.22.4.6 BellSouth shall offer the NID together with, and separately from the Distribution Media component of Loop Distribution.

4.22.4.6.1 MCIm may connect its NID to the customer interface of BellSouth's NID.

4.22.5 Interface Requirements - Network Interface Device

4.22.5.1 Where deployed, the NID will be the interface to the End Users' premises wiring for all Loop technologies.

4.22.5.2 Responsibilities of The Parties for Conditions of Access And Attachment To NIDs. BellSouth shall allow MCIm to directly connect MCIm's Distribution Media to a BellSouth NID either by using excess capacity on the NID or, if no excess capacity exists, and where ordered by the Commission, direct connection would involve disconnecting BellSouth's Distribution Media and attaching MCIm's Distribution Media to the NID. Where MCIm disconnects BellSouth's Distribution Media, MCIm shall ground BellSouth's Distribution Media and maintain the ground in accordance with standard industry practices. In the event an MCIm customer reverts to BellSouth, BellSouth shall disconnect MCIm's Distribution Media only under these same terms and conditions. MCIm shall assume responsibility and shall bear the burden of properly grounding the loop after disconnection and maintaining same in proper order and safety. MCIm shall assume full liability for its actions and for any adverse consequences that could result. MCIm's responsibility and assumption of liability shall be the same for NIDs used in business settings which are similar to residential service NIDs, as for NIDs used for residential service.

4.23 Loop Concentrator

4.23.1 Definition. The Loop Concentrator is the Network Element that does one or more of the following:

(a) aggregates lower bit rate or bandwidth signals to higher bit rate or bandwidth signals (multiplexing);
(b) disaggregates higher bit rate or bandwidth signals to lower bit rate or bandwidth signals (demultiplexing);
(c) aggregates a specified number of signals or channels to fewer channels (concentrating);
(d) performs signal conversion, including encoding of signals (e.g., analog to digital and digital to analog signal conversion); or
(e) in some instances performs electrical to optical (E/O) conversion.

4.23.1.1 The Loop Concentrator function may be provided through a Digital Loop Carrier ("DLC") system, channel bank, multiplexer or other equipment at which traffic is encoded and decoded, multiplexed and demultiplexed, or concentrated.

4.23.2 Technical Requirements - Loop Concentrator. BellSouth shall provide MCIm with Loop Concentrators that satisfy the following requirements:

4.23.2.1 The Loop Concentrator must be capable of performing its functions on the signals for the following services, including, but not limited to, (as needed by MCIm to provide end-to-end service capability to its subscriber.):

4.23.2.1.1 two-wire & four-wire analog voice grade Loops;

4.23.2.1.2 two-wire & four-wire Loops that are capable of transmitting the digital signals needed to provide services such as ISDN, and DS1-level signals;

4.23.2.1.3 four-wire digital data (2.4Kbps through 64Kbps and n times 64Kbps (where n < 24);

4.23.2.1.4 DSL and DS3 rate, where available;

4.23.2.2 The Loop Concentrator must perform the following functions as appropriate:

4.23.2.2.1 Analog to digital signal conversion of both incoming and outgoing (upstream and downstream) analog signals;

4.23.2.2.2 Multiplexing of the individual digital signals up to higher transmission bit rate signals (e.g., DS0, DS1 and DS3 where available) for transport through the Loop Feeder facilities; and

4.23.2.2.3 Concentration of end-user signals onto fewer channels of a Loop Feeder (The concentration ratio to be specified by MCIm).

4.23.2.3 BellSouth shall provide power for the Loop Concentrator , through a non-interruptible source if the function is performed in a central office, or from a commercial AC power source with battery backup if the equipment is located outside a central office. Such power shall also adhere to the requirements stated herein.

4.23.2.4 The Loop Concentrator shall be provided to MCIm in accordance with the Technical References provided in Appendix 1.

4.23.3 Requirements - Loop Concentrator/ Multiplexer. BellSouth shall provide MCIm with Loop Concentrator/Multiplexers that satisfy the following requirements:

4.23.3.1 The Loop Concentrator/Multiplexer (C/M) must provide facility test functions, format conversion and signaling conversion as appropriate.

4.23.3.2 The underlying equipment that provides such C/M function must continuously monitor protected circuit packs and redundant common equipment.

4.23.3.3 The underlying equipment that provides such C/M function must automatically switch to a protection circuit pack on detection of a failure or degradation of normal operation.

4.23.3.4 The underlying equipment that provides such C/M function must be equipped with a redundant power supply or a battery back-up.

4.23.3.5 At MCIm's option, BellSouth shall provide MCIm with Real Time ability to initiate tests on the underlying device that provides such LC/M function utilizing integrated test equipment as well as other integrated functionality for routine testing and fault isolation.

4.23.4 Interface Requirements - Loop Concentrator. The Loop Concentrator shall meet the following interface requirements, as appropriate for the configuration that MCIm designates:

4.23.4.1 The Loop Concentrator shall provide an analog voice frequency copper twisted pair interface at the serving wire center, as described in the references in Appendix 1.

4.23.4.2 The Loop Concentrator shall provide digital 4-wire electrical interfaces at the serving wire center, as described in the references in Appendix 1.

4.23.4.3 Upon request from MCIm, BellSouth shall, in cooperation with MCIm, use its best efforts to operationalize access to an optical loop concentrator, and such concentrator shall provide optical SONET interfaces at rates of OC-3, OC-12, OC-48 and OC-N, where N is as described in the references in Appendix 1. The rates for optical loop concentrator shall be determined in accordance with Attachment 1 of this Agreement.

4.23.4.4 The Loop Concentrator shall provide the Bellcore TR-303 DS1 level interface at the serving wire center. The Loop Concentrator shall provide Bellcore TR-008 modes 1&2 DS1 interfaces when designated by MCIm. Such interface requirements are specified in the references in Appendix 1.

Section 5. Unbundled Network Element Combinations

5.1 Unbundled Network Elements combinations shall include Typical Combinations and Existing Combinations, including Enhanced Extended Links and other combinations as described in this Section 5.

5.2 Enhanced Extended Links (EELs)

5.2.1 Where facilities permit and where necessary to comply with an effective FCC and/or Commission order, or as otherwise mutually agreed by the Parties, BellSouth shall offer access to loop and transport combinations, also known as the Enhanced Extended Link ("EEL") as defined in subsection 5.2.2 below.

5.2.2 BellSouth will provide access to the EEL in the combinations set forth in subsection 5.3 following. This offering is intended to provide connectivity from an end user's location through that end user's serving wire center ("SWC") to MCIm's collocation space, or to MCIm's

designated MCIm network location within the LATA, where facilities exist, provided that the entire circuit meets the criteria described in subsections 5.4.1.1 through 5.4.1.3 below. When ordering EEL combinations, MCIm shall provide to BellSouth a letter certifying that MCIm will provide a significant amount of a local exchange service over the requested combination, as described in Section 5.4.1 below, and shall indicate under what local usage option MCIm seeks to qualify. MCIm shall be deemed to be providing a significant amount of local exchange service over the requested combination if one of the options listed in subsections 5.4.1.1 through 5.4.1.3 is met.

5.2.3 Upon MCIm's request, if MCIm's EEL combinations require multiplexing functionality, BellSouth shall provide multiplexing pursuant to this Agreement at the rates set forth in Attachment 1.

5.3 EEL Combinations

5.3.1 DS1 Interoffice Channel + DS1 Channelization + 2-wire VG Local Loop

5.3.2 DS1 Interoffice Channel + DS1 Channelization + 4-wire VG Local Loop

5.3.3 DS1 Interoffice Channel + DS1 Channelization + 2-wire ISDN Local Loop

5.3.4 DS1 Interoffice Channel + DS1 Channelization + 4-wire 56 kbps Local Loop

5.3.5 DS1 Interoffice Channel + DS1 Channelization + 4-wire 64 kbps Local Loop

5.3.6 DS1 Interoffice Channel + DS1 Local Loop

5.3.7 DS3 Interoffice Channel + DS3 Local Loop

5.3.8 STS-1 Interoffice Channel + STS-1 Local Loop

5.3.9 DS3 Interoffice Channel + DS3 Channelization + DS1 Local Loop

5.3.10 STS-1 Interoffice Channel + DS3 Channelization + DS1 Local Loop

5.3.11 2-wire VG Interoffice Channel + 2-wire VG Local Loop

5.3.12 4wire VG Interoffice Channel + 4-wire VG Local Loop

5.3.13 4-wire 56 kbps Interoffice Channel + 4-wire 56 kbps Local Loop

5.3.14 4-wire 64 kbps Interoffice Channel + 4-wire 64 kbps Local Loop

5.4 Special Access Service Conversions

5.4.1 MCIm may not convert special access services to combinations of loop and transport network elements, whether or not MCIm self-provides its entrance facilities (or obtains entrance facilities from a third party), unless MCIm uses the combination to provide a significant amount of local exchange service, in addition to exchange access service, to a particular customer. If MCIm does use special access services to provide a significant amount of local exchange service, MCIm may convert such special access services to EELs using an LSR, provided, however, in the event MCIm requests conversion of 15 or more circuits in any particular state, MCIm may use a spreadsheet rather than an LSR. To the extent MCIm requests to convert any special access services to combinations of loop and transport network elements at UNE prices, MCIm shall provide to BellSouth a letter certifying that MCIm is providing a significant amount of local exchange service (as described in this Section) over such combinations. The certification letter shall also indicate under what local usage option MCIm seeks to qualify for conversion of special access circuits. MCIm shall be deemed to be providing a significant amount of local exchange service over such combinations if one of the following options is met:

5.4.1.1 MCIm certifies that it is the exclusive provider of an end user's local exchange service. The loop-transport combinations must terminate at MCIm's collocation arrangement in at least one BellSouth central office. This option does not allow loop-transport combinations to be connected to BellSouth's tariffed services. Under this option, MCIm is the end user's only local service provider, and thus, is providing more than a significant amount of local exchange service. MCIm can then use the loop-transport combinations that serve the end user to carry any type of traffic, including using them to carry 100 percent interstate access traffic; or

5.4.1.2 MCIm certifies that it provides local exchange and exchange access service to the end user customer's premises and handles at least one third of the end user customer's local traffic measured as a percent of total end user customer local dialtone lines; and for DS1 circuits and above, at least 50 percent of the activated channels on the loop portion of the loop-transport combination have at least 5 percent local voice traffic individually, and the entire loop facility has at least 10 percent local voice traffic. When a loop-transport combination includes multiplexing, each of the individual DS1 circuits must meet these criteria. The

loop-transport combination must terminate at MCIm's collocation arrangement in at least one BellSouth central office. This option does not allow loop-transport combinations to be connected to BellSouth tariffed services; or

5.4.1.3 MCIm certifies that at least 50 percent of the activated channels on a circuit are used to provide originating and terminating local dialtone service and at least 50 percent of the traffic on each of these local dialtone channels is local voice traffic, and that the entire loop facility has at least 33 percent local voice traffic. When a loop-transport combination includes multiplexing, each of the individual DS1 circuits must meet this criteria. This option does not allow loop-transport combinations to be connected to BellSouth's tariffed services. Under this option, collocation is not required. MCIm does not need to provide a defined portion of the end user's local service, but the active channels on any loop-transport combination, and the entire facility, must carry the amount of local exchange traffic specified in this option.

5.4.1.4 In addition, there may be extraordinary circumstances where MCIm is providing a significant amount of local exchange service, but does not qualify under any of the three options set forth in subsection 5.4.1. In such case, MCIm may petition the FCC for a waiver of the local usage options set forth in the June 2, 2000 Order. If a waiver is granted, then upon MCIm's request the Parties shall amend this Agreement to the extent necessary to incorporate the terms of such waiver for such extraordinary circumstance.

5.4.1.5 BellSouth may at its sole discretion conduct a limited audit of MCIm records in order, to the extent reasonably necessary, to verify MCIm's compliance with the local usage requirements. The audit shall be conducted by a third party independent auditor and MCIm shall be given thirty days written notice of scheduled audit. Such audit shall occur no more than one time in a calendar year. Such audits shall not require active monitoring of customer lines on either the port or trunk side. If, based on its audits, BellSouth concludes that MCIm is not providing a significant amount of local exchange traffic over the combinations of loop and transport network elements, BellSouth may file a complaint with the appropriate Commission, pursuant to the dispute resolution process as set forth in the Interconnection Agreement.

5.4.1.6 MCIm may convert special access circuits to combinations of loop and transport UNEs pursuant to the terms of this Section and subject to the termination provisions in the applicable special

access tariffs, if any.

5.4.1.7 Rates

5.4.1.7.1 The non-recurring and recurring rates for the EEL Combinations of network elements set forth in 5.3, whether an Existing Combination or a Typical Combination, are as set forth in Attachment 1 to this Agreement.

5.4.1.7.2 On an interim basis, for combinations of loop and transport network facilities not set forth in Section 5.3, where the elements are either Existing Combinations or Typical Combinations, the non-recurring and recurring charges for such UNE combinations shall be the sum of the stand-alone non-recurring and recurring charges of the network elements which make up the combination. These interim rates shall be subject to true up based on the Commission's review of BellSouth's cost studies.

5.5 Multiplexing

5.5.1 Where multiplexing functionality is required in connection with loop and transport combinations, such multiplexing will be provided at the rates and on the terms set forth in this Agreement.

5.5.1.1 The non-recurring and recurring rates for the Other Network Element Combinations will be the sum of the recurring rates for the individual network elements plus a non recurring charge set forth in Attachment 1 this Agreement.

5.6 UNE/Special Access Combinations

5.6.1 Additionally, BellSouth shall make available to MCIm a combination of an unbundled loop, from the customer's premise to the customer's SWC, and tariffed special access interoffice facilities. To the extent MCIm will require multiplexing functionality in connection with such combination, BellSouth will provide access to multiplexing within the central office pursuant to the terms, conditions and rates set forth in its Access Services Tariffs. The tariffed special access interoffice facilities and any associated tariffed services, including but not limited to multiplexing, shall not be eligible for conversion to UNEs as described in Section 5.4.

5.6.2 The non-recurring and recurring rates for UNE/Special Access Combinations will be the unbundled loop rates as set forth in Attachment 1 of this Agreement. Charges associated with the interoffice transport

rates and multiplexing rates shall be charged separately under the Access Services Tariff.

5.7 Port/Loop Combinations

5.7.1 At MCIm's request, BellSouth shall provide access to combinations of port and loop network elements, as set forth in Section 5.7.5 below, that are Existing Combinations and Typical Combinations in BellSouth's network except as specified in subsections 5.7.2 and 5.7.3 below.

5.7.2 BellSouth shall not provide combinations of port and loop network elements on an unbundled basis in locations where, pursuant to Applicable Law, BellSouth is not required to provide circuit switching as an unbundled network element.

5.7.3 BellSouth shall not be required to provide circuit switching as an unbundled network element in density Zone 1, as defined in 47 CFR 69.123 as of January 1, 1999 of the Nashville, Tennessee MSA to MCIm if MCIm's customer has 4 or more DS0 equivalent lines ("Zone 1 Scenario").

5.7.4 Combinations of port and loop network elements provide local exchange service for the origination or termination of calls. BellSouth shall make available the following loop and port combinations at the terms and at the rates set forth below:

5.7.4.1 With the exception of the Zone 1 Scenario, BellSouth will provide to MCIm Existing Combinations and Typical Combinations of port and loop Network Elements on an unbundled basis. The rates for such combinations shall be as set forth in Attachment 1 of this Agreement.

5.7.4.2 In the Zone 1 Scenario, BellSouth shall provide to MCIm Existing Combinations and Typical Combinations of port and loop Network Elements. The rates for Existing Combinations are the market based rates as set forth in Attachment 1 of this Agreement. The rates for combinations that are Typical Combinations shall be negotiated by the Parties.

5.7.5 Combination Offerings

5.7.5.1 2-wire voice grade port, voice grade loop, unbundled end office switching, unbundled end office trunk port, common transport per mile per MOU, common transport facilities termination, tandem switching, and tandem trunk port.

5.7.5.2 2-wire voice grade DID port, voice grade loop, unbundled end office switching, unbundled end office trunk port, common transport per mile per MOU, common transport facilities termination, tandem switching, and tandem trunk port.

5.7.5.3 2-wire CENTREX port, voice grade loop, unbundled end office switching, unbundled end office trunk port, common transport per mile per MOU, common transport facilities termination, tandem switching, and tandem trunk port.

5.7.5.4 2-wire ISDN Basic Rate Interface, voice grade loop, unbundled end office switching, unbundled end office trunk port, common transport per mile per MOU, common transport facilities termination, tandem switching, and tandem trunk port.

5.7.5.5 2-wire ISDN Primary Rate Interface, DS1 loop, unbundled end office switching, unbundled end office trunk port, common transport per mile per MOU, common transport facilities termination, tandem switching, and tandem trunk port.

5.7.5.6 2-wire voice grade Coin port, voice grade loop, unbundled end office switching, unbundled end office trunk port, common transport per mile per MOU, common transport facilities termination, tandem switching, and tandem trunk port.

5.7.5.7 4 wire DS1 Trunk port, DS1 Loop, unbundled end office switching, unbundled end office trunk port, common transport per mile per MOU, common transport facilities termination, tandem switching, and tandem trunk port.

5.7.5.8 4-wire DS1 Loop with normal serving wire center channelization interface, 2-wire voice grade ports (PBX), 2-wire DID ports, unbundled end office switching, unbundled end office trunk port, common transport per mile per MOU, common transport facilities termination, tandem switching, and tandem trunk port.

5.8 Rates

5.8.1 The prices MCIm shall pay to BellSouth for Network Elements and other Services are set forth in Attachment 1. If MCIm purchases a service from a tariff, all terms and conditions, and rates as set forth in such tariff shall apply.

5.9 Other Network Element Combinations

5.8.1 In addition to the EEL Combinations described in subsection 5.2 above, and the Port/Loop Combinations described in subsection 5.7 above, in the state of Georgia, BellSouth shall make available to MCIm at UNE rates, in accordance with subsection 5.8.2 below: (1) Existing Combinations of Network Elements; and (2) Typical Combinations of Network Elements .

5.9.2 Rates for Other Network Element Combinations

5.9.2.1 On an interim basis, for Network Element combinations described in this subsection 5.9 where the elements are Existing Combinations or Typical Combinations, the non-recurring and recurring charges for such UNE combinations shall be the sum of the stand-alone non-recurring and recurring charges of the network elements which make up the combination. These interim rates shall be subject to true up based on the Commission's review of BellSouth's cost studies.

5.9.2.2 To the extent that MCIm seeks to obtain Existing Combinations or Typical Combinations of Network Elements described in this subsection 5.9 that have not been specifically priced by the Commission, MCIm, at its option, can request that such rates be determined pursuant to the BFR process set forth in this Agreement.

Section 6. Dark Fiber

6.1 Definition:

Dark Fiber is BellSouth optical transmission facilities without attached multiplexers, aggregation, or other electronics. To the extent BellSouth's fiber contains any lightwave repeaters (e.g., regenerators or optical amplifiers) installed on the fiber, BellSouth shall not remove the same.

6.2 Requirements

6.2.1 BellSouth shall make available Dark Fiber where it exists in BellSouth's network and where, as a result of future building or deployment, it becomes available. BellSouth shall offer all Dark Fiber to MCIm pursuant to the prices set forth in Attachment I of this Agreement.

BellSouth shall make available Dark Fiber at Parity and on a non-discriminatory basis in accordance with applicable FCC rules and orders.

6.2.2 BellSouth shall provide a single Point of Contact (SPOC) for negotiating all Dark Fiber arrangements.

6.2.3 MCIm may test the quality of the Dark Fiber to confirm its usability and performance specifications.

6.2.4 BellSouth shall use its best efforts to provide to MCIm information regarding the location, availability and performance of Dark Fiber within ten (10) business days for a records based answer and twenty (20) business days for a field based answer, after receiving a request from MCIm ("Request"). Within such time period, BellSouth shall send written confirmation of availability of the Dark Fiber ("Confirmation"). BellSouth shall hold such requested Dark Fiber for MCIm's use for ten (10) business days from MCIm's receipt of Confirmation and may not allow any other party to use such media, including BellSouth. BellSouth shall provide Dark Fiber on a first come, first served basis.

6.2.5 BellSouth shall use its best efforts to make Dark Fiber available to MCIm within thirty (30) business days after it receives written confirmation from MCIm that the Dark Fiber previously deemed available by BellSouth is wanted for use by MCIm. BellSouth shall identify all appropriate and available connection points (e.g., Light Guide Interconnection (LGX) or splice points) to enable MCIm to connect or splice MCIm provided transmission media (e.g., optical fiber) or equipment to the Dark Fiber, and MCIm shall notify BellSouth which point(s) it desires to use.

6.3 Additional Requirements for Dark Fiber

6.3.1 BellSouth shall provide MCIm with the most recent test records it has, if any, for Dark Fiber that MCIm plans to use. If BellSouth has no test records, at MCIm's request, BellSouth shall provide an estimate, using accepted industry practices, of the transmission loss of the channel at MCIm's intended transmission wavelength. BellSouth shall not warrant the accuracy of its estimate. If BellSouth's estimate of transmission loss exceeds MCIm's specifications, MCIm shall have the option of performing its own tests prior to purchase of the Dark Fiber.

6.3.2 MCIm may splice at the end points and test Dark Fiber obtained from BellSouth using MCIm or third party personnel. For connections at a splice point, BellSouth shall uncoil existing fiber a minimum of 25 feet from the manhole to allow MCIm to splice the fiber.

6.4 Availability of Unused Transmission Media other than Dark Fiber shall be determined by BellSouth on a case by case basis. BellSouth is not required to build out or deploy coaxial cable or copper where it has not been installed, although its availability will be affected as a result of future building out or deployment of such other unused transmission media.

6.4.1 If deployed in BellSouth's network, on a case by case basis, BellSouth may provide wave division multiplexer ("WDM")applications at rates to be negotiated by the Parties. For WDM applications, BellSouth shall provide to MCIm an interface to an existing WDM device or allow MCIm to install its own WDM device (where sufficient system loss margins exist or where MCIm provides the necessary loss compensation) to multiplex the traffic at different wavelengths. This applies to both the transmit and the receive ends of the Dark Fiber.

Section 7. Local Switching

7.1 General Requirements

7.1.1 Definition. Local Switching (also referred to as Local Circuit Switching as defined in FCC Rules) is the unbundled Network Element that gives MCIm the ability to use switching functionality in a BellSouth end office switch, including all vertical services and/or features that BellSouth's underlying switch is capable of providing, to the extent BellSouth offers such services and features in that switch. MCIm may request modifications to the switching functionality, including the vertical services and/or features available in a BellSouth end office switch, pursuant to the BFR process set forth in Part A of this Agreement. Local Switching will be provisioned with a Port Element, which provides line or trunk side access to Local Switching. Rates for line-side ports, trunk-side ports, and features, functions, and capabilities of the switch are set forth in Attachment 1 of this Agreement.

7.1.2 Port Element or Port means a 1) line card (or equivalent) and associated peripheral equipment on an end office switch which serves as the interconnection between individual loops or individual End User trunks, through the main distribution frame, and the switching components of an end office switch and the associated switching functionality in that end office switch, or 2) trunk card (or equivalent) and associated peripheral equipment on an end office switch which serves as the interconnection between interoffice transport and the switching components, through a trunk-side cross-connect panel, of an end office switch and the associated functionality in that end office switch. Each Port is typically associated with one (or more) telephone number(s) which serves as the Customer's network address.

7.1.3 Local Switching includes line side and trunk side facilities plus the features, functions, and capabilities of the switch. It consists of the line-side port (including connection between a Loop termination and a switch line card, telephone number assignment, one primary Directory Listing, pre-subscription, and access to 911, Operator Services, basic intercept, and Directory Assistance), line and line group features (including appropriate vertical features and line blocking options), usage (including the connection of lines to lines, lines to trunks, trunks to lines, and trunks to trunks), and trunk features (including the connection between the trunk termination and a trunk card).

7.1.4 Local Switching, including the ability to route, via selective call routing, to MCIm's or a third party's dedicated transport shall be unbundled from all other unbundled Network Elements.

7.1.4.1 Notwithstanding BellSouth's general duty to unbundle local circuit switching, BellSouth shall not be required to unbundle local circuit switching for MCIm in cases where MCIm serves end users with four or more voice grade (DS0) equivalents or lines, provided that BellSouth provides nondiscriminatory access to combinations of unbundled loops and transport (also known as the enhanced extended link ("EEL")) throughout Density Zone 1, and BellSouth's local circuit switches are located in:

1. The top 50 Metropolitan Statistical Areas as set forth in Appendix B of the Third Report and Order and Fourth Further Notice of Proposed Rulemaking in CC Docket No. 96-98, and

2. Density Zone I, as defined in 47 C.F.R. § 69.123, as of January 1, 1999.

7.2 Technical Requirements - Local Switching

Local Switching shall be at least equal to Local Switching requirements set forth in Appendix 1 of this Attachment.

7.2.1 BellSouth shall route calls to the appropriate trunk or lines for call origination or termination.

7.2.1.1 BellSouth shall route calls on a per line or per screening class basis to (1) BellSouth platforms providing Network Elements, (2) MCIm designated platforms, or (3) third-party platforms.

7.2.1.2 BellSouth shall provide standard recorded announcements for MCIm's selection, and call progress tones, to alert callers of call progress and disposition.

7.2.1.3 BellSouth shall change a subscriber from BellSouth's services to MCIm's services without loss of features, functionality, or dialing plan coverage, unless expressly agreed to otherwise by MCIm.

7.2.1.4 BellSouth shall perform routine testing (e.g., Mechanized Loop Tests (MLT) and test calls such as 105, 107 and 108 type calls) at Parity and on a nondiscriminatory basis.

7.2.1.5 BellSouth shall repair and restore any BellSouth equipment or any other BellSouth component that may adversely impact MCIm's use of unbundled Local Switching.

7.2.1.6 BellSouth shall control congestion points such as mass calling events, and network routing abnormalities, using capabilities such as Automatic Call Gapping, Automatic Congestion Control, and Network Routing Overflow. Application of such control will be competitively neutral and not favor any user of unbundled switching or BellSouth.

7.2.1.7 BellSouth shall perform manual call trace as designated by MCIm and permit subscriber originated call trace.

7.2.1.8 BellSouth shall record all billable events, involving usage of the element, and send the appropriate recording data to MCIm as outlined in Attachment 8.

7.2.1.9 For Local Switching at 911 Tandems, BellSouth shall allow interconnection from MCIm local switching elements and BellSouth shall route the calls to the appropriate Public Safety Access Point (PSAP).

7.2.1.10 Where BellSouth provides the following special services, it shall provide to MCIm:

7.2.1.10.1 Essential Service Lines, where BellSouth provides them to its own retail customers;

7.2.1.10.2 Telephone Service Prioritization ("TSP");

7.2.1.10.3 related services for the handicapped;

7.2.1.10.4 soft dial tone where required by law. Where BellSouth provides soft dial tone, it shall do so on a competitively-neutral basis, and

7.2.1.10.5 any other service required by law or regulation.

7.2.1.11 BellSouth shall provide Switching Service Point (SSP) capabilities and signaling software to interconnect the signaling links destined to the Signaling Transfer Point Switch (STPs). In the event that Local Switching is provided out of a switch without SS7 capability, the Tandem shall provide this capability as discussed in the Section on Tandem Switching. These capabilities shall adhere to the specifications set forth in Appendix 1 of this Attachment.

7.2.1.12 BellSouth shall provide interfaces to adjuncts through industry standards and Bellcore interfaces set forth in Appendix 1 of this Attachment.

7.2.1.13 Unbundled switching will include 911 access on the same basis as such access is provided in BellSouth's network.

7.2.1.14 BellSouth shall offer all Local Switching features that are technically feasible and provide feature offerings at parity to those provided by BellSouth to itself or any other party. Such feature offerings shall include but are not limited to:

7.2.1.14.1 Basic and Primary Rate ISDN;

7.2.1.14.2 Residential features;

7.2.1.14.3 Custom Local Area Signaling Services (CLASS/LASS);

7.2.1.14.4 Custom Calling Features;

7.2.1.14.5 Centrex or its equivalent (including equivalent administrative capabilities, such as subscriber accessible reconfiguration and detailed message recording); and

7.2.1.14.6 Advanced Intelligent Network ("AIN") triggers supporting MCIm, and BellSouth service applications, in BellSouth's SCPs. BellSouth shall offer to MCIm all AIN triggers currently available to BellSouth for offering AIN-based services in accordance with applicable technical

references in Appendix 1 of this Attachment. Currently, such triggers are:

7.2.1.14.6.1 Off-Hook Immediate;

7.2.1.14.6.2 Off-Hook Delay;

7.2.1.14.6.3 Termination Attempt;

7.2.1.14.6.4 3/6/10, and

7.2.1.14.6.5 Feature Code Dialing.

7.2.1.14.7 When the following triggers are supported by BellSouth, BellSouth shall make said triggers available to MCIm:

7.2.1.14.7.1 Private EAMF Trunk;

7.2.1.14.7.2 Shared Interoffice Trunk (EAMF, SS7);

7.2.1.14.7.3 N11;

7.2.1.14.7.4 Automatic Route Selection.

7.2.1.15 BellSouth shall assign each MCIm subscriber line the class of service designated by MCIm (e.g., using line class codes or other switch specific provisioning methods), and shall route directory assistance calls from MCIm Customers as directed by MCIm at MCIm's option. This includes each of the following call types:

7.2.1.15.1 O+/O- calls

7.2.1.15.2 411/DA calls

7.2.1.15.3 Any other selective routing that may be mutually agreed upon by the Parties and at rates negotiated by the Parties.

7.2.1.16 Subject to subsection 7.2.1.15, above, BellSouth shall assign each MCIm subscriber line the class of services designated by MCIm using line class codes and shall route operator calls from MCIm subscribers as directed by MCIm at MCIm's option. For example, BellSouth may translate 0- and 0+ intraLATA traffic, and

route the call through appropriate trunks to an MCIm Operator Services Position System (OSPS). Where an MCIm customer serviced via UNE-P makes a directory assistance or operator services call, BellSouth shall transmit the ANI-II digits to MCIm via Feature Group D signaling with customized routing. However, BellSouth shall not be required to convert Feature Group C signaling to Feature Group D signaling at the point of origination.

7.2.1.17 Where BellSouth provides switching, if an MCIm subscriber subscribes to MCIm provided voice mail and messaging services, BellSouth shall redirect incoming calls to the MCIm designated trunk group based upon pre-subscribed service arrangements (e.g., busy, don't answer, number of rings). In addition, MCIm may purchase a simplified message desk interface ("SMDI") service interface with multi-line hunting to the MCIm system, pursuant to Attachment 2 of this Agreement. BellSouth shall support the Inter-switch Voice Messaging Service (IVMS) capability, where available.

7.2.1.18 Local Switching shall be offered in accordance with the requirements of the technical references in Appendix 1 and their future releases.

7.3 Interface Requirements - Local Switching

7.3.1 BellSouth shall comply with the interface requirements for Local Circuit Switching as set forth in Appendix 1 of this Attachment.

7.3.2 In addition to the requirements referenced in Appendix 1 of this Attachment, BellSouth shall provide access to the following:

7.3.2.1 SS7 Signaling Network or Multi-Frequency trunking if requested by MCIm;

7.3.2.2 Interface to MCIm operator services systems or Operator Services or Directory Assistance Services through appropriate trunk interconnections using selective routing.

7.3.2.3 Interface to 950 access or other MCIm required access to interexchange carriers as requested.

7.3.3 Upon request of either Party, the Parties shall cooperatively test new OS/DA routing methods and, if the testing leads to the conclusion that the method is technically feasible, the Parties shall include language in the Agreement outlining how the service will be provisioned.

7.4 Interface to Loops

7.4.1 BellSouth shall provide the following interfaces to loops:

7.4.1.1 Standard Tip/Ring interface including loop-start or ground-start, on-hook signaling (e.g., for calling number, calling name and message waiting lamp);

7.4.1.1.2 Coin phone signaling;

7.4.1.1.3 Basic Rate Interface ISDN adhering to the standards set forth in Appendix 1 of this Attachment;

7.4.1.1.4 Two-wire analog interface to customer premise equipment to include reverse battery, E&M, and wink start ;

7.4.1.1.5 Four-wire DS1 interface to customer premise equipment or subscriber provided equipment (e.g., computers and voice response systems);

7.4.1.1.6 Primary Rate ISDN to PBX adhering to the standards set forth in Appendix 1 of this Attachment;

7.4.1.1.7 Switched Fractional DS1 with capabilities to configure Nx64 channels (where N = 1 to 24); and

7.4.1.1.8 DID signaling.

7.5 Integrated Services Digital Network (ISDN)

7.5.1 Integrated Services Digital Network (ISDN) is defined in two variations. The first variation is Basic Rate ISDN (BRI). BRI consists of 2 Bearer (B) Channels and one Data (D) Channel. The second variation is Primary Rate ISDN (PRI). PRI consists of 23 B Channels and one D Channel. Both BRI and PRI B Channels may be used for Circuit Switched Voice, Circuit Switched Data (CSD) or Packet Switched Data (PSD). The BRI D Channel may be used for call related signaling, non-call related signaling or packet switched data. The PRI D channel may be used for call related signaling.

7.5.2 Technical Requirements - ISDN

7.5.2.1 BellSouth shall offer ISDN switching that conforms to the requirements set forth in Appendix 1 of this Attachment, that, at a minimum:

7.5.2.1.1 Provides integrated Packet handling capabilities;

7.5.2.1.2 Allows for full 2B+D Channel functionality for BRI; and

7.5.2.1.3 Allows for full 23B+D Channel functionality for PRI.

7.5.2.1.4 Provides B Channels that are capable of carrying voice, 64 Kbps CSD, and PSD of 128 logical channels at minimum speeds of 19 Kbps throughput of each logical channel up to the total capacity of the B Channel.

7.5.2.1.5 Provides B Channels that are capable of carrying alternate voice and data on a per-call basis.

7.5.2.1.6 Provides BRI D Channels for call-associated signaling, non-call associated signaling and PSD of 16 logical channels at minimum speeds of 9.6 Kbps throughput of each logical channel up to the total capacity of the D channel.

7.5.2.1.7 Provides PRI D Channels that allow for call-associated signaling.

7.6 Requirements - Selective Routing

7.6.1 Subject to line class code availability, MCIm may request Selective Routing for all end offices where BellSouth provides switching services to MCIm.

7.6.2 BellSouth shall provide Selective Routing at MCIm's request for all MCIm Local Resale and Local Switching end user lines and for all applicable call types (i.e., 411, 555-1212, 0-, 0+local) in a requested end office.

7.6.3 Transport to carry the rerouted calls to MCIm's Operator Services platform(s) will be specified by MCIm. BellSouth-supplied Dedicated Transport is available for use with Selective Routing, where facilities are available, in which case rates and charges for such transport will apply in

addition to the rates and charges for Selective Routing. All such rates are set forth in Attachment 1 of this Agreement.

7.6.4 When MCIm's Operator Services traffic is routed to MCIm's platform or a third party platform via dedicated transport, upon MCIm's request, BellSouth shall overflow such traffic, to the extent technically feasible, over BellSouth's common (shared) transport from BellSouth's end office to an access tandem or other switch designated by BellSouth. MCIm will be required to provide dedicated trunks between BellSouth's access tandem or other switch and MCIm's or a third party's platform(s), and overflow on common (shared) transport from such access tandem to the platform will not be available. MCIm shall utilize the BFR process to determine the pricing and methods and procedures necessary to implement such routing.

7.6.5 The following is the Targeted Service Intervals for Selective Routing:

	Targeted Service Interval
1 to 20 Line Class Codes	30 days
21 to 40 Line Class Codes	60 days
More than 40Line Class Codes	Additional 30 days per additional 20 Line Class Codes

7.7 Packet Switching Capability

7.7.1 Packet Switching Capability is defined as the basic packet switching function of routing or forwarding packets, frames, cells or other data units based on address or other routing information contained in the packets, frames, cells or other data units, and the functions that are performed by Digital Subscriber Line Access Multiplexers (DSLAMs), including but not limited to:

(i) The ability to terminate copper customer loops (which includes both a low band voice channel and a high-band data channel, or solely a data channel);
(ii) The ability to forward the voice channels, if present, to a circuit switch or multiple circuit switches;
(iii) The ability to extract data units from the data channels on the loops; and
(iv) The ability to combine data units from multiple loops onto one or more trunks connecting to a packet switch or packet switches.

7.7.2 BellSouth shall be required to provide nondiscriminatory access to unbundled Packet Switching Capability only where each of the following conditions is satisfied:

(i) BellSouth has deployed digital loop carrier systems, including but not limited to, integrated digital loop carrier (IDLC) or universal digital loop carrier systems; or has deployed any other system in which fiber optic facilities replace copper facilities in the distribution Section (e.g., end office to remote terminal, pedestal or environmentally controlled vault);

(ii) There are no spare copper loops capable of supporting the xDSL services MCIm seeks to offer;

(iii) BellSouth has not permitted MCIm to deploy a DSLAM in the Remote Terminal, pedestal or environmentally controlled vault or other interconnection point, nor has MCIm obtained a virtual collocation arrangement at these subloop interconnection points; and

(iv) BellSouth has deployed packet switching capability for its own use.

Section 8. Operator Services

BellSouth shall provide MCIm access to operator service and directory assistance facilities where technically feasible, pursuant to Attachment 9.

Section 9. Shared Transport

9.1 Definition: "Shared Transport" is the transmission facilities shared by more than one carrier, including BellSouth, between end office switches, between end office switches and tandem switches, and between tandem switches in the BellSouth network. Where BellSouth Network Elements are connected by intra-office wiring, such wiring is provided as a part of the Network Elements and is not Shared Transport. Shared Transport consists of BellSouth inter-office transport facilities and is distinct and separate from Local Switching.

9.2 Shared transport will only be available where MCIm purchases Local Switching.

9.3 Technical Requirements - Shared Transport

9.3.1 BellSouth will be responsible for the engineering, provisioning, and maintenance of the underlying equipment and facilities that are used to provide Shared Transport.

Section 10. Dedicated Transport

10.1 Definition: Dedicated Transport is BellSouth transmission facilities, including all technically feasible capacity-related services including, but not limited to, DS1, DS3 and OCn levels, dedicated to a particular customer or carrier, that provides telecommunications between wire centers owned by BellSouth or requesting Telecommunications Carriers, or between switches owned by BellSouth or requesting Telecommunications Carriers. The end points of Dedicated Transport need not be wire centers or switch locations but shall be at a location where MCIm or a third party carrier has transmission facilities. If necessary, BellSouth shall modify its electronics whenever it provides dedicated transport to MCIm. Electronics are included in the cost of dedicated transport. BellSouth shall provide the electronics for dedicated transport if it currently exists in the network, but BellSouth is not required to construct facilities (including electronics) to provide dedicated transport where such facilities do not currently exist.

10.2 BellSouth shall offer, at the rates set forth in Attachment 1, Dedicated Transport in each of the following manners:

10.2.1 As capacity on a shared facility.

10.2.2 As a circuit (e.g., DS1, DS3, OC-n, STS-1) dedicated to MCIm; and,

10.2.3 As dedicated transport on an existing SONET ring. Such dedicated transport shall include all the features, functions, and capabilities of that existing SONET ring, to the extent technically feasible.

10.2.4 Nothing in subsections 10.2.1-10.2.3 shall be construed to require BellSouth to construct transport facilities where such a system does not presently exist, but BellSouth shall provide the electronics necessary to provide such dedicated transport to MCIm on existing facilities**.**

10.2.5 BellSouth shall not be required to construct the electronics on the fiber ring to give it SONET functionality if the functionality did not originally exist in the network**.**

10.3 When Dedicated Transport is provided as a circuit or as capacity on a shared facility, it shall include, at Parity and on a nondiscriminatory basis, (as appropriate):

10.3.1 Multiplexing functionality;

10.3.2 Grooming functionality; and,

10.3.3 Where available, redundant equipment and facilities necessary to support protection and restoration.

10.4 When Dedicated Transport is provided as a system, it shall include, at Parity and on a nondiscriminatory basis:

10.4.1 Transmission equipment such as multiplexers, line terminating equipment, amplifiers, and regenerators;

10.4.2 Inter-office transmission facilities such as optical fiber, Dark Fiber, copper twisted pair, and coaxial cable;

10.4.3 Where available, redundant equipment and facilities necessary to support protection and restoration; and,

10.4.4 Dedicated Transport includes the Digital Cross-Connect System (DCS) functionality as an option. DCS is described below in subsection 10.7.

10.5 Technical Requirements - Dedicated Transport

10.5.1 When BellSouth provides Dedicated Transport as a circuit or a system, the entire designated transmission circuit or system (e.g., DS1, DS3, STS-1) shall be dedicated to MCIm-designated traffic.

10.5.2 When requested by MCIm, Dedicated Transport shall provide physical diversity. Physical diversity means that two circuits are provisioned in such a way that, where available, no single failure of facilities or equipment will cause a failure on both circuits.

10.5.3 When physical diversity is requested by MCIm, BellSouth shall provide the maximum feasible physical separation between transmission paths for all facilities and equipment (unless otherwise agreed by MCIm).

10.5.4 Transmission rates shall be as specified by MCIm.

10.5.5 BellSouth shall offer the following interface transmission rates for Dedicated Transport:

10.5.5.1 DS1 (Extended SuperFrame - ESF/B8ZS, D4, and unframed applications shall be provided);

10.5.5.2 DS3 (C-bit Parity and unframed applications shall be provided);

10.5.5.3 Where dedicated transport is provided over SONET, BellSouth shall provide it at Parity.

10.5.6 If requested by MCIm, BellSouth shall provide cross-office wiring up to a suitable Point of Termination (POT) between Dedicated Transport and MCIm's designated equipment. BellSouth shall provide the following equipment for the physical POT:

10.5.6.1 DSX1 for DS1s or VT1.5s;

10.5.6.2 DSX3 for DS3s or STS-1s; and

10.5.6.3 LGX for optical signals (e.g., OC-3 and OC-12).

10.5.7 For Dedicated Transport provided by BellSouth, Bellsouth shall design the system (including but not limited to facility routing and termination points) as specified by MCIm.

10.5.8 Where technically feasible and where available, BellSouth shall provide electronic provisioning control for dedicated transport

10.5.9 BellSouth shall offer Dedicated Transport together with and separately from DCS.

10.6 Technical Requirements - Dedicated Transport Using SONET Technology.

10.6.1 BellSouth shall provide SONET standard interfaces in accordance with the standards in Appendix 1 of this Attachment.

10.6.2 At a minimum, Dedicated Transport shall meet each of the requirements set forth in the technical references provided in Appendix 1.

10.7 Digital Cross-Connect System (DCS)

10.7.1 Definition: Digital Cross-Connect System or "DCS" provides automated Cross Connection of Digital Signal level 0 (DS0) or higher transmission bit rate digital channels within physical interface facilities. Types of DCSs include but are not limited to DCS 1/0s, DCS 3/1s, and DCS 3/3s, where the nomenclature 1/0 denotes interfaces typically at the DS1 rate or greater with cross-connection typically at the DS0 rate. This same nomenclature, at the appropriate rate substitution, extends to the other types of DCSs specifically cited as 3/1 and 3/3. Types of DCSs that cross-connect Synchronous Transport Signal level 1 (STS-1s) or other BellSouth supported Synchronous Optical Network (SONET) signals are also DCSs, although not denoted by this same type of nomenclature.

DCS may provide the functionality of more than one of the aforementioned DCS types (e.g., DCS 3/3/1 which combines functionality of DCS 3/3 and DCS 3/1). For such DCSs, the requirements will be, at least, the aggregation of requirements on the "component" DCSs.

10.7.1.1 In locations where automated Cross Connection capability does not exist, DCS will be defined as the combination of the functionality provided by a Digital Signal Cross-Connect (DSX) or Light Guide Cross-Connect (LGX) patch panels and D4 channel banks or other DS0 and above multiplexing equipment used to provide the function of a manual Cross Connection.

10.7.1.2 Interconnection between a DSX or LGX to a switch, another cross-connect, or other service platform device, is included as part of DCS.

10.7.2 Technical Requirements - Digital Cross-Connect System

10.7.2.1 DCS shall provide completed end-to-end Cross Connection of the channels designated by MCIm.

10.7.2.2 DCS shall perform facility grooming, multipoint bridging, one-way broadcast, two-way broadcast, and facility test functions.

10.7.2.3 DCS shall provide multiplexing, format conversion, signaling conversion, or other functions.

10.7.2.4 The end-to-end Cross Connection assignment shall be input to the underlying device used to provide DCS from an operator at a terminal or via an intermediate system. The Cross Connection assignment shall remain in effect whether or not the circuit is in use.

10.7.2.5 BellSouth shall continue to administer and maintain DCS, including updates to the control software to current available releases.

10.7.2.6 BellSouth shall provide, at the rates set forth in Attachment 1, various types of Digital Cross-Connect Systems including:

10.7.2.6.1 DS0 cross-connects (typically termed DCS 1/0);

10.7.2.6.2 DS1/VT1.5 (Virtual Tributaries at the 1.5Mbps rate) cross-connects (typically termed DCS 3/1);

10.7.2.6.3 DS3 cross-connects (typically termed DCS 3/3);

10.7.2.6.4 STS-1 cross-connects; and

10.7.2.6.5 Other Technically Feasible cross-connects existing in the BellSouth network and designated by MCIm.

10.7.2.7 At MCIm's request, BellSouth shall provide, at the rates set forth in Attachment 1, an automated interface which allows MCIm the real time configuration and reconfiguration of the channels between the physical interfaces. Until such a request is made by MCIm, BellSouth shall process and implement reconfiguration Cross Connection requests on demand, at the rates set forth in Attachment 1.

10.7.2.8 BellSouth shall provide scheduled configuration and reconfiguration of the channels between the physical interfaces (i.e., BellSouth shall establish the processes to implement cross connects on a schedule mutually agreed to by the Parties.)

10.7.2.9 DCS shall continuously monitor protected circuit packs and redundant common equipment.

10.7.2.10 DCS shall automatically switch to a protection circuit pack on detection of a failure or degradation of normal operation.

10.7.2.11 The underlying equipment used to provide DCS shall be equipped with a redundant power supply or a battery back-up.

10.7.2.12 Where technically feasible, at MCIm's option, BellSouth shall provide MCIm with real time ability to initiate tests on integrated equipment used to test the signals and the underlying equipment used to provide DCS, as well as other integrated functionality for routine testing and fault isolation.

10.7.2.13 Where technically feasible, DCS shall provide SONET to asynchronous gateway functionality (e.g., STS-1 to DS1 or STS-1 to DS3).

10.7.2.14 Where technically feasible, DCS shall perform optical to electrical conversion where the underlying equipment used to provide DCS contains optical interfaces or terminations (e.g., Optical Carrier level 3, i.e., OC-3, interfaces on a DCS 3/1).

10.7.2.15 Where technically feasible, DCS shall have SONET ring terminal functionality where the underlying equipment used to provide DCS acts as a terminal on a SONET ring.

10.7.2.16 Where technically feasible, DCS shall provide multipoint bridging of multiple channels to other DCSs. MCIm may designate multipoint bridging to be one-way broadcast from a single master to multiple tributaries, or two-way broadcast between a single master and multiple tributaries.

10.7.2.17 Where technically feasible, DCS shall multiplex lower speed channels onto a higher speed interface and demultiplex higher speed channels onto lower speed interfaces as designated by MCIm.

10.7.3 Interface Requirements - Digital Cross-Connect System

10.7.3.1 BellSouth shall provide physical interfaces on DS0, DS1, and VT1.5 channel cross-connect devices at the DS1 rate or higher.

10.7.3.2 BellSouth shall provide physical interfaces on DS3 channel cross-connect devices at the DS3 rate or higher.

10.7.3.3 BellSouth shall provide physical interfaces on STS-1 cross-connect devices at the OC-3 rate or higher

10.8 DCS shall, at a minimum, meet all the requirements set forth in the technical references provided in Appendix 1.

Section 11. Signaling Link Transport

11.1 Definition: Signaling Link Transport is a set of two or four dedicated 56 Kbps (or higher when available) transmission paths between MCIm-designated Signaling Points of Interconnection (SPOI) that provides appropriate physical diversity and a cross connect at a BellSouth STP site.

11.2 Technical Requirements - Signaling Link Transport

11.2.1 Signaling Link Transport shall consist of full duplex mode 56 Kbps (or higher when available) transmission paths.

11.2.2 Of the various options available, Signaling Link Transport shall perform in the following two ways:

11.2.2.1 As an "A-link" which is a connection between a signaling end point and a home Signaling Transfer Point Switch (STPs) pair; and

11.2.2.2 As a "D-link" which is a connection between two STPs pairs in different company networks (e.g., between two STPs pairs for two Competitive Local Exchange Carriers (CLECs)).

11.2.3 Signaling Link Transport shall consist of two or more signaling link layers as follows:

11.2.3.1 An A-link layer shall consist of two links.

11.2.3.2 A D-link layer shall consist of four links.

11.2.4 A signaling link layer shall satisfy a performance objective such that:

11.2.4.1 There shall be no more than two minutes down time per year for an A-link layer; and

11.2.4.2 There shall be negligible (less than 2 seconds) down time per year for a D-link layer.

11.2.5 A signaling link layer shall satisfy interoffice and intraoffice diversity of facilities and equipment, such that:

11.2.5.1 No single failure of facilities or equipment causes the failure of both links in an A-link layer (i.e., the links should be provided on a minimum of two separate physical paths end-to-end); and

11.2.5.2 No two concurrent failures of facilities or equipment shall cause the failure of all four links in a D-link layer (i.e., the links should be provided on a minimum of three separate physical paths end-to-end).

11.3 Interface Requirements - Signaling Link Transport

11.3.1 There will be a DS1 (1.544 Mbps) interface at the MCIm-designated SPOIs. Each 56 Kbps transmission path will appear as a DS0 channel within the DS1 interface.

Section 12. Signaling Transfer Points (STPs)

12.1 Definition. Signaling Transfer Points (STPs) provide functionality that enable the exchange of SS7 messages among and between switching elements, database elements and signaling transfer points. Figure 4 depicts a typical SS7 interconnection arrangement.

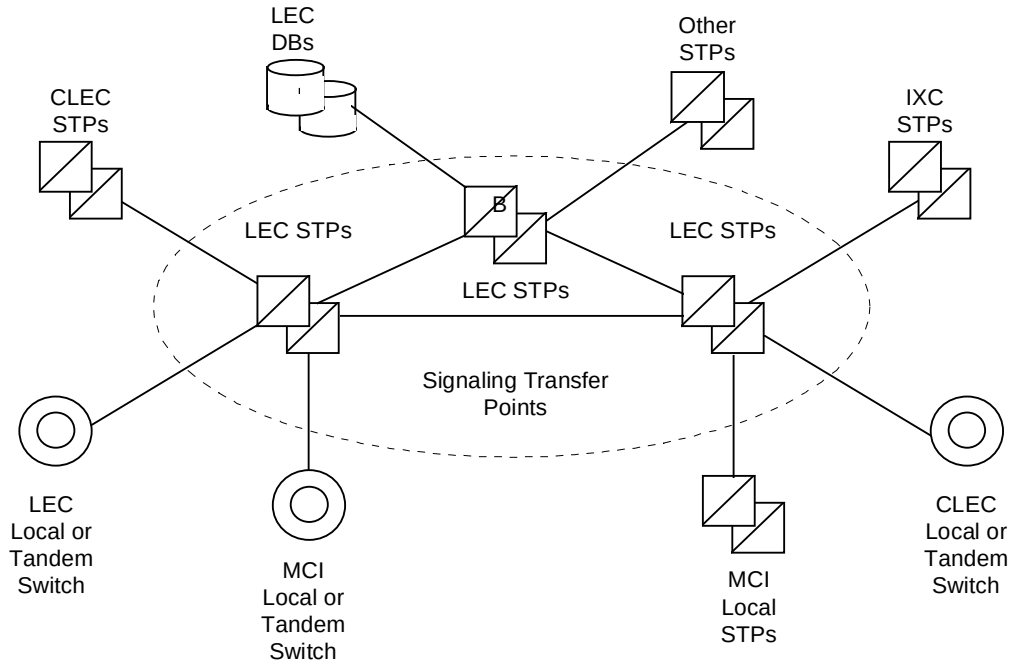

Figure 4

12.2 Technical Requirements - Signaling Transfer Points

12.2.1 STPs shall provide access to all other Network Elements connected to the BellSouth SS7 network. These include:

12.2.1.1 BellSouth Local Switching or Tandem Switching;

12.2.1.2 BellSouth Service Control Points/Data-Bases;

12.2.1.3 Third-party local or tandem switching systems; and

12.2.1.4 Third-party-provided STPs.

12.2.2 The connectivity provided by STPs shall fully support the functions of all other Network Elements connected to BellSouth's SS7 network. This explicitly includes the use of BellSouth's SS7 network to convey

messages which neither originate nor terminate at a signaling end point directly connected to the BellSouth SS7 network (i.e., transit messages). When the BellSouth SS7 network is used to convey transit messages, there shall be no alteration of the Integrated Services Digital Network User Part (ISDNUP) or Transaction Capabilities Application Part (TCAP) user data that constitutes the content of the message. BellSouth shall charge MCIm to transit these messages at the rates set forth in Attachment 1 of this Agreement.

12.2.2.1 Transit Signaling. MCIm may choose to route SS7 signaling information (e.g., ISUP, TCAP) from MCIm's signaling network to another LEC's or CMRS provider's signaling network via BellSouth's signaling network for the purpose of exchanging call processing/network information between MCIm and the other LEC's or CMRS provider's network, whether or not BellSouth has a trunk to the terminating switch, provided that, where BellSouth does not have such a trunk, MCIm furnishes BellSouth with:

12.2.2.1.1 the destination point codes ("DPCs") of all the LEC or CMRS provider switches to which it wishes to send transit signaling;

12.2.2.1.2 the identity of the STPs in BellSouth's network in which each DPC will be translated; and

12.2.2.1.3 the identity of the STPs in the other signaling network to which such transit signaling will be sent.

12.2.3 Before BellSouth transits TCAP messages to third parties, MCIm shall provide BellSouth with a letter of authorization from third party carriers to and from which BellSouth will transit TCAP messages. Such letter of authorization must state that the third party carrier will accept TCAP messages from BellSouth that originated on MCIm's network.

12.2.4 STPs shall provide all functions of the Message Transfer Part ("MTP") as specified in Appendix 1 of this Attachment.

12.2.5 STPs shall provide all functions of the SCP necessary for Class 0 (basic connectionless) service, as specified in Appendix 1.
In particular, this includes Global Title Translation (GTT) and SCP Management procedures as specified in Appendix 1.

12.2.6 In cases where the destination signaling point is a BellSouth local or tandem switching system or data base, or is an MCIm or third party local or tandem switching system directly connected to BellSouth's SS7

network, BellSouth STPs shall perform final GTT of messages to the destination and SCP Subsystem Management of the destination. In all other cases, STPs shall perform intermediate GTT of messages to a gateway pair of STPs in an SS7 network connected with the BellSouth SS7 network, and shall not perform SCP Subsystem Management of the destination.

12.2.7 BellSouth's STPs shall provide all functions of the OMAP commonly provided by STPs, as specified in Appendix 1 of this Attachment. When available and upon request, BellSouth shall identify the switches in which the following functionalities are available: MTP Routing Verification Test (MRVT) and, SCP Routing Verification Test (SRVT).

12.2.8 In cases where the destination signaling point is a BellSouth local or tandem switching system or DB, or is an MCIm or third party local or tandem switching system directly connected to the BellSouth SS7 network, STPs shall perform MRVT and SRVT to the destination signaling point. In all other cases, STPs shall perform MRVT and SRVT to a gateway pair of STPs in an SS7 network connected with the BellSouth SS7 network. This requirement shall be superseded by the specifications for Internetwork MRVT and SRVT if and when these become approved ANSI standards and available capabilities of BellSouth STPs, and when mutually agreed upon by MCIm and BellSouth.

12.2.9 STPs shall, at a minimum, comply with the performance requirements set forth in Appendix 1 of this Attachment.

12.2.10 BellSouth shall comply with BST Guidelines to Technical Publication GR-905-CORE (TR 73554).

12.3 Interface Requirements - Signaling Transport Points

12.3.1 BellSouth shall provide the following STPs options to connect MCIm or MCIm-designated local switching systems or STPs to the BellSouth SS7 network:

12.3.1.1 An A-link interface from MCIm local switching systems; and,

12.3.1.2 A D-link interface from MCIm's STPs.

12.3.2 Each type of interface shall be provided by one or more sets (layers) of signaling links, as follows:

12.3.2.1 An A-link layer shall consist of two links, as depicted in Figure 6.

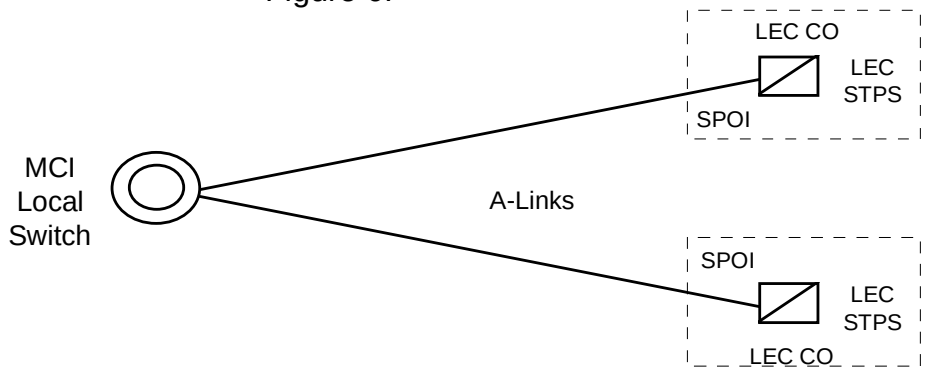

Figure 6. A-Link Interface

12.3.2.2 A D-link layer shall consist of four links, as depicted in Figure 7.

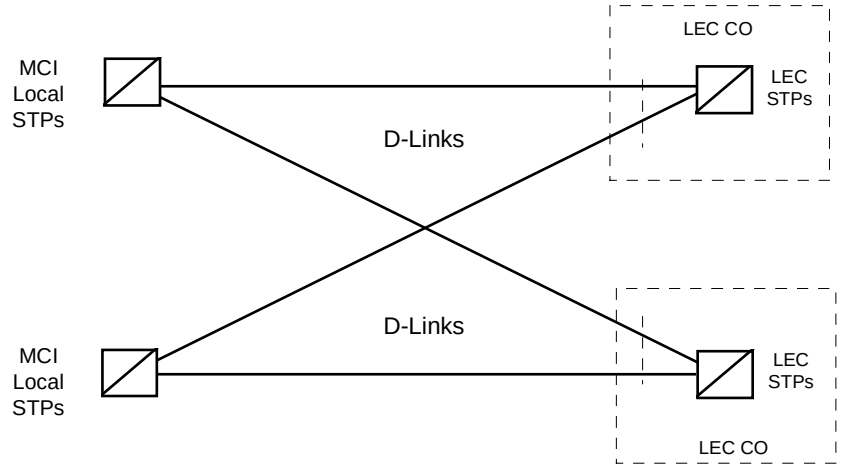

Figure 7

12.3.3 The Signaling point of Interconnection (SPOI) for each link shall be located at a cross-connect element, such as a DSX-1, in the Central Office (CO) where the BellSouth STPs are located. There shall be a DS1 or higher rate transport interface at each of the SPOIs. Each signaling link shall appear as a DS0 channel within the DS1 or higher rate interface. BellSouth shall offer higher rate DS1 signaling for interconnecting MCIm local switching systems or STPs with BellSouth STPs as soon as these become approved ANSI standards and available capabilities of BellSouth STPs. MCIm and BellSouth shall cooperate to establish mutually agreed upon SPOI's.

Section 13. Service Control Points/Databases

13.1 Definition:

13.1.1 Databases are the Network Elements that provide the functionality for storage of, access to, and manipulation of information required to offer a particular service and/or capability. Databases include, but are not limited to: the Calling Name Database, 911 Database, E911 Database, Line Information Database, Toll Free Calling Database, Advanced Intelligent Network Database, and downstream number portability databases.

13.1.2 A Service Control Point (SCP) is a specific type of database Network Element functionality deployed in a Signaling System 7 (SS7) based on Intelligent Network ("IN") that executes service application logic in response to SS7 queries sent to it by a switching system also connected to the SS7 network. SCPs also provide operational interfaces to allow for provisioning, administration and maintenance of subscriber data and service application data. (e.g., an 800 database stores subscriber record data that provides information necessary to route 800 calls).

13.2 Technical Requirements - SCPs/Databases

13.2.1 Requirements for SCPs/Databases within this Section address storage of information, access to information (e.g., signaling protocols and response times), and administration of information (e.g., provisioning, administration, and maintenance).

13.2.2 BellSouth shall provide physical interconnection to databases via industry standard interfaces and protocols (e.g., SS7 and X.25).

13.2.3 The reliability of interconnection options shall be consistent with requirements for diversity and survivability as required herein or otherwise set forth in Appendix 1.

13.2.4 Database functionality shall be unavailable no more that thirty (30) minutes per year.

13.2.5 BellSouth shall provide Database provisioning consistent with the provisioning requirements of this Agreement (e.g., data required, edits, acknowledgments, data format and transmission medium and notification of order completion).

13.2.6 The operational interface provided by BellSouth shall complete Database transactions (i.e., add, modify, delete) for MCIm subscriber records stored in BellSouth databases within an interval at parity with BellSouth's own provisioning schedule.

13.2.7 BellSouth shall provide Database maintenance consistent with the maintenance requirements as specified in this Agreement (e.g., notification of BellSouth Network Affecting Events, testing, dispatch schedule and measurement and exception reports).

13.2.8 BellSouth shall provide billing and recording information to track database usage consistent with connectivity billing and recording requirements as specified in this Agreement (e.g., recorded message format and content, timeliness of feed, data format and transmission medium).

13.2.9 BellSouth shall provide SCPs/Databases in accordance with the physical security requirements specified in this Agreement.

13.2.10 BellSouth shall provide SCPs/Databases in accordance with the logical security requirements specified in this Agreement.

13.3 Number Portability Database

13.3.1 Definition. The Number Portability (NP) database supplies routing numbers for calls involving numbers that have been ported from one local service provider to another.

13.3.2 At MCIm's option, BellSouth shall provide access to the BellSouth NP database, at the rates set forth in Attachment 1 of this Agreement, for MCIm switches to query and obtain the appropriate routing number on calls to ported numbers, or the industry specified indication that the number is not ported for non-ported numbers in NPA-NXXs that are opened to portability. The specified indication will also be provided when the NPA-NXX is not open to portability.

13.4 Line Information Database (LIDB)

This subsection 13.4 defines and sets forth additional requirements for the Line Information Database.

13.4.1 Definition: The Line Information Database (LIDB) is a transaction-oriented database accessible through SS7 networks. It contains records associated with subscriber Line Numbers and Special Billing Numbers. The LIDB will accept queries from MCIm through other Network Elements

or MCIm's network, and will provide appropriate responses. The query originator need not be the owner of LIDB data. LIDB queries include functions, such as screening billed numbers, that provide the ability to accept Collect or Third Number Billing calls and validation of Telephone Line Number based non-proprietary calling cards. The interface for the LIDB functionality is the interface between the BellSouth SS7 network and other SS7 networks. LIDB also interfaces with administrative systems. The administrative system interface provides Work Centers with an interface to LIDB for functions such as provisioning, auditing of data, access to LIDB measurements and reports.

13.4.2 Technical Requirements - Line Information Database

13.4.2.1 Prior to the availability of LNP, BellSouth shall enable MCIm to store in BellSouth's LIDB any subscriber Line Number or Special Billing Number record, (in accordance with the technical reference in Appendix 1) whether ported or not, for which the NPA-NXX or NXX-0/lXX Group is supported by that LIDB.

13.4.2.1.1 MCIm agrees that it will accept responsibility for telecommunications services billed by BellSouth for its billing and collection customers for MCIm's end user accounts which are resident in LIDB pursuant to this Agreement. MCIm authorizes BellSouth to place such charges on MCIm's bill from BellSouth and agrees that it shall pay such charges. Charges for which MCIm hereby takes responsibility include, but are not limited to, collect and third party number calls.

13.4.2.1.2 Charges for such services shall appear on a separate BellSouth bill page identified with the name of the entity for which BellSouth is billing the charge.

13.4.2.1.3 MCIm shall have the responsibility to render a billing statement to its end users for these charges, but MCIm's obligation to pay BellSouth for the charges billed shall be independent of whether MCIm is able or not to collect from MCIm's end users.

13.4.2.1.4 BellSouth shall not become involved in any disputes between MCIm and the entities for which BellSouth performs billing and collection. BellSouth will not issue adjustments for charges billed on behalf of an entity to MCIm. It shall be the responsibility of MCIm and the other

entity to negotiate and arrange for any appropriate adjustments.

13.4.2.2 Prior to the availability of LNP, BellSouth shall enable MCIm to store in BellSouth's LIDB any subscriber Line Number or Special Billing Number (in accordance with the technical reference in Appendix 1) record, whether ported or not, and NPA-NXX and NXX-0/lXX Group Records, belonging to an NPA-NXX or NXX-0/1 XX owned by MCIm.

13.4.2.3 Prior to the availability of LNP, BellSouth shall enable MCIm to store in BellSouth's LIDB any subscriber Line Number or Special Billing Number (in accordance with the technical reference in Appendix 1) record, whether ported or not, regardless of the number's NPA-NXX or NXX-0/lXX.

13.4.2.4 BellSouth shall perform the following LIDB functions for MCIm's Customer records in LIDB:

13.4.2.4.1 Billed Number Screening (provides information such as whether the Billed Number may accept Collect or Third Number Billing calls); and

13.4.2.4.2 Calling Card Validation.

13.4.2.5 BellSouth shall process MCIm's Customer records in LIDB on a basis that is at least at parity with BellSouth's process. BellSouth shall indicate to MCIm what additional functions (if any) are performed by LIDB in their network.

13.4.2.6 Within two (2) weeks after a request by MCIm, BellSouth shall provide MCIm with a list of the Customer data items which MCIm would have to provide in order to support each required LIDB function. The list shall indicate which data items are essential to LIDB function, and which are required only to support certain services. For each data item, the list shall show the data formats, the acceptable values of the data item and the meaning of those values.

13.4.2.7 BellSouth shall provide LIDB systems for which operating deficiencies that would result in calls being blocked, shall not exceed 30 minutes per year.

13.4.2.8 BellSouth shall provide LIDB systems for which operating deficiencies that would not result in calls being blocked shall not exceed 12 hours per year.

13.4.2.9 BellSouth shall provide LIDB systems for which the LIDB function shall be in overload (degraded performance in accordance with the technical reference in Appendix 1) no more than 12 hours per year. Such deficiency period is in addition to the periods specified in subsections 13.4.2.7 and 13.4.2.8 above.

13.4.2.10 When MCIm submits a service order, BellSouth's systems shall update, add, and delete information in BellSouth's LIDB automatically, as appropriate. When MCIm is facilities-based and elects to use BellSouth's LIDB, MCIm shall submit LIDB updates, additions, and deletions to BellSouth's DBAC (database administration center.)

13.4.2.11 Unless directed otherwise by MCIm, in the event that Customers change their local service provider, BellSouth shall maintain Customer data (for line numbers, card numbers, and for any other types of data maintained in LIDB) so that such Customers shall not experience any interruption of service due to the lack of such maintenance of Subscriber data. In the event that end user subscribers change their local service provider, BellSouth shall use its best efforts to avoid service interruption in those situations where BellSouth has control over additions and deletions in the database as LIDB provider.

13.4.2.12 All additions, updates and deletions of MCIm data to the LIDB shall be solely at the direction of MCIm, except where additions, updates or deletions are necessary to perform standard fraud control measures (such as calling card auto-deactivation).

13.4.2.13 BellSouth shall provide priority updates to LIDB for MCIm data at Parity upon MCIm's request (e.g., to support fraud protection).

13.4.2.14 BellSouth shall provide MCIm reports of all MCIm data in LIDB via data migration (FCIF), paper or fax.

13.4.2.15 Pursuant to BellSouth procedures, BellSouth shall provide LIDB systems such that no more than 0.01% of MCIm Customer records will be missing from LIDB, as measured by MCIm audits.

13.4.2.16 BellSouth shall perform backup and recovery of all of MCIm's data in LIDB including sending to LIDB all changes made since the date of the most recent backup copy at Parity.

13.4.2.17 BellSouth shall provide to MCIm access to LIDB measurements and reports at least at parity with the capability BellSouth has for its own Customer records, including electronic access when available within BellSouth, and that BellSouth provides to any other party.

13.4.2.18 BellSouth shall provide MCIm with LIDB reports of data that is missing or contain errors, as well as any misroute errors, within the time period reasonably negotiated between MCIm and BellSouth.

13.4.2.19 BellSouth shall prevent any access to or use of MCIm data in LIDB by BellSouth personnel or by any other party that is not authorized by MCIm in writing.

13.4.2.20 BellSouth shall accept queries to LIDB associated with MCIm Customer records, and shall return responses in accordance with the requirements specified herein or otherwise set forth in Appendix 1.

13.4.2.21 BellSouth shall provide mean processing time at the LIDB within 0.50 seconds under normal conditions as defined in the technical reference in Appendix 1.

13.4.2.22 BellSouth shall provide processing time at the LIDB within one (1) second for ninety-nine percent (99%) of all messages under normal conditions as defined in the technical reference in Appendix 1.

13.4.2.23 BellSouth shall provide LIDB performance that complies with the following standards:

13.4.2.23.1 There shall be at least a 99.9% reply rate to all query attempts.

13.4.2.23.2 Queries shall time out at LIDB no more than 0.1% of the time.

13.4.3 Interface Requirements - Line Information Database

13.4.3.1 The interface to LIDB shall comply with the requirements set forth in Appendix 1.

13.4.3.2 The CCS interface to LIDB shall be the standard interface, and shall comply with the requirements set forth in Appendix 1.

13.4.3.3 The LIDB Database interpretation of the ANSI-TCAP messages shall comply with the requirements set forth in Appendix 1. Global Title Translation shall be maintained in the signaling network in order to support signaling network routing to the LIDB.

13.5 Toll Free Calling Database

The Toll Free Calling Database is a SCP that provides functionality necessary for toll free (e.g., 800 and 888) number services by providing routing information and additional so-called vertical features during call set-up in response to queries from SSPs. BellSouth shall provide the Toll Free Calling Database in accordance with the following:

13.5.1 Technical Requirements - Toll Free Calling Database

13.5.1.1 BellSouth shall make the BellSouth Toll Free Calling Database available for MCIm to query, from MCIm's designated switch including BellSouth unbundled local switching, with a toll-free number and originating information.

13.5.1.2 The Toll Free Calling Database shall return carrier identification and, where applicable, the queried toll free number, translated numbers and instructions as it would in response to a query from a BellSouth switch.

13.5.1.3 The SCP also shall comply with the requirements set forth in Appendix 1 of this Attachment, which at a minimum include:

13.5.1.3.1 Network Management;

13.5.1.3.2 Subscriber Sample Collection; and

13.5.1.3.3 Service Maintenance.

13.5.2 Interface Requirements - Toll Free Calling Database

The signaling interface between the MCIm or other local switch and the Toll-Free Number database shall use the TCAP protocol together with the signaling network interface.

13.6 Advanced Intelligent Network (AIN) Access, Service Creation Environment and Service Management System (SCE/SMS) Advanced Intelligent Network Access. BellSouth's Service Creation Environment and Service Management System (SCE/SMS) Advanced Intelligent Network (AIN) Access shall provide MCIm the capability that will allow MCIm and other third parties to create service applications in a BellSouth Service Creation Environment and deploy those applications in a BellSouth SMS to a BellSouth SCP. The third party service applications interact with AIN triggers provisioned on a BellSouth SSP.

13.6.1 BellSouth will make all BellSouth SCP-based AIN retail services available for resale to MCIm. MCIm will be given the opportunity to develop competitive AIN 0.1 service applications via unbundled access to BellSouth's SCE/SMS. Where Technically Feasible, access to BellSouth resold services and MCIm-created services may be supported from both MCIm and BellSouth local switches.

13.6.2 SCE/SMS. AIN Access shall provide MCIm the ability to create service applications utilizing BellSouth AIN 0.1 service creation tools and deploy those applications via the BellSouth SMS to the BellSouth SCPs. Through traditional mechanisms, MCIm will be supported in provisioning switch triggers in BellSouth local switches which will access these applications. AIN SCE/SMS service development capabilities provided to MCIm will provide the same AIN 0.1 service development opportunities as presented to BellSouth in utilization of its basic AIN programmability tools (DesignEDGE service). See Figure 7 below.

13.6.2.1 BellSouth will participate in standards bodies actively pursuing SMS/SCE standards. If standards are adopted in this area, BellSouth will seek to evolve its AIN SMS/SCE access toward such standards.

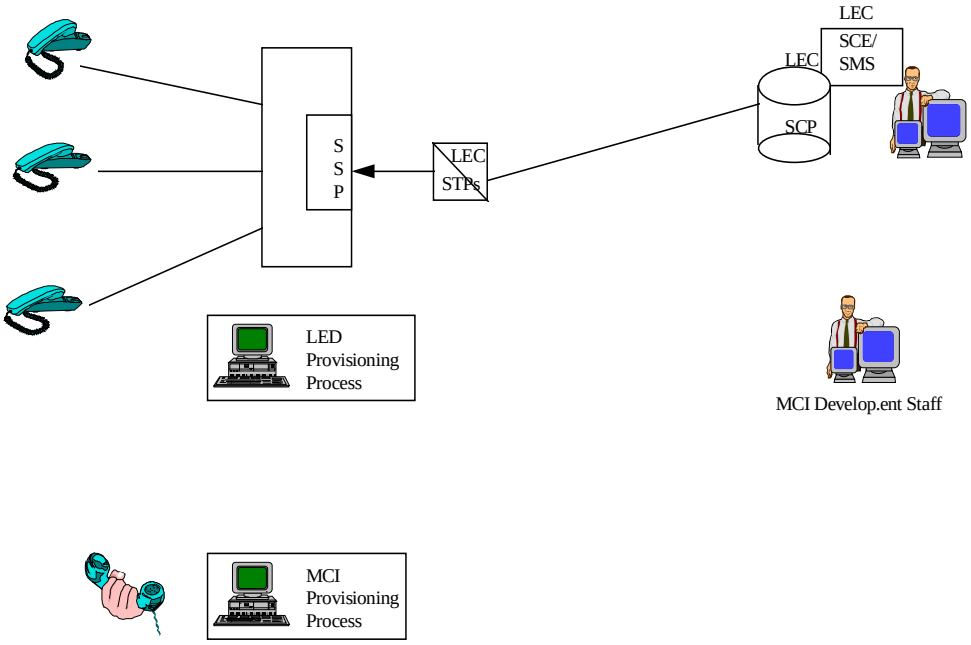

Figure 7

13.6.3 BellSouth's SCE/SMS offering shall provide access to SCE hardware, software, testing and technical support (e.g., help desk, system administrator) resources available to MCIm on a reasonable basis. Scheduling procedures shall provide MCIm equal priority access to these resources.

13.6.4 AIN access. BellSouth shall allow for multi-user access with proper source code management and other logical security functions as specified in the Security Section of this Agreement.

13.6.5 The BellSouth SCP shall partition and protect MCIm service logic and data from unauthorized access, execution or other types of compromise.

13.6.6 When MCI selects SCE/SMS AIN access, BellSouth shall provide adequate training, documentation, and technical support of MCIm development staff to reasonably expect successful application development. Such training shall address use of SCE/SMS AIN access and administrative functions, but will not include support for creation of a specific service application.

13.6.7 When MCIm selects SCE/SMS AIN Access, BellSouth shall provide for a secure, controlled access environment in association with its

internal use of AIN components. MCIm access will be provided via remote data connection (e.g., dial-in, ISDN).

13.6.8 When MCIm selects SCE/SMS AIN Access, BellSouth shall allow MCIm to download data forms and/or tables to the BellSouth SCP via the BellSouth SMS without intervention from BellSouth (e.g., service customization and subscriber subscription).

13.6.9 BellSouth shall offer, through the SCE/SMS AIN Access, access to the SCPs/Databases for control of MCIm end user functionality.

13.6.10 BellSouth's SCE/SMS AIN Access shall provide access to SCE hardware, software, testing and technical support (e.g., help desk, system administrator) resources available to MCIm. Scheduling procedures shall provide MCIm equivalent priority to these resources.

13.6.11 BellSouth SCP shall partition and protect MCIm service logic and data from unauthorized access, execution or other types of compromise.

13.6.12 When MCIm selects SCE/SMS AIN Access, BellSouth shall provide training, documentation, and technical support to enable MCIm to use BellSouth's SCE/SMS AIN Access to create and administer applications. Training, documentation, and technical support will address use of SCE and SMS access and administrative functions, but will not include support for the creation of a specific service application.

13.6.13 When MCIm selects SCE/SMS AIN Access, BellSouth shall allow MCIm to download data forms and/or tables to BellSouth SCP via BellSouth SMS without intervention from BellSouth (e.g., service customization and end user subscription).

13.7. Calling Name (CNAM) Database: The CNAM Database contains subscriber name and telephone number information used to show the calling party name of an incoming call on a display attached to the telephone of the terminating carrier's end user. Access to the CNAM database is available via two methods, as described below.

13.7.1 Calling Name (CNAM) Database Service, which accesses the CNAM database on a per query basis, shall be provided at the rates set forth in Attachment 1 to this Agreement. MCIm must provide to its account manager a written request with a requested activation date to activate this service. If MCIm is interested in requesting CNAM with volume and term pricing, MCIm must contact its account manager to request a separate CNAM volume and term Agreement.

13.7.2 In lieu of or in addition to the foregoing, upon MCIm's request, BellSouth shall provide to MCIm an electronic download of the CNAM Database for the state of Tennessee. Such download shall be provided via Connect:Direct, or upon mutual agreement, the Parties may elect to provide the download via another method of delivery. Such download shall be provided in accordance with the following:

13.7.2.1 Upon MCIm's written request, BellSouth shall develop a system through which BellSouth shall provide to MCIm a download of all the information described in this Section 13.7 for the state of Tennessee in BellSouth's Customer Name (CNAM) database. The downloaded information shall include only the information that would be accessible to MCIm on a per query basis.

13.7.2.1.1 The database download shall not include third party (e.g., ILEC, CLEC, and independent telephone company) subscriber records stored by BellSouth within its Customer Name (CNAM) database. BellSouth shall make a good faith effort to obtain permission from third party carriers to include their subscriber records stored within BellSouth's CNAM database. Unless a third party carrier specifically prohibits BellSouth from identifying that carrier, BellSouth shall identify to MCIm which third party carriers do not give such permission, so that MCIm can approach such third party carriers to obtain the data.

13.7.2.2 Within ten (10) business days of MCIm's request, BellSouth shall submit to MCIm an estimate of the nonrecurring charge for development of the download process and the recurring charge for maintenance of the database and, including costs for the screening of data not subject to the download pursuant to subsection 13.7.2.1.1, if any, for updated downloads, and such estimate shall be in accordance with the procedure in Attachment 1 for developing new prices. MCIm will respond to BellSouth within thirty (30) days after receipt of the charges from BellSouth as to whether MCIm accepts the estimated charges and wishes to receive a detailed price quote. If MCIm elects to receive a detailed price quote, it shall so notify BellSouth in writing and BellSouth, within an additional twenty (20) days, shall submit to MCIm a firm price quote for the download, in accordance with Attachment 1. If MCIm elects to proceed with the download, MCIm shall notify BellSouth of such intent and shall pay to BellSouth the nonrecurring charges for systems development. If negotiations of a firm price are incomplete, MCIm may accept BellSouth's firm price

quote as an interim rate, pursuant to subsection 1.4.1 of Attachment 1, and pay such interim rate, subject to retroactive true-up. Prior to transmission of the initial download, the Parties shall meet to establish appropriate business processes for downloads and updates of the data, including but not limited to initial download file size and anticipated update volume. If MCIm thereafter chooses to cancel its request for a download, BellSouth will return to MCIm that portion of the nonrecurring charges that BellSouth has not yet incurred as of the date of cancellation. BellSouth shall develop the system in accordance with a reasonable implementation schedule mutually agreed to by the Parties.

13.7.2.3 The initial download shall reflect all data that is current as of one business day prior to the provision date.

13.7.2.4 BellSouth shall update, at Parity, the CNAM Database Information via downloads of all database changes (i.e., additions, deletions, and modifications) to MCIm on each business day. Upon request of MCIm, BellSouth shall provide a complete database download to ensure data accuracy, at the rates negotiated by the Parties or at the interim rate subject to true-up. If a BellSouth update corrupts or otherwise degrades the integrity of the database, because of an error or omission of BellSouth, BellSouth shall provide a complete database download at no cost to MCIm.

13.7.2.5 Any download of information in the CNAM Database for Tennessee is provided to MCIm only for MCIm to provide telecommunications services MCIm shall not use the data for any other purpose, including but not limited to (1), disclosing such information to third parties or affiliates, except to provide a telecommunications service, or (2) marketing any service of MCIm or any third party. BellSouth shall have the right to audit MCIm's use of the data to determine compliance with this Subsection. Such audit shall be performed at BellSouth's expense by an independent auditor, shall be based on a good faith belief that MCIm is not complying with this subsection, and shall be in accordance with Generally Accepted Auditing Standards (GAAS). The independent auditor shall keep MCIm's network and operational information strictly confidential, and shall only release the final audit results to BellSouth.

Section 14. Tandem Switching

14.1 Definition. Tandem Switching is the function that establishes a communications path between two switching offices through a third switching office (the tandem switch).

14.2 Technical Requirements

14.2.1 Tandem Switching shall comply with the specifications set forth in Appendix 1 of this Attachment. Such specifications include, at a minimum, the following:

14.2.1.1 Tandem Switching shall provide signaling to establish a tandem connection;

14.2.1.2 Based on the line class codes established by MCIm at the BellSouth end office, Tandem Switching shall provide screening and routing as designated by MCIm;

14.2.1.3 Tandem Switching shall provide recording of all billable events designated by MCIm;

14.2.1.4 When Technically Feasible, and requested via BFR by MCIm, Tandem Switching shall provide Advanced Intelligent Network triggers supporting AIN features;

14.2.1.5 Left Blank Intentionally;

14.2.1.6 Tandem Switching shall provide access to Toll Free number portability database as designated by MCIm;

14.2.1.7 Tandem Switching shall provide all trunk interconnections discussed under the "Network Interconnection" Section (e.g., SS7, MF, DTMF, Dial Pulse, PRI-ISDN, DID, and CAMA-ANI (if appropriate for 911));

14.2.1.8 Tandem Switching shall provide connectivity to PSAPs where 911 solutions are deployed and the tandem is used for 911; and

14.2.1.9 Tandem Switching shall provide connectivity to transit traffic to and from other carriers.

14.2.2 Tandem Switching shall accept connections (including the necessary signaling and trunking interconnections) between end offices, other tandems, IECs, ICOs, CAPs and CLEC switches.

14.2.3 Tandem Switching shall provide local tandeming functionality between two end offices including two offices belonging to different CLECs (e.g., between an MCIm end office and the end office of another CLEC in accordance with Attachment 4 of this Agreement).

14.2.4 Tandem Switching shall preserve CLASS/LASS features and Caller ID as traffic is processed.

14.2.5 Tandem Switching shall record billable events and provide the billing information to MCIm in accordance with the requirements of Attachment 8 of this Agreement.

14.2.6 BellSouth shall perform, at Parity and on a nondiscriminatory basis, routine testing and fault isolation on the underlying switch that is providing Tandem Switching and all its interconnections. When requested by MCIm and where available, the results and reports of testing performed in response to a trouble report shall be made available to MCIm.

14.2.7 Tandem Switching shall be capable of controlling congestion using capabilities such as Automatic Congestion Control and Network Routing Overflow. Congestion control provided or imposed on MCIm traffic shall be at parity with controls being provided or imposed on BellSouth traffic (e.g., BellSouth shall not block MCIm traffic in a discriminatory manner).

14.2.8 Tandem Switching shall route calls to BellSouth or MCIm endpoints or platforms on a per call basis as designated by MCIm. Detailed primary and overflow routing plans for all interfaces available within the BellSouth switching network shall be mutually agreed to by MCIm and BellSouth. Such plans shall meet MCIm requirements for routing calls through the local network. Notwithstanding the provisions of subsection 14.3.4, Tandem Switching shall not be used to route OS or DA calls, either directly or on an overflow basis, unless MCIm has purchased selective routing from BellSouth.

14.2.9 Tandem Switching shall process originating toll-free traffic received from an MCIm local switch.

14.2.10 In support of AIN triggers and features, Tandem Switching, when Technically Feasible and requested via BFR by MCIm, shall provide SSP capabilities when these capabilities are not available from the Local Switching Network Element.

14.2.11 The Local Switching and Tandem Switching functions may be combined in an office. If this is done, both Local Switching and Tandem switching shall provide all of the functionality required of each of those Network Elements in this Agreement.

14.3 Interface Requirements - Tandem Switching

14.3.1 Tandem Switching shall provide interconnection to the E911 PSAP where the underlying Tandem is acting as the E911 Tandem.

14.3.2 Tandem Switching shall interconnect, with direct trunks, to all carriers with which BellSouth interconnects.

14.3.3 BellSouth shall provide all signaling necessary to provide Tandem Switching with no loss of feature functionality.

14.3.4 Tandem Switching shall provide an alternate final routing pattern for MCIm traffic overflowing from direct end office high usage trunk groups.

Section 15. Cooperative Testing

15.1 MCIm and BellSouth shall perform cooperative testing based on the requirements of Appendix 1 of this Attachment, and such testing shall be performed as set forth in Attachment 8 of this Agreement.

Section 16. Basic 911 and E911

16.1 See Attachment 9.

Section 17. Directory Assistance Data

17.1 See Attachment 9.

Appendix I
Attachment 3

1. Table of Technical References

Loop Concentrator/Multiplexer ("LC/M") Technical and Interface Requirements
Bellcore TR-NWT-000057, Functional Criteria for Digital Loop Carrier Systems, Issue 2, January 1993.
Bellcore TR-NWT-000393, Generic Requirements for ISDN Basic Access Digital Subscriber Lines.
ANSI T1.106 - 1988, American National Standard for Telecommunications - Digital Hierarchy - Optical Interface Specifications (Single Mode).
ANSI T1.105-1995, American National Standard for Telecommunications - Synchronous Optical Network (SONET) - Basic Description including Multiplex Structure, Rates and Formats.
ANSI T1.102-1993, American National Standard for Telecommunications - Digital Hierarchy - Electrical Interfaces.
ANSI T1.403-1989, American National Standard for Telecommunications - Carrier to Subscriber Installation, DS1 Metallic Interface Specification.
Bellcore GR-253-CORE, Synchronous Optical Network Systems (SONET), Common Generic Criteria.
LC/M and Intelligent LC/M Technical and Interface Requirements
Bellcore TR-TSY-000008, Digital Interface Between the SLC 96 Digital Loop Carrier System and a Local Digital Switch, Issue 2, August 1987.
Bellcore TR-NWT-000303, Integrated Digital Loop Carrier System Generic Requirements, Objectives and Interface, Issue 2, December 1992; Rev. 1, December 1993; Supplement 1, December 1993.
Bellcore TR-TSY-000673, Operations Systems Interface for an IDLC System, (LSSGR) FSD 20-02-2100, Issue 1, September 1989.
Bellcore Integrated Digital Loop Carrier System Generic Requirements, Objectives and Interface, GR-303-CORE, Issue 1, September 1995.
DS1 Conditioned and Optical Loop Feeder Technical Requirements
Bellcore Technical Requirement TR-NWT-000499, Issue 5, December 1993, section 7 for DS1 interfaces.
Bellcore TR-NWT-000057, Functional Criteria for Digital Loop Carrier Systems, Issue 2, January 1993.
Bellcore TR-NWT-000393, Generic Requirements for ISDN Basic Access Digital Subscriber Lines.
ANSI T1.106-1988, American National Standard for Telecommunications - Digital Hierarchy - Optical Interface Specifications (Single Mode).
ANSI T1.105-1995, American National Standard for Telecommunications - Synchronous Optical Network (SONET) - Basic Description including Multiplex Structure, Rates and Formats.
ANSI T1.102-1993, American National Standard for Telecommunications - Digital Hierarchy - Electrical Interfaces.
ANSI T1.403-1989, American National Standard for Telecommunications - Carrier to Subscriber Installation, DS1 Metallic Interface Specification.
Bellcore GR-253-CORE, Synchronous Optical Network Systems (SONET), Common Generic Criteria.

Loop Feeder **Interface Requirements**
Bellcore TR-TSY-000008, Digital Interface Between the SLC 96 Digital Loop Carrier System and a Local Digital Switch, Issue 2. August 1987.
Bellcore TR-NWT-000303, Integrated Digital Loop Carrier System Generic Requirements, Objectives and Interface, Issue 2, December 19921- Rev. 1, December 1993-1 Supplement 1, December 1993.
Bellcore Integrated Digital Loop Carrier System Generic Requirements, Objectives and Interface, GR-303-CORE, Issue 1, September 1995.
NID **Interface Requirements**
Bellcore Technical Advisory TA-TSY-000120 "Subscriber Premises or Network Ground Wire";
Bellcore Generic Requirement GR-49-CORE "Generic Requirements for Outdoor Telephone Network Interface Devices";
Bellcore Technical Requirement TR-NWT-00239 "Indoor Telephone Network Interfaces";
Bellcore Technical Requirement TR-NWT-000937 "Generic Requirements for Outdoor and Indoor Building Entrance"; and,
Bellcore Technical Requirement TR-NWT-0001 33 "Generic Requirements for Network Inside Wiring."
Distribution **Technical Requirements**
Bellcore TR-TSY-000057, "Functional Criteria for Digital Loop Carrier Systems", and,
Bellcore TR-NWT-000393, "Generic Requirements for ISDN Basic Access Digital Subscriber Lines."
T1.413-1995 Network and Customer Installation Interfaces - Asymmetric Digital Subscriber Line (ADSL) Metallic Interface Committee T1 - Telecommunications Technical Report No. 28, 1994, A Technical Report on High-Bit-Rate Digital Subscriber Lines (HDSL)
Distribution **Interface Requirements**
Bellcore TR-NWT-000049, "Generic Requirements for Outdoor Telephone Network Interface Devices," Issued December 1,1994;
Bellcore TR-NWT-000057, "Functional Criteria for Digital Loop Carrier Systems," Issued January 2, 1993;
Bellcore TR-NWT-000393, "Generic Requirements for ISDN Basic Access Digital Subscriber Lines";
Bellcore TR-NWT-000253, SONET Transport Systems: Common Criteria (A module of TSGR, FR-NWT-000440), Issue 2, December 1991;
Local Switching **Technical Requirements**
Bellcore (FR-NWT-000064) Local Switching Systems General Requirements
Bellcore TCAP (GR-1432-CORE), ISUP (GR-905-CORE), Call Management (GR-1429-CORE), Switched Fractional DS1 (GR-1357-CORE), Toll Free Service (GR-1428-CORE), Calling Name (GR-1597-CORE), Line Information Database (GR-954-CORE), Advanced Intelligent Network (GR-2863-CORE).
GR-1298-CORE, AIN Switching System Generic Requirements;
GR-1299-CORE, AIN Switch-Service Control Point (SCP)/Adjunct Interface Generic Requirements;
TR-NWT-001284, AIN 0.1 Switching System Generic Requirements;
SR-NWT-002247, AIN Release 1 Update.
Local Switching

Interface Requirements
Basic Rate Interface ISDN adhering to ANSI standards Q.931, Q.932 and appropriate Bellcore Technical Requirements;
Primary Rate ISDN to PBX adhering to ANSI standards Q.931, Q.932 and appropriate Bellcore Technical Requirements;
Loops adhering to Bellcore TR-NWT-08 and TR-NWT-303 specifications to interconnect Digital Loop Carriers.
Loop and Advance Services Requirements
ANSI T1.413 (ADSL)
ANSI T1.601 (BRI ISDN)
ANSI TR28 (HDSL)
ITU G991.1 (HDSL)
ITU G992.1 (ADSL)
ISDN Interface Requirements
TR-NWT-000393, January 1991, *Generic Requirements for ISDN Basic Access Digital Subscriber Lines.*
TR-NWT-303 specifications to interconnect Digital Loop Carriers.
PSD interfaces adhering to the X.25, X.75 and X.75' ANSI and Bellcore requirements.
Shared Transport and Dedicated Transport Technical Requirements
ANSI T1.101-1994, American National Standard for Telecommunications - Synchronization Interface Standard Performance and Availability;
ANSI T1.102-1993, American National Standard for Telecommunications - Digital Hierarchy - Electrical Interfaces;
ANSI T1.102.01-199x, American National Standard for Telecommunications - Digital Hierarchy - VT1.5;
ANSI T1.105-1995, American National Standard for Telecommunications - Synchronous Optical Network (SONET) - Basic Description including Multiplex Structure, Rates and Formats;
ANSI T1.105.01-1995, American National Standard for Telecommunications - Synchronous Optical Network (SONET) Automatic Protection Switching;
ANSI T1.105.02-1995, American National Standard for Telecommunications - Synchronous Optical Network (SONET) - Payload Mappings;
ANSI T1.105.03-1994, American National Standard for Telecommunications - Synchronous Optical Network (SONET) - Jitter at Network Interfaces;
ANSI T1.105.03a-1995, American National Standard for Telecommunications - Synchronous Optical Network (SONET)-Jitter at Network Interfaces - DS1 Supplement;
ANSI T1.105.05-1994, American National Standard for Telecommunications - Synchronous Optical Network (SONET) - Tandem Connection;
ANSI T1.105.06-199x, American National Standard for Telecommunications - Synchronous Optical Network (SONET) - Physical Layer Specifications;
ANSI T1.105.07-199x, American National Standard for Telecommunications - Synchronous Optical Network (SONET) - Sub STS-1 Interface Rates and Formats;
ANSI T1.105.09-199x, American National Standard for Telecommunications - Synchronous Optical Network (SONET) - Network Element Timing and Synchronization;
ANSI T1.106-1988, American National Standard for Telecommunications - Digital Hierarchy - Optical Interface Specifications (Single Mode);
ANSI T1.107-1995, American National Standard for Telecommunications - Digital Hierarchy - Formats Specifications;
ANSI T1.107a-1990 -American National Standard for Telecommunications - Digital Hierarchy - Supplement to Formats Specifications (DS3 Format Applications);
ANSI T1.107b-1991 -American National Standard for Telecommunications - Digital Hierarchy - Supplement to Formats Specifications;
ANSI T1.117-1991, American National Standard for Telecommunications - Digital Hierarchy - Optical Interface

Specifications (SONET) (Single Mode - Short Reach);
ANSI T1.403-1995, Carrier to Subscriber Installation, DS1 Metallic Interface Specification;
ANSI T1.404-1994, Network-to-Subscriber Installation - DS3 Metallic Interface Specification;
ANSI T1.404a, Network-to-Customer Installation - DS3 Metallic Interface Specification
IEC 825-1 Safety of Laser Products, Part 1: Equipment classification, requirements and user's guide, First Edition, 1999-11
IEC 825-2 Safety of Laser Products, Part 2: Safety of optical fiber communication systems, First Edition, 1993-09
ITU Recommendation G.707, Network node interface for the synchronous digital hierarchy (SDH);
ITU Recommendation G.704, Synchronous frame structures used at 1544, 6312, 2048, 8488 and 44736 kbit/s hierarchical levels;
Bellcore FR-440 and TR-NWT-000499, Transport Systems Generic Requirements (TSGR): Common Requirements;
Bellcore GR-820-CORE, Generic Transmission Surveillance: DS1 & DS3 Performance;
Bellcore GR-253-CORE, Synchronous Optical Network Systems (SONET); Common Generic Criteria;
Bellcore TR-NWT 000507, Transmission, Section 7, Issue 5 (Bellcore , December 1993). (A module of LSSGR, FR-NWT-000064.);
Bellcore TR-NWT-000776, Network Interface Description for ISDN Subscriber Access;
Bellcore TR-INS-000342, High-Capacity Digital Special Access Service-Transmission Parameter Limits and Interface Combinations, Issue 1 February 1991;
Bellcore ST-TEC-000052, Telecommunications Transmission Engineering Textbook, Volume 2: Facilities, Third Edition, Issue I May 1989;
Bellcore ST-TEC-000051, Telecommunications Transmission Engineering Textbook Volume 1: Principles, Third Edition. Issue 1 August 1987.
Dedicated Transport (including SONET Dedicated Transport) Technical and Interface Requirements
ANSI T1.105 and ANSI T1.105.07 and physical interfaces per ANSI T1.106.06 (including referenced interfaces
International Telecommunications Union (ITU) Recommendation G.707 and Plesiochronous Digital Hierarchy (PDH) rates per ITU Recommendation G.704.
ANSI T1.105.04-1995, American National Standard for Telecommunications - Synchronous Optical Network (SONET) - Data Communication Channel Protocols and Architectures;
ANSI T1.119-1994, American National Standard for Telecommunications - Synchronous Optical Network (SONET) - Operations, Administration, Maintenance, and Provisioning (OAM&P) Communications;
ANSI T1.119.01-1995, American National Standard for Telecommunications - Synchronous Optical Network (SONET) Operations, Administration, Maintenance, and Provisioning (OAM&P) Communications Protection Switching Fragment;
ANSI T1.119.02-199x, American National Standard for Telecommunications - Synchronous Optical Network (SONET) Operations, Administration, Maintenance, and Provisioning (OAM&P) Communications Performance Monitoring Fragment;
ANSI T1.231-1993 -American National Standard for Telecommunications - Digital Hierarchy - Layer 1 In-Service Digital Transmission Performance Monitoring.
Digital Cross-Connect System ("DCS") Technical Requirements
ANSI T1.102-1993, American National Standard for Telecommunications - Digital Hierarchy - Electrical Interfaces;
ANSI T1.102.01-199x, American National Standard for Telecommunications - Digital Hierarchy - VT1.5;
ANSI T1.105-1995, American National Standard for Telecommunications - Synchronous Optical Network (SONET) - Basic Description including Multiplex Structure, Rates and Formats;
ANSI T1.105.03-1994, American National Standard for Telecommunications - Synchronous Optical Network (SONET) - Jitter at Network Interfaces;
ANSI T1.105.03a-1995, American National Standard for Telecommunications - Synchronous Optical Network (SONET): Jitter at Network Interfaces - DS1 Supplement;
ANSI T1.105.06-199x, American National Standard for Telecommunications - Synchronous Optical Network

(SONET) - Physical Layer Specifications;
ANSI T1.106-1988, American National Standard for Telecommunications - Digital Hierarchy - Optical Interface Specifications (Single Mode);
ANSI T1.107-1988, American National Standard for Telecommunications - Digital Hierarchy - Formats Specifications;
ANSI T1.107a-1990, American National Standard for Telecommunications - Digital Hierarchy - Supplement to Formats Specifications (DS3 Format Applications);
ANSI T1.107b-1991, American National Standard for Telecommunications - Digital Hierarchy - Supplement to Formats Specifications;
ANSI T1.117-1991, American National Standard for Telecommunications - Digital Hierarchy - Optical Interface Specifications (SONET) (Single Mode - Short Reach);
ANSI T1.403-1989, Carrier to Subscriber Installation, DS1 Metallic Interface Specification:
ANSI T1.404-1994, Network-to-Subscriber Installation - DS3 Metallic Interface Specification;
ITU Recommendation G.707, Network node interface for the synchronous digital hierarchy (SDH);
ITU Recommendation G.704, Synchronous frame structures used at 1544, 6312, 2048, 8488 and 44736 kbit/s hierarchical levels;
FR-440 and TR-NWT-000499, Transport Systems Generic Requirements (TSGR): Common Requirements;
GR-820-CORE, Generic Transmission Surveillance: DS1 & DS3 Performance;
GR-253-CORE, Synchronous Optical Network Systems (SONET); Common Generic Criteria; and
TR-NWT-000776, Network Interface Description for ISDN Subscriber Access.
Signaling System 7 Technical Requirements
ANSI T1.11 – 1992 SS7 – General Information
ANSI T1.111 – 1996 SS7 - Message Transfer Part (MIP)
ANSI T1.112 – 1996 SS7 - Signaling Connection Control Part (SCCP)
ANSI T1.113 – 1996 SS7 - ISDN User Part (ISUP)
ANSI T1.114 – 1996 SS7 - Transaction Capability Application Part (TCAP)
ANSI T1.116 –1196 SS7 – Operation, Maintenance, and Administration Part
ANSI T1 (Draft) SS7 – Intermediate Network Selection (INS) Capability
ANSI T1 (Draft) SS7 – Local Service Provider Identification
STPs MTP and SCCP Performance Requirements
ANSI T1.111.6 MTP Performance
ANSI T1.112.5. SCCP Performance
STPs MTP and SCCP Interface Requirements
Bellcore GR-905-CORE, Common Channel Signaling Network Interface Specification (CCSNIS) Supporting Network Interconnection, Message Transfer Part (MTP), and Integrated Services Digital Network User Part (ISDNUP); and
Bellcore GR-1432-CORE, CCS Network Interface Specification (CCSNIS) Supporting Signaling Connection Control Part (SCCP) and Transaction Capabilities Application Part (TCAP).
STPs Additional Technical Requirements
ANSI T1.111-1992 American National Standard for Telecommunications - Signaling System Number 7 (SS7) - Message Transfer Part (MTP);
ANSI T1.111A-1994 American National Standard for Telecommunications - Signaling System Number 7 (SS7) - Message Transfer Part (MTP) Supplement;
ANSI T1.112-1992 American National, Standard for Telecommunications - Signaling System Number 7 (SS7) - Signaling Connection Control Part (SCCP);
ANSI T1.115-1990 American National Standard for Telecommunications - Signaling System Number 7 (SS7) - Monitoring and Measurements for Networks;

ANSI T1.116-1990 American National Standard for Telecommunications - Signaling System Number 7 (SS7) - Operations, Maintenance and Administration Part (OMAP);
ANSI T1.118-1992 American National Standard for Telecommunications - Signaling System Number 7 (SS7) - Intermediate Signaling Network Identification (ISNI);
Bellcore GR-905-CORE, Common Channel Signaling Network Interface Specification (CCSNIS) Supporting Network Interconnection, Message Transfer Part (MTP), and Integrated Services Digital Network User Part (ISDNUP); and
Bellcore GR-1432-CORE, CCS Network Interface Specification (CCSNIS) Supporting Signaling Connection Control Part (SCCP) and Transaction Capabilities Application Part (TCAP).
Number Portability Database Interface Requirements
Technical Requirements for Number Portability – Switching Systems
Technical Requirements for Number Portability – Database and Global Title Translation
Toll Free Number Database Technical Requirements
SR-TSV-002275 (BOC Notes on the (ILEC) Networks, SR-TSV-002275, Issue 2, (Bellcore , April 1994))
SCPs/Databases Technical Requirements
GR-246-CORE, Bell Communications Research Specification of Signaling System Number 7, ISSUE 1 (Bellcore , December 199);
GR-1432-CORE, CCS Network Interface Specification (CCSNIS) Supporting Signaling Connection Control Part (SCCP) and Transaction Capabilities Application Part (TCAP). (Bellcore , March 1994);
GR-954-CORE, CCS Network Interface Specification (CCSNIS) Supporting Line Information Database (LIDB) Service 6, Issue 1, Rev. 1 (Bellcore , October 1995);
GR-1149-CORE, OSSGR Section 10: System Interfaces, Issue 1 (Bellcore , October 1995) (Replaces TR-NWT-001149);
GR-1158-CORE, OSSGR Section 22.3: Line Information Database 6, Issue (Bellcore , October 1995);
GR-1428-CORE, CCS Network Interface Specification (CCSNIS) Supporting Toll Free Service (Bellcore , May 1995); and
"Bellcore Special Report SR-TSV-002275, IBOC Notes on the LEC Networks - Signaling".
SCE/SMS AIN Access
GR-1280-CORE, AIN Service Control Point (SCP) Generic Requirements.
Tandem Switching Technical & Interface Requirements
Bell Communications Research TR-TSY-000540 Issue 2R2, Tandem Supplement, 6/l/90;
GR-905-CORE covering CCSNIS;
GR-1429-CORE for call management features; and GR-2863-CORE and GR-2902-CORE covering CCS AIN interconnection.
Network Elements and Ancillary Functions Additional Performance Requirements: Bell Documents
FR-64, *LATA Switching Systems Generic Requirements (LSSGR).*
TR-NWT-000499, Issue 5, Rev 1, April 1992, *Transport Systems Generic Requirements (TSGR): Common Requirements.*
TR-NWT-000418, Issue 2, December 1992, *Generic Reliability Assurance Requirements For Fiber Optic Transport Systems.*
TR-NWT-000057, Issue 2, January 1993, *Functional Criteria for Digital Loop Carriers Systems.*
TR-NWT-000507, Issue 5, December 1993, *LSSGR - Transmission, Section 7.*
GR-303-CORE, Issue 1, September 1995, *Integrated Digital Loop Carrier System Generic Requirements, Objectives, and Interface.*

GR-334-CORE, Issue 1, June 1994, *Switched Access Service: Transmission Parameter Limits and Interface Combinations.*
TR-NWT-000335, Issue 3, May 1993, *Voice Grade Special Access Services - Transmission Parameter Limits and Interface Combinations.*
TR-TSY-000529, Issue 2, July 1987, *Public Safety - LSSGR.*
GR-1158-CORE, Issue 2, October 1995, *OSSGR Section 22.3: Line Information Database.*
TR-TSY-000511, Issue 2, July 1987, *Service Standards, a Module (Section 11) of LATA Switching Systems Generic Requirements (LSSGR, FR-NWT-000064).*
TR-NWT-000393, January 1991, *Generic Requirements for ISDN Basic Access Digital Subscriber Lines.*
TR-NWT-000909, December 1991, *Generic Requirements and Objectives for Fiber In The Loop Systems.*
TR-NWT-000505, Issue 3, May 1991, *LSSGR Section 5, Call Processing.*
FR-NWT-000271, 1993, *Operator Services Systems Generic Requirements (OSSGR).*
TR-NWT-001156, Issue 2, July 1993, *OSSGR Operator Services Systems Generic Requirements, Section 21, Operator Subsystem.*
SR-TSY-001 171, Issue 1, January 1989, *Methods and Procedures for System Reliability Analysis.*
Bellcore *Telecommunications Transmission Engineering*, 3rd Ed, 1990.
Network Elements and Ancillary Functions Additional Performance Requirements: ANSI Standards
ANSI T1.512-1994, Network Performance - Point-to-Point Voice-Grade Special Access Network Voiceband Data Transmission Objectives.
ANSI T1.506-1990, Network Performance - Transmission Specifications for Switched Exchange Access Network.
ANSI T1.508-1992, Telecommunications - Network Performance - Loss Plan for Evolving Digital Networks. Also supplement T1.508a-1993.
ANSI T1.101-1994, Digital Synchronization Network Plan.
Network Elements and Ancillary Functions Additional Performance Requirements: TIA/EIA Standards
TIA/EIA TSB-37A, Telephone Network Transmission Model for Evaluating Modem Performance.
TIA/EIA TSB-38, Test Procedure for Evaluation of 2-wire 4 kHz Voiceband Duplex Modems.
Network Elements and Ancillary Functions Additional Performance Requirements: IEEE Standards
IEEE Standard 743-1984, IEEE Standard Methods and Equipment for Measuring Transmission Characteristics of Analog Voice Frequency Circuits.
ANSI /IEEE Standard 820-1984, Telephone Loop Performance Characteristics.
SS7 Network Interconnection Interface Requirements
Bellcore GR-905-CORE, Common Channel Signaling Network Interface Specification (CCSNIS) Supporting Network Interconnection, Message Transfer Part (MTP), and Integrated Services Digital network User Part (ISDNUP);
Bellcore GR-1428-CORE, CCS Network Interface Specification (CCSNIS) Supporting Toll Free Service;
Bellcore GR-1429-CORE, CCS Network Interface Specification (CCSNIS) Supporting Call Management Services; and
Bellcore GR-1432-CORE, CCS Network Interface Specification (CCSNIS) Supporting Signaling Connection Control Part (SCCP) and Transaction Capabilities Application Part (TCAP).
SS7 Network Interconnection Additional Requirements
ANSI T1.110-1992 American National Standard Telecommunications Signaling System Number 7 (SS7) - General Information;
ANSI T1.111-1992 American National Standard for Telecommunications - Signaling System Number 7 (SS7) - Message Transfer Part (MTP);
ANSI T1.111A-1994 American National Standard for Telecommunications - Signaling System Number 7 (SS7) - Message Transfer Part (MTP) Supplement;

ANSI T1.112-1992 American National Standard for Telecommunications - Signaling System Number 7 (SS7) - Signaling Connection Control Part (SCCP);
ANSI T1.113-1995 American National Standard for Telecommunications - Signaling System Number 7 (SS7) - Integrated Services Digital Network (ISDN) User Part;
ANSI T1.114-1992 American National Standard for Telecommunications - Signaling System Number 7 (SS7) - Transaction Capabilities Application Part (TCAP);
ANSI T1.115-1990 American National Standard for Telecommunications - Signaling System Number 7 (SS7) - Monitoring and Measurements for Networks;
ANSI T1.116-1990 American National Standard for Telecommunications - Signaling System Number 7 (SS7) - Operations, Maintenance and Administration Part (OMAP);
ANSI T1.118-1992 American National Standard for Telecommunications - Signaling System Number 7 (SS7) - Intermediate Signaling Network Identification (ISNI);
Bellcore GR-905-CORE, Common Channel Signaling Network Interface Specification (CCSNIS) Supporting Network Interconnection, Message Transfer Part (MTP), and Integrated Services Digital Network User Part (ISDNUP);
Bellcore GR-954-CORE, CCS Network Interface Specification (CCSNIS) Supporting Line Information Database (LIDB) Service;
Bellcore GR-1428-CORE, CCS Network Interface Specification (CCSNIS) Supporting Toll Free Service;
Bellcore GR-1429-CORE, CCS Network Interface Specification (CCSNIS) Supporting Call Management Services; and,
Bellcore GR-1432-CORE, CCS Network Interface Specification (CCSNIS) Supporting Signaling Connection Control Part (SCCP) and Transaction Capabilities Application Part (TCAP).
Local Switch and Access Tandem Trunks Interface Requirements
GR-317-CORE GR-394-CORE)
Network Interconnection Additional Requirements
GR-317-CORE, Switching System generic requirements for Call Control Using the Integrated Services Digital Network User Part (ISDNUP), Bellcore , February, 1994;
GR-394-CORE, Switching System generic requirements for Interexchange Carrier Interconnection Using the Integrated Services Digital Network User Part (ISDNUP), Bellcore , February, 1994;
FR-NWT-000271, OSSGR Operator Services Systems generic requirements, Bellcore , 1994 Edition; and
FR-NWT-000064, LATA Switching Systems Generic Requirements (LSSGR), Bellcore , 1994 Edition.

ATTACHMENT 4

INTERCONNECTION

TABLE OF CONTENTS

SECTION 1. NETWORK INTERCONNECTION METHODS. ---------- 2

SECTION 2. INTERCONNECTION TRUNKING ARRANGEMENTS. ---------- 8

SECTION 3. SIGNALING. ----------15

SECTION 4. REPORTING. ----------16

SECTION 6. SERVICING. ----------19

SECTION 7. NETWORK MANAGEMENT. ----------20

SECTION 8. THIRD PARTY TRANSIT TRAFFIC. ----------20

SECTION 9. COMPENSATION FOR CALL TERMINATION. ----------21

INTERCONNECTION

Section 1. Network Interconnection Methods.

1.1 The Parties shall provide interconnection with each other's networks for the transmission and routing of telephone exchange service (local) and exchange access (intraLATA toll and switched access). The Parties shall work cooperatively to install and maintain efficient and reliable Interconnection arrangements. Upon request by MCIm, BellSouth shall provide Interconnection to MCIm, at any technically feasible point, at least equal in quality to that provided by BellSouth to itself or to any subsidiary, Affiliate, or any other third party to which BellSouth provides Interconnection. The parties shall provide Interconnection at the rates contained in Attachment 1 of this Agreement.

1.2 BellSouth shall provide Interconnection at any Technically Feasible point, including, but not limited to, a Fiber Meet, at one or more locations in each LATA in which MCIm originates local, intraLATA toll or Meet Point Switched Access traffic and interconnects with BellSouth. MCIm may designate a Point of Interconnection at any Technically Feasible point including but not limited to any electronic or manual cross-connect points, collocations, telco closets, entrance facilities, and Joint Fiber Facilities. Entrance facilities and Joint Fiber Facilities are specified in subsection 1.5, below.

1.3 MCIm will designate the Point or Points of Interconnection and determine the method or methods by which the Parties interconnect. Each party shall be responsible for the costs of transporting its originated calls to the Point of Interconnection.

1.3.1 If MCIm determines to establish new or change existing Points of Interconnecion with BellSouth, it will provide written notice of the need to establish or change such Interconnection to BellSouth. The time necessary to implement the arrangement shall be negotiated by the Parties, based on the arrangement requested and availability of facilities.

1.3.2 The Parties shall determine the appropriate sizing for Interconnection facilities based on mutual forecasts as set forth in Section 5 of this Attachment.

1.4 MCIm must establish, at a minimum, one Point of Interconnection with BellSouth within the LATA. If MCIm chooses to interconnect at a single Point of Interconnection within a LATA, the interconnection must be at a BellSouth Access Tandem. Furthermore, for LATAs served by multiple access tandems, MCIm must establish trunks from the Point of Interconnection to the remaining BellSouth access tandems where MCIm NXXs are "homed." It is MCIm's responsibility to enter its own NPA/NXX access tandem "homing" arrangements into the national Local Exchange Routing Guide (LERG).

1.4.1 In order for MCIm to home its NPA/NXX(s) on a BellSouth tandem, MCIm's NPA/NXX(s) must be assigned within the Exchange Rate Center Areas served by that BellSouth tandem as specified by BellSouth. Any new rate centers established by either Party within a BellSouth tandem serving area must be approved by the Commission and defined in the Business Rating Interface Database System ("BRIDS") and the Local Exchange Routing Guide ("LERG"). The specified association between BellSouth tandems and Exchange Rate Center Areas will be defined in the LERG.

1.4.2 BellSouth will be responsible for engineering and maintaining its network on its side of the Point of Interconnection. MCIm will be responsible for engineering and maintaining its network on its side of the Point of Interconnection. The Point of Interconnection also serves as the point for determining compensation for call transport and termination. The Point of Interconnection has, including, but not limited to, the following main characteristics:

1. It is a point to allow connection, disconnection, transfer or restoration of service.
2. It is a point where BellSouth and MCIm can verify and maintain specific performance objectives.
3. It is specified according to the interfaces specified in this Agreement
4. The Parties provide their own equipment to interface with the DS0, DS1, DS3, STS1 and/or OCn circuits.

1.4.3 The Parties shall comply with the environmental hazard provisions of Attachments 5 and 6 of this Agreement.

1.4.4 BellSouth shall respond as to the availability of the location and method of Interconnection selected by MCIm and as described in this Agreement, and the Parties shall schedule whatever meetings are required to establish a project plan and use best efforts to complete the Interconnection arrangement by the desired Interconnection Activation Date.

1.5 Each Party may purchase interconnection facilities (e.g., local channel-dedicated and/or interoffice transport-dedicated, etc.) from the other or from a third Party for the delivery of its originated traffic to the established Point of Interconnection between the Parties. Such facilities, if purchased by one Party from the other, will be billed in accordance with Attachment 1 of this Agreement and are not part of the call transport and termination facilities for which reciprocal compensation is owed to the Party leasing the facility to the other. For the purposes of this Attachment, local channel-dedicated is defined as a transport facility between a point designated by the purchasing Party and the other Party's wire center that serves the designated point ("Serving Wire Center"). For the purposes of this Attachment, interoffice transport-dedicated is defined as a transport facility between wire centers designated by the purchasing Party.

1.6 Joint Fiber Facilities.

1.6.1 Joint Optical Interconnection

1.6.1.1 Upon mutual agreement by both Parties, the Parties may interconnect using a Joint Optical Interconnection. If the Parties interconnect pursuant to a Joint Optical Interconnection (JOI) arrangement, MCIm and BellSouth shall jointly engineer and operate a Synchronous Optical Network ("SONET") transmission system by which they shall interconnect their networks. The Parties shall work jointly to determine the specific transmission system. The Parties shall meet within a reasonable period of time to determine the technical specifications for the transmission system, and existing systems shall be given priority in the selection of the specifications, provided the existing systems' capacity meets the Parties' combined two-year forecasts. The SONET transmission equipment deployed by the Parties must be compatible with the technical specifications determined by the Parties, and the Data Communications Channel (DCC) must be turned off.

1.6.1.2 The Parties shall jointly coordinate and undertake maintenance of the SONET transmission system. Each Party shall be responsible for maintaining the components of their own SONET transmission system.

1.6.1.3 BellSouth shall, wholly at its own expense, procure, install and maintain the agreed upon SONET equipment in the BellSouth Interconnection Wire Center ("BIWC").

1.6.1.4 MCIm shall, wholly at its own expense, procure, install and maintain the agreed upon SONET equipment in the MCIm Interconnection Wire Center ("MCIm Wire Center").

1.6.1.5 MCIm shall designate a manhole or other suitable entry way located outside the BIWC and BellSouth shall make all necessary preparations to receive and to allow and enable MCIm to deliver fiber optic facilities into that manhole, providing sufficient spare length of Optical Fire Resistance (“OFR”) cable to reach the Fiber Optical Terminal (“FOT”) equipment in the BIWC. MCIm shall deliver and maintain such strands wholly at its own expense. BellSouth shall take the fiber from the manhole and terminate it inside the BIWC in the FOT equipment at BellSouth’s expense.

1.6.1.6 BellSouth shall designate a manhole or other suitable entry way outside MCIm’s Wire Center and MCIm shall make all necessary preparations to receive and to allow and enable BellSouth to deliver fiber optic facilities into that manhole, providing sufficient spare length of OFR cable to reach the FOT equipment at MCIm’s Wire Center. BellSouth shall deliver and maintain such strands wholly at its own expense. MCIm shall take the fiber from the manhole and terminate it inside MCIm’s Wire Center in the FOT equipment at MCIm’s expense.

1.6.1.7 The Parties shall use the Joint Fiber Facility for delivery of traffic, including Local, transit and intraLATA, between the Parties. Provided, however, special access traffic shall not be routed over the Joint Fiber Facility.

1.6.1.8 Notwithstanding the provisions of Section 2.1.1.4, neither Party shall charge the other for the use of the JOI facility for the transmission of traffic to the other Party’s location. However, appropriate call transport and termination charges and switched access charges, associated with the rest of either Party’s network, for Local Traffic and intraLATA toll traffic shall apply in accordance with this Agreement and applicable Commission-approved switched access tariffs. Nothing in this Agreement shall alter the charges assessed by either Party to a third party carrier for delivery of transit traffic. Charges for the use of the JOI for transit traffic shall be billed by MCIm to the appropriate carrier.

1.6.1.9 Each Party shall use its best efforts to ensure that fiber received from the other Party will enter the Party’s Wire Center

through an entrance facility separate from that from which the Party's own fiber exited.

1.6.1.10 The Parties shall work cooperatively to determine the assignment control of the fiber strands that will be used for the JOI facility.

1.6.1.11 The Parties shall cooperate with one another for the purpose of maintaining and testing the fiber-optic cable.

1.6.1.12 Unless otherwise limited by existing equipment constraints in subsection 1.6.1.1, above, the minimum data rate hand off of the SONET transmission system must be at OC-48. Unless otherwise mutually agreed, the OC-48 system will be activated in OC-12 increments. Trunks using the OC-48 transmission system shall be combined at the DS0, DS1, DS3, STS1, and OCn levels.

1.6.2 Fiber Meet.

1.6.2.1 If MCIm elects to establish a Point of Interconnection with BellSouth pursuant to a Fiber Meet, MCIm and BellSouth shall jointly engineer and operate a Synchronous Optical Network ("SONET") transmission system by which they shall interconnect their networks for the transmission and routing of traffic via a Local Channel facility. The Parties shall work jointly to determine the specific transmission system. The Parties shall meet within a reasonable period of time to determine the technical specifications for the transmission system, and existing systems shall be given priority in the selection of the specifications, provided the existing systems' capacity meets the Parties' combined two-year forecasts. The SONET transmission equipment deployed by the Parties must be compatible with the technical specifications determined by the Parties, and the Data Communications Channel (DCC) must be turned off.

1.6.2.2 BellSouth shall, wholly at its own expense, procure, install and maintain the agreed upon SONET equipment in the BellSouth Interconnection Wire Center ("BIWC").

1.6.2.3 MCIm shall, wholly at its own expense, procure, install and maintain the agreed upon SONET equipment in the MCIm Interconnection Wire Center ("MCIm Wire Center").

1.6.2.4 The Parties shall designate a Point of Interconnection, not within either Party's wire center, as a Fiber Meet point, and shall make all necessary preparations to receive, and to allow and enable MCIm to deliver, fiber optic facilities into the Point of Interconnection with sufficient spare length to reach the fusion splice point at the Point of Interconnection. BellSouth shall, wholly at its own expense, procure, install, and maintain the fusion splicing point in the Point of Interconnection. A Common Language Location Identification ("CLLI") code, which must be a building type code, will be established for each Point of Interconnection and will be noted properly on orders between the Parties.

1.6.2.5 Each Party shall deliver and maintain its fiber wholly at its own expense. Upon request by MCIm, BellSouth shall allow MCIm access to the Fiber Meet entry point for maintenance purposes as promptly as possible.

1.6.2.6 The Parties shall jointly coordinate and undertake maintenance of the SONET transmission system. Each Party shall be responsible for maintaining the components of their own SONET transmission system.

1.6.2.7 Each Party will be responsible for (i) providing its own transport facilities to the Fiber Meet, and (ii) the cost to build-out its facilities to such Fiber Meet.

1.6.2.8 Neither Party shall charge the other for its portion of the Fiber Meet facility used exclusively for non-transit local traffic (i.e. the Local Channel). Charges incurred for other services including dedicated transport facilities to the Point of Interconnection, if applicable, will apply. Charges for Switched and Special Access Services shall be billed to the appropriate carrier in accordance with the applicable Commission approved switched access service tariff.

1.6.2.9 Unless otherwise limited by existing equipment constraints in subsection 1.6.2.1, above, the minimum data rate hand off of the SONET transmission system must be at OC-48. Unless otherwise mutually agreed, the OC-48 system will be activated in OC-12 increments. Trunks using the OC-48 transmission system shall be combined at the DS0, DS1, DS3, STS1, and OCn levels.

1.7 Sizing and Structure of Joint Fiber Facilities.

The capacity of Interconnection facilities provided by each Party will be based on mutual forecasts and sound engineering practice, as agreed by the Parties during planning and forecasting meetings. The Parties will determine the appropriate sizing for facilities based on these standards. The Parties shall work cooperatively to ensure the adequacy of Interconnection facilities. The Parties shall augment existing facilities when the overall capacity of those facilities is 75-85% used, or as otherwise agreed. Facilities will be augmented to ensure adequate facility capacity for at least two years of forecasted traffic. The Parties shall complete the construction of relief facilities at least two months prior to the projected exhaust date, or sooner, if facilities exhaust is imminent.

Section 2. Interconnection Trunking Arrangements.

2.1 General.

2.1.1 The parties shall reciprocally terminate local exchange traffic and IntraLATA/InterLATA toll calls on each other's networks as follows:

2.1.1.1 The Parties will establish those trunk groups necessary to exchange local, intraLATA toll, and local and IntraLATA transit traffic (referred to in this Attachment 4 as "Local Interconnection Trunk Groups").

2.1.1.2 BellSouth and MCIm shall establish interconnecting trunk groups and trunking configurations between networks in accordance with the provisions set forth in this Agreement.

2.1.1.3 Any MCIm interconnection request that (1) deviates from the standard trunking architectures as described in this Agreement; (2) affects traffic delivered to MCIm from a BellSouth switch; and (3) requires special BellSouth switch translations and other network modifications will require MCIm to submit a Bona Fide Request/New Business Request via the Bona Fide Request/New Business Request Process set forth in General Terms and Conditions.

2.1.1.4 All charges, both non-recurring and recurring, associated with interconnecting trunk groups between BellSouth and MCIm are set forth in Attachment 1 of this Agreement. For two-way trunking that carries both Parties' traffic, including trunking that carries Transit Traffic, each Party

shall pay its proportionate share of the recurring charges for transport facilities and nonrecurring charges for facility additions based on the percentage of the total traffic originated by that Party. BellSouth shall determine the applicable percentages twice per year based on the previous 6 months' minutes of use billed by each Party. Each Party shall pay its proportionate share of the nonrecurring charges for initial facilities based on the joint forecasts for circuits required by each Party. Each Party shall be responsible for ordering and paying for any facilities for two-way trunks carrying only its transit traffic. Furthermore, each Party shall be responsible for the compensation for transport facilities for two-way trunking that it orders for its traffic but utilizes unidirectionally.

2.1.1.5 BellSouth shall transit Switched Access traffic from IXCs to MCIm based on MCIm's NXX Access Tandem homing arrangement as specified by MCIm in the national Local Exchange Routing Guide (LERG).

2.1.1.6 Two-Way Trunking Requirements:

2.1.1.6.1 The Parties will order trunks using the access service request (ASR) process in place for Local Interconnection after the joint planning meeting takes place between BellSouth and MCIm.

2.1.1.6.2 BellSouth and MCIm agree to meet and resolve service-affecting situations in a timely manner. This contact will normally be made through the Account Team.

2.1.1.6.3 Establishing a two-way trunk group does not preclude BellSouth from adding one-way trunk groups within the same Local Calling Area, as long as such one-way trunk groups are agreed to by MCIm.

2.1.1.6.4 BellSouth will be responsible for the installation and maintenance of its trunks and facilities to its side of the Point of Interconnection, and MCIm will be responsible for the installation and maintenance of its trunks and facilities on its side of the Point of Interconnection.

2.1.2 One-way and two-way trunks. The parties shall use either one-way or two-way trunking or a combination, as specified by MCIm. The Parties shall work cooperatively to decide when to use two-way trunking on a case by case basis that is mutually beneficial to both

Parties. **If the Parties are unable to agree, MCIm shall make the final determination.**

2.1.3 Where necessary, BellSouth shall load MCIm's NXXs in BellSouth's switches based on the information for those NXXs as specified by MCIm in the national Local Exchange Routing Guide (LERG), and BellSouth shall switch traffic as specified by the NXX tandem homing arrangement in the LERG.

2.1.4 BellSouth Access Tandem Interconnection Architectures.

2.1.4.1 BellSouth Access Tandem Interconnection provides intratandem access to subtending end offices. BellSouth Multiple Tandem Access (MTA), described later in this Agreement, may be ordered using any of the following access tandem architectures.

2.1.4.2. Basic Architecture.

2.1.4.2.1 In this architecture, MCIm's originating Local and IntraLATA Toll and originating and terminating Transit Traffic is transported on a single two-way trunk group between MCIm and BellSouth access tandem(s) within a LATA. This group carries intratandem Transit Traffic between MCIm and Independent Companies, Interexchange Carriers, other Competitive Local Exchange Carriers ("CLEC") and other network providers. This group also carries MCIm originated intertandem traffic transiting a single BellSouth access tandem destined to third party tandems such as an Independent Company tandem or other CLEC tandem. BellSouth originated Local and IntraLATA Toll traffic is transported on a single one-way trunk group terminating to MCIm. Other trunk groups for operator services, directory assistance, emergency services and intercept may be established if required. The LERG should be referenced for current routing and tandem serving arrangements.

2.1.4.3 Supergroup Architecture.

2.1.4.3.1 In the Supergroup Architecture, the Parties Local, IntraLATA Toll and MCIm's Transit Traffic (that may include traffic to or from a third party IXC) is exchanged on a single two-way trunk group (also known

as a Combination Interconnection Trunk Group) between MCIm and BellSouth. This group carries, in addition to the Parties Local traffic, all intratandem Transit Traffic between MCIm and Independent Companies, Interexchange Carriers, other CLECs and other network providers. This group also carries MCIm originated intertandem traffic transiting a single BellSouth access tandem destined to third party tandems such as an Independent Company tandem or other CLEC tandem. Other trunk groups for operator services, directory assistance, emergency services and intercept may be established if required. The LERG should be referenced for current routing and tandem serving arrangements.

2.2 Local Interconnection Trunking Arrangements.

2.2.1 LATA Wide Termination. MCIm may elect LATA Wide Termination with BellSouth, otherwise known as Multiple Tandem Access ("MTA"). Under such an arrangement, the Parties will establish Local Interconnection Trunk Groups to a single BellSouth access tandem designated by MCIm for the termination of all Local Interconnection Traffic destined for any BellSouth office in that LATA.

2.2.1.1 BellSouth MTA provides for LATA wide BellSouth transport and termination of MCIm-originated intraLATA toll and local traffic that is transported by BellSouth for termination to BellSouth or a third party, by establishing trunks at a BellSouth access tandem with routing through multiple BellSouth access tandems as required. With MTA, MCIm may elect to send its originating traffic to any access tandem in the LATA, for completion by BellSouth, regardless of whether MCIm has interconnection trunks established at any other tandem in the LATA. Under MTA BellSouth shall not charge more than two tandem switching charges for any given call. However, MCIm must still establish trunks at all BellSouth access tandems where MCIm NXXs are "homed". MCIm shall order MTA, at its option, via the ASR process, at the rates set forth in Attachment 1.

2.2.1.2 MTA does not include switched access traffic that transits the BellSouth network to an Interexchange Carrier (IXC).

2.2.2 Tandem Level Termination. MCIm may elect Tandem Level Termination with BellSouth. Under such an arrangement, the Parties will establish Local Interconnection trunk groups to each BellSouth

Access Tandem in a LATA in which MCIm originates Local Interconnection traffic and interconnects with BellSouth.

2.2.2.1 To the extent MCIm does not purchase MTA in a calling area that has multiple access tandems serving the calling area as defined by BellSouth, MCIm must establish trunks to every access tandem in the calling area in order to serve the entire calling area. To the extent MCIm does not purchase MTA and provides intraLATA toll service to its customers, it may be necessary for it to establish trunks to additional BellSouth access tandems that serve end offices outside the local calling area. To the extent MCIm routes its traffic in such a way that utilizes BellSouth's MTA service without properly ordering MTA service, MCIm agrees to pay BellSouth the associated transport and termination charges.

2.2.3 If BellSouth establishes remote offices that are capable of receiving direct trunking, BellSouth shall make such capability available to MCIm.

2.2.4 Where the Parties deliver miscellaneous calls (i.e. time, weather, NPA-555, Mass Calling Codes) destined for each other over the Local Interconnection trunk group, they shall deliver such traffic in accordance with the serving arrangements defined in the LERG.

2.2.5 At MCIm's request, BellSouth shall provide unidirectional traffic on two-way trunks, for MCIm's originating traffic, effectively operating them as if they were one-way trunk groups.

2.2.6 BellSouth shall permit MCIm to combine local, InterLATA, and transit traffic on one trunk group, provided the calls are properly timed, rated, and billed.

2.2.7 BellSouth shall post on its web site a list of NPA-NXX's that constitute local calls from BellSouth's originating NPA-NXXs for each local calling area in the BellSouth region. Such list shall be updated on a weekly basis.

2.3 Switched Access Trunking Arrangements.

2.3.1 At its option, MCIm may order two-way transit trunk groups to each BellSouth access tandem where MCIm has its NXX's homed for the joint provisioning of Switched Access Services in accordance with MECAB guidelines, using DS-1 or DS-3 facilities separate from those used for Local Interconnection trunk groups.

2.3.2 In multiple-tandem LATAs, BellSouth shall, except in instances of capacity limitations, permit and enable MCIm to subtend the BellSouth Access Tandem nearest to the MCIm Rating Point, adopted in accordance with Section 1.4.1 of this Attachment associated with the NPA-NXX to/from which the Meet Point services are homed. In instances of capacity limitation at a given Access Tandem, MCIm may subtend the next nearest BellSouth Access Tandem in which sufficient capacity is available by homing its NPA-NXX(s) on that tandem. The Meet Point billing percentages for each new Rating Point/Access Tandem pair will be calculated in accordance with MECAB and MECOD guidelines.

2.3.3 At MCIm's request, where MCIm is providing the switching, MCIm may order and BellSouth shall provide trunk groups exclusively to carry interLATA traffic originated by an MCIm customer.

2.3.4 All originating Toll Free Service calls for which MCIm requests that BellSouth perform the Service Switching Point ("SSP") function (e.g., perform the database query) must be delivered using GR-394 format over the Interconnection trunk group. Carrier Code "0110" and Circuit Code of "09" shall be used for all such calls. BellSouth shall bill MCIm for any queries requested by MCIm, at the rates set forth on Attachment 1 of this Agreement.

2.3.5 All post-query Toll Free Service calls for which MCIm performs the SSP function, if delivered to BellSouth, must be delivered using GR-394 format over the Interconnection trunk group for calls destined to the switched access Toll Free Service provider.

2.3.6 Originating 950 calls delivered to BellSouth's tandem from MCIm will be delivered to the appropriate associated interexchange carrier using the appropriate signaling format.

2.3.7 MCIm shall be permitted to offer tandem services for switched access traffic. In order to ensure that BellSouth receives appropriate switched access charges, MCIm shall provide the appropriate billing records for any trunk groups carrying access traffic that would enable BellSouth to bill for the switched access services it provides in conjunction with MCIm's tandem service. The billing records shall be subject to audit pursuant to Part A of this Agreement**.**

2.3.8 Combination Interconnection Trunk Groups.

2.3.8.1 At MCIm's request, BellSouth shall provision a Combination Interconnection Trunk Group, which carries the Parties' Local, IntraLATA Toll, and MCIm's transit traffic (that may include traffic to or from a third party IXC) on a single two-way trunk group. This group carries, in addition to the Parties Local traffic, all intratandem Transit Traffic between MCIm and Independent Companies, Interexchange Carriers, other CLECs and other network providers. This group also carries MCIm originated intertandem traffic transiting a single BellSouth access tandem destined to third party tandems such as an Independent Company tandem or other CLEC tandem. Other trunk groups for operator services, directory assistance, emergency services and intercept may be established if required. The LERG should be referenced for current routing and tandem serving arrangements.

2.3.8.2 Upon MCIm's request, the Parties will work together in good faith to complete conversions to the use of Combination Interconnection trunk groups, within an interval to be negotiated by the Parties. The Parties shall use the normal ASR ordering process, and MCIm shall pay the appropriate charges associated with the request.

2.4 The Parties shall utilize direct end office trunking under the following conditions:

2.4.1 Tandem Exhaust. If a tandem through which the Parties are interconnected is unable to, or is forecasted to be unable to, support additional traffic loads for a six month forecasting cycle, the Parties will mutually agree on an end office trunking plan for future trunking additions until BellSouth has alleviated the tandem capacity shortage. BellSouth shall take appropriate action to alleviate tandem capacity shortage if such tandem is unable to, or is forecasted to, be unable to support additional traffic loads for any period of time.

2.4.1.1 If a tandem through which the parties are interconnected is unable to, or is forecasted to be unable to, support additional traffic loads for any period of time, the parties will mutually agree on an end office trunking plan that will alleviate the tandem capacity shortage and ensure completion of traffic between MCIm and ILEC subscribers**.**

2.4.2 Traffic volume. Either Party may order, and the other Party shall install and retain, direct end office two-way trunking sufficient to handle actual or reasonably forecasted two-way traffic volumes,

whichever is greater, between an MCIm switching center and a BellSouth end office where the traffic exceeds 220,000 minutes of use per month. When the traffic between an MCIm switching center and a BellSouth end office exceeds 170,000 minutes of use per month, either Party may notify the other Party and request that the facilities be installed. Such facilities will be installed on mutual agreement. The parties will install additional capacity between the MCIm switching center and the BellSouth end office when overflow traffic between the MCIm switching center and BellSouth access tandem exceeds or is forecast to exceed, 220,000 minutes of use per month.

2.4.3 Mutual Agreement - The Parties may install direct end office trunking upon mutual agreement in the absence of conditions (1) or (2) above and agreement will not unreasonably be withheld.

Section 3. Signaling.

3.1 Unless otherwise indicated in this Agreement, all Interconnection facilities must be 64 Kbps Clear Channel Capability (CCC) and Extended Super Frame with Binary 8 Zero Substitution line coding (“ESF B8ZS”). Where ESF/B8ZS is not available, MCIm shall use other interconnection protocols on an interim basis until the standard ESF/B8ZS is available. BellSouth will provide anticipated dates of availability, if any, and upon MCIm’s request for those areas not currently ESF/B8ZS compatible.

3.1.1 Where MCIm is unwilling to utilize an alternate interconnection protocol, MCIm will provide BellSouth an initial forecast of 64 Kbps Clear Channel Capability (“64K CCC”) trunk quantities within 30 days of executing this Agreement, consistent with the forecasting agreements between the parties. Upon receipt of this forecast, the parties will begin joint planning for the engineering, procurement, and installation of the segregated 64K CCC Local Interconnection Trunk Groups, and the associated B8ZS Extended Super Frame (“ESF”) facilities, for the sole purpose of transmitting 64K CCC data calls between MCIm and BellSouth. Where additional equipment is required, such equipment would be obtained, engineered, and installed on the same basis and with the same intervals as any similar growth job for IXC, CLEC or ILEC internal subscriber demand for 64K CCC trunks. Where Technically Feasible, these trunks will be established as two-way. MCIm, at its option, may order interconnection facilities formatted using Alternate Mark Inversion Line Code or Superframe Format.

3.2 Unless otherwise agreed to by the Parties, the Parties will interconnect their networks using SS7 signaling as defined in GR-317 and GR-394 including ISDN User Part ("ISUP") for trunk signaling and Carrier Identification Code ("CIC"), where available, and Transaction Capabilities Application Part ("TCAP") for Common Channel Signaling ("CCS")-based features in the interconnection of their networks. All Network Operations Forum (NOF) adopted standards shall be adhered to. Both MF and SS7 trunk groups will not be provided within a single DS-1 facility; a separate DS-1 per signaling type must be used.

3.2.1 The parties will provide CCS to each other in conjunction with all trunk groups supporting local, transit, and toll traffic. The parties will cooperate on the exchange of Transactional Capabilities Application Part (TCAP) messages to facilitate full inter-operability of CCS-based features between their respective networks, including all CLASS features and functions currently deployed by BellSouth. All CCS signaling parameters will be provided including automatic number identification (ANI), originating line information (OLI), calling party category, charge number, etc. All privacy indicators will be honored.

3.2.2 The parties shall meet and mutually agree to network protocols which include but are not limited to glare parameters, number of digits outpulsed, OZZ codes and 800 CIC codes in use.

3.3 Neither Party shall alter the CCS parameters, or be a party to altering such parameters, or pass CCS parameters that it knows have been altered in order to circumvent appropriate interconnection charges.

Section 4. Reporting.

4.1 BellSouth shall provide all blockage data on every trunk group that carries MCIm's local traffic, blockage on those trunk groups that emanate from BellSouth's end offices or tandems and are interconnected with MCIm's switch, and information on comparable trunks used by BellSouth for its local traffic.

4.1.1 Blocking data will be provided via the BellSouth's web site on a monthly basis, in a format similar to the IC 100 report that is provided to interexchange carriers.

4.2 Each Party shall provide Data Interexchange Carrier (DIXC) traffic data for all trunk groups terminating in the other Party's network.

4.2.1 DIXC traffic data will include, but not be limited to the following:

4.2.1.1 Usage (total usage measured in centum call seconds);

4.2.1.2 Peg Count (Peg count of originating call attempts including overflow), where applicable;

4.2.1.3 Overflow (Peg count of originating call attempts failing to find an idle trunk), where applicable.

4.2.2 DIXC traffic data shall be collected as follows:

4.2.2.1 Hourly on the clock hour;

4.2.2.2 Twenty-four (24) hours per day (0000-2400);

4.2.2.3 Seven (7) days per week (including holidays);

4.2.2.4 Fifty-two (52) weeks per year.

4.2.3 DIXC traffic data must be provided electronically using a method agreed to by the Parties, as it is collected.

Section 5. Forecasting.

5.1 The parties shall work towards the development of joint forecasting responsibilities for traffic utilization over trunk groups, and shall use best efforts to ensure that facilities and equipment are available at the time of ordering. The Parties shall make all reasonable efforts and cooperate in good faith to develop alternative solutions to accommodate orders when facilities or equipment are not available. Inter-company forecast information, must be provided by the Parties, to each other, twice a year. BellSouth's forecast will be provided thirty (30) days following the receipt of the MCIm forecast. The Parties agree that each forecast provided under this Section shall be deemed "Confidential Information" in the General Terms and Conditions – Part A of this Agreement. The semi-annual forecasts shall include:

5.1.1 Yearly forecasted trunk quantities which include measurements that reflect actual tandem and end office Local Interconnection and transit trunks and tandem-subtending Local Interconnection end office equivalent trunk requirements for no more than two years (current plus one year);

5.1.2 The use of Common Language Location Identifier (CLLI-MSG), which are described in Telcordia (Bellcore) documents BR 795-100-100 and BR 795-400-100;

5.1.3 Description of major network projects that affect the other party will be provided in the semi-annual forecasts. Major network projects include but are not limited to trunking or network rearrangements, shifts in anticipated traffic patterns, or other activities by either party that are reflected by a significant increase or decrease in trunking demand for the following forecasting period.

5.2 The Parties shall meet to review and reconcile their forecasts if forecasts vary significantly, or whenever the latest forecasted trunk requirements exceed the original quantities by 10% or more state-wide. Either Party should notify the other Party if they have measurements indicating that a trunk group is exceeding its designed call carrying capacity and is impacting other trunk groups in the network. The Parties shall mutually agree to the over or under trunk group utilization prior to action being taken on the following:

5.2.1 If the Parties are unable to reach such reconciliation, the Local interconnection Trunk Groups shall be provisioned to the higher forecast. At the end of three months, the utilization of the Local Interconnection Trunk Groups will be reviewed and if the average centum call seconds utilization for the third month is under seventy-five percent (75%), or such other percentage as the Parties may agree, of capacity at the average time consistent busy hour, either party may issue an order to resize the trunk group, which shall be left with not less than fifteen percent (15%), or such other percentage as the Parties may agree, excess capacity at the average time consistent busy hour.

5.2.2 If the parties agree on the original forecast and then it is determined that a trunk group is under seventy-five percent (75%), or such other percentage as the Parties may agree, of centum call seconds capacity at the average time consistent busy hour on a monthly-average basis for each month of any six-month period, either party may issue an order to resize the trunk group, which shall be left with not less than fifteen percent (15%), or such other percentage as the Parties may agree, excess capacity at the average time consistent busy hour.

5.3 Each party shall provide a specified point or points of contact for planning, forecasting and trunk servicing purposes.

Section 6. Servicing.

6.1 Orders between the parties to establish, add, change or disconnect trunks shall be processed by use of an Access Service Request (ASR), or another industry standard eventually adopted and mutually agreed to by the Parties to replace the ASR for local service ordering.

6.2 Subject to 6.3 below, the standard interval used for the provisioning of Local Interconnection trunk groups shall be determined by Desired Due Date, but in no event shall it be longer than ten (10) working days from the receipt of an error-free ASR for orders of 96 trunks or fewer for additions to local trunk groups, or forty-five (45) working days from the receipt of an error-free ASR for establishment of 96 trunks or fewer new trunk groups.

6.3 Orders that comprise a major project (i.e., more than 96 new or additions) that directly impact the other party may be submitted at the same time, and their implementation shall be jointly planned and coordinated. Major projects are those that require the coordination and execution of multiple orders or related activities between and among BellSouth and MCIm work groups, including but not limited to the initial establishment of Local Interconnection or transit trunk groups and service in an area, NXX code moves, re-homes, facility grooming, or network rearrangements.

6.4 For intraLATA toll service and local exchange service, the blocking level from originating NID to terminating NID will be engineered not to exceed 1% in any hour, except under conditions of service disruption. For access to or egress from a long distance network, the blocking rate will be engineered not to exceed 0.5% in any hour.

6.5 The Parties shall share responsibility for all Control Office functions for Local Interconnection trunks and trunk groups, and both Parties shall share the overall coordination, installation, testing, and maintenance responsibilities for these trunks and trunk groups.

6.6 Where MCIm interconnects with a third party through BellSouth, MCIm is responsible for all Control Office functions for such other Interconnection trunks and trunk groups, and is responsible for the overall coordination, installation, testing, and maintenance responsibilities for these trunks and trunk groups.

6.7 MCIm and BellSouth shall provide to each other test-line numbers and access to test lines for the purpose of testing BST/MCIm interconnection trunk groups.

Section 7. Network Management.

7.1 Protective Protocols - Either party may use protective network traffic management controls such as 7-digit and 10-digit code gaps on traffic toward each others network, when required to protect the public switched network from congestion due to facility failures, switch congestion or failure, or focused overload. MCIm and BellSouth will immediately notify each other of any protective control action planned or executed.

7.2 Expansive Protocols - Where the capability exists, originating or terminating traffic reroutes may be implemented by either Party to temporarily relieve network congestion due to facility failures or abnormal calling patterns. Reroutes will not be used to circumvent normal trunk servicing. MCIm and BellSouth will immediately notify each other of any expansive protocols planned or executed.

7.3 Mass Calling - MCIm and BellSouth shall cooperate and share pre-planning information, where available, regarding cross-network call-ins expected to generate large or focused temporary increases in call volumes, to prevent or mitigate the impact of these events on the public switched network.

7.4 High Volume Calling Trunk Groups. At MCIm's request, the Parties will cooperate to establish separate trunk groups or provide some other means of protective controls (i.e., call gapping) for the completion of calls to high volume customers, such as radio contest lines.

7.4.1 Both parties agree to terminate each party's mass calling codes as local traffic. Parties agree that each will put in place controls for NXX's that are dedicated for media stimulated mass calling.

7.4.2 Further, each Party shall provide notification to the other Party when a new routing code (a.k.a. "oddball code") is being established. Notification is not required for new routing codes being established as the direct result of an NPA split, but notification is required for NPA overlays.

Section 8. Third Party Transit Traffic.

8.1 Tandem Switching shall provide connectivity to transit traffic to and from other carriers.

8.1.1 Each Party shall transit all traffic delivered by the other Party, destined to third party LECs, CLECs or CMRS providers in the LATA

that subtend the transiting Party's switch. Each Party also shall transit all traffic delivered by a third party LEC, CLEC, or CMRS provider in the LATA, destined to the other Party or a switch subtending the other Party. Routing and billing of transit traffic is as specified in Section 9 of this Attachment.

8.1.2 Each Party shall terminate all traffic delivered by the other Party from third party LECs, CLECs or CMRS providers in the LATA, and destined to the terminating Party's switch. Routing and billing of transit traffic is as specified in this Attachment.

Section 9. Compensation For Call Termination.

9.1 General.

9.1.1 For the purposes of compensation for call termination under this Agreement, the traffic exchanged between MCIm and BellSouth will be classified as Local Traffic, ISP-bound Traffic, IntraLATA Toll Traffic, Transit Traffic, or switched access Traffic. The Parties agree that, notwithstanding the classification of traffic under this Agreement, either Party is free to define its own local calling areas for the purposes of providing Telecommunications Services to its own Customers.

9.2 Usage Measurement.

9.2.1 Each Party is responsible for the accuracy and quality of its data as submitted to the other.

9.2.2 Each Party will include in the information transmitted to the other for each call being terminated on the other Party's network the originating CPN, if recorded , otherwise ANI or billing telephone number (BTN) will be provided, where recorded. Where ANI or BTN are not recorded, the telephone number assigned to the trunk group for recording purposes will be inserted in the BTN field to the extent the telephone number has been provided by the originating carrier. Unless and until BellSouth notifies MCIm that an independent telephone company has adopted an alternative to the primary carrier plan, for intraLATA toll calls originating on an independent telephone company's network, MCIm shall presume that BellSouth is the intraLATA toll carrier, and shall use the 1101 records provided by BellSouth to bill BellSouth the appropriate access charges. If BellSouth notifies MCIm that an independent telephone company has

adopted an alternative to the primary carrier plan, the Parties shall amend this Agreement to incorporate the appropriate access billing methods.

9.2.3 Each Party will calculate terminating Interconnection minutes of use based on standard AMA recordings made within each Party's network. These recordings are the basis for each Party to determine the minutes of use to be billed to the other Party.

9.2.4 Measurement of minutes of use over Interconnection trunk groups will be in actual conversation seconds for terminating usage and network access duration seconds including unanswered attempts for originating usage.

9.3 Compensation for the Termination of Local Traffic. Local Traffic is defined as any telephone call that originates in one exchange and terminates in either the same exchange, or other local calling area associated with the originating exchange (e.g., Extended Area Service) as defined and specified in Section A3 of BellSouth's General Subscriber Service Tariff. Designation of Local Traffic is not dependent on the type of switching technology used to switch and terminate such Local Traffic, including the use of packet switching. Nothing herein is intended to require the payment of reciprocal compensation for packets exchanged between the Parties.

9.3.1 Local Traffic does not include, and the Parties shall not bill or pay reciprocal compensation for, calls where a Party willfully sets up a call, or colludes with a third party to set up a call, to the other Party's network for the purpose of receiving reciprocal compensation, and not for the purpose of providing a telecommunications service to an End User in good faith.

9.3.2 Left Blank Intentionally.

9.3.3 Calls using Internet protocol, regardless of whether the call is data or voice shall be treated the same as circuit switched traffic subject to the FCC rules for intercarrier compensation.

9.4 The rates for transport and termination of Local Traffic that BellSouth and MCIm charge each other are set forth in Attachment 1 of this Agreement.

9.4.1 Pursuant to the Commission's Order in Docket 00-00309, MCIm is entitled to reciprocal compensation for tandem switching because MCIm's switch in the Knoxville area serves a geographic area comparable to the area served by BellSouth's tandem switch. MCIm shall charge BellSouth for tandem switching and end office switching

for all Local Traffic. In addition, in those markets specified in Section 9.4.1.1 below, based upon data provided by MCIm to BellSouth that MCIm's switch serves the same geographic area as BellSouth's tandem switch in such markets, MCIm shall charge BellSouth for common transport where common transport is actually used in the termination of a call at a rate equal to one-half of the facility termination charge for common transport per minute of use for terminating Local Traffic. In all markets covered by this Agreement. BellSouth shall charge MCIm for tandem switching, end office switching, and common transport at the rates set forth in Attachment 1 of this Agreement where those elements actually are used in the termination of a call.

9.4.1.1 The markets in which MCI will bill BellSouth for the common transport component described in Section 9.4.1 above are: Memphis and Knoxville local calling areas, as described in Section 9.3 above.

9.4.1.2 Notwithstanding anything to the contrary in this Agreement, the Parties agree that the reciprocal compensation provisions set forth herein shall be effective prospectively as of March 1, 2002, and the Parties shall not true up any amounts paid or not paid for reciprocal compensation for Local Traffic prior thereto.

9.4.2 For the purposes of this Attachment, BellSouth's Tandem Switching is defined as the function that establishes a communications path between two switching offices through a third switching office (the Tandem switch).

9.4.3 For the purposes of this Attachment, End Office Switching is defined as the function that establishes a communications path between the trunk side and line side of the End Office switch.

9.4.4 If MCIm utilizes a switch outside the LATA and BellSouth chooses to purchase dedicated or common (shared) transport from MCIm for transport and termination of BellSouth originated traffic, BellSouth will pay MCIm no more than the airline miles between the V & H coordinates of the Point of Interconnection within the LATA where MCIm receives the BellSouth-originated traffic and the V & H coordinates of a point on the LATA boundary in the direction of the MCIm switch or at a point otherwise agreed to by the Parties. For these situations, BellSouth will compensate MCIm at either dedicated or common (shared) transport rates specified in Attachment 1 of this Agreement and based upon the functions provided by MCIm as defined in this Attachment.

9.4.5 Neither Party shall represent Switched Access Services traffic as Local Traffic for purposes of payment of reciprocal compensation.

9.4.6 The Parties shall be allowed to assign numbers in the same manner they choose consistent with Applicable Law as long as the Parties properly rate, time, and compensate each other an other carriers for the mutual exchange of such traffic. Calls to an NPA/NXX in a local calling area outside the rate center where the NPA/NXX is home shall be treated as intrastate interexchange toll traffic for purposes of intercarrier compensation and is subject to access charges.

9.4.7..Compensation for ISP-bound Traffic

9.4.7.1 ISP-bound Traffic is defined as calls to an Internet service provider that are dialed by using a local dialing pattern. ISP-bound Traffic is not considered Local Traffic subject to reciprocal compensation, but instead is information access traffic subject to compensation as described by the FCC in its *Order on Remand and Report and Order*, CC Docket Nos. 96-98 and 99-68, FCC 01-31 (released April 27, 2001) ("ISP Remand Order"). All combined ISP-bound Traffic and Local Traffic delivered to one Party by the other Party, including via UNE-P (subject to Section 9.4.8.1.3.), that exceeds a 3:1 ratio of terminating to originating traffic on a statewide basis is ISP-bound Traffic. All combined ISP-bound Traffic and Local Traffic delivered to one Party by the other Party, including via UNE-P (subject to Section 9.4.8.1.3.), that does not exceed a 3:1 ratio of terminating to originating traffic on a statewide basis is Local Traffic.

9.4.7.2 Each Party shall calculate, in accordance with subsection 9.6.1 of this Attachment, the Local Traffic and ISP-bound Traffic that it terminates from the other Party.

9.4.7.3 Subject to Section 9.4.7.8.1 below, for the period beginning on June 14, 2001 and ending on December 13, 2001, the terminating Party will bill the originating Party a rate of $.0015 per minute of use (MOU) for ISP-bound Traffic delivered to the terminating Party.

9.4.7.4 Subject to Section 9.4.7.8.1 below, to the extent that this Agreement remains in effect, beginning on December 14, 2001, and ending on June 13, 2003, the terminating Party will bill the originating Party a rate of $.0010 per MOU for ISP-bound Traffic delivered to the terminating Party.

9.4.7.5 To the extent that this Agreement remains in effect, beginning on June 14, 2003 the terminating Party will bill the originating Party a rate of $.0007 per MOU for ISP-bound Traffic delivered to the terminating Party.

9.4.7.6 Notwithstanding anything to the contrary in this Agreement, the volume of ISP-bound traffic for which one Party may bill the other shall be capped as follows:

9.4.7.6.1 Subject to Section 9.4.7.8.1 below, for ISP-bound Traffic exchanged during the year 2001, and to the extent this Agreement remains in effect during that year, compensation at the rates set out above shall be billed by the terminating Party to the originating Party on ISP-bound Traffic minutes only up to a ceiling equal to, on an annualized basis, the number of ISP-bound Traffic minutes which the terminating Party terminated from the originating Party during the first quarter of 2001, plus a ten percent growth factor.

9.4.7.6.2 For ISP-bound Traffic exchanged during the year 2002 and to the extent this Agreement remains in effect during that year, compensation at the rates set out above shall be billed by the terminating Party to the originating Party on ISP-bound Traffic minutes only up to a ceiling equal to the number of ISP-bound Traffic minutes for which the terminating Party was entitled to compensation in 2001, plus a ten percent growth factor.

9.4.7.6.3 For ISP-bound Traffic exchanged during the year 2003 and beyond, and to the extent this Agreement remains in effect during those years, compensation at the rates set out above shall be billed by the terminating Party to the originating Party only on ISP-bound Traffic minutes up to a ceiling equal to the year 2002 ceiling.

9.4.7.7 If an authoritative body with appropriate jurisdiction determines that any portion of the ISP Remand Order is unlawful or invalid, or otherwise modifies the ISP Remand Order, the Parties shall amend this Agreement to incorporate the ruling of such authoritative body.

9.4.7.8 BellSouth shall offer to exchange both Local Traffic and ISP-bound Traffic with LECs, CLECs, and CMRS providers, subject to the rate caps in the ISP Remand Order. If, in the future, BellSouth chooses not to offer to exchange both Local Traffic and ISP-bound Traffic with LECs, CLECs, and CMRS providers, subject to the rate caps in the ISP Remand Order, then the rate for ISP-bound Traffic termination shall be the rate for reciprocal compensation for Local Traffic as set forth in Attachment 1 of this Agreement. If the Parties are unable to agree on whether BellSouth is offering to exchange traffic as described in this Subsection 9.4.7, they shall invoke the dispute resolution procedures in Part A of this Agreement.

9.4.7.8.1 Notwithstanding anything to the contrary in this Agreement, the Parties agree that the Intercarrier Compensation provisions set forth herein shall be effective prospectively only. The Parties shall not true up any amounts paid or not paid for intercarrier compensation for ISP-bound Traffic prior to March 1, 2002.

9.4.7.9 ISP-bound Traffic shall be subject to the trunking requirements set forth in Section 2 of this Attachment.

9.4.8 The Parties shall implement the following business rules to govern future reciprocal/inter-carrier compensation billing and dispute resolution processes in addition to, and not in lieu of, the business rules set forth elsewhere in this Agreement.

9.4.8.1 By June 30, 2002, the Parties will exchange the necessary data at a sufficient level of detail to permit BellSouth to validate the terminating usage amounts recorded and billed by MCIm and to permit MCIm to validate the BellSouth originating usage measurement audit system. The Parties

agree to correct any noted deficiencies as a result of this validation process.

9.4.8.1.1 Once validated, the connectivity billings by MCIm will be based on MCIm's switch usage measurements, and BellSouth will not withhold intercarrier compensation based on usage disputes where the variance between MCIm's billed usage and BellSouth's recorded originating usage is not greater than 1.5%.

9.4.8.1.2 Where the usage variance is greater than 1.5%, BellSouth may withhold payment for the disputed minutes of use so long as BellSouth supplies to MCIm, along with its dispute notification, its usage data at a sufficient level of detail to enable comparisons of usage data with MCIm. Any inter-carrier compensation amounts in dispute and withheld by BellSouth will be quantified and provided to MCIm in BellSouth's dispute notification letter. The Parties will use their best efforts to resolve any disputes involving the withholding of inter-carrier compensation within 45 days of BellSouth's dispute notification letter. If the Parties are unable to resolve the dispute within 45 days, the dispute will be resolved in accordance with Section 22 of the General Terms and Conditions of this Agreement.

9.4.8.1.3 The Parties will exchange data and information by July 31, 2002, in order to come to an agreement on the data sources and a methodology for identifying the Local Traffic originating from MCIm's UNE-P customers that terminate to BellSouth for purposes of including that originating traffic in the calculation of the 3:1 ratio described in Section 9.4.7.1 for connectivity billing purposes.

9.4.8.2 By July 31, 2002, the Parties will exchange the necessary data to permit MCIm to validate the processes and systems by which BellSouth calculates its quarterly Percentage Local Usage (PLU). The Parties will correct any noted deficiencies as a result of this validation process. Once validated, MCIm will apply the BellSouth provided quarterly PLU to MCIm's terminating usage measurements to determine the amount of minutes of use of Local Traffic, ISP-bound Traffic and IntraLATA Toll Traffic to be billed to BellSouth.

9.5 Compensation for IntraLATA Toll Calls and intraLATA Toll Free Service Calls

9.5.1 When, acting as an intraLATA toll carrier, MCIm delivers an MCIm end user-originated intraLATA toll call to BellSouth for termination to a BellSouth end user, MCIm shall compensate BellSouth at BellSouth's Commission filed and effective intrastate Switched Access tariff rate. When, acting as an intraLATA toll carrier, BellSouth delivers a BellSouth end user-originated intraLATA toll call to MCIm for termination to a MCIm end user, BellSouth shall compensate MCIm at at the interstate rate levels established in the FCC's Seventh Report and Order, released April 27, 2001, establishing benchmarks for CLEC interstate access rates in CC Docket No. 96-262, and will reduce such rates over time as prescribed by that FCC Order. When a third party acts as an intraLATA toll carrier, the Parties shall charge such intraLATA toll carrier, pursuant to Section 9.8 of this Attachment. Where the originating Party is not the toll carrier for the call, such call shall be delivered to the other Party using GR-394.

9.5.2 When a Party's customer originates an intraLATA Toll Free call, that Party shall charge the appropriate Toll Free carrier originating access and data base query charges in accordance with its Commission filed and effective Switched Access tariff. No charges for transport and termination of Local Traffic shall apply to such calls. Appropriate records shall be provided in the standard EMI format.

9.6 Determination of Jurisdiction.

9.6.1 The Parties will use the calling party number (CPN) to determine the jurisdiction of billed traffic. If the jurisdiction of traffic cannot be determined based on the CPN, the Parties will jointly exchange industry standard jurisdictional factors, such as PIU and PLU as established pursuant to Section 21 of Part A of this Agreement.

9.7 Compensation for the Termination of Local Transit Traffic.

9.7.1 Transit Traffic Service. Rates for transiting local transit traffic shall be as set forth in Attachment 1 of this Agreement. Wireless Type 1 traffic shall not be treated as transit traffic from a routing or billing perspective. Wireless Type 2A traffic shall not be treated as transit traffic from a routing or billing perspective until BellSouth and the Wireless carrier have the capability to properly meet-point-bill in

accordance with MECAB guidelines. BellSouth shall either pass on to the wireless carrier the reciprocal compensation payments received from MCIm or indemnify MCIm as to any claim a wireless carrier may raise concerning reciprocal compensation payments MCIm makes to BellSouth.

9.7.2 The Parties agree to deliver transit traffic to the terminating carrier; provided, however, that the originating Party is solely responsible for negotiating and executing any appropriate contractual agreements with the terminating carrier for the receipt of this traffic through the transiting Party's network. The transiting Party will not be liable for any compensation to the terminating carrier or to the originating Party. The Parties shall, however, provide each other with any available information necessary to measure and bill for such traffic.

9.8 Compensation for Switched Access Traffic.

9.8.1 The Parties will establish Meet Point Billing arrangements in order to provide Switched Access Services to third party intraLATA and interLATA toll carriers via BellSouth's Access Tandem Switches, in accordance with MECAB guidelines.

9.8.2 For interstate and intrastate traffic, the Parties will charge third party toll carriers in accordance with each Party's respective Commission or FCC filed and effective Switched Access tariff.

9.8.3 Billing to third party toll carriers for Switched Access Services jointly provided by the Parties via Meet Point Billing arrangements, will be done by the multiple bill/multiple tariff method. As described in MECAB, each Party will render a bill in accordance with its own tariff for that portion of the service it provides. For the purposes of this Agreement, MCIm is the Initial Billing Company ("IBC") and BellSouth is the Subsequent Billing Company ("SBC").

9.8.4 The Parties will maintain provisions in the National Exchange Carrier Association ("NECA") Tariff No. 4, or any successor tariff, sufficient to reflect this Meet Point Billing arrangement, including Billing Interconnection Percentages ("BIPs").

9.8.5 Information will be exchanged in the Exchange Message Interface ("EMI") format, via a method currently used by the Parties, or by some other method mutually agreeable. When the Parties use CONNECT:Direct, the recording Party agrees to use its best efforts to

provide to the IBC, at no charge, the switched access detailed usage data in 1101XX records within 48 hours, but in no event more than 60 days, after the recording date. The IBC will provide the switched access summary usage data in 1150XX records to the SBC and all other subsequent billing third parties within 10 days of rendering the initial bill to the third party toll carrier. Each Party will notify the other when it is not feasible to meet these requirements.

9.8.6 Errors may be discovered by MCIm, or BellSouth. Each Party agrees to provide the other Party with notification of any discovered errors within ten business days after discovery.

9.8.7 In the event of a loss or damage of data, the Parties agree to cooperate to reconstruct the lost or damaged data within 48 hours after notification and if such reconstruction is not possible, to accept a reasonable estimate of the lost data. This estimate may be based on several methodologies, such as an estimate of the volume of lost messages and associated revenue based on information available concerning the average revenue per minute for the average interstate or intrastate call or based upon at least three, but no more than 12 months of prior usage data, if available. Each Party will retain for a minimum period of ninety (90) days, access message detail sufficient to recreate any data which is lost or damaged by their company or any third party involved in processing or transporting data.

9.8.8 BellSouth shall provide MCIm, via the internet, with updates of the billing name, billing address, and Carrier Identification Codes (CICs) of all third party toll carriers originating or terminating traffic at BellSouth's Access Tandems in order to comply with the Meet Point Billing notification process as outlined in MECAB.

9.8.9 If category 1101XX records are not submitted by the SBC in a timely fashion, the Parties agree to cooperate to estimate the billing to the IXCs in accordance with the IBC's Switched Access tariffs for estimating usage. The SBC will be liable to the IBC for the amount of lost revenue, as determined by the estimate. If there is a disagreement as to the estimate, the Parties shall negotiate a settlement.

9.8.10 If category 1150XX records are not submitted by the IBC in a timely fashion, the Parties agree to cooperate to estimate the billing to the third party toll carriers in accordance with the SBC's Switched Access tariffs for estimating usage. The IBC will be liable to the SBC for the amount of lost revenue, as determined by the estimate. If there

is a disagreement as to the estimate, the Parties shall negotiate a settlement.

9.9 To the extent applicable, the following rate elements will be billed in accordance with each Party's respective switched access tariffs:

9.9.1 Interstate Switched Access. Terminating to or originating from MCIm Customers

Rate Element	Company
Carrier Common Line	MCIm
Local Switching	MCIm
Interconnection Charge	MCIm
Common Trunk Port	MCIm
Tandem Transport Fixed	50% MCIm / 50% BellSouth
Tandem Transport Variable	Based on negotiated BIP*
Tandem Switching	BellSouth
Common MUX	BellSouth
Entrance Facility	BellSouth
Dedicated Tandem Transport	BellSouth
800 Database Query	LEC that performs the query

9.9.2 Intrastate Switched Access. Terminating to or originating from MCIm Customers

Rate Element	Company
Carrier Common Line	MCIm
Local Switching	MCIm
Interconnection Charge	MCIm
Common Trunk Port	MCIm
Tandem Transport Fixed	50% MCIm / 50% BellSouth
Tandem Transport Variable	Based on negotiated BIP*
Tandem Switching	BellSouth
Common MUX	BellSouth
Entrance Facility	BellSouth
Dedicated Tandem Transport	BellSouth
800 Database Query	LEC that performs the query

* BIPs previously negotiated have been entered into NECA FCC Tariff No. 4. Future BIPs will be negotiated and mutually agreed to by both Parties and entered into NECA FCC Tariff No. 4.

9.10 Compensation for the Termination of Traffic to Ported Numbers.

9.10.1 The Parties agree that, under INP, terminating compensation for calls to ported numbers should be received by each customer's chosen local service provider as if each call to a customer had been originally addressed by the calling party to a telephone number bearing an NPA-NXX directly assigned to the customer's chosen local service provider.

9.11 When MCIm orders or uses BellSouth unbundled Network Elements pursuant to Attachment 3 of this Agreement, those elements ordered or used shall be considered part of MCIm's network for the purpose of calculating reciprocal compensation and switched access charges, subject to this Section 9.11. Where MCIm utilizes BellSouth's unbundled switching, for local transit traffic originated by a third party and terminated to an MCIm end user, MCIm shall be entitled to reciprocal compensation from the third party originating such local transit traffic. Notwithstanding the foregoing, MCIm is not entitled to reciprocal compensation from BellSouth for termination of BellSouth originated Local Traffic in instances where MCIm utilizes Bellsouth's unbundled switching and where BellSouth does not bill MCIm for the terminating usage on that unbundled switching.

TABLE OF CONTENTS

ATTACHMENT 5
COLLOCATION

Section 1.	Introduction	2
Section 2.	Physical Collocation	2
Section 3.	Adjacent Collocation	12
Section 4.	Shared/Common Caged Collocation	13
Section 5.	Cageless Collocation	14
Section 6.	Virtual Collocation	15
Section 7.	Additional Requirements	16
Section 8.	Insurance	33
Section 9	Technical References	33

Exhibit A	Adjacent Collocation
Exhibit B	
Exhibit C	
Exhibit D	
Exhibit E	
Exhibit F	

COLLOCATION

Section 1. Introduction

1.1 This Attachment contains the requirements for Collocation. As set forth below, BellSouth must provide physical collocation within its premises on a first come, first served basis at the rates set forth in Attachment 1 of this Agreement. BellSouth premises include BellSouth's central offices and serving wire centers, as well as all buildings or similar structures owned or leased by BellSouth that house its network facilities, and all structures that house BellSouth facilities on public rights-of-way, including, but not limited to, vaults containing loop concentrators or similar structures ("Premises"). If MCIm requests collocation at Premises other than a BellSouth central office or serving wire center, the Parties shall negotiate terms and conditions, including rates, at the time of the request. At MCIm's option, if space is exhausted, collocation may be virtual or, where technically feasible, adjacent. Where space is available, MCIm may collocate using the following options: caged, shared caged or cageless collocation. BellSouth also shall provide physical or virtual collocation to MCIm, using any other technically feasible method, under terms and conditions to be negotiated by the parties upon request by MCIm. MCIm is entitled to a presumption that a method is technically feasible if any LEC has deployed such collocation arrangement in any incumbent LEC premises. Once physical collocation space is assigned to and occupied by MCIm, BellSouth shall not unreasonably reassign MCIm to other space, and in any event, BellSouth shall do so in a nondiscriminatory manner.

1.2 Use of Space. MCIm shall use the Collocation Space for the purposes of installing, maintaining and operating MCIm's equipment (to include testing and monitoring equipment) necessary for interconnection with BellSouth services and facilities or for accessing BellSouth unbundled network elements for the provision of telecommunications services.

Section 2. Physical Collocation

2.1 General Requirements

2.1.1 Space Allocation. BellSouth shall act as a neutral property owner and manager and assign collocation space in a nondiscriminatory manner. If space is available or can be made available pursuant to applicable laws or regulations, BellSouth agrees to provide physical collocation space on its Premises, as requested by MCIm, for MCIm's interconnection and access to Network Elements. If MCIm has previously requested and received a Space Availability Report for the Premises pursuant to subsection 2.1.5.3, MCIm may submit up to three (3) space preferences on their application identifying specific space identification numbers as referenced on the Space Availability Report. In the event that BellSouth can not accommodate MCIm 's preference(s), BellSouth shall respond with a space allocation that MCIm may elect to accept, or may cancel its application and submit another application requesting additional preferences, which will be treated as a new application and an application fee will apply.

2.1.1.1 BellSouth must assign collocation space to MCIm in a just, reasonable, and nondiscriminatory manner. At a minimum, BellSouth's space assignment policies and practices must meet the following principles:

2.1.1.1.1 BellSouth's space assignment policies and practices must not materially increase MCIm's collocation costs.

2.1.1.1.2 BellSouth's space assignment policies and practices must not materially delay MCIm's occupation and use of BellSouth's premises.

2.1.1.1.3 BellSouth must not assign physical collocation space that will impair the quality of service or impose other limitations on the service MCIm wishes to offer.

2.1.1.1.4 BellSouth's space assignment policies and practices must not reduce unreasonably the total space available for physical collocation or preclude unreasonably physical collocation within BellSouth's premises.

2.1.1.2 If BellSouth assigns unconditioned space when conditioned space is available, BellSouth will show that operational constraints, unrelated to BellSouth or any of its affiliates' or subsidiaries' competitive concerns, require that MCIm be assigned the unconditioned space. Space shall

not be available for collocation if it is: (a) physically occupied by non-obsolete equipment; (b) assigned to another collocator in accordance with Commission rules; (c) used to provide physical access to occupied space; (d) used to enable technicians to work on equipment located within occupied space; (e) properly reserved for future use, either by BellSouth or by another carrier; or (f) essential for the administration and proper functioning of BellSouth's Premises. MCIm may challenge a space assignment with the Commission if MCIm believes the assignment is unjust, unreasonable, or discriminatory, violates FCC rules, or violates any additional consistent rules the Commission has established. The amount of space requested by MCIm may include an amount sufficient to accommodate its needs for up to 24 months, and such space reservation shall be at Parity.

2.1.1.3 Application Process

Application for Space. MCIm shall submit an application document when MCIm or MCIm's Guest(s), as defined in subsection 4.1, desires to request or modify the use of the Collocation Space.

2.1.1.4 Initial Application. For MCIm or MCIm's Guest(s) initial equipment placement, MCIm shall submit to BellSouth a complete and accurate Physical Expanded Application Inquiry document (Bona Fide Application).The Application Fee set forth in Attachment 1 of this Agreement shall be billed upon BellSouth's determination that space is available. MCIm may include in the Bona Fide Application all equipment that it plans to install in the Collocation Space, but shall not be required to install initially all such equipment upon acceptance of the Collocation Space.

2.1.1.5 Application Response. BellSouth will respond to an application ("Space Availability Response") within ten (10) calendar days as to whether space is available or not available within a BellSouth Premises. BellSouth will also respond as to whether the Application is Bona Fide and if it is not Bona Fide the items necessary to cause the Application to become Bona Fide. BellSouth will provide a written response ("Application Response") within fifteen (15) calendar days of receipt of a Bona Fide application, provided MCIm has given BellSouth a forecast of MCIm's collocation needs. Such forecast shall be given for a two year period (i.e., current year plus one). For Collocation space requirements involving standardized space preparation

charges, MCIm shall submit a collocation forecast at least ten (10 days in advance of the date of Collocation space application, and, for Collocation space requirements involving individual case basis space preparation charges, MCIm shall submit a collocation forecast at least twenty (20) days in advance of the Collocation space application.

The Application Response will include, at a minimum, the configuration of the space, the Cable Installation Fee, Cable Records Fee, and a firm price quote of the space preparation fees. If the amount of space requested is not available, BellSouth will notify MCIm of the amount of space that is available and no Application Fee shall apply. When BellSouth's response includes an amount of space less than that requested by MCIm, or differently configured, MCIm must resubmit its Application to reflect the actual space available.

2.1.1.6 Bona Fide Firm Order. MCIm shall indicate its intent to proceed with equipment installation in a BellSouth Central Office by submitting a Bona Fide Firm Order to BellSouth. All Bona Fide Firm Orders must be submitted on the Expanded Interconnection Bona Fide Firm Order document (BSTEI-1P-F) indicating acceptance of the written Application Response provided by BellSouth ("Bona Fide Firm Order"). BellSouth shall bill MCIm for the appropriate fees set forth in Attachment 1 of this Agreement upon BellSouth's receipt of the Bona Fide Firm Order. The Bona Fide Firm Order must be received by BellSouth no later than thirty (30) days after BellSouth's response to MCIm's Application/Inquiry. If, at any time, BellSouth needs to reevaluate MCIm's Bona Fide Application as a result of changes requested by MCIm to MCIm's original Application, then BellSouth will charge MCIm a fee as follows:

2.1.1.6.1 Where the Application Modification does not require assessment for provisioning or construction work by BellSouth, no application fee will be required.

2.1.1.6.2 Where the modification requested has limited effect (i.e., requires an assessment but no capital expenditure by BellSouth) the fee shall be the Subsequent Application Fee as set forth in Attachment 1.

2.1.1.6.3 .Where the modification requested includes major changes (i.e., requiring capital expenditure by

BellSouth), BellSouth may require MCIm to resubmit a new Application with an Application Fee.

2.1.1.7 Alarm and Monitoring. BellSouth shall place environmental alarms in the Central Office for the protection of BellSouth equipment and facilities. If desired by MCIm, MCIm shall be responsible for placement, monitoring and removal of environmental and equipment alarms used to service MCIm's Collocation Space. Both parties shall use best efforts to notify the other of any verified environmental condition (e.g., temperature extremes or excess humidity, etc.) known to that party.

2.1.1.8 Cancellation. If, at anytime, MCIm cancels its order for the Collocation Space(s), MCIm will reimburse BellSouth for any expenses incurred up to the date that written notice of the cancellation is received. In no event will the level of reimbursement under this paragraph exceed the maximum amount MCIm would have otherwise paid for work undertaken by BellSouth if no cancellation of the order had occurred.

2.1.1.9 Space Reclamation. In the event of space exhaust within a Central Office Premises, BellSouth may include in its documentation for the Petition for Waiver filing any unoccupied space in the Central Office Premises. MCIm will be responsible for any justification of unoccupied space within its space, if such justification is required by the appropriate state Commission. BellSouth shall comply with 47 CFR 51.321(f) and any applicable Commission rules or orders.

2.1.1.10 Termination. Except where otherwise agreed to by the Parties, MCIm may terminate occupancy in a particular Collocation Space upon thirty (30) days prior written notice to BellSouth by Subsequent Application, for which no fees shall apply. Upon termination of such occupancy, MCIm at its expense shall remove its equipment and other property from the Collocation Space. MCIm shall have thirty (30) days from the termination date to complete such removal, including the removal of all equipment and facilities of MCIm's Guests; provided, however, that MCIm shall continue payment of monthly fees to BellSouth until such date as MCIm has fully vacated the Collocation Space. Should MCIm fail to vacate the Collocation Space within thirty (30) days from the termination date, BellSouth shall have the right to remove the equipment and other property of

MCIm at MCIm's expense and with no liability for damage or injury to MCIm's property unless caused by the gross negligence or intentional misconduct of BellSouth. Upon termination of occupancy, MCIm shall surrender the Collocation Space to BellSouth in the same condition as when first occupied by MCIm except for ordinary wear and tear. MCIm shall be responsible for the cost of removing any enclosure, together with all support structures (e.g., racking, conduits), of an Adjacent Collocation arrangement at the termination of occupancy and restoring the grounds to their original condition.

2.1.2 BellSouth will allow MCIm to collocate in BellSouth's Premises, without requiring the construction of a cage, or similar structure or enclosure. BellSouth may segregate collocation space and require separate entrances in accordance with FCC rules. BellSouth may require, for either legitimate security concerns or operational constraints unrelated to BellSouth's or any of it's affiliates' or subsidiaries' competitive concerns, MCIm's collocation space to be separate from space housing BellSouth equipment if the separated space is:

1. available in the same or a shorter time frame as non-separated space;

2.provided at a cost not materially higher than the cost of non-separated space; and

3.comparable, from a technical and engineering standpoint, to non-separated space.

BellSouth may require MCIm to use a separate entrance to obtain access to its assigned collocation space, where a separate entrance already existsthat provides access to the collocation space at issue or where construction of such an entrance is technically feasible and will neither artificially delay collocation provisioning nor materially increase MCIm's costs. BellSouth may construct or require the construction of separate entrances only where legitimate security concerns, or operational constraints unrelated to BellSouth's or any of its affiliates' or subsidiaries'competitive concerns warrant them. Where BellSouth assigns separate space for collocation or requires MCIm to access their collocation space through a separate entrance, BellSouth's affiliates and subsidiaries and their employees and contractors shall likewise be subject to such restrictions. MCIm may challenge a separate space assignment or a separate entrance requirement

with the Commission if MCIm believes the assignment or requirement is unjust, unreasonable, discriminatory, violates the FCC rules, or violates any additional, consistent rules the Commission has established. BellSouth must permit MCIm to have direct access to MCIm's equipment, including demarcation points, twenty-four (24) hours per day, seven (7) days per week, pursuant to safety requirements in subsection 7.3 of this Attachment.

2.1.2.1 If MCIm changes locks for the protection and security of its equipment, it will provide BellSouth with duplicate keys.

2.1.3 BellSouth shall make collocation space available in single bay increments, meaning that MCIm can purchase space in increments small enough to collocate a single rack, or bay, of equipment.

2.1.4 Demarcation Point. BellSouth shall designate the point(s) of demarcation between MCIm's collocated equipment and BellSouth's equipment. BellSouth shall use its best efforts to designate the closest Technically Feasible demarcation points that are available. BellSouth shall provide cross connects, from the interconnection point(s) designated by MCIm to the demarcation point(s) designated by BellSouth. No cross connect charges shall apply at the time MCIm's certified vendor provides the necessary connection(s) from its collocation space to such demarcation point(s) ("TIE cable/pairs"). However, cross connect charges, as set forth in Attachment 1, will apply when BellSouth, upon receipt of an order from MCIm for BellSouth services and/or interconnection, connects such services from BellSouth's termination to the demarcation point**.** Each party will be responsible for maintenance and operation of all equipment/facilities on its side of the demarcation point. For circuits and loops that BellSouth normally terminates on a BellSouth conventional distributing frame, the demarcation point shall be a common block on the BellSouth designated conventional distributing frame. MCIm shall be responsible for providing, and MCIm's BellSouth certified vendor shall be responsible for installing and properly labeling/stenciling, the common block, and necessary cabling. For DS-1 and DS-3 cross connections, the demarcation point shall be on a DSX frame. For fiber cross connections, the demarcation point shall be on an LGX frame. MCIm or its agent must perform all required maintenance to equipment/facilities on its side of the demarcation point, and may self-provision cross-connects that may be required within the collocation space to activate service requests. As used

in this Section, "conventional distributing frame" means an MDF or IDF normally used by BellSouth to terminate its circuits.

2.1.5 Reporting

2.1.5.1 Space Availability Report. Upon request from MCIm, BellSouth must submit a written report ("Space Availability Report") describing in detail the space that is available for collocation at the Premises requested, the number of collocators present at the Premises, any modifications in the use of the space since the last report for the Premises requested and the measures BellSouth is taking to make additional space available for collocation arrangements. A Space Availability Report does not reserve space at the Premises.

2.1.5.2 The request from MCIm for a Space Availability Report must be written and must include the Premises street address located in the Local Exchange Routing Guide (LERG), and Common Language Location Identification (CLLI) code of the Premises CLLI code is located in the National Exchange Carriers Association (NECA) Tariff FCC No. 4.

2.1.5.3 BellSouth will respond to a request for a Space Availability Report for a particular Premises within ten (10) calendar days of receipt of such request. If BellSouth cannot meet the ten (10) calendar day response time, and the Parties cannot agree on an alternative interval, BellSouth may seek a waiver from the Commission for an extended interval.

2.1.6 Public Notification. BellSouth must maintain a publicly available document, posted for viewing on BellSouth's publicly available internet site, indicating all Premises that are full, and must update such a document within ten (10) days of the date at which a Premises runs out of physical collocation space. BellSouth will also post a document on its Interconnection Services website that contains a general notice where space has become available in a Premises previously on the space exhaust list. This notice will be posted within ten (10) days of BellSouth's notification to the state Commission of its intent to withdraw a previously filed Petition for Waiver under 47 U.S.C. Sec. 252(c)(6). BellSouth shall allocate said available space pursuant to the waiting list referenced in subsection 2.5.

2.1.7 BellSouth will remove obsolete unused equipment from its Premises upon reasonable request by MCIm.

2.2 Denial of Space.

2.2.1 Filing of Petition for Waiver. Upon Denial of the Application, BellSouth will timely file a petition with the state Commission pursuant to 47 U.S.C. 251(c)(6). BellSouth shall submit to the state Commission, subject to any protective order as the state Commission may deem necessary, detailed floor plans or diagrams of any Premises where BellSouth claims that physical collocation is not practical because of space limitations. BellSouth will comply with the rules and regulations of the Commission for filing of petitions for waiver. If it is MCIm's request for space that leads BellSouth to file a request for waiver, BellSouth will provide to MCIm, upon request from MCIm, a copy of the floor plans and diagrams filed with the Commission, subject to any nondisclosure protections the Commission deems appropriate. BellSouth will provide such a copy within five (5) business days of MCIm's request or the filing with the state Commission, whichever is later.

2.2.2 Denial of Application. After notifying MCIm that BellSouth has no available space in the requested Premises ("Denial of Application"), BellSouth will allow MCIm, upon request, to tour the entire Premises within ten (10) days of such Denial of Application. In order to schedule said tour within ten (10) days, the request for a tour of the Premises must be received, by BellSouth, within five (5) days of the Denial of Application. Any request received by BellSouth later than five (5) days after MCIm's receipt of BellSouth's Denial of Application will be fulfilled within five (5) days of the request.

2.2.3 Waiting List. In accordance with Applicable Law, BellSouth will maintain a waiting list of requesting carriers who have either received a Denial of Application or, where it is publicly known that the Premises is out of space, have submitted a Letter of Intent to collocate. BellSouth will notify the telecommunications carriers on the waiting list that can be accommodated by the amount of space that becomes available according to the position of the telecommunications carriers on said waiting list. When space becomes available, MCIm must submit an updated, complete, and correct Application to BellSouth within thirty (30) calendar days of such notification. If MCIm has originally requested caged collocation space and cageless collocation space becomes available, MCIm may refuse such space and notify BellSouth in writing within that time that MCIm wants to maintain its place on the

waiting list without accepting such space. MCIm may accept an amount of space less than its original request by submitting an Application as set forth above, and upon request, may maintain its position on the waiting list for the remaining space that was initially requested. If MCIm does not submit such an Application or notify BellSouth in writing as described above, BellSouth will offer such space to the next CLEC on the waiting list and remove MCIm from the waiting list. Upon request BellSouth will advise MCIm as to its position on the list. BellSouth also shall give notice to the Commission that space is about to become available, and BellSouth shall post such information on BellSouth's public web site. BellSouth shall make space available to telecommunications carriers according to their order on the waiting list.

2.2.4 Virtual Collocation Transition. In the event physical collocation space was previously denied at a location due to technical reasons or space limitations, and that physical collocation space has subsequently become available, MCIm may transition its virtual collocation arrangements to physical collocation arrangements. In the event that BellSouth knows when additional space for physical collocation may become available at the location requested by MCIm, such information will be provided to MCIm in BellSouth's written denial of physical collocation. To the extent that (i) physical collocation space becomes available to MCIm within 180 days of BellSouth's written denial of MCIm request for physical collocation, and (ii) MCIm was not informed in the written denial that physical collocation space would become available within such 180 days, then MCIm may transition its virtual collocation arrangement to a physical collocation arrangement and will receive a credit for any nonrecurring charges previously paid for such virtual collocation. MCIm must arrange with a BellSouth certified vendor for the relocation of equipment from its virtual collocation space to its physical collocation space and will bear the cost of such relocation. If MCIm requests a conversion from virtual collocation to physical collocation, the response times described in subsection 2.1.1.3 of this Attachment shall apply.

2.2.4.1 BellSouth will authorize the conversion of virtual collocation arrangements to physical collocation arrangements without requiring the relocation of the virtual arrangement where there are no extenuating circumstances or technical reasons that would cause the arrangement to become a safety hazard within the Premises or otherwise being in conformance with the terms and conditions of this Attachment and where (1) there is no change to the arrangement; and (2) the conversion of the virtual

arrangement would not cause the arrangement to be located in the area of the Premises reserved for BellSouth's forecast of future growth; and (3) due to the location of the virtual collocation arrangement, the conversion of said arrangement to a physical arrangement would not impact BellSouth's ability to secure its own facilities. Notwithstanding the foregoing, if the BellSouth Premises is at or nearing space exhaust, BellSouth may authorize the conversion of the virtual arrangement to a physical arrangement even though BellSouth could no longer secure its own facilities

Section 3. Adjacent Collocation

3.1 Adjacent Collocation. BellSouth will provide adjacent collocation arrangements ("Adjacent Arrangement") where space within the Premises is legitimately exhausted, subject to technical feasibility, where the Adjacent Arrangement does not interfere with access to existing or planned structures or facilities on the Premises and where permitted by zoning and other applicable state and local regulations. The Adjacent Arrangement shall be constructed or procured by MCIm and in conformance with BellSouth's reasonable safety and maintenance requirements. Further, MCIm shall construct, procure, maintain and operate said Adjacent Arrangement(s) pursuant to all of the terms and conditions set forth in this Attachment. Rates, which are interim subject to true up, shall be as set forth in Attachment 1.

3.2 Should MCIm elect such option, MCIm must arrange with a BellSouth certified contractor to construct an Adjacent Arrangement structure in accordance with BellSouth's reasonable safety and maintenance requirements, which are incorporated by reference and attached as Exhibit A to this Attachment. Should either Party propose any changes to the requirements set forth in Exhibit A, the Parties shall amend this Agreement to incorporate such changes. If the Parties are unable to agree on the proposed changes, the Party opposing the changes shall promptly pursue dispute resolution pursuant to Section 23 of Part A of this Agreement. Where local building codes require enclosure specifications more stringent than BellSouth's standard specifications set forth in Exhibit A, MCIm and MCIm's contractor must comply with local building code requirements. MCIm's contractor shall be responsible for filing and receiving any and all necessary zoning, permits and/or licenses for such construction. MCIm must provide the local BellSouth building contact with two cards, keys or other access device used to enter the locked enclosure. Except in cases of emergency, BellSouth shall not access MCIm's locked enclosure prior to receiving MCIm's permission to enter the enclosure. BST will notify MCIm of any emergency entry into MCIm's enclosure.

3.3 BellSouth may inspect the Adjacent Arrangement(s) following construction and prior to commencement, as defined in subsection 4.1 following, to ensure the design and construction comply with BellSouth's reasonable safety and maintenance requirements. BellSouth may require MCIm, at MCIm's sole cost, to correct any deviations from BellSouth's guidelines and specifications found during such inspection(s), up to and including removal of the Adjacent Arrangement, within five (5) business days of BellSouth's inspection, unless the Parties mutually agree to an alternative time frame. If the nature and gravity of the deviation requires the removal of the entire adjacent arrangement enclosure, the Parties will mutually agree to an alternative timeframe not to exceed thirty (30) business days.

3.4 MCIm shall provide a concrete pad, the structure housing the arrangement, HVAC, lighting, and all facilities that connect the structure (i.e. racking, conduits, etc.) to the BellSouth demarcation point. At MCIm's option, BellSouth shall provide an AC or DC power source and access to physical collocation services and facilities subject to the same nondiscriminatory requirements as applicable to any other physical collocation arrangement. If MCIm requests BellSouth to provide DC power to MCIm's adjacent collocation space, BellSouth shall provide DC power to adjacent collocation sites where technically feasible, as that term has been defined by the FCC.

Section 4. Shared/Common Caged Collocation

4.1 Shared (Subleased) Caged Collocation. MCIm may allow other telecommunications carriers to share MCIm's caged collocation arrangement pursuant to terms and conditions agreed to by MCIm ("Host") and other telecommunications carriers ("Guests") and pursuant to this Section with the following exceptions: (1) where local building code does not allow Shared (Subleased) Caged Collocation and (2) where the BellSouth central office Premises is located within a leased space and BellSouth is prohibited by said lease from offering such an option. MCIm shall notify BellSouth in writing upon execution of any agreement between the Host and its Guest within ten (10) business days of its execution and prior to any Firm Order. Further, such notice shall include the name of the Guest(s) and the term of the agreement, and shall contain a certification by MCIm that said agreement imposes upon the Guest(s) the same terms and conditions, excluding rates, for collocation space as set forth in this Agreement between BellSouth and MCIm.

4.2 MCIm shall be the sole interface and responsible party to BellSouth for the purpose of submitting applications for initial and additional equipment placements of Guest; for assessment of rates and charges

contained within this Attachment; and for the purposes of ensuring that the safety and security requirements of this Attachment are fully complied with by the Guest, its employees and agents. In the event the Host submits a single initial Application that covers both Host and Guest collocation, only one Application Fee will be assessed. If, subsequent to the initial placement of equipment in the collocation space, the Host submits a separate application for Guest collocation, a Subsequent Application Fee, as set forth in Exhibit A, shall apply. Notwithstanding the foregoing, Guest may arrange directly with BellSouth for the provision of the interconnecting facilities between BellSouth and Guest and for the provisions of the services and access to unbundled network elements. Nothing in this Section shall prevent MCIm from paying BellSouth for any charges associated with MCIm's Guests with checks written by such Guests to BellSouth, provided that MCIm remains responsible for such payments.

4.3 MCIm shall require all Guests to agree to limit BellSouth's liability to Guests to the same liability that BellSouth has to MCIm under this Agreement. MCIm shall indemnify and hold harmless BellSouth from any and all claims, actions, causes of action, of whatever kind or nature, asserted by an MCIm Guest against BellSouth, arising out of the presence of MCIm's Guests in the Collocation Space, except for claims, actions, causes of action, of whatever kind or nature arising out of or related to the interconnection between BellSouth and the Guests or BellSouth's provision of access to Unbundled Network Elements to the Guests directly, to the extent that such claims, actions, or causes of action exceed the limitation of liability required by this subsection 4.3.

Section 5. Cageless Collocation

5.1 Except where local building code does not allow cageless collocation, BellSouth shall allow MCIm to collocate MCIm's equipment and facilities in single-bay increments without requiring the construction of a cage or similar structure. BellSouth shall permit MCIm to have direct access to MCIm's equipment and shall not require MCIm to use an intermediate interconnection arrangement in lieu of direct connection to BellSouth's network if technically feasible. Except where MCIm's equipment requires special technical considerations (e.g., special cable racking, isolated ground plane), BellSouth shall assign cageless Collocation Space in conventional equipment rack lineups where feasible. For equipment requiring special technical considerations, MCIm must provide the equipment layout, including spatial dimensions for such equipment pursuant to generic requirements contained in BellCore (Telcordia) GR-63-Core and shall be responsible for constructing all special technical requirements associated with such equipment pursuant to use of a BellSouth certified vendor.

Section 6. Virtual Collocation

Virtual Collocation will be made available according to the terms and conditions described in BellSouth's FCC Tariff No. 1. BellSouth shall provide Virtual Collocation at the rates set forth in Attachment 1 of this Agreement. If there are any inconsistencies between BellSouth's FCC Tariff No. 1 and this Agreement, this Agreement shall control.

6.1 Virtual collocation means MCIm will provide and will lease toBellSouth transmission equipment dedicated to MCIm's use. MCIm will beresponsible for monitoring and controlling MCIm circuits terminating atBellSouth's premises. Once space preparation is complete and upon MCIm's request, BellSouth shall contract with a BellSouth certified vendor toinstall all equipment and facilities in accordance with BellSouth'sguidelines and specifications. MCIm shall be responsible for all costs ofthe vendor's installation in addition to BellSouth's charges foroverseeing and otherwise handling the installation. MCIm shall beresponsible for all engineering associated with the installation and theprovision of all equipment, necessary supplies and related documentation.BellSouth's obligations to install the equipment shall not begin until MCImhas provided all of the above to BellSouth. BellSouth will maintain andrepair such equipment under the same intervals and with the same or better failure rates for performance of similar functions for comparable BellSouth equipment. Maintenance includes the change out of electronic cards provided by MCIm.

6.2 MCIm may purchase the equipment from third parties, and will not be required to purchase the equipment from BellSouth.

6.3 To the extent BellSouth is required to provide virtual collocation outside the central office, BellSouth will provide unbundled transport and sub-loops in accordance with the terms of this agreement.

6.4 BellSouth will make available digital, analog and fiber cross-connects for virtual collocation at the rates contained in Attachment 1.

Section 7. Additional Requirements

7.1 Equipment Type. BellSouth shall permit MCIm to collocate any equipment necessary for interconnection to BellSouth's network or for access to BellSouth's unbundled network elements in the provision of telecommunications services as the term "necessary" is defined by FCC 47 C.F.R. Section 51.323 (b). The primary purpose and function of any equipment collocated in a Premises must be for interconnection to BellSouth's network or for access to BellSouth's unbundled network elements in the provision of telecommunications services.

7.1.1 Whenever BellSouth objects to collocation of equipment by MCIm for the purposes within the scope of Section 251(c)(6) of the Act, BellSouth shall prove to the Commission that the equipment is not ”necessary” for the purpose of obtaining interconnection or access to unbundled network elements in accordance with the FCC’s rules. BellSouth may not object to the collocation of equipment on the grounds that the equipment does not comply with safety or engineering standards that are more stringent than the safety or engineering standards that BellSouth applies to its own equipment. BellSouth may not object to the collocation of equipment on the ground that the equipment fails to comply with National Equipment and Building Specifications performance standards. If BellSouth denies collocation of MCIm’s equipment, citing safety standards, BellSouth must provide to MCIm within five (5) business days of the denial a list of all equipment that BellSouth locates within the Premises in question, together with an affidavit attesting that all of that equipment meets or exceeds the safety standard that BellSouth contends MCIm's equipment fails to meet. This affidavit must set forth in detail: the exact safety requirement that MCIm’s equipment does not satisfy; BellSouth’s basis for concluding that MCIm’s equipment does not meet this safety requirement; and BellSouth’s basis for concluding why collocation of equipment not meeting this safety requirement would compromise network safety.

7.1.2 The Parties agree that their equipment must at a minimum, meet the BellCore (Telcordia) Network Equipment Building Systems (NEBS) General Equipment Requirements, Criteria Level 1 requirements, as outlined in the BellCore (Telcordia) Special Report SR-3580, Issue 1 and equipment design spatial requirements per GR-63-CORE, Section 2, requirement numbers 3, 23, 25 and 34. Cageless collocation arrangements must additionally meet GR-63-CORE, Section 2, requirement numbers 1, 2, 5, 6, 15, 17, 19, 20, 21 and 26.

7.1.3 Subject to requirements of this Attachment, MCIm may place or install in or on the Collocation Space such additional personal property and facilities, including storage for spare equipment, as it deems desirable for the conduct of business, provided that such property and facilities do not violate floor loading requirements, impose or could impose or contain or could contain unreasonable environmental conditions or hazards. Personal property, facilities and equipment placed by MCIm in the Collocation Space shall not become a part of the Collocation Space, even if nailed, screwed or otherwise fastened to the Collocation Space, but shall retain their status as personalty and may be removed by MCIm at any time.

Any damage caused to the Collocation Space by MCIm's employees, agents, or representatives during the removal of such property shall be promptly repaired by MCIm at its expense.

7.2 Connections Between Carriers. Subject to subsection 2.1.1 of this Attachment, MCIm may directly connect to other Collocators within the designated BellSouth Premise (including to its other virtual or physical collocated arrangements) through facilities owned by MCIm, another Collocator or through BellSouth facilities owned by BellSouth designated by MCIm, at MCIm's option. Such connections to other carriers may be made using either optical or electrical facilities. MCIm may deploy such optical or electrical connections directly between its own facilities and the facilities of other Collocator(s) without being routed through BellSouth equipment.

If MCIm requests a co-Carrier cross-connect after the initial installation, MCIm must submit an application with a Co-Carrier Cross Connect Subsequent Application Fee at the rates set forth in Attachment 1 of this Agreement. BellSouth will use best efforts to assess the cost, pursuant to applicable law, of this type of request within 6-9 months of execution of this Agreement. If MCIm elects to have BellSouth provide the co-Carrier cross-connect, BellSouth shall place the cross-connect pursuant to a cross-connect order and no application or application fee will be required. In such cases, cross-connect charges will apply, and cable support structure charges will not apply. If MCIm elects to use its own facilities, MCIm must use a certified vendor to place the co-Carrier cross connect, except in cases where the MCIm equipment and the equipment of the other Collocator are located within contiguous collocation spaces. In cases where MCIm's equipment and the equipment of the other Collocator are located in contiguous collocation spaces, MCIm itself will have the option to deploy the co-Carrier cross connects between the sets of equipment. Where cable support structure exists for such connection there will be a recurring charge per linear foot of support structure used. When cable support structures do not exist and must be constructed a pro-rated non-recurring charge for the individual case will be assessed, and no recurring charges will apply for MCIm's use of the constructed cable rack. BellSouth shall complete cable rack construction at Parity. The term "co-Carrier" as used in this Section is not intended to imply the existence of a joint venture or partnership between collocating carriers.

7.2.1 MCIm may choose to lease unbundled transport from BellSouth, or from a third carrier, rather than construct facilities to the BellSouth central office or facility where equipment will be collocated.

7.2.2 Charges for all services provided pursuant to this Attachment

shall be as set forth in Attachment 1.

7.3 Security

7.3.1 The security and safety requirements set forth in this Section are as stringent as the security requirements BellSouth maintains at its own Premises either for their own employees or for authorized contractors. BellSouth employees, BellSouth certified vendors and authorized employees, authorized Guests, pursuant to subsection 4.1, preceding, or authorized agents of MCIm will be permitted in the BellSouth Premises 24 hours per day each day of the week. MCIm shall provide its employees and agents with picture identification which must be worn and visible at all times while in the Collocation Space or other areas in or around the Premises. The photo identification card shall bear, at a minimum, the employee's name and photo, and the MCIm name. BellSouth reserves the right to remove from its Premises any employee of MCIm not possessing identification issued by MCIm, unless such employee can provide other identification verifiable by BellSouth. Notwithstanding the foregoing, BellSouth shall not permit access to its Premises to an MCIm employee who does not have the necessary card access device. MCIm shall be solely responsible for ensuring that any Guest of MCIm is in compliance with all subsections of this Section 7. BellSouth shall recover the costs for security for the Premises pro rata on a per square foot basis across all usable space in the Premises.

7.3.1.1 BellSouth shall recover the costs for security based on the following three scenarios:

1. The costs of security arrangements necessary to the provisioning of collocation space incurred by BellSouth that benefit only a single collocating party in a central office should be paid for by that collocating party;
2. The costs of security arrangements necessary to the provisioning of collocation space incurred by BellSouth that benefit both current and future collocating parties shall be recoverable by BellSouth from current and future collocating parties; and
3. The costs of security arrangements necessary to the provisioning of collocation space incurred by BellSouth that benefit current or future collocating parties and BellSouth shall be recoverable by BellSouth from current and future collocating parties, and a portion shall be attributed to BellSouth. When

multiple collocators and BellSouth benefit from modifications or enhancements, the cost of such benefits or enhancements shall be allocated based on the amount of square feet used by the collocator or BellSouth, relative to the total useable square footage in the central office.

7.3.1.2 MCIm shall provide the name and either the 1) date of birth or 2) driver's license number of each employee, contractor or agent provided access keys or cards ("Access Keys") prior to issuance of said Access Keys. Access Keys shall not be duplicated under any circumstances. MCIm shall be responsible for all Access Keys and for the return of all said Access Keys in the possession of MCIm employees, contractors, Guests, or agents after termination of the employment relationship or contractual obligation with MCIm or upon termination of this Attachment or the termination of occupancy of an individual collocation arrangement. MCIm shall notify BellSouth in writing immediately in the case of lost or stolen Access Keys. Should it become necessary for BellSouth to re-key buildings as a result of a lost Access Key or for failure to return an Access Key, MCIm shall pay all reasonable costs associated with re-keying.

7.3.1.3 MCIm shall submit to BellSouth the completed Access Control Request form (RF-2906-C) for all employees or agents requiring access to the Premises a minimum of fifteen (15) days prior to the date MCIm desires access to the Collocation Space. MCIm may submit the Access Control Request form any time after Firm Order to allow for reasonable access to the Collocation Space during construction.

7.3.2 BellSouth shall require MCIm employees to undergo the same level of security training as that applied to BellSouth's own employees and authorized contractors, but BellSouth must provide information to MCIm on the specific type of training required so that MCIm may, train its own employees.

7.3.2.1 BellSouth shall permit MCIm-designated employees and agents to access the Premises even if such employees or agents have not completed the required training; provided, however, that BellSouth shall require a security escort for such employees or agents and shall charge MCIm for such security escort.

7.3.3 BellSouth will use its best efforts to prevent harm or damage to MCIm's property and MCIm's employees and contractors while they are on BellSouth's Premises. BellSouth will restrict access to MCIm equipment by BellSouth employees and contractors and third parties to the extent necessary to perform their job functions. From time to time BellSouth may require access to the Collocation Space. BellSouth retains the right to access such space for the purpose of making BellSouth equipment and building modifications (e.g., running, altering or removing racking, ducts, electrical wiring, HVAC, and cables). BellSouth will give reasonable notice to MCIm when access to the Collocation Space is required. BellSouth shall provide the names of all personnel and agents entering the MCIm Space. MCIm may elect to be present whenever BellSouth performs work in the Collocation Space. The Parties agree that MCIm will not bear any of the expense associated with this work. Upon request from MCIm's security department, for the purposes of investigating an incident within the Premises, affecting MCIm's space or equipment, BellSouth will provide documentation regarding ingress and egress to the Premises.

7.3.4 While in MCIm space, BellSouth will comply at all times with its own security and safety procedures and requirements.

7.3.5 BellSouth will ensure that the area which houses MCIm equipment is adequately secured and monitored to prevent unauthorized entry. BellSouth will immediately notify MCIm's security department of any actual or attempted security breaches to the MCIm collocation space to the extent BellSouth becomes aware of such breaches.

7.3.6 Where collocation is cageless, these additional requirements apply at MCIm's request:

7.3.6.1 If MCIm uses locking cabinets to enclose equipment, operating racks, equipment spare parts, power feeds, and cable conduits, MCIm may limit access by BellSouth employees to emergencies only.

7.3.6.2 If the area where cageless collocation is located does not have an access card security system, BellSouth will install such a system. The access card system shall have a database which tracks and reports entrance and exit.

7.3.7 If surveillance is recorded on videotape, upon request from MCIm's security department for the purposes of investigating an

incident within the Premises affecting MCIm's space or equipment, BellSouth will provide access to such videotapes.

7.3.8 MCIm shall place a plaque or other identification affixed to MCIm's equipment necessary to identify MCIm's equipment, and MCIm shall display a list of emergency contacts with telephone numbers.

7.3.8.1 Neither party will use the Premises for marketing purposes. Except as provided in subsection 6.3.8, MCIm shall not place any identifying signs or markings in the area surrounding the Collocation Space or on the grounds of the Premises.

7.3.9 MCIm will be required, at its own expense, to conduct a statewide investigation of criminal history records for each MCIm employee being considered for work on the BellSouth Premises, for the states/counties where the MCIm employee has worked and lived for the past five years. Where state law does not permit statewide collection or reporting, an investigation of the applicable counties is acceptable.

7.3.10 MCIm shall not assign to the BellSouth Premises any personnel with records of felony criminal convictions disclosed by an initial background check pursuant to subsection 6.3.9. MCIm shall not assign to the BellSouth Premises any personnel with records of misdemeanor convictions except for misdemeanor pedestrian and traffic violations, without advising BellSouth of the nature and gravity of the offense(s). BellSouth reserves the right to refuse building access to any MCIm personnel who have been identified to have misdemeanor criminal convictions, provided, however, that such refusal has a reasonable basis. MCIm shall be deemed to have complied with the requirements of this Section pertaining to an individual employee(s) if, in good faith, it requests and receives from a competent vendor of background checking services a background check on the pertinent employee(s). MCIm shall not be required to warrant the reliability of the background checks. Notwithstanding the foregoing, in the event that MCIm chooses not to advise BellSouth of the nature and gravity of any misdemeanor conviction, MCIm shall certify to BellSouth that it shall not assign to the BellSouth Premises any personnel with records of misdemeanor convictions other than misdemeanor pedestrian and traffic violations.

7.3.11 For each MCIm employee requiring access to a BellSouth Premises pursuant to this agreement, MCIm shall furnish

BellSouth, prior to an employee gaining such access, a certification that the aforementioned background check and security training were completed. The certification will contain a statement that no felony convictions were found and that the security training was completed by the employee.

7.3.12 Security Investigations. The Parties shall cooperate fully with one another's investigations, including interviews, with either Party's employees, agents, or contractors into allegations of wrongdoing or criminal conduct committed by or involving the other Party's employees, agents, or contractors. The Security departments of each Party shall be the single point of contact regarding said investigations. Additionally, the Parties reserve the right to bill one another for all costs associated with investigations involving their employees, agents, or contractors if it can be reasonably established that their employees, agents, or contractors are responsible for the alleged act. The Parties shall bill one another for property which is stolen or damaged where an investigation determines the culpability of the responsible Party's employees, agents, or contractors. Either party shall notify the other party in writing immediately in the event that it discovers one of its employees already working on the BellSouth Premises is a possible security risk. The Party who is the employer, shall discipline, consistent with its employment practices up to and including removal from the BellSouth Premises, any employee found to have violated the security and safety requirements of this Section.

7.3.13 Use of Supplies and Equipment. Unauthorized use of telecommunications equipment or supplies by either Party, whether or not used routinely to provide telephone service (e.g. plug-in cards,) will be strictly prohibited and handled appropriately. Costs associated with such unauthorized use, including all associated investigative costs, may be charged to the offending Party.

7.3.14 Use of Official Lines . Except for non-toll calls necessary in the performance of their work, neither Party shall use the telephones of the other Party located on the BellSouth Premises. Charges for unauthorized telephone calls and all associated investigative costs may be charged to the offending Party.

7.3.15 Accountability. Full compliance with the Security requirements of this Section shall in no way limit the accountability of either Party to the other for the improper actions of its employees.

7.4 Environmental

The parties agree to utilize and adhere to the Environmental and Safety Principles identified as Exhibit B attached hereto.

7.4.1 Within ten (10) business days of MCIm's written request for space, BellSouth shall provide any information in its possession or available to it regarding the environmental conditions of the space provided for placement of equipment and interconnection. Information is considered "available" under this Agreement if it is in BellSouth's possession, or the possession of a current agent, contractor, or employee of BellSouth's.

7.4.2 BellSouth shall allow MCIm to perform any environmental site investigations, including, but not limited to, asbestos surveys, which MCIm deems to be necessary in support of its collocation needs, at MCIm's expense. MCIm shall notify BellSouth in writing if the results show an environmental violation of state standards, in order that BellSouth can perform a thorough investigation to ensure compliance with the law.

7.4.3 BellSouth shall not propose space to MCIm that BellSouth knows has an environmental contamination or hazardous material, that pose a threat to human health or violate OSHA requirements, that cannot be remedied within the required provisioning interval, if other space is available within the subject Premises that does not have such environmental contamination.

7.5 Intraoffice Capacity.

7.5.1 BellSouth shall provide intraoffice facilities (e.g., DS0, DS1, DS3, OC3, OC12, OC48, and STS-1 terminations) as requested by MCIm to meet MCIm's need for placement of equipment, interconnection, or provision of service.

7.6 Left Blank Intentionally

7.7 Provision of Telephone Jacks

7.7.1 BellSouth shall provide basic telephone service pursuant to the terms of this Agreement or under the applicable tariff for basic service, at MCIm's option, with a connection jack as requested by MCIm from BellSouth for the collocated space.

7.8 Space Conditions

7.8.1 BellSouth shall provide adequate lighting, ventilation, power, heat, air conditioning, and other environmental conditions for MCIm's space and equipment.

7.9 Access to Basic Facilities

7.9.1 BellSouth shall provide access to eyewash stations, shower stations, and drinking water, where available, within the collocated facility on a twenty-four (24) hours per day, seven (7) days per week basis for MCIm personnel and its designated agents. BellSouth will provide MCIm reasonable access to basic facilities, such as restroom facilities and parking while at BellSouth's Premises.

7.10 BellSouth will allow temporary occasional use of convenience outlets to MCIm, where available, while at BellSouth's Premises. For enclosed collocation space, if BellSouth constructs the enclosure, BellSouth will provide the collocation space with one AC outlet as part of the construction. If MCIm constructs the enclosure, MCIm would be responsible, through a BellSouth certified vendor, for providing outlets and grounding the cage and running the necessary wiring from the BellSouth electrical panel to the collocation space. BellSouth will provide stumble lighting to the collocation space. For cageless collocation, MCIm will be permitted to use existing BellSouth stumble lighting and convenience outlets.

7.11 Confidential Information

7.11.1 Treatment of Confidential Information is subject to the provisions of Part A, Section 20 of this Agreement.

7.12 Compliance with Performance Standards

7.12.1 BellSouth shall participate in and adhere to negotiated service guarantees, and Performance Standards.

7.12.2 BellSouth shall comply with performance standards set forth in Attachment 10. BellSouth shall compensate MCIm in accordance with Attachment 10 for any delays in the negotiated completion and turnover dates.

7.13 Notice of Work in or near Space

7.13.1 BellSouth shall provide MCIm with written notice five (5) business days prior to those instances where BellSouth or its subcontractors may be performing non-emergency work that has a

substantial likelihood of directly affecting the Collocation Space occupied by MCIm, or that is directly related to circuits that support MCIm equipment.

7.13.2 BellSouth will inform MCIm by telephone of emergency related activity that BellSouth or its subcontractors may be performing that has a substantial likelihood of directly affecting the Collocation Space occupied by MCIm, or is directly related to circuits that support MCIm equipment. Notification of any emergency related activity shall be made as soon as practicable after BellSouth learns that such emergency activity is necessary so that MCIm can take any action required to monitor or protect its service.

7.14 Construction of Space

7.14.1 At MCIm's option and upon request, BellSouth shall construct cages in compliance with MCIm's collocation request as specified in the Bona Fide Firm Order. At MCIm's request, BellSouth shall permit MCIm to subcontract the construction of physical collocation arrangements with BellSouth certified vendors in accordance with BellSouth's guidelines and specifications and at MCIm's expense, provided however, that BellSouth shall not unreasonably withhold approval of contractors. Any deviation to MCIm's request will be jointly negotiated between the parties. Upon request, BellSouth will confirm that scheduled completion dates are on target.

7.15 Acceptance Walkthrough

7.15.1 MCIm and BellSouth will complete an acceptance walk through of collocated space requested from BellSouth within fifteen (15) days of BellSouth's notification that the space is ready for occupancy. BellSouth will correct any deviations to MCIm's original or jointly amended request within five (5) business days after the walk through or a negotiated time frame, depending on the magnitude of the deviation, at BellSouth's expense. Any other additions or changes to the original or jointly amended request will be at MCIm's expense.

7.15.2 BellSouth will not be deemed to have completed work on a Collocation Space until it conforms to the original or jointly amended request. BellSouth shall provide MCIm's assigned terminations on the BellSouth frame to MCIm during the joint planning process. Based on the assigned terminations, BellSouth will create CFAs, which will be provided to MCIm prior to Space Acceptance.

7.16 Drawings

7.16.1 BellSouth shall provide Telephone Equipment drawings depicting the suggested locations for MCIm's Point of Termination Bay(s) to MCIm at the first joint planning meeting.

7.17 Joint Planning A joint planning meeting (that need not be face to face) between BellSouth and MCIm will commence within a maximum of seven (7) business days, unless the parties jointly agree upon a later date, from BellSouth's receipt of a complete and accurate firm order and the payment of agreed upon fees. Upon request for such information, BellSouth will provide the following information to MCIm at the joint planning meeting or within thirty (30) calendar days following:

7.17.1 Confirmation of the preliminary design and the equipment configuration requirements as reflected in the Application and affirmed in the Bona Fide Firm Order.

7.17.2 If available, the exact cable type and cable termination requirements for MCIm-provided POT bays (i.e., connector type, number and type of pairs, and naming convention) that will be used.

7.17.3 Detailed computer assisted design drawings depicting the exact path(s), with dimensions, for MCIm Outside Plant Fiber placement into MCIm collocated space**.**

7.17.4 Power cabling connectivity information including the sizes and number of power feeders and power feeder fuse slot assignment on the BellSouth Battery Distribution Fuse Board ("BDFB").

7.17.5 BellSouth contact(s) and escalation process (name(s) and telephone number(s) and escalation order) for the following areas of the collocation space preparation project:

Engineering
Provisioning
Billing
Operations
Physical & Logical Security
Site and Building Managers
Environmental and Safety

7.17.6 The target date for the release of BellSouth engineering

documents which shall include, but not be limited to, connector type, number and type of pairs, and naming convention.

7.17.7 Target commencement date, which shall be the date MCIm's equipment is turned up and operational on the BellSouth network.

7.17.8 The space completion date on which BellSouth will make the space available to MCIm. If the Parties agree to changes to the layout at the joint planning meeting that impact the space preparation, BellSouth shall provide the space completion date as soon as possible after the joint planning meeting, but no more than ten (10) days after the date of the joint planning meeting.

7.17.9 Identification of the demarcation point associated with the equipment reflected in the Bona Fide Firm Order.

7.18 Power

7.18.1 DC power as referenced in this Attachment refers to any DC power source supplied by BellSouth for MCIm equipment. It includes all superstructure, infrastructure, and overhead facilities, including, but not limited to, DC cable from the BellSouth power board to the BellSouth BDFB, cable racks and bus bars necessary to support DC power. BellSouth will supply power to support MCIm equipment at equipment specific –48VDC. BellSouth shall supply power to MCIm at parity with that provided by BellSouth to itself or to any third party. If BellSouth performance, availability, or restoration falls below generally accepted industry standards, BellSouth shall bring itself into compliance with such generally accepted industry standards as soon as technologically feasible. MCIm shall be responsible for cabling DC power from the BellSouth BDFB to MCIm's equipment.

7.18.2 AC power supplied by BellSouth into the MCIm equipment area, shall be supplied in the form of AC power feeders and conduits directly from the BellSouth essential bus. MCIm will be responsible for providing and installing the UPS in the Collocation Space and must comply with all applicable standards relating thereto, (e.g., floor loading, building codes, etc.). BellSouth will provide the voltages and phases that are available to BellSouth at the particular location. MCIm will be responsible for all costs for providing the AC power.

7.18.3 BellSouth shall make available –48 Volt (-48V) DC power for MCIm's Collocation Space only at a BellSouth BDFB within the

central office premises. If MCIm desires in the future to obtain power by any other method, the terms and conditions relating thereto shall be negotiated at that time.

7.18.4 BellSouth power equipment supporting MCIm's equipment will:

7.18.4.1 Comply with applicable industry standards (e.g., Bellcore and NEBS) or manufacturer's equipment power requirement specifications for equipment installation, cabling practices and physical equipment layout;

7.18.4.2 Have redundant power feeds and battery back-up at Parity with that provided for similar BellSouth equipment;

7.18.4.3 Provide central office ground, connected to a ground electrode located within the MCIm collocated space, at a location which meets BellSouth's standards and is jointly agreed upon by the parties at the initial planning meeting identified in subsection 7.17 preceding of this Attachment 5; and

7.18.4.4 Provide DC capacity and quantity to support the two-year equipment forecast for MCIm's collocation space in accordance with MCIm's collocation request.

7.18.5 BellSouth shall, within ten (10) days of MCIm's request:

7.18.5.1 Provide documentation submitted to and received from contractors for any contractor bids for any work being done on behalf of MCIm (this includes, but is not limited to, power supplies, and cage construction);

7.18.5.2 Where possible, provide an installation sequence and access that will allow installation efforts in parallel without jeopardizing personnel safety or existing MCIm services upon MCIm's execution of a waiver document, an example of which is attached as Exhibit D to this Attachment*;*

7.18.5.3 Provide Lock Out-Tag Out and other electrical safety procedures and devices in conformance with the most stringent of OSHA or industry guidelines.

7.18.6 Charges for -48V DC power will be assessed per ampere per month, based upon the actual amperes used, at the rates set

forth in Attachment 1. Rates include redundant feeder fuse positions (A&B) and cable rack to MCIm's equipment or space enclosure. When obtaining power from a BellSouth Battery Distribution Fuse Bay, fuses and power cables (A&B) must be engineered (sized), and installed by MCIm's certified vendor.

7.18.7 Charges for AC power will be assessed per breaker ampere per month. Rates include the provision of commercial and standby AC power. BellSouth shall engineer and install the protection devices and power cables for adjacent collocation. Charges for AC power shall be assessed pursuant to the rates set forth in Attachment 1 of this Agreement. AC power voltage and phase ratings shall be determined on a per location basis. At MCIm's option, MCIm may arrange for AC power in an adjacent space from a retail provider of electric power.

7.19 Provisioning Intervals.

7.19.1 Provisioning intervals for collocation space are listed below and are further subject to the applicable provisions of Attachment 10 of this Agreement.

BellSouth will complete construction for collocation arrangements under ordinary conditions as soon as possible and within a maximum of ninety (90) days for caged, and thirty (30) days for cageless collocation from the date BellSouth receives MCIm's firm order request. Intervals for virtual collocation must not exceed fifty (50) days from the date BellSouth receives MCIm's firm order request. The Parties may mutually agree to renegotiate an alternative provisioning interval or BellSouth may seek a waiver from this interval from the Commission.

7.20 Subsequent Application Fee. In the event MCIm or MCIm's Guest(s) desire to modify the use of the Collocation Space, MCIm shall complete an Application document detailing all information regarding the modification to the Collocation Space ("Subsequent Application"). BellSouth shall determine what modifications, if any, to the Premises are required to accommodate the change requested by MCIm in the Application. Such necessary modifications to the Premises may include but are not limited to, floor loading changes, changes necessary to meet HVAC requirements, changes to power plant requirements, and equipment additions not included in a previous application.

7.20.1 application. The application fee paid by MCIm for its request to modify the use of the Collocation Space shall be dependent upon the level of assessment needed for the modification requested. Where the Subsequent Application does

not require assessment for provisioning or construction work by BellSouth, no Subsequent Application Fee will be required. The fee for a Subsequent Application where the modification requested has limited effect (i.e., does not require assessment related to capital expenditure by BellSouth) shall be the Subsequent Application Fee as set forth in Attachment 1. If the modification requires capital expenditure assessment, a full Application Fee Charge for the appropriate state shall apply. For all subsequent Applications, BellSouth shall adhere to the response intervals set forth in subsection 2.1.1.3 of this Attachment.

7.21 Entrance Facilities

7.21.1 MCIm may elect to place MCIm-owned or MCIm-leased fiber entrance facilities into the Collocation Space. BellSouth will designate the point of entrance in close proximity to the Central Office building housing the Collocation Space, such as an entrance manhole or a cable vault which are physically accessible by both parties. MCIm will provide and place fiber cable at the point of entrance of sufficient length to be pulled through conduit and into MCIm's Collocation Space. If MCIm uses an entrance facility with a metallic member, BellSouth shall open the cable sheath in the vault and bond the metallic member to ground. In the event MCIm utilizes a non-metallic entrance facility, grounding of the cable will not be required. MCIm must contact BellSouth for instructions associated with duct assignments and scheduling and other information as required prior to placing the entrance facility cable in the manhole. MCIm is responsible for maintenance of the entrance facilities, except that BellSouth is responsible for the maintenance of any bonding required. At MCIm's option BellSouth will accommodate where technically feasible a microwave entrance facility pursuant to separately negotiated terms and conditions.

7.21.2 Dual Entrance. BellSouth will provide at least two interconnection points at each central office premises where there are at least two such interconnection points available and where capacity exists. Upon receipt of a request for physical collocation under this Attachment, BellSouth shall provide MCIm with information regarding BellSouth's capacity to accommodate dual entrance facilities. If conduit in the serving manhole(s) is available and is not reserved for another purpose for utilization within 12 months of the receipt of an application for collocation, BellSouth will make the requested conduit space available for installing a second entrance facility to MCIm's arrangement. The location of the serving manhole(s) will be determined at the sole discretion of

BellSouth. Where dual entrance is not available due to lack of capacity, BellSouth will so state in the Application Response.

7.21.3 Shared Use. MCIm may utilize spare capacity on an existing Interconnector entrance facility for the purpose of providing an entrance facility to another MCIm collocation arrangement within the same BellSouth Central Office.

7.21.4 Splicing in the Entrance Manhole. Although not generally permitted, should MCIm request a splice to occur in the entrance manhole(s), BellSouth, at its sole discretion, may grant such a request, provided that BellSouth will not unreasonably withhold approval of requests to make such a splice. All work performed in manholes shall adhere to the requirements of Attachment 6 (Rights of Way) of this Agreement.

7.21.5 Floor Space. The floor space charge includes reasonable charges for lighting, heat, air conditioning, ventilation and other allocated expenses associated with maintenance of the Central Office but does not include amperage necessary to power MCIm's equipment. When the Collocation Space is enclosed, MCIm shall pay floor space charges based upon the number of square feet so enclosed. When the Collocation Space is not enclosed, MCIm shall pay floor space charges based upon the following floor space calculation: [(depth of the equipment lineup in which the rack is placed) + (0.5 x maintenance aisle depth) + (0.5 x wiring aisle depth)] X (width of rack and spacers). For purposes of this calculation, the depth of the equipment lineup shall consider the footprint of equipment racks. No part of any apparatus attached to the rack shall extend horizontally beyond the front or rear edges of the front and rear base or guardrail of the rack. Rack depth is measured between the leading edges of the front and rear base or guardrails. If any equipment attached to the rack would otherwise extend beyond the front or rear edges of the front and rear base or guardrail of the rack, MCIm shall provide and install guardrail extenders. BellSouth will assign unenclosed Collocation Space in conventional equipment rack lineups where feasible. In the event MCIm's collocated equipment requires special cable racking, isolated grounding or other treatment which prevents placement within conventional equipment rack lineups, MCIm shall be required to request an amount of floor space sufficient to accommodate the total equipment arrangement. Floor space charges are due beginning with the date on which BellSouth releases the Collocation Space for occupancy or on the date MCIm first occupies the Collocation Space, whichever is sooner.

7.22 Certified Vendors

7.22.1 BellSouth shall provide MCIm with a list of BellSouth certified vendors for performance of work required or permitted under this Agreement. BellSouth shall indicate on the list what types of work each vendor is certified to perform. BellSouth shall provide MCIm with the specifications and training requirements necessary for a vendor to become BellSouth certified, and such specifications and training requirements shall be the same that BellSouth uses to certify its own vendors. If MCIm submits documentation to BellSouth that a proposed vendor, including MCIm, meets the specifications and training requirements, BellSouth shall consider that vendor for certification. Upon request from MCIm, BellSouth shall provide MCIm updates to the list of BellSouth certified vendors as vendors. MCIm's BellSouth certified vendor shall bill MCIm directly for all work performed for MCIm pursuant to this Attachment and BellSouth shall have no liability for nor responsibility to pay such charges imposed by the certified vendor.

7.22.2 MCIm's Equipment and Facilities. MCIm, including when using a BellSouth certified vendor, is solely responsible for the design, engineering, installation, testing, provisioning, performance, monitoring, maintenance and repair of the equipment and facilities owned by MCIm or leased by MCIm from a third party. Such equipment and facilities may include but are not limited to cable(s), equipment, and point of termination connections.

7.23 Janitorial Service. Each Party shall be responsible for the general upkeep and cleaning of its respective space.

7.24 Mechanic's Liens If any mechanic's lien or other liens shall be filed by a third party against property of either party (BellSouth or MCIm), or any improvement thereon by reason of or arising out of any labor or materials furnished or alleged to have been furnished or to be furnished to or for the other Party or by reason of any changes, or additions to said property made at the request or under the direction of the other Party, the other Party directing or requesting those changes shall, within thirty (30) days after receipt of written notice from the Party against whose property said lien has been filed, either pay such lien or cause the same to be bonded off the affected property in the manner provided by law. The Party causing said lien to be placed against the property of the other shall also defend, at its sole cost and expense, on behalf of the other, any action, suit or proceeding which may be brought for the enforcement of such liens and shall pay any damage and discharge any judgment entered thereon.

7.25 Inspections. BellSouth may conduct an inspection if MCIm adds equipment and may otherwise conduct routine inspections at reasonable intervals mutually agreed upon by the Parties. BellSouth shall provide MCIm with a minimum of forty-eight (48) hours or two (2) business days, whichever is greater, advance notice of all such inspections. All costs of such inspection shall be borne by BellSouth.

7.26 Eminent Domain If the whole of a Collocation Space or Adjacent Arrangement shall be taken by any public authority under the power of eminent domain, then this Attachment shall terminate with respect to the affected Collocation Space or Adjacent Arrangement as of the day possession shall be taken by such public authority and rent and other charges for the Collocation Space or Adjacent Arrangement shall be paid up to that day with proportionate refund by BellSouth of such rent and charges as may have been paid in advance for a period subsequent to the date of the taking. If any part of the Collocation Space or Adjacent Arrangement shall be taken under eminent domain, BellSouth and MCIm shall each have the right to terminate this Attachment with respect to the affected Collocation Space or Adjacent Arrangement and declare the same null and void, by written notice of such intention to the other party within ten (10) days after such taking.

7.27 Nonexclusivity. MCIm understands that this Attachment is not exclusive and that BellSouth may enter into similar agreements with other parties. Assignment of space pursuant to all such agreements shall be determined according to Applicable Law.

Section 8. Insurance

8.1 Insurance requirements for collocation are subject to the provisions of subsection 11.7 of Part A of this Agreement.

Section 9. Technical References

9.1 BellSouth shall comply with generally accepted industry practices.

EXHIBIT A

ADJACENT COLLOCATION

SPECIFICATIONS

General Requirements:

1. The area requested by the collocator must include sufficient space for maintenance, access and emergency power.
2. A cable splice is required at the Central Office vault to bond for lightning protection unless Dielectric Fiber Cable is used.
3. Each collocator must have a separate duct entrance into the vault.
4. The entrance and riser cables, along with vault splices will be maintained by BellSouth.
5. If unique splicing tools or testing equipment are required by the collocator, the collocator is responsible for providing the desired tools and equipment.
6. The entrance point for smaller offices that do not have vaults will be determined by the BellSouth Outside Plant Engineer based on availability and existing conditions.
7. The collocator is not allowed to create physical entry points into manholes, such as, drilling holes in the manhole wall to place cable knockouts, lateral ducts, etc.
8. The collocator must provide BellSouth with pre-terminated, fire retardant cable to be placed from the vault splice to the designated central office bay.
9. The method of providing power to the collocator shall be as allowed by the local authority having jurisdiction and all applicable laws, codes and standards apply. This is site specific and specifications will be designated by BellSouth with the Application Response.
10. Above ground building structures must comply with Telcordia's Generic Requirements for Telecommunications Huts (GR 43-CORE).
11. Below ground structures must be Controlled Environment Vaults (CEVs) that comply with Telecordia's Generic Requirements for Controlled Environmental Huts (GR 26-CORE).
12. The materials added on all new construction shall be in compliance with applicable law.
13. Collocator's certified contractor must restore the grounds to their original condition.

ENVIRONMENTAL AND SAFETY PRINCIPLES

The following principles provide basic guidance on environmental and safety issues when applying for and establishing Physical Collocation arrangements.

1. GENERAL PRINCIPLES

1.1 Compliance with Applicable Law. BellSouth and MCIm agree to comply with applicable federal, state, and local environmental and safety laws and regulations including U.S. Environmental Protection Agency (USEPA) regulations issued under the Clean Air Act (CAA), Clean Water Act (CWA), Resource Conservation and Recovery Act (RCRA), Comprehensive Environmental Response, Compensation and Liability Act (CERCLA), Superfund Amendments and Reauthorization Act (SARA), the Toxic Substances Control Act (TSCA), and OSHA regulations issued under the Occupational Safety and Health Act of 1970, as amended and NFPA and National Electrical Codes (NEC) and the NESC ("Applicable Laws"). Each party shall notify the other if compliance inspections are conducted by regulatory agencies and/or citations are issued that relate to any aspect of this agreement.

1.2 Notice. BellSouth and MCIm shall provide notice to the other, including Material Safety Data Sheets (MSDSs), of known and recognized physical hazards or Hazardous Chemicals existing on site or brought on site. Each party is required to provide specific notice for known potential Imminent Danger conditions. MCIm may contact 1-800-743-6737 to obtain an MSDS for a specific chemical used by BellSouth at the facility.

1.4 Environmental and Safety Inspections. BellSouth reserves the right to inspect the MCIm space with proper notification. BellSouth reserves the right to stop any MCIm work operation that imposes Imminent Danger to the environment, employees or other persons in the area or Facility.

1.5 Hazardous Materials Brought On Site. For any hazardous materials brought into, used, stored or abandoned at the BellSouth Premises by MCIm, MCIm is responsible for the proper handling and disposal of these materials, provided, however, that if MCIm uses a hazardous material not owned or controlled by MCIm, then MCIm shall not be responsible for that portion of such hazardous material in excess of the portion actually used or spilled by MCIm. Without prior written BellSouth approval, no substantial new safety or environmental hazards can be created by MCIm or different hazardous materials used by MCIm at a BellSouth Facility. MCIm must have adequate emergency response capabilities for its materials used or remaining at the BellSouth Facility.

1.6 Spills and Releases. When contamination is discovered at a BellSouth Premises, the party discovering the condition must notify BellSouth. All spills or releases of regulated materials will immediately be reported by MCIm to BellSouth.

1.7 Coordinated Environmental Plans and Permits. BellSouth and MCIm will coordinate plans, permits or information required to be submitted to government agencies, such as emergency response plans, spill prevention control and countermeasures (SPCC) plans and community reporting. If fees are associated with filing, BellSouth and MCIm will develop a cost sharing procedure. If BellSouth's permit or EPA identification number must be used, MCIm must comply with all of BellSouth's permit conditions and environmental processes, including environmental "best management practices (BMP)" (see Section 2, below) and/or selection of BellSouth disposition vendors and disposal sites.

2. CATEGORIES FOR CONSIDERATION OF ENVIRONMENTAL ISSUES

When performing functions that fall under the following Environmental categories on BellSouth's Premises, MCIm and BellSouth shall comply with the applicable sections of the current issue of BellSouth's Environmental and Safety Methods and Procedures (M&Ps), attached to this Exhibit and incorporated herein by reference. MCIm and BellSouth shall ensure that their respective employees, agents, and/or subcontractors are knowledgeable of and comply with those provisions of BellSouth's Environmental M&Ps which apply to the specific Environmental function being performed by that Party, its employees, agents and/or subcontractors.

The most current version of reference documentation must be requested from BellSouth.

2. Categories for Consideration of Environmental Issues (cont.)

ENVIRONMENTAL CATEGORIES	ADDRESSED BY THE FOLLOWING DOCUMENTATION
Disposal of hazardous material or other regulated material (e.g., batteries, fluorescent tubes, solvents & cleaning materials)	**Std T&C 450 GU-BTEN-001BT, Chapter 4 Std T&C 660-3 GU-BTEN-001BT, Chapter 10**
Emergency response	**GU-BTEN-001BT, Chapter Building Emergency Operations Plan (EOP) (specific to Premises)**
Contract labor/outsourcing for services with environmental implications to be performed on BellSouth Premises (e.g., disposition of hazardous material/waste; maintenance of storage tanks)	**Std T&C 450 Std T&C 450-B (Contact E/S or your DEC/LDEC for copy of appropriate E/S M&Ps.) Std T&C 660**
Transportation of hazardous material	**Std T&C 450 GU-BTEN-001BT, Chapter 4 Std T&C 660-3 GU-BTEN-001BT, Chapter 10**
Maintenance/operations work which may produce a waste Other maintenance work	**Std T&C 450 GU-BTEN-001BT, Chapter 10 29CFR 1910.147 29CFR 1910 Subpart O**
Janitorial services	**P&SM Manager - Procurement GU-BTEN-001BT, Chapter 4, GU-BTEN-001BT, Chapter 3 BSP 010-170-001BS (Hazcom)**
Manhole cleaning	**Std T&C 450 Std T&C 660-3 BSP 620-145-011PR Issue A, August 1996 GU-BTEN-001BT, Chapter 10 RL9706008BT**
Removing or disturbing building materials that may contain asbestos	**GU-BTEN-001BT, Chapter 3**

3. DEFINITIONS

Generator. Under RCRA, the person whose act produces a Hazardous Waste, as defined in 40 CFR 261, or whose act first causes a Hazardous Waste to become subject to regulation. The Generator is legally responsible for the proper management and disposal of Hazardous Wastes in accordance with regulations.

Hazardous Chemical. As defined in the U.S. Occupational Safety and Health (OSHA) hazard communication standard (29 CFR 1910.1200), any chemical which is a health hazard or physical hazard.

Hazardous Waste. As defined in Section 1004 of RCRA.

Imminent Danger. Any conditions or practices at a facility which are such that a danger exists which could reasonably be expected to cause immediate death or serious harm to people or immediate significant damage to the environment or natural resources.

Spill or Release. As defined in Section 101 of CERCLA.

4. ACRONYMS

DEC/LDEC - Department Environmental Coordinator/Local Department Environmental Coordinator

GU-BTEN-001BT - BellSouth Environmental Methods and Procedures

EVET - Environmental Vendor Evaluation Team

P&SM - Property & Services Management

Std. T&C - Standard Terms & Conditions

NESC - National Electrical Safety Codes

MICROWAVE COLLOCATION

Where technically feasible, BellSouth will provide for physical collocation of MCIm's microwave equipment on the roofs of BellSouth's Central Office Buildings. Such equipment will be limited to that necessary for interconnection of MCIm's network facilities to BellSouth's network or access to BellSouth's unbundled network elements.

Microwave Collocation includes placement of supporting masts, non-penetrating roof mounts ("NPRM"), penetrating pipe stands, parapet mounts, and microwave antenna(e) on the roof top or other suitable exterior spaces of BellSouth's Central Offices and does not include the construction of towers. The Parties will work together to determine the preferable type of antenna mount reasonably considering such factors as permitting requirements, roof maintenance issues and any other relevant factors. BellSouth shall have final approval of the type of antenna mount. The Parties agree that the elements listed below reflect requirements for Microwave Collocation, which shall be provided in accordance with the terms and conditions set forth below, and at the rates set forth in Attachment 1 of this Agreement. As used in this Agreement, "microwave" means those services contemplated by Part 21 of the FCC's regulations. The Parties acknowledge that Microwave Collocation requires unobstructed line-of-sight. Unobstructed line-of-sight will be provided by BellSouth where technically feasible but is not guaranteed to be available. MCIm accepts the responsibility of determining unobstructed line-of-sight at any location where MCIm's applies for Radio Collocation.

1. PROVISIONING PROCESS AND FEES

A. **Initial Site Visit**

MCIm will provide a Site Visit Request to BellSouth, in writing, setting forth the names of the BellSouth Central Office Building(s) MCIm wishes to visit for potential Microwave Collocation. Such site visit consists of MCIm representatives and appropriate BellSouth personnel visiting a BellSouth Central Office building for the purpose of determining whether an unobstructed line-of-sight is technically feasible. MCIm will be responsible for making an unobstructed line-of-sight determination. Such Site Visit does not obligate MCIm to request, or BellSouth to provide, Microwave Collocation on the site. The site visit will take place within fifteen (15) business days of receipt by BellSouth of MCIm's Site Visit Request or as soon thereafter as can be scheduled by the Parties.

MCIm will submit a Site Visit Request fee as set forth on Attachment 1 of this Agreement and will pay for the reasonable cost BellSouth incurs for travel, if necessary, for each site

requested with each Site Visit not to exceed two hours. Charges for site visits that take longer than two (2) hours will be charged by BellSouth to MCIm at BellSouth's loaded labor rates on a per hour basis in addition to the $250.00 fee. BellSouth will make every effort possible to use resources near the requested location to minimize travel required. If BellSouth determines that airline travel is required, BellSouth will contact MCIm in an effort to discuss possible alternatives.

B. **Microwave Collocation Application**

This provision shall coincide with provisions under Section 6 and 7 of the collocation agreement.

BellSouth will respond to Microwave Collocation Application(s) pursuant to Section 6 of this Agreement.

MCIm shall submit the Application and Inquiry document and appropriate collocation application fee pursuant to Attachment 1 of this Agreement, in addition to a Microwave Collocation Attachment for each central office building where MCIm seeks Microwave Collocation. This application and fees will apply both to space on the roof as well as space inside the BellSouth central office.

MCIm shall provide BellSouth with the following data, where applicable, on the application to the extent available recognizing that certain information may change depending on the final determination of the location providing line of sight:

- Type of antenna mount (pipe, NPRM)
- Type of equipment to be collocated within MCIm's case (vendor, capacity)
- Line of sight requirements (Azimuth)
- Relevant information includes: Station Name, Call Sign, Latitude, Longitude, Primary Antenna Type, Equipment Type, Equipment Emission, Power (dBm/Watts), Receive Level (dBm), EIRP (dBm/Watts), Transmit Frequency (MHz)
- WEIGHT AND CONFIGURATION
- Other relevant information as identified at the INITIAL site visit.

Roof Inspection: BellSouth may require a roof inspection at any site where MCIm requests Microwave Collocation. MCIm will bear the reasonable cost of the inspection including reasonable travel cost if any. BellSouth intends to use an independent contractor which may be accompanied by BellSouth personnel. The roof inspection fee shall be assessed on an individual case basis unless negotiated as a flat rate by the Parties. Such Roof Inspection does not obligate BellSouth to provide Microwave Collocation on the site.

If BellSouth concludes that rooftop/exterior space which provides MCIm with unobstructed line-of-sight does not appear to be technically feasible, BellSouth will provide MCIm a written explanation of such technical infeasibility within thirty (30) business days of BellSouth 's receipt of the collocation application including those cases where BellSouth's known business plans provide for or include an addition to the building which would impact the line of sight. This explanation will be included in the response to MCIm's application.

Escorted access to the roof will be provided as necessary by BellSouth pursuant to subsection 7.6 of this Agreement. BellSouth or its designated subcontractors shall perform all necessary work associated with the Microwave Collocation arrangement involving power and building modifications unless otherwise agreed to by the Parties. All work performed shall be done by a BellSouth certified vendor as referenced in provision 6.5 in the Collocation Agreement unless the Parties agree that another certified vendor will be used. The Parties acknowledge that MCIm may become a certified vendor.

If rooftop/exterior space is available BellSouth shall provide MCIm an estimate for such Microwave collocation as described more fully in provision 1.C at the same time BellSouth provides its interior collocation space quote.

C. **Preparation of Estimate / Application Response**

Within thirty (30) business days of receiving from MCIm a single complete and accurate Application and Inquiry document, BellSouth will provide, as more fully described below, an estimate including an estimate for the Monthly Recurring Charges pursuant to the rates set forth in Attachment 1of this Agreement.

The estimate shall reflect the specifications submitted by MCIm and may change based on the actual field conditions encountered during construction.

(2) Estimate:

(a) The Estimate /Application Response shall set forth separate estimated charges for the following work related to the installation of the Microwave Antenna Arrangement.

(i) **Architectural Plan and Structural Review**:

This shall be the reasonable sum of hourly charges of BellSouth Architects or its contractors necessary to review the plans for the Microwave Collocation Arrangement. This will include applicable consulting charges and fees for reviewing permitting material and/or assisting MCIm in the permitting process to the extent required.

(ii) **Permitting Review**:

This shall be the sum of the hourly charges of BellSouth Property and Services Management and/or Project Managers whose time was reasonably necessary and actually spent reviewing permitting material and/or assisting MCIm in the permitting process. BellSouth shall have final approval authority on all proposed conditions, (which shall not be unreasonably withheld) imposed by relevant jurisdictions and BellSouth shall have the right to be represented at all hearings in connection with governmental approvals.

(iii) **Exterior (and Related Interior) Building Modification Work**:

BellSouth will include a quote for BellSouth to perform coring within the Central Office, roof strengthening or any other exterior or related interior building modification that may be required.

(iv) **Supervision of General Contractor**:

This shall be the reasonable sum of the hourly charges, if necessary, of any BellSouth Property and Services Management personnel, Consultants, or Project Managers who monitor the Microwave Antenna Support Structure installation performed by MCIm's contractor. The level of BellSouth's personnel or consultants shall be commensurate with the requirements for supervising the project and monitoring construction.

(v) **Special Security Construction:**

If BellSouth demonstrates that new secure access to the Microwave Collocation location is reasonably necessary, the costs associated with the construction of such access shall be described on a separate schedule to be provided by BellSouth to MCIm.

(b) **Recurring Charges**

These consist of:

(i) Monthly Recurring Roof-Top Space Rental Fee:

The Monthly Recurring Roof-Top Space Rental Fee shall be on a per square foot basis with a minimum of 12 square feet per radio arrangement as set forth in Attachment 1 of this Agreement. MCIm is limited by building and structural support constraints for determining the number of antenna(e) which can be placed on a roof mount, pipe stand, or parapet

mount. The diameter of the microwave antenna(e) will be subject to a height limitation of twenty (20) feet above the building or point of attachment, subject to line-of-sight, safety, and structural engineering guidelines, (e.g., weight, wind load). Such equipment will be subject to a structural analysis to be performed by BellSouth's Structural Engineer at MCIm's sole expense, to ensure that the equipment does not overload the building structure. If any structural reinforcement is required in order to accommodate the placement of the requested diameter and height of such microwave antenna(e), MCIm will not be allowed to place such microwave antenna(e). MCIm agrees that the height of the structure will be no greater than the minimum required to accommodate line of sight requirements. At no time shall an antenna(e) be directed across open roof space without approval of BellSouth which shall not be unreasonably withheld.

The billing for the Rooftop Space Rental Fee shall begin the date the interior and rooftop space preparation activities are complete and the space is made available to MCIm, or the date MCIm first begins the Rooftop radio equipment installation, whichever is sooner. BellSouth will work with MCIm to avoid unreasonable time differences between the completion of rooftop space preparation and interior collocation space construction**.**

All estimates shall be valid for thirty (30) days from issuance, and MCIm shall accept, reject or request changes within such time period, unless an extension is requested in writing by MCIm and agreed to by BellSouth. Such extension will not exceed thirty (30) days. To accept an estimate, MCIm shall so state in writing and shall pay BellSouth 50% of the total estimated charges ("Initial Payment") with the balance of the actual charges due upon completion of the Microwave Collocation area and any necessary supporting electrical or building modification work. Payment requirements will be commensurate with Attachment 1 of this Agreement.

D. **Pre-Design Meeting**

Unless otherwise agreed to by the Parties, a joint planning meeting or other method of joint planning between BellSouth and MCIm will commence within a maximum of fifteen (15) business days from BellSouth's receipt of a Bona Fide Firm Order and the payment of agreed upon fees. At such meeting, the Parties will agree to the preliminary design of the Microwave Collocation Space and the equipment configuration requirements as reflected in the Application and affirmed in the Bona Fide Firm Order. The Collocation Space Completion time period will be provided to MCIm during the joint planning meeting or as soon as possible thereafter. BellSouth will complete all design work following the joint planning meeting. This will be the same meeting that takes place for the interior collocation arrangement.

E. **Equipment and Testing**:

MCIm shall be responsible for providing, at its sole expense, the antenna(e), coaxial cable, brackets, connectors, support structure, grounding and bonding materials, and weather-proofing materials for such support structure or antenna(e) required for the Microwave Collocation. MCIm shall also be solely responsible for final adjustments (e.g., pointing) of the antenna(e).

F. **Use Permits**:

MCIm shall be responsible for obtaining all relevant Use Permits ("UP") and shall bear all costs and fees. MCIm shall regularly apprise BellSouth of the status of such permitting and consult with BellSouth as reasonably necessary.

2. NO PROPERTY RIGHT CONFERRED

Notwithstanding anything contained herein to the contrary, Microwave Collocation shall not confer or be deemed to confer any property interest or right in BellSouth's property, and MCIm hereby acknowledges that the rights conferred hereunder shall constitute merely a non-exclusive license to use a portion of BellSouth's property solely for the purposes set forth herein. A limit

of two (2) MCIm Microwave Collocation arrangements per Central Office will be permitted unless otherwise agreed to by the Parties.

Title to MCIm's Microwave Collocation equipment shall remain in MCIm as the property of MCIm and shall not become fixtures to BellSouth's property.

3. RESPONSIBILITY OF THE PARTIES

A. MCIm shall obtain any and all applicable and necessary permits, variances, licenses, approvals and authorizations from the governmental agencies with jurisdiction, including without limitation, use permits and buildings permits. FCC licenses and FAA approval, if required, to operate and maintain MCIm's facilities during the Term of this Agreement.

B. MCIm shall not use BellSouth's property or permit MCIm's agents or contractors to do anything in or about the Central Office(s) in conflict with any applicable law affecting the condition, use or occupancy of the property or the installation, operation or maintenance of MCIm's Microwave Collocation equipment. MCIm shall not commit any public or private nuisance or any other act or practice which might or would materially disturb the quiet enjoyment of any occupant of nearby properties.

C. Where BellSouth performs any of the work pursuant to the quotes set forth in 1.C.(2)(a)of this Exhibit C, BellSouth shall select the architect, engineers, surveyors, contractors, suppliers, consultants and subcontractors which may be necessary to develop plans, furnish materials and equipment, and perform construction work. BellSouth shall manage all such work in accordance with the plans and specifications approved by the Parties, all applicable laws, codes and regulations, and shall require that all contractors perform their work in a good workmanlike manner. BellSouth shall require that all BellSouth Contractors include MCIm as an Additional Insured to any policies of insurance maintained by the Contractor for purposes of the work, and shall indemnify MCIm from losses, costs and expenses incurred as a result of contractor's work. MCIm hereby acknowledges and agrees that BellSouth shall not be liable for the work performed, material, supplies, or work products furnished by any contractor, and that MCIm shall look solely to the contractor and any warranties, indemnification or insurance furnished by such Contractor, waiving and releasing BellSouth from any claim or liability therefrom except to the extent of the negligence

or willful misconduct of BellSouth in the performance of its project management activities.

d. Notwithstanding any other provision of this Attachment, MCIm hereby acknowledges that BellSouth may have existing wireless communications facilities of its own or of other tenants or licensees on or at BellSouth's Central Office, and/or BellSouth may desire from time to time throughout the term of this Agreement to enter into agreements with other wireless communications providers for the installation, operation and maintenance of communications facilities on or at BellSouth's Property ("Other Wireless Carriers"). MCIm shall cooperate with BellSouth and all Other Wireless Carriers so as to reasonably accommodate the needs and requirements of such Other Wireless Carriers with respect to the installation, operation, use and maintenance of their equipment and facilities, and all necessary alterations, modifications and other improvements to BellSouth's property, including utility connections and access. Subject to ownership of any exclusive frequency rights, MCIm's facilities shall not physically, electronically, or inductively interfere with the existing BellSouth or other customers' or tenants' existing facilities. Each transmitter individually and all transmitters collectively at a given location shall comply with appropriate federal, state, and/or local regulations governing the safe levels of RF radiation. The foregoing obligations shall apply equally to all Other Wireless Carriers.

e. In the event MCIm desires to relocate any of its then-existing Microwave Collocation facilities to a different place on the relevant BellSouth Central Office rooftop, MCIm shall submit a new application with a fee to BellSouth specifying the new location MCIm proposes to occupy. If the relocation does not require BellSouth to expend capital, then a Subsequent Application fee will apply as covered in Exhibit A.

f. BellSouth shall, within thirty (30) business days of receipt of a complete application, approve such relocation or describe, in writing, why such relocation is not technically feasible.

G. At its sole cost and expense, MCIm shall maintain MCIm's Microwave equipment, including without limitation, all necessary repairs, replacements and restorations. In addition, MCIm shall keep its Microwave Collocation space in a good, neat, sanitary and workmanlike condition. If, after 10 days of receiving written notice from BellSouth, MCIm fails to

keep its Microwave Collocation space in such workmanlike condition, BellSouth shall have the right but not the obligation to clean up the space on MCIm's behalf. In such event, MCIm shall be liable to BellSouth for the cost and expense of such work, upon written demand.

4. SECURE ACCESS

Pursuant to Section 7 of the Collocation Attachment

5 CABLE PROVISIONING

MCIm is responsible for providing and running the cable from the radio frequency (RF) equipment to the collocation cage through the use of a BellSouth certified vendor. BellSouth will be responsible for providing any necessary cable support structure at a rate indicated in Attachment 1 of this Agreement. A BellSouth consultant must approve how the cable will be run.

6. LINE OF SIGHT

BellSouth will manage roof space on a first-come /first-served basis. BellSouth will work cooperatively with MCIm in determining suitable space for MCIm equipment. Once the parties mutually determine an initial location which provides for line of sight pursuant to 1.c above, MCIm is guaranteed a clear line of sight from the antenna mount and the edge of BellSouth's roof line. If BellSouth requires a building enhancement modification or through the placement of additional equipment obstructs MCIm's existing line of sight, BellSouth will work with MCIm to move the antenna mount or raise the height of the antenna mount for a clear line of sight. The costs of this modification will be borne by BellSouth.

If a third party elects to place equipment on the roof that obstructs an existing line of sight, the third party application will be denied unless all three parties mutually agree to move an existing arrangement to allow for a clear line of sight. The costs of this application will be borne by the third party.

7. ANTENNA MODIFICATIONS

MCIm is limited to placement of two microwave antenna(e) within the designated space. MCIm must submit an application with a fee before adding additional equipment to the microwave collocation space or to move equipment outside of designated space. MCIm may not construct improvements or make Major Alterations to its rooftop space or radio transmission facilities without prior written approval from BellSouth, which will not be unreasonably withheld. BellSouth shall respond to any single request (application) within thirty (30) business days. "Major Alterations" shall include but not be limited to: (i) additional construction by MCIm of support equipment within its rooftop space, (ii) any modification to the rooftop space. "Major Alterations" shall not include (i) replacement of mounted equipment with like-sized and weight or smaller mounted equipment of similar functionality, (ii) routine repairs and maintenance to such microwave transmission facilities. Additional equipment or movement of existing equipment will require a new application and application fee Anything outside of normal maintenance may require a subsequent application fee as indicated in Attachment 1 of this Agreement.

8. USE OF ANTENNA SPACE ON OTHER BELLSOUTH TOWERS

Requirements for antenna space on existing towers that are not part of a BellSouth central office will be handled through BellSouth's Master Licensing Process.

9. EQUIPMENT REMOVAL

If, at any time, BellSouth reasonably determines that any of MCIm's facilities or equipment or the installation of MCIm's facilities or equipment does not meet the requirements outlined in this Agreement, MCIm will be responsible for the costs associated with the removal of such facilities or equipment or modification of the facilities or equipment or installation thereof to render it compliant. The removal of equipment must be done by a BellSouth certified vendor. If MCIm fails to correct any non-compliance with these standards or fails to demonstrate that the equipment is compliant within fifteen (15) days' written notice to MCIm, BellSouth may have the facilities or equipment removed or the condition corrected at MCIm's expense. Removal of Microwave

Collocation equipment shall be pursuant to the provisions of the Collocation Attachment to this Agreement.

10. NATURE OF USE

MCIm equipment must comply with BellCore Network Equipment Building System (NEBS) Requirements, Electromagnetic Compatibility and Electrical Safety Generic Criteria for Network Telecommunication Equipment (TR-NWT-001089), and FCC OET Bulletin 65 dated 08/97. Requirements of provision 5.1 of the Collocation Agreement also apply. The operation of MCIm's microwave equipment shall comply with all applicable federal and state RF guidelines.

11. POWER REQUIREMENTS FOR RADIO ARRANGEMENT

BellSouth will not provide power or environmental support to the roof space. If BellSouth agrees in response to a specific request by MCIm to provide power or environmental support to the roof space, MCIm will bear all associated costs as specified by BellSouth to provide such services. In such case requirements set forth in Section 7 of the Collocation Attachment to this Agreement will apply.

12. GROUNDING AND BONDING

MCIm at its expense will ensure that any microwave equipment placed on the rooftop collocation space or in the building shall be grounded and bonded according to BellSouth's standards which shall be at a minimum consistent with industry standards. BellSouth agrees that grounding and bonding requirements shall be applied in parity to itself and other Interconnectors for similar types of equipment.

13. COLLOCATION AGREEMENT PROVISIONS

Any provision provided specifically herein shall be in addition to applicable provisions in the Collocation Attachment of this Agreement.

RADIO COLLOCATION RATE ELEMENT DEFINITIONS AND CONDITIONS

Non-recurring charges - Relating to Microwave Roof Equipment

1) **Microwave Preparation Fees**

   Architectural Plan and Structural Review
   Exterior and Related Interior Building Modification Work
   General Contractor Supervision
   Special Security Construction

2) **Coring/Cable Support Structure**

   Electrical and Building modification work for coring
   Weather Proofing
   Cable Support Structure

3) **Roof Preparation (if applicable)**

   Engineering Study (To develop roof preparation alternatives/costs)

4) **Escort - charge for access to roof**
   Charge for access to Roof

Recurring charges - Relating to Microwave Roof Equipment

1) **Roof Space Lease Charge**

   Monthly rate for leasing rooftop or other suitable exterior space on BellSouth CO on a per square foot basis.

RADIO COLLOCATION APPLICATION ATTACHMENT

1. Name/Address of Central Office(s)
2. Proposed Rooftop/Exterior Space Location of Microwave Equipment
3. Description of Microwave Equipment

4 Other

Exhibit D

BELLSOUTH

AGREEMENT FOR ACCESS TO UNFINISHED COLLOCATION SPACE
CUSTOMER ACCEPTANCE DOCUMENT

This agreement represents approval and acceptance by the interconnecting party (Customer) of the space provided in the BellSouth Telecommunications Central Office identified below:

Company Name _____

Reference Number _____ Office CLLI Code _____

Street Address _____City / State / Zip _____

Access to Unfinished Collocation Space

BellSouth will permit Collocator's certified vendor ("Vendor") to access collocation space located within the above referenced central office before the completion of space and infrastructure preparation work for the purpose of initiating equipment installation and for any other lawful purpose subject to the following conditions:

1. Collocator will request access to unfinished collocation space on behalf of Vendor by written notice provided seven (7) calendar days' in advance of the date access is desired.
2. In accessing unfinished collocation space, Vendor will not interfere with the continuation of space preparation work by BellSouth. Space preparation will continue without interruption and according to methods and procedures deemed appropriate by BellSouth in its sole judgment unless BellSouth and Collocator provide otherwise through a writing signed by both.
3. Collocator acknowledges that the presence of Vendor in unfinished collocation space and the installation of equipment in such space creates an additional risk of loss or damage to property and injury or death to persons, which risk could be avoided by deferring Vendor access until completion of all space preparation work. Collocator expressly agrees to assume such additional risk and to release and discharge BellSouth from any loss, liability, claim or cause of action arising from BellSouth's activities in the unfinished collocation space or Vendor's access thereto or the presence of Collocator's equipment therein, unless such loss, liability, claim or cause of action is caused by the negligence or willful misconduct of BellSouth.
4. Unless the loss, liability, claim or cause of action is caused by the negligence or willful misconduct of BellSouth, Collocator will indemnify and save harmless BellSouth from any liabilities, causes of action, lawsuits, penalties, claims or demands (including the costs, expenses and reasonable attorneys' fees on account thereof) that may be made: (a) by anyone for injuries of any kind, including but not limited to personal injury, death, property damage and theft, resulting from BellSouth's activities in the unfinished collocation space or Vendor's access thereto or the presence of Collocator's equipment therein; or (b) by any employee or former employee of Collocator or Vendor or any of their agents or subcontractors for which Collocator's or Vendor's, their agents' or subcontractors' liability to such employee or former employee would otherwise be subject to payments under the state Worker's

Compensation or similar laws. Collocator, at its own expense, agrees to defend BellSouth, at BellSouth's request, against any such liability, cause of action, lawsuit, penalty, claim or demand. BellSouth will notify Collocator promptly of any written claims or demands against BellSouth for which Collocator is responsible hereunder.

APPROVED / ACCEPTED:

By: _____ _____ _____
_____

Collocator (Print Name) Authorized Signature Title
Date

Customer Acceptance

The signature of the customer in the space provided below represents the following:

1. Customer acknowledges that BellSouth has not completed space and infrastructure work for the location designated for the customer's telecommunications equipment.
2. Customer is satisfied that the space(s) will be completed in a satisfactory, workman-like manner.
3. Customer accepts space as constructed pursuant to Bona Fide Firm Order.
4. Customer acknowledges that they will be charged for the space beginning with the date on which BellSouth releases the Collocation Space for occupancy or on the date the customer first occupies the Collocation Space, whichever is sooner.

APPROVED / ACCEPTED:

By: _____ _____ _____
Collocator (Print Name) Authorized Signature Title
Date

By: _____ _____ _____
BellSouth Rep. (Print Name) Authorized Signature Title
Date

EXHIBIT E

HAZARD COMMUNICATION "RIGHT TO KNOW"

HAZARD COMMUNICATION "RIGHT TO KNOW"

1. Introduction and Applicability

This practice outlines the BellSouth Telecommunications (BST) Hazard Communication Program. This practice replaces all previous issues of BSP 010-170-001.

- Purpose

The Hazard Communication Program is based on a simple concept – that employees have both a need and a right to know the hazards and identities of the chemicals to which they are exposed when working. They also need to know what protective measures are available to prevent adverse effects from occurring. This program is designed to meet BST's responsibilities to its' employees and its contractor, as related to the requirements contained in Ocupational Safety and Health Administration (OSHA) Hazard Communications Standard found in 29 CFR 1910.1200.

- Responsibilities

The following responsibilities apply to the Hazard Communication Program at BST:

Entity	Responsibility
Manufacturers, Importers of Hazardous Chemicals	• Determines the hazards of chemicals and prepare a Material Safety Data Sheets (MSDS) for all hazardous Chemicals • Provides the MSDS to the purchaser of the • hazardous chemical
Corporate Resources Environmental and Safety Organization	• manages the MSDS databases through an outside vendor • provides assistance in assessing hazards of chemicals • maintains knowledge of chemicals used at BST • conducts reviews to ensure compliance • provides logistical and technical support tooperational departments in completing their responsibilities
Hazard Information Services (HIS) 1-800-743-MSDS	• manages MSDS information • provides work related hazardous chemical information to BST employees and BST vendors • provides home/non work related hazardous chemical information to BST employees

	• provides actual MSDS upon request
Building Emergency Manager	• receives inventories and posts on bulletin board
Entity	Responsibility
Supervisors of workers that use and are exposed to chemicals	• inventories chemicals used in their work group • provides new MSDSs to HIS for products purchased outside of official procurement process • labels chemicals as appropriate • provides training in Hazard Communication • calls for disposition of any chemical that is unlabeled and cannot be identified
Managers of vendors	• includes 'Hazard Communication" contract language in contractual agreements • provides the BST hazardous chemical information to contractors that work in BST workplace and will be using or exposed to chemicals • obtains MSDS from contractors who bring hazardous chemicals into BTS operations where exposure to BST employees is possible • ensures appropriate BST/other building occupants are made aware of new chemicals being brought into the workplace
Employee	• follows Hazard Communication training • follows information on MSDSs • follows precaution on chemical container labeling • always wears the proper Personal Protection Equipment (PPE) • reports unmarked chemical container labeling • properly disposes of chemicals • if in doubt, always ask the supervisor about the safe use of chemicals calls 1-800 743-MSDS to get more information on companies
Procurement	• obtains MSDS from vendors of products/chemicals prior to contract agreements of ordering • provides MSDSs to HIS
Contractor/Vendor	• informs their employees of BST hazardous chemicals • notifies BST of any chemical brought into the company by submitting MSDS to Contract Manager (required prior to using chemicals) • prepares Method of Procedure (MOP) for any unusual use of chemicals in BST buildings • contacts HIS for MSDS information.

- Applicability

This program is applicable to certain chemicals and certain work functions. Use the following tables to determine each work group's applicability.

(a) Functions

Each work group should determine if they are included according to the following work functions:

ns	ption
d	• employees that "use" hazardous chemicals during normal work operations, non-routine tasks or during emergencies (Use" means to package, handle, react, or transfer chemicals)
ed	• warehousing functions for chemicals that are stored and remain sealed*** • activities that do not use hazardous chemicals and do not have a potential to be exposed to hazardous chemicals that other work groups use.

NOTE: ***Basically, employers having these types of work operations need only keep labels on containers as they are received; maintain material safety data sheets that are received, and give employees access to them; and provide information and training for employees. Employers do not have to have written hazard communication programs and lists of chemicals for these types of operations.

(b) Chemicals

The hazardous nature of the chemical, the potential for exposure, and how the chemical is used are the factors which determine whether a chemical is covered under this program. The following Step/Action table summarizes this information for BellSouth.

STEP	ACTION	
Start	Consider all chemicals in all physical forms – liquids, solids gases, vapors, and fumes.	
	Is the chemical hazardous? If NO, STOP here, you do not have to inventory this chemical If YES, go to Step 2	
	Identifying Hazardous Chemicals: These are chemicals that are caustic, toxic, explosive and/or have the following health affects:	
	Health Affects	Examples
	Causes acute (immediate) health problems, such as	• sulfuric acid found in

	rashes or skin burns that show up immediately after contact	batteries • hydrochloric acid
	causes chronic (long term) health problems that develop from repeated exposure	• lead • asbestos • halons (fire extinguishers)
	may cause injury due to immediate release of pressure	• compressed gases
	may cause a dangerous reaction if mixed with air, water, heat or cold	not likely to occur at BellSouth
	Is the chemical used in the same manner as it would be used at home(this is a consumer product). If YES, Do NOT inventory this chemical. If NO, go to Step 3.	Consumer Products; Generally theses are products that have a UPC (uniform product code) on the container, E.g.,. wasp spray, spray paint, white-out, cleaners, etc.
	Does the chemical offer potential for exposure? If NO, Do NOT inventory this chemical. If YES, go to Step 4.	Those that don't cause exposure include manufactured items that do not release or otherwise result in exposure to a hazardous chemical under normal • equipment frames • building materials

	Is the chemical a hazardous waste (responsibilities are addressed under other EPA requirements) If YES, Do NOT inventory this chemical. If NO, go to Step 5	• lead waste • mercury waste • spent solvents
	Inventory this chemical	• sulfuric acid in batteries • fuel in tanks • asbestos, etc.
	Go back to step 1 for each additional chemical	

NOTE: Although the regulations outline the above chemical applicability, BellSouth will still maintain in the HIS database, all MSDSs of products purchased. Employees can obtain information about any of these products by calling 1-800-743-MSDS.

- BellSouth Program Components

BellSouth's program includes the following components. The details are covered in the appropriate section.

Component	Who Does It	For More Information, see Section
ProgramDevelop-ment/ Maintenance	• Corporate Resources Environmental Safety	
Inventory of Haz-ardous Chemicals	• Supervisor of work function	
Material Safety Data Sheets (MSDSs)	• Procurement • Anyone who purchases a chemical • Vendors/Contractors	
Labeling of Chemicals	• Manufacturers/supplier • Supervisor • Employee using chemical	
Training	• Supervisor	
Posting of Informa-tion	• Supervisor • Corporate Resources Environmental/ Safety	
Contractor Respon-sibilities	• Vendor Manager • Contractor	
Hazard Chemical Disposal	• Employees • Hazardous Material Disposition (HMD)	
Hazard Communica-tion Compliance Review	• Corporate Resources Environmental Safety/Responsible Department	

2. Program Development and Maintenance

The overall management of the BST Hazard Communication Program is the responsi-bility of the Corporate Resources Environmental /Safety organization. A copy of this document is available, upon request, to employees, their authorized representatives, and any Federal, State or local governmental agency.

3. Inventory and Hazardous Chemicals

A Hazardous Chemical Inventory indicating the presence of hazardous chemicals used during work activity must be conducted by the end of June of each year. The purpose of this inventory is to account for hazardous chemicals used so that proper training on the hazards of the chemicals can occur. If a chemical is discovered in the inventory that has not previously been identified and the chemical is actually used by a work group
or otherwise causes exposure, the supervisor must train all affected employees on the chemical immediately.

3.1 Completing the Inventory

The completion of the inventory should be accomplished by each work group for those chemicals that are actually used by that group. Chemicals to be considered actually could be used at a BST building, or transported by a technician and used at a work site away from the BST building. (Note- warehoused chemicals do not have to be inventoried.)

A copy of the inventory is shown in Exhibit 2. The following items on the inventory must be completed:

- Building Address/GLC
- Product Name
- Manager who conducted the inventory
- Title
- Date(s)

The number of containers and container size is optional. This inventory will be used as a basis for all subsequent training in the use of the listed Hazardous chemicals.

3.2 Typical Inventories

BellSouth does not use a wide range of chemicals that meet the hazardous chemical applicability (see Section 1.3.2) The following table list the chemicals that would apply to typical buildings and work functions at BellSouth. All buildings should include halons (found in fire extinguishing) as a part of the inventory.

NOTE: The below listed chemicals are examples only, based on previous BellSouth Inventories. BST is still responsible for identifying chemicals used by specific work groups/buildings.

Building	Work Group	Hazardous Chemicals
Central Offices	Power	• Lead acid • Diesel fuel in storage tank
	Switching	• solvents • cleaners
Work Centers	Construction	• Encapsulants (BiphenY methane di-isocyanate

		(MDI) &polyurethane) • B-25 Epoxy Catalyst & Resin • C pressure testing Concentrate • Compound Plugging PR868
	Installation and Maintenance	• MAPP, Actylene, propane and gas • Nicad batteries • Lead acid batteries
Garages	Fleet	• oils , transmission fluid • solvents • cleaners • fuel
Administrative	Engineering	• same reproduction chemicals
All Buildings	Building Maintenance	• Zero ice melt • Genetron R-11 Refrigerant • Halons • Trichlorotrifluoroethane • Monoclorodiflouromethane • Molybdenum disulfide • Sodium hydroxide • Potassium hydroxide
Examples of Chemicals that DO NOT need to be inventoried	Any work group	• Pentel correction pens • Stamp pads • Glass cleaner • Liquid paper • Raid Ant & Roach spray • 3M desk cleaner • Lysol disinfectant • Liquid Paper thinner • Ajax • Keyboard cleaner • Baking soda • Typewriter ribbons

3.3 Inventory Process

The management of each department is required to make a physical inventory at each work location. All departments must complete the inventory, even if the inventory form states “nothing to report”. The following process applies to conducting the annual chemical inventory.

Step	Action
1	Human Resources and Corporate Services Environmental and Safety will be responsible for distributing the inventory forms to the departments in electronic form.

2	The supervisor/manager will inventory the chemicals used in their work functions
3	Once the inventory is complete the supervisor in each work group should keep a copy of their inventory and provide another copy to the Building Emergency Manager for that building
4	The Building Emergency Manager will compile all inventories with the other work group inventories and post on the official company bulletin board (see section 7.0)
5	Environmental and Safety will conduct random compliance reviews to determine adequacy in the inventory
6	Deficiencies in the inventory will be the responsibility of the deficient Department

NOTE: Different work groups in a building can elect to appoint a manager in the Building to manage this inventory collection and posting. However, each work group is ultimately responsible for training and the safe use of hazardous chemicals in their respective groups.

NOTE: It is permissible for a specific work group (such as fleet) to prepare a regional inventory indicating standard items purchased. Each location, however, is required to include any specific items used at that location.

4. Material Safety Data Sheets (MSDSs)

A “Material Safety Data Sheet” is the document used to convey chemical hazards to the Buyer and/or user of a product. It is prepared by the manufacturer after a thorough

4.1 Introducing MSDSs into BST

MSDSs are obtained through three primary sources. The sources are BST Procurement, BST purchases outside procurement (BST-other) and through BST vendors. The following table explains this process for each source.

Source	Process
BST Procurement	The BST Supply Chain Management organization is responsible for obtaining and reviewing the MSDSs on all products purchased by the Procurement department and forwarding it to Hazard Information Services (HIS).
BST – other	If products/chemicals are purchased outside of the BST Procurement Organization, the individual buyer/department

	of the chemical/product is responsible for obtaining theMSDS and forwarding it to HIS.
BST – Contract Vendors	The BST vendor manager is responsible for obtaining theMSDS from his/her vendors and forwarding them to HIS.

4.2 MSDS Database

BST maintains a complete database of all MSDSs, through an outside vendor. All MSDSs should be forwarded to *HIS* at the address listed below, for inclusion in the database.

Hazard Information Services

8100 34th Avenue South P.O. Box 2309 Minneapolis, MN 55440-1309

Reference – 'BellSouth Telecommunications' on the MSDSs

4.3 Obtaining MSDSs from the Database

HIS will provide MSDS via FAX 24 hours a day, 7 days a week. After making their Hazardous Chemical Inventory, managers/supervisors should use this service to obtain the appropriate MSDSs to ensure adequate training is performed on specific hazardous chemicals.

The process to obtain the MSDSs is as follows:

Step	Action
1	Call 1-800-743-MSDS (6737)
2	Tell the HIS responder you work for BellSouth as a vendor or an employee.
3	The responder will provide information on health/safety risks, as well as any first aid measures.
4	If the employee needs to review the MSDS, the responder will mail or fax the MSDS upon request
5	If there is an emergency need for the MSDS, make sure HIS understands to send immediately

NOTE: HIS is also available to BST employees to answer non-work related questions about hazardous chemicals.

4.4 Components of the MSDSs

The following table presents the components of the MSDS. For the purposes of The Hazard Communication Program training on specific chemicals, focus on the hazardous effects (3,4,5) and recommended protective measures (9).

Components	Description
1.Chemical Identity	includes any common names. If the product is a mixture, it must name all chemical and/or common names of all hazardous ingredients
2.Physical Characteristics	appearance, odor, boiling point, vapor pressure, flash point, etc.
3.Physical Hazards	potential for fire, explosion, or reactivity
4.Health Hazards	symptoms of exposure, and any medical conditions which could be aggravated by exposure
5.Primary Routes of entry into the Body	ABSORPTION caused by contact with the skin or eyes INHALATION by breathing the chemical or fumes INGESTION by eating or swallowing a chemical
6.Exposure Limits	the Permissible Exposure Limits (PEL), Short Term Exposure Limit (STEL) and the Threshold Limit Value (TLV) of the chemical product as recommended by the manufacturer
7.Carcinogen	whether or not the chemical has been found to be a known or potential carcinogen
8.Precautions	for Safe Handling, Spill Clean-Up, and disposal of the chemical or product
9. Control Measures	engineering controls, work practices, and or personal protective equipment (PPE) to be used
10. Emergency and First Aid	provides procedures for emergencies Note: BST employees should not perform any emergency procedures unless trained to do so. Call 1-800-743-MSDS for emergency chemical information or 911 for emergency services
11. Dates	Date of revisions of MSDS
12. Other Information	Name, Address, and telephone number of the chemical manufacturer, importer, or other responsible party preparing of distributing the MSDS.

5. Chemical Labeling

Chemical manufacturers, importers, and distributors will provide labels, tags and other suitable markings for all containers of hazardous chemicals shipped to any BST location by BST or by its vendors.

Every purchased container must be labeled. If materials are transferred by BST Employees or vendors into other containers, these containers must be labeled as well.

5.1 Required Information

The following information is required for chemical labeling before use by BST:

- identify of chemicals
- appropriate hazard warnings

- name and contract information of the chemical manufacturer, importer orother responsible party

Labels must be legible, in English and prominently displayed. There are no specific requirements for size or color,or any specified text.

5.2 Improperly marked containers

Follow these procedures when an improperly labeled chemical is discovered.

Step	Action
1	Once an improperly labeled chemical is discovered, do not use it
2	If the chemical is known, store the material in a secure location until an appropriate label can be acquired. Alternately, hand written label is acceptable, provide that the label is made with waterproof ink onto a permanent label.
3	If the material is unknown, assume the chemical is hazardous,store in the hazardous material disposition area and label as “Unknown”
4	Follow Hazardous Material Disposition procedures (see section 9.0)

NOTE: If a label becomes defaced or faded, it is acceptable to use an indelible marker to re-write the information on the label.

5.2 Mixing Chemicals

Employees may mix appropriate chemicals together in an unmarked container, or sprayer , for use on a single work shift basis. Examples of these solutions include: cleaning products, cable sealant, etc.

The following precautions should be followed:

- follow manufacturers direction for mixing
- use in a properly ventilated area
- use entire contents of mixture during the work shift. Do not carry over to the next work shift

6. Training

All employees will be trained on all hazardous chemicals which they will use in their work function before they are allowed to perform the work. Training will also be performed on every non-routine work task each time that task is to be performed. The following table represents the applicable training for Hazardous Communication Program. Each supervisor should determine the applicability of this training to their work group. Contact

the Area Safety Manager for assistance in this determination. All training should be documented on each employees safety training record. Employee training records should be made available to employee designated representatives upon written request.

Type of Training	Course Number	Objectives	Who gets it
Hazard Communication Training			
General Awareness	CTRS # SF305 Safety Subject	When new employees enter work force, or when new hazardous chemicals are used General provisions of Program: • Responsibilities • where to find inventory • how to obtain the MSDS information • how to obtain assistance or other I information about chemicals in the workplace	• All employees
Specific Chemica1 Training	Supervisor should use specific MSDS to train the employees	MSDS Information: • proper handling • appropriate PPE • health/safety risks • routes of entry • first aid procedures • disposal requirements Note: MSDS information may have several technical terms. For assistance in understanding these terms, contact the Area Safety Manager for Assistance.	• those exposed to specific chemicals on the Hazard Chemical Inventory
Annual Refresher (required if new chemicals are inventoried)	CTRS # SF305 Safety Subject 511 Specific chemical training	ete by the end of June of each year Review general awareness and specific chemical training. Incorporate changes in chemical use and inventory	• all employees and those exposed to specific chemicals as appropriate

		into training.	
Related Hazardous Material Training			
DOT Non-Transporter Training	SF 305N	• material classification • shipment preparation • handling and storage • emergency response	• employees that offer hazardous materials/waste for transportation • provide placarding/labeling • sign manifest
Type of Training	Course Number	Objectives	Who gets it
Related Hazardous Material Training			
DOT Non-Transporter Training	SF 305T	• material classification • shipment preparation • handling and storage • emergency response	• employees that transport certain DOT hazardous substances (Network Technicians) that exceed DOT quantities as stated in the "Materials of Trade" exemptions. See RL 97-07-005BT for information.

NOTE: Environmental Training for Hazardous Material Disposition is also available. Contact your supervisor, your Local Departmental Environmental Coordinator, or your Area Environmental Manager for information.

7. Posting of Information

A "Hazard Communication Notification" poster (Exhibit 1) must be displayed at each building which notifies employees of their "Right to Know" about the hazardous chemicals which might be present in the work place and informs them of the MSDS emergency number. The Environmental/Safety organization will be responsible for posting this information. Also required for posting are the completed inventories
(Exhibit 2) from each work group. The Building Emergency Manager is responsible for posting these inventories.

The "Right to Know" poster and all building chemical inventories will be posed on an official company bulletin board.

8. Contractors Responsibilities

8.1 Contract Language

Each contractor is to be notified that they must comply with Federal and State OSHA Regulations as well as company policy prior to working at a BST location. Contact the appropriate procurement organization to determine the appropriate contract language to be used.

8.2 BST to Contractor Communications

The responsible BST vendor manager must inform contractors of hazardous chemicals to which they may be exposed at BST locations.

Vendors may call the 1-800-743-MSDS number to obtain MSDSs on chemicals at BST locations. They must identify themselves as a BST vendor.

8.2 Contractor to BST Communciations

All contractors using hazardous chemicals at BST buildings and job sites, must comply with the following:

- submit copies of MSDSs for any hazardous materials they bring into BST premises to the Vendor Manager for the contract.
  - Proof of employee training may also be requested.
- when chemicals are used at BST buildings for construction, maintenance, or housekeeping purposes that are outside of routine chemicals used, the contract manager shall request that the vendor provide the MSDS and a Method of Procedure to BST 10 days prior to commencement of the activity that uses the chemical. The vendor may be asked to modify the planned activity (change schedule, change chemical, etc.) based on the potential effects the chemical might have to the occupants of the building. Examples of these activities include: painting, floor tile mastic removal using solvents, etc. The responsible vendor manager will then notify building occupants of this chemical use and modify work activities to limit exposure.

9. Hazardous Material Disposal

Should a chemical reach its limit of usefulness or if the chemical is unlabeled and therefore “unknown”, call the Building Service Center at the following numbers to arrange for disposition:

780-2740 (Florida, Georgia, North Carolina, South Carolina)

557-6194 (Alabama, Kentucky, Louisiana, Mississippi, Tennessee)

The Hazardous Material Disposition (HMD) group will provide the disposition service and coordinate with the local supervisor for assistance in pick-up, and proper documentation and handling.

Contact your Local Department Environmental Coordinator (LDEC)or your Area Environmental Manager (AEM) for assistance.

10. Hazard Communication Compliance Review

The Corporate Resources Environmental and Safety organization will utilize the information in Exhibit 3 to assess BST's compliance with this program.

Exhibit 1 – Notice of Hazard Communication Program

Exhibit 2 – Inventory Form – RF 1391 – Hazard Communication Checklist for Compliance

Exhibit 3 – Hazard Communication Checklist for Compliance

Exhibit 4 – Job AID

Program	Hazard Communication "Right to Know"
Purpose	to provide employees information about chemicals they are exposed to when working
Applicability – Functions	Work functions that use or are exposed to hazardous chemicals (does not apply to functions where chemicals remain sealed and are not opened)
Applicability-Chemicals	• inventory hazardous chemicals (chemicals that are corrosive, reactive, flammable or cause disease or injury) • inventory chemicals to which your work group is exposed • don't inventory items that don't release or otherwise result in exposure to ahazardous chemical under normal conditions – manufactured items) • don't inventory chemicals that are used like you would use it at home (bug spray, cleaners, etc. – these may have a UPC code) • don't inventory food, tobacco, cosmetics • don't inventory hazardous waste • don't inventory chemicals that are being

	warehoused and remain sealed	
To Learn More About A Chemical	Read the Material Safety Data Sheet (MSDS), ask your Supervisor, ask an Area Safety Manager, or call the 1-800-743-MSDS line	
How to get an MSDS	Call 1-800-743-MSDS (6737) Say you're a BellSouth employee or vendor	
What Do You Do With MSDS	Supervisor will use this to train their employees on specific Chemicals (pay attention to health affects, physical effects and how to protect yourself)	
Responsibilities	WHO	
	all employees and vendors	• keep chemicals labeled • follow chemical instructions
	supervisor	• inventory chemicals • perform on-the-job training sessions
	manufacturers of chemicals	• tell BST the Hazards of the products used • provide the MSDS to BST
	Environmental/Safety	• provide BST chemical info to vendor and obtain chemical info from vendors • ensures vendor chemical information is communicated to building occupants
ule	When	What
	By the end of June each year	• inventory chemicals
	When a new chemical is received for use (Complete by 6/30)	• train on use of specific Chemical
	Initially when a new employee starts a job	• train on Hazard Communication Program and on use of specific chemical
Posting		
Training	CTRS SF305 Safety Subject 511 Specific Chemical Training	

EXHIBIT F

SOLID AND HAZARDOUS WASTE MANAGEMENT

BellSouth Environment/Safety Management Solid and Hazardous Waste Management
Fact Sheet Index Issue Date: January 1, 2000 Page 1 0f 1

FACT SHEET #	TOPIC
17000	**HAZARDOUS MATERIAL/WASTE MANAGEMENT**
17100	**Hazardous Material/Waste Management Overview**
17101	• BellSouth Policy
17102	• Regulatory Overview
17103	• Environmental Terms and Definitions
17104	• Minimizing Hazardous Material/Waste
17200	**Recognizing Hazardous Materials and Wastes**
17201	• Recognizing Regulated Wastes
17202	• Recognizing Hazardous Materials
17203	• Recognizing Hazardous Wastes
17204	• Recognizing Universal Wastes
17205	• Obtaining an EPA Identification Number
17206	• Pre-Transportation Checklist for Hazardous Material/Waste
17300	**Hazardous Waste Generator Classifications**
17301	• Conditionally Exempt Small Quantity
17302	• Small Quantity
17303	• Large Quantity
17400	**Hazardous Material and Waste Storage**
17401	• Hazardous Material Storage Area
17402	• Hazardous Waste Storage Area
17403	• Hazardous Material Storage & Tracking Log
17404	• Hazardous Waste Storage & Tracking Log
17500	**Hazardous Material/Waste Spills/Releases**
17501	• Classifying a Spill
17502	• Selecting a Spill Kit
17503	• Spill Response Guidelines
17600	***Recordkeeping and Training Strategies***
17601	• Environmental Activity Reporting
17602	• Shipping Papers and Vehicle Placarding
17603	• Community Right to Know Reporters (EPCRA)
17604	• Document Retention
17605	• Hazardous Material/Waste Training
17700	**Exhibits**
17701	• Hazardous Material Storage & Tracking Log
17702	• Hazardous Waste Storage & Tracking Log
17703	• Pre-Transportation Checklist for Hazardous Material/Waste
17704	• Large Quantity Generator Report
17705	• Central Office Tear Out Report

BellSouth Environmental/Safety Management Hazardous Material/Waste Management
Summary Fact Sheet # 17400 Issue Date: January 1, 2000
Page 1 of 1

PROGRAM	**HAZARDOUS MATERIAL AND WASTE STORAGE:**	
DESCRIPTION	The purpose of this program is to provide instructions for the proper establishment and maintenance of a hazardous material and/or a hazardous waste storage area. Issues addressed include signage, container placement, container markings/labels, and storage-area inspection/ documentation.	
POLICY	It is the policy of BellSouth to comply with all federal, state and local environmental laws and regulations. Each employee is responsible for complying with this policy and ensuring compliance with specific methods and procedures implemented in support of this policy.	
COMPONENTS	This section has two main components: storing Hazardous Material, and storing Hazardous Waste. • **Hazardous Material**, for storage purposes, is any regulated product/material that is _not defined as a RCRA "hazardous waste." Included in this category are: * Batteries (except small alkaline) * PCB capacitors and lighting ballasts * Fluorescent lamps (used) * Radioactive devices (cathode tubes and certain smoke detectors) * Asbestos * Unknown material awaiting lab analysis results • **Hazardous Waste** is specifically defined by regulation. Examples of Hazardous Waste include the following: * Spent solvents * Certain parts washer fluids * Mercury relays/switches * Manhole sediment >- 5ppm lead	
	For More Information On:	**See the Following:**
	Hazardous Material Storage Area	Fact Sheet # 17401
	Hazardous Waste Storage Area	Fact Sheet # 17402
	Hazardous Material Storage & Tracking Log	Fact Sheet # 17403
	Hazardous Waste Storage & Tracking Log	Fact Sheet # 17404
SCOPE	Environmental regulations have the potential to impact all BellSouth activities, including the following: • Central Office operations • Fleet operations • Building maintenance • Outside plant operations	
REFERENCES	• Comprehensive Environmental Response, Compensation and Liability Act (CERCLA) • Superfund Amendments and Reauthorization Act (SARA) • Emergency Planning and Community Right to Know (EPCRA) • Environmental Terms and Definitions - Fact Sheet # 17103 • Hazardous Material Storage & Tracking Log (Exhibit) - Fact Sheet # 17701 • Hazardous Waste Storage & Tracking Log (Exhibit) - Fact Sheet # 17702	

BellSouth Environmental/Safety Management Hazardous Material/Waste Management
Detail Fact Sheet # 17401 Issue Date: January 1, 2000
Page 1 of 2

TOPIC DESCRIPTION	**HAZARDOUS MATERIAL STORAGE AREA** This Fact Sheet defines the application and requirements for establishing a hazardous material storage area.	
SCOPE	The Responsible Department (RD) is responsible for the establishment, maintenance, inspection and documentation of the hazardous material storage area. If the facility has more than one department, the predominate or designated department is responsible. If the facility is collocated with a Fleet garage operation, Fleet is responsible.	
RELATED DOCUMENTS	**For More Information On:**	See **the Following:**
	Hazardous Waste Generator Classifications	Fact Sheet # 17300
	Hazardous Material and Waste Storage	Fact Sheet # 17400
	Recordkeeping Strategies	Fact Sheet # 17600
	Hazardous Material Storage & Tracking Log	Fact Sheet # 17701
	Product/Material Disposal	Disposal Fact Sheets (Series 19000)
DEFINITIONS	• Hazardous material is generally defined as any chemical or a product that has the potential to cause harm to human health or the environment. A hazardous material can be new or used, but is generally associated with the management of used materials. For purposes of these Fact Sheets, the term hazardous material will apply to used material. • Universal waste is a special category of hazardous waste, which has been exempted from certain disposal requirements to promote recycling. For storage purposes, universal waste, with the exception of used fluorescent lamps, should be handled as a hazardous material. • For storage purposes, a hazardous material is any material not defined or regulated as a RCRA hazardous waste. Hazardous materials have also been referred to in the past as "other regulated waste."	
EXAMPLES	Hazardous materials commonly used/generated by BellSouth include: * Batteries (except small alkaline batteries) * Used motor oil and filters * PCB capacitors and lighting ballasts * Radioactive material (cathode tubes & certain smoke detectors) * Asbestos * Unknown material awaiting lab analysis results Note: See Disposal Fact Sheets for additional information for a specific product/material.	
REASONS FOR A STORAGE AREA	• A designated storage area is intended to warn people of the potential hazard and protect the material from damage or release during storage. • A temporary storage area should be established if hazardous material is to be stored for less than 60 days. • A permanent storage area should be established if the facility: * Generates hazardous material on a regular basis; or * Plans to store a hazardous material in excess of 60 days. Note: If the facility stops generating hazardous material and does not foresee a future need for at least a year, the storage area may be removed.	

BellSouth Environment/Safety Management **Solid and Hazardous Waste Management**

Summary Fact Sheet #17401 **Issue Date: January 1, 2000**

Page 2 0f 2

TYPES OF **STORAGE AREAS**	• Temporary Storage Area: * Indoor storage is preferred, however, if material is stored outside it may not be in direct contact with the ground/pavement and must be covered to ensure protection from the weather. * Adequate aisle space to allow for container inspection and/or managing leaking containers * Designated with marking tape, cones or barriers * "Hazardous Material Storage Area" and "No Smoking" signs are recommended, but not required • Permanent Storage Area: * Indoor storage is preferred, however, if material is stored outside it may not be in direct contact with the ground/pavement and must be covered to ensure protection from the weather. * Adequate aisle space to allow for container inspection and/or managing leaking containers. * Designated with marking tape/paint, cones or barriers * "Hazardous Material Storage Area" and "No Smoking" signs (Signs must be durable and readable from a minimum distance of 25 feet.) **• Fluorescent Lamp Storage Area:** * If a facility already has an established hazardous material storage area (temporary or permanent), used fluorescent lamps may be stored in the hazardous material storage area; or * Used fluorescent lamps, waiting recycling, may be stored in a designated area, i.e., janitorial closet or supply-room.
INSPECTIONS	The hazardous material storage area should be inspected at least monthly. It is a good practice to inspect the area designations/signs and containers every time material is placed into or removed from the area. Storage area inspections must be documented. Note: Inspections are not required if there is no material in the area to inspect. Note: Inspections of fluorescent lamps, stored in places other than the hazardous material storage, area are not required.
DOCUMENTATION AND TRACKING	To ensure proper management and control, all material moved into or from the storage area must be tracked. For regional consistency, it is recommended the *Hazardous Material Storage Area & Tracking Log* (Fact Sheet # 17701) be used. Regardless of the format, the following information is required: * Date material enters area * Description (e.g., lead acid battery) * Quantity entered (estimate) * Date of disposal request * Date shipped off-site * Name of disposal facility, if other than the BSC * Inspection date * Inspector's name/initials * Description of the deficiency * Action taken to correct deficiency * Date deficiency was corrected
DOCUMENTATION	All hazardous material related documents, logs, shipping papers, vendor receipts, etc. must be maintained in the facility's Hazardous Material/Waste Binder for five years.

BellSouth Environment/Safety Management **Solid and Hazardous Waste Management**
Summary Fact Sheet # 17402 **Issue Date: January 1, 2000**
Page 1 of 2

TOPIC DESCRIPTION	HAZARDOUS WASTE STORAGE AREA This Fact Sheet defines the application and requirements for establishing a hazardous waste storage area.	
SCOPE	The Responsible Department is responsible for the establishment, maintenance, inspection and documentation of the hazardous waste storage area. If the facility has more than one department, the predominate or designated department is responsible. If the facility is collocated with a Fleet garage operation, Fleet is responsible.	
RELATED DOCUMENTS	**For More Information On:**	**See the Following:**
	Environmental Terms and Definitions	Fact Sheet # 17103
	Hazardous Material Storage	Fact Sheet # 17401
	Recordkeeping Strategy	Fact Sheet # 17600
	Hazardous Waste Storage and Tracking Log	Fact Sheet # 17702
DEFINITION	A hazardous waste is generally defined as any chemical or product that has the potential to cause harm to human health or the environment and is to be discarded. Hazardous wastes are either EPA "listed waste",`EPA defined "characteristic waste," or classified hazardous waste through "generator knowledge." It is very important to make the distinction between a "waste" and a hazardous "material." Hazardous wastes are specifically regulated and affect your generator classification. Hazardous materials, even through they may adversely affect human health and the environment, do not affect your generator classification.	
EXAMPLES	BellSouth doesn't generate many hazardous wastes. Examples of hazardous waste include: * Used solvents * Used motor oil containing solvents * Mercury containing relays and switches * Antifreeze/coolant with 5 or more ppm lead * Oil/lead based paint Note: Some products/chemicals remain a hazardous waste even if recycled. See Disposal Fact Sheets (Section 19000) for additional information for a specific product/material.	
REASONS FOR A **STORAGE AREA**	• A designated storage area is intended to warn people of the potential hazard, facilitate tracking and protect the waste from damage. • A temporary storage area should be established if hazardous waste is to be stored for less than 60 days. • A permanent storage area should be established if the facility: * Generates hazardous waste, on a regular basis; or * A CESQG that plans to store a hazardous waste in excess of 60 days; or * Is classified as a SQG or LQG Note: If the facility no longer meets the requirements above, the permanent storage area may be removed. However, it is recommended the storage area remain in place if there is a possibility hazardous waste generation will resume within one year.	

BellSouth Environmental/Safety Management Hazardous Material/Waste Management
Summary Fact Sheet # 17402 Issue Date: January 1, 2000 Page 2 of 2

TYPES OF STORAGE AREAS -	• Temporary Storage Area: * Indoor storage is preferred, however, if material is stored outside it may not be in direct contact with the ground/pavement and must be covered to ensure protection from the weather. * Adequate aisle space to allow for container inspection and/or managing leaking containers. * Designated with marking tape, cones or barriers * "Hazardous Waste Storage Area" and "No Smoking" signs are not required, but are suggested. Signs must be durable and readable from a minimum distance of 25 feet. • Permanent Storage Area**:** * Indoor storage is preferred, however, if material is stored outside it may not be in direct contact with the ground/pavement and must be covered to ensure protection from the weather. * Adequate aisle space to allow for container inspection and/or managing leaking containers. * Designated with marking tape/paint, cones or barriers * "Hazardous Waste Storage Area" and "No Smoking" signs are required. Signs must be durable and readable from a minimum distance of 25 feet.
INSPECTIONS	The hazardous waste storage area must be inspected according to the facility's Hazardous Waste Generator Classification. * CESQG – monthly * SQG – weekly * LQG – weekly Note: It is a good practice to inspect the area designations, signs and containers every time material is placed into or removed from the area.
DOCUMENTATION AND TRACING	To ensure proper management and control, all waste moved into or from the storage area must be tracked For regional consistency, it is recommended the *Hazardous Waste Storage & Tracking Log* (Fact Sheet 17702) be used. Regardless of the format, the following information is required: * Date waste enters area * Description (erg., mercury relays) * Quantity entered * Date of disposal request * Date shipped off-site * Name of disposal facility, if other than the BSC * Inspection date * Inspector's name/initials * Description of the deficiency * Action taken to correct deficiency * Date deficiency was corrected
DOCUMENTATION	All hazardous waste related documents, logs, manifests, "Land Ban" forms, etc. must be maintained in the facility's Hazardous Material/Waste Binder for five years.

BellSouth Environmental/Safety Management **Hazardous Material/Waste Management**
Summary Fact Sheet # 17403 **Issue Date: January 1, 2000**

Page 1 of 1

TOPIC DESCRIPTION	**HAZARDOUS MATERIAL STORAGE & TRACKING LOG** This Fact Sheet identifies the required information necessary to ensure proper documentation of a hazardous material storage area.	
SCOPE	To ensure compliance with certain regulations and best management practices, a tracking mechanism is required. Although the accumulation of hazardous material is not regulated like hazardous waste, it still presents a potential environmental and health hazard. Hazardous material may be stored for up to one year, however, it should not be stored longer then economically feasible. Fact Sheet # 17701 provides a convenient way to track hazardous material accumulation, storage, disposal and storage area/container conditions. The Responsible Department is responsible for the establishment, maintenance, inspection and documentation of the hazardous material storage area. If the facility has more than one department, the predominate or designated department is responsible. If the facility is collocated with a Fleet garage operation; Fleet is responsible. **Note:** There is a separate log for hazardous waste storage (Fact Sheet # 17702) **Note**: This log is not required for fluorescent lamps waiting recycling, unless the facility also aggregates lamps from other facilities and ships directly to a lamp recycler.	
RELATED DOCUMENTS	**For More Information On:**	**See the Following:**
	Recognizing Hazardous Materials	Fact Sheet # 17202
	Hazardous Material Storage Area	Fact Sheet # 17401
	Hazardous Material Storage & Tracking Log (Exhibit)	Fact Sheet # 17701
***REQUIRED* INFORMATION**	Required information and suggested log completion instructions: • **Section I:** Enter: Facility Name Enter: Geographic Location Code (GLC) • **Section II**: Column 1: Brief description of the material, i.e., used motor oil, lead acid batteries Column 2: Quantity of material, i.e., count, weight and/or volume *Column 3: Date material is placed into storage Column 4: Date disposal request is made, i.e., date called into BSC *Column 5: Date material is shipped off-site Column 6: Name of disposal facility, if other than the BSC • **Section III**: Column 1: Date storage area is inspected. Column 2: Inspectors initials Column 3: Describe deficiencies, i.e., bung plug on drum of used oil loose Column 4: Describe corrective action, i.e., tightened bung plug Column 5: Date deficiency corrected	
INSPECTIONS	The Hazardous Material Storage Area should be inspected at least monthly. If there is no material stored, an inspection is not necessary.	
DOCUMENTATION	The current Hazardous Material Storage & Tracking Log may be kept at the storage area or in the facility's Hazardous Material/Waste Binder. Completed copies must be filed in the Hazardous Material/Waste Binder for at least five years.	

BellSouth Environmental/Safety Management **Hazardous Material/Waste Management**
Summary Fact Sheet # 17404 **Issue Date: January 1, 2000**

Page 1 of 1

TOPIC ***DESCRIPTION***	**HAZARDOUS WASTE STORAGE & TRACKING LOG** This Fact Sheet identifies the required information necessary to ensure proper documentation of a hazardous waste storage area.	
SCOPE	To ensure compliance with regulations and best management practices, a tracking mechanism is required. The storage of hazardous waste is regulated depending on the facility's generator classification. The facility's classification is dependent on the amount of hazardous waste generated, per month; consequently, the generation rate must be Documented. This log provides a convenient way to track hazardous waste accumulation, storage, disposal and storage area/container condition. The Responsible Department (RD) is responsible for the establishment, maintenance, inspection and documentation of the hazardous waste storage area. If the facility has more than one department,, the predominate or designated department is responsible. If the facility is collocated with a Fleet garage operation; Fleet is responsible. **Note:** There is a separate log for hazardous material storage (Fact Sheet # 17701)	
RELATED **DOCUMENTS**	For **More Information On:**	**See the Following:**
	Environmental Terms and Definitions	Fact Sheet # 17103
	Recognizing Hazardous Materials	Fact Sheet # 17202
	Hazardous Waste Storage & Tracking Log (Exhibit)	Fact Sheet # 17702
REQUIRED **INFORMATION**	Required information and suggested log completion instructions: • **Section I:** * Enter: Facility Name * Enter: Geographic Location Code (GLC) • **Section II:** * Column 1: Brief description of the waste, i.e., mercury relays, spent solvent * Column 2: Quantity of waste, i.e., count, weight and/or volume * Column 3: Date waste is placed into storage * Column 4: Date disposal request is made, i.e., date called into BSC * Column 5: Date waste is shipped off-site * Column 6: Name of disposal facility, if other than the BSC • **Section III:** * Column 1: Date storage area is inspected. * Column 2: Inspectors initials * Column 3: Describe deficiencies, i.e., bung plug on drum of solvent loose * Column 4: Describe corrective action, i.e., tightened bung plug * Column 5: Date deficiency corrected	
INSPECTIONS	The Hazardous Waste Storage Area must be inspected based on the facility's generator Classification, with a monthly minimum. If there is no waste stored, it is suggested the storage area designation and signage be inspected monthly, for all classifications.	
DOCUMENTATION	The current Hazardous Waste Storage & Tracking Log may be kept at the storage area or in the facility's Hazardous Material/Waste Binder. Completed copies must be filed in the Hazardous Material/Waste Binder for at least five years.	

BellSouth Environmental/Safety Management **Hazardous Material/Waste Management**
Summary Fact Sheet # 17500 **Issue Date: January 1, 2000**

Page 1 of 1

TOPIC	***HAZARDOUS WASTE MATERIAL/WASTE SPILLS AND RELEASES***	
DESCRIPTION	This program pertains to the management of incidental spills or releases of hazardous materials and wastes. The key to spill prevention is advance planning. In all spill situations, time is of the utmost importance. Without advanced planning, training and practice employees will not be able to respond properly. **Note**: For purposes of the section, the term "spill" will denote a spill or release	
POLICY	It is the policy of BellSouth to comply with all laws and regulations pertaining to the proper and timely cleanup and reporting of hazardous material and waste spills.	
COMPONENT	**For More Information** On:	**See the Following:**
	Classifying a Spill	Fact Sheet # 17501
	Selecting a Spill Kit	Fact Sheet # 17502
	Spill Response Guidelines	Fact Sheet # 17503
SCOPE	Proper spill response is a combination of common sense and technical training. The user of the chemical is usually the one that spills it. These individuals are knowledgeable of the material and should be able to handle the cleanup. However, if you discover a spill and are not familiar with the chemical, not adequately trained, or do not have the proper cleanup tools, do not attempt to clean it up. Immediately call for assistance. Always use appropriate personal protective equipment (PPE). There is the potential to have a hazardous material/waste spill/release at most any facility or while conducting field operations. The more common operations include: • Fuel delivery and storage • Vehicle maintenance • Building maintenance • Outside plant operation Note: The RD is responsible for funding cleanup activities.	
REFERENCES	• Comprehensive Environmental Response, Compensation and Liability Act (CERCLA) • Superfund Amendments an Reauthorization Act (SARA) • Emergency Planning and Community Right to Know (EPCRA)	

BellSouth Environmental/Safety Management **Hazardous Material/Waste Management**
Summary Fact Sheet # 17501 **Issue Date: January 1, 2000**

Page 1 of 2

	CLASSIFYING A SPILL			
DESCRIPTION	This Fact Sheet provides guidance on classifying a spill or release (spills) of a hazardous material, universal waste or hazardous waste. The location, amount and type of material spilled will influence cleanup and reporting procedures.			
SCOPE	A spill can occur anytime a hazardous material/waste is handled, transported or stored. The Responsible Department (RD) is responsible for managing spills, including initial cleanup of small spills, storage of contaminated material and associated debris, and proper disposal. Note: All employees are responsible for reporting spills, however, only trained individuals should attempt to cleanup a spill of hazardous material/waste.			
RELATED DOCUMENTS	**For More Information On:**	See **the Following:**		
	Environmental Terms and Definitions	Fact Sheet # 17103		
	Recognizing Hazardous Material and Wastes	Fact Sheet # 17200		
	CESQG Facilities	Fact Sheet # 17301		
	SQG Facilities	Fact Sheet # 17302		
	LQG Facilities	Fact Sheet # 17303		
SPILL CLEANUP TRAINING	Employees should only attempt to clean-up spills of chemicals that they are familiar with, and for which they have received spill response training. Hazard Communication training (HAZCOM) and spill response training is essential before attempting to respond to any spill. Most employees will receive spill clean-up training/retraining as part of their annual HAZCOM training, and then only for those chemicals they can reasonably be expected to handle during the course of their normal job. Departments or facilities may choose to implement more extensive spill response training. Note: Each RD should obtain approval from the Occupational Health and Safety organization before proceeding with heightened response plans.			
SPILL CLASSIFICATION	The following classifications are for the internal management of spills.			
	TYPE	**QUANTITY**	**CHARACTERISTICS**	**RESPONSE**
	Incidental ***Type I***	less than 1 gallon	- small puddle - up to 3 feet in diameter - contained in building	- cleanup at facility - document cleanup in Hazardous Material/Waste Management Binder
	Incidental ***Type II***	greater than 1 gallon less than 25 gallons	- moderate potential to enter the environment - possibly too big to cleanup with site spill kit - puddle up to 50 feet in diameter	- possible cleanup at facility, - report and/or request assistance from the BSC - document cleanup in Hazardous Material/Waste Management Binder

BellSouth Environmental/Safety Management **Hazardous Material/Waste Management**
Summary Fact Sheet # 17500 **Issue Date: January 1, 2000**

Page 2 of 2

SPILL CLASSIFICATION (continued) --	Significant ***Type III*** -	greater than 25 gallons, or any amount of asbestos, PCB	- too large a spill to cleanup with site spill kit - great potential to enter the environment, or - has already entered the Environment	- call the BSC; a qualified contractor should handle this release - document cleanup in Hazardous Material/Waste Management Binder.
	Note: Some states require reporting petroleum spills of any quantity, which are not contained within a building. Check with your LDEC or AEM for additional information on state specific requirements.			
***COMMON TYPES* OF SPILLS**	**• Petroleum Products** * Diesel fuel * Gasoline * Motor oil **• Antifreeze** * Motor vehicles * Standby engines **• Acids/Caustics** Motor vehicle batteries * Engine start batteries Emergency lighting * Central office batteries • PCBs * Lighting ballasts * Capacitors * Transformers		**• Mercury** * Relays/switches * Circuit boards * Manometers * Thermometers **• Asbestos** * Thermal insulation * Transite board/conduit * Floor tiles/mastic * Wallboard	

BellSouth Environmental/Safety Management **Hazardous Material/Waste Management**
Summary Fact Sheet # 17502 **Issue Date: January 1, 2000**

Page 1 of 3

TOPIC	***SELECTING A SPILL KIT***		
DESCRIPTION	This Fact Sheet provides guidance for selecting a spill kit. Spill kit selection should be based on specific applications and spill potential.		
SCOPE	The Responsible Department (RD) is responsible for ensuring that proper and adequate spill kits are readily available for use. All employees expected to respond to a spill must have received the appropriate spill response training for that particular hazard. Each kit should be externally marked to readily identify its application, i.e., marked "Hydrocarbon Spill Kit." Spill kits should be stored in doors or otherwise protected form the weather.		
RELATED	**For More Information On:**	See the Following:	
DOCUMENTS	Environmental Terms and Definitions	Fact Sheet # 17103	
	Recognizing Hazardous Material and Wastes	Fact Sheet # 17200	
	Hazardous Waste Generator Classifications	Fact Sheet # 17300	
	Employee Safety	BSAPP	
SPILL KIT TYPES	The following are examples of hazardous material and suggested spill kit types.		
	Facility	**Hazardous Material**	**Suggested Spill Kit**
	Central Office	Lead Acid Battery Acid	Acid Neutralizing Kit
		Diesel Fuel	Hydrocarbon Spill Kit
		Oil	Hydrocarbon Spill Kit
	Garage	Lead Acid Batteries	Acid Neutralizing Kit
		Oil	Hydrocarbon Spill Kit
		Fuel	Hydrocarbon Spill Kit
		Antifreeze	Hydrocarbon Spill Kit
		Solvents	HazMat Spill Kit
	Work Center	Lead Acid Battery	Acid Neutralizing Kit
		Fuel	Hydrocarbon Spill Kit
		Ni-Cad Battery	Alkaline Neutralizing Kit
		Solvents	HazMat Spill Kit
		Hydraulic Fluid	Hydrocarbon Spill Kit
	Warehouses	Solvents	HazMat Spill Kit
		Fuel	Hydrocarbon Spill Kit
		Lead Acid Battery	Acid Neutralizing Kit
		Oil	Hydrocarbon Spill Kit
		PCBs	PCB Spill Kit
		Ni-Cad Battery	Alkaline Neutralizing Kit
		Mercury	Mercury Spill Kit
		Other Hazardous Materials	HazMat Spill Kit
	Administrative Buildings and Data Center Data	Solvents	HazMat Spill Kit
		Fuel	Hydrocarbon Spill Kit
		Lead Acid Battery	Acid Neutralizing Kit
		Oil	Hydrocarbon Spill Kit
		Antifreeze	Hydrocarbon Spill Kit

BellSouth Environmental/Safety Management **Hazardous Material/Waste Management**
Summary Fact Sheet # 17502 **Issue Date: January 1, 2000**

Page 2 of 3

***LOCATION* AND SIZE OF SPILL KITS**	The location and size of the spill kit is determined by the quantity of the hazardous material on-site, as well as the characteristics of the material itself. Following are some examples of typical spill kits and suggested locations:		
	Material	Kit Location	Quantity/Type
	Lead Acid batteries	All facilities: near batteries	C.O.: 1-30 gallon acid spill kit w/45 gal. neutralizer, or lbs. dry absorbent w/tools; OSP: 1-5 gal. kit w/30 qts. neutralizer, or 30 lbs dry w/tools.
	Caustic Batteries (Ni-Cad)	All facilities: near batteries	C.O.: 1-30 gal. alkaline kit w/45 gal. neutralizer; OSP: 1-5 gal. kit w/7.5 gal, neutralizer
	Fuel	CO: engine Room SOC: storeroom Garage: work area	1-30 gallon hydrocarbon spill kit 1-30 gallon hydrocarbon spill kit 1-30 gallon hydrocarbon spill kit
	Used Oil	CO: engine room Garage: work area	1-30 gallon hydrocarbon spill kit 1-30 gallon hydrocarbon spill kit
	Antifreeze	CO: engine room Garage: work area	1-30 gallon hydrocarbon spill kit 1-30 gallon hydrocarbon spill kit
	Solvents	All facilities: work area	1-10 gallon hazmat spill kit
ORDERING SPILL KITS	The following spill kits and replacement components may be ordered from central purchasing catalog.		
	Spill Kit Name	***Size***	**PID Number**
	Acid Neutralizing Kit	30 gallon w/out liquid neutralizer	642960264
		5 gallon w/out liquid neutralizer	643960263
		7 qts. liquid neutralizer	645960261
		301bs dry neutralizer w/tools	644960262
	Hydrocarbon Kit	30 gallon	632960266
		5 gallon	633960265
		Absorbent socks only	634960264
	HazMat Kit	30 gallon	632960266
		5 gallon	633960265
	Alkaline Neutralizing Kit	30 gallon and 5 gallon w/out neutralizer	See Acid Kit
		7 qts. liquid neutralizer	646960260

BellSouth Environmental/Safety Management **Hazardous Material/Waste Management**
Summary Fact Sheet # 17502 **Issue Date: January 1, 2000**

Page 3 of 3

CONTENTS OF **SPILL KITS**	Certain types of equipment/material are necessary to properly respond to a spill. This equipment/material does not have to be in the actual spill kit, however, it must be at the facility/ facility complex and readily available. The suggested material/equipment includes, but is not limited to the following:	
	TYPE	**DESCRIPTION**
	Absorbents, Neutralizers or Adsorbents	• Clay, organic absorbing mats, and booms • Neutralizing agents for acids and bases • Absorbent pillows/blankets • Oil dry
	Tools	• Spark resistant shovels, brooms, mops, pails, and squeegees
	Supplies	• Containers * Open top and bung top 55-gallon drums * Overpack drums (85-gallon) • Containment booms, absorbent pads and pillows • Labels, signs
	Personal Protective Equipment (PPE)	• Protective gloves • Safety glasses/Splash-proof chemical goggles • Aprons • Rubber overshoes or boots Note: PPE that employees routinely use in their work operation is generally adequate. However, all OSHABSAPP required PPE must be on site and readily available.
	Note: Respirator use should be limited and only used as specifically outlined in site specific plans that provide detailed training in their use. Additionally, their use should not be implemented without prior approval from Occupational Safety and Health.	
SPILL KIT ***LABELING/*** **SECURITY**	Spill kits should be labeled as to their intended use, e.g., "Acid Neutralizing Spill Kit" and type II, of neutralizer, if applicable. To ensure spill kit integrity, spill kits should be sealed and secured '~, with a plastic tie or metal band. It is not necessary to list the spill kit contents on the outside label.	
SPILL KIT INSPECTION	It is recommended spill response supplies be inventoried at least monthly to insure all supplies are present and in good condition. If the kit is secured, it is not necessary to open for inspection. Replenish missing/inoperable supplies as soon as possible.	

BellSouth Environmental/Safety Management **Hazardous Material/Waste Management**
Summary Fact Sheet # 17503 **Issue Date: January 1, 2000**

Page 1 of 2

TOPIC	**SPILL RESPONSE GUIDELINES**		
DESCRIPTION	'This Fact Sheet identifies the proper generic sequence of actions (guidelines) to take when responding to an incidental spill. Remember that these are only basic guidelines and are not intended to be comprehensive or all-inclusive. In a spill situation, a responder often must perform several of these steps almost simultaneously and without having to think about them. In other words, proper training should make these guidelines second nature.		
SCOPE	The Responsible Department (RD) is responsible for ensuring all spills are properly handled, reported and documented, in a timely manner. Trained employees are expected to respond to small incidental spills.		
RELATED	**For More Information On:**		**See the Following:**
DOCUMENTS	Environmental Terms and Definitions		Fact Sheet # 17103
	Hazardous Waste Generator Classification		Fact Sheet # 17300
	Product/Material Disposal		Disposal Fact Sheets (Series 19000)
	Employee Safety		BSAPP
GUIDELINES	**Step**	**Action**	
	1	**Identify What Was Spilled and How Much**. Determine the content and hazard of the material, and the size of the spill. If the material is flammable or combustible, remove all ignition sources. Stop the flow of the spill if it can be done safely. This will enable the appropriate individuals to prepare for cleanup.	
	2	***Make Notifications IMMEDIATELY!*** **INTERNAL**: If spill is greater than 1 gallon, CALL THE BSC: 780-2740; 557-6194 **EXTERNAL**: Will vary depending on spill type/size and the seriousness of the spill • Emergency services notifications (fire, medical) should occur according to normal operating procedures found in Emergency Operations Plan • The BSC will notify Environment/Safety Management • Environment/Safety Management will notify and report to the appropriate environmental regulatory agencies, as required.	
	3	**Secure the Area and Warn Others**. In case of a spill, use supplies from the spill kit to rope off the area with tape, signs, etc. Use readily accessible supplies such as chairs, cones, etc., to provide barricades to the area. Keep people clear of area.	
	4	**Stop and Evaluate**. If you are trained and equipped to address the spill of this material, proceed to step 5. If *you are not trained or equipped to handle this spill and unable to find someone who is trained; move away, ensure area remains secured; remain available until spill is under control; and follow-up with the BSC*.	
	5	**Get Appropriate Personal Protective Equipment (PPE)** approved by OHS. Use only approved/authorized PPE.	
	6	**Contain the Spill.** Use contents of spill kit to dike around spill area. Cover, plug or otherwise seal off all drains which could potentially be affected by the spill or leak.	
	7	**Stop the Spill at its Source**. Plug drums, close valves, etc.	

BellSouth Environmental/Safety Management **Hazardous Material/Waste Management**
Summary Fact Sheet # 17503 **Issue Date: January 1, 2000**

Page 2 of 2

GUIDELINES (continued)	**8**	**Neutralize/Absorb Material**. Use the appropriate spill kit and instructions to Neutralize/absorb the spill.
	9	**Cleanup**. Once a spill has been absorbed and/or neutralized, cleanup by placing the used spill kit materials into the appropriate disposal containers. Thoroughly clean area with additional absorbent/neutralizer.
	10	**Properly Dispose of Contaminated Materials**. Refer to the appropriate Disposal Fact Sheet for the correct disposal method and procedures.
	11	**Document**. Record spill event details and response effort, as appropriate
	12	**Replace Spill Kit.** Order replacement spill kit supplies, as necessary.

***REPORTING* TO THE BSC**

When the release is more than one gallon of hazardous material/waste, a call must be made to the BSC. This call is for the purpose of notification and possible dispatching of cleanup vendor via the AEM.
When initially reporting a spill, be prepared to give the BSC the following information:
Facility's GLC
***** Your name, title, department and contact number.
***** Street address of facility
* Specify this is an "environmental spill"
* Exact location of spill within facility
* Identify and quantify material spilled (information from MSDS, if available)
* Emergency responders called, i.e., fire department or ambulance, if applicable
* Number of injuries and status of condition
* Status of spill containment
* Date and time spill was discovered
* Additional help needed
* Advise the BSC when the incident has been resolved

***DISPOSAL OF* CLEANUP MATERIALS**

The absorbent/neutralizer used to cleanup a spill may take on the characteristics of the spilled material, consequently, it may be considered a hazardous waste. The following are some common examples:

Spill Type / Residue	**Type Waste**	**What To Do**
Lead Acid Battery Spill/ Neutralizing Material	Solid waste, if neutralized	Dispose in dumpster, if acceptable to trash vendor
	Hazardous waste, if not neutralized	Handle as a hazardous waste
Gasoline / Absorbent	Hazardous waste, if ignitable	Handle as a hazardous waste
Oil or Diesel Fuel / Absorbent	Solid waste, if not dripping	Dispose in dumpster, if acceptable to trash vendor
	Hazardous waste, if dripping	Handle as a hazardous waste
Caustic Battery Spill/ Neutralizing Material	Solid waste, if neutralized	Dispose in dumpster, if acceptable to trash vendor
	Hazardous waste, if not neutralized I	Handle as a hazardous waste

BellSouth Environmental/Safety Management **Hazardous Material/Waste Management**
Summary Fact Sheet # 17600 **Issue Date: January 1, 2000**

Page 1 of 1

PROGRAM	***RECORDINGKEEPING AND TRAINING STRATEGIES***	
DESCRIPTION	This program identifies the record-keeping and training strategies associated with the management of hazardous material and hazardous waste.	
POLICY	It is the policy of BellSouth to comply with all federal, state and local environmental laws and regulations. Each employee is responsible for complying with this policy and ensuring compliance with specific methods and procedures implemented in support of this policy.	
COMPONENTS	**For More Information On:**	See **the Following:**
	Environmental Activity Reporting	Fact Sheet # 17601
	Shipping Papers and Vehicle Placarding	Fact Sheet # 17602
	Community Right to Know Reporters (EPCRA)	Fact Sheet # 17603
	Document Retention	Fact Sheet # 17604
	Hazardous Material/Waste Training	Fact Sheet # 17605
SCOPE	One of the more important aspects of hazardous material and hazardous waste management is Record-keeping and document retention. Regulations require each company to be able to Prove its hazardous material and waste handling activities are in compliance. Good Record-keeping and training are also effective means of reducing the company's environmental liability. Most environmental citations involve failure to report an activity, improperly prepared reports, forms or record retention. In addition to record-keeping, each employee that uses or handles hazardous material/waste, i.e., shipping, storage, spill response, disposal, etc. must be adequately trained.	
***DOCUMENT* STORAGE**	For the most part, documents must be maintained at the generating facility. Maintaining the facility's environmental documentation in a central place will ensure timely and efficient document retrieval. To facilitate document access/review, records must be readily accessible. It is recommended that all hazardous material/waste related documents be maintained in the facility's Hazardous Material/Waste Management Binder and that the Binder be stored as follows:	
	Type Facility	**Storage Location**
	Central Office	Near hazardous material/waste storage area.
	Administrative Building or Regional Data Center	Near hazardous material/waste storage area or in building maintenance contractor's office area
	SOC	Near the hazardous material/waste storage area or in wall-holder at entrance door.
	Garage	Office area

BellSouth Environmental/Safety Management Hazardous Material/Waste Management
Summary Fact Sheet # 17601 Issue Date: January 1, 2000 Page 1 of 2

TOPIC **PURPOSE**	***ENVIRONMENTAL ACTIVITY REPORTING*** The purpose of this Fact Sheet is to identify the requirements associated with environmental "Activity Reporting" to Environmental/Safety (E/S).	
SCOPE	Activity reporting is necessary to document hazardous material and hazardous waste activities and management compliance. Whenever an activity occurs which could have regulatory implications, it is very important that the appropriate federal, state and/or local regulatory officials are notified. To streamline the process and to ensure that consistent and correct communications exist between the regulators and the company, E/S will serve as the official governmental interface. More specifically, the Area Environmental Manager (AEM) and/or the Technical Program Manager (TPM) will fulfill this task. To comply with this reporting requirement, it is imperative that each Responsible Department (RD) submit all required hazardous material/waste management activity reports correctly and in a timely manner. Activity reports may be directly input into the official database or submitted to the AEM with responsibility for that facility. When a facility has multiple departments, it is important that all reporting be processed in a unified manner - remember environmental compliance is location specific, not department specific. • An activity report may consist of any of the following: Completed paper/electronic form * E-mail * Direct data entry or a mechanized system download to the BellSouth Environmental/Safety Tracking (BEST) system • Examples of activity reporting include, but are not limited to, the following: * Central office battery additions, deletions or changes * Hazardous waste disposal * Central office equipment tear outs * Change in Hazardous Waste Generator classification * Spills/release reporting * Regulatory citations/fines/penalties * Corrective action plan associated with environmental deviations * Waste minimization activities	
RELATED	**For More Information On:**	**See the Following:**
DOCUMENTS	Environmental Terms and Definitions	Fact Sheet # 17103
	Recognizing Hazardous Materials/Wastes	Fact Sheet # 17200
	Hazardous Waste Generator Classifications	Fact Sheet # 17300
	Hazardous Material/Waste Spill/Releases	Fact Sheet # 17500
HAZARDOUS WASTE GENERATOR REGISTRATION REQUEST (EPA ID#)	The following information is required for new registrations and changes in generator classifications. The preferred method of data transmittal is e-mail. * Facility GLC or official identification * Date of request * Requestor (name, title, department and contact #) * Reason for the request (new/eliminated process, spill response, etc.)	

BellSouth Environmental/Safety Management **Hazardous Material/Waste Management**
Summary Fact Sheet # 17601 **Issue Date: January 1, 2000**

Page 2 of 2

***HAZARDOUS* WASTE GENERATOR REGISTRATION REQUEST (continued)**	* Current EPA ID # and Generator Classification (SQG or LQG) * Waste streams (new, existing and deletions) * EPA 'Waste code for each waste stream, if known * Total waste, in pounds, generated per calendar month (known or estimated) * If facility no longer generates hazardous waste, provide date generation stopped Note: An EPA ID # is not required, nor suggested for CESQG classifications
NOTICE OF CENTRAL OFFICE EQUIPMENT REMOVAL	The following information is required when removing (tear-out) central office or other electronic equipment containing hazardous material/waste. The preferred method of data transmittal is e-mail. * Facility GLC * Date of request * Facility contact name, title and number * Description of hazardous material/waste to be removed, i.e., mercury relays * Estimated quantity, by type, to be generated during a calendar month Note: The RD is responsible for ensuring the above information is submitted to E/S, 30 days prior to beginning any hazardous waste removal work.
HAZARDOUS MATERIAL/ WASTE DISPOSAL	Disposal of hazardous material/waste requires an Activity Report. If disposal is via BSC/ HMD, the BSC will forward the required information to the AEM. If the BSC/HMD is not used, the RD is responsible for Activity Reporting. The preferred method of data transmittal is e-mail. The following information is required: * Facility GLC * Date of request * Facility contact name, title and telephone number * Facility's Generator Classification and EPA ID#, i.e., CESQG, SQG, LQG. * Description of hazardous material/waste, i.e., mercury relays, batteries, etc. * Known/estimated weight of material by type Note: For hazardous waste disposal, copies of the Uniform Hazardous Waste Manifest and Land Disposal Restriction form must be forwarded to the AEM. Original copies must be filed in the facility's Hazardous Material/Waste Management Binder.
CHEMICALS (SARA)	The addition, deletion or change in reportable chemicals must be reported to the Local Emergency Planning Committee (LEPC) via the Tier II Report. The RD is responsible for providing MSDS and chemical quantities to E/S for data entry.
BATTERIES (SARA)	The addition or deletion of sulfuric acid (lead acid batteries) must be reported to the LEPCs via the Tier II Report. The RD is responsible for inputting the following data into the BellSouth Environmental/Safety Tracking (BEST) system. • Name of manufacturer (optional) • Model number • List number • Quantity of batteries involved • Location within building Note: Mechanized data entry, i.e., AMPEERS, is acceptable if authorized by the E/S Information Manager

BellSouth Environmental/Safety Management **Hazardous Material/Waste Management**
Summary Fact Sheet # 17602 **Issue Date: January 1, 2000**

Page 1 of 2

TOPIC ***DESCRIPTION***	**SHIPPING PAPERS AND VEHICLE PLACARDS** This Fact Sheet provides instructions on preparing shipping papers associated with shipments of hazardous material, hazardous waste and universal waste.	
SCOPE	Shipping paper preparation and use is generally regulated by the DOT. However, the EPA regulates certain shipping papers associated with hazardous waste. The "shipper" (person offering the material for shipment) is personably responsible and liable for ensuring all required information is provided and that it is correct. • Shipping papers serve the following basic functions: Identifies the shipper and receiver * Describes the material being shipped * Warns the transporter and receiver of potential hazards * Provides emergency contact information * Provides for material receipt and tracking • Vehicle placards serve two basic functions: * Warns the general public of potential chemical hazards * Identifies chemical hazards to emergency responders **Note**: If you do not have first hand knowledge of the material being shipped, Do Not sign the shipping papers. **Note**: Shipping papers for hazardous material/waste must remain with the driver or in the Vehicle at all times.	
RELATED	**For More Information On:**	**See the Following:**
DOCUMENTS	Environmental Terms and Definitions	Fact Sheet # 17103
	Recognizing Hazardous Material	Fact Sheet # 17202
	Recognizing Hazardous Waste	Fact Sheet # 17203
	Recognizing Universal Waste	Fact Sheet # 17204
	Pre-Transportation Checklist	Fact Sheet # 17206
	Product Description	MSDSs
	Product/Material Disposal	Disposal Fact Sheets (Series 19000)
HAZARDOUS MATERIALS	The transportation of hazardous materials is regulated by DOT. A "Hazardous Material Bill-of-Lading" (BOL) is required for shipments of hazardous materials. A BOL must: • be typed or legibly printed in English • contain the "Proper DOT Shipping Description" (shipping description must include in the proper order: the hazard class, UN/NA identification number and the packing group) • list all hazardous materials first or in contrasting color • have an "X" in the RQ column, as appropriate • Contain a 24 hour emergency contact number • be signed by the shipper Note: It is the shipper's responsibility to ensure the BOL is complete and correct.	

BellSouth Environmental/Safety Management **Hazardous Material/Waste Management**
Summary Fact Sheet # 17602 **Issue Date: January 1, 2000**

Page 2 of 2

HAZARDOUS ***WASTES***	A "Uniform Hazardous Waste Manifest" (UHWM) is required by the EPA for hazardous waste shipments. The UHWM is a closed-loop document and a signed copy must be returned to the shipper. In addition to the BOL requirements, a UHWM must include the following: * The word "waste" at the beginning of the shipping description, as applicable * Quantity and type containers * Generator signature certifying the generator has a waste minimization plan in effect, as required * Name and signature of each transporter * Designated disposal facility (A hazardous waste may not be delivered to any facility other than the one identified by the shipper) * Signature of the receiving Treatment Storage and Disposal Facility (TSDF) **Note:** Although the UHWM may serve as a BOL when hazardous materials are included in a hazardous waste shipment, it is not recommended. Use a separate BOL.
UNIVERSAL WASTES	Universal Wastes (hazardous wastes with special exemptions to encourage recycling) have unique transportation requirements. Universal waste should be handled and transported as a hazardous material. A BOL must be used when shipping universal wastes to a recycler. All DOT requirements are in effect. **Note**: Small quantities of fluorescent lamps may be shipped to another facility for recycling aggregation, without a BOL **Note:** There are special container markings for each type of universal waste

BellSouth Environmental/Safety Management **Hazardous Material/Waste Management**
Summary Fact Sheet # 17603 **Issue Date: January 1, 2000**

Page 1 of 3

TOPIC	**COMMUNITY RIGHT TO KNOW (EPCRA)**
DESCRIPTION	This Fact Sheet provides a general overview of the structure and reporting requirements of the Emergency Planning and Community Right to Know Act of 1996 (EPCRA or SARA Title 111)
SCOPE	EPCRA establishes requirements for Federal, State and local governments and industry regarding emergency planning and "Community Right-to-Know" reporting on hazardous and toxic chemicals. The Community Right-to-Know provisions will help increase the public's knowledge and access to information on the presence of hazardous chemicals in their communities and releases of these chemicals into the environment. States and communities, working with facilities, will be better able to improve chemical safety and protect public health and the environment. EPCRA provisions has four major sections: 1. emergency planning (Section 301-303), 2. emergency release notification (Section 304), 3. community Right-to-Know reporting requirements (Sections 311-312) and 4. toxic chemical release inventory (Section 313).
STATE EMERGENCY RESPONSE COMMISSION	EPCRA requires the Governor of each state designate a State Emergency Response Commission (SERC). Many SERCs include public agencies and departments concerned with issues relating to environment, natural resources, emergency services, public health, occupational safety, and transportation. In addition, interested public and private sector groups and associations with experience in emergency planning and Community Right-to-Know issues may be included in the State commission. The SERC must also have designated local emergency planning districts and appointed Local Emergency Planning Committees (LEPC) for each district. SERCs have designated over 4,000 local districts. Thirty-five State commissions chose counties as the basic district designation (often with separate districts for municipalities) and ten SERCs designated sub-state planning districts. The SERC is responsible for supervising and coordinating the activities of the LEPC, for establishing procedures for receiving and processing public requests for information collected under other sections of SARA Title III, and for reviewing local emergency plans. This LEPC must include at a minimum, elected state and local officials, police, fire, civil defense, public health professionals, environmental, hospital, and transportation officials as well as representatives of facilities subject to the emergency planning requirements, community groups, and the media. As soon as facilities are subject to the emergency planning requirements, they must designate a representative to participate in the planning process. The LEPC is required to complete a number of tasks, including establishing rules, giving public notice of its activities, and establishing procedures for handling public requests for information. However, the LEPC's primary responsibility is to develop an emergency response plan and review it at least annually thereafter. In developing this plan, the LEPC evaluates available resources for preparing for and responding to a potential chemical accident.

BellSouth Environmental/Safety Management **Hazardous Material/Waste Management**
Summary Fact Sheet # 17603 **Issue Date: January 1, 2000**
Page 2 of 3

LOCAL **EMERGENCY** ***PLANNING*** **COMMITTEES** (continued)	The plan must: * identify facilities and transportation routes of extremely hazardous substances; * describe emergency response procedures, on-site and off-site; * designate a community coordinator and facility coordinator(s) to implement the plan; * outline emergency notification procedures; * describe methods for determining the occurrence of a release and the probable affected area and population; * describe community and industry emergency equipment and facilities and identify the persons responsible for them; * outline evacuation plans; * describe a training program for emergency response personnel (including schedules); * present methods and schedules for exercising emergency response plans.
EMERGENCY RESPONSE ***PLANS***	The emergency response plan must be initially reviewed by the SERC and, at least, annually by the LEPC. Planning activities of LEPCs and facilities should be initially focused on, but not limited to, the 360 extremely hazardous substances published in the Federal Register. Plans should be comprehensive, addressing all hazardous materials of concern and transportation as well as fixed facilities. Any facility that has present any of the listed chemicals in a quantity equal to or greater than its threshold planning quantity is subject to the emergency planning requirements. Covered facilities must notify the SERC and LEPC that they are subject to these requirements within 60 days after they begin to have present any of the extremely hazardous substances in an amount equal to or in excess of threshold planning quantities.
EMERGENCY NOTIFICATION	Facilities must immediately notify the LEPCs and the SERCs likely to be affected if there is a release into the environment of a hazardous substance that exceeds the reportable quantity for that substance. Substances subject to this requirement are those on the list of 360 extremely hazardous substances as published in Federal Register (40 CFR 355) as well as the more than 700 hazardous substances subject to the emergency notification requirements under CERCLA Section 103(a)(40 CFR 302.4). Some chemicals are common to both lists. The CERCLA hazardous substances also require notification of releases to the National Response Center (NRC), which alerts federal responders.
COMMUNITY RIGHT-TO-KNOW **REQUIREMENTS**	Hazardous chemicals covered by section 312 are those for which facilities are required to prepare or have available an MSDS under OSHA's Hazard Communication Standard and that were present at the facility at any time during the previous calendar year above specified thresholds. The specific threshold quantities established by EPA for Section 312 for hazardous chemicals, below which no facility must report, are: * For extremely hazardous substances: 500 pounds or the Threshold Planning Quantity (TPQ), whichever is lower. * For all other hazardous chemicals: 10,000 pounds. If requested by an LEPC, SERC, or local fire department, the facility must provide the following Tier II information for each substance subject to the request:

BellSouth Environmental/Safety Management **Hazardous Material/Waste Management**
Summary Fact Sheet # 17603 **Issue Date: January 1, 2000**
Page 3 of 3

COMMUNITY **RIGHT-TO-KNOW REQUIREMENTS** (continued)	* The chemical name or the common name as indicated on the MSDS, * An estimate (in ranges) of the maximum amount of the chemical present at any time during the preceding calendar year (Some states require actual weight to be reported), * A brief description of the manner of storage of the chemical, * The location of the chemical at the facility, and, * An indication of whether the owner elects to withhold location information from disclosure to the public. EPA published a uniform format for the inventory forms on October 15, 1987. However, some states have incorporated the federal contents in their own forms. Tier II forms should be obtained from the SERC and must be submitted for covered facilities on or before March 1, annually. EPA believes that Tier II reports provide emergency planners and communities with more useful information than the Tier I form and encourages facilities to submit Tier II forms. The public may also request Tier II information from the SERC and the LEPC. !,
SARA TITLE III **PENALTIES**	Section 325 of the Emergency Planning and Community Right-to-Know Act addresses the penalties for failure to comply with the requirements of this law. Civil and administrative penalties ranging up to $10,000-$75,000 per violation or per day per violation can be assessed ~,I To facilities that fail to comply with the emergency planning (section 302), emergency notification (section 304), Community Right-to-Know (sections 311 and 312), toxic chemical release (section 313), and trade secret (sections 322 and 323) reporting requirements. Criminal penalties up to $50,000 or five years in prison may also be given to any person who knowingly and willfully fails to provide emergency release notification. Penalties of not more than $20,000 and/or up to one year in prison may be given to any person who knowingly and willfully discloses any information entitled to protection as a trade secret. In addition, section 326 allows citizens to initiate civil actions against EPA, state emergency response commissions, and/or the owner or operator of a facility or failure to meet the requirements of the emergency planning and Community Right-to-Know provisions. A state emergency response commission, local emergency planning committee, state or local government may institute actions against facility owner/operators for failure to comply with Title III requirements.
REPORTING **REQUIREMENTS**	The RD is responsible for gathering and reporting all necessary information to E/S. E/S will prepare, sign and submit the Tier II forms to the regulatory agencies, as required.

BellSouth Environmental/Safety Management **Hazardous Material/Waste Management**
Summary Fact Sheet # 17604 **Issue Date: January 1, 2000**

Page 1 of 2

TOPIC	**DOCUMENT RETENTION**			
DESCRIPTION	The purpose of this Fact Sheet is to identify the various environmental) l documents, retention periods and retention locations.			
SCOPE	One of the more important aspects of hazardous material and waste management is accurate Record-keeping and document retention. Regulations specifically state that it is the generator's responsibility to be able to prove generation rate and waste stream analysis. To enable BellSouth to comply with this requirement, the following documents are to be maintained at the generating facility. Records (Hazardous Material/Waste Management Binder) for hazardous activities conducted at remote or unmanned locations will be maintained at each location, or at the facility that has first level operational control of that site. A notice will be posted in those facilities indicating location of the documents and contact name/telephone number for gaining access to the documents. In locations where documentation is not required, a sign should be posted on the general/governmental bulletin board indicating the location of the Binder. Without well organized and detailed records to document what a generator has done to comply with the various EPA, OSHA, and DOT standards and regulations, a generator of hazardous or other types of wastes can not prove how they properly handled, stored, transported and disposed of their wastes. In general, all such records must be maintained for a minimum of five years.			
RELATED	**For More Information On:**	**See the Following:**		
DOCUMENTS	Environmental Terms and Definitions	Fact Sheet # 17103		
	Obtaining an EPA Identification Number	Fact Sheet # 17205		
	Hazardous Material Storage Area	Fact Sheet # 17401		
	Hazardous Waste Storage Area	Fact Sheet # 17402		
STRATEGY	Listed below is the current Hazardous Material/Waste Record-keeping Strategy			
	HAZARDOUS MATERIAL/WASTE RECORDKEEPING STRATEGY			
	Applicability	**Requirements**	**Retention Where Kept**	
	Hazardous Waste Generators	Copy of EPA Registration Form (not applicable for CESQG)	For current operations	Binder - Tab 2/ GLC File
		Hazardous waste generation logs Hazardous material and waste storage logs	5 years	Binder - Tab 1
		Hazardous waste identification documentation, e.g., MSDS(s), copies of lab analysis for all waste streams produced at that site	5 years	Binder - Tab 2/ HMD File
		Copy of each Biennial Report and Exception Report (Annual/Quarterly if applicable).	5 years	Binder - Tab 2/ GLC File

BellSouth Environmental/Safety Management **Hazardous Material/Waste Management**
Summary Fact Sheet # 17604 **Issue Date: January 1, 2000**

Page 2 of 2

(continued)	Hazardous Waste Generators (continued)	Documents verifying the transportation of wastes from generating facilities to the treatment, storage, recycling or disposal facility. These records include: Uniform Hazardous Waste Manifests, Hazardous Materials Bills of Lading - RF 1800 and Land Disposal Restriction (Land Ban) Form	5 years	Binder – Tab 2/ GLC File/ HMD File
		Records of the date and time of the inspection, the name of the inspector, a notation of the observations made and the date and nature of any repairs or other remedial actions.	5 years	Binder - Tab 1
		Copies of Contingency Plans and/or Emergency Preparedness and Prevention Plans (where I applicable)	Current, plus 5 years	EOP Binder/ Near EOP Binder
		Environmental Training Records	current, plus 5 years	TEDS
		Activity Reports to Environmental Management	none	N/A
		Copies of "Receipt of Unsolicited Hazardous Materials/Waste" reports.	S years	Binder - Tab 2/ HMD Files
	Community Right to Know Reports	Activity Reports to E/S	None	N/A
		Copies of Tier IIs	S years	GLC File
	Release Responders	Document spill/release clean-up • Incidental - On storage area log • Spill/Release Cleanup Report • Significant - Same as above, unless remediation is necessary. Then documentation will be detailed documents for assessment, and remediation.	Incidental - 5 Years; Remediation Project - indefinitely	Incidental - Binder - Tab 1/ GLC File/ Remediation File
	Users of hazardous materials	Copies of Material Safety Data Sheets (MSDSs) for each product used at the facility, including products brought on-site by contractors/vendors.	As long as the product is in use, plus 30 years. (File in archives or database)	MSDS Vendor (800/743-6737) Note: It is recommended that paper copies be maintained at large/active facilities.

BellSouth Environmental/Safety Management Hazardous Material/Waste Management
Summary Fact Sheet # 17605 Issue Date: January 1, 2000 Page 1 of 2

TOPIC	**HAZARDOUS MATERIAL/WASTE TRAINING**	
DESCRIPTION	This Fact Sheet identifies training requirements associated with the handling and management of hazardous materials and hazardous wastes. **Note:** This Fact Sheet references some, but not all, OSHA required training. Contact your Safety Manager for additional information.	
SCOPE	Every governmental body (OSHA, DOT and EPA) which regulates hazardous work environments, and hazardous materials and wastes has set very strict guidelines concerning the use and management of these types of materials. To meet these regulatory requirements, BellSouth has developed two separate, but intertwined education programs to ensure work place and environmental safety. The two programs are the Occupational Health and Safety program for "Hazard Communication - Employee Right to Know", and the Environmental Management Training Plan. This chapter will not discuss the OH&S training program in depth. Employees who handle regulated materials/wastes must be trained on the hazards associated with those materials and on the proper methods and procedures to use when handling, storing, transporting or disposing of such regulated materials/wastes. This training would include such items as: * Hazardous Materials * Hazardous Wastes * Universal Wastes * Waste Disposal Requirements * Recordkeeping Requirements * Emergency Operation Plans * Contingency Plans * DOT Hazardous Materials Training * Personal Protective Equipment * OSHA Spill Response (29 CFR 1910.120)	
RELATED	**For More Information On:**	**See the Following:**
DOCUMENTS	Regulatory Overview	Fact Sheet # 17100
	Environmental Terms and Definitions	Fact Sheet # 17103
	Related Safety Issues	BSAPP
GENERAL **REQUIREMENTS**	BellSouth has established a four-level training program to support the Hazardous Material/Waste Management and compliance program. These levels are as described below:	
	Level 4	General Awareness - BellSouth Employees will be trained to the level where they demonstrate a general understanding of environmental issues and how they relate to their job.
	Level 3	Awareness Training - BellSouth Employees will be trained to the level where they demonstrate a general awareness of HM/W issues and how they relate to the individual employees responsibilities.

BellSouth Environmental/Safety Management **Hazardous Material/Waste Management**
Summary Fact Sheet # 17605 **Issue Date: January 1, 2000**

Page 2 of 2

***GENERAL* REQUIREMENTS** (continued)	***Level 2***	Method and Procedure - This is technical training for BellSouth employees with specific HM/W job responsibilities. They will be able to demonstrate a working proficiency of these M&Ps. Level 2 training involves attendance in training sessions, and review of management practices.	
	Level 1	Subject Matter Expert Training - This is specific technical training. Those completing this training will act as SMEs and serve as BellSouth internal consultants.	
DOCUMENTATION **ENVIRONMENTAL TRAINING VIDEOS**	Documentation of all environmental training shall be kept in each participating employee's personal training record, as well as in TEDS. Each supervisor with employees requiring environmental and/or safety training will keep copies of attendance sheets, to document and verify employee training. The following are examples of environmental videos available for Hazardous Material/Waste training. See "TEDS" or your training coordinator for additional training courses/videos.		
	TEDS #	**Video Name**	**Target Audience**
	EM750	Overview of Hazardous Materials/Waste	Those that use hazardous materials or generate waste from hazardous materials
	EM790	Managing Hazardous Materials/Wastes Storage Areas	Those that manage storage areas of hazardous materials or wastes
	EM751	Identifying Hazardous Wastes	Those that identify hazardous wastes at a facility
	EM752	Managing Hazardous Wastes On-Site	Those that manage hazardous wastes at facilities; those that maintain documentation at these storage Areas
	EM761	Spills and Releases	Anyone who plans to clean-up a spill or release, and Building Emergency Managers
SAFETY TRAINING VIDEOS	The following Safety videos are available for Hazardous Materials training:		
	TEAS #	**Video Name**	***Target Audience***
	SF305	Hazardous Communication - General Awareness	All employees
	SF305N	Hazardous Materials for Non-Transporters (Instructor led)	Persons who label, package, placard, or otherwise offer hazardous materials or wastes for transportation
	SF305T	Hazardous Materials for Transporters (Instructor led)	Those that transport Hazardous Materials on vehicles

BellSouth Environmental/Safety Management **Hazardous Material/Waste Management**
Summary Fact Sheet # 17701 **Issue Date: January 1, 2000**

HAZARDOUS MATERIAL STORAGE & TRACKING LOG

Facility Name: - **Generator Classification:** **GLC:**

Storage/Tracking

(1) Description of Material	(2) Quantity of Material	(3) Date Placed Into Storage	(4) Date of Disposal Request	(5) Date Material Shipped	(6) Disposal Facility or BSC

Storage Area Deficiencies

(1) Inspection Date	(2) Inspectors Initials	(3) Describe Deficiency	(4) Describe Corrective Action	(5) Date Corrected

Special Instruction for **"Unknown Material"** (awaiting analytical results) if determined to be a "Hazardous Waste":
- Enter date material is moved into the "Hazardous Waste Storage Area" as "Date Shipped." (Enter same date on the Hazardous Waste Storage & Tracking Log as "Date Placed Into Storage")
- Enter "Waste Storage Area" for Disposal Facility.

BellSouth Environmental/Safety Management **Hazardous Material/Waste Management**
Summary Fact Sheet # 17701 **Issue Date: January 1, 2000**

HAZARDOUS MATERIAL STORAGE & TRACKING LOG

Tracking/Storage					
(1) Description of Waste	(2) Quantity of Waste	(3) Date Placed Into Storage	(4) Date of Disposal Request	(5) Date Waste Shipped	(6) Disposal Facility or BSC

Storage Area Deficiencies				
(1) Inspection Date	(2) Inspectors Initials	(3) Describe Deficiency	(4) Describe Corrective Action	(5) Date Correct

BellSouth Environmental/Safety Management **Hazardous Material/Waste Management**
Summary Fact Sheet # 17703 **Issue Date: January 1, 2000**

Page 1 of 1

PRE-TRANSPORTATION CHECKLIST FOR HAZARDOUS MATERIAL/WASTE		
Prior to shipping hazardous material/waste off-site, verify that each item below has been completed.		
ITEM	Yes	No
CONTAINER PREPARATION		
All containers are DOT approved		
Containers are rated for appropriate packing groups		
All bungs are secure and tightened		
All bungs are made of the same material as the drum (plastic bungs for plastic drums and metal bungs for metal drums)		
All gaskets are present		
For open-head drums, the ring and bolt is present, the bolt is the proper size, and the bolt is positioned below the top		
Drums are not corroded, rusting, bulging, or deteriorating		
Drums are clean and free of leaks		
Hazardous waste containers are labeled with proper Hazardous Waste Labels		
Hazardous wastes are labeled with diamond-shaped DOT labels		
All containers are marked with the proper shipping name and identification number (UN/NA).		
All containers marked with "This End Up"		
PAPERWORK VERIFICATION (hazardous waste only)		
EPA ID number, Manifest Document Number, and Generating Location address and phone numbers are correct on the manifest		
Hazard classes on manifest match DOT hazard class labels (diamond labels)		
EPA waste numbers on labels are correct		
Proper DOT shipping names, hazard classes, ID numbers, and packing groups are correct on hazardous waste labels		
EPA ID number, Manifest Document Number, and Generating Location address and phone numbers are correct on all the hazardous waste labels		
Proper DOT shipping names, hazard classes, ID numbers, and packing groups are correct on the manifest (item 11 a through d)		
EPA waste numbers on manifest are correct		
24 hour emergency response telephone number is listed on the manifest		
Emergency response information is referenced from manifest or attached to manifest		
EPA ID number, Manifest Document Number, and Generating Location address and phone numbers are correct on the manifest		
Location and EPA ID number are correct on Land Disposal Restriction Notification		
EPA hazardous waste numbers) are correct on Land Disposal Notification		
PLACARDING		
Total amount of hazardous materials being shipped has been determined		
Specific hazard class placards have been offered for quantities of materials over 5,000 pounds		
Driver has affixed placards to all four sides of the vehicle		
Placards are identical on all four sides of the vehicle		

BellSouth Environmental/Safety Management **Hazardous Material/Waste Management**
Summary Fact Sheet # 17704 **Issue Date: January 1, 2000**

Page 1 of 1

HAZARDOUS WASTE LARGE QUANTITIES GENERATION REPORT

Report Date: Activity Start Date:

Generation Activity:

Product Expiration___ Process Change ___ Spill Response _____

Explain:

Employee's Name:

Title: Phone:

Responsible Department:

Facility Name: GLC:

Facility Address:

Hazardous Waste Generation Rate (pounds)

Chemical or Product Name	Quantity Generated Per Event	Quantity Generated Per Month

Signature:

BellSouth Environmental/Safety Management **Hazardous Material/Waste Management**
Summary Fact Sheet # 17705 **Issue Date: January 1, 2000**
Page 1 of 1

NOTICE OF CENTRAL OFFICE EQUIPMENT TEAR-OUT

GLC:_____ Facility Address:____

Removal Start Date: Scheduled Complete Date:

Hazardous Material/Waste to Be Removed:

Batteries: N___ Y ____ Quantity/Type:

Mercury Relays/Switches: N___ Y____ Quantity/Type:

Asbestos: ___Y ___Y Type of Materials:

Other (PCBs, Radon Tubes, etc.) list:

Name:_____ Date:_____ Contact #:___
Capacity Manager

Name:_____ Date:_____ Contact #:____
C.O. Supervisor

EXHIBIT G

ASBESTOUS MANAGEMENT

APPENDIX A
Building Asbestos Management Activities Job Aids

AWA – 001 – "Baseline Surveys"

AWA – 002 - "Updated Baseline Surveys"

AWA – 003 – "Pre-Projects Surveys

AWA – 004 – "Presumed Asbestos Surveys"

AWA – 005 – "Damaged Asbestos Surveys"

AWA – 006– "Repairing and Abating Asbestos"

AWA – 007– "Flooring Maintenance Activities"

AWA – 008– "Clearing Levels"

AWA – 009– "Asbestos Release Response"

AWA – 010– "Asbestos Clean Up"

AWA – 011– "General Maintenance Work"

AWA – 012 – "Pre-Project Asbestos Consideration"

Appendix A - Building Asbestos Management Job Aids

Job Aid #AWA- 001 **2/24/98**

Work Activity	Baseline Surveys		
When Used	When a facility is being leased or purchased by BellSouth When no baseline survey exists		
Performed By	State Asbestos Consultant as requested by the Real Estate Negotiator		
Procedure	The following process contains the steps taken by the State Consultant for a Building Survey. This information will be used to decide whether to purchase or lease the facility.		
	Step	**Action**	
	1	Inspect all areas of the building and prepare a list of a materials that could contain ACM.	
	2	Separate each type of material into "homogeneous areas" as defined under AHERA.	
	3	Collect samples according to AHERA protocol as follows: ▪ Homogeneous areas < 1000square feet = 3 sample ▪ Homogeneous areas 1000 - 5000square feet = 5 samples ▪ Homogeneous areas > 5000square feet = 7 samples **Note: Samples should be taken according to Work Class III as prescribed under OSHA 29CFR 1926.1101**	
	4	**Analyze samples** according to Polarized Light Microscopy Note: Laboratory must participate in EPA Interim Asbestos Bulk Sample quality Control Program, be NIST and NVLAP certified	
	5	**Designate homogeneous areas as "asbestos containing**" if at least one sample from an homogeneous area contains greater than one percent of asbestos	
	6	***Assess the condition of the asbestos***	
	7	***Develop future costs to abate***	
	8	If BST decides to purchase or lease the building, **develop** a baseline survey report following the format adopted by P&SM	
	9	**Label** each homogeneous area to explain type of material and color code to indicate the presence of ACM **Note: Red will be used to indicate ACM is present; green for the absence of ACM** (Appendix G- Exhibit 3)	
	10	**Place** "Danger-Asbestos" signs as appropriate. (Appendix -Exhibit	
	11	Place "Notice - Asbestos" sign as appropriate Appendix - Exhibit 1	
Documentation	What	By Whom	To Whom
	Baseline Survey Report	State Asbestos Consultant	Real Estate Negotiator Lead AE
Communication	None		
Training	Certification in "Inspecting Asbestos" an "Managing Asbestos" (see Appendix 1)		
Other Resources Available	None identified		

Page A-2

BellSouth Telecommunications **Chapter 3 - Asbestos Management**
GU-BTEN-001BT **Issue C, March, 1998**
Appendix A - Building Asbestos Management Job Aids
Job Aid#AWA-002 **2/24/98**

Work Activity	***Updated Baseline Surveys***		
When Used	When P&SM Management decides that updating an existing survey is in the best interest of the Management Program for that facility.		
Performed By	State Asbestos Consultant as requested by the Lead AE		
Procedure	The following process contains the steps taken by the State Consultant for a Building Sur vey. The purpose of these procedures is to update the survey to meet the AHERA protocol		
	Step	**Action**	
	1	**Inspect** all areas of the building and prepare a list of all materials that could contain ACM.	
	2	**Separate** each type of material into "homogeneous areas" as defined under AHERA.	
	3	**Evaluate original survey** to determine location of previous samples	
	4	**Collect any** additional samples according to AHERA protocol as follows: • Homogeneous areas < 1000square feet = 3 samples • Homogeneous areas 1000 - 5000square feet = 5 samples • Homogeneous areas > 5000square feet = 7 samples Note: Samples should be taken according to Work Class III as prescribed under OSHA 29CFR 1926.1101	
	5	**Analyze samples** according to Polarized Light Microscopy Note: Laboratory must participate in EPA Interim Asbestos Bulk Sample Quality Control Program, be NIST and NVLAP certified	
	6	**Designate homogeneous areas as asbestos containing** if at least one sample from an homogeneous area contains greater than one percent of asbestos	
	7	**Designate homogeneous areas as "Non-asbestos**" only when a sufficient number of samples has been determined to contain less than or equal to 1% - asbestos	
	8	**Assess** the Condition of the asbestos	
	9	**Develop** a survey report following the format adopted by P&SM	
	10	**Label** each homogeneous area to explain type of material and color code to indicate the presence of ACM Note: Red will be used to indicate ACM is present; green for the absence of ACM (Appendix G- Exhibit 3)	
	11	**Place** "Danger-Asbestos" signs as appropriate. Appendix G-Exhibit 2	
	12	**Place** ""Notice -Asbestos" sign as appropriate Appendix - Exhibit 1	
	13	**Update** "Building Inventory" If a building requires a MP, prepare document And place at building.	
Documentation	What	By Whom	To Whom
	Updated Baseline Survey Report	State Consultant	Lead AE
Communication	Within 24 hours, after previously unidentified asbestos is discovered, the ACP-001 "Notification of Asbestos Presence" protocol should be initiated.		
Training	certification m "Inspecting Asbestos" and "Managing Asbestos" (see Appendix I)		
Other Resources *Available*	Existing Baseline Survey		

Page A-3

Appendix A - Building Asbestos Management Job Aids

Job Aid #AWA- 003 **2/24/98**

Work Activity	Pre -Project Surveys		
When Used	A pre-project survey should be conducted any time the asbestos status of a material to be impacted is not certain		
Affected RDs	Property and Services Management, Network Central Office, Network Power Management		
Performed By	State Asbestos Consultant		
Procedure	The following process contains the steps taken by the State Asbestos Consultant for a Pre-Project Building Survey. The purpose of these procedures is to identify ACM that may be affected by a proposed project, so that proper abatement can occur.		
	Step	**Action**	
	1	**Inspec**t areas of the proposed project; prepare a list of materials that could contain ACM	
	2	**Separat**e each type of material into "homogeneous areas" as defined under AHERA.	
	3	**Evaluate original survey** to determine location of previous samples in the project area	
	4	**Collect any additional samples** according to AHERA protocol as follows: • Homogeneous areas < 1000square feet = 3 samples • Homogeneous areas 1000 - 5000square feet = 5 samples • Homogeneous areas > 5000square feet = 7 samples Note: Samples should be taken according to Work Class III as prescribed under OSI-IA 29CFR 1926.1101	
	5	**Analyze samples** according to Polarized Light Microscopy Note: Laboratory must participate in EPA Interim Asbestos Bulk Sample Quality Control Program, be NIST and NVLAP certified.	
	6	**Designate homogeneous areas as asbestos containing** if at least one sample from an homogeneous area contains greater than one percent of asbestos	
	7	**Designate homogeneous areas as "Non-asbestos"** only when a sufficient number of samples has been determined to contain less than or equal to 1% asbestos	
	8	**Assess** the Condition of the asbestos	
	9	**Develop** a survey report following the format adopted by P&SM	
	10	**Label** each homogeneous area to explain type of material and color code to indicate the presence of ACM Note: Red will be used to indicate ACM is present; green for the absence of ACM (Appendix G- Exhibit 3)	
	11	**Place** "Danger-Asbestos" signs as appropriate. (Appendix G- Exhibit 2)	
	12	**Update** building inventory file	
	13	**Prepare** work permit for proposed construction/maintenance project	
Documentation	What	By Whom	To Whom
	Work Permit (Exb. 6- Appendix G)	BST Facility/Project/Program Manager Lead AE	Lead AE Project File
	Update Bldg. Inventory	State Asbestos Consultant	State Asbestos Consultant /Lead AE
Communication	ACP-002 ; ACP-003 if Asbestos Abatement Occurs		
Training	Certification in "Inspecting Asbestos" and "Managing Asbestos" (see Appendix I)		
Resources	Existing Building Surveys		

Page A-4

Appendix A - Building Asbestos Management Job Aids

Job Aid #AWA- 004 **2/24/98**

Work Activity	***Presumed Asbestos Surveys***		
When Used	In the event that an AHERA survey has not been completed and a decision has been made to presume the materials to be asbestos. The presumption of ACMs applies to all buildings built or material installed prior to 1981.		
Affected RDs	Property an Services Management		
Performed By	State Asbestos Consultant		
Procedure	The following process contains the steps to be followed for a Presumed Asbestos Building Survey		
	Step	***Action***	
	1	**Inspect** all areas of the proposed project and prepare a list of all materials that could contain ACM.	
	2	**Separate** each type of material into "homogeneous areas" as defined under AH-ERA.	
	3	**Presume** all Thermal System Insulation (TSI), surfacing material, and resilient flooring to be asbestos	
	4	**Designate** these homogeneous areas of building material as asbestos containing	
	5	**Determine** the quantity of presumed ACM	
	7	**Assess** the Condition of the presumed asbestos	
	8	**Develop** a survey report following the format adopted by P&SM	
	9	**Place Labels**, "Danger-Asbestos" signs and "Notice - Asbestos" signs as appropriate. See ACP-001 for guidance.	
Documentation	**What**	**By Whom**	**To Whom**
	Updated Building Inventory	Asbestos Project Manager	Lead AE
Communication	ACP-002		
Training	Certification m "Inspecting Asbestos" and "Managing Asbestos" see Appendix I		
Other Resources	Existing Building Surveys		

Page A-5

Appendix A - Building Asbestos Management Job Aids

Job Aid #AWA- 005 **2/24/98**

Work Activity	Damaged Asbestos Surveys		
When Used	Following a call to the BSC to report damaged asbestos, during a Environmental compliance review.		
Affected RDs	Property and Services Management		
Performed By	Facility Manager, State Asbestos Consultant, Environmental/Safety area manager.		
Procedure	The following process contains the steps taken to determine if damaged material contains Asbestos		
	Step	**Action**	
	1	**Inspect** all areas o the reported damage asbestos	
	2	**Refer** to the building survey, if available, for asbestos location information. Alternately refer to building material labeling or confer with the Lead AE. If the survey Conforms to the AHERA protocol, utilize that survey information to determine if the material is asbestos and GO TO Step 9. Otherwise continue through steps 3-8.	
	3	**Separate** each type of material into "homogeneous areas" as defined under AHERA.	
	4	**Evaluate original survey** to determine location o previous samples	
	5	**Collect any additional samples** according to AHERA protocol as follows: • Homogeneous areas < 1000square feet = 3 samples • Homogeneous areas 1000 - 5000square feet = 5 samples • Homogeneous areas > 5000square feet = 7 samples Note: Samples should be taken according to Work Class III as prescribed under OSHA 29CFR 1926.1101	
	6	**Analyze samples** according to Polarized Light Microscopy Note: Laboratory must participate in EPA Interim Asbestos Bulk Sample Quality Control Program, be NIST and NVLAP certified	
	7	**Designate homogeneous areas as asbestos containing** if at least one sample from an homogeneous area contains greater than one percent of asbestos	
	8	**Designate homogeneous areas as "Non-asbestos"** only when a sufficient number of samples has been determined to contain less than or equal to 1% asbestos	
	9	**Assess the Condition, Location, and Type of asbestos**	
	10	**Utilize** "Asbestos Assessment and Decision Table" to determine the action required for the BSC request.	
	11	**Perform** action required.	
	12	**Close** B ticket.	
	1	**Update "Building** Inventory" following abatement o AC	
Documentation	**What**	**By Whom**	To **Whom**
	Updated Survey Report	Facility Manager or State Asbestos Consultant	Lead AE
Communication	Communication Protocol #A P-003, if asbestos abatement occurs		
Training	Certification in "Inspecting Asbestos" and "Managing Asbestos" see Appendix I		
Other Resources	Existing Building Surveys		

Page A-6

Appendix A - Building Asbestos Management Job Aids

Job Aid #AWA – 006 2/24/98

Work Activity	Repairing and Abating Asbestos		
When Used	For removing, encapsulating, or enclosing ACM prior to renovation, demolition, maintenance or construction activities. Also used to correct damaged asbestos.		
Performed By	FM/PM/Lead AE State -Asbestos Consultant Asbestos Abatement Contractor Note: for Floor Tile Removal (OSHA Class 11 activity), the use of contractors that are not on the BSALLIP list, but are trained/licensed according to asbestos regulations is allowed. However, any modification to OSHA Work Class II procedures must be approved by BST		
Procedure	The following process should be used after it is known (through sampling or review of existing Information) that asbestos will be affected by a project:		
	Step	**Action**	
	1	FM/PM/Lead commission a qualified asbestos consultant (consultant must be Qualified as an EPA Project Designer). For consulting fees > $ 50,000, contact P&SM-Procurement	
	2	State Consultant decides approach according to the following criteria: If Amount is over 260 LINEAR FEET, 160 SF, or 35cubic feet use a Consultant to Design, go to **Step 5**. If Amount is less, use a consultant to design and direct the abatement project, Go to **Step 4**	
	3	**State Consultant develops, designs and bids or negotiates Abatement Documents** (include a copy of the *BSALLIP Air Monitoring and Pressure Differential Standard)*	
	4	**State Consultant contacts P&SM-Lead** AE to obtain an appropriate contractor (BSALLIP and EPA approved)	
	5	**State Consultant completes** a BSAL IP Project Application	
	6 7	Contractor/Consultant develops Method of Procedure MOP **Abatement Contractor performs** Abatement Project	
	8	**State Consultant updates** Building Inventory and signage	
Documentation	**What**	**By Whom**	***To Whom***
	BellSouth Post - Completion Report	State Asbestos Consultant	BSALLIP and Project Manager State Asbestos Consultant Lead AE
	10-day Notification	Consultant or Contractor Area Safety Manager	Hazardous Material/Waste Management Binder
	Asbestos Abatement Project Report	State Asbestos Consultant Contractor – for small projects	BSALLIP – within 30 days of Completion Project Manager State Asbestos Consultant Lead AE
Communication	**Notify Safety 10 days prior to project start to inform building occupants of Project** – Utilize Communication Protocol # ACP-003 to provide information to occupants of the Building **Notify Environmental Management of project** - Utilize a copy of 10 - day regulatory notice		
Training	Certification in "Supervision of Asbestos Projects" Licensing and Certification from State and Local Agencies BSALLIP approved		

Appendix A - Building Asbestos Management Job Aids

Job Aid #AWA-007 **2/24/98**

Work Activity	Flooring Maintenance		
When Used	For floor maintenance activities where floor tile and resilient flooring contains asbestos. For materials installed prior to 1981, all floor tile and resilient flooring is presumed to contain asbestos unless proven otherwise		
Performed By	House Service Contractors; Asbestos Abatement Contractors, Other Contractors		
Prohibitions / Restrictions	The following activities are prohibited or restricted in floor maintenance:		
	Item	**Activity**	
	1	**Sanding** of asbestos-containing flooring material	
	2	**Stripping** of finishes must be conducted by using low abrasion pads at speeds lower than 300 rpm and wet methods	
	3	**Burnishing or dry buffing** may be performed only on asbestos-containing flooring which has sufficient finish so that the pad cannot contact the asbestos-containing material.	
Removal of Individual Tiles	The following applies to removal of individual floor tiles:		
	Step	**Action**	
	1	HEPA vacuum the floor	
	3	Wet surface of tile	
	2	Pry-up tiles individually	
	3	Place in impermeable trash bag	
	4	Call the BSC for disposal	
	5	Document • removal in asbestos building inventory • disposal in Hazardous Material/Waste Management Binder	
Large Scale Removal of Floor Tile	The following decision criteria is used to determine the action necessary for asbestos-containing floor treatments. This should be used as guidance only. • In vacant space with no traffic flow, do not abate floor tile • In vacant space with traffic flow and with sound floor tile, do not abate • In vacant space with traffic flow and excessively -deteriorated asbestos containing flooring (tile or mastic), abate • If equipment is to be placed over damaged ACM, a site specific evaluation should be made to Determine if abatement of the portion of the area where the new equipment will go can be accomplished without creating an unacceptable hazard to existing equipment or incurring unacceptable expense Note: for Floor Tile Removal (OSHA Class II activity), the use of contractors that are not on the BSALLIP list, but are trained/licensed according to asbestos regulations is allowed. However, any modification to OSHA Work Class II procedures must be approved by BST		
Documentation	**What**	**By Whom**	**To Whom**
	BellSouth Post-Completion Report	State Asbestos Consultant	BALLIP and Project Manager State Asbestos Consultant/Lead AE
	10-day Notification	Consultant or Contractor	On-site Hazardous Material/ Waste Management Binder
	Asbestos Abatement Project Report	State Asbestos Consultant Contractor - for small projects	BALLIP - 30 days of completion Project Manager State Asbestos Consultant/Lead AE
Communication	**Notification of Asbestos Project- ACP-002**		

Work Activity	Clearance Levels		
When Used	Following Asbestos Projects (an "asbestos project" refers to the removal, enclosure, encapsulation, repair of asbestos or other activities that may disturb asbestos)		
Performed By	Accredited Asbestos Consultants / Accredited Laboratory		
Clearance Level	Required - Phase Contrast Microscopy (**PCM)** Clearance Level: 0.010 f/cc Optional - Transmission Electron Microscopy (**TEM)** Clearance Level: 70 s/mm2		
Abatement Area Sampling	**Description**	• Abatement areas that meets the following criteria: more than 1 day duration, and • Requires OSHA Class I and II work activities	
	Procedures	• Conduct final clearance sampling only after the secondary (inside) containment barriers have been removed; the abatement area has been thoroughly dried; and, it has passed visual inspection tests by qualified personnel • After the area has passed a thorough visual inspection, use aggressive Sampling conditions to dislodge any remaining dust (perform only within enclosure) • For **PCM analysis** (NIOSH Method 7400) • collect 5 samples within the abatement area • response action is complete if the concentration of fibers for each of the five • samples is less than or equal to 0.01 fibers/cm3 • If the abatement site does not satisfy this, the site must be recleaned and a new sample collected. • For **TEM Analysis** • collect a minimum of 13 samples; five inside the abatement area, five outside the abatement area, two field blanks, and one sealed blank. Response action is complete if either: (1) the arithmetic mean is less than or equal to 70 s/mm2 and the average concentration inside the abatement area is not statistically higher than the average concentration Measured outside If the abatement site does not satisfy either (1) or (2) above, the site must be re-cleaned and a new set of samples collected.	
Small Scale Asbestos Projects and Asbestos Release Response	**Descriptions**	Abatement /response areas that meet one of the following criteria: Less than 1 day duration Use glove-bag removal practices involve clean-up of asbestos releases	
	Procedure	• Conduct final clearance sampling only after the abatement area has been thoroughly dried; and, it has passed visual inspection tests by qualified Personnel. • **Do not utilize aggressive sampling techniques unless test area is within an enclosure** • For **PCM Analysis**, • Collect three sample in the area of abatement • Response action is complete if the concentration of fibers for each of the three samples is less than or equal to 0.01 fibers/cm3 • If the abatement site does not satisfy this, the site must be re-cleaned and a new sample collected.	
Documentation	**What**	**By Whom**	**To Whom**
	Include Air Monitoring Results in Asbestos Abatement Project Report	State Asbestos Consultant Contractor - for small projects	BSALLIP - 30 days of completion Project Manager State Asbestos Consultant Lead AE
Communication	Communication Protocol A P- "Notification o Asbestos Project -Final Results Communication Protocol ACP-004 "Notification) of Asbestos Release" -Final Results		

Job Aid #-009

Work Activity	Asbestos Release Response		
When Used	Following unplanned Release of Asbestos from building materials into BST Buildings and into the environment.		
Performed By	Initial Responder (any BST employee, vendor, etc.') BST Facility Managers BST Facility Related -Asbestos Abatement Contractor Asbestos Consultant		
Procedure	The	following process should be used in response to asbestos emergency release:	
	Step	**Action**	
	1	Initial Responder calls the BSC to report release of asbestos 780-2740 for NC, SC, FL, GA 557-6194 LA, MS, TN, AL, KY	
	2	BSC refers Work Order to Facility Manager	
	3	Facility Manager arrives at site and ensures the following procedures are followed: 1) **Restrict air flow** to area by shutting-off or temporarily modifying ventilation to area to prevent the distribution of fibers to other areas of the building 2) **Restrict** access and post signs 3) **Saturate** the debris using wet methods if possible 4) **Provide** information to Area Safety Manager so they can Inform building occupants of release 5) **Contact** State Asbestos Consultant/Lead AE for Clean-up	
	4	**Asbestos Abatement Contractor cleans** the area using job Aid AWA-010 "Clean-up of ACM" and Job Aid AWA-008 "Asbestos Clearance Levels" Note: No cleanup of ACM should be attempted by a BellSouth employee.	
	5	**Dispose** according to AWA-020 Work Practice "Disposition of ACM"	
	6	**Maintain documentation** in Hazardous Material / Waste Management Binder	
Documentation	**What**	**By Whom**	**To Whom**
	Spill/Release Clean-up Report (from GU-BTEN-001BT – Chapter 4. – Hazardous Materials/ Waste Management M&P	State Asbestos Consultant or Asbestos Abatement Contractor	Place report in appropriate "Hazardous Material/Waste Management" file copy to Lead AE
Communication	Communication Protocol ACP –004 “Notification of Asbestos Release”		
Training	Awareness Training – see Appendix I		
Additional Information	Section 4.7 "Responding to Hazardous Material/Waste Spills/Release", Chapter 4, GU-BTEN-001BT		

Work Activity	Clean -up of Asbestos		
When Used	Following an asbestos release		
Performed By	Asbestos Consultant Asbestos Abatement Contractor		
Procedure	The following process should be used to clean-up asbestos:		
	Step	**Action**	
	1	**Facility Manager** arrives at site and follows procedures in Job Aid AWA-009 " Asbestos Release Response"	
	2	**Facility Manager** contacts Asbestos Consultant, if appropriate	
	3	**State Asbestos Consultant** assesses area of release and recommends action required. Should the condition of the release require OSHA Work Practices, an Asbestos Abatement Contractor will be dispatched to the facility. The State Asbestos Consultant should notify the Lead AE of the release and clean-up.	
	4	**An Asbestos Abatement Contractor** cleans area of release according to the direction of the Asbestos Consultant	
	5	Following Clean-up, **air samples are collected** according to OSHA requirements to establish if area has been adequately clean (see AWA-008 "Asbestos Clearance Levels)	
	6	**Building Occupants** are notified of results of air monitoring	
	7	**Release area** is reopened for building occupancy	
Documentation	**What** Spill/Release Clean-up Report (from GU-BTEN-001BT – Chapter 4 - Hazardous Materials/ Waste Management Method & Procedure	**By Whom** State Asbestos Consultant or Asbestos Abatement Contractor	**To Whom** place report in appropriate "Hazardous Material/Waste Management" file copy to Lead AE
Communication	Communication Protocol A - 004 "Notification of Asbestos Release"		
Training	Certification in "Supervision of Asbestos Projects" Licensing and Certification from State and Local Agencies BSALLIP approved		
Additional In-Formation	Section 4.7 "Responding to Hazardous Material/Waste Spills/Release", Chapter 4, GU-BTEN-001BT		

Work Activity	***General Maintenance Work***		
When Used	This procedure should be followed when conducting other activities that will "disturb" ACMs or when conducting activities that will "contact" asbestos but not disturb it NO'T'E: If a building has implemented a site specific Operations and Maintenance Plan, the information contained in that plan supersedes this Job Aid.		
Performed By	Maintenance or custodial vendors		
Requirements When Disturbing Asbestos (OSHA Class III activi-ties)	**Requirements**	**Description**	
	Communication (see ACP-005)	Post the following notification sign: **DANGER** **ASBESTOS** **CANCER AND LUNG DISEASE HAZARD** **AUTHORIZED PERSONNEL ONLY**	
	Training	• 16 hour Maintenance and Custodial training (or as determined by the "Competent Person") • Annual refresher required	
	Regulated Area	Clearly mark off the work area cones/tape and place a drop cloth where the activity will be performed	
	HEPA Vacuum **Other**	If a vacuum is required; only HE PA filter equipped vacuums may be used If activity generates asbestos fiber levels grater than the PEL 0.1 fibers / cc) additional requirements must be implemented: • Respirator use, protective clothing • barriers, decontamination area, **notifications**	
Requirements When Disturbing Asbestos (OSHA Class III activi-ties)	**Examples**	• repair of elbow on pipe • drilling holes in ACM wallboard, resilient flooring or transite • transite duct repair • removal of mastics • popping up ceiling tile if asbestos debris is present	• laying or pulling cable where ACM is present • removal of ACM ceiling tiles (< 6) • removal of small amounts of resilient flooring (< 120 sq. ft)
Requirements When Contacting but not disturbing Asbestos (OSHA Class IV activi-ties)	**Requirements**	**Description**	
	Communication	Not required unless activity is above PE (.1 fibers/cc)	
	Training	2 our Awareness or as determine by the "Competent Person"	
	Regulated Area	No demarcation required unless above the PEL	
	Other	If activity generates asbestos fiber levels grater tan the EL 0.1 fiber; cc) additional requirements must be implemented: • respirator use , protective clothing • barriers, decontamination area	
	Example	Floor tile maintenance (waxing/buffing)	
Requirements for Custodial Activities	**Requirements**	**Description**	
	Communication	Not require unless activity is above PEL (.1 fibers/cc)	
	Training **Regulated Area** **Other**	2 Hour Awareness or as determined by the "Competent Person") No demarcation require unless above the PEL If activity generates asbestos fiber levels greater than the PEL (0.1 fibers cc) additional requirements must be implemented: • respirator use, protective clothing • barriers, decontamination area	
Action for Non-Compliance	***Should activities be observed that are not in compliance with the above requirements, activities should be stp[[ed and the contractor supervisor should be immediately notified. (Contact the Building Service Center for emergencies)***		

Job Aid #AWA-012

2/24/98

Work Activity	***Pre-Project Asbestos Consideration***		
When Used	This procedure should be followed prior to any maintenance, renovation, demolition, or installation that could impact asbestos containing building materials		
Performed By	Project Manager, Program Manager, Facility Manager or Lead AE		
Procedure	***For work conducted under the Lead AE program:*** Lead AE accesses building records, ascertains asbestos status of impacted materials**,** coordinates surveys or abatements, as needed, and executes the Work Permit authorizing the project to continue. This work is conducted as part of the overall project.		
	For work conducted outside of the Lead AE program:		
	Step	**Action**	
	1	Initiating **Manager** (Project, Program, or Facility Manages responsible for completing Work Permit.	
	2	**Manager** will evaluate the materials to a impacted y the propose project	
	3	If any building material potentially containing asbestos may be impacted, The **Manager** requests an evaluation of building records from the Lead AE to ascertain if sufficient information is available to determine the asbestos content Of the material.	
	4	**Lead AE** accesses building records and reports, asbestos status of the materials In question to the **Manager.**	
	5	If material is definitely negative, the **Manager** executes the Work Permit by completing Sections 1,2 and 3 and checking the block marked "No Asbestos Present" and signing to authorize.	
	6	If material is definitely positive, the **Manager** completes Sections 1,2 and 4 of the Work Permit, and ascertains the appropriate response - abatement or redesigning project to avoid the material.	
		If material is larger than 150 sq. ft, 20 linear feet, or 3 cu ft, the **Manage**r contacts the Lead AE for concurrence on scope.	
	7	When the response is complete, the **Manager** signs the Work Permit authorizing continuation of the project.	
	8	If the asbestos status of the material is uncertain, the **Manager** initiates a Pre-Project Asbestos Survey (see Job Aid AWA-003).	
	9	Once the asbestos status is determined, the **Manage**r continues with pre-project planning as noted above.	
Documentation	**What**	**By Whom**	**To Whom**
	Executed Work Permit	BellSouth Manager or Lead AE	Building Survey File Project File

Page A-13

Appendix D

Asbestos Communication Job Aids

ACP-001 "Notification of Asbestos Presence"

ACP-002 "Notification of Asbestos Prior to Projects"

ACP-003 "Notification for Asbestos Projects"

ACP-004 "Notification for Asbestos Release"

ACP-005 "Notification of Regulated Asbestos Area"

Communication Protocol	***Notification of Asbestos Presence***		
When Used	To notify • vendors whose employees will work in or next to areas with ACM/PACM • BST personnel who will work in or next to areas with ACM/PALM • all employers on multi--employer worksites whose employees will work in or next to such areas • tenants who will work in such areas Note: if previously unidentified asbestos is discovered, this notification must be made within 24 hours of discovery.		
Performed By			*Property and Services Managemen*
Procedure	The following is a list asbestos sumed	requirements that will be followed for all buildings that contain asbestos or pre-	
	Item	**Description**	
	1	Building Signage - "Notice -Asbestos"	Requirement: for Buildings without OMPs: • Required for all facilities where ACM or PACM may be present • Post at service entrance of facility or on official company bulletin board Reference: See Exhibit 1 to Appendix G
	2	OMP Building Signage - "Notice -Asbestos"	Requirement: for Buildings with OMPs: • Post at service entrance of facility or on official company bulletin board Reference: See Exhibit 9 in appendix G.
		Building Signage - "Danger-Asbestos"	**Requirement**: Posted in a place that is immediately visible inside the following rooms • Rooms or areas where exposed asbestos surfacing is present • Rooms where thermal system insulation containing asbestos or presumed asbestos is present **Format:** Signs must be clearly visible and must contain the following: DANGER **ASBESTOS** THIS AREA CONTAINS OR MAY CONTAIN ASBESTOS INCLUDE, BUT NOT LIMITED TO.THE FOLLOWING: BREATHING ASBESTOS DUST MAY CAUSE CANCER AND LUNG DISEASE DO NOT DISTURB ACM WITHOUT FOLLOWING PROPER PROCEDURES AND WORK PRACTICES AS SPECIFIED IN OSHA 29 CFR CONTACT THE BUILDING SERVICE CENTER TO REQUEST INFORMATION OR TO REPORT DAMAGED ASBESTOS **Reference:** See Exhibit 2 in Appendix G
	3	Material Labeling	**Requirements:** All ACM or PACM must be labeled, with the following exceptions: • Not required for ACM contained in rooms which have appropriate signs posted at entrances • Not required for encapsulated ACM • Not required where applying a label to the materials would cause a release of fibers • Not required where the material is inaccessible • Not required for flooring, baseboards, ceiling, etc., where labeling is impractical **Format:** Labels must be printed in large, bold letters on a red contrasting background and must contain the following information: *DANGER* **CONTAINS ASBESTOS FIBERS** **AVOID CREATING DUST** CANCER AND LUNG DISEASE HAZARD **Reference** : See Exhibit 3 in Appendix G

Job Aid #ACP -002 **2/24/98**

Communication *Protocol*	Notification of Asbestos Prior to Projects		
When Used	• To notify vendors whose employees will work in or next to areas with ACM/PACM • To ensure asbestos is considered prior to projects		
Performed By	**BellSouth as the Owner** **Vendors who perform work**		
Responsibilities	**The following is a list responsibilities for pre-project asbestos notifications**		
	BellSouth Responsibilities		
	• Assure areas containing asbestos are posted with proper Signage - see Job Aid ACP—001 • Evaluate asbestos prior to projects - see Job Aid AWA-004 • Notify vendor of asbestos presence – use • Signs/Labels as initial notice • Pre-Project Survey Report, Exhibit 7 when Pre-Project inspections are required (see AWA-003 for • guidance) • Assure vendor performs work according to requirements in contract		
	Vendor Responsibilities		
	• Perform no work until suspect material is evaluated for asbestos • Refer to asbestos signs and labels on building material for asbestos information • If unable to determine the asbestos locations, contact the BSC for a referral for additional asbestos Information • Utilize OSHA Work Practices for any activities that may disturb asbestos or contact asbestos.		
Documentation	**What**	**By Whom**	**To Whom**
	Pre-Project Survey Report	State Asbestos Consultant, Or Facility/Project Manager	State Asbestos Consultant Lead AE
	Work Permit (Appendix G, Exhibit 7)	FM/PM/Lea AE	Lea AE Project file
Communication Protocol	ACP-001 "Notification of Asbestos Presence"		
Additional Re- - Sources	Job Aid #AWA-003 "Pre-Project Surveys"		

Job Aid #ACP -003 **2/24/98**

Communication ***Protocol***	Notification for Asbestos Projects (an "asbestos project" refers to the removal, enclosure, encapsulation, repair of asbestos or other activities that may disturb asbestos)			
When Used	Prior to asbestos project and no more than 10 days after project completion			
Performed By	State Asbestos Contractor / Consultant Area Safety Manager			
Procedure	Step	Action		
	1	**State Asbestos Consultant/Contractor prepares internal** asbestos *'Asbestos Project Notification"* (Appendix G, Exhibit 5) and identifies appropriate building occupants. State Asbestos Consultant/Contractor prepares 10-day required NESHAP notification (if Applicable) and sends to regulatory body in that area.		
	2	**State Asbestos Consultant** sends copy of notifications to the Environmental/ Safety Manager in that area		
	3	**Area Safety Manager** notifies building occupants of project in letter form and conducts 'Right to Know' meeting		
	4	**Consultant/Contractor posts** *'Asbestos Project Notification"* in areas adjacent to project areas in plain site of affected building occupants		
	5	**Area Safety Manager** remains available to answer any questions concerning asbestos and the project during its duration		
	5	By 10 days after completion of project, **Post** final air monitoring results on *"Asbestos Project Notification" form*		
Documentation	**What**		**By Whom**	To **Whom**
	Information Letter		Area Safety Manager	Building Occupants
	Asbestos Project Notification Form, Appendix G - Exhibit 5		State Asbestos Consultant/ Contractor	Building Occupants - retain copy for project file
Other Resources Available	Job Aid AWA-003 "Pre-Project Surveys"			

Page D-4

BellSouth Telecommunications Management **Chapter 3 – Asbestos**
GU-BTEN-OOIBT **Issue C,**
March, 1998

Appendix D - Asbestos Communication Job Aids

Job Aid #ACP-004 **2/24/98**

Communication Pro-Tocol	***Notification for Asbestos Release***		
When Used	Following an asbestos release to inform building occupants		
Performed By	Area Safety Manager / State Asbestos Consultant		
Procedure	**Step**	**Action**	
	1	**State Asbestos Consultant/Contractor/Facility Manager stabilizes** area o release per Job Aid AWA-009.	
	2	**State Asbestos Consultant/Contractor prepare** asbestos *'Asbestos Project Notification"* Appendix G, Exhibit 4) and identifies appropriate building occupants.	
	3 **4**	**State Asbestos Consultant** -sends notification to Area Safety Manager **Area Safety Manager** notifies appropriate building occupants of release in letter form and/ or visits site in-person Note -"Appropriate buildings occupants" refers to those workers and vendors that work in areas adjacent to the asbestos release regulated area.	
	5	**Area Safety Manager posts** *'Asbestos Release Notification"* m areas adjacent to release m plain site of affected building occupants Note: Alternately, the Area Safety Manager can negotiate with the State Asbestos Consultant or other responsible party to post signs	
	6	**Area Safety Manager** remains available to answer any questions concerning asbestos and the project during its duration	
	7 By 10 days after clean -up of area of release , **State Asbestos Consultant posts** the final air monitoring results on *"Asbestos Release Notification "form and copies the Regional Safety Manager.*		
Documentation	**What**	**By Whom**	**To Whom**
	Information Letter	Area Safety Manager	Building Occupants
	Asbestos Release Notification , Appendix G – Exhibit 5	Area Safety Manager	Building Occupants – retain copy for project file
Other Resources Available	none identified		

Job Aid #ACP -005

Communication Pro- **Tocol**	Notification for Asbestos Regulated Area
When Used	Prior to setting up an asbestos regulated area for the purposes of performing activities that impact or may impact asbestos. To be used to notify other workers in the area that an asbestos "regulated area" has been set-up.
Performed By	BST vendors performing work in BST Buildings
Format **for Regulated Areas Where Respirators and Protective Cloth-ing are Required**	**DANGER** **ASBESTOS** **CANCER AND LUNG DISEASE HAZARD** **AUTHORIZED PERSONNEL ONLY** **RESPIRATORS AND PROTECTIVE CLOTHING** **ARE REQUIRED IN THIS AREA**
Format for Regulated **Areas Where Respira-tors or Protective Clothing is Not Re-quired**	**DANGER** **CANCER AND LUNG DISEASE HAZARD** **AUTHORIZED PERSONNEL ONLY**
Other Resources **Available**	Exhibit 10, Appendix G

Page 6

Appendix G Asbestos Forms

Exhibit 1- Notice - Asbestos
Exhibit 2 - Danger - Asbestos
Exhibit 3 - Asbestos Labels
Exhibit 4 - Asbestos Project Notification
Exhibit 5 - Asbestos Release Notification
Exhibit 6 - Pre-Project/ Work Activity Asbestos Report
Exhibit 7 - Damaged Asbestos Action Worksheet
Exhibit 8 - Asbestos Compliance Review Form
Exhibit 9 - Notice of Asbestos (OMP Building)
Exhibit 10 - Danger - Asbestos Regulated Area

NOTICE

BellSouth Telecommunications
GU-BTEN-OOIBT

Chapter 3 - Asbestos Management
Issue B, June, 1996
Appendix G -

Asbestos Forms

Exhibit 1 - Notice - Asbestos Sign

THIS BUILDING CONTAINS OR MAY CONTAIN ASBESTOS CONTAINING MATERIALS (ACM)

DO NOT DISTURB ACM WITHOUT FOLLOWING PROPER PROCEDURES

CONTACT THE BUILDING SERVICE CENTER TO REQUEST INFORMATION or TO REPORT DAMAGED ASBESTOS

780-2740 for North Carolina, South Carolina, Florida, Georgia
557-6194 for Louisiana, Mississippi, Tennessee, Alabama, Kentucky

Page G-2

DANGER

ASBESTOS

THIS AREA CONTAINS OR MAY CONTAIN ASBESTOS CONTAINING MATERIALS (ACM)

EXAMPLES INCLUDE, BUT NOT LIMITED TO, THE FOLLOWING:

- HVAC INSULATION
- PIPING
- DUCT/PLENUM
- TANKS
- BOILERS
- STANDBY ENGINE EXHAUST
- FLEXIBLE DUCT

BellSouth Telecommunications

BREATHING ASBESTOS DUST MAY CAUSE CANCER AND LUNG DISEASE

DO NOT DISTURB ACM WITHOUT FOLLOWING PROPER PROCEDURES AND WORK PRACTICES AS SPECIFIED IN OSHA 29 CFR 1926.1101

CONTACT THE BUILDING SERVICE CENTER TO REQUEST INFORMATION or TO REPORT DAMAGED ASBESTOS

780-2740 for North Carolina, South Carolina, Florida, Georgia
557194 for Louisiana Mississippi, Tennessee Alabama Kentucky

DANGER
CONTAINS ASBESTOS FIBERS
AVOID CREATING DUST
CANCER AND LUNG DISEASE HAZARD
Sample #_____

Asbestos containing material

NON-ASBESTOS CONTAINING
MATERIAL
Sample #_____

Non-asbestos containing material

Page G-4

Exhibit 4 – Asbestos Project Notification

NOTICE

Asbestos Project Notification to Building Occupants

Schedule:

Begin:

End:

Location of Work:

Description of Work:

Quantity of Asbestos:

Final Clearance Air Monitoring Results:
(to be provided no more than 10 days after project closure)

Contact for questions:

Page G-5

Exhibit 5 – Asbestos Release Notification

NOTICE

Exhibit 6 - Pre Project Asbestos Work Permit

Asbestos Release Notification to Building Occupants

Details of Release:

Location of Release:

Description of Corrective Action:

Final Clearance Air Monitoring Results:
(to be provided no more than 10 days after project closure)

Contact for questions:

Exhibit 7 – Damaged As bestos Action Worksheet

Damaged Asbestos Action Worksheet	
Facility: **Asbestos Description:** **Reference Work Order #/ENO#:** *Assign points according to the following asbestos criteria:*	
ACM Type	**T =**
Points	***Material Type***
1	Transite / Cementitious Material
2	Vinyl Asbestos Floor Tile
3	Caulk, Wallboard, Firestoppmg
4	Thermal System Insulation
5	Acoustical Surfacing / Fireproofing
Asbestos Condition	**C =**
Points	***Material Condition***
1	Slight damage - non-friable, low potential for disturbance
2	Slight Damage - friable, low potential for disturbance
3	Moderate damage - friable, low to moderate potential or disturbance
4	Moderate damage - friable, moderate to high potential or disturbance (in air stream)
5	Extreme Damage - friable, high potential for disturbance (in air stream)
Asbestos Location	**L =**
Points	*Material Location*
1	Locked / unused area; outside facility
2	Locked or unlocked with limited access - occasionally used (Boiler Room, Cable Vault, Crawl Space)
3	Mechanical Room (not a plenum)/moderate activity; Unoccupied open space-switch room, Basement
4	Moderate Occupancy Room (admin space 2-5 people)
5	High Occupancy (> 5 people); high traffic area (hallways, entrance, restrooms), if AHU Room is a plenum
Asbestos Quantity *(refers to quantity of damaged material only) -*	**Q =**
Points	*Material Quantity*
1	Minor amount (1-2 sq foot, 1 inches)
2	Small (2-4 sq ft,, 0.5-2 linear feet)
3	Moderate (4-50 sq ft, 2-50 linear feet)
4	Large (50 - 270 sq ft, 50-160 linear feet)
5	Significant (>270 sq ft, > 160 linear feet)
Multiply T x C x L x Q = _____(ACM Action Score)	

Page G-8

Exhibit 8 – Asbestos Compliance Review Form

Asbestos Management Compliance Review Code/Description						**M& P Chapter 3 Reference**	**Y, N, -, C, or #**
2020 MAINTAINING ACM							
1	**Asbestos is maintained in good condition so as to prevent release** (Use ***the following protocol to evaluate the condition of*** *the ACM and the appropriate action required. Only persons certified as "Asbestos Inspectors" may complete question l.)*						
	Type (T)	Points	Material Type				
		0	Non asbestos				
		1	Transite / Cementitious Material				
		2	Vinyl Asbestos Floor Tile				
		3	Caulk, Wallboard, firestopping				
		4	Thermal System Insulation				
		5	Acoustical Surfacing/ Fireproofing				
	Condition(C)	Points	Material Condition				
		1	Slight damage - non-friable, low potential for disturbance				
		2	Slight Damage - friable, low potential for disturbance				
		3	Moderate damage - friable, low to moderate potential for dis-Turbance				
		4	Moderate damage - friable, moderate to high potential for disturbance (:n air stream)				
		5	Extreme Damage - friable, high potential for disturbance (in air stream)				
	Location (L)	Points	Material Location				
		1	Locked / unused area; outside facility				
		2	Locked or unlocked with limited access - occasionally used (Boiler Room, Cable Vault, Crawl Space)				
		3	Mechanical Room (not a plenum)/moderate activity; Unoccu-pied open space-switch room, basement				
		4	Moderate Occupancy Room (admin space 2-5 people)				
		5	High Occupancy (> 5 people); high traffic area (hallways, entrance, restrooms), if AHU Room is a plenum				
	Quantity (Q)	Points	Material Quantity (refers to quantity of damaged materi-al only)				
		1	Minor amount (1-2 sq foot, l-6 inches)				
		2	Small (2-4 sq ft,, 0.5-2 linear feet)				
		3	Moderate (4-50 sq ft, 2-50 linear feet)				
		4	Large (- 7 sq t, 5 1 0 linear feet)				
		5	Significant (>270 sq ft, > 160 linear feet)				
	Inspection Worksheet						
	Description	**T**	**C**	**L**	**Q**	**Score**	

Exhibit 8 – Asbestos Compliance Review Form

Exhibit 8 - Asbestos Compliance Review Form			
2.	*Asbestos Presence has been adequately communicated to occupants in* **building:** • **Signs** - "Notice - Asbestos" at service entrances: • For buildings without OMPs - call BSC • for buildings with OMPs - call number on sign • **Signs** - "Danger Asbestos Signs" in Mechanical Rooms **Labels - labeling of ACM only when signs are not adequate** itional signage and labeling may be present but is not i- *included as a part of this review*	*Appendix D* *Job Aid*	
3.	**Use of OMP - Operation Maintenance Plan. If maintained**: • The plan must be implemented as indicated. If a plan is located in the facility, the information must be kept up to date. An *OMP* is required if a building meets one of the following criteria: • building contains asbestos sprayed-on or troweled-on surfacing Materials • frequent renovations/maintenance are occurring that affect asbestos (> 10 / year), or • a significant amount of ACM is in deteriorated condition (>20 LINEAR FEET, > 150 SF, > 3 CF) (aimed at encouraging repair/removal of asbestos rather than implementing administrative procedures) • OMP must be fashioned to building and be easily used: *OMP* Content Guidelines: (can include) • building location • building survey information • a current description of the location and amount of asbestos in Building • Methods of sampling • copy of bulk sample analysis • risk assessments • Description of preventative actions and response actions for friable ACM • information needed to rebut the presumption of asbestos content in building materials • updates in the inventory • list of persons responsible for OMP and its execution • vendor and occupant notification procedures to inform workers and building occupants about inspections, re-inspections, response actions, and post-response action activities • periodic surveillance and re-inspection program and schedule • asbestos work practices to be used • procedures for responding to an asbestos fiber release • exposure assessments • training requirements for staff that may contact asbestos • documentation of abatement that has occurred • documentation of disposition of asbestos waste	**Section 2.5**	-

2030 SBESTOS ABATEMENT (OSHA Class I & II Activities) **Note**: **BST personnel performing this review shall not enter the containment area. Only observations outside the area can be made** **If a project is occurring that does not meet the following criteria, call the Building Service Center and initiate "Stop Work" procedures immediately.**			
4	Have the building occupants been notified of this projects? • per ACP-003 or equivalent	*Appendix D* **Appendix A - Job Aid AWA-006**	
5	If the abatement involves removal of TSI or sprayed on material, do the procedures comply with OSHA Class I requirements? • qualified contractor abating • competent person inspecting • notification signs posted • critical barriers/negative pressure enclosure in place • HVAC Isolation Drop Cloths/plastic in place • wet methods being used • respirators being used • decontamination area in place • mini-enclosures/glove bag requirements met for small areas • 40 hour training for workers/annual refresher complete/up-to-date	*OSHA 1 6.1101*	
6	If the abatement involves removal of flooring, roofing or any other non TSI or non surfacing ACM, do the procedures comply with OSHA Class I I requirements? • qualified contractor abating • competent person inspecting • notification signs posted • Critical barriers/negative pressure enclosure used for jobs > PEL or no NEA or not intact removal • HVAC isolation used for jobs > PEL or no NEA • Drop Cloths/plastic used for jobs > PEL or no NEA • wet methods used • respirators used for all jobs > PEL or no NEA • protective clothing used for all jobs > PEL or no NEA • decontamination area used for all jobs > PEL or no NEA • mini-enclosures/glove bag requirements for small areas • 8-16 hours training or as determined by Competent Person/annual refresher complete and up-to-date	**OSHA 1926.1101**	
7	For lass an activities is regulated area designated clear according to the "Clearance Sampling" protocol?	**.Appendix A- Job Aid AWA-008**	
2030 ASBESTOS NEGATIVE PRESSURE GLOVE			
8	For Class Glove Bag / Box activities are the following procedures used: • does glovebag/box completely cover the circumference of pipe or other structure where the work is to be done. • was Glovebag/box smoke-tested for leaks and any leaks sealed prior to use. • glovebags shall be collapsed by removing air within them using a HEPA vacuum prior to disposal • are at least two persons performing glovebag / box removal operations. • is a HEPA vacuum cleaner or other device used to maintain pressure in bag/ • box	**OSHA 1926.1101**	

2030 ASBESTOS CONTRACTING /DISTURBING ACTIVITIES (OSHA Class III & IV Activities)			
9	If the activity involves disturbing asbestos or presumed ACM, do the procedures comply with OSHA Class I II requirements? • competent person inspecting • post notification signs for other workers present • Critical barriers - jobs > PEL or no NEA • local HEPA exhaust for vacuuming used • drop Cloths used if drilling/cutting/chipping/abrading • wet methods used • respirators used for all jobs > PEL or no NEA or dry removal • protective clothing used for all jobs > PEL or no NEA • decontamination area used for jobs > PEL or no NEA • 16 hours training or as determined by Competent Person/annual refresher is complete or up-to-date	*OSHA 1926.1101*	
10	If the activity involves contacting, but not disturbing asbestos or presumed ACM, do the procedures comply with OSHA Class I V requirements? • competent person inspecting used for jobs > PEL • post notification signs used for jobs > PEL • respirators used for all jobs > PEL • protective clothing used for all jobs > PEL or no NEA • decontamination area used for all jobs > PEL or no NEA • 2 hour training/annual refresher complete and up-to-date	*OSHA 1926.1101*	
2050	***ASBESTOS DISPOSAL FOR ABATEMENT ACTIVITIES***		
11	*Note for questions 11-13: If the asbestos disposal is not a part of an abate-project, review the disposal under the "Hazardous Material/Waste Management Compliance Review"* Is ACM Containerized properly? • ACM being bagged in leak proof container • Are there Markings on the bags indicating that they contain ACM	*OSHA 1926.1101*	
2020	**TRANSPORTING ASBESTOS WASTE FOR ABATEMENT ACTIVITIES**		
12	***Is ACM being transported properly*** • Is the vehicle marked to indicate ACM is being placed onboard? EPA – NESHAP • Are there markings to indicate the vehicle will be hauling ACM?		
13	*Is the Waste Shipment Record completed and handled correctly?* • Contractor - correct information • Transporter – correct information • Landfill approved by BST - Environmental Vendor Evaluation Team • Landfill operator signature	**Appendix E** **EPA-NESHAP**	
2090 ASBESTOS RELEASE RESPONSE			
14.	*Have Asbestos Release Response Procedures been properly implemented?* • BST notified • restriction of air flow to area implemented • area restricted to entry by unauthorized personnel • debris saturated using wet methods • building occupants informed	*Appendix A - Job* **Aids AWA-009 and AWA-010**	
15.	***Has Asbestos Release Response been properly documented?*** • Complete Spill/Release Clean-up Report and place in HM/W Management Files	*Appendix A -,To* **Aids AWA-009 and** **AWA-010**	

NOTICE

THIS BUILDING CONTAINS ASBESTOS
CONTAINING MATERIALS (ACM)

DO NOT DISTURB ACM WITHOUT FOLLOWING
PROPER PROCEDURES

CONTACT_____at _____TO
VIEW THE OPERATIONS AND MAINTENANCE PLAN
or TO REPORT DAMAGED ASBESTOS

Appendix G – Asbestos Forms

Exhibit 9 - Notice of Asbestos (OMP Building)

DANGER

ASBESTOS

CANCER AND LUNG DISEASE HAZARD

Authorized Personnel Only

Exhibit 10 - Notice of Asbestos Regulated Area

Page G-14

Chapter 3
Asbestos Managerment

1. General

1.1 Purpose

This chapter presents the methods and procedures to be implemented by affected BellSouthdepartments and their vendors to ensure that work conducted around Asbestos ContainingMaterial (ACM) is performed safely and is properly managed.

These work practices are necessary to minimize the possibility of a release of asbestos fibers into the environment and to maintain safe working conditions in our buildings and during work activities.

Asbestos is highly regulated by Federal, State, and Local environmental and occupational safetyand health agencies, due to the established link between breathing asbestos fibers and certain cancers and pulmonary diseases.

Examples of Materials that may Contain Asbestos in BellSouth		
Building Materials • BST Buildings • Customer Premise Buildings	**Surfacing Materials** • sprayed-on (i.e fireproofing, textural paint, acoustical ceiling) • Firestop troweled-on (i.e. plaster, stucco) **Thermal System Insulation (TSI)** • pipe insulation • pipe fitting insulation • boiler insulation • tank insulation • duct insulation • generator exhaust • Insulation • muffler insulation • flue insulation • IIVAC Unit/Fan insulation	**Miscellaneous Materials** • Resilient Flooring (i.e. floor tile, linoleum) • Mastics (i.e. floor tile, baseboard, ceiling tile) ceiling tile) • Transite/cementitious (i.e. siding, conduit, cooling tower fill) • Wallboard Systems (i.e. drywall/joint compound) • Building Insulation • Roofing (i.e. flashing, patching, field) • Ceiling Tile • Caulking (i.e. window, equip.) • Electrical Panel Partitions • HVAC Expansion Joints • Vibration dampers • Firestop • Electrical Boxes • Building Putty • Gaskets
Outside Plant Materials	**Miscellaneous Materials** • Transite conduit ("C") fiber cement	
Central Office Equipment Materials	**Miscellaneous Materials** • electrical power boards • gaskets found in stand-by generator exhaust stacks • insulating washers found in electrical equipment **Thermal System Insulation (TSI)** • thermal insulation around engine exhaust stacks, and electrical panels	
Fleet Vehicular Materials	**Miscellaneous Materials** • brake pads • clutch pads	

1.3 BellSouth Program

BellSouth's Asbestos Management Program is focused on three primary areas of activity where BST is more impacted by asbestos. These include:

- Asbestos Management in Buildings
- Asbestos Management in Network Activities
- Asbestos Management in Fleet Maintenance

This chapter is organized according to these three areas, and provides job aids and tables to facilitate understanding.

Throughout this document, procedures and processes have been developed to reflect the following guiding principles:

- strict adherence to regulations,
- open communication of the presence of asbestos,
- provide training in asbestos as it relates to job responsibilities,
- avoid the use or installation of asbestos containing products
- avoid disturbance of asbestos as first choice,
- and follow proper procedures when distributing asbestos

1.4 Qualified Asbestos Manager

BST has chosen to designate certain individuals as a "Qualified Asbestos Manager (QAM)". BellSouth will also designate persons in HRCS Environment/Safety organization as competent Asbestos Persons to serve as overall subject matter experts for asbestos. While these persons will not have full responsibility for asbestos management decisions, the role of these individuals would be to be available to perform the following functions as requested:

- assess the condition of the asbestos
- evaluate risk of asbestos to building occupants and/or workers
- serve as BST representative to provide oversight to ensure these procedures are followed

The Qualified Asbestos Managers and the Competent Asbestos Persons require training according to the guidelines in Appendix I.

The following table represents the selected QAMs and their responsibilities:

Department	**Job Titles**	**Primary Focus**
Environmen-	▪ Area Safety Managers	▪ serve all departments as requested
tal/ Safety	.	
QAMs _	▪ Area Environmental Managers	▪ serve as BST representative to provide oversight to ensure these
	▪ Zone Managers	procedures are followed by conducting reviews at buildings
		and by conducting reviews
	▪ Technical Program Managers	during work activities
		▪ provides regulatory interface, as
		appropriate
Network	▪ Network Safety Headquarters	▪ serves Network as requested
QAMs	Managers	
		▪ serve as Network representative to
	▪ Network Safety Managers	ensure these procedures are followed
	▪ Network Technical Support	
	Managers	
Property and	▪ Environmental Technical	▪ serves P&SM as requested
Services Man-	Program Manager	
agement	▪ Departmental Environmental	▪ serve as P&SM representative to
(P&SM) QAMs	Coordinator	ensure these procedures are followed

Overall Asbestos Program Management will be provided by the BellSouth Industrial Hygiene Manager in the Environmental/Safety organization

2. Standards for Asbestos Management in BST Buildings

2.1 Scope

This section applies to all company buildings that are owned or leased by BellSouth. Asbestos Management in leased buildings is the responsibility of the building owner, although BST is
generally responsible for asbestos abatement during renovation in those buildings.

NOTE: Throughout this section and its appendices, whenever the terms ACM , Asbestos Material or Asbestos Containing Material are used, it is meant to also include (where not specifically mentioned) all material that is presumed to contain asbestos or "Presumed Asbestos Containing Material (PACM).

2.2 Responsibility

2.2.1 Departmental Responsibility

Property and Services Management (P&SM) has the major responsibility for activities in this section, although other departments have responsibility as follows:

Department	Responsibility at Building
Property and Services Management	▪ identification of ACM ▪ provide information about asbestos in buildings through the Building Service Center (BSC) ▪ maintenance of ACMs ▪ repair of damaged ACM ▪ abatement of ACM ▪ review of building material for asbestos prior to construction, renovation, demolition or maintenance projects implementation of work practices as required by OSHA ensure work is performed in compliance with this method ▪ communication of asbestos status in buildings (see Appendix D

Network / Co- Located Occupants Network/ Co-Located Occupants	▪ ensure a review of asbestos building material affected by a project is completed prior to the project commencement ▪ ensure a review of asbestos building material affected by a project is completed prior to the project commencement ▪ ensure work is performed in compliance with this method and OSHA and EPA requirements ▪ include asbestos evaluation in pre-project planning
Environmental and Safety	▪ review of asbestos work practices in BST facilities for compliance with this method ▪ notify building occupants of asbestos abatement projects and asbestos releases

2.2.2 P&SM Program Management Responsibility

BellSouth has chosen to utilize a combination of outside consultants and BellSouth Managers to manage the asbestos program for buildings. This section utilizes the following job responsibilities and titles in all discussions. Figure 1 illustrates the relationship of these entities.

Title	Responsibilities
Asbestos Management Vendors	
Lead Architectural/Engineering Consultant (Lead AE)	▪ develops structure & format of asbestos surveys & database ▪ a manages the State Asbestos Consultants by providing oversight of all State Asbestos Consultants to ensure consistency of surveys & reports, and consistency among state programs manages Asbestos Work Permit System ▪ approves abatement project scope if quantities exceed M&P guidelines (see 2.8.1) ▪ identifies program efficiencies, & assists in overall program evolution ▪ manages primary survey records
State Asbestos Consultant (may be Lead AE)	▪ assists Facility Manager (FM) , Project Manager (PM) and Environmental/Technical Program Managers (ETPM) to determine if asbestos is present in scope of work ▪ responsible for completion of all BSALLIP (BellSouth Asbestos and Lead Liability Insurance Program) related asbestos abatement project forms ▪ develops plans and specifications for asbestos abatement projects, as necessary ▪ performs asbestos surveys
BST Management	
Property & Services Man-Agement (P&SM) Depart-mental Environmental Coordinator (DEC)	▪ provides oversight of the P&SM asbestos management program ▪ manages the Lead AE
P&SM Project Manager (PM) or Program manag-er (PM)	▪ ensures that asbestos presence is considered prior to initiating any renovation, construction, or demolition by conforming to P&SM's asbestos work permit system ▪ seeks approval of Lead AE for abatement projects above guidelines (see section 2.8.1 for guidelines) ▪ manages abatement projects, as appropriate
P&SM Facility Manager (FM)	▪ ensures that presence of asbestos is considered prior to initiating Any building maintenance or repair by conforming to P&SM's Asbestos Work Permit System ▪ seeks approval of Lead AE for abatement projects above guidelines (see section 2.8.1 for guidelines) ▪ manages small scale asbestos projects (may be delegated to Lead AE)
Building Service Center (BSC)	▪ receive and route calls related to damaged asbestos, release of asbestos, and inquires into the location of asbestos in a particular building

2.4 Identification of Asbestos

2.4.1 Types of Surveys to Identify Asbestos

The process for identifying asbestos consists basically of collecting a sample and having it analyzed for the presence of asbestos. Sampling for asbestos can occur as part of a facility widesurvey or on a "need to know" basis. At BST, the scope of this type of identification is discussed in the following tables. Job Aids which describe the details of each identification process arecontained in Appendix A.

Protocol	Description	When Used	See Job Aid
Baseline Survey	An initial survey performed in a building to determine the location of any asbestos	Required before purchasing or leasing a building	AWA-001
Updated Baseline Survey	A repeat survey performed in a building to further define the presence or absence of asbestos. It must follow the EPA- Asbestos Hazard Emergency Response Act (AHERA) Protocol.	As needed, determined by a business decision (section 2.7.1.3)	AWA-002
Pre-Project Survey	Survey performed prior to building work that may disturb asbestos	Prior to any activity in a building that May disturb building material	AWA-003
Presumed Asbestos Survey	A survey performed on building material that is presumed to contain asbestos, hence called "Presumed Asbestos Containing Material" (PACM). This presumption is made in the absence of a survey that conforms to the AHERA protocol, and applies to all Thermal Systems Insulation, Sprayed or Trowelled Surfacing, and Floor Tile, if the building was built or the material was installed prior to 1981.	When no baseline survey is available	AWA-004 Li
Damaged Asbestos Survey	A survey performed on damaged asbestos	After damaged asbestos is reported to the Building Service Center BSC	AWA-005

2.4.2 Asbestos Inventory

In lieu of maintaining detailed building inventories at each building, BST has chosen to utilize a combination of signs and labels to direct occupants and vendors to the Building Service Center (BSC) or the local asbestos operations and maintenance manager (at sites with Operations and Maintenance Plans - OMPs - see 2.5.2) for further information. The BSCwill direct calls to the appropriate source of detailed information Posting these signs and labels will be the responsibility of P&SM. Detailed asbestos inventoriesdata will be available via the BSC.

2.4.3 Asbestos Free Assurance

While asbestos has been banned for some uses, it is remotely possible that asbestos fibers are still in some building products being installed by BST It is therefore required that future use of ACM's be avoided through controls included in contract documents and specifications. Contractors should be required to submit "Asbestos-Free" certification for certain building products that have been known to contain asbestos fibers in the past (see Section 1.2 for typical materials).

There is no regulation prohibiting the use of asbestos in roofing materials. Consequently, it is possible that ACMs continue to be placed in BellSouth buildings. In order to alleviate this possibility, it is required that no asbestos containing roofing materials be used on BellSouth buildings after January 1, 1998.

2.5 Maintenance of Asbestos

2.5.1 General

Since the material that contains asbestos was installed to serve a purpose (insulation, floor covering, fireproofing, etc.), a building should maintain that material in good condition so that it continues to serve its original purpose.

However, because of the presence of asbestos, any damage to these materials should be sealed, repaired, replaced, or removed with appropriate urgency in order to prevent the release of fibers.

The following table gives examples of building materials, and the conditions that normally require attention to prevent the release of asbestos:

Building Material	Condition
Floor Tile Asbestos Shingles	▪ broken, loose or crumbled
Pipe insulation Pipe Joints Sprayed-on Material Boiler Insulation Duct Insulation	▪ wet ▪ loose and hanging off • cracked and flaking

Additionally, there are several aspects of area usage that must be considered when asbestos maintenance is being considered. Examples are: what is the room used for; how much foot traffic can be expected; is the usage of the room about to change (low use to high use); and, is the area an air return plenum?

Section 2.6, "Damaged Asbestos" provides more detailed information concerning assessment and action for damaged asbestos.

2.5.2 Operations and Maintenance Plans

Some buildings may require an "Operations/Maintenance Plan" (OMP). These plans outline specific procedures to be followed at a particular facility and are designed to address specific situations in a building. If an OMP is implemented, it is required that the plan be used, followed, and kept current.

An OMP is required if a building meets one of the following criteria:

- building contains asbestos sprayed-on or troweled-on surfacing materials
- frequent renovations/maintenance are occurring that affect asbestos (> 10 / year), or
- a significant amount of ACM is in deteriorated condition (>20 linear feet, > 150 square feet, > 3 cubic feet) (aimed at encouraging repair/removal of asbestos rather than implementing administrative procedures)

Note: **Alternate decisions regarding the need for an OMP must be documented and approved by the P&SM Departmental Environmental Coordinator.**

The content of the OMP may include or reference, as appropriate:

- building location
- building survey information
- a current description of the location and amount of asbestos in building
- Methods of sampling
- copy of bulk sample analysis risk assessments
- description of preventative actions and response actions for friable ACM
- information needed to rebut the presumption of asbestos content in building materials
- updates in the inventory
- list of persons responsible for OMP and its execution
- vendor and occupant notification procedures to inform workers and building occupants about inspections, re-inspections, response actions, and post-response action activities
- periodic surveillance and reinspection program and schedule
- asbestos work practices to be used
- procedures for responding to an asbestos fiber release
- exposure assessments
- training requirements for staff that may contact asbestos
- documentation of abatement that has occurred
- documentation of disposition of asbestos waste

This plan should be designed for specific buildings and easily usable. It is to be kept at the building in the office of the person designated to implement and maintain it.

Generally, this plan will be developed by the Lead AE.

2.5.3 Additional Operational Procedures

OSHA specifies additional requirements/restrictions for certain building maintenance operations. Accordingly, Appendix A contains a Job Aid on the following operational activity:

Job Aid #AWA-007 "Flooring Maintenance Activities"

2.6 Damaged Asbestos

2.6.1 Asbestos Damage Reporting to the BSC

BST has chosen to ensure asbestos is maintained in good condition by requiring building occupants and contractors to report any damaged asbestos containing material or damaged presumed asbestos containing material to the Building Service Center (BSC).

The Building Service Center numbers are:

NC, SC, GA, FL:	780-2740
MS, LA, AL, TN, KY:	557-6194

The BSC will contact the Facility Manager (FM) to assess the situation. The FM will contact an appropriate consultant/contractor to repair or abate the ACM, as necessary.

2.6.2 Damaged Asbestos Protocol

The following protocol will be used by Property and Services Management to determine the appropriate action for the damaged asbestos that could potentially result in a fiber release. Generally, the Facility Manager will have this responsibility.

Step	Action
1	Facility Manager receives work order from BSC.
2	Facility Manager visits the site and contacts the Lead AE to access building records to determine if asbestos is present
3	Facility Manager determines if material requires evaluation by State Consultant. (State Consultant will not be required if material - via labeling or knowledge - is clearly not asbestos and/or if there is clearly no damage to the material. In this case, the FM will simply address the situation as non-ACM). If State Consultant is required, proceed with Step 4, otherwise close out BSC work order ticket.
4	FM notifies appropriate Regional Safety Manager to initiate Communication Protocol ACP-004
5	State Consultant performs site visit to collect information on the condition of the asbestos. (sampling and analysis may be necessary- Follow Job Aid AWA-005 - Damaged Asbestos Surveys)
6	State Consultant assigns points for asbestos condition, location, type and quantity Using the Asbestos Assessment and Decision Table.
7	State Consultant utilizes the "Action Response" section of the "Asbestos Assessment and Decision Table" found in 2.6.3 to determine action for damaged asbestos. If amount of asbestos is greater than guidelines in 2.8.1, State Asbestos Consultant confers with Lead AE to determine appropriate action.
8	State Consultant directs repair to damaged asbestos according to the "Asbestos Assessment and Decision "Table criteria.

NOTE: **Damanged asbestos may also be identified during an Environmental/Saftey compliance review. This same protocal will be used by E/S managers to identify action for damanged asbestos, and will be called into the BSC for assignment and completion.**

2.6.3 Asbestos Assessment and Decision Table

The following table should be used to assess and determine action required for damaged asbestos:

Damaged Asbestos Assessment And Decision Table		
Type (T)	**Points**	**Material Type**
	0	Non asbestos
	1	Transite / Cementitious Material
	2	Vinyl Asbestos Floor Tile
	3	Caulk, Wallboard, Firestopping
	4	Thermal System Insulation
	5	Material sprayed or trowelled on
Condition(C)	**Points**	**Material Condition**
	1	Slight damage - non-friable, low potential or disturbance
	2	Slight Damage - friable, low potential or disturbance
	3	Moderate damage - friable, low to moderate potential for distur-Bance
	4	Moderate damage - friable, moderate to high potential for distur-bance (in air stream)
	5	Extreme Damage - friable, high potential for disturbance (in air stream) .
Location (L)	**Points**	**Material Location**
	1	Locked / unused area; outside facility
	2	Locked or unlocked with limited access - occasionally used (Boiler Room, Cable Vault, Crawl Space)
	3	Mechanical Room (not a plenum)/moderate activity; Unoccupied open space-switch room, basement
	4	Moderate Occupancy Room admire space 2-5 people
	5	High Occupancy (> 5 people); high traffic area (hallways, entrance, restrooms), if AHU Room is a plenum
Quantity (Q)	**Points**	**Material Quantity (refers to quantity of damaged material only)**
	1	Minor amount 1-2 sq foot, 1-6 inches
	2	Small 2-4 sq ft,, 0.5-2 linear feet
	3	Moderate 4-50 sq ft, 2-50 linear feet
	4	Large 5 - 270 sq t, 5 -16 linear feet)
	5	Significant > 270 sq ft, > 160 linear feet

Damaged Asbestos Action Required (T x L x C x Q = Action Score)		
Range of Scores	Category	Action
0	N/a	NO ACTION
1-15	I	Monitor only
6-25	11	Repair/Abate within one year
26-100	111	Limit access to area; Communicate to Building Occupants - ACP-004 Repair/Abate within 6 months

101-255	IV	Limit access to area; Communicate to Building Occupants - ACP-004 Stabilize asbestos within 1 week Implement Corrective Action Within 3 months Implement "Operations and Maintenance Plan" until abatement Occurs
257-625	V	Secure area, Communicate to Building Occupants - ACP-004 Stabilize within 1 week Implement Corrective Action Within 1 month Implement "Operations and Maintenance Plan" until abatement occurs

Notes:

- *"Friable"* means a material that can be crumbled, pulverized or reduced to powder by hand pressure.
- ***"Abate"*** means repair, encapsulation, enclosure, or removal of ACM.

2.7 Asbestos Considerations During Construction, Renovation, Maintenance or Demolition Activities

2.7.1 BellSouth Responsibilities

Many activities which could disturb asbestos will be performed by outside contractors. **BellSouth has a responsibility to <u>inform</u> the contractor when work will be performed in or adjacent to areas where there are Asbestos Containing Materials (ACM) or Presumed ACMs (PACM).**

Prior to initiating any construction project in a BellSouth building, the following procedures found in Appendix A, must occur to determine the presence or absence of asbestos:

Follow one of the protocols listed below when conducting asbestos surveys (see 2.7.1.3 to determine appropriate protocol):

AWA-002 "Updated Baseline Surveys
AWA-003 "Pre-Project Surveys"
AWA-004 "Presumed Asbestos Surveys"

Job Aid AWA-012 "Pre-Project Asbestos Considerations" provides the overall process to be followed when planning a project which might impact asbestos.

2.7.1.1 Applicability

This procedure applies to **<u>ALL</u>** projects in **BST** that involve renovation, construction, demolition, maintenance or repair, and installation of equipment that affects building material that contains or is "presumed to contain" asbestos.

This affects the following departments and activities**:**

Department	**Examples**
Property and Services Management	▪ Modifications to HVAC Systems ▪ Floor Replacement ▪ Building Renovation ▪ Roofing Replacement
Network Capacity Management	▪ Power equipment installation / removal
Network Central Office	▪ Central office switching equipment installation and removal

2.7.1.2 When Required

This procedure is required during the initial planning and design phase of any project and prior to the initiation of any maintenance or repair activities.

In an emergency (water main break, restoring, service during a natural disaster), a determination will be made by the Property and Services Management - Lead AE in conjunction with the State Asbestos Consultant as to the appropriate action. The decision will be made utilizing all available survey data and by conferring with the Facility Manager and the Area Environmental Manager to make a decision as to whether abatement is necessary.

2.7.1.3 Appropriate Action

Based on the frequency of projects and the potential amount of asbestos in a particular facility, Property and Services Management - Lead AE should decide whether to complete a limited "Pre-Project Survey" or an "Updated Baseline Survey" for the entire building. Alternately, the Lead AE could decide to fore-go sampling and analysis, presume the building material contains asbestos and conduct the modified "Presumed Asbestos Survey".

The following table presents the advantages and disadvantages of each:

Survey	Advantages	Disadvantages
Pre-Project Survey Survey performed prior to Building work that may disturb Asbestos. (Appendix A - AWA-003)	▪ Focuses on project area ▪ Eliminates non ACM from Abatement ▪ Limits costs	▪ May not address entire building
Updated Baseline Survey A repeat survey performed in a Building to further define the Presence or absence of asbes-tos. It must follow the AH-ERA Protocol. (Appendix A - AWA-002)	▪ Additional detailed pre-work surveys are minimized	• Costs are increased to complete survey
Presumed Asbestos Survey An assumption that is made in the absence of a viable survey That all Thermal Insulation Material; Surfacing Material And Floor tile contain asbestos if the building was built prior to 1981, or the Floor Tile was Installed prior to 1981. Hence called "Presumed Asbestos Containing Material" (PACM). (Appendix A - AWA-004	▪ Detailed sampling and analysis is not required ▪ Reduced costs for Survey ▪ May be the only alternative during an emergency	▪ Site visit to quantify and provide location of PACM is still required ▪ Increased costs for asbestos abatement ▪ Unable to determine if approach is the most economical

Note: "AHERA" Protocol refers to the *"Asbestos Hazard Emergency Response Act"* **found in 40 CFR 763. The protocol describes the minimum requirements to sample, analyze, and perform risk assessment on asbestos in buildings.**

Caution: It *is* **permitted for anyone to assume a material contains asbestos. However, it is not permissible to assume a material does not contain asbestos, unless the material is generally known to be unrelated to having asbestos. (See Table in paragraph 2.7.1.4)**

Caution: For buildings constructed after 1980, asbestos may be present. You are obligated to identify the presence, location, and quantity of any known or presumed ACMs in the structure and the components of your building.

2.7.1.4 When to Sample

The following table represents guidelines that should be used when determining when to sample materials located in a project area before work is performed at BST buildings.

If..	**Then....**	
An AHERA survey has already been performed	Rely on the survey to make a decision for the project. Collect and analyze additional samples only as new material is uncovered in the project. Examples: ▪ new material is discovered in wall ▪ new layers of material are discovered in flooring/roofing	
An AHERA survey has not been per-Formed	Presume unsampled areas to contain asbestos, or Rebut presumption by collecting samples (see below for additional guidance)	
	If the material affected is ▪ wood ▪ Concrete ▪ fiberglass (yellow, pink) ▪ plastic ▪ glass ▪ carpet ▪ synthetic material ▪ metal	Do not sample, assume no asbestos Is present.
	If the remaining material was installed after 1980 and a "Certification of Asbestos-Free Material" is available for the material	Do not sample, assume no asbestos was present
	If the remaining material was installed before 1981 or if the remaining material was installed after 1980 and a "Certification of Asbestos-Free Material" is not available	Sample this material to rebut the presumption of asbestos containing

Note: This table should be used for guidelines purposes only. Additional guidance can be obtained from a BST "Qualified Asbestos Manager" or the Lead AE.

2.7.1.5 Work Permit

The "Work Permit" (shown in Exhibit 6 of Appendix G) will serve as a permit to proceed with construction, maintenance, repair, renovation, or installation activity after an evaluation of asbestos presence is made. This document must be fully executed according to Job Aid AWA-012 (Appendix A) and the following section.

This document will also serve as BST's permanent documentation that asbestos was properly considered prior to the beginning of projects.

2.7.1.6 Evaluation Procedure for Renovation. Demolition, Construction, Maintenance, and Repair

The following flow chart represents the procedure to be followed when a renovation, demolition, construction, maintenance, installation, or repair is to be conducted outside of the Lead AE program:

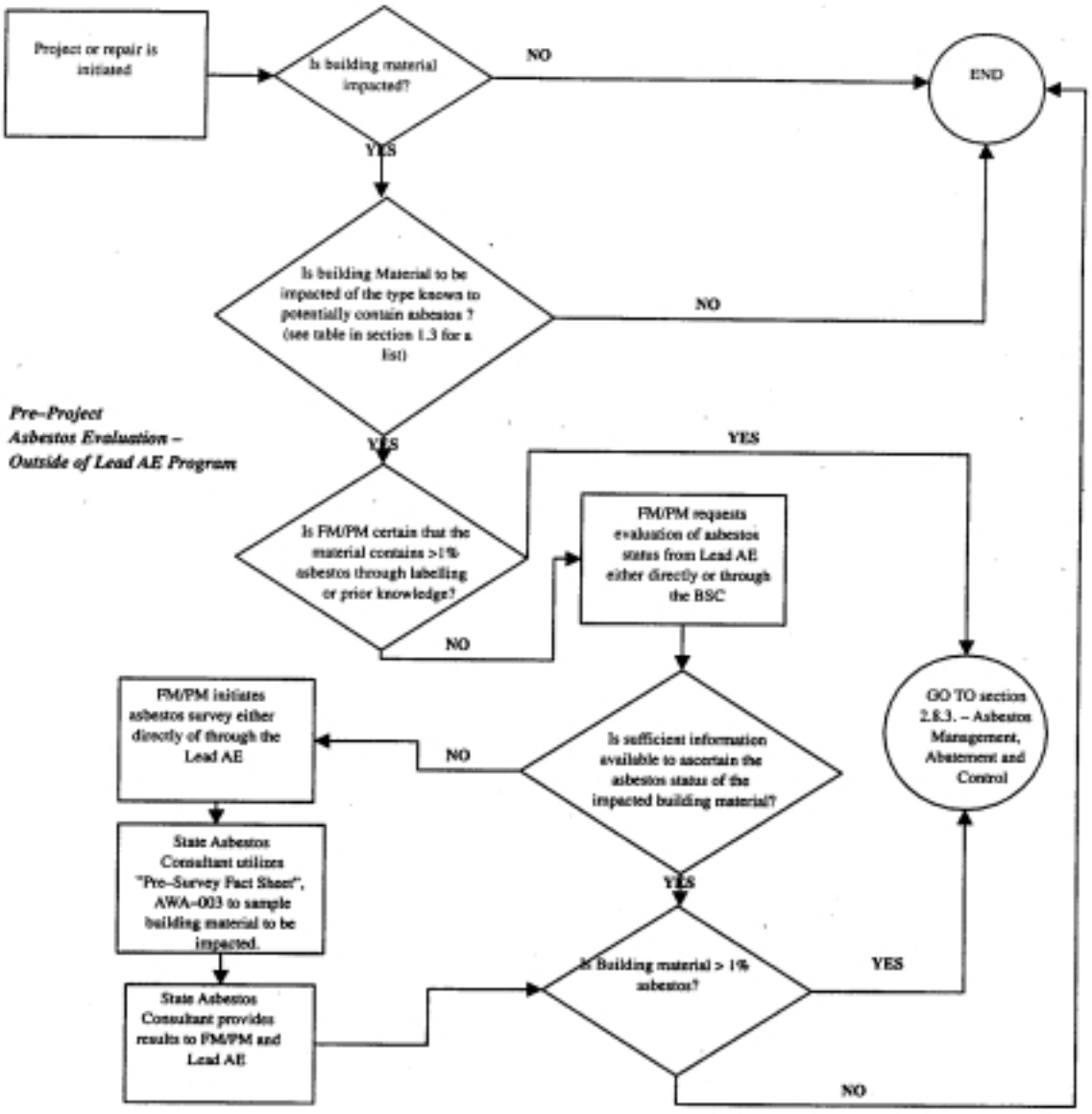

PRIVATE/PROPRIETARY

CONTAINS PRIVATE AND/OR PROPRIETARY INFORMATION.
MAY NOT BE USED OR DISCLOSED OUTSIDE THE BELLSOUTH COMPANIES
EXCEPT PURSUANT TO A WRITTEN AGREEMENT.

The following flow chart represents the procedure to be followed when a renovation, demolition, construction, maintenance, installation, or repair is to be conducted within the Lead AE program:

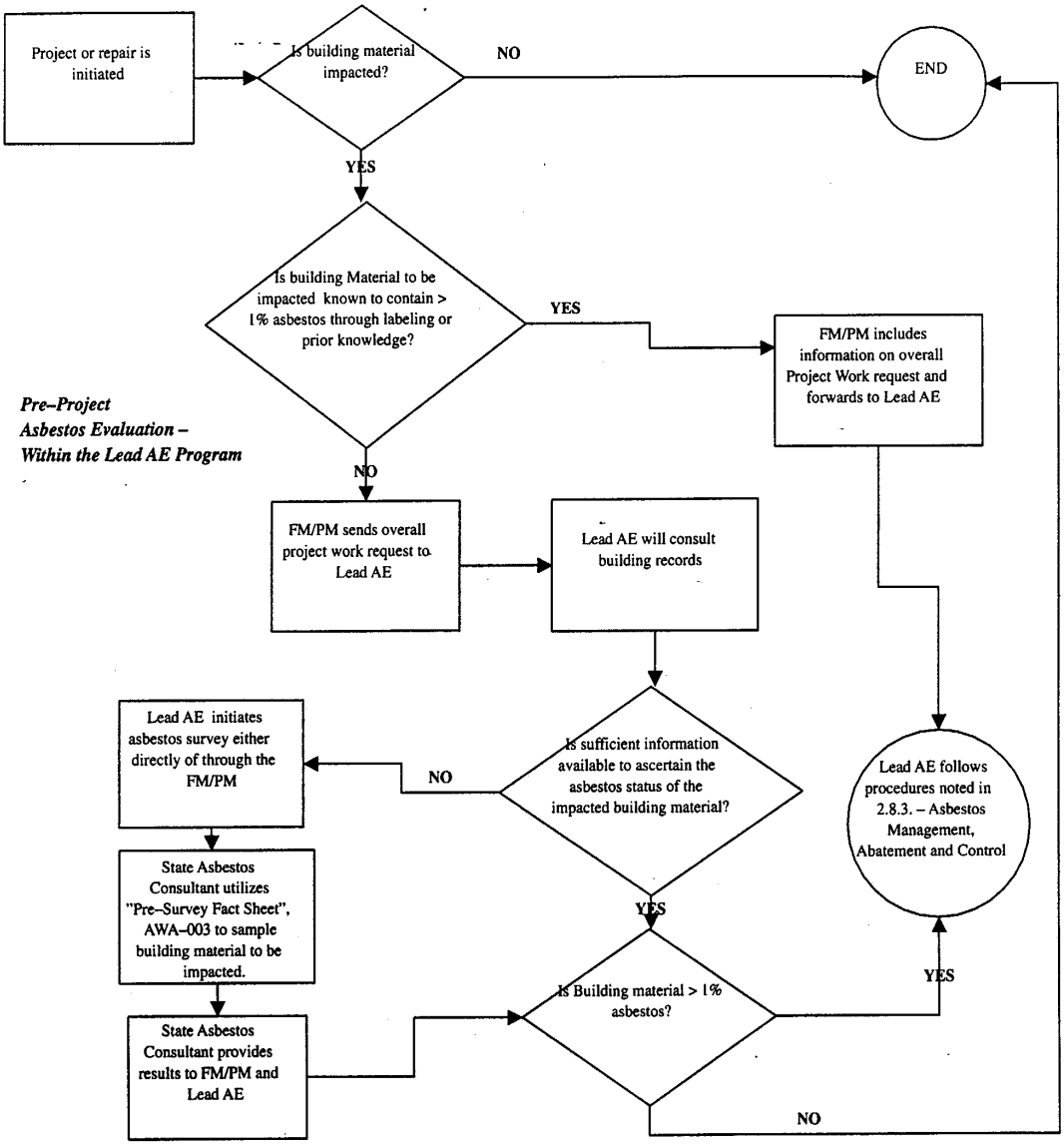

2.7.2 Vendor Responsibilities

2.7.2.1 Approach

It is the responsibility of the building owner to provide asbestos information to vendors that may perform work in BST buildings. However, because a vendor also has a responsibility to their employees, BST has expectations of vendors to take some initiative to ensure that all potential asbestos has been considered prior to any disturbance.

PRIVATE/PROPRIETARY

CONTAINS PRIVATE AND/OR PROPRIETARY INFORMATION.
MAY NOT BE USED OR DISCLOSED OUTSIDE THE BELLSOUTH COMPANIES
EXCEPT PURSUANT TO A WRITTEN AGREEMENT.

Because of the importance of the issue of proper considerations for asbestos, this section is included to provide additional controls for vendor activities.

2.7.2.2 Contract Language

During Contract development and renewal contract managers should provide the following information to all BST vendors:

Description	**Clause**
General - all contracts	**Renovation/Demolition/Maintenance** "Many BellSouth facilities contain ACMs (ACM). All contractors should contact the Building Service Center (BSC) for information concerning the location of asbestos to assess building material for ACMs (ACM), prior to performing any activity which may disturb ACM. Contractors are responsible for ensuring compliance with all federal, state, municipal and local requirements regarding asbestos. " **New Construction** Installation of new building materials that contain asbestos is strictly prohibited by BellSouth. Contractors must submit "Asbestos -Free Certification" for building products that have been known to contain asbestos.
Flooring Main-Tenance	The following operations are prohibited or restricted: **Sanding** of asbestos-containing flooring material **Stripping** of finishes must be conducted using low abrasion pads at speeds lower than 300 rpm and wet methods **Burnishing or dry buffing** may be performed only on asbestos-containing flooring which has sufficient finish so that the pad cannot contact the asbestos-containing material.
Construction, Maintenance, Repair and	BST expects these employers to take specific measures to protect all workers should the work involve building materials: ▪ Contact BSC/Facility Manager/Project Manager/Building Owner to obtain information about asbestos involved in project ▪ Implement the following, as appropriate, should asbestos be present and/or disturbed during the work operations: ▪ appropriate training of workers ▪ engineering controls as found in OSHA Work Practices, ▪ appropriate work practices and procedures, ▪ respiratory protection, depending upon the nature and extent of the work and on the results of an initial exposure assessment. ▪ additional measures, depending on the exposure levels, which include the use of protective clothing, enclosed areas, special work practices, recordkeeping, worker training, supervision by appropriately trained competent persons, medical surveillance of exposed workers, respirators, and communication of information about hazards to your employees.

2.7.2.3 Obtaining Asbestos Location Information

The following is required of all vendors that perform work that may disturb asbestos in BST buildings.

Small Projects Where Vendors are Dispatched Directly to Facility Any vendor that is performing work that has a potential to disturb ACM must determine if asbestos is present by:

- observing signs / labels of affected material prior to conducting work, and
- contacting the Facility Manager (FM) or the BSC for more information, or
- alternately, assume material to contain asbestos (PACM) (follow the table in 2.7.1.4 for additional guidance)

Large Projects Where Asbestos is considered in Pre-planning

- For these projects, ACM has been identified through contact with the Lead AE, the appropriate measures have been taken to remove the asbestos prior to the project, and the Work Permit has been executed.

2.7.2.4 Adherence to OSHA Work Practices

All employers are required to comply with 29 CFR 1926.1101 or 29CFR 1910.1001 to protect their workers from the hazards of asbestos.

2.7.2.5 Adherence to EPA, State, and Local Regulations

In addition to OSHA requirements, the following also applies:

- EPA Requirements waste disposal - 40 CFR 763
- abatement practices - 40 CFR 763

State and Local Requirements:

- permitting,
- licensing and certification
- training
- disposal

2.7.2.6 Stop Work Procedures

Should any BST employee discover conditions in a building during an asbestos work activitythat are not in compliance with regulations or company policy, "Stop Work" orders may be initiated by calling the BSC. The employee should also immediately contact his/her supervisor.

Step	Action
1	Call BSC.
2	BSC will assign Priority 1 to this request and notify the appropriate Facility Manager to address.
3	Facility Manager will evaluate/confer with State Asbestos Consultant /Lead AE
4	If appropriate, initiate cleanup procedures (Job Aid AWA-010, in Appendix A)
5	If appropriate, evaluate hazards in area by collecting air sampling (State Asbestos Consultant will provide recommendations)
6	Project can not proceed without approval from Facility Manager/Project Manager/ Program Manager under the direction of the State Asbestos Consultant, Lead AE or a representative of the Environmental/ Safe organization.

2.8 Asbestos Abatement and Repair

Abatement refers to removing, encapsulating, repairing, or enclosing ACM. Most ACM in BellSouth buildings is maintained in good condition until abatement is necessitated by renovation, demolition, non-routine activities, or to address damaged ACM. **All abatement activities in buildings require engineering controls to guard against the migration of fibers to occupied areas in the building or into the environment outside the building. The department responsible for this is Property and Services Management who utilizes qualified contractors and consultants to perform this work.**

Appendix A, Job Aid # AWA-006 "Repairing and Abating Asbestos" summarizes the details of this process.

BellSouth, as directed by Risk Management - BellSouth Corporation, has chosen to use an Owner Control Insurance Program for asbestos removal projects. This program will be managed through the "BellSouth Asbestos and Lead Liability Insurance Program" (BSALLIP); the program will be referred to hereafter as BSALLIP The State Asbestos Consultants will be responsible for filing the appropriate forms relating to any given asbestos abatement project, as stated in the "BellSouth Property and Services Management Insurance Procedures". (Not attached)If abatement of building asbestos is required for work directed by departments other than P&SM, that department should notify Property and Services Management to properly abate any asbestos encountered.

2.8.1 Asbestos Abatement Guidelines

Should asbestos abatement be necessary, a review of the project scope must be determined. If the abatement project scope is less than (<) the following quantities, then the Facility Manager or Project Manager may proceed with the abatement project.

- < 150 square feet
- < 20 linear feet
- < 3 cubic feet

All quantities greater than the above must be approved by the Lead AE prior to abatement project initiation.

2.8.2 Building Inventory File Update

Following any-removal, encapsulation, enclosure or repair project the detailed Building Inventory Files shall be updated and maintained by the Lead AE to reflect the following:

- removal of asbestos
- replacement of asbestos with non-ACM
- encapsulation of asbestos
- repair of asbestos

2.8.3 Asbestos Abatement Management and Control

The following chart illustrates the BellSouth internal procedures to be followed to manage asbestos abatement projects:

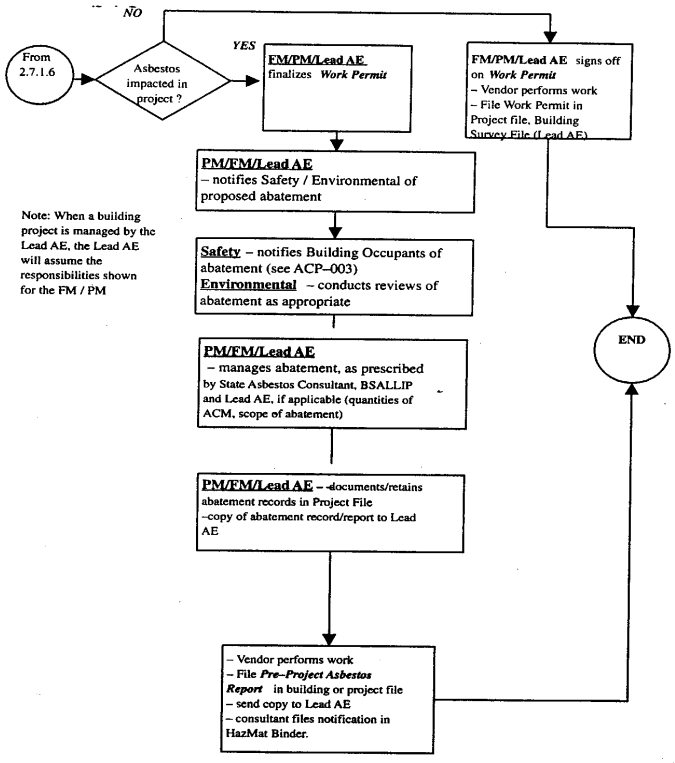

Asbestos Abatement Management and Control

2.8.3 Method of Procedure Requirements

A "Method of Procedure" (MOP) is required for work in certain types of buildings to ensure continuity of service to BST customers. Prior to any asbestos abatement project, the MOP should be prepared and followed. Data Centers and Network Equipment facilities have their own MOP requirements and forms. These forms can be obtained from the respective departments.

PRIVATE/PROPRIETARY

CONTAINS PRIVATE AND/OR PROPRIETARY INFORMATION.
MAY NOT BE USED OR DISCLOSED OUTSIDE THE BELLSOUTH COMPANIES
EXCEPT PURSUANT TO A WRITTEN AGREEMENT.

2.9 Asbestos Disposal

EPA requires that asbestos waste generated from projects be adequately wetted, placed in leak-tight containers, and disposed at an EPA - approved site. Appendix E contains specific information concerning the applicability and process required for proper disposition.

Caution: Only BST-EVET approved transportation and landfill vendors can be used for this process. Exceptions to this will require approval by the P&SM Departmental Environmental Coordinator.

2.10 Asbestos Release Response and Clean-up

BellSouth Policy requires releases of ACMs to be promptly reported to the Building Service Center, responded to and addressed. See Appendix A for Job Aids on Cleaning-up Asbestos and Responding to an Asbestos Release.

2.11 Asbestos Communication

Regulations contain specific requirements for notification of asbestos presence in "regulated areas" of buildings, as well as notification prior to activities involving asbestos. Appendix D contains specific protocols for communication and Appendix G provides examples of signs and labels. These protocols are cross referenced, when needed, in the work activity Job Aids.For the purposes of the communication protocol a *"regulated area'* is defined as:

- the area where asbestos is being disturbed due to abatement, repair or maintenance activities
- an area where no activity is occurring - but due to the nature of the ACM or PACM has a potential for exposure
- an area where asbestos has been released

Specific responsibilities for asbestos communications are included in the Appendix D Job Aids.

If this condition exists	The following communication must occur.	Refer to the Following Protocol, in Appendix D	Refer to the Following Exhibit, In Appendix G
A building contains asbestos or presumed asbestos	Notify persons in facility of the asbestos presence	ACP-001 "Notification of Asbestos Presence"	Exhibit 1 "Notice- Asbestos"
A building contains asbestos or presumed asbestos and has an OMP, based on the criteria in Section 2.5.2	Notify persons in the facility who might contact asbestos	ACP-001 "Notification of Asbestos Presence	Exhibit 9 – Notice – Asbestos in OMP Buildings
A "regulated area" has been identified that may have potential exposure (example mechanical rooms, basements, boiler rooms, standby generator rooms)	Notify persons in regulated areas of the asbestos presence	ACP-001 "Notification of Asbestos Presence"	Exhibit 2 "Danger -Asbestos"

If this condition exists	**The following communication must occur:**	**Refer to the Following Protocol, in Appendix D**	**Refer to the Following Exhibit, In Appendix G**
Specific materials have been identified to contain asbestos or specific materials have been identified to not contain asbestos according to AHERA protocols	Label material (Certain exceptions apply)	ACP-001 "Notification of Asbestos Presence"	Exhibit 3 "Asbestos Labels"
A renovation, demolition, construction, repair, or maintenance project is planned that will disturb asbestos	Notify vendors/ workers who will Be performing the work of the asbestos presence	ACP-002 "Notification of Asbestos Prior to Projects	Exhibit 6 - Work Permit
An asbestos project (disturbance of asbestos) will be occurring	Notify persons in adjacent areas that An asbestos project will be occurring via: ▪ letter format ▪ Posting sign	ACP-003 "Notification for Asbestos Projects"	Exhibit 4 - "Notice - Asbestos Project"
An asbestos release has occurred	Notify persons in Adjacent areas that an asbestos release has occurred via: • letter format • Posting sign	ACP-004 "Notification of Asbestos Release"	Exhibit 5 - "Notice - Asbestos Release"

2.12 Asbestos Documentation

Appendix F summarizes this information for BST Building Documentation. Documentation requirements are also cross- referenced into the work activity Job Aids.

2.13 Asbestos Training

Appendix I summarizes this information. Training requirements are also cross-referenced
into the work activity Job Aids.

3. Standards for Asbestos Management in Network Activities

3.1

Scope

This section applies to all customer premises where BellSouth has been requested to provide service, and where a potential for exposure to Asbestos Containing Material (ACM) or Presumed Asbestos Containing Material (PACM) exists. This section also outlines specific procedures for BellSouth personnel who perform work activities that may disturb asbestos. These activities include those in company owned buildings and plant facilities as well as those in customer owned buildings and facilities.

These procedures have been developed to provide the requirements and the tools for compliance with the relevant Occupational Safety and Health Administration (OSHA) airborne exposure levels and work practices.

3.2 Responsibility

The following responsibilities apply to this section:

Entity/Department	Responsibility
BST/Network	▪ ensure a review is completed of building material/plant facility affected by a project prior to the project commencement ▪ ensure work is performed in compliance with this method, OSHA requirements, and other referenced BST methods ▪ notifies customer of possible asbestos presence that may impede installation/repair of telephone service ▪ identify ACM in BST plant facilities ▪ train employees in asbestos procedures where applicable
BST Network Building Industry Consultant (BIC)	▪ performs customer negotiation when asbestos presence requires special procedures **Note: In those cases where the owner/agent of a large building or complex is unwilling or unable to perform asbestos abatement, and cable/wire must be run through the subject area, the building owner/ agent should be advised that conduit will be necessary. Normally the Building Industry Consultant (BIC) or person performing the BICs function should be involved in customer negotiation.**
BST/Property and Services Management	▪ identify, maintain and abate ACM in BST facilities

Entity/Department	**Responsibility**
BST/Environmental and Safety	▪ serve as Asbestos Competent Person . ▪ review of asbestos work practices for compliance with this method ▪ notify BST building occupants of asbestos abatement projects and asbestos releases
BST Qualified Asbestos Person (see section 1.4 for description)	As requested ▪ assess the condition of the asbestos ▪ evaluate risk of asbestos to building occupants and/or workers ▪ serve as BST representative to provide oversight to ensure these procedures are followed
Building Owner (BST or other)	▪ identify, maintain and abate ACM in owner facilities ▪ notify vendors/contractors in facility of presence of asbestos provide alternate means of working around asbestos

3.3 General Process

The flowchart that follows summarizes the general process that should be followed by Network to properly address work activities that may involve asbestos. Specific work activities (A–1 through A–9) are discussed or referenced in paragraphs 3.5 through 3.12, and are also summarized on "Job Aids" in Appendix B.

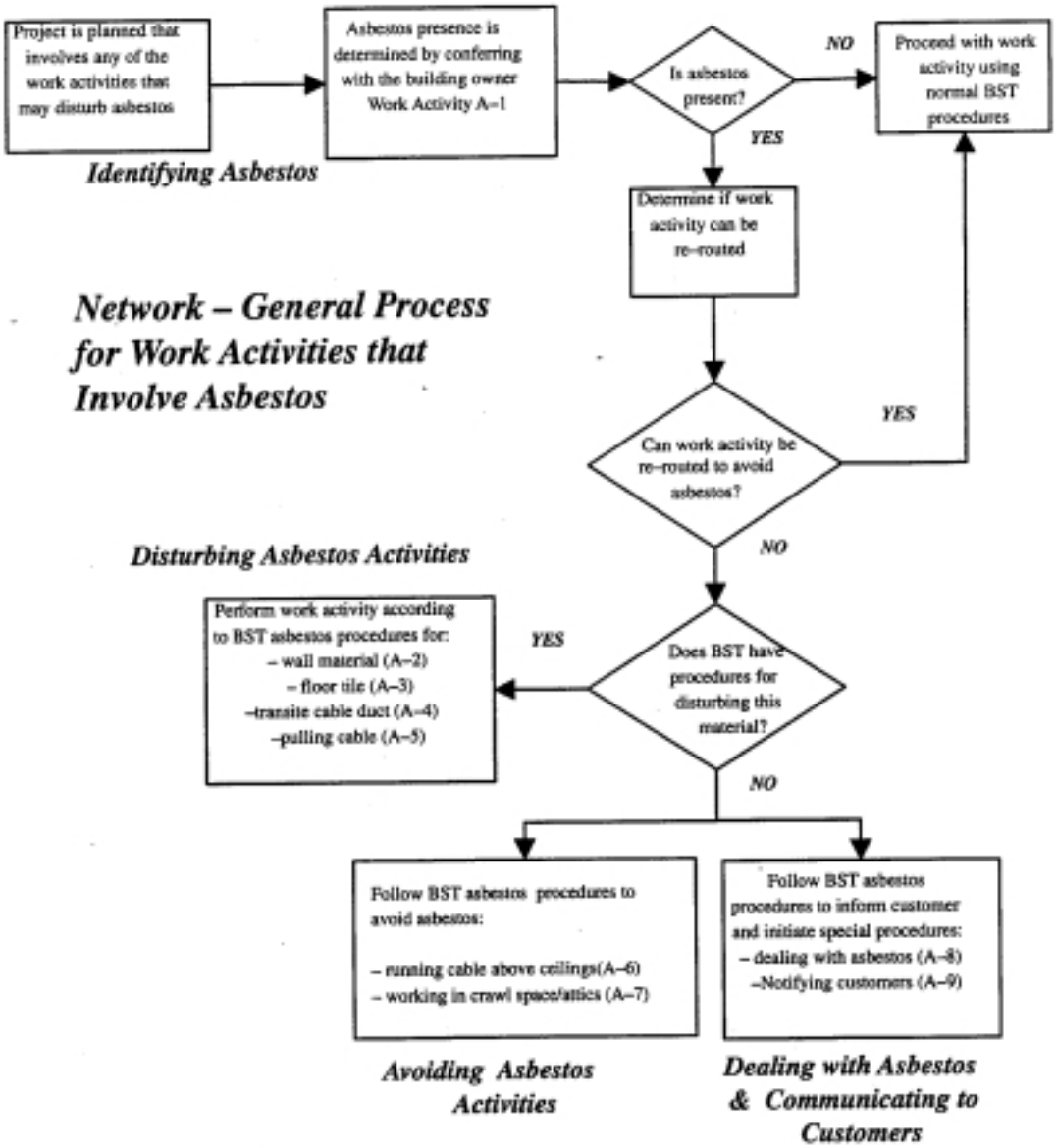

PRIVATE/PROPRIETARY

CONTAINS PRIVATE AND/OR PROPRIETARY INFORMATION.
MAY NOT BE USED OR DISCLOSED OUTSIDE THE BELLSOUTH COMPANIES
EXCEPT PURSUANT TO A WRITTEN AGREEMENT.

3.4 Applicable Network Work Activities

The chart below identifies certain work activities that may disturb asbestos. These are listed by number and description of the activity performed.

Type of Activity	**Work Activity Number**	**Description of Activity**
Identifying Asbestos	A-1	Identifying Asbestos in Network Work Activities
Disturbing Asbestos	A-2	Drilling holes through wall material (transite paneling, plaster, Dry wall, joint compound)
	A-3	Drilling holes through vinyl asbestos floor tile (VAT)
	A-4 (Reference Only - also see Job Aid AWA-019)	Breaking transite conduit to repair cable. Refer to BSP 622-395-301SV "Main Conduit - Asbestos Conduit Repair" for proper procedures. ,
	A-5 (Reference only)	Removing underground cable from transite conduit. Refer to BSP 620-100-010 for proper procedure to apply "wetting down" method to the duct entrance in order to avoid occupational exposure to airborne particles associated with this type of removal. *NOTE:- The liquid wetting agent described in para. 2.06 is required in the presence of lead cable removals only. All other types of cable may be treated with an ordinary water applica-Tion..*
Avoiding Asbestos	A-6	Running cable above suspended ceiling
	A-7	Working in attics, crawlspaces, and other areas where ACM is present
Dealing with Asbestos	A-8	Dealing with Asbestos if Unavoidable
Communication	A-9	Telling Customers about Asbestos

NOTE: No asbestos disturbing activities should be performed unless personnel are trained to do so.

3.5 Work Activity A-1 Identifying Asbestos in Network Activities

Refer to the table in Section 1.2 for examples of ACM. The following table provides additional guidance to determine if asbestos is present. (Job Aid AWA-013 provides a quick reference).

If..	**Then….**	
The Building Owner is BST	Contact the Building Service Center for information about the location of asbestos	
The Building Owner is not BST and they have a current Asbestos Survey Inspection	Rely on the owners survey to make a decision for the project.	
The Building owner Does not have Asbestos survey information	Request information be determined	
The Building Owner Does not have Asbestos Survey information and cannot determine any additional information	Step 1 : If the material affected is (regardless of installation): ▪ wood concrete fiberglass (yellow, pink) plastic glass carpet If not, go to next step,	Assume no asbestos is present.
	Step 2: If the remaining material was installed ***before*** 1981 or if, you cannot Determine the age of the material Go to next step if installed after 1980	Assume material contains asbestos
	Step 3: If the remaining material was installed ***after*** 1981, Note: With each year after 1981, finding asbestos in building products is increasingly unlikely, however some products may still contain asbestos.	Consider the following to be more likely to contain asbestos: ▪ roofing ▪ roofing mastics ▪ hard transite paneling ▪ cement singles

Caution: For buildings constructed after 1980, asbestos may be present. A building owner is obligated to identify the presence, location, and quantity of any known or presumed ACMs in the structure and the components of the building.

3.6 Work Activity A – 2 Drilling holes through wall material.

3.6.1 Introduction

If alternative means of installation of service is available without disturbing materials that may or may not contain asbestos, these should be considered, discussed with the property owner, and utilized where possible.

Holes may need to be drilled in walls for various reasons, including running cable/wiring through walls, and mounting equipment on walls. Various types of wall construction materials may contain asbestos. These include:

- cement shingles or siding
- any wall material determined to contain asbestos

3.6.2 Procedure

Procedures for performing this work practice are:

Step	Action
1	Attempt to speak to the building owner or representative to determine if asbestos Is present in the material to be drilled or if the building was constructed prior to 1981. OS14A regulations require building owners or their representatives to inform vendors if they are aware of the presence of asbestos in the vendors work area. (This requirement does not apply to single unit residential buildings.) If this step cannot be completed refer to the flowchart in section 3.11. for additional procedures.
2	If the building is a BellSouth building, contact the Building Service Center (BSC), Or contact the Property Management Facility Manager to determine if asbestos is Present
3	If the material is determined to contain asbestos, or if there are other reasons to expect asbestos, i.e., building constructed prior to 1981, then the work practice below must be followed: a. Lay an adequate length of splice covering below the area being drilled to contain debris being extracted by the drill bit. Cover Splice B - 20" x 24" Sheet PID 400-134-946 Cover Splice B - 48" x 100' Roll PID 401-917-406 Thoroughly wet the sponge provided in the "Sponge Kit." Place the sponge against the wall/area to be drilled. Drill through the sponge. Sponge Kit PID 443-981-055 **Option 2** Using a spray bottle containing water, continuously spray water on the area being drilled to avoid allowing asbestos particles to become airborne. Sprayer/Bottle PID 626-960-256 b. When the drilling is complete, use a wet towel to wipe any debris from the area, and wipe off any **debris from the drill and drill** bit. Ensure that all settled dust is eliminated utilizing this wet wipe procedure. c. Fold splice covering to collect any dust, and secure with electrical/duct tape d. Collect wet sponge, towels, asbestos shavings/filings and place in a leak proof plastic baggie. Place baggies and splice covering in trascollection bag on vehicle and transport back to Work Center for disposal into regular trash. Larger pieces of asbestos material (greater than 1 square inch) should be collected and disposed according to BellSouth Procedures for Asbestos Containing Waste. (See Job Aid AWA-021 in Appendix E). e. Wash hands thoroughly after work is complete.

3.7 Work Activity A-3 Drilling or punching holes through vinyl asbestos floor tile.

3.7.1 Introduction

If alternative means of installation can be accomplished without disturbing materials that may or may not contain asbestos, these should be considered, discussed with the property owner, and utilized where possible.

Holes may need to be drilled or punched in floor tile for running cable/wiring through flooring. Vinyl floor tile and the mastic used to cement the tile to the floor may contain asbestos. There is no way to visually determine whether floor tile contains asbestos, but floor tile manufactured after 1980 can be assumed not to contain asbestos.

3.7. Procedure

Procedures for performing this work activity are:

Step	Action
1	Attempt to speak to the building owner or representative to determine if asbestos is present in the floor material to be drilled or if the building was constructed prior to 1981. OSHA regulations require building owners or their representatives to inform vendors if they are aware of the presence of asbestos in the vendors work area. (This requirement does not apply to single unit residential buildings.) If this step cannot be completed refer to the flowchart in section 3.11 for additional procedures.
2	If the building is a BellSouth building, contact the BSC or the Property and Services Management Facility Manager to determine whether the material contains asbestos. If the floor tile is known to be manufactured after 1980, then the material can be assumed not to contain asbestos and no special precautions are required.
3	If the material is determined to contain asbestos, or if the asbestos content of the material is unknown, then the work practices outlined below must be followed: a. **Option 1** Thoroughly wet the sponge provided in the "Sponge Kit and place the sponge on the floor/area to be drilled. Drill through the sponge. **Sponge Kit** **PID 443-981-055** Option 2 If the punch method is used to remove the asbestos floor tile, it may be necessary to wet the tile prior to punching, and then wet any remaining mastic (that may contain asbestos) prior to drilling. Using a spray bottle containing water, continuously spray water on the sponge and area being drilled. **Sprayer/Bottle** **PID 626-960-256** b. When the drilling is complete, use a wet towel to wipe any debris from the area, and wipe off any debris from the drill and drill bit. Ensure that all settled dust is eliminated utilizing this wet wipe procedure. c. Collect wet sponge, towels, asbestos shavings/filings and place in a leak proof plastic baggie. Place baggies in trash collection bag on vehicle and transport back to Work Center for disposal into regular trash. Larger pieces of asbestos material (greater than 1 square inch) should be collected and disposed according to BellSouth Procedures for Asbestos Contain ing Waste. (See Job Aid AWA-021 in Appendix E). d. Wash hands thoroughly after work is complete.

3.8 Work Activity A-6 Running cable/wiring above a suspended ceiling

(or otherwise accessing a suspended ceiling).

3.8.1 Introduction

If alternative means of installation can be accomplished without disturbing materials that may or may not contain asbestos, these should be considered, discussed with the property owner, and utilized where possible.

Technicians in Network Operations sometimes run telephone cable/wiring above suspended, or "drop," ceilings during installation activities, or may need to access suspended ceilings to make repairs. Access above the ceiling is typically obtained by lifting a ceiling tile and climbing above the suspended ceiling using a step ladder. The primary concern is that asbestos surfacing material may be present above the suspended ceiling.

3.8.2 Suspect Material

Asbestos ***fireproofing*** has been used in some buildings to protect the building's structural steel in the event of a fire. The fireproofing may have been sprayed-on or troweled-on. It may have been applied to the beams of the building, or it, may be found on both the beams and the decking of the building.

Asbestos ***acoustical*** material is a finished textured surface that contains asbestos. A suspended ceiling may have been installed during remodeling of the building. Asbestos surfacing material may have deteriorated over the years and asbestos dust and/or debris may have settled on top of the ceiling tiles. Any attempt to lift the ceiling tiles may disturb the dust. If surfacing material is present above the suspended ceiling, there is no way to rule out the possibility of this occurrence. Even if dust or debris has not fallen onto the ceiling tiles, running cables in the area could disturb the asbestos.

In addition to the fireproofing and acoustical material, ***ceiling tile*** should also be considered a suspect material. Although not widespread, certain manufacturers did utilize asbestos in their ceiling tile products.

3.8.3
Procedure

Procedures for performing this work activity are:

Step	Action
1	Attempt to speak to the building owner or representative to determine if asbestos-containing surfacing material is present above the suspended ceiling or in the suspended ceiling. itself, or if the building was constructed prior to 1981. OSHA regulations require building owners or their representatives to inform vendors if they are aware of the presence of asbestos in the vendors work area. (This requirement does not apply to single unit residential buildings.) If this step cannot be completed refer to the flowchart in section 3.11 for additional procedures.
2	If the building is a BellSouth building, contact the BSC or the Property and Services Management Facility Manager to determine whether the material contains asbestos. If the building owner has sampled the material and determined that it does not contain asbestos, then the material can be assumed not to contain asbestos and no special precautions are required.
3	If asbestos-containing material is present, then BellSouth personnel must not access the suspended ceiling. Alternative courses of action at the customer's expense include: ▪ Routing the cable/wiring through another area ▪ Customer places a conduit for pulling cable/wire or placement of cable/wire above the ceiling ▪ The customer hires a contractor who is qualified and equipped to place cable/wire in an asbestos-contaminated environment. ▪ If the asbestos is in the ceiling tile alone, ask the customer to lift the ceiling tile
4	If asbestos-containing surfacing material or ceiling tile is determined not to be present, but pipes insulated with ACM are present, then the following procedure should be followed: a. Request that the building owner or representative remove a ceiling tile in an area which is not beneath the pipes. b. Carefully approach the area to ensure that no insulated pipes or other suspect material is located in the immediate area. c. Look above the ceiling tile to determine if the cable/wire can be run in an area which is not adjacent to asbestos-containing pipes. If so, proceed with work. If not, seek an alternative approach as outlined in Step 3 above.
5	If work cannot be performed by avoiding asbestos, go to Work Activity A-8 "Dealing with Asbestos if Unavoidable"

3.9 Work Activity A-7 Working in attics, crawlspaces, and other areas where ACM is present.

3.9.1 Introduction

In certain situations, technicians may enter attics, crawlspaces, or other areas where certain types or asbestos are likely to be found. Asbestos fireproofing and thermal insulation on pipes and boilers are typically very friable (easily crumbled to dug t with hand pressure). Disturbance of these materials could create a significant amount of airborne asbestos dust.

3.9.2 Procedure

Procedures for performing this work activity are:

Step	Action
1	Attempt to speak to the building owner or representative to determine if asbestos-containing materials are present in the crawl space, attic or other areas, or if the building was constructed prior to 1981. OSHA regulations require building owners or their representatives to inform vendors if they are aware of the presence of asbestos in the vendors work area. (This requirement does not apply to single unit residential buildings.) If this step cannot be completed refer to the flowchart in section 3.11 for additional procedures.
2	If the building is a BellSouth building, contact the BSC or the Property and Services Management Facility Manager to determine whether the material contains asbestos. If the building owner has sampled the material and determined that it does not contain asbestos, then the material can be assumed not to contain asbestos and no special precautions are required.
3	Avoid entering confined areas where asbestos surfacing material or boiler and pipe insulation is present and where it is likely that working in the area will result in disturbance of any of the asbestos-containing material.
4	Avoid entering any area where asbestos-containing material has been damaged. Signs of asbestos damage include: ▪ Surfacing material that has become delaminated and is pulling away from the ceiling. ▪ Boiler and pipe insulation that has torn pipe wrapping. ▪ Any surfacing material or insulation that has been physically damaged. ▪ Any insulating material is present on the floor or other surfaces where it may have fallen.
5	Do not attach fasteners, drill through, or attach wire/cable to areas where asbestos surfacing material has been applied, or to insulated pipes.
6	If work cannot be performed by avoiding asbestos, g--) to Work Activity A-8 "Dealing with Asbestos if Unavoidable"

3.10 Work Activity A-8 Dealing with Asbestos if Unavoidable

3.10.1 Introduction

Often work activity cannot be avoided in areas that contain asbestos. These procedures will provide the steps to betaken when asbestos present and cannot be avoided.

Procedures for performing this work activity are included in the following step/action table, and illustrated in the flowchart on the next page.

3.10.2 Procedure

Step	Action
1	Attempt to speak to the building owner or representative to determine if asbestos-containing surfacing material is present in the work area. OSHA regulations require building owners or their representative to inform vendors if they are aware of the existence of asbestos in the vendor's work area. (This requirement does not apply to single unit residential buildings.)
2	If the building is a BellSouth building, contact the BSC or the Property and Services Management Facility Manager to determine whether the material contains asbestos. If the building owner has sampled the material and determined that it does not contain asbestos, then the material can be assumed not to contain asbestos and no special precautions are required.
3	Comply with activities to avoid asbestos through alternate routes
4	If alternate route is available, utilize proper work activity PPE and place, repair or remove wire. If alternate route is not available, go to the step 5.
5	Request that the customer provide conduit or alternate means of avoiding asbestos.
6	If customer will provide conduit, a SR/SO (Subscriber Request/Subscriber Other) Service order is completed. If not, go step 9
7	Customer will then advise of completion
8	BST can then proceed with work.
9	If customer will not provide conduit as requested, the technician should return job to WMC (Work Management Center), refer issue to the supervisor..
10	The supervisor will contact the customer for further discussion.

3.11 Flowchart for Work Activity – Dealing with Asbestos

Dealing With Asbestos If Unavoidable

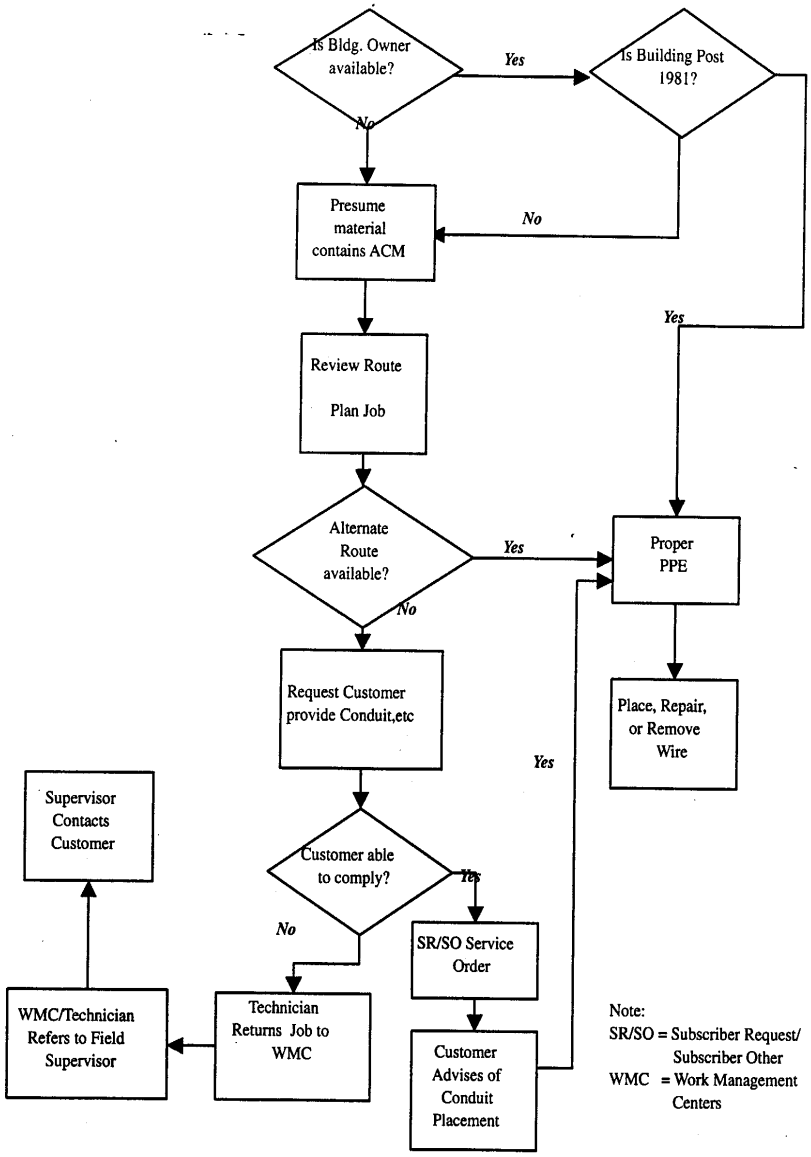

PRIVATE/PROPRIETARY
CONTAINS PRIVATE AND/OR PROPRIETARY INFORMATION.
MAY NOT BE USED OR DISCLOSED OUTSIDE THE BELLSOUTH COMPANIES
EXCEPT PURSUANT TO A WRITTEN AGREEMENT.

3.12 Work Activity A-9 Asbestos Communication

On occasion, it may be necessary to explain to a customer why work cannot be performed as planned due to the presence of asbestos. The "To our valued customers" notice (Form RF6879) will be used to communicate the following information.

- why the work cannot be performed
- who to call for more information

The technician should check item #13 the first page and write"there may be asbestos containing material". Then check item #6 on the second page and provide the supervisor's telephone number in the blank provided.

3.13 Asbestos Notification

BellSouth is required to notify employers of workers who may access cable contained in asbestos conduit in BellSouth plant, that asbestos is presumed to be present in all cementitious conduit material.

3.14 Asbestos Training

Appendix I summarizes this information. Training requirements are also cross-referenced into the work activity Job Aids

4. Standards for Asbestos Management in Fleet Maintenance

4.1 Scope

This section applies to all company fleet maintenance functions that are performed by either BST personnel or contracted services in BST facilities.

4.2 Operational Procedures

OSHA specifies additional requirements/restrictions for Brake and Clutch Repair activities.

Accordingly, Appendix C contains a Job Aid on the following operational activity:

Job Aid #AWA-020 **"Brake and Clutch Repair Activities"**

4.3 Asbestos Training

Appendix I summarizes this information. Training requirements are also cross-referenced into the work activity Job Aids.

TABLE OF CONTENTS

ATTACHMENT 6

Rights-of-Way (ROW), Conduits, Pole Attachments

C O N T E N T S

SECTION		PAGE
1	Definitions	1
2	Scope of Agreement	5
3	Requirements and Specifications	9
4	Additional Legal Requirements	17
5	Facilities and Licenses	18
6	Make-Ready Work	20
7	Application Forms and Fees	21
8	Processing of Applications	24
9	Issuance of Licenses	25
10	Construction of Licensee's Facilities	26
11	Use and Routine Maintenance of Licensee's Facilities	28
12	Modification and Replacement of Licensee's Facilities	29
13	Rearrangement of Facilities at Request of Another	29
14	Emergency Repairs and Pole Replacements	31
15	Inspection by BellSouth of Licensee's Facilities	32
16	Notice of Noncompliance	32
17	Unauthorized Occupancy or Utilization of BellSouth's Facilities	33
18	Removal of Licensee's Facilities	34
19	Fees, Charges, and Billing	35

EXHIBITS

Exhibit 1 BellSouth Records Maintenance Centers

Exhibit 2 BellSouth Administrative Forms and Notices

ATTACHMENT 6

RIGHTS OF WAY (ROW), CONDUITS, POLE ATTACHMENTS

This Attachment VI, together with the terms and conditions contained in Part A, Attachment 1 and Attachment 8, sets forth the terms and conditions under which BellSouth shall afford to MCIm access to BellSouth's poles, ducts, conduits and rights-of-way pursuant to the Act and FCC rules and regulations.

1. DEFINITIONS

Definitions in General. Except as the context otherwise requires, the terms defined in this Attachment shall, as used in this Attachment, have the meanings set forth in Sections 1.1 through 1.32, below.

1.1 Anchor. The term "anchor" refers to a device, structure, or assembly, which stabilizes a pole and holds it in place. An anchor assembly may consist of a rod and fixed object or plate, typically embedded in the ground, which is attached to a guy strand or guy wire, which, in turn, is attached to the pole. The term "anchor" includes only those anchors which are owned by BellSouth, as distinguished from anchors which are owned and controlled by other persons or entities, and does not include the guy strand, which connects the anchor to the pole.

1.2 Anchor/guy strand. The term "anchor/guy strand" refers to supporting wires, typically stranded together, or other devices attached to a pole and connecting that pole to an anchor or to another pole for the purpose of increasing pole stability. The term "anchor/guy strand" includes, but is not limited to, strands sometimes referred to as "anchor strands," "down guys," "guy strands," and "pole-to-pole guys."

1.3 Application. The process of requesting information related to records, pole and/or conduit availability, or make-ready requirements for BellSouth owned or controlled facilities. Each application is limited in size to a request for a maximum of (1) 100 consecutive poles or (2) 10 consecutive manhole sections or 5000 feet, whichever is greater. The application includes (but not limited to) request for records, records investigation and/or field investigation, and make-ready work.

1.4 Intentional left blank.

1.5 Assigned. The term "assigned", when used with respect to conduit or duct space or pole attachment space, refers to any space in such conduit or duct or on such pole that is occupied by a telecommunications service provider or a municipal or other governmental authority, or is assigned pursuant to Section 4.8 herein. To ensure the judicious use of poles and conduits, space "assigned" to a telecommunications service provider must be physically occupied by the service provider, be it BellSouth or a new entrant, within twelve (12) months of the space being "assigned".

1.6 Available. The term "available", when used with respect to conduit or duct space or

pole attachment space, refers to any usable space in such conduit or duct or on such pole not assigned to a specific provider at the applicable time.

1.7 Intentionally left blank.

1.8 Conduit occupancy. The terms "conduit occupancy" and "occupancy" refer to the presence of wire, cable, optical conductors, or other facilities within any portion of BellSouth's conduit system.

1.9 Conduit system. The term "conduit system" refers to any combination of ducts, conduits, manholes, and handholes, and other rights-of-way joined to form an integrated whole. In this Attachment, the term refers to conduit systems owned or controlled by BellSouth.

1.10 Cost. The term "cost" as used herein refers to charges made by BellSouth to MCIm for specific work performed, and shall be (a) the actual charges made by subcontractors to BellSouth for work and/or, (b) if the work was performed by BellSouth employees, the rates set forth in Attachment I of this Agreement shall apply for such work, or (c) if the work is done by approved contractors hired by MCIm, the actual charges made by such contractors to MCIm.

1.11 Duct. The term "duct" refers to a single enclosed tube, pipe, or channel for enclosing and carrying cables, wires, and other facilities. As used in this Attachment, the term "duct" includes "inner-ducts" created by subdividing a duct into smaller channels.

1.12 Facilities. The terms "facility" and "facilities" refer to any property or equipment utilized in the provision of telecommunication services.

1.13 Intentionally left blank.

1.14 Intentionally left blank.

1.15 Inner-Duct. The term "inner-duct" refers to a pathway created by subdividing a duct into smaller channels.

1.16 Joint User. The term "joint user" refers to a utility which has entered into an agreement with BellSouth providing reciprocal rights of attachment of facilities owned by each party to the poles, ducts, conduits and rights-of-way owned by the other party.

1.17 Lashing. The term "lashing" refers to the attachment of a licensee's sheath or inner-duct to a supporting strand.

1.18 License. The term "license" refers to any license issued pursuant to this Agreement and may, if the context requires, refer to conduit occupancy or pole attachment licenses issued by BellSouth prior to the date of this Agreement.

1.19 Licensee. The term "licensee" refers to MCIm, where MCIm has entered into an agreement or arrangement with BellSouth permitting MCIm to place its facilities in BellSouth's conduit system or attach its facilities to BellSouth's poles or anchors. Licensee and MCIm may be used interchangeably throughout this Attachment.

1.20 Make-Ready Work. The term "make-ready work" refers to all work performed or to be performed to prepare BellSouth's conduit systems, poles or anchors and related

facilities for the requested occupancy or attachment of MCIm's facilities. "Make-Ready work" includes, but is not limited to, clearing obstructions (e.g., by "rodding" ducts to ensure clear passage), the rearrangement, transfer, replacement, and removal of existing facilities on a pole or in a conduit system where such work is required solely to accommodate MCIm's facilities and not to meet BellSouth's business needs or convenience. "Make-Ready work" may require "dig-ups" of existing facilities and may include the repair, enlargement or modification of BellSouth's facilities (including, but not limited to, conduits, ducts, handholes and manholes) or the performance of other work required to make a pole, anchor, conduit or duct usable for the initial placement of MCIm's facilities.

1.21 Manhole/Handhole. The term "manhole" refers to an enclosure, usually below ground level and entered through a hole on the surface covered with a cast iron or concrete manhole cover, which personnel may enter and use for the purpose of installing, operating, and maintaining facilities in a conduit. The term "handhole" refers to a similar enclosure which is too small for personnel to enter.

1.22 Occupancy. The term "occupancy" shall refer to the physical presence of telecommunication facilities in a duct, on a pole, or within a right-of-way.

1.23 Person acting on MCIm's behalf. The terms "person acting on MCIm's behalf," "personnel performing work on MCIm's behalf," and similar terms include both natural persons and firms and ventures of every type, including, but not limited to, corporations, partnerships, limited liability companies, sole proprietorships, and joint ventures. The terms "person acting on MCIm's behalf," "personnel performing work on MCIm's behalf," and similar terms specifically include, but are not limited to, MCIm, its officers, directors, employees, agents, representatives, attorneys, contractors, subcontractors, and other persons or entities performing services at the request of or as directed by MCIm and their respective officers, directors, employees, agents, and representatives.

1.24 Person acting on BellSouth's behalf. The terms "person acting on BellSouth's behalf," "personnel performing work on BellSouth's behalf," and similar terms include both natural persons and firms and ventures of every type, including, but not limited to, corporations, partnerships, limited liability companies, sole proprietorships, and joint ventures. The terms "person acting on BellSouth's behalf," "personnel performing work on BellSouth's behalf," and similar terms specifically include, but are not limited to, BellSouth, its officers, directors, employees, agents, representatives, attorneys, contractors, subcontractors, and other persons or entities performing services at the request or on behalf of BellSouth and their respective officers, directors, employees, agents, and representatives.

1.25 Pole. The term "pole" refers to both utility poles and anchors but only to those utility poles and anchors owned or controlled by BellSouth, and does not include utility poles or anchors with respect to which BellSouth has no legal authority to permit attachments by other persons or entities.

1.26 Intentionally left blank.

1.27 Prelicense survey. The term "prelicense survey" refers to all work and activities

performed or to be performed to determine whether there is adequate capacity on a pole or in a conduit or conduit system (including manholes and handholes) to accommodate MCIm's facilities and to determine what make-ready work, if any, is required to prepare the pole, conduit or conduit system to accommodate MCIm's facilities.

1.28 Right-of-Way (ROW). The term “right-of-way” refers to the right to use the land or other property of BellSouth to place poles, conduits, cables, other structures and equipment, or to provide passage to access such structures and equipment. A Right-of-Way may run under, on, above, across, along or through public or private property or enter multi-unit buildings (including air space above public or private property) and may include the right to use BellSouth-owned or controlled building entrance facilities, building entrance links, equipment rooms, telephone closets, and/or building risers.

1.29 Sheath. The term “sheath” refers to a single outer covering containing communications wires, fibers, or other communications media.

1.30 Spare Capacity. The term "spare capacity" refers to any pole attachment space, conduit, duct or inner-duct not currently assigned or subject to a pending application for attachment/occupancy. Spare capacity does not include an inner-duct (not to exceed one inner-duct per party) reserved by BellSouth, MCIm, or a third party for maintenance, repair, or emergency restoration.

1.31 State. When capitalized, the term "State" (as used in terms such as "this State") refers to the State, for which this Agreement applies.

1.32 Third Party. The terms "third party" and "third parties" refer to persons and entities other than MCIm and BellSouth. Use of the term "third party" does not signify that any such person or entity is a party to this Agreement or has any contractual rights hereunder.

2. REQUIREMENTS / SCOPE OF AGREEMENT

2.1 Scope of Attachment. BellSouth shall provide MCIm with equal and nondiscriminatory access to pole space, conduits, ducts, and rights-of-way on terms and conditions equal to those provided by BellSouth to itself or to any other telecommunications service provider. Further, BellSouth shall not withhold or delay assignment of such facilities to MCIm because of the potential or forecasted needs of itself, its Affiliates or other parties.

2.2 Attachments and Occupancies Authorized by this Attachment. BellSouth shall issue one or more licenses to MCIm authorizing MCIm to attach facilities to BellSouth's owned or controlled poles and to place facilities within BellSouth's owned or controlled conduits, ducts or rights-of-way under the terms and conditions set forth in this Attachment, the Act and FCC rules and regulations.

2.2.1 Unless otherwise provided herein, authority to attach facilities to BellSouth's owned or controlled poles or to place facilities within BellSouth's owned or controlled conduits, ducts or rights-of-way shall be granted only in individual licenses granted under this Attachment and the placement or use of such facilities shall be determined in

accordance with such licenses and procedures established in this Attachment.

2.2.2 MCIm agrees that its attachment of facilities to BellSouth's owned or controlled poles or occupancy of BellSouth's owned or controlled conduits, ducts or rights-of-way shall take place pursuant to the licensing procedures set forth herein, and BellSouth agrees that it shall not unreasonably withhold or delay issuance of such licenses.

2.2.3 MCIm may not sublease or otherwise authorize any Third Party to use any part of the BellSouth Facilities licensed to MCIm under this Attachment, except that MCIm may lease its own Facilities to Third Parties, or allow affiliates to overlash cables to MCIm cables. Notwithstanding the above, upon notice to BellSouth, MCIm may permit Third Parties who have an agreement with BellSouth to overlash to existing MCIm attachments in accordance with the terms and conditions of such Third Party's agreement with BellSouth, and MCIm may lease dark fiber to a Third Party

2.3 Licenses. Subject to the terms and conditions set forth in this Attachment, BellSouth shall issue to MCIm one or more licenses authorizing MCIm to place or attach facilities in or to specified poles, conduits, ducts or rights-of-way owned or controlled by BellSouth located within this State on a first come, first served basis. BellSouth may deny a license application if BellSouth determines that the pole, conduit or duct space specifically requested by MCIm is necessary to meet BellSouth's present needs, or is licensed by BellSouth to another licensee, or is otherwise unavailable based on engineering concerns. BellSouth shall provide written notice to MCIm within a reasonable time, not to exceed 45 days, specifying in detail the reasons for denying MCIm's request. BellSouth shall have the right to designate the particular duct(s) to be occupied, the location and manner in which MCIm's facilities will enter and exit BellSouth's conduit system and the specific location and manner of installation for any associated equipment which is permitted by BellSouth to occupy the conduit system. Assignment of space on poles, in conduits or ducts and within rights-of-way will be granted by BellSouth on an equal basis to BellSouth, MCIm and other telecommunication service providers

2.4 Access and Use of Rights-of-Way. BellSouth acknowledges that it is required by the Act and FCC rules and regulations to afford MCIm access to and use of all associated rights-of-way to any sites where BellSouth's owned or controlled poles, manholes, conduits, ducts or other parts of BellSouth's owned or controlled conduit systems are located and any other BellSouth owned or controlled rights-of-way.

2.4.1 BellSouth shall provide MCIm with access to and use of such rights-of-way to the same extent and for the same purposes that BellSouth may access or use such rights-of-way, including, but not limited to, access for ingress, egress or other access and to construct, utilize, maintain, modify, and remove facilities for which pole attachment, conduit occupancy, or right-of-way use licenses have been issued, provided that any agreement with a third party under which BellSouth holds such rights expressly or impliedly grants BellSouth the right to provide such rights to others.

2.4.2 Where BellSouth notifies MCIm that a BellSouth agreement with a third party does not expressly or impliedly grant BellSouth the ability to provide such access and use rights to others, then, upon MCIm's request, BellSouth will use its best efforts to

obtain the owner's consent and to otherwise secure such rights for MCIm. MCIm agrees to reimburse BellSouth for the reasonable and demonstrable costs incurred by BellSouth in obtaining such rights for MCIm.

2.4.3 In cases where a third party agreement does not grant BellSouth the right to provide access and use rights to others as contemplated in this Section 2 and BellSouth, despite its best efforts, is unable to secure such access and use rights for MCIm in accordance with Section 2.4.2 herein, or, in the case where MCIm elects not to invoke its rights under Sections 2.4.1 or 2.4.2 herein, MCIm shall be responsible for obtaining such permission to access and use such rights-of-way. BellSouth shall cooperate with MCIm in obtaining such permission and shall not prevent or delay any third party assignment of rights-of-way to MCIm.

2.4.4 Where BellSouth has any ownership or rights-of-way to buildings or building complexes, or within buildings or building complexes, BellSouth shall offer to MCIm through a license or other agreement:

2.4.4.1 The right to use any available space owned or controlled by BellSouth in the building or building complex to install MCIm equipment and facilities; and

2.4.4.2 Ingress and egress to such space.

Except to the extent required to meet the requirements of the Act and FCC rules and regulations, neither this Attachment nor any license granted hereunder shall constitute a conveyance or assignment of any of either Party's rights to use any public or private rights-of-way, and nothing contained in this Attachment or in any license granted hereunder shall be construed as conferring on one Party any right to interfere with the other Party's access to any such public or private rights-of-way.

2.5 No Effect on BellSouth's Right to Convey Property. Nothing contained in this Attachment or in any license issued hereunder shall in any way affect the right of BellSouth to convey to any other person or entity any interest in real or personal property, including any poles, conduit or ducts to or in which MCIm has attached or placed facilities pursuant to licenses issued under this Section provided however that if BellSouth voluntarily conveys for consideration real property to which MCIm possess a license and the conveyance is not subject to that license or the purchaser will not honor the license, then BellSouth shall reimburse MCIm for all costs associated with removal and reinstallation of MCIm's equipment. In addition, BellSouth shall not enter into any agreement under such a conveyance concerning access or use of property so conveyed, unless MCIm receives the same terms as BellSouth receives.

2.6 No Effect on BellSouth's Rights to Manage its Own Facilities. This Attachment shall not be construed as limiting or interfering with BellSouth's rights set forth below, except to the extent expressly provided by the provisions of this Attachment or licenses issued hereunder or under the Act or other applicable laws, rules or regulations:

2.6.1 To locate, relocate, move, replace, modify, maintain, and operate BellSouth's own facilities within BellSouth's conduits, ducts or rights-of way or any of BellSouth's

facilities attached to BellSouth's poles at any time and in any reasonable manner which BellSouth deems appropriate to serve its customers, avail itself of new business opportunities, or otherwise meet its business needs; or

2.6.2 To enter into new agreements or arrangements with other persons or entities permitting them to attach or place their facilities to or in BellSouth's poles, conduits or ducts; provided, however, that such relocations, moves, replacements, modifications, maintenance and operations or new agreements or arrangements shall not substantially interfere with MCIm's pole attachment, conduit occupancy or right-of-way use or rights provided by licenses issued pursuant to this Attachment.

2.7 No Effect on MCIm's Rights to Manage its Own Facilities. This Attachment shall not be construed as limiting or interfering with MCIm's rights set forth below, except to the extent expressly provided by the provisions of this Attachment or licenses issued hereunder or under the Act or other applicable laws, rules or regulations:

2.7.1 To locate, relocate, move, replace, modify, maintain, and operate its own facilities within BellSouth's conduits, ducts or rights-of-way or its facilities attached to BellSouth's poles at any time and in any reasonable manner which MCIm deems appropriate to serve its customers, avail itself of new business opportunities, or otherwise meet its business needs; or

2.7.2 To enter into new agreements or arrangements with other persons or entities permitting MCIm to attach or place its facilities to or in such other persons' or entities' poles, conduits or ducts, or rights-of-way; provided, however, that such relocations, moves, replacements, modifications, maintenance and operations or new agreements or arrangements shall not conflict with MCIm's obligations under this Attachment.

2.8 No Right to Interfere with Facilities of Others. The provisions of this Attachment or any license issued hereunder shall not be construed as authorizing either Party to this Attachment to rearrange or interfere in any way with any of the other Party's facilities, with the facilities of other persons or entities, or with the use of or access to such facilities by such other Party or such other persons or entities, except to the extent expressly provided by the provisions of this Attachment or any license issued hereunder or under the Act or other applicable laws, rules or regulations.

2.8.1 MCIm acknowledges that the facilities of persons or entities other than BellSouth and MCIm may be attached to or occupy BellSouth's poles, conduits, ducts and rights-of-way.

2.8.2 BellSouth shall not attach, or give permission to any third parties to attach facilities to, existing MCIm facilities without MCIm's prior written consent. If BellSouth becomes aware of any such unauthorized attachment to MCIm facilities, BellSouth shall use its best efforts to rectify the situation immediately.

2.8.3 With respect to facilities occupied by MCIm or the subject of an application for attachment by MCIm, BellSouth will give to MCIm at least sixty (60) days' written notice for conduit extensions or reinforcements, at least sixty (60) days' written notice for pole line extensions, at least sixty (60) days' written notice for pole replacements, and at least sixty (60) days' written notice of BellSouth's intention to construct,

reconstruct, expand or place such facilities or of BellSouth's intention not to maintain or use any existing facility. Where BellSouth elects to abandon or remove BellSouth facilities, the facilities will be offered to existing occupants on a first-in, first-right to maintain basis. The party first electing to exercise this option will be required to execute the appropriate agreement with BellSouth to transfer (purchase agreement) ownership from BellSouth to new party, subject to then-existing licenses pertaining to such facilities. If no party elects to maintain such facilities, all parties will be required to move their existing facilities within ninety (90) days. If an emergency or provision of an applicable joint use agreement requires BellSouth to construct, reconstruct, expand or replace poles, conduits or ducts occupied by MCIm or the subject of an application for attachment by MCIm, BellSouth will notify MCIm as soon as reasonably practicable of such proposed construction, reconstruction, expansion or replacement to enable MCIm, if it so desires, to request that a pole, conduit or duct of greater height or capacity be utilized to accommodate an anticipated facility need of MCIm.

2.8.3.1 Whenever BellSouth intends to modify or alter any poles, ducts, conduits or rights-of-way which contain MCIm's facilities, BellSouth shall provide at least sixty (60) days' advance written notification to MCIm of such action so that MCIm may have a reasonable opportunity to add to or modify MCIm's facilities. If MCIm adds to or modifies MCIm's facilities according to this Section, MCIm shall bear a proportionate share of the costs incurred by BellSouth in making such facilities accessible.

2.8.4 Retired Cable. At MCI's expense, BellSouth shall remove any retired cable from conduit systems or pole systems to allow for the efficient use of conduit space or pole space within a reasonable period of time. BellSouth retains salvage rights on any cable removed. In order to safeguard its structures and facilities, BellSouth reserves the right to remove retired cables and is under no obligation to allow MCIm the right to remove such cables. Based on sound engineering judgement, there may be situations where it would neither be feasible nor practical to remove retired cables.

3. REQUIREMENTS AND SPECIFICATIONS

3.1 Published Standards Incorporated in this Attachment by Reference. MCIm agrees that its facilities shall be placed, constructed, maintained, repaired, and removed in accordance with current (as of the date when such work is performed) editions of the following publications**,** each of which is incorporated by reference as part of this Attachment:

3.1.1 The Blue Book Manual of Construction Procedures, Special Report SR-TAP-001421, published by Bell Communications Research, Inc. ("Bellcore"), and sometimes referred to as the "Blue Book";

3.1.2 The National Electrical Code ("NEC"); and

3.1.3 The National Electrical Safety Code ("NESC").

3.2 Changes in Published Standards. MCIm agrees to rearrange its facilities in accordance with changes in the standards published in the publications specified in Section 3 of

this Attachment if required by law to do so or upon the mutual agreement of the Parties.

3.3 Additional Electrical Design Specifications. MCIm agrees that, in addition to specifications and requirements referred to in Section 3 above, MCIm's facilities placed in BellSouth's conduit system shall meet all of the following electrical design specifications:

3.3.1 No facility shall be placed in BellSouth's conduit system in violation of FCC rules and regulations.

3.3.2 MCIm's facilities placed in BellSouth's conduit system shall not be designed to use the earth as the sole conductor for any part of MCIm's circuits.

3.3.3 MCIm's facilities carrying more than 50 volts AC (rms) to ground or 135 volts DC to ground shall be enclosed in an effectively grounded sheath or shield.

3.3.4 No coaxial cable of MCIm shall occupy a conduit system containing BellSouth's cable unless such cable of MCIm meets the voltage limitations of Article 820 of the National Electrical Code.

3.3.5 MCIm's coaxial cable may carry continuous DC voltages up to 1800 volts to ground where the conductor current will not exceed one-half amperes and where such cable has two (2) separate grounded metal sheaths or shields and a suitable insulating jacket over the outer sheath or shield. The power supply shall be so designed and maintained that the total current carried over the outer sheath shall not exceed 200 micro amperes under normal conditions. Conditions which would increase the current over this level shall be cleared promptly.

3.3.6 Neither Party shall circumvent the other Party's corrosion mitigation measures. Each Party's new facilities shall be compatible with the other Party's facilities so as not to damage any facilities of the other Party by corrosion or other chemical reaction.

3.4 Additional Physical Design Specifications. MCIm's facilities placed in BellSouth's conduit system must meet all of the following physical design specifications:

3.4.1 Cables bound or wrapped with cloth or having any kind of fibrous coverings or impregnated with an adhesive material shall not be placed in BellSouth's conduit or ducts.

3.4.2 The integrity of BellSouth's conduit system and overall safety of BellSouth's personnel and other personnel working in BellSouth's conduit system requires that "dielectric cable" be required when MCIm's cable facility utilizes an alternative duct or route that is shared in the same trench by any current carrying facility of a power utility.

3.4.3 New construction splices in MCIm's fiber optic and twisted pair cables shall be located in manholes, pull boxes or handholes.

3.5 Additional Specifications Applicable to Connections. The following specifications apply to connections of MCIm's conduit to BellSouth's conduit system:

3.5.1 MCIm will be permitted to connect its conduit or duct only at the point of a BellSouth manhole. No attachment will be made by entering or breaking into conduit between

manholes. All necessary work to install MCIm facilities will be performed by MCIm or its contractor at MCIm's expense. In no event shall MCIm or its contractor "core bore" or make any other modification to BellSouth manhole(s) without the prior written approval of BellSouth, which approval will not be unreasonably delayed or withheld.

3.5.2 BellSouth may monitor, at MCIm's expense, the entrance and exit of MCIm's facilities into BellSouth's manholes and the placement of MCIm's facilities in BellSouth's manholes.

3.5.3 If MCIm constructs or utilizes a duct connected to BellSouth's manhole, the duct and all connections between that duct and BellSouth's manhole shall be sealed, to the extent practicable, to prevent the entry of gases or liquids into BellSouth's conduit system. If MCIm's duct enters a building, it shall also be sealed where it enters the building and at all other locations necessary to prevent the entry of gases and liquids from the building into BellSouth's conduit system.

3.6 Requirements Relating to Personnel, Equipment, Material, and Construction Procedures Generally. Duct clearing, rodding or modifications required to grant MCIm access to BellSouth's conduit systems may be performed by BellSouth at MCIm's expense at charges which represent BellSouth's actual costs. Alternatively, at MCIm's option, such work may be performed by MCIm or a contractor provided that the entity performing the work demonstrates compliance with BellSouth certification requirements, which certification requirements shall be consistent with FCC rules and regulations. The Parties acknowledge that MCIm, its contractors, and other persons acting on MCIm's behalf will perform work for MCIm (e.g., splicing MCIm's facilities) within BellSouth's conduit system. MCIm represents and warrants that neither MCIm nor any person acting on MCIm's behalf shall permit any person to climb or work on or in any of BellSouth's poles or to enter BellSouth's manholes or work within BellSouth's conduit system unless such person has the training, skill, and experience required to recognize potentially dangerous conditions relating to pole or the conduit systems and to perform the work safely.

3.6.1 MCIm's facilities within BellSouth's conduit system shall be constructed, placed, rearranged, modified, and removed upon receipt of a license specified in Section 5 herein. However, no such license will be required for the inspection, maintenance, repair or non-physical modifications of MCIm's facilities.

3.6.2 "Rodding" or clearing of ducts in BellSouth's conduit system shall be done only when specific authorization for such work has been obtained in advance from BellSouth, which authorization shall not be unreasonably delayed or withheld. The Parties agree that such rodding or clearing shall be performed according to existing industry standards and practices. MCIm may perform such work itself or may contract with BellSouth for performance of such work or, at MCIm's option, with a contractor provided that the entity performing the work demonstrates compliance with BellSouth certification requirements which certification requirements shall be consistent with FCC rules and regulations.

3.6.3 Personnel performing work on BellSouth's or MCIm's behalf in BellSouth's conduit

system shall not climb on, step on, or otherwise disturb the other Party's or any third party's cables, air pipes, equipment, or other facilities located in any manhole or other part of BellSouth's conduit system.

3.6.4 Personnel performing work on BellSouth's or MCIm's behalf within BellSouth's conduit system, including any manhole, shall, upon completing their work, make reasonable efforts to remove all tools, unused materials, wire clippings, cable sheathing and other materials brought by them to the work site.

3.6.5 All of MCIm's facilities shall be firmly secured and supported in accordance with Bellcore and industry standards.

3.6.6 Identification of Facilities in Conduit/Manholes. MCIm's facilities shall be plainly identified with MCIm's name in each manhole with a firmly affixed permanent tag that meets standards set by BellSouth for its own facilities.

3.6.6.1 Identification of Pole Attachments. MCIm's facilities attached to BellSouth poles shall be plainly identified with MCIm's name firmly affixed at each pole by a permanent tag that meets industry standards.

3.6.7 Manhole pumping and purging required in order to allow MCIm's work operations to proceed shall be performed by MCIm or its contractor in compliance with the requirements of Exhibit B to this Attachment, and with all regulations and standards established by the United States Environmental Protection Agency and by any applicable state or local environmental regulators. Exhibit B will be changed as required by changes in Applicable Law, or by mutual agreement of the Parties. Either Party desiring to make other changes to Exhibit B may invoke the dispute resolution procedures of Part A of this Agreement if the Parties are not able to agree on such changes. BellSouth may not use its own practices as a method of applying rules to MCIm which are more onerous than those which it applies to itself. BellSouth remains bound by its obligations as an incumbent LEC under applicable federal and State law.

3.6.8 Planks or other types of platforms shall not be installed using cables, pipes or other equipment as a means of support. Platforms shall be supported only by cable racks.

3.6.9 Any leak detection liquid or device used by MCIm or personnel performing work on MCIm's facilities within BellSouth's conduit system shall be of a type approved by BellSouth or Bellcore.

3.6.10 When MCIm or personnel performing work on MCIm's behalf are working within or in the vicinity of any part of BellSouth's poles or conduit system which is located within, under, over, or adjacent to streets, highways, alleys or other traveled rights-of-way, MCIm and all personnel performing work on MCIm's behalf shall follow procedures which MCIm deems appropriate for the protection of persons and property. MCIm shall be responsible, at all times, for determining and implementing the specific steps required to protect persons and property at the site. MCIm will provide all traffic control and warning devices required to protect pedestrian and vehicular traffic, workers and property from danger. MCIm has sole responsibility for the safety of all personnel performing work on MCIm's behalf, for the safety of bystanders, and for insuring that all operations conform to current OSHA regulations and all other governmental rules, ordinances or statutes. BellSouth reserves the right

to suspend MCIm's activities on, in or in the immediate vicinity of BellSouth's poles or conduit system if, in BellSouth's reasonable judgment, any hazardous condition arises due to the activity (including both acts and omissions) of MCIm or any personnel performing work on MCIm's behalf, which suspension shall cease when the condition has been rectified.

3.6.11 Except for protective screens, no temporary cover shall be placed by MCIm or personnel performing work on MCIm's behalf over an open manhole unless it is at least four feet (4') above the surface level of the manhole opening.

3.6.12 Smoking or the use of any open flame is prohibited in BellSouth's manholes, in any other portion of BellSouth's conduit system, or within ten feet (10') of any open manhole entrance; provided that this provision will not prohibit the use of spark producing tools such as electric drills, fusion splicers, etc.

3.6.13 Artificial lighting, when required, will be provided by MCIm. Only explosion-proof lighting fixtures shall be used.

3.6.14 Neither MCIm nor personnel performing work on MCIm's behalf shall allow any combustible gas, vapor, liquid, or material to accumulate in BellSouth's conduit system, including any manhole, during work operations performed within or in the vicinity of BellSouth's conduit system.

3.6.15 MCIm will abide by any laws, regulations or ordinances regarding the use of spark producing tools, equipment or devices in BellSouth's manholes, in any other portions of BellSouth's conduit system, or within ten feet (10') of any open manhole opening. This includes, but is not limited to, such tools as electric drills and hammers, meggers, breakdown sets, and induction sets.

3.7 Opening of Manholes. The following requirements apply to the opening of BellSouth's manholes and the authority of BellSouth personnel present when work on MCIm's behalf is being performed within or in the vicinity of BellSouth's conduit system.

3.7.1 BellSouth's manholes shall be opened only as permitted by BellSouth's authorized employees or agents, which permission shall not be unreasonably denied or delayed.

3.7.2 MCIm shall notify BellSouth forty-eight (48) hours in advance of any routine work operation requiring entry into any of BellSouth’s manholes.

3.7.3 MCIm shall be responsible for obtaining any necessary authorization from appropriate authorities to open manholes for conduit work operations therein.

3.7.4 BellSouth's authorized employee or agent shall not direct or control the conduct of MCIm's work at the work site. The presence of BellSouth's authorized employee or agent at the work site shall not relieve MCIm or personnel performing work on MCIm's behalf of their responsibility to conduct all work operations within BellSouth's conduit system in a safe and workmanlike manner.

3.7.5 Although BellSouth's authorized employee or agent shall not direct or control the conduct of MCIm's work at the work site, BellSouth's employee or agent shall have the authority to suspend MCIm's work operations within BellSouth's conduit system if, in the reasonable discretion of such BellSouth employee or agent, it appears that any

hazardous conditions arise or any unsafe practices are being followed by MCIm or personnel performing work on MCIm's behalf.

3.8 OSHA Compliance: Notice to BellSouth of Unsafe Conditions. MCIm agrees that:

3.8.1 Its facilities shall be constructed, placed, maintained, repaired, and removed in accordance with the Occupational Safety and Health Act ("OSHA") and all rules and regulations promulgated thereunder;

3.8.2 All persons acting on MCIm's behalf, including, but not limited to, MCIm's employees, agents, contractors, and subcontractors shall, when working on or within BellSouth's poles or conduit system, comply with OSHA and all rules and regulations thereunder;

3.8.3 MCIm shall establish appropriate procedures and controls to assure compliance with all requirements of this Attachment; and

3.8.4 MCIm, and any person acting on MCIm's behalf, may report unsafe conditions on, in or in the vicinity of BellSouth's poles or conduit system to BellSouth.

3.9 Compliance with Environmental Laws and Regulations. MCIm acknowledges that, from time to time, environmental contaminants may enter BellSouth's conduit system and accumulate in manholes or other conduit facilities and that certain conduits (Transite) are constructed with asbestos-containing materials. If BellSouth has knowledge of the presence of such contaminants in a conduit for which MCIm has applied for or holds a license, BellSouth will promptly notify MCIm of such fact. In addition, upon request by MCIm, BellSouth shall provide MCIm with information pertaining to any environmental inspections it has performed on rights-of-way, conduits, and pole attachments for which MCIm has applied for or holds a license. Notwithstanding any of BellSouth's notification requirements in this Attachment, MCIm acknowledges that some of BellSouth's conduit may be fabricated from asbestos-containing materials. Such conduit is generally marked with a designation of "C Fiber Cement Conduit," "Transite," or "Johns-Manville." Unless sampling or manufacturer's certification proves otherwise, MCIm will presume that all conduit not fabricated of plastic, tile, or wood is asbestos-containing and will handle it pursuant to all applicable regulations relating to worker safety and protection of the environment. BellSouth makes no representations to MCIm or personnel performing work on MCIm's behalf that BellSouth's conduit system or any specific portions thereof will be free from environmental contaminants at any particular time. The acknowledgments and representations set forth in the two preceding sentences are not intended to relieve BellSouth of any liability which it would otherwise have under applicable law for the presence of environmental contaminants in its conduit facilities. MCIm agrees to comply with the following provisions relating to compliance with environmental laws and regulations:

3.9.1 MCIm's facilities shall be constructed, placed, maintained, repaired, and removed in accordance with all applicable federal, State, and local environmental statutes, ordinances, rules, regulations, and other laws, including, but not limited to, the Resource Conservation and Recovery Act (42 U.S.C. §§9601 et seq.), the Toxic Substance Control Act (15 U.S.C. §§2601-2629), the Clean Water Act (33 U.S.C. §§1251 et seq.), and the Safe Drinking Water Act (42 U.S.C. §§300f-300j).

3.9.2 All persons acting on MCIm's behalf, including, but not limited to, MCIm's employees, agents, contractors, and subcontractors, shall, when working on, within or in the vicinity of BellSouth's poles or conduit system, comply with all applicable federal, State, and local environmental laws, including, but not limited to, all environmental statutes, ordinances, rules, and regulations.

3.9.3 MCIm shall establish appropriate procedures and controls to assure compliance with all requirements of this Section 3.9.

3.9.4 MCIm and all personnel performing work on MCIm's behalf shall comply with such standards and practices as BellSouth and MCIm may from time to time mutually agree to adopt to comply with environmental laws and regulations. Pursuant to Exhibit B, neither MCIm nor BellSouth nor personnel performing work on either Party's behalf shall discharge water or any other substance from any BellSouth manhole or other conduit facility onto public or private property, including any storm water drainage system, without first testing such water or substance for contaminants in accordance with mutually agreed standards and practices and determining that such discharge would not violate any environmental law, create any environmental risk or hazard, or damage the property of any person. Proper handling and disposal of any waste material from a BellSouth manhole by MCIm or its contractor shall be the responsibility of MCIm. No such waste material shall be deposited on BellSouth premises for storage or disposal. BellSouth may not use its practices as a method of applying rules to MCIm which are more onerous than those which it applies to itself. BellSouth remains bound by its obligations as an incumbent LEC under applicable federal and state law.

3.10 Compliance with Other Governmental Requirements. MCIm agrees that its facilities attached to BellSouth's facilities shall be constructed, placed, maintained, and removed in accordance with the ordinances, rules, and regulations of any governing body having jurisdiction over the subject matter. MCIm shall comply with all applicable statutes, ordinances, rules, regulations and other laws requiring the marking and lighting of aerial wires, cables and other structures to ensure that such wires, cables and structures are not a hazard to aeronautical navigation. MCIm shall establish appropriate procedures and controls to assure such compliance.

3.11 Differences in Standards or Specifications. To the extent that there may be differences in any applicable standards or specifications referred to in this Section 3, the most stringent standard or specification shall apply.

3.12 MCIm Solely Responsible for the Condition of Its Facilities. MCIm shall be responsible at all times for the condition of its facilities and its compliance with the requirements, specifications, rules, regulations, ordinances, and laws specified in this Section 3. In this regard, BellSouth shall have no duty to MCIm to inspect or monitor the condition of MCIm's facilities (including, but not limited to, splices and other facilities connections) located within BellSouth's conduit and ducts or any attachment of MCIm's facilities to BellSouth's poles, anchors, anchor/guy strands or other pole facilities. BellSouth may, however, conduct such inspections and audits of its poles and conduit system as BellSouth determines reasonable or necessary. Such inspection and audits shall be conducted at BellSouth’s expense with the exception of (a) follow-

up inspection to confirm remedial action after an observed MCIm violation of the requirements of this Attachment; and (b) inspection of MCIm facilities in compliance with a specific mandate of appropriate governmental authority for which inspections the cost shall be borne by MCIm. Either Party may audit the other Party's compliance with the terms of this Section 3.12. Observed safety hazards or imminent facility failure conditions of any party shall be reported to the affected party where such party can be readily identified.

3.13 Efficient Use of Conduit. BellSouth shall install inner-ducts to increase duct space in existing conduit as facilities permit. The full complement of inner-ducts shall be installed that can be accommodated under sound engineering principles. The number of inner-ducts that can reasonably be installed will be determined by BellSouth, pursuant to sound engineering principles. At MCIm's request, BellSouth shall allow MCIm to install the inner-duct.

3.14 Each Party shall exercise precaution to avoid damaging the facilities of the other Party and of others attached to Pole(s), Anchor(s), or occupying a Conduit System and shall make an immediate report to the Owner of the occurrence of any such damage caused by the Party's employees, agents or contractors.

4. ADDITIONAL LEGAL REQUIREMENTS

4.1 Licenses granted under this Attachment authorize MCIm to place facilities in, or attach facilities to, poles, conduits and ducts owned or controlled by BellSouth but do not affect the rights of landowners to control terms and conditions of access to their property.

4.1.1 MCIm agrees that neither MCIm nor any persons acting on MCIm's behalf, including, but not limited to, MCIm's employees, agents, contractors, and subcontractors, shall engage in any conduct which damages public or private property in the vicinity of BellSouth's poles or conduit system, interferes in any way with the use or enjoyment of public or private property except as expressly permitted by the owner of such property, or creates a hazard or nuisance on such property, including, but not limited to, a hazard or nuisance resulting from any abandonment or failure to remove MCIm's facilities or any construction debris from the property, failure to erect warning signs or barricades as may be necessary to give notice to others of unsafe conditions on the premises while work performed on MCIm's behalf is in progress, or failure to restore the property to a safe condition after such work has been completed.

4.2 Required Permits, Certificates and Licenses. MCIm shall be responsible for obtaining any additional building permits or certificates from governmental authorities necessary to construct, operate, maintain and remove its facilities on public or private property.

4.2.1 MCIm shall not attach or place its facilities to or in BellSouth's poles, conduit or duct located on any property for which it or BellSouth has not first obtained all required authorizations.

4.2.2 BellSouth shall have the right to request evidence that all appropriate authorizations have been obtained; provided, however, that such request shall not delay BellSouth's

prelicense survey work.

4.3 Lawful Purposes. All facilities placed by MCIm in BellSouth's conduit and ducts or on BellSouth's poles, anchors or anchor/guy strands must serve a lawful purpose and the uses made of MCIm's facilities must comply with all applicable federal, State, and local laws and with all federal, State, and local regulatory rules, regulations, and requirements.

5. FACILITIES AND LICENSES

5.1 Licenses Required. Before placing any facilities in BellSouth's conduits or ducts or attaching any facilities to BellSouth's poles, anchors or anchor/guy strands, MCIm must first apply for and receive a written license from BellSouth. BellSouth shall not unreasonably deny or delay issuance of any license and, in any event, BellSouth shall issue such license within twenty (20) business days (a) after the determination has been made that make-ready work is not required, but no later than 45 days after BellSouth receives the application, which period shall exclude any time BellSouth is awaiting a response from MCIm or (b) completion of make-ready work, if make-ready work is needed.

5.2 Provision of Records and Information to MCIm. In order to obtain information regarding facilities, MCIm shall make a written request to BellSouth, identifying with reasonable specificity the geographic area for which facilities are required, the types and quantities of the required facilities and the required in-service date. In response to such request, BellSouth shall provide MCIm with information regarding the types, quantity and location (which may be provided by provision of route maps) and availability of BellSouth poles, conduit and right-of-way located within the geographic area specified by MCIm. Provision of information under the terms of this Section 5.2 shall include the right of MCIm employees or agents to inspect and copy engineering records or drawings which pertain to those facilities within the geographic area identified in MCIm's request. Such inspection and copying shall be done at a time mutually agreed upon by the Parties in the place listed in Exhibit 1 of this Attachment. The costs of producing and mailing copies of records, which are to be paid by MCIm, are on an individual case basis. The components which make up the total costs are actual:

1) Vendor costs based on the time spent researching reviewing and copying records (FL, GA, NC, SC only)
2) BellSouth employee costs based on the time spent reviewing vendor provided records (FL, GA, NC, SC only)
3) BellSouth employee costs based on the time spent researching, reviewing and copying records (AL, KY, LA, MS, TN only)
4) Copying costs
5) Shipping costs.

5.3 MCIm acknowledges that records and information provided by BellSouth pursuant to this Section may not reflect field conditions and that physical inspection is necessary to verify presence and condition of outside plant facilities and right of way. In providing

such records and information, BellSouth will not be liable to MCIm or any third party for errors/omissions contained therein, unless such errors/omissions are caused by the gross negligence or willful misconduct of BellSouth or its agents or employees.

5.4 For any information that is readily available, BellSouth shall use its best efforts to produce said information within five (5) business days {BellSouth language}-for requests to be viewed or picked up at record maintenance centers or twenty (20) business days (if mailed) of the written requests. MCIm may elect to be present at any field based survey of facilities identified pursuant to this paragraph and BellSouth shall provide MCIm at least forty-eight (48) hours' notice prior to initiating such field survey. MCIm employees or agents shall be permitted to enter BellSouth manholes and inspect such structures to confirm usability and/or evaluate condition of the structure(s) with at least forty-eight (48) hours' notice to BellSouth, with a BellSouth representative present and at MCIm's expense.

5.5 Issuance of Licenses When No Make-Ready Work is Required. If BellSouth determines that no make-ready work is required, BellSouth shall approve applications for pole attachment and conduit occupancy licenses and issue such licenses within twenty (20) business days after the determination has been made that no make-ready work is required but in no event later than 45 days after BellSouth receives the application, which period shall exclude any time BellSouth is awaiting a response from MCIm.

5.6 Assignment of Conduit, Duct and Pole Space. Within twenty (20) business days after (a) the determination that make-ready work is not required but no later than 45 days after BellSouth receives the application, which period shall exclude any time BellSouth is awaiting a response from MCIm or (b) after completion of make-ready work, if Make-Ready work is needed, BellSouth shall approve the assignment of space for pole attachment and conduit occupancy. If no make-ready work is required, such assignment shall include a granting of the license. If make-ready work is to be performed by BellSouth, such assignment shall remain in effect until make-ready costs are presented to MCIm and approval by MCIm pursuant to the time frames herein stated.

5.6.1 If MCIm approves BellSouth's make ready costs, MCIm shall have twelve (12) months from the date of assignment or sixty (60) days after completion of make-ready work by BellSouth, whichever time is later, to install its facilities. If MCIm rejects BellSouth's costs for make-ready work, but then elects to perform the make-ready work itself or through a contractor or if MCIm elects from the time of application to perform the make-ready work itself or through a contractor, MCIm shall install its facilities within twelve (12) months from the date of assignment. In the event MCIm does not install its facilities within the time frames set out in this Section 5.5.2, the assignment shall be void and such space shall become available.

6. MAKE-READY WORK

6.1 If performed by BellSouth, make-ready work to accommodate MCIm's facilities shall be included in the normal work load schedule of BellSouth with construction

responsibilities in the geographic areas where the relevant poles or conduit systems are located and shall not be entitled to priority, advancement, or preference over other work to be performed by BellSouth in the ordinary course of BellSouth's business.

6.1.1 If MCIm desires make-ready work to be performed on an expedited basis and BellSouth agrees to perform the work on such a basis, BellSouth shall recalculate the estimated make-ready charges.

6.2 All charges for make-ready work performed by BellSouth are payable in advance, with the amount of any such advance payment to be due within sixty (60) days after receipt of an invoice from BellSouth. BellSouth shall send all invoices to MCIm via overnight courier. BellSouth will schedule make-ready work for completion in a nondiscriminatory manner on a first-come first-served basis at parity with BellSouth. BellSouth will begin the process of scheduling make-ready work within twenty (20) days of receipt of payment from

6.3 Work Performed by Certified Contractor. In lieu of obtaining performance of make-ready work by BellSouth, MCIm at its option may perform the make-ready work itself or arrange for the performance of such work by a contractor. The party performing the work must be certified by BellSouth to work on or in its facilities. Certification shall be granted based upon reasonable and customary criteria employed by BellSouth in the selection of its own contract labor in accordance with FCC rules and regulations. Notwithstanding any other provisions of this Attachment, MCIm may not employ a contractor to accomplish make-ready work if BellSouth is likewise precluded from contractor selection under the terms of an applicable joint use agreement or collective bargaining agreement.

6.4 Completion of make-ready work. BellSouth will issue a license to MCIm at the time all make-ready work necessary to MCIm's attachment or occupancy has been completed.

7. APPLICATION FORM AND FEES

7.1 Application Form and Fees. To apply for a license under this Attachment, MCIm shall submit the appropriate BellSouth administrative form(s), per Exhibit 2, (two (2) sets of each and either a route map specifically indicating MCIm desired route or engineered drawings are to be included). MCIm has the option of requesting copies of BellSouth records only, requesting a records and/or field survey to determine availability, or requesting a make-ready estimate. Before the Application and Conduit Occupancy License or Application and Pole Attachment License form is approved for the attachment, make ready work must be complete or a records or field survey has determined that make ready work is not required. MCIm shall submit with MCIm's license application a proposed or estimated construction schedule as set forth below in Section 7.1.2. BellSouth will process license applications in the order in which they are received; provided, however, that when MCIm has multiple applications on file with BellSouth, MCIm may designate its desired priority of completion of prelicense surveys and make-ready work with respect to all such applications.

7.1.1 Each application for a license under this Attachment shall specify the proposed route of MCIm's facilities and identify the conduits and ducts or poles and pole facilities along the proposed route in which MCIm desires to place or attach its facilities, and describe the physical size, weight and jacket material of the cable which MCIm desires to place in each conduit or duct or the number and type of cables, apparatus enclosures and other facilities which MCIm desires to attach to each pole.

7.1.2 Each application for a license under this Attachment shall be accompanied by a proposed (or estimated) construction schedule containing the information specified below in Section 7 herein, and an indication of whether MCIm will, at it’s option, perform it’s own make-ready work.

7.2 Multiple Cables, Multiple Services, Lashing or Placing Additional Cables, and Replacement of Facilities. MCIm may include multiple cables in a single license application and multiple services (e.g., CATV and non-CATV services) may be provided by MCIm in the same cable sheath. MCIm's lashing additional cable to existing facilities of MCIm and placing additional cables in conduits or ducts already occupied by MCIm's facilities shall be permitted, and no additional fees will be applied unless otherwise specifically allowed by law; provided, however, that if MCIm desires to lash additional cable to existing facilities or place additional cables in conduits or ducts which are already occupied, or to replace existing facilities with new facilities substantially different from those described in licenses in effect, MCIm must apply for and acquire a new license specifically describing the physical size, weight and jacket material of the cable to be placed in BellSouth's conduits and ducts or the physical size, weight, and jacket type of cables and the size and weight of apparatus enclosures and other facilities to be attached to BellSouth's poles.

7.3 Single Point of Contact. Each Party hereby designates the employees named below as its single point of contact for any and all purposes of this Attachment, including, but not limited to, processing licenses and applications and providing records and information. Each Party may at any time designate a new point of contact by giving written notice of such change.

		Notices		**Billing Address**
To Licensee as follows:				
Contact				
Title		Associate Council		Contracts Administration
Company		MCIm		MCIm
Address				
Address		2400 North Glenville Drive		2270 Lakeside Blvd.
City, State, and Zip Code		Richardson Texas 75082		Richardson, Texas 75082
Telephone		972-729-6751		927-656-1397
Facsimile		972-729-6927 ATTN: LPP Network & Facilities		927-656-5888
with a copy to:		Senior Manager Route Contracts Management (Fax No. 927-656-5888)		
		2270 Lakeside Blvd., Richardson, Texas 75082		
and to Licensor as follows:				
Contact		Arthur B. Williams		
Title		Manager		
Company		BellSouth Telecommunications, Inc.		
Address		North W3D2		
Address		3535 Colonnade Parkway		
City, State, and Zip Code		Birmingham, AL 35243		
Telephone		(205) 977-5068		
Facsimile		(205) 977-7997		

8. Processing Of Applications (Including Prelicense Surveys And Field Inspections)

8.1 MCIm's Priorities. When MCIm has multiple applications on file with BellSouth, MCIm shall designate its desired priority of completion of prelicense surveys and make-ready work with respect to all such applications.

8.2 Pre-license Survey. After MCIm has submitted its written application for a license, a pre-license survey (including a field inspection) will be performed by either Party, in the company of a representative of the other Party, as mutually agreed, to determine whether BellSouth's poles, anchors and anchor/guy strands, or conduit system, in their present condition, can accommodate MCIm's facilities, without substantially interfering with the ability of BellSouth or any other authorized person or entity to use or access the pole, anchor or anchor/guy strand or any portion of BellSouth's conduit system or facilities attached to BellSouth's pole or placed within or connected to BellSouth's conduit system. If MCIm gives its prior written consent in writing, the determination of duct availability may include the "rodding" of ducts at MCIm's expense.

If pre-license survey is to be conducted by BellSouth, BellSouth will provide MCIm with a cost, based on its review of MCIm's application request, to perform the pre-license survey. All charges for pre-license work performed by BellSouth are payable in advance, with the amount of any such advance payment to be due within sixty (60) days after receipt of an invoice from BellSouth. Upon receipt of Licensee's payment of pre-license survey costs, BellSouth will schedule the survey for completion in a nondiscriminatory manner on a first-come first-served basis at parity with BellSouth.

8.2.1 The purpose of the prelicense survey is to determine whether space is available for MCIm's proposed attachments or whether MCIm's proposed attachments to BellSouth's poles or occupancy of BellSouth's conduit and ducts will substantially interfere with use of BellSouth's facilities by BellSouth and others with facilities occupying, connected or attached to BellSouth's pole or conduit system, and to provide information to MCIm for its determination of whether the pole, anchor, anchor/guy strand, conduit, duct, or right-of-way is suitable for its use.

8.2.2 Based on information provided by BellSouth, MCIm shall determine whether BellSouth's pole, anchor, anchor/guy strand, conduit and duct facilities are suitable to meet MCIm's needs.

8.2.3 BellSouth may not unreasonably refuse to continue to process an application based on BellSouth's determination that MCIm's proposed use of BellSouth's facilities will not be in compliance with applicable requirements, specifications, rules, regulations, ordinances, and laws. MCIm shall be responsible for making its own, independent determination that its use of such facilities will be in compliance with such requirements, specifications, rules, regulations, ordinances and laws. MCIm acknowledges that BellSouth is not explicitly or implicitly warranting to MCIm that MCIm's proposed use of BellSouth's facilities will be in compliance with applicable requirements, specifications, rules, regulations, ordinances, and laws.

8.3 Administrative Processing. The administrative processing portion of the prelicense survey (which includes, without limitation, processing the application, preparing make-ready work orders, notifying joint users and other persons and entities of work requirements and schedules, coordinating the relocation/rearrangement of BellSouth and/or other licensed facilities) will be performed by BellSouth at MCIm's expense. Anything to the contrary herein notwithstanding, BellSouth shall bear no responsibility for the relocation, rearrangement or removal of facilities used for the transmission or distribution of electric power.

9. ISSUANCE OF LICENSES

9.1 Obligation to Issue Licenses. BellSouth shall issue a license to MCIm pursuant to this Section 9. BellSouth and MCIm acknowledge that each application for a license shall be evaluated on an individual basis. Nothing contained in this Attachment shall be construed as abridging any independent pole attachment rights or conduit or duct access rights which MCIm may have under the provisions of any applicable federal or State laws or regulations governing access to BellSouth's poles, conduits and ducts. Each license issued hereunder shall be for an indefinite term, subject to MCIm's compliance with the provisions applicable to such license and further subject to MCIm's right to terminate such license at any time for any reason upon at least thirty (30) days' prior written notice.

9.1.1 Issuance of Licenses When No Make-Ready Work is Required. Moved to 5.5.1.

9.2 Multiple Applications. MCIm acknowledges that multiple parties, including BellSouth, may seek to place their facilities in BellSouth's conduit and ducts at or about the same time, that the make-ready work required to prepare BellSouth's facilities to accommodate multiple applicants may differ from the make-ready work required to accommodate a single applicant, that issues relating to the proper apportionment of costs arise in multi-applicant situations that do not arise in single-applicant situations, and that cooperation and negotiations between all applicants and BellSouth may be necessary to resolve disputes involving multiple applications for permission to place facilities in/on the same pole, conduit, duct, or right-of-way.

9.2.1 All applications will be processed on a first-come, first served basis.

9.3 Agreement to Pay for All Make-Ready Work Completed. MCIm's submission of written authorization for make-ready work shall also constitute MCIm' s agreement to pay additional cost-based charges, if any, for completed make-ready work.

9.4 Payments to Others for Expenses Incurred in Transferring or Arranging Their Facilities. MCIm shall make arrangements with the owners of other facilities located in or connected to BellSouth's conduit system or attached to BellSouth's poles, anchors or anchor/guy strands regarding reimbursement for any expenses incurred by them in transferring or rearranging their facilities to accommodate the placement or attachment of MCIm's facilities in or to BellSouth's structures.

9.5 All charges for make-ready work performed by BellSouth are payable in

advance, with the amount of any such advance payment to be due within sixty (60) days after receipt of an invoice from BellSouth. BellSouth shall send all invoices to MCIm via overnight courier. BellSouth will schedule make-ready work for completion in a nondiscriminatory manner on a first come first served basis at parity with BellSouth. BellSouth will begin the process of scheduling make-ready work within twenty (20) days of receipt of payment from MCIm.

9.6 License. When MCIm's application for a pole attachment or conduit occupancy license is approved, and all required make-ready work completed, BellSouth will execute and return a signed authorization to MCIm, as appropriate, authorizing MCIm to attach or place the specified facilities on BellSouth's poles or in BellSouth's conduit or ducts.

9.6.1 Each license issued under this Attachment shall authorize MCIm to attach to BellSouth's poles or place or maintain in BellSouth's conduit or ducts only those facilities specifically described in the license, and no others.

9.6.2 Except as expressly stated to the contrary in individual licenses issued hereunder, each license issued pursuant to this Attachment shall incorporate all terms and conditions of this Attachment whether or not such terms or conditions are expressly incorporated by reference on the face of the license itself. In the event of a conflict between the provisions of such license and this Attachment, the provisions of this Attachment shall control.

10. CONSTRUCTION OF MCIm's FACILITIES

10.1 Construction Schedule. MCIm shall submit with MCIm's license application a proposed or estimated construction schedule. Promptly after the issuance of a license permitting MCIm to attach facilities to BellSouth's poles or place facilities in BellSouth's conduit or ducts, MCIm shall provide BellSouth with an updated construction schedule and shall thereafter keep BellSouth informed of significant anticipated changes in the construction schedule. Construction schedules required by this Attachment shall include, at a minimum, the following information:

10.1.1 The name, title, business address, and business telephone number of the manager responsible for construction of the facilities;

10.1.2 The names of each contractor and subcontractor which will be involved in the construction activities;

10.1.3 The estimated dates when construction will begin and end; and

10.1.4 The approximate dates when MCIm or persons acting on MCIm's behalf will be performing construction work in connection with the placement of MCIm's facilities in BellSouth's conduit or ducts.

10.2 Additional Pre-construction Procedures for Facilities Placed in Conduit System. The following procedures shall apply before MCIm places facilities in BellSouth's conduit system:

10.2.1 MCIm shall give written notice of the type of facilities which are to be placed; and;

10.2.2 BellSouth shall designate the particular duct or ducts or inner ducts (if available) to be occupied by MCIm's facilities, the location and the manner in which MCIm's facilities will enter and exit BellSouth's conduit system, and the specific location and manner of installation of any associated equipment which is permitted by BellSouth to occupy the conduit system. MCIm may not occupy a duct other than the specified duct without the express written consent of BellSouth. BellSouth shall provide to MCIm space in manholes for racking and storage of up to fifty (50) feet of cable, provided space is available.

10.3 BellSouth Not Responsible for Constructing or Placing Facilities. BellSouth shall have no obligation under this Attachment to construct any facilities for MCIm or to attach MCIm's facilities to, or place MCIm's facilities in, BellSouth's poles or conduit system, except as may be necessary to facilitate the interconnection of unbundled network elements or except to the extent expressly provided under this Attachment, any license issued hereunder, or by the Telecommunications Act of 1996 or any applicable law.

10.4 MCIm Responsible for Constructing, Attaching and Placing Facilities. Except where otherwise mutually agreed by MCIm and BellSouth, MCIm shall be responsible for constructing its own facilities and attaching those facilities to, or placing them in BellSouth's poles, conduit or ducts, at MCIm's sole cost and expense. MCIm shall be solely responsible for paying all persons and entities who provide materials, labor, access to real or personal property, or other goods or services in connection with the construction and placement of MCIm's facilities and for directing the activities of all persons acting on MCIm's behalf while they are physically present on BellSouth's pole, in any part of BellSouth's conduit system or in the vicinity of BellSouth's poles or conduit system.

10.5 Compliance with Applicable Standards, Health and Safety Requirements, and Other Legal Requirements. MCIm shall construct its facilities in accordance with the provisions of this Attachment and all licenses issued hereunder.

10.5.1 Intentionally left blank.

10.5.2 Intentionally left blank.

10.5.3 MCIm shall not permit any person acting on MCIm's behalf to perform any work on BellSouth's poles or within BellSouth's conduit system without first verifying, to the extent practicable, on each date when such work is to be performed, that the condition of the pole or conduit system is suitable for the work to be performed. If MCIm or any person working on MCIm's behalf determines that the condition of the pole or conduit system is not suitable for the work to be performed, MCIm shall notify BellSouth of the condition of the pole or conduit system in question and shall not proceed with construction activities until MCIm is satisfied that the work can be safely performed.

10.6 Construction Notices. If requested to do so, MCIm shall provide BellSouth with information to reasonably assure BellSouth that construction has been performed in accordance with all applicable standards and requirements.

10.7 Intentionally left blank.

10.8 Manhole and Conduit Break-Outs. MCIm shall be permitted to add conduit ports to BellSouth manholes when existing conduits do not provide the pathway connectivity needed by MCIm, provided the structural integrity of the manhole is maintained, and sound engineering judgment is employed.

10.9 Completion of Licensee Construction. For each Licensee Attachment to or occupancy within BellSouth facilities, Licensee will provide to BellSouth's single-point of contact within sixty (60) days of Licensee construction-complete date) a complete set of actual placement drawings for posting to BellSouth records.

11. USE AND ROUTINE MAINTENANCE OF MCIm's FACILITIES

11.1 Use of MCIm's Facilities. Each license granted under this Attachment authorizes MCIm to have access to MCIm's facilities on or in BellSouth's poles, conduits and ducts as needed for the purpose of serving MCIm's customers, including, but not limited to, powering electronics, monitoring facilities, or transporting signaling.

11.2 Routine Maintenance of MCIm's Facilities. Each license granted under this Attachment authorizes MCIm to engage in routine maintenance of MCIm's facilities located on or in BellSouth's poles, conduits, ducts and rights-of-way pursuant to such license. MCIm shall give reasonable notice to the affected public authority or private landowner, as appropriate, before commencing the construction or installation of its attachments or making any material alterations thereto. MCIm shall give reasonable notice to BellSouth before performing any work, whether or not of a routine nature, in BellSouth's conduit system.

11.3 MCIm Responsible for Maintenance of MCIm's Facilities. MCIm shall maintain its facilities in accordance with the provisions of this Attachment, including, but not limited to, all requirements set forth above in this agreement herein, and all licenses issued hereunder. MCIm shall be solely responsible for paying all persons and entities who provide materials, labor, access to real or personal property, or other goods or services in connection with the maintenance of MCIm's facilities and for directing the activities of all persons acting on MCIm's behalf while they are physically present on BellSouth's poles, within BellSouth's conduit system or in the immediate vicinity of such poles or conduit system.

11.4 BellSouth Not Responsible for Maintaining MCIm's Facilities. BellSouth shall have no obligation to maintain any facilities which MCIm has attached or connected to, or placed in, BellSouth's poles, conduits, ducts or any portion of BellSouth's conduit system, except to the extent expressly provided by the provisions of this Attachment or any license issued hereunder, or by the Act or other applicable federal, State, or local laws, rules or regulations.

11.5 Information Concerning the Maintenance of MCIm's Facilities. Promptly after the issuance of a license permitting MCIm to attach facilities to, or place facilities in BellSouth's poles, conduits or ducts, MCIm shall provide BellSouth with the name, title, business address, and business telephone number of the manager responsible for

routine maintenance of MCIm's facilities, and shall thereafter notify BellSouth of changes to such information. The manager responsible for routine maintenance of MCIm's facilities shall, on BellSouth's request, identify any contractor, subcontractor, or other person performing maintenance activities on MCIm's behalf at a specified site and shall, on BellSouth's request, provide such additional documentation relating to the maintenance of MCIm's facilities as reasonably necessary to demonstrate that MCIm and all persons acting on MCIm's behalf are complying with the requirements of this Attachment and licenses issued hereunder.

11.6 Identification of Personnel Authorized to Have Access to MCIm's Facilities. All personnel authorized to have access to MCIm's facilities shall, while working on BellSouth's poles, in its conduit system or ducts or in the vicinity of such poles, ducts or conduit systems, carry with them suitable identification and shall, upon the request of any BellSouth employee, produce such identification.

12. MODIFICATION AND REPLACEMENT OF MCIm's FACILITIES

12.1 Notification of Planned Modification or Replacement of Facilities. MCIm shall, when practicable, notify BellSouth in writing at least sixty (60) days before adding to, relocating, replacing or otherwise modifying its facilities attached to a BellSouth pole, anchor or anchor/guy strand or located in any BellSouth conduit or duct. The notice shall contain sufficient information to enable BellSouth to determine whether the proposed addition, relocation, replacement, or modification is permitted under MCIm's present license or requires a new or amended license.

12.2 New or Amended License Required. A new or amended license will be required if the proposed addition, relocation, replacement, or modification:

12.2.1 Requires that MCIm use additional space on BellSouth's poles or in its conduits or ducts, including, but not limited to, any additional ducts, inner-ducts, or substantial space in any handhole or manhole, on either a temporary or permanent basis; or

12.2.2 Results in the size or location of MCIm's facilities on BellSouth's poles or in its conduit or ducts being appreciably different from those described and authorized in MCIm's then existing license (e.g., different duct or size increase causing a need to re-calculate storm loadings, guying, or pole class).

13. REARRANGEMENT OF FACILITIES AT THE REQUEST OF ANOTHER

13.1 Make-Ready Work at the Request of MCIm. If, prior to the issuance of a license, MCIm determines that any pole, anchor, anchor/guy strand, conduit or duct is inadequate to accommodate MCIm's proposed pole attachment or conduit occupancy or that it will be necessary or desirable for BellSouth or any other person or entity to rearrange existing facilities or structures to accommodate MCIm, MCIm shall promptly advise BellSouth of the make-ready work it believes necessary to enable the accommodation of MCIm's facilities.

13.1.1 BellSouth shall determine, in the exercise of sound engineering judgment, whether or not such make-ready work is necessary or possible. In determining whether make-

ready work is necessary, BellSouth shall endeavor to minimize its costs. If it is determined that such make-ready work is required, within twenty (20) business days of such determination, BellSouth shall provide MCIm with the estimated costs for make-ready work and a make-ready due date.

13.1.2 MCIm shall be solely responsible for negotiating with persons or entities other than BellSouth for the rearrangement of such persons' or entities' facilities or structures and, except where such rearrangement is for the benefit of BellSouth and/or other licensees as well as MCIm, shall be solely responsible for paying all charges attributable to the rearrangement of such facilities; provided, however, that if facilities rearrangements require new licenses from BellSouth, BellSouth shall issue such licenses in conjunction with the issuance of the applied-for license to MCIm.

13.2 Rearrangement of MCIm's Facilities at BellSouth's or Another Entity's Request. MCIm acknowledges that, from time to time, it may be necessary or desirable for BellSouth to change out poles, relocate, reconstruct, or modify portions of its conduit system or rearrange facilities contained therein or connected thereto and that such changes may be necessitated by BellSouth's business needs or by an authorized application or license of another entity seeking access to BellSouth's poles, conduit systems, ducts and/or rights-of-way. MCIm agrees that MCIm will, upon BellSouth's request, and at BellSouth's expense, but at no cost to MCIm, participate with BellSouth and other licensees in the relocation, reconstruction, or modification of BellSouth's conduit system or facilities rearrangement. MCIm acknowledges that, from time to time, it may be necessary or desirable for BellSouth to change out poles, relocate, reconstruct, or modify portions of its conduit system or rearrange facilities contained therein or connected thereto as a result of an order by a municipality or other governmental authority. MCIm shall, upon BellSouth's request, participate with BellSouth and other licensees in the relocation, reconstruction, or modification of BellSouth's conduit system or facilities rearrangement and pay its proportionate share of any costs of such relocation, reconstruction, or modification that are not reimbursed by such municipality or governmental authority.

13.2.1 MCIm shall make all rearrangements of its facilities within such period of time as is jointly deemed reasonable by the Parties based on the amount of rearrangements necessary and a desire to minimize chances for service interruption or facility-based service denial to an MCIm customer.

13.2.2 If MCIm fails to make the required rearrangements within the time prescribed or within such extended periods of time as may be granted by BellSouth in writing, BellSouth may perform such rearrangements with written notice to MCIm, and MCIm shall reimburse BellSouth for actual costs and expenses incurred by BellSouth in connection with the rearrangement of MCIm's facilities; provided, however, that nothing contained in this Attachment or any license issued hereunder shall be construed as requiring MCIm to bear any expenses which, under the Act or other applicable federal or State laws, rules or regulations, are to be allocated to persons or entities other than MCIm; and provided further, however, that MCIm shall have no responsibility for rearrangement costs and expenses relating to rearrangements performed for the purpose of meeting BellSouth's business needs or the business needs

of any other licensee/joint user.

13.2.3 MCIm will not be required to bear any of the costs of rearranging or replacing its facilities, if such rearrangement or replacement is required as a result of an additional attachment or the modification of an existing attachment sought by any entity other than MCIm, including BellSouth.

14. EMERGENCY REPAIRS AND POLE REPLACEMENTS

14.1 MCIm Responsible for Emergency Repairs to its Own Facilities. In general, MCIm shall be responsible for making emergency repairs to its own facilities and for formulating appropriate plans and practices which will enable it to make such emergency repairs. BellSouth shall be under no obligation to perform any repair or service restoration work of any kind with respect to MCIm's facilities.

14.2 In the event of an emergency, restoration procedures may be affected by the presence of MCIm facilities in or on BellSouth structures. While BellSouth maintains no responsibility for the repair of damaged MCIm facilities , it must nonetheless control access to structures if restoration of affected facilities is to be achieved in an orderly fashion.

14. 3 When an emergency situation arises which necessitates Carrier access to a manhole, MCIm should call BellSouth’s Access Customer Advocate Center (ACAC) or the Unbundled Network Element (UNE) Center. BellSouth will then arrange for access with on-call maintenance field personnel during the emergency situation. (A list of contact telephone numbers is available to MCIm for this purpose; MCIm can obtain this information from MCIm’s account manager).

14.4 If only MCIm owned facilities are affected, BellSouth shall use best efforts to respond within four (4) hours of MCIm's call requesting BellSouth personnel to be present at site of emergency. MCIm will perform emergency repair under the direction of BellSouth employee(s) or representative available, at MCIm 's sole cost and expense. Should BellSouth not respond in agreed upon time frame, MCIm will have the right to proceed with the emergency repair without BellSouth employee(s) present.

15. INSPECTION BY BELLSOUTH OF MCIm’s FACILITIES

15.1 BellSouth's Right to Make Periodic or Spot Inspections. BellSouth shall have the right to make periodic or spot inspections at any time of any part of MCIm's facilities attached to BellSouth's poles, anchors or anchor/guy strands or occupying any BellSouth conduit or duct for the limited purpose of determining whether MCIm's facilities are in compliance with the terms of this Attachment and licenses granted hereunder; provided that such inspections must be non-invasive (e.g., no splice cases may be opened).

15.1.1 BellSouth will give MCIm advance written notice of such inspections, and MCIm shall have the right to have a representative attend such inspections, except in those instances where safety considerations justify the need for such inspection without the delay of waiting until written notice has been forwarded to MCIm.

15.1.2 Such inspections shall be conducted at BellSouth's expense; provided, however, that MCIm shall bear the cost of inspections as delineated in Section 3.12.

15.2 No Duty to MCIm. Neither the act of inspection by BellSouth of MCIm's facilities nor any failure to inspect such facilities shall operate to impose on BellSouth any liability of any kind whatsoever or to relieve MCIm of any responsibility, obligations or liability under this Attachment or otherwise existing.

16. NOTICE OF NONCOMPLIANCE

16.1 Notice of Noncompliance. If, at any time, BellSouth determines that MCIm's facilities or any part thereof have not been placed or maintained or are not being used in accordance with the requirements of this Attachment, BellSouth may send written notice to MCIm specifying the alleged noncompliance. MCIm agrees to acknowledge receipt of the notice as soon as practicable. If MCIm does not dispute BellSouth's assertion that such facilities are not in compliance, MCIm agrees to provide BellSouth with a schedule for bringing such facilities into compliance, to bring the facilities into compliance within a reasonable time, and to notify BellSouth in writing when the facilities have been brought into compliance.

16.2 Disputes over Alleged Noncompliance. If MCIm disputes BellSouth's assertion that MCIm's facilities are not in compliance, MCIm shall notify BellSouth in writing of the basis for MCIm's assertion that its facilities are in compliance.

16.3 Failure to Bring Facilities into Compliance. If MCIm has not brought the facilities into compliance within a reasonable time or provided BellSouth with proof sufficient to persuade BellSouth that BellSouth erred in asserting that the facilities were not in compliance, and if BellSouth determines in good faith that the alleged noncompliance causes or is likely to cause material damage to BellSouth's facilities or those of others users, BellSouth may, at its option and MCIm’s expense, take such non-service affecting steps as may be required to bring MCIm's facilities into compliance, including but not limited to correcting any conditions which do not meet the specifications of this Attachment.

16.4 Correction of Conditions by BellSouth. If BellSouth elects to bring MCIm's facilities into compliance, the provisions of this Attachment shall apply.

16.4.1 BellSouth will, whenever practicable, notify MCIm in writing before performing such work. The written notice shall describe the nature of the work to be performed and BellSouth's schedule for performing the work.

16.4.2 If MCIm's facilities have become detached or partially detached from supporting racks or wall supports located within a BellSouth manhole, BellSouth may, at MCIm’s expense, reattach them but shall not be obligated to do so. If BellSouth does not reattach MCIm's facilities, BellSouth shall endeavor to arrange with MCIm for the reattachment of any facilities affected.

16.4.3 BellSouth shall, as soon as practicable after performing the work, advise MCIm in writing of the work performed or action taken. Upon receiving such notice, MCIm shall inspect the facilities and take such steps as MCIm may deem necessary to insure

that the facilities meet MCIm's performance requirements.

16.5 MCIm to Bear Expenses. MCIm shall bear all expenses arising out of or in connection with any work performed to bring MCIm's facilities into compliance with the requirements of this Attachment; provided, however that nothing contained in this Attachment or any license issued hereunder shall be construed as requiring MCIm to bear any expenses which, under applicable federal or State laws, rules or regulations, must be borne by persons or entities other than MCIm.

17. UNAUTHORIZED OCCUPANCY OR UTILIZATION OF BELLSOUTH'S FACILITIES

17.1 Licensing or Removal of Unauthorized Attachments. If any of MCIm's facilities shall be found attached to pole(s) or occupying conduit systems for which no license is outstanding, BellSouth, without prejudice to its other rights or remedies under this Agreement, including termination of licenses, may impose a charge and require MCIm to submit in writing, within thirty (30) days after receipt of written notification from BellSouth of the unauthorized attachment or conduit occupancy, a pole attachment or conduit occupancy license application. If such application is not received by BellSouth within the specified time period, MCIm may be required at BellSouth's option to remove its unauthorized attachment or occupancy within sixty (60) days of the final date for submitting the required application, or BellSouth may at the end of such sixty (60) day period, at BellSouth's option remove MCIm's facilities without liability, and the expense of such removal shall be borne by MCIm. Charges for any such unauthorized occupancy shall be equal to the applicable license fees and charges which would have been payable from and after the date such facilities were first placed on BellSouth's poles or in BellSouth's conduit system, if MCIm provides reasonable documentation of such placement. If MCIm is unable to provide such reasonable documentation the matter may be submitted to the Dispute Resolution Procedures set forth in Part A of this Agreement.

17.1.1 Nothing contained in the Agreement or any license issued hereunder shall be construed as requiring MCIm to bear any expenses which, under applicable federal or State laws or regulations, must be borne by persons or entities other than MCIm.

17.2 Prompt Payment of Applicable Fees and Charges. Fees and charges for unauthorized pole attachments and conduit system occupancies, as specified in this Agreement, shall be due and payable within thirty (30) days of receipt by MCIm of an itemized invoice therefor.

17.3 No Implied Waiver or Ratification of Unauthorized Use. No act or failure to act by BellSouth with regard to said unlicensed use shall be deemed as a ratification of the unlicensed use; and if any license should be subsequently issued, said license shall not operate retroactively or constitute a waiver by BellSouth of any of its rights or privileges under this Attachment or otherwise; provided, however, that MCIm shall be subject to all liabilities, obligations and responsibilities of this Attachment with respect to such unauthorized use from its inception.

18. REMOVAL OF MCIm's FACILITIES

18.1 Pole Attachments. MCIm, at its expense, will remove its attachments from any of BellSouth's poles within thirty (30) days after termination of the license covering such attachments. If MCIm fails to remove its attachments within such thirty (30) day period, BellSouth shall have the right to remove such attachments at MCIm's expense and without any liability on the part of BellSouth for damage or injury to MCIm's attachments unless caused by the negligence or intentional misconduct of BellSouth.

18.2 Conduit Occupancy. MCIm, at its expense, will remove its communications facilities from any BellSouth conduit system within sixty (60) days after:

18.2.1 Termination of the license covering such conduit occupancy; or

18.2.2 The date MCIm replaces its existing facilities in one duct with substitute facilities in another duct.

18.2.3 If MCIm fails to remove its facilities within the specified period, BellSouth shall have the right to remove such facilities at MCIm's expense and without any liability on the part of BellSouth for damage or injury to such facilities unless caused by the negligence or intentional misconduct of BellSouth.

18.3 Continuing Responsibility for Fees and Charges. MCIm shall remain liable for and pay to BellSouth all applicable fees and charges, if any, pursuant to provisions of this Agreement until all of MCIm's facilities are physically removed from BellSouth's poles or conduit system.

19. FEES, CHARGES, AND BILLING

19.1 License Charges. MCIM agrees to pay charges in Attachment 1. These rates will be recalculated during the term of this Agreement in accordance with the Telecommunications Act of 1996 and applicable FCC or State Commission rules and regulations. License charges commence on the first day of the calendar month following the date a license is issued. Such charges cease as of the final day of the calendar month preceding the month in which the attachment or occupancy is physically removed or the utilization is discontinued. A one-month minimum charge is applicable to all licenses. Such current-year charges are normally billed on or near July 1 of each year; annual billing is for the period January 1 through December 31 (six (6) months in arrears and six (6) months in advance) and to include true-up for actual billing for previous year's advance billing for period July 1 through December 31.

19.2 Computation of Charges. Attachment and occupancy rates shall be applied to the number of pole(s) and duct feet of conduit for which licenses have been issued before December 1 of each calendar year. Charges for attachment(s) and occupancy which commenced during the preceding twelve (12) month period will be prorated accordingly.

EXHIBIT 1

BellSouth Records Maintenance Centers

For **Alabama** plant and right of way records:

Records Maintenance Center
S04
1876 Data Drive
Birmingham, AL 35244

For **Kentucky** plant and right of way records:

Records Maintenance Center
Room 2-SW
601 W. Chestnut Street
Louisville, KY 40203

For **Louisiana** plant and right of way records:

Records Maintenance Center
2nd Floor North
6767 Bundy Road
New Orleans, LA 70140

For **Mississippi** plant and right of way records:

Records Maintenance Center
5723 Hwy. 18 S
Jackson, MS 39209

For **Tennessee** plant and right of way records:

Records Maintenance Center
Room 9 B 15
333 Commerce Street
Nashville, TN 37201

For **Georgia, Florida, North Carolina, and South Carolina**:

Plant Records

Records Maintenance Center
5228 Central Avenue
Charlotte, NC 28212

Right of Way Records

Regional Landbase Admin. Center
Attn.: Right of Way Records
16 GG 1 BST
301 W. Bay Street
Jacksonville, FL 32201

EXHIBIT 2

BELLSOUTH ADMINISTRATIVE FORMS AND NOTICES

This Exhibit 2 lists the types of administrative forms to be utilized in connection with this Agreement.

Type	Form Description	Form Number
General		
	Inquiry Request	GN-1
	Records Review Request	GN-2
	Pre-License Survey Request	GN-3
	Make-Ready Estimate Request	GN-4
	Building Space License Agreement for Shared Owner-Provided Access	GN-5
	CLEC Request to Complete Investigation of Facilities	GN-6
Poles		
	Application and Pole Attachment License	PL-1
	Pole Survey Form	PL-2
	Itemized Estimate	PL-3
	Notification of Surrender or Modification of Pole Attachment License	PL-4
Conduit		
	Application and Conduit Occupancy License	CN-1
	Conduit System Diagram	CN-2
	Conduit System - Manhole Detail	CN-3
	Cable to Occupy Conduit	CN-4
	Equipment Housings to be Placed in Manholes	CN-5
	Conduit Make-Ready Work & Charges	CN-6
	Notification of Surrender or Modification of Conduit Occupancy License	CN-7
	Request for Entry into Manhole(s) and/or Vaults	CN-8
	Request to “Rod” and/or Clearing of Ducts	CN-9
	Request to Core Bore and/or Modify Manhole(s)	CN-10
	Spare and/or Emergency Reservation	CN-11
Right of Way		
	Application and Right of Way Occupancy License	RW-1
Notification		
	Construction Performed and/or Completed	NT-1
	Lashing to Third Party Facilities	NT-2
	Dispute of Make-Ready Charges	NT-3
	Change in Priority for Processing Applications	NT-4
	Change of SPOC	NT-5
	Maintenance Manager	NT-6
	Inspection and Compliance	NT-7
	Unsafe Conditions	NT-8
	Dispute of Compliance	NT-9
	Facilities Brought into Compliance	NT-10
	BellSouth Notifications	NT-11
	Licensee Notifications	NT-12
	Consent of Licensor	NT-13

TABLE OF CONTENTS

Attachment 7

NUMBER PORTABILITY

SECTION 1. BELLSOUTH PROVISION OF NUMBER PORTABILITY 2

SECTION 2. INTERIM NUMBER PORTABILITY (INP) 2

SECTION 3. LOCAL NUMBER PORTABILITY (LNP) 5

SECTION 4. REQUIREMENTS FOR INP AND LNP 7

SECTION 5. CUTOVERS 8

SECTION 6. LERG REASSIGNMENT 9

SECTION 7. RESPONSIBILITIES OF UNDERLYING NETWORK PROVIDER 9

ATTACHMENT 7

NUMBER PORTABILITY

Section 1. BellSouth Provision of Number Portability

1.1 Each Party shall provide, upon the other Party's request, Local Number Portability (LNP) and Interim Number Portability (INP) in accordance with applicable law and the terms of this Agreement. The Parties shall provide LNP in accordance with Section 3 of this Attachment. Until such time as LNP is deployed for a specific service area, the Parties shall provide INP pursuant to Section 2 of this Attachment. Consistent with the requirements to move to LNP, INP will be available until such permanent solution is implemented in an end office. In connection with all methods of moving End Users' telephone numbers from one Party's switch to the other Party's switch, the Parties will use reasonable efforts to minimize impairment of functionality, quality, reliability and convenience to End Users.

1.2 Cost Recovery for INP. Each Party shall bear its own costs to develop INP features, but charges for using INP features may be imposed in accordance with the provisions of Attachment 1.

1.3 Cost Recovery for LNP. The Parties shall comply with any and all Applicable Law regarding the ability to charge for the requests for or provision of LNP. Pursuant to the FCC rules and regulations regarding LNP, each Party shall bear its own costs in connection with requests for and provision of LNP.

1.4 End User Line Charge. Recovery of charges associated with implementing Number Portability through a monthly charge assessed to end users has been authorized by the FCC. This end user line charge will be as filed in BellSouth FCC No. 1 and will be billed to MCIm only where MCIm is a subscriber to local switching or where MCIm is a reseller of BellSouth telecommunications services. This charge will not be discounted.

Section 2. Interim Number Portability (INP)

2.1 Until the industry-wide permanent solution is implemented in an end office, BellSouth shall provide INP. INP is an interim service arrangement whereby an end user who switches subscription of his local exchange

service from BellSouth to MCIm, or vice versa, is permitted to retain the use of his existing assigned telephone number, provided that the end user remains at the same location for his local exchange service or changes locations and service providers but stays within the same local calling area or Rate Center, whichever is larger.

2.1.1 INP is not available for unassigned numbers. INP for a particular telephone number is available only from the central office originally providing local exchange service to the end user. INP for a particular assigned telephone number will be disconnected when any end user or Commission action results in the end user no longer being located within the same local calling area or Rate Center, whichever is larger.

2. 2 INP is available through either remote call forwarding ("INP-RCF"), or direct inward dialing trunks ("INP-DID"), and MCIm shall select, subject to availability, which of these methods shall be used for each application. MCIm shall specify on a per telephone number basis, and subject to availability, which method of INP is to be employed and BellSouth shall provide such method to the extent Technically Feasible. BellSouth shall make remote call forwarding available at every end office where LNP is not available.

2.3 INP-RCF is an interim method to provide subscribers with service-provider portability by redirecting calls within the telephone network. When INP-RCF is used to provide INP, calls to the ported number will first route to the Party's switch to which the ported number was previously assigned. That switch will then forward the call to a number associated with the other Party's designated switch to which the number is ported. The forwarded-to number shall be specified by MCIm or BellSouth, as appropriate. The forwarding company will provide identification of the originating telephone number, via SS7 signaling, to the receiving Party. INP-RCF provides a single call path for the forwarding of no more than one simultaneous call to the receiving Party's specified forwarded-to number. Either Party may order any additional paths to handle multiple simultaneous calls to the same ported telephone number for an additional charge as set forth in Attachment 1 to this Agreement.

2.4 SS7 signaling is required for INP Services. Calls originated from RCF ported numbers in BellSouth end offices and sent to the MCIm network must follow industry standards regarding number parameters in the SS7 Initial Address Message.

2.5 Each company shall be responsible for obtaining authorization from the end user for the handling of the disconnection of the end user's

service, the provision of new local service and the provision of INP services. Each company shall be responsible for coordinating the provision of service with the other to assure that its switch is capable of accepting INP ported traffic. Neither Party shall be responsible for its inability to port calls to the other Party when such inability is caused by inadequate or insufficient equipment or facilities of the other Party.

2.6 Other Provisions for INP:

2.6.1 BellSouth shall exchange with MCIm, SS7 TCAP messages as required for the implementation of Custom Local Area Signaling Services (CLASS) or other features available in the BellSouth network where technically feasible. Such CLASS and other features will be consistent with the technical references as specified by the FCC.

2.6.2 Upon notification from MCIm that it will be initiating INP, BellSouth shall disclose to MCIm any technical or capacity limitations that would prevent the use of the requested INP method in a particular switching office. The Parties shall cooperate in the process of porting numbers to minimize subscriber out-of-service time, including updating switch translations where necessary within time frames at parity with time frames for conversions experienced by each Party's end users or other CLECs, but in any event each Party shall use its best efforts not to exceed thirty (30) minutes after notification that physical cut-over has been completed (or initiated).

2.6.3 BellSouth shall send the appropriate CARE transaction to notify the appropriate IXC that access is now provided by a new CLEC for that number.

2.7 Ordering Intervals for INP. Ordering intervals for INP shall be consistent with those offered to all CLEC's. Intervals for installation of Services shall be at such intervals as established in a generic Commission order or in a Commission order applicable to all carriers generally relating to BellSouth performance measures. For stand alone INP requests, the following will apply. For simple services, those not considered as complex, consisting of 25 lines or less and for requests to port DID numbers of 100 or less where the trunk group is existing, the following targeted intervals will apply. BellSouth will provide a firm order confirmation (FOC) or reject the Local Service Request (LSR) within two (2) business days of receipt of the request and the service interval to provision INP will be five (5) business days from receipt of an error free LSR. For other requests not mentioned above, intervals for installation of

Services shall be at such intervals as established in a generic Commission order or in a Commission order applicable to all carriers generally relating to BellSouth performance measures. INP requests associated with provisioning other services will carry intervals as defined for the service with the longer interval or as mutually agreed to on a case by case basis. Intervals for installation of Services shall be at such intervals as established in a generic Commission order or in a Commission order applicable to all carriers generally relating to BellSouth performance measures.

2.7.1 BellSouth will review the entire LSR and will reject or clarify, in accordance with Attachment 8 of this Agreement, all fields that are in error for the current version under review. BellSouth will note these errors with the rejected or clarified LSR. Subsequent versions may be rejected based on new information provided by MCIm or due to downstream edits in BellSouth's ordering or preordering systems.

2.7.2 LSR's not acknowledged within targeted intervals as provided for above, may be escalated by MCIm to BellSouth and a commitment will be agreed to for the new FOC or reject interval. BellSouth will not provision a service prior to the date contained in the FOC unless indicated to do so by a properly submitted supplemental LSR. BellSouth will provision requested services at levels that are at parity with the same intervals BellSouth provides to it's own end users, itself, or to other CLEC's.

2.8 Disconnects. MCIm will promptly notify BellSouth when (i) a Customer ported via INP disconnects service from MCIm or (ii) upon the termination of any intercept treatment provided to a subscriber ported via INP, whichever is later. BellSouth shall accept an accurately submitted supplemental request to cancel or change the Appointment Date prior to the date and time contained in the FOC and will work cooperatively to ensure service outage experience by End Users is minimal.

Section 3. Local Number Portability (LNP)

3.1 Each Party shall use reasonable efforts to facilitate the expeditious deployment of LNP consistent with the processes and implementation schedules for LNP deployment prescribed by the FCC. In connection with the provision of LNP, the Parties agree to support and comply with all relevant requirements or guidelines that may be adopted by the state Commission or the FCC. Such requirements and guidelines include, but are not limited to, ordering and provisioning process flows, SMS

administration, NPAC administration, regression testing, and network architecture as described in the Second Report and Order (FCC 97-289). The Parties shall implement the generic requirements for LNP as ordered by the FCC and recommended by the NANC. The Parties shall work cooperatively to implement standards adopted by the North American Numbering Council (NANC) or telecommunications industry fora.

3.2 The requirements for LNP shall include the following:

3.2.1 Subscribers must be able to change local service providers and retain the same telephone number(s) consistent with FCC Rules and Regulations.

3.3 SMS Administration. The Parties will work cooperatively with other local service providers to establish and maintain contracts for the LNP Service Management System (SMS).

3.4 Ordering. To port a telephone number using LNP, the Parties shall adhere to the procedures described in Attachment 8 of this Agreement.

3.5 Network Architecture

3.5.1 Architecture shall be consistent with the FCC's 2nd Report and Order.

3.6 Signaling. In connection with LNP, each Party agrees to use SS7 signaling in accordance with applicable FCC Rules and Orders.

3.7 N-1 Query. BellSouth and MCIm will adhere to the NANC recommendations as adopted by the FCC in Order No. 97-298, released August 18, 1997.

3.8 Porting of Reserved Numbers and Suspended Lines. Customers of each Party may port numbers, via LNP, that are in a denied state or that are on suspend status. In addition, Customers of each Party may port reserved numbers that the Customer has paid to reserve. Portable reserved numbers are identified on the Customer's CSR. In anticipation of porting from one Party to the other Party, a Party's subscriber may reserve additional telephone numbers and include them with the numbers that are subsequently ported to the other Party. It is not necessary to restore a denied number before it is ported.

3.9 Splitting of Number Groups. If blocks of subscriber numbers (including, but not limited to, DID numbers and MultiServ groups) are split

in connection with an LNP request, the Parties shall permit such splitting. BellSouth and MCIm shall offer number portability to customers for any portion of an existing block of DID numbers without being required to port the entire block of numbers. BellSouth and MCI shall permit end users who port a portion of DID numbers to retain DID service on the remaining portion of numbers. If a Party requests porting a range of DID numbers smaller than a whole block, that Party shall pay the applicable charges for doing so as set forth in Attachment 1 of this Agreement.

3.10 Intercept Announcement - Cause Code 26. If a call to a ported number is routed to either Party's switch, even though the LRN signaled on the call is for the receiving Party's switch, then the receiving Party's switch will provide Cause Code 26 treatment either (i) by playing an appropriate intercept announcement; or (ii) by releasing the call back to the originating switch with the release cause shown as Code 26. The intercept announcement played in this situation will suggest that the call be re-tried at a later time; the caller must not be encouraged to immediately retry the call. This Section 3.10 shall not relieve the Parties of any of their LNP duties and obligations as set forth in this Section 3.

Section 4. Requirements for INP and LNP

4.1 Call Referral Announcements. If a ported number is disconnected and "snaps back" to the Old Service Provider, the New Service Provider may order call referral announcements and specify the particular announcement from the Old Service Provider, on a per telephone number basis, at the prices set forth on Attachment 1 of this Agreement.

4.2 BellSouth and MCIm shall cooperate to ensure network reliability is maintained when porting numbers so as to limit service outages for their end users. BellSouth and MCIm will perform on a mutually agreeable basis any testing which may be required to isolate and repair service problems within their respective networks. Each Party will notify the other of changes to the network of changes to processes which may impact end user service at time frames which are consistent to BellSouth's and MCIm's internal notification processes.

4.3 Conversion from INP to LNP**.** Once a long-term database method of providing Local Number Portability (LNP) is implemented in an end office, with advance written notice, neither Party shall provide new number portability arrangements in that end office using INP. The official notice advising an end office is now LNP compatible will be as posted in the LERG forty five (45) days in advance of the ready to port date of that office. Advance notice of LNP implementation for all Bellsouth end offices

is also posted on the Interconnection web site. The LERG posting for LNP eligibility date will begin the transition from INP to LNP for all INP services. The transition from existing INP arrangements to LNP shall occur within one hundred twenty (120) days from the date LNP is implemented in the end office or as mutually agreed to by both Parties during the transition period. BellSouth will provision Local Service Requests for INP with due dates contained prior to the end office implementation date. Requests for INP with due dates after the LNP implementation date will be returned to the requesting Party for supplemental submission as LNP. Neither Party shall charge the other Party for conversion from INP to LNP. The Parties shall comply with any INP/LNP transition processes established by the FCC and State Commissions and appropriate industry number portability work groups.

4.4 Notwithstanding the foregoing, the Parties acknowledge that the FCC has determined once LNP has been deployed pursuant to the FCC's orders, rules and regulations, that all local exchange carriers (LECs) have the duty to provide LNP. Therefore, either Party, at any time, may seek appropriate legal or regulatory relief concerning the transition from INP to LNP or other related issues.

Section 5. Cutovers

5.1 BellSouth and MCIm shall cooperate in the process of porting numbers consistent with those guidelines as specified in the Local Number Portability Guidelines and as recommended by the Southeast Region Implementation Team. For a coordinated conversion i.e. stand alone INP, INP and LNP with an SL2 loop or with SL1 when ordered, and those services that require project coordination as defined in the BellSouth LNP procedures or as provided for in this Agreement. BellSouth shall verbally coordinate the disconnect with MCIm and perform any switch translations so as to limit end user service outage. BellSouth and MCIm will mutually agree upon a cutover time prior to the actual conversion. MCIm may designate the conversion time when the conversion involves a loop with INP or LNP by ordering time specific conversion at rates set forth in Attachment 1 of this Agreement. Both parties will use best efforts to ensure mutually agreed to conversion times, as identified in this paragraph, will commence within 30 minutes of the agreed time.

5.2 Cutover Intervals. Cutover intervals for INP, INP with loop and LNP with loop will be in accordance with intervals for installation of Services established in a generic Commission order or in a Commission order

applicable to all carriers generally relating to BellSouth performance measures.

5.3 Deadline for Canceling an Order. BellSouth shall accept a request to cancel an order consistent with those processes specified in the NANC recommended flows for LNP provisioning. BellSouth will not disconnect an end users service prior to receiving the activate message from NPAC. BellSouth will receive requests to cancel LNP until the activate message is received from NPAC. BellSouth shall accept an accurately submitted supplemental request to cancel or change the Appointment Date prior to the date and time contained in the FOC and will work cooperatively to insure service outage experience by End Users is minimal.

Section 6. LERG Reassignment

6.1 If the Parties mutually agree to use LERG Reassignment as the method to move an End User's telephone numbers from one Party's switch to the other Party's switch in a particular instance, the Parties shall enter into a separate written agreement that must address terms and conditions of the reassignment, including, but not limited to, ordering processes and specific implementation procedures for the reassignment of the appropriate NXX as shown in the LERG, to the New Service Providers switch, and any applicable rates.

Section 7. Responsibilities of Underlying Network Provider

7.1 Coordination with Underlying Network Provider. If the Old Service Provider does not provide the End User's services exclusively through a network owned, operated and controlled by the Old Service Provider (i.e., where the Old Service Provider is providing the End User's services on a resale basis), the New Service Provider shall coordinate all activities between the Old Service Provider and the Underlying Network Provider in the following manner, consistent with applicable OBF guidelines:

7.1.1 The New Service Provider will obtain from the End User the name of the Old Service Provider;

7.1.2 The New Service Provider will request the End User's service record from the Old Service Provider;

7.1.3 The Old Service Provider will provide the End User's service record to the New Service Provider;

7.1.4 After the New Service Provider has obtained End User authorization to migrate the End User, the new Service Provider will provide a loss alert to the Old Service Provider;

7.1.5 The New Service Provider will provide the Underlying Network Provider with a service order that reflects the Old Service Provider as the End User and that requests that the End User's telephone numbers be ported to the New Service Provider; and

7.1.6 The Underlying Network Provider will process the service order request.

7.2 Service Responsibility. After an End User's telephone number is ported by INP, all ancillary services (including, but not limited to, 911, E911, CARE, LIDB, BLV/BLI, Directory Assistance and Direct Listing) associated with ported number(s) shall be provided consistent with the requirements of Attachments 3, 8, and 9 of this Agreement.

ATTACHMENT 8

BUSINESS PROCESS REQUIREMENTS

TABLE OF CONTENTS

Section 1. Overall Business Requirements
- 1.1 Introduction
- 1.2 ATIS Standards and Guidelines
- 1.3 Joint Implementation Agreements
- 1.4 Interface Implementation Specifications and Information Exchanges
- 1.6 Change Management and Control
- 1.7 General Procedures
- 1.8 Performance Standards
- 1.9 Provision of Specific Services

Section 2. Pre-order Requirements
- 2.1 Provision of Pre-Order OSS
- 2.2 Business Requirements for Pre-Order Functions
- 2.4 Pre-Order Interface Performance and Management
- 2.5 Database Downloads

Section 3. Ordering and Provisioning Requirements
- 3.1 Provision of Ordering and Provisioning OSS
- 3.2 General Business Requirements and Functions
- 3.4 Ordering and Provisioning Interface Performance and Management
- 3.5 Cooperative Testing

Section 4. Connectivity Billing and Recording
- 4.1 Provision of Connectivity Billing and Recording OSS
- 4.2 General Requirements and Functions
- 4.3 Billing Tapes
- 4.5 Connectivity Billing and Recording Interface Performance and Management

Section 5. Customer Usage Data
- 5.1 Provision of Subscriber Usage Data
- 5.2 General Requirements and Functions

Section 6. Maintenance and Repair
- 6.1 Provision of Maintenance and Repair OSS
- 6.2 General Business Requirements and Functions

Appendix 1 1999 BellSouth Disaster Recovery Planning for CLECs

ATTACHMENT 8

BUSINESS PROCESS REQUIREMENTS

Section 1. Overall Business Requirements

1.1 Introduction. This Attachment 8 sets forth the minimum business process requirements, business rules, usage rules, data models, data exchange methods, and other specifications necessary to permit MCIm access to the functions of BellSouth's operational support systems (i.e., pre-ordering, ordering and provisioning, billing functions, and maintenance and repair) ("OSS Functions"). BellSouth shall maintain the current and one previous version of each electronic interface. Maintenance of a previous version of an electronic interface includes the maintenance of manual processes not included in that version of the interface. Unless otherwise set forth in this Agreement, MCIm shall not use manual processes that are available in a version of an electronic interface used by MCIm.

1.1.1 The Parties acknowledge that the implementation and testing of Application-to-Application interfaces will be formally defined in a joint implementation agreement ("JIA"). The Parties may agree, in the JIA, consistent with any applicable change management processes, to alter existing OSS interfaces or manual processes or to be non-compliant with industry standards or guidelines.

1.2 Standards and Guidelines

1.2.1 Order of Precedence. Conflicts between a provision of this Agreement and any testing or implementation agreement, including joint implementation agreements ("JIAs"), shall be resolved in favor of this Agreement.

1.2.2 Standards and Guidelines. For purposes of this Agreement, the Change Control Process or CCP shall mean the collaborative forum established by BellSouth to allow BellSouth and the CLEC community to discuss, provide input regarding and vote on developments of and modifications to the manual and electronic OSS processes and interfaces. Subject to the Change Control Process, BellSouth shall base its development of OSS interfaces on applicable industry standards and guidelines, including, but not limited to:

1.2.2.1 ATIS/CLC/OBF for Pre-order, Ordering Inquiry, Ordering, Access Inquiry and Access Ordering, Provisioning and Billing.

1.2.2.2 ATIS/CLC/NIMC and ANSI for Maintenance and Repair.

1.2.2.3 ATIS/TCIF/EDI for Local Pre-order, Ordering and Provisioning, and Billing Data Models.

1.2.2.4 ATIS/T1M1.5 for Maintenance and Repair Data Models.

1.2.2.5 ATIS/TCIF/T1M1.5/ECOG for Electronic Ordering (EAO) Inquiry Access.

1.2.2.6 ATIS/TCIF for Secured Transport Specifications for Local Pre-Order (EDI/SSL3), Order (EDI/SSL3), Access Inquiry (CORBA).

1.2.2.7 ATIS/CLC/OBF/TOR for Access Ordering Secured Transport using CONNECT:Direct.

1.2.2.8 Telecordia Technologies, Inc. (Bellcore) for CABS BOS.

1.3 Joint Implementation Agreements. Within ninety (90) days of a request by MCIm, the Parties shall develop a Joint Implementation Agreement ("JIA"), based on ATIS generic implementation guidelines, as described in this Section of this Attachment, for the implementation and testing of each OSS Application-to-Application interface developed by BellSouth. The Parties shall develop a separate, single JIA for each Application-to-Application interface that incorporates integratable OSS functions, but the Parties may agree to combine local pre-ordering and local ordering into a single JIA. Each JIA must be sufficiently comprehensive to ensure that, upon completion of both Parties' obligations under the JIA, the Application-to-Application interface will be fully tested and functional. Any joint implementation agreement established under this subsection 1.3 will follow the format of the Telecommunications Industry Forum ("TCIF") Generic Implementation Guidelines ("GIG").

1.4 Interface Implementation Specifications and Information Exchanges.

1.4.1 BellSouth Custom Business Process Rules. BellSouth shall base the development of its business rules on OBF or other applicable industry guidelines. BellSouth will provide its business rules and guidelines to MCIm so as to provide the functions listed in this Attachment. BellSouth shall present MCIm with BellSouth's custom business rules down to a field level. In addition, BellSouth shall provide MCIm with BellSouth's

custom business rules for each data field. The information provided will contain BellSouth's valid values, attributes, usage conditions (required, optional, or conditional), as necessary to process successfully, in BellSouth's OSS, all of the use-case scenarios specified in a testing or implementation agreement between the Parties, including a JIA.

1.4.2 BellSouth Custom Electronic Data Interchange ("EDI") Data Model Specifications. BellSouth shall provide to MCIm BellSouth's custom EDI data modeling rules for each field in its business rules mappings and syntax to the appropriate EDI segment, data element, qualifier, and valid values for every use-case scenario specified in a testing or implementation agreement between the Parties, including a JIA.

1.4.3 Use-Case Scenarios. Both BellSouth and MCIm are permitted to provide use-case scenarios to test fully the range of all OSS Functions. In order to test the exception and error messaging responses, the use-case scenarios will test for successful transactions and for planned errors. BellSouth shall provide all of the input test data in the test database necessary for testing the use-case scenarios**.** BellSouth shall define the parameters associated with the data provided to MCIm.

1.4.4 Error Messages. BellSouth shall provide a complete list of, and definitions for, each of the error conditions and error messages or codes to be used for application or protocol events.

1.4.5 Business Activities. BellSouth, through the CCP, shall discuss and provide information regarding any known or planned business activities or priorities that may affect the time frames for developing and implementing electronic ordering and pre-ordering interfaces.

1.4.6 Secure Near Real Time Data Exchange/Transport Implementation Specifications. BellSouth shall implement, test, and operate the method of secured ordering and provisioning transactions transport in compliance with TCIF 98-006 Issue 2 "Electronic Communications Interactive Agent Specification". This is the ATIS-approved specification for sending EDI transactions over TCP/IP using SSL3 security. If BellSouth's interactive agent is not already operational, BellSouth shall make it operational within sixty (60) days after MCIm's written request.

1.4.6.1 For local order and pre-order, BellSouth shall implement and use the most current version of TCIF 98-006 "Electronic Communications Interactive Agent Specification for Local Pre-Order Function".

1.4.6.2 For access order inquiry BellSouth shall implement and use the most current version of TCIF 98-002 "Generic Electronic Communications Interface Implementation Guidelines for Electronic Access Ordering (EAO) Access Inquiry Functions".

1.4.7 Testing. BellSouth shall jointly test each OSS Application-to-Application interface with MCIm. This testing will include, but not be limited to, secured connectivity and data exchange, interoperability testing, regression testing, and acceptance testing. This testing will validate, with the use-case scenarios designated in subsection 1.4.3 of this Attachment, BellSouth's custom business rules and custom data model specifications. This testing will be conducted by means of MCIm transmitting transactions both in simulated pre-coding condition testing, and later in a "post-coding/pre-production" condition testing. BellSouth and MCIm will also identify under what circumstances any interoperability test results may be shared or made public by either Party.

1.5 BellSouth OSS interfaces shall provide MCIm with the same process and system capabilities for residential and business services. BellSouth shall not require MCIm to develop distinct processes or OSS interfaces by class of service.

1.6 Change Management and Control.

1.6.1 BellSouth and MCIm shall comply with the written change management and control procedures agreed to in the CCP. Changes to the change management and control procedures proposed by either Party, including guidelines for change management and control procedures developed by the industry, shall be considered by the CCP. These procedures will govern the steps necessary to change, alter or modify the OSS Functions or the Application-to-Application interface(s) designed, developed, tested, and deployed under this Attachment 8. The provisions of the change management and control procedures and processes are material to this Agreement.

1.7 General Procedures

1.7.1 Master Account Establishment. If MCIm requests that BellSouth establish a new account for Services, MCIm will provide to the appropriate BellSouth service center the necessary documentation to enable BellSouth to establish a master account for MCIm's resold services. Such documentation shall include the Application for Master Account, proof of authority to provide telecommunications services, an Operating Company Number ("OCN") assigned by the National Exchange

Carriers Association ("NECA") and a tax exemption certificate, if applicable.

1.7.2 BellSouth will not require End User confirmation prior to establishing service for MCIm's End User customers.

1.7.3 If, based on an End User complaint, either Party (the "Complaining Party") determines that the other Party (the "Changing Party") has submitted an unauthorized change in local service, the Parties will reestablish service for the End User with the appropriate local service provider. The Complaining Party will notify the Changing Party of the customer complaint, and the Changing Party may provide proof that the change was authorized. If the Changing Party is unable to provide such proof, the Complaining Party may assess the Changing Party, as the LEC initiating the unauthorized change, any applicable unauthorized change charge approved by the Commission. No charges will be assessed if the Changing Party provides proof that the change was authorized

1.7.4 BellSouth, to safeguard its interests, may require a security deposit prior to or at any time after the provision of a Service to be held as a guarantee of the payment of rates and charges only where MCIm has a proven history of late payments to BellSouth or does not have established credit. Such deposit shall not exceed the actual or estimated rates and charges for the Services for a two (2) month period. The fact that a deposit has been made in no way relieves MCIm from complying with this Agreement as to the prompt payment of bills. At such time as the provision of Services to MCIm is terminated, the amount of the deposit will be credited to MCIm's account and any credit balance that may remain will be refunded. To the extent such a deposit is required under the terms of this Section, such deposit shall be refunded or credited to MCIm's account when MCIm has established credit, or in any event, after MCIm has established a one (1) year prompt payment record at any time prior to the termination of the provision of Service. In the case of a cash deposit, for the period the deposit is held by BellSouth, MCIm will receive interest at the same percentage rate as set forth in subsection 4.2.11 of this Attachment. The rate will be compounded daily for the number of days from the date the deposit is received by BellSouth to and including the date such deposit is credited to MCIm's account or the date the deposit is refunded. Should a deposit be credited to MCIm's account, as indicated above, no interest shall accrue on the deposit from the date such deposit is credited to MCIm's account.

1.7.5 Customer Contact. BellSouth shall recognize MCIm as the Customer of record for all Services and Interconnection ordered by MCIm, and shall send all notices, invoices, and information that pertains to these ordered services directly to MCIm. MCIm will provide BellSouth with addresses to which BellSouth must send these notices, invoices, and information.

1.7.5.1 MCIm will be the single point of contact with BellSouth for all subsequent ordering activity resulting in additions or changes to resold services except that BellSouth will accept a request directly from the End User for conversion of the End User's service from MCIm to BellSouth or will accept a request from another CLEC for conversion of the End User's service from MCIm to the other LEC. BellSouth will notify MCIm, via a loss notification report, that such a request has been processed. BellSouth shall not use MCIm resold customer records for its own marketing purposes, nor make such records available to other CLECs. If BellSouth requires information contained in the MCIm resold customer records in order to make a conversion, BellSouth shall seek this information from MCIm, which MCIm shall provide in a timely manner.

1.7.5.2 Each Party shall ensure that that Party's personnel who may receive inquiries, relating to the other Party's services, from the other Party's subscribers, or otherwise have opportunity for contact, relating to the other Party's services, with the other Party's subscribers: (i) provide appropriate referrals and telephone numbers to subscribers who inquire about the other Party's services or products; (ii) do not in any way disparage or discriminate against the other Party, or its products or services; and (iii) do not provide information about their products or services during that same inquiry or subscriber contact, unless that information specifically is requested by the subscriber. Subject to the limitations of this Section, both Parties maintain the right to serve directly any End User within the service area of the other Party. Both Parties may directly market their own telecommunications products and services and in doing so may establish independent relationships with End Users of the other Party.

1.7.5.3 Neither Party shall use the other Party's request for Customer information, order submission, or any other aspect of the pre-order, ordering and provisioning, or maintenance and repair processes or any other processes to aid its marketing or sales efforts. BellSouth shall not in any manner share with or disclose to

BellSouth's retail operations or retail customer representatives any information resulting from, or the occurrence of any event in, the pre-order, ordering and provisioning, maintenance and repair, or billing functions.

1.7.5.4 In general, BellSouth will not become involved in disputes between MCIm and MCIm's End User customers. If a dispute does arise that cannot be settled without the involvement of BellSouth, MCIm shall contact the designated Service Center for resolution. BellSouth will make every effort to assist in the resolution of the dispute and will work with MCIm to resolve the matter in as timely a manner as possible.

1.7.5.5 Where BellSouth provides switching, BellSouth will process calls made to its Annoyance Call Center and will advise MCIm when it is determined that annoyance calls are originated from one of their End User's locations. It is the responsibility of MCIm to take the corrective action necessary with its End Users who make annoying calls. BellSouth shall provide Annoyance Call Center service to MCIm's customers at no charge to MCIm.

1.7.6 Account Management. BellSouth will identify to MCIm one or more BellSouth representatives that will serve as MCIm's account management team for purposes of administering this Agreement and ensuring that BellSouth's obligations under this Agreement are carried out efficiently and in coordination with MCIm. The account management team's primary function is to interact with the various BellSouth operating groups on MCIm's behalf. The account management team shall be accessible to MCIm personnel to provide timely and decisive responses to MCIm's inquiries, escalations, and requests.

1.7.6.1 Expedite and Escalation Procedures.
BellSouth and MCIm shall maintain mutually acceptable escalation and expedite procedures for OSS Functions that may be invoked to facilitate rapid and timely resolution of issues. These procedures shall include, at a minimum, contact names and telephone numbers.

1.7.6.2 At MCIm's request, BellSouth's account management personnel shall meet with MCIm to discuss ways to improve the account management team and its functions.

1.7.6.3 BellSouth shall make available to MCIm via an online viewer (via the Internet) any and all non-proprietary materials or information to which the account management team directs MCIm.

1.7.7 Training Support

1.7.7.1 BellSouth will ensure its employees are trained on the provisions of this Agreement, Applicable Law, and any other matters mutually agreed to by the Parties.

1.7.7.2 BellSouth shall make available to MCIm employees training on BellSouth's systems and processes. This training shall be equal in quality to that which BellSouth provides to itself, its affiliates, or other CLECs. BellSouth makes available basic CLEC training on its web site and shall provide one free seat each year for MCIm to attend a training session on each of BellSouth's OSS systems (e.g., TAG, LENS and TAFI). Training regarding any systems changes or modifications shall also be available on BellSouth's web site. Other training customized for MCIm's need shall be provided at rates established by BellSouth. Information and materials provided to MCIm must include, at a minimum, operational and procedural information, and BellSouth-specific system access/interface instruction.

1.7.8 Number Administration

1.7.8.1 BellSouth shall provide testing and loading of MCIm's NXXs in BellSouth's switch network prior to the date of activation specified in the Local Exchange Routing Guide ("LERG"). Turn-up testing of MCIm's NXXs will be performed in all affected BellSouth end offices and tandem offices.

1.7.8.2 Where MCIm has obtained its own NXX, but has purchased BellSouth services for resale or has purchased switching from BellSouth, BellSouth agrees to administer the MCIm NXX in accordance with the LERG. Where MCIm provides its own switching and obtains its own NXX code, BellSouth agrees to install the routing in its switches according to the local calling area defined by the Commission.

1.7.8.3 BellSouth shall accept MCIm orders with assigned vanity numbers and blocks of numbers assigned for use with Complex Services.

1.7.8.4 <u>NXX Migration.</u> Migration of NXXs will be done according to the provisions of Attachment 7 of this Agreement.

1.7.8.5 For resold Services, telephone numbers may normally be retained by the End User. Neither the Parties nor any End Users have a property right to the telephone number, and no right to being served by any particular central office. BellSouth reserves the right to change such numbers, or the central office designation associated with such numbers, or both, at Parity and on a non-discriminatory basis, whenever BellSouth deems it necessary to do so in the conduct of its business.

1.7.8.6 During the term of this Agreement, MCIm shall contact the numbering resources administrator designated by the FCC for the assignment of central office codes and other numbering resources.

1.7.8.7 Where BellSouth is providing local switching, MCIm may utilize BellSouth's telephone numbers. Assignment, reservation and use of telephone numbers shall be governed by Applicable Law.

1.7.9 Customer Payment History. BellSouth will participate in NCTDE (National Consumer Telecommunications Data Exchange) and commit to providing NCTDE with two (2) years of historical information on UCAs for their local accounts and also report current UCA information in accordance with NCTDE required timelines for the purpose of providing MCIm with third party access to Customer Payment History. BellSouth will make the following Customer payment history information available in accordance with the NCTDE format to the extent the same is available for BellSouth's own use for each Person or entity that applies for (i) local service; or (ii) intraLATA toll Telecommunications Service(s). As of the effective date of this Agreement, BellSouth provides information to NCTDE regarding payment history of BellSouth residential End Users. During the term of this Agreement, BellSouth will continue to provide such information to NCTDE provided that: (1) NCTDE continues to accept information from BellSouth through the third party administrator BellSouth currently uses in the same format and under the same terms and conditions as such information is currently provided; (2) the third party administrator that BellSouth currently uses to provide such information to NCTDE continues to administer the data transmission function on BellSouth's behalf on the same terms and conditions as exist currently; (3) NCTDE does not impose any charges on BellSouth for BellSouth's provision of such information; (4) BellSouth is not required to join NCTDE as a participant or recipient of data from NCTDE in order to continue providing information as described herein; and (5) there is no change in law or enforcement of any existing law that, in BellSouth's legal judgment, imposes an unreasonable risk on BellSouth in connection with its

provision of the information to NCTDE. The Parties agree that in the event BellSouth ceases providing such information to NCTDE, the Parties will work cooperatively to develop a mutually acceptable alternative arrangement for BellSouth to provide the information to MCIm, either directly or through a third party. In determining whether such alternative arrangement will be acceptable to either Party, the Parties may consider, among other things, cost and administrative burden.

1.7.10 BellSouth shall not refuse service to MCIm for any potential MCIm subscriber on the basis of that subscriber's past payment history with BellSouth.

1.7.11 The provision of Services by either Party to the other shall not create a property interest of the served Party in the providing Party's facilities or equipment.

1.8 Performance Standards. BellSouth shall comply with the intervals set forth in this Attachment, and the provisions of Attachment 10 of this Agreement. .

1.9 Provision of Specific Services

1.9.1 Caller ID

1.9.1.1 When BellSouth is providing switching, BellSouth shall provide all relevant ordering process information necessary for MCIm to order both Caller ID and Caller ID with Name for MCIm Customers.

1.9.1.2 BellSouth shall use its best effort in working with MCIm to ensure that Caller ID and Caller ID with Name work for both local and 1+ calls for MCIm Customers.

1.9.2 TTY/TDD. BellSouth shall cooperate with MCIm to provide services necessary to serve TTY/TDD Customers.

1.9.3 Telephone Line Number Calling Cards. When an End User changes local service from BellSouth to MCIm, BellSouth will terminate its existing telephone line number-based calling cards and remove any BellSouth-assigned Telephone Line Calling Card Number (including area code) ("TLN") from the LIDB, and BellSouth shall use its best efforts to remove the TLN from the LIDB within twenty-four (24) hours from completion of the service order. MCIm may issue a new telephone calling card to such subscriber, utilizing the same TLN, and MCIm shall have the right to enter such TLN in LIDB for calling card validation purposes via the

service order process. BellSouth will direct-bill each subscriber on the subscriber's final bill.

1.10 Use of Facilities. When a customer of MCIm elects to discontinue service and transfer service to another local exchange carrier, including BellSouth, BellSouth shall have the right to reuse the facilities provided to MCIm by BellSouth for retail or resale service, or individual loops and/or ports for that customer. In addition, BellSouth may disconnect and reuse facilities when the facility is in a denied state and BellSouth has received an order to establish new service or transfer service from a customer of MCIm at the same address served by the denied facility.

1.10.1 Upon receipt of a service order, BellSouth will do the following:

1.10.1.1 Process disconnect and reconnect orders to provision the service which shall be due-dated using current interval guidelines.

1.10.1.2 Reuse the serving facility for retail, resale service, or individual loop(s) and/or port(s) at the same location.

1.10.1.3 Notify MCIm subsequent to the disconnect order being completed.

Section 2. Pre-Order Requirements

2.1 Provision of Pre-Order OSS

2.1.1 BellSouth shall provide MCIm use of BellSouth's pre-order OSS Function by providing MCIm the pre-order information and data set forth in this Agreement.

2.1.2 The Parties shall work together to increase electronic ordering and flow through for complex and manually ordered services. Until BellSouth makes available a tested electronic Local Service Request ("LSR") process, MCIm shall be entitled to order DS1 Combos (DS1 loop plus DS1 interoffice transport) using the electronic Access Service Request ("ASR") process.

2.1.3 Subject to applicable laws and regulations, BellSouth shall provide MCIm with access to customer profile information (i.e., customer service record and customer payment history required under subsection 1.7.9 of this Attachment) and all other pre-order information without requiring MCIm to produce a signed or written letter of agency ("LOA"). Instead,

BellSouth shall accept MCIm's blanket representation that a customer has authorized MCIm to obtain this information or data, including any Customer Proprietary Network Information ("CPNI") contained in the information or data.

2.1.3.1 The Parties shall work cooperatively through the CCP to reach a reasonable and timely solution to the issue of parsing CSRs to the same level as the LSR, or as otherwise determined by the CCP.

2.1.4 BellSouth shall provide MCIm with pre-order functionalities and information for all Services, regardless of the ordering method, at a level of quality that is at least equal to what BellSouth provides itself, its Customers, subsidiaries, or Affiliates, or any third party.

2.2 Business Requirements for Pre-Ordering Functions

2.2.1 Loop Makeup (LMU)

2.2.1.1 <u>Description of Service</u>

2.2.1.1.1 BellSouth shall make available to MCIm, Loop Makeup (LMU) information for BellSouth network facilities, for telephone numbers, circuit identifications, or service addresses specified by MCIm, except for facilities designated for use by other carriers, so that MCIm can make an independent judgment about the availability and capability of loop facilities to support MCIm provided services. This subsection addresses LMU as a preordering transaction, distinct from MCIm ordering any other service(s). Loop Makeup Service Inquiries (LMUSI) for preordering loop makeup are likewise unique from other preordering functions with associated service inquiries (SI) as described in this Agreement.

2.2.1.1.2 BellSouth will provide MCIm LMU information consisting of the composition of the loop material (copper/fiber); the existence, location and type of equipment on the loop, including but not limited to digital loop carrier or other remote concentration devices, feeder/distribution interfaces, bridged taps, load coils, pair-gain devices; the loop length; the wire gauge and electrical parameters.

2.2.1.1.3 BellSouth's LMU information is provided to MCIm as it exists either in BellSouth's databases or in its hard copy facility records. BellSouth does not guarantee

accuracy or reliability of the LMU information provided, but BellSouth shall provide the same information to MCIm that it provides to itself.

2.2.1.1.4 MCIm may choose to use equipment that it deems will enable it to provide a certain type and level of service over a particular BellSouth loop. The determination shall be made solely by MCIm and BellSouth shall not be liable in any way for the performance of the advanced data services provisioned over said loop. For facilities reserved using a LMUSI, when MCIm orders a loop, the specific loop type (ADSL, HDSL, or otherwise) ordered on the LSR must match the LMU of the loop reserved taking into consideration any requisite line conditioning. The LMU data is provided for informational purposes only and does not guarantee MCIm's ability to provide advanced data services over the ordered loop type. Further, if MCIm orders loops that are not intended to support advanced services (such as UVL-SL1, UVL-SL2, or ISDN compatible loops) and that are not inventoried as advanced services loops, the LMU information for such loops is subject to change at any time due to modifications and/or upgrades to BellSouth's network. MCIm is fully responsible for any of its service configurations that may differ from BellSouth's technical standard for the loop type ordered.

2.2.2 Submitting Loop Makeup Service Inquiries

2.2.2.1 MCIm may obtain LMU information by submitting a LMUSI mechanically or manually. Mechanized LMUSIs should be submitted through BellSouth's Operational Support Systems interfaces. After obtaining the loop from the mechanized LMUSI process, if MCIm needs further loop information in order to determine loop service capability, MCIm may initiate a separate Manual LMUSI for a separate nonrecurring charge as set forth in Attachment 1 of this Agreement.

2.2.2.2 Manual LMUSIs shall be submitted by electronic-mail to BellSouth’s Complex Resale Support Group (CRSG)/Account Team utilizing the Preordering Loop Makeup Service Inquiry form. The service interval for the return of a Loop Makeup Manual Service Inquiry is three (3) business days. Manual LMUSIs are not subject to expedite requests. This service interval is distinct from the interval applied to the subsequent service order.

2.2.3 Loop Reservations

2.2.3.1 MCIm may reserve facilities for up to four (4) calendar days for each facility requested on a LMUSI from the time the LMU information is returned to MCIm. During and prior to MCIm placing an LSR, the reserved facilities are rendered unavailable to other customers, including BellSouth. If MCIm does not submit an LSR for a UNE service on a reserved facility within the four (4) day reservation timeframe, the reservation of that spare facility will become invalid and the facility will be released. For a Mechanized LMUSI, MCIm may reserve up to ten (10) loop facilities. For a Manual LMUSI, MCIm may reserve up to three (3) loop facilities.

2.2.3.2 Charges for preordering LMUSI are separate from any charges associated with ordering other services from BellSouth.

2.2.4 Ordering of Other UNE Services

2.2.4.1 All LSRs issued for reserved facilities shall reference the facility reservation number as provided by BellSouth. MCIm will not be billed any additional LMU charges for the loop ordered on such LSR. If however, MCIm does not reserve facilities upon an initial LMUSI, MCIm's placement of an order for an advanced data service type facility shall be deemed placed for such a facility rate element that "includes manual service inquiry and reservation" per the rates set forth in Attachment 1 of this Agreement.

2.2.4.2 Where MCIm has reserved multiple loop facilities on a single reservation, MCIm may not specify which facility shall be provisioned when submitting the LSR. For those occasions, BellSouth will assign to MCIm, subject to availability, a facility that meets the BellSouth technical standards of the BellSouth type loop as ordered by MCIm.

2.3 MCIm shall immediately file a request with the Change Control Process for the determination of the proper avenue for the implementation of service inquiry as a pre-ordering function. Upon request of either Party, the Parties shall amend this Agreement to incorporate the process so developed.

2.4 Pre-Order Interface Performance and Management. BellSouth will provide a Specialized Point of Contact (“SPOC”) for its OSSs, that will provide the following support to MCIm for the various BellSouth OSS interfaces. The SPOC will provide technical assistance to MCIm dealing with all associated production

systems, the interface itself, and it's operability. The SPOC will also provide escalation support twenty-four (24) hours seven (7) days a week.

2.5 Database Downloads

2.5.1 Regional Street Address Guide(RSAG). BellSouth shall provide MCIm with BellSouth's RSAG data through a mutually agreeable electronic means. A condition precedent to obtaining the RSAG data is that MCIm and its affiliated local exchange carriers shall execute a single mutually acceptable license agreement containing the rates, terms and conditions pursuant to which MCIm and its affiliated local exchange carriers may use the data.

2.5.2 Product and Service Information Management System ("PSIMS"). BellSouth shall provide MCIm, on a monthly basis, a flat file extraction of PSIMS, which includes PIC availability as well as a list of the features and functions available on an end office-by-end office basis, via CONNECT:Direct Service. There is no charge for obtaining the PSIMS file in this manner.

Section 3. Ordering and Provisioning Requirements

3.1 Provision of Ordering and Provisioning OSS.

3.1.1 BellSouth shall provide MCIm use of BellSouth's ordering and provisioning and access ordering OSS functions at Parity. BellSouth shall provide MCIm the information and data set forth in this Section.

3.1.2 If either BellSouth's or MCIm's existing electronic ordering and provisioning or access ordering interfaces are unavailable, BellSouth shall employ a facsimile machine to facilitate the submission or processing of any new or existing service requests. BellSouth shall provide access to these facsimile machines for order receipt when notified by MCIm of any Application-to-Application interface unavailability**.** No manual OSS charges shall apply to local service requests submitted when BellSouth's existing electronic interfaces utilized by MCIm are unavailable for reasons other than scheduled maintenance, provided the downtime does not occur outside the scheduled maintenance window; or other reasonable scheduled activities for which reasonable advance notification is provided by BellSouth, and provided the activities do not occur outside the scheduled window.

3.2 General Business Requirements and Functions

3.2.1 The LCSC shall work cooperatively with MCIm to resolve any discrepancies or differences in information contained in various databases.

3.2.2 Local Carrier Service Center (LCSC)/Single Point of Contact (SPOC).

3.2.2.1 BellSouth shall provide a local carrier service center ("LCSC") or equivalent that will serve as MCIm's single point of contact (SPOC) for all activities involved in the pre-ordering, ordering, and order status of BellSouth's Services. The LCSC shall process all pre-ordering, ordering, and order status functions, including but not limited to, answering questions, resolving problems, and handling expedites and escalations, for Services requested by MCIm that require manual intervention.

3.2.2.2 The LCSC shall provide to MCIm a toll-free nationwide telephone number answered by trained personnel. Hours of availability of the LCSC shall be at least at Parity with the hours of BellSouth's retail operations. At a minimum, LCSC hours of availability will be 8 a.m. to 8 p.m. Monday through Friday. Hours for inquiries concerning UNE-P shall be at least as great as hours for residential service inquiry.

3.2.2.3 The LCSC shall work cooperatively with MCIm to resolve any discrepancies or differences in information contained in various databases.

3.2.2.4 BellSouth will perform provisioning services during the following normal hours of operation, or at such additional hours as BellSouth normally performs provisioning services for itself or another carrier:

Monday - Friday - 8:00AM - 5:00PM location time (excluding holidays)
(non-coordinated, coordinated orders and order coordinated - Time Specific)

Saturday- 8:00 AM - 5:00 PM location time (excluding holidays)
(non-coordinated orders)

Times are either Eastern or Central time based on the location of the work being performed. All other MCIm requests for

provisioning and installation services are considered outside of the normal hours of operation and will be performed subject to the application of overtime billing charges.

3.2.2.5 Ordering and provisioning measurements will be as outlined in Attachment 10 of this Agreement.

3.2.3 IntraLATA Carrier Selection

3.2.3.1 BellSouth shall provide to MCIm the capability to order local service, intraLATA, and interLATA services by entering MCIm Customer's choice of carrier on a single order. BellSouth shall provide MCIm with the capability to order separate interLATA and intraLATA carriers on a line or trunk basis.

3.2.3.2 In all cases, BellSouth will route toll calls to the appropriate carrier as designated by MCIm. BellSouth shall not be the default toll carrier in any circumstances.

3.2.4 CARE Notification to Long Distance Carrier in Resale/UNE-P Arrangements

3.2.4.1 BellSouth CARE shall notify MCIm, using OBF-approved CARE transactions, whenever an MCIm Customer who is provided local service through Local Resale or UNE-P changes their PIC status.

3.2.4.2 BellSouth shall support and implement new Transaction Code Status Indicators (TCSIs) defined by OBF in support of Local Resale and UNE-P. BellSouth and MCIm will work cooperatively with OBF to define CARE transactions supporting local resale and UNE-P. In support of resale and UNE-P, BellSouth shall pass to MCIm all TCSIs as defined by OBF and implemented between BellSouth and an interexchange carrier.

3.2.4.3 MCIm may initiate a CARE block by submitting an LSR to deny PIC change activity on MCIm End User customers. BellSouth will then reject any PIC changes using a code of 3148 for resold lines and for service provided by UNE-P.

3.2.4.4 BellSouth CARE transactions supporting the LSR process for resale and UNE-P and account maintenance are as follows:

40XX = Local Resale Subscription order install by switch provider (SWP)

42XX = Local Resale subscription service disconnected by switch provider (SWP)

43XX = Local Resale customer information changes by switch provider (SWP)

3.2.5 Service Migrations and New Subscriber Additions

3.2.5.1 When switching is provided by BellSouth, and unless otherwise specified by MCIm, BellSouth will migrate a customer from BellSouth's services to MCIm's service without loss of feature availability and functionality and, to the extent the customer's voice mail service is available for resale to MCIm pursuant to Attachment 2 of this Agreement and MCIm chooses to purchase such voice mail service from BellSouth, without loss of voice mail (including the current mail box and its characteristics, if requested by MCIm) and associated ancillary services, including, but not limited to, Directory Listings, LIDB, Operator Services, and 911/E911. BellSouth shall not intentionally or unnecessarily interrupt feature capability.

3.2.5.2 BellSouth shall recognize MCIm as an agent for the Customer in coordinating the disconnection of services provided by BellSouth. BellSouth will disconnect the BellSouth-provided services based on the information MCIm places on the LSR. In the case of a coordinated conversion, BellSouth will work with MCIm to coordinate the disconnection and connection of the End User's service.

3.2.5.3 For coordinated loop conversions and stand alone INP, BellSouth shall verbally coordinate the disconnect with MCIm and perform switch translations so as to limit End User service outage. BellSouth and MCIm will mutually agree upon a cutover time 24 to 48 hours prior to the actual conversion. MCIm may designate the conversion time when the conversion involves a loop by requesting "order coordination -- time specific" conversion at rates set forth in Attachment 1 of this Agreement. Both parties will use best efforts to ensure mutually agreed to conversion times, as identified in this paragraph, will commence within 30 minutes of the agreed time. For subscriber conversions requiring Coordinated Cut-Over activities, on a per order basis, BellSouth and MCIm will agree on a

scheduled conversion time. BellSouth shall notify MCIm when conversion is complete. BellSouth shall comply with the performance measurements relating to End User service interruptions as set forth in Attachment 10. For coordinated conversions of other Services, BellSouth and MCIm shall work cooperatively to establish conversion procedures and rates

3.2.6 Intercept Treatment and Transfer of Service Announcements. At MCIm's request, BellSouth shall provide unbranded or MCIm-branded intercept treatment and transfer of service announcements to MCIm's Customers. BellSouth shall provide such treatment and transfer of service announcement at Parity and on a non-discriminatory basis.

3.2.7 Desired Due Date (DDD). BellSouth shall complete all service request activities for related orders on a single, common due date, provided the same common date is specified on each LSR for the related orders. This single, common date will be reflected on the Firm Order Confirmation ("FOC") of each related order.

3.2.7.1 MCIm will specify on each order the Desired Due Date (DDD). BellSouth shall not complete the order prior to the DDD, unless authorized by MCIm or later than the date on the FOC without providing a jeopardy notification.

3.2.7.2 Expedites. Requests for due dates that are earlier than the BellSouth offered date will be treated as an expedite request. In order to request an expedited due date, MCIm must request the expedite through the LCSC. The LCSC will coordinate the request internally with the appropriate groups within BellSouth in order to establish the date BellSouth will target as the offered date. The LCSC will advise MCIm of this date. BellSouth may bill expedite charges for expedited due dates and will advise MCIm of any charges at the time the offered date is provided. The rates for expedite charges are set forth in Attachment 1 of this Agreement, and no expedite charges shall apply for a request not completed by the offered date.

3.2.8 Customer Premises Inspections and Installations

3.2.8.1 Where access to the Customer's premises is required, BellSouth shall provide MCIm with the ability to schedule, at Parity, Customer premises installations.

3.2.8.2 BellSouth will provide installation of inside wiring, upon MCIm's request, on the rates, terms and conditions offered to BellSouth retail customers, as set forth in BellSouth's tariffs.

3.2.9 Firm Order Confirmation (FOC)

3.2.9.1 BellSouth shall provide to MCIm a Firm Order Confirmation ("FOC") for each MCIm LSR via the same interface used to submit the LSR. BellSouth shall send only one FOC per LSR. An electronic FOC shall contain information based on industry guidelines as developed by the CCP. A manual FOC shall contain, at a minimum, the MCIm purchase order number, BellSouth's order number, committed due date, and assigned TN (or circuit ID).

3.2.9.2 After MCIm's receipt of a BellSouth FOC, any change in the Due Date not initiated by an LSR will be considered a Jeopardy.

3.2.10 Order Rejections

3.2.10.1 BellSouth shall reject and return to MCIm any service request that BellSouth can not provision due to technical reasons or due to missing, inaccurate or illegible information. When an order is rejected, BellSouth shall, in its reject notification, specifically describe, using specified error codes, the reasons for which the order was rejected. Although BellSouth exercises its best efforts to identify all errors before rejecting the LSR to MCIm, this is not always possible. The type and severity of the error may prevent the LSR from being processed further once an error is discovered by BellSouth's system. BellSouth will identify errors in accordance with BellSouth's Local Service Request (LSR) error messages documentation, which contains all error codes applicable to any LSR and a description of the errors such codes identify. BellSouth will make available such documentation on BellSouth's interconnection web site. BellSouth will work cooperatively with MCIm as reasonably necessary to assist MCIm in identifying and understanding LSR errors and associated error codes.

3.2.11 Service Request Changes (Supplemental Service Requests)

3.2.11.1 If an installation or other MCIm-requested work requires a change from the original MCIm service request in any manner, BellSouth shall notify the appropriate MCIm ordering center

designated in advance of performing the installation or other work to obtain authorization. BellSouth shall then provide MCIm an estimate of additional labor hours or materials. After all installation or other work is completed, BellSouth shall immediately notify MCIm of the actual labor hours or materials used in accordance with regular service request completion schedules.

3.2.11.1.1 If additional work is completed on a service request, as approved by MCIm, BellSouth must report the cost of the additional work immediately to the MCIm ordering center that originated the request(s).

3.2.11.1.2 If a service request can only be partially completed, BellSouth shall notify MCIm prior to completing the request, and if MCIm approval is received, BellSouth shall follow the jeopardy procedures in subsection 3.2.13.

3.2.11.2 Where BellSouth provides installation and the MCIm Customer requests a service change at the time of installation, BellSouth shall immediately notify MCIm at the telephone number on the service order of that request. The BellSouth technician should notify MCIm in the presence of the MCIm Customer so that MCIm can negotiate authority to install the requested service directly with that Customer and the technician and revise appropriate ordering documents as necessary. At no time should the BellSouth representative perform any work not ordered by MCIm, even at the Customers' request, without approval from the MCIm ordering center.

3.2.12 Jeopardy Situations. BellSouth shall provide to MCIm notification of any known jeopardy situations prior to the Due Date. Such notification shall contain a new committed Due Date. If BellSouth is unable to provide a new committed Due Date, BellSouth shall provide MCIm a supplemental notification containing a new committed Due Date, and BellSouth shall provide a new committed Due Date at Parity and on a nondiscriminatory basis. BellSouth shall provide notice of missed appointments and any other delay or problem in completing work specified on MCIm's service request as detailed on the FOC.

3.2.13 Service Suspensions/Restorations. Where BellSouth provides switching and upon MCIm's request through a Suspend/Restore order, BellSouth shall suspend or restore service. BellSouth will deny or disconnect service to MCIm's End User on behalf of, and at the request of, MCIm. Upon restoration of the End User's service, restoral charges

will apply and will be the responsibility of MCIm. All requests for denial or disconnection shall be via an LSR.

3.2.14 Loss Notifications. BellSouth shall provide to MCIm information notifying MCIm of any services disconnected from MCIm. Such notification shall be provided electronically on a daily basis, using a system currently in place between the Parties, and any changes in the system must be mutually agreeable.

3.2.15 Completion Notification. Upon completion of a service request submitted electronically, BellSouth shall submit to MCIm, via the same electronic interface used to submit the order**,** an order completion notification that complies with the OBF/LSOG business rules and ATIS models, as modified by the CCP. Completion information for service requests submitted both manually and electronically is available via BellSouth's web-based system known as CLEC Service Order Tracking System ("CSOTS").

3.2.16 Fulfillment Process. MCIm will conduct all activities associated with the account fulfillment process for all MCIm Customers.

3.2.17 Specific Unbundling Requirements.

3.2.17.1 MCIm may order and BellSouth shall provision individual or multiple unbundled Network Elements (including any combinations to which the Parties have agreed in Attachment 3) on a single order consistent with applicable OBF guidelines.

3.2.17.2 The Parties shall work cooperatively to ensure that Network Elements and switch translations function properly to support MCIm's service offerings.

3.2.17.3 When MCIm orders Existing Combinations of Network Elements that are functional in BellSouth's network, such Existing Combinations shall remain connected and functional without any disconnection or disruption of functionality, unless otherwise specified by MCIm. Charges for such Existing Combinations shall be as provided for in Attachment 3 and Attachment 1 of this Agreement.

3.2.17.4 When MCIm orders Network Elements, BellSouth shall work cooperatively with MCIm to ensure compatibility between Network Elements where technically feasible.

3.2.17.5 When MCIm orders Network Elements or combinations specified in this Agreement, it will be BellSouth's responsibility to provide to MCIm the information necessary to support the ordering of Network Elements and combinations. This responsibility includes, but is not limited to, identification of forms required for Network Element or combination orders; fields requiring population for Network Element or combination orders, and the specific data element entries required to support these orders. BellSouth's failure to provide such information shall not preclude MCIm from ordering Services.

3.2.18 NPA Splits. BellSouth shall provide, at Parity and on a nondiscriminatory basis, advance information of the details and requirements for planning and implementation of NPA splits or other network changes impacting MCIm or its Customers.

3.2.19 BellSouth shall provide to MCIm information on charges associated with special construction.

3.2.20 BellSouth shall verify the status of connected facility assignments and notify MCIm of any conflicts.

3.2.21 USOC Codes. BellSouth shall provide MCIm with a complete, electronic copy of USOC codes, and an accompanying alphanumeric description of each code, used by BellSouth.

3.2.22 Blocking Services. Upon request from MCIm, where BellSouth provides switching, BellSouth shall provide blocking of 700, 900 and 976 services, or other services of similar type as may now exist or be developed in the future. In addition, BellSouth shall provide Billed Number Screening (BNS), including required LIDB updates, or equivalent service for blocking completion of bill-to-third-party and collect calls, on a line, trunk, or individual service basis.

3.4 Ordering and Provisioning Interface Performance and Management.

3.4.1 Ordering and Provisioning Intervals

3.4.1.1 For service requests from MCIm to BellSouth, the Parties will use an Access Service Request ("ASR"), a Local Service Request (LSR), or another request format as specified by BellSouth, which ever is applicable for the service being requested. BellSouth will process and complete service requests at such intervals for FOC returns as shall be established in a generic

Commission order or in a Commission order applicable to all carriers generally relating to BellSouth performance measurements. Intervals for installation of Services shall be at such intervals as established in a generic Commission order or in a Commission order applicable to all carriers generally relating to BellSouth performance measurements.

3.4.1.2 Orders that comprise a major project will be submitted at the same time, and their implementation will be jointly planned and coordinated by the Parties. Major projects are unusual or extraordinary projects that require the coordination and execution of multiple orders or related activities between BellSouth and MCIm work groups, including, but not limited to, the initial establishment of Local Interconnection Trunk Groups or Meet Point trunk groups or service in a service area, NXX code moves, re-homes, facility grooming, or network rearrangements.

3.5 Cooperative Testing

3.5.1 Network Testing

3.5.1.1 BellSouth shall perform all pre-service network testing, at Parity, prior to the completion of the order, including, but not limited to, testing on local service facilities and switch translations, and verification of features, functions, and services ordered by MCIm.

3.5.1.2 BellSouth and MCIm shall work cooperatively to resolve problems in either Party's network. Both Parties shall mutually agree on scheduled cooperative test times if required to isolate and clear troubles in either Party's network.

3.5.1.3 BellSouth shall perform electronic loop tests at MCIm's request and provide MCIm with results from electronic loop tests.

3.5.1.4 The Parties shall cooperate with each other to test trunks prior to turn up. Such testing shall be performed at Parity and on a nondiscriminatory basis.

3.6 LNP Orders. BellSouth and MCIm will adhere to the process flows and cutover guidelines as ordered by the FCC or as recommended by industry standard fora. BellSouth and MCIm will work cooperatively to implement changes to LNP process flows ordered by the FCC or as recommended by standard industry fora addressing LNP.

Section 4. Connectivity Billing and Recording

4.1 Provision of Connectivity Billing and Recording

4.1.1 This Section 4 describes the requirements for each Party to bill and record all charges incurred by the other Party when purchasing Services under this Agreement.

4.1.1.1 The Parties acknowledge that for billing and recording from MCIm to BellSouth, the volume of this billing and recording does not warrant nor do the Parties desire an Application-to-Application interface. Therefore, MCIm will provide BellSouth with billing and recording in paper format.

4.1.1.2 The Parties acknowledge that for billing and recording from BellSouth to MCIm the Parties have deployed an Application-to-Application interface (i.e., CONNECT:Direct). As described in more detail in this Section 4, BellSouth shall continue to provide MCIm with Connectivity Billing and recording and all related information and functionalities through the existing electronic interface, and BellSouth shall modify, enhance and upgrade that interface to conform with and satisfy the requirements of subsection 4.2 and Section 5.

4.1.2 BellSouth shall provide Connectivity Billing and recording at a level of quality that is at Parity to that which it provides to itself, its affiliates and to third parties.

4.1.3 BellSouth shall issue all Connectivity Bills in accordance with the terms and conditions set forth in this Section 4.

4.2 General Requirements and Functions

4.2.1 Compliance with ATIS standards. The Parties shall comply with various industry, OBF guidelines, and other standards referred to throughout this Agreement. To satisfy these requirements, both parties shall adhere to mutually agreed upon interpretations of all standards referred to in this Agreement. These OBF guidelines include, but are not limited to:

4.2.1.1 The Parties shall issue all Connectivity Bills containing such billing data and information in accordance with the most current version of CABS BOS, or if development time is required, within two versions of the current CABS BOS standard. To the

extent that there are no CABS BOS, or MECAB standards governing the formatting of certain data, such data shall be issued in the format mutually agreed to by BellSouth and MCIm.

4.2.1.2 BellSouth shall transmit Connectivity Billing information and data in the appropriate CABS BOS format electronically via CONNECT:Direct to the other party at the location specified by such party. MCIm data centers will be responsible for originating the calls for data transmission. BellSouth shall transmit in accordance with mutually agreed to technical specifications. MCIm will supply to BellSouth its RACF ID and password before the first transmission of data via CONNECT:Direct. Any changes to either party's CONNECT:Direct Node ID must be sent to the other party no later than thirty (30) calendar days before the changes take effect.

4.2.1.3 OBF Issue 1141 for Reciprocal Compensation (Final Closure)

4.2.1.4 OBF Issue 1201 for Interconnection Trunks (Final Closure)

4.2.1.5 OBF Issue 1202 for Unbundled Loops (Final Closure)

4.2.1.6 OBF Issue 1197 for INP (Final Closure)

4.2.1.7 OBF Issue 1215 for Resale (Final Closure)

4.2.1.8 OBF Issue 1284 for LNP (Final Closure)

4.2.1.9 OBF Issue 1287 for Unbundled Network Elements (all original seven (7) Network Elements (Final Closure)

4.2.1.10 OBF Issue 1548 for verification of UNE bills (not to Final Closure)

4.2.1.11 OBF Issue 1549 for uniquely identifying UNE usage on a bill (not to Final Closure)

4.2.1.12 OBF Issue 1667 for exchanging billing information for Unbundled Network Elements (not to Final Closure)

4.2.2 Bill Rendering. The Parties shall bill each other for each Service supplied pursuant to this Agreement at the rates forth in this Agreement. Billing may only begin upon acceptance of Service.

4.2.2.1 The Parties shall record and bill in accordance with this Agreement those charges incurred as a result of the purchase of Services, as set forth in this Agreement (hereinafter "Connectivity Charges").

4.2.2.2 The Parties will bill Connectivity Charges in a CABS BOS format. The Parties will conform each CABS BOS bill in accordance with CABS BOS guidelines.

4.2.3 Information Contained in a Connectivity Bill. Each service purchased by MCIm shall be assigned a separate and unique billing code in the form agreed to by the parties and such code shall be provided to MCIm on each Connectivity Bill in which charges for such services appear.

4.2.3.1 Each such billing code shall enable MCIm to identify the service as ordered by MCIm.

4.2.3.2 Each Connectivity Bill shall set forth the quantity and description of each such service provided and billed to MCIm. All Connectivity Charges billed to MCIm shall indicate the state from which such charges were incurred, in accordance with OBF guidelines.

4.2.3.3. When MCIm collocates with BellSouth in BellSouth's facility as described in this Agreement, capital expenditures (e.g., costs associated with building the "cage"), shall not be included in the Connectivity Bill provided to MCIm pursuant to this Attachment 8. All such capital expenses shall be given a unique BAN and invoice number. All invoices for capital expenses shall be sent to the location specified by MCIm for payment. All other non-capital recurring collocation expenses shall be billed to MCIm in accordance with this Agreement. (The CABS Billing Output Specifications ("BOS") documents provide the guidelines on how to bill the Connectivity Charges associated with collocation.) The bill label for such collocation charges shall be entitled 'Expanded Interconnection Service." The bill label for non-capital recurring collocation expenses shall be entitled "Collocation."

4.2.3.4 The Parties shall provide to each other monthly Connectivity Bills that included all Connectivity Charges incurred by and credits and/or adjustments due to the Purchasing Party for those services ordered, established, utilized, or performed pursuant to this Agreement. The Parties shall render bills in a single bill cycle. Billing Account Numbers (BANs) shall be

consolidated by service type according to OBF guidelines and as mutually agreed to by the Parties. Bill format shall be in compliance with OBF guidelines. Detailed documentation shall be sent with the bill for any debit/credit adjustments. Each bill provided by either Party shall include:

4.2.3.4.1 all non-usage sensitive charges incurred for the period beginning with the day after the current bill date and extending to, and including, the next bill date;

4.2.3.4.2 any known unbilled non-usage sensitive charges for prior periods which are incurred under this Agreement.

4.2.3.4.3 unbilled usage sensitive charges for the period beginning with the last bill date and extending up to, but not including, the current bill date for interconnection and extending through the bill date for resold services.

4.2.3.4.4 any known unbilled usage sensitive charges for prior periods which were incurred under this Agreement.

4.2.3.4.5 any known unbilled adjustments, which were incurred under this Agreement, and substantiated with complete documentation detailing specific adjustments.

4.2.3.5 The Bill Date must be present on each bill transmitted by the Parties, and must be a valid calendar date and not more than ninety (90) days old. Bills should not be rendered for any charges which are incurred under this Agreement on or before one (1) year proceeding the bill date. However, both Parties recognize that situations exists that would necessitate billing beyond the one year limit as permitted by law. These exceptions include;

+ charges connected with jointly provided services were by meet point billing guidelines require either Party to rely on records provided by a third Party.

+ charges incorrectly billed due to error in or omission of customer provided data such as PLU or PIU factors or other ordering data.

Both Parties agree that these limits will be superceded by any Bill Accuracy Certification Agreement that might be negotiated between the Parties.

4.2.3.6 In compliance with OBF issue 1141, reciprocal compensation charges will be identified as the jurisdiction of 'Local' and not as interstate, or intrastate, on each bill where 'Jurisdiction' is identified. IntraLATA toll charges will be identified as Intrastate/IntraLATA or Interstate/IntraLATA (limited states) on each bill where jurisdiction is identified. BellSouth shall provide from and through dates for charges rendered on all Connectivity Bills.

4.2.3.7 BellSouth shall separately identify business charges from residence charges, as applicable for resale, in a Connectivity Bill. In addition, BellSouth shall assign a specific adjustment or reference number provided by MCIm to each adjustment and credit included on a Connectivity Bill.

4.2.4 On Connectivity Bills BellSouth renders to MCIm, BANs will be 13 alpha/numeric characters. The Bill Date will be the same day, month to month, per BAN. Each Party will provide the other Party at least thirty (30) calendar days written notice prior to changing, deleting, or transferring services between BANs. The Parties shall provide one Connectivity Billing invoice associated with each BAN. Each invoice must contain an invoice number (which will vary from month to month). On each bill associated with a BAN, the appropriate invoice number and the charges contained on that invoice must be reflected. BellSouth shall deliver to MCIm all Connectivity Bills no later than ten (10) calendar days after the Bill Date and at least twenty (20) calendar days prior to the payment due date (as described in this Attachment), whichever is earlier. MCIm shall deliver to BellSouth all Connectivity Bills no later than ten (10) calendar days after the Bill Date and at least twenty (20) calendar days prior to the payment due date (as described in this Attachment), whichever is earlier. Any Connectivity Bill received on a Saturday, Sunday or a day designated as a bank holiday will be deemed received the next business day. If either Party fails to receive Connectivity Billing data and information within the time period specified above, the payment due date will be extended by the number of days receipt has been delayed.

4.2.5 Measurement of minutes of use will be in actual conversation seconds for those services that are billed based on conversation seconds. The total conversation seconds measured by each billing switch per chargeable rate elements will be totaled for the entire monthly bill cycle, and rounded to the next whole minute for UNEs, and rounded to the nearest whole minute for local interconnection usage. Local Resale will be billed in the increments in accordance with the BellSouth's underlying retail tariff.

4.2.6 Each Party shall provide to the other Party a single point of contact (SPOC) for handling any questions or problems regarding Connectivity Bills or that may arise during the implementation and performance of the obligations of this Section 4. Each SPOC will be available via a single telephone and telephone number (not through an answering center).

4.2.7 Official Bill. Each Party receiving bills shall indicate to the other Party a primary and secondary form of official bills sent by the other Party. The official bill will take precedence over any bill received via a different medium. In addition, BellSouth shall make available for its secondary billing media microfiche, CD ROM, and magnetic tape, but in no event paper. Charges for secondary bills are as set forth in Attachment 1 of this Agreement. Notwithstanding any other provision of this subsection 4.2.7, until MCIm converts its billing system from a paper medium, it shall provide its bills only on paper.

4.2.8 Additional Copies. If either party requests an additional copy(ies) of a bill, such party shall pay the other party, at rates set forth in Attachment 1 of this Agreement, for such additional bill copy, unless such copy was requested due to errors, omissions, or corrections or the failure of the transmission to comply with the specifications set forth in this Agreement.

4.2.9 Electronic Bills. BellSouth will send Connectivity Bills to MCIm via CONNECT:Direct as the primary medium for delivery. BellSouth may elect, with agreement from MCIm, to deliver Connectivity Bills via secondary media, such as CD ROM, diskette, microfiche, or magnetic tape. To avoid transmission failures or the receipt of Connectivity Billing information that cannot be processed, MCIm shall provide BellSouth process specifications. BellSouth shall comply with MCIm's processing specifications when BellSouth transmits a Connectivity Bill to MCIm. MCIm shall provide to BellSouth notice if a Connectivity Billing transmission is received that does not meet MCIm's specifications. This transmission will be corrected and resubmitted to MCIm, at BellSouth's sole expense, in a form that can be processed. The payment due date for resubmitted transmissions will be thirty-five (35) days after the date that the transmission is received in a form that can be processed and that meets the specifications set forth in this Attachment.

4.2.9.1 BellSouth shall deliver to a location specified by MCIm, billing information via CONNECT:Direct, magnetic tape, CD ROM or microfiche.

4.2.10 Billing Cycle. Subject to the terms of this Section 4, including, but not limited to, subsection 4.2.12, each party shall pay the other party

within thirty (30) days from the issue date of the bill. If the payment due date is a Saturday, Sunday or has been designated a bank holiday, payment shall be made the next business day. In the event of an emergency, system failure or other such condition that prevents BellSouth from transmitting via CONNECT:Direct, BellSouth shall notify MCIm of such difficulties within forty-eight (48) hours of detection. BellSouth shall deliver to a location specified by MCIm, billing information via magnetic tape or paper, as agreed to by MCIm and BellSouth. The parties acknowledge that all tapes transmitted to the other party via U.S. Mail or Overnight Delivery and which contain Connectivity Billing data shall not be returned to the sending party.

4.2.11 Late Payment Charges. Amounts not paid within thirty (30) calendar days after the Bill Date are considered past due and subject to the following late payment provisions:

4.2.11.1 A late payment charge may be applied, if: (i) no payment is received by the billing Party; (ii) a partial payment of the amount due is received by the billing Party after the payment due date; or (iii) payment is received by the billing Party in funds that are not immediately available to the billing Party. The late payment factor will be an amount equal to the lesser of:

4.2.11.1.1 The highest interest rate that may be levied by law for commercial transactions, compounded daily for each day after the payment due date through and including the date the billed Party makes payment to the billing Party; or

4.2.11.1.1.1 For resale and unbundled network elements, 1.5 % per month of the unpaid balance;

4.2.11.1.1.2 For access and local interconnection, 0.00059%, compounded daily, of the amount due.

4.2.12 Billing Disputes. The disputing Party must document its claim to the other Party in writing. If the Parties are unable to resolve the dispute to their mutual satisfaction, either Party may file a complaint with the Commission/Board in accordance with the Commission's/Board's rules of procedure. For purposes of this Agreement, the Dispute Date is the date on which the disputing Party presents sufficient documentation to support a claim.

4.2.12.1 Each party agrees to notify the other party upon the discovery of a billing discrepancy "Notice of Discrepancy".

4.2.12.2 In the event of such Notice of Discrepancy, the parties shall use best efforts to resolve the discrepancy within one hundred twenty (120) calendar days notification using normal business procedures. If the discrepancy is disputed, resolution of such dispute is expected to occur at the first level of management resulting in a recommendation for settlement of the dispute and closure of a specific billing period.

4.2.12.3 Closure of a specific billing period shall occur by joint Agreement of the parties whereby the parties agree that such billing period is closed to any further analysis and financial transactions, except those resulting from an Audit. Closure shall take place within six (6) months of the Bill Date. The billing period being closed represents those Connectivity Charges that were billed or should have been billed by the respective Bill Date.

4.2.12.3.1 If the dispute is resolved in favor of billing Party and the disputing Party paid the disputed amount on or before the payment due date, no interest credits or late payment charges will apply to the disputed amounts.

4.2.12.3.2 If the dispute is resolved in favor of the billing Party and the disputing Party withheld the disputed amount, any payments withheld pending settlement will be subject to the late payment charge set forth in subsection 4.2.11, unless the billing party has failed to provide the billing information required by this Attachment.

4.2.12.3.3 If the dispute is resolved in favor of the disputing Party and the disputing Party paid the disputed amount, the disputing Party will receive a credit from the billing Party for the disputed amount plus interest at the rate set forth in subsection 4.2.11 of this Attachment.

4.2.12.4 If the dispute is not resolved within the allotted time frame, the following resolution procedure shall begin:

4.2.12.4.1 If the dispute is not resolved within sixty (60) days of the Notice of Discrepancy, the dispute shall be escalated to the second level of management for resolution.

4.2.12.4.2. If the dispute is not resolved within ninety (90) days of Notice of Discrepancy, the dispute shall be escalated to the third level of management for resolution

4.2.12.4.3 If the dispute is not resolved within one hundred and twenty (120) days of the Notice of Discrepancy, the dispute may be resolved pursuant to Section 22 (Dispute Resolution Procedures) of Part A of this Agreement.

4.2.12.5 Every Dispute Notification shall contain a unique tracking number assigned by the Party issuing the Dispute Notification. If the OBF adopts a guideline for documentation of a billing dispute, the Parties shall comply with such guideline and any other requirements agreed to by the Parties. Until such a guideline is adopted, sufficient documentation may consist of, but is not limited to, the following information, where the information is relevant to the dispute and available to the disputing Party:

4.2.12.5.1 The nature of the dispute (i.e., alleged incorrect rate, alleged incorrect minutes of use, etc.), including the basis for the disputing Party's belief that the bill is incorrect;

4.2.12.5.2 The type of usage (i.e., originating or terminating);

4.2.12.5.3 The end office where the minutes of use originated or terminated (if applicable);

4.2.12.5.4 The number of minutes in dispute;

4.2.12.5.5 The billing account number(s) (BANs);

4.2.12.5.6 The dollar amount in dispute;

4.2.12.5.7 The date of the Connectivity Bill(s) in question;

4.2.12.5.8 Circuit number or complete system identification and DS3 system identification if the dispute concerns a connecting facility assignment (CFA) on a DS1. Line number, trunk number and Two Six Code (TSC) may also be provided;

4.2.12.5.9 Purchase Order Number (PON) and dates involved (due date or as-of date) for disputes involving order activity and what the disputing Party believes is incorrect (e.g., non-recurring charge, mileage, circuit identification) and why it believes this to be incorrect (not received, not

ordered, incorrect rate, etc.). For order activity disputes, documentation may include traffic reports, billing cycle, and, if the service is shared, both main and shared service BANs. Line number, trunk number and Two Six Code as well as end-office identification may also be provided; or

4.2.12.5.10 Any other information necessary to facilitate dispute resolution. If additional information from the disputing Party would assist in resolving the dispute, the other Party may request that the disputing Party provide this information. The request for the additional information will not affect the Dispute Date established by this subsection 4.2.12.

4.2.12.6 The date of resolution will be the date on which the billing Party completes its investigation of the dispute, notifies the disputing Party of the disposition and, if the billing dispute is resolved in favor of the disputing Party, applies the credit for the amount of the dispute resolved in disputing Party's favor to the disputing Party's bill, including the interest on the disputed amount, as appropriate.

4.2.13 Each Party shall credit the other Party for incorrect Connectivity Billing charges including without limitation: overcharges, services ordered or requested but not delivered, interrupted services, services of poor quality; and installation problems if caused by the billing Party. Such credits shall be set forth in the appropriate Section of the Connectivity Bill pursuant to CABS BOS guidelines.

4.2.14 Recording. The Parties will record call information in accordance with this Section 4. Each Party will record call detail information associated with calls as follows:

4.2.14.1 For terminating interconnection minutes of use, each Party will calculate the terminating interconnection minutes of use based on standard Automatic Message Accounting ("AMA") recording made within each Party's network and use these recordings as the basis for its Connectivity Bills to the other Party.

4.2.14.2 The records described below will be provided at a Party's request and will be formatted pursuant to Section 5 of this Attachment, Bellcore (Telcordia)'s EMI standards, and the requirements of this Section 4. These records will be transmitted to the other Party daily in EMI format via CONNECT:Direct. BellSouth and MCIm will retain, at each Party's sole expense,

copies of all EMI records transmitted to the other Party for at least ninety (90) days after transmission to the other Party.

4.2.15 BellSouth shall be responsible for billing and collecting charges from IXCs for access related to interexchange calls generated by resale subscribers.

4.2.16 Data Quality. BellSouth agrees that if it transmits data to MCIm in a mechanized format, BellSouth shall also comply with the following specifications which are not contained in CABS BOS guidelines but which are necessary for MCIm to process Connectivity Billing information and data:

4.2.16.1 The Bill Date shall not contain spaces or non-numeric values.

4.2.16.2 Each Connectivity Bill must contain at least one detail record.

4.2.16.3 Any "From" Date should be less than the associated "Thru" Date and neither date can contain spaces.

4.2.16.4 The Invoice Number must not have embedded spaces or low values.

4.2.16.5 The BAN must not have any embedded spaces or low values.

4.2.17 At least thirty (30) days prior to any BellSouth software releases that affect the mechanized bill format, BellSouth shall send to MCIm Connectivity Bill data in the appropriate mechanized format for testing to ensure that the bills can be processed and that the bills comply with the requirements of CABS BOS guidelines. After the receipt of the test data from BellSouth, MCIm will notify BellSouth at least ten (10) days prior to the software implementation date of any processing problems as a result of the software changes. If the transmission fails to meet CABS BOS guidelines, BellSouth shall make the necessary corrections prior to implementation to meet such standards or guidelines.

4.2.18 Nonpayment.

4.2.18.1 Absent a good faith billing dispute, if payment of account is not received by the bill day in the month after the original bill

day, the billing Party may provide written notice to billed party, that additional applications for Service will be refused and that any pending orders for Service will not be completed if payment is not received by the fifteenth day following the date of the notice. In addition the billing Party may, at the same time, give thirty (30) days notice to the person designated by the billed Party to receive notices of noncompliance, and discontinue the provision of existing services to the billed Party at any time thereafter without further notice. Notwithstanding any other provision of this Agreement, BellSouth may deny, disconnect, discontinue, or refuse applications for, service only in those instances in which MCIm does not dispute the bill, and only for those services for which MCIm has not made payment; provided however, that in the event of a billing dispute, MCIm shall provide BellSouth with written documentation of the billing dispute which clearly shows the basis for MCIm's dispute of the charges. If the Parties are still unable to resolve the dispute, then the Parties may pursue all dispute resolution measures available under this Agreement.

4.2.18.2 In the case of such discontinuance, all billed charges, as well as applicable termination charges, shall become due.

4.2.18.3 If payment is not received or arrangements made for payment by the date given in the written notification, MCIm's services may be discontinued. Upon discontinuance of service on MCIm's account, service to MCIm's End Users will be denied. BellSouth will also reestablish service at the request of the End User or MCIm upon payment of the appropriate connection fee and subject to BellSouth's normal application procedures. MCIm is solely responsible for notifying the end user of the proposed disconnection of the service.

4.2.18.4 If within fifteen (15) days after an End User's service has been denied no contact has been made in reference to restoring service, the End User's service will be disconnected.

4.3 Billing Tapes

4.3.1 In emergency situations when tape transmittal has been used for billing tapes BellSouth shall adhere to the tape packaging requirements set forth in this Agreement. Where magnetic tape shipping containers are transported in freight compartments, adequate magnetic field protection shall be provided by keeping a 6-inch distance from any magnetic field generating device (except a magnetron-tape device). BellSouth shall only use those shipping containers that contain internal insulation to prevent damage. BellSouth shall clearly mark on the outside of each shipping

container its name, contact and return address. BellSouth shall not ship any Connectivity Billing tapes in tape canisters.

4.3.2 All emergency billing data transmitted via tape must be provided on a cartridge tape and must be of high quality, conform to the parties' record and label standards, 18-track, odd parity, 6,250 BPI group coded recording mode and extended binary-coded decimal interchange code ("EBCDIC"). Each reel of tape must be 100% tested at 20% or better "clipping" level with full width certification and permanent error free at final inspection. MCIm reserves the right to destroy a tape that has been determined to have unrecoverable errors. MCIm also reserves the right to replace a tape with one of equal or better quality.

4.3.3 Billing data tapes used in emergency circumstances shall have the following record and label standards. The dataset serial number on the first header record of an IBM standard tape label also shall have the following format.

	CABS BOS
Record Length	bytes (fixed length)
Blocking factor	records per block
Block size	bytes per block
Labels	Standard IBM Operating System

4.3.4 A single 6-digit serial number must appear on the external (flat) surface of the tape for visual identification. This number shall also appear in the "dataset serial number field" of the first header record of the IBM standard tape label. This serial number shall consist of the character "V" followed by the reporting location's four-digit Originating Company Code ("OCN") and a numeric character chosen by the sending company. The external and internal label shall be the same. The dataset name shall appear on the flat side of the reel and also in the "data set name field" on the first header record of the IBM standard tape label. BellSouth's name, address, and contact shall appear on the flat side of the cartridge or reel.

4.3.5 Tape labels shall conform to IBM OSNS Operating System Standards contained in the IBM Standard Labels Manual. IBM standard labels are 80-character records recorded in EBCDIC, odd parity.

4.3.6 BellSouth shall conform to the Standard Volume Label Format which will be prescribed by MCIm.

4.3.7 BellSouth shall use The IBM Standard Dataset Label Format which will be prescribed by MCIm.

4.3.8 BellSouth shall use mutually agreed upon test & production dataset formats.

4.3.9 The file format (block size, record size, etc.) will be mutually agreed upon by the parties.

4.3.10 MCIm will have no responsibility to return tapes delivered to MCIm.

4.4 Connectivity Billing and Recording Interface Performance and Management. Consistent with Attachment 10 of this Agreement, the Parties will comply with the performance measurements and reporting for transactions passed over the electronic Connectivity Billing and Recording interface.

Section 5. Customer Usage Data

5.1 Provision of Customer Usage Data

BellSouth shall provide to MCIm billing records in accordance with EMI standards, as established by the Ordering and Billing Forum (OBF). As such EMI standards or other OBF guidelines are modified, the parties agree to implement such new or modified standards within the time frames specified by OBF. BellSouth will provide all usage and billing records as specified by EMI guidelines in the Optional Daily Usage File, the Access Daily Usage File, and the Centralized Message Distribution System File as set forth below.

5.2 Optional Daily Usage File

5.2.1 Upon written request from MCIm, BellSouth will provide the Optional Daily Usage File (ODUF) service to MCIm pursuant to the terms and conditions set forth in this section.

5.2.2 MCIm shall furnish all relevant information required by BellSouth for the provision of the ODUF.

5.2.3 The Optional Daily Usage Feed will contain billable messages that were carried over the BellSouth Network and processed in the BellSouth Billing System, but billed to a MCIm customer.

5.2.4 Charges for delivery of the ODUF will appear on MCIm's' monthly bills. The charges are as set forth in Exhibit A to this Attachment.

5.2.5 The Optional Daily Usage Feed will contain both rated and unrated messages. All messages will be in the standard Alliance for Telecommunications Industry Solutions (ATIS) EMI record format.

5.2.6 Messages that error in the billing system of MCIm will be the responsibility of MCIm. If, however, MCIm should encounter significant volumes of errored messages that prevent processing by MCIm within its systems, BellSouth will work with MCIm to determine the source of the errors and the appropriate resolution.

5.2.7 The following specifications shall apply to the Optional Daily Usage Feed.

5.2.7.1 <u>USAGE TO BE TRANSMITTED</u>

5.2.7.1.1 The following messages recorded by BellSouth will be transmitted to MCIm:

- Message recording for per use/per activation type services (examples: Three -Way Calling, Verify, Interrupt, Call Return, etc.)

- Measured billable Local

- Directory Assistance messages

- IntraLATA Toll

- WATS and 800 Service

- N11

- Information Service Provider Messages

- Operator Services Messages

- Operator Services Message Attempted Calls (Network Element only)

- Credit/Cancel Records

- Usage for Voice Mail Message Service

5.2.7.1.2 Rated Incollects (originated in BellSouth and from other companies) can also be on ODUF. Rated Incollects will be intermingled with BellSouth recorded rated and unrated usage. Rated Incollects will not be packed separately.

5.2.7.1.3 BellSouth will perform duplicate record checks on records processed to ODUF. Any duplicate messages detected will be deleted and not sent to MCIm.

5.2.7.1.4 In the event that MCIm detects a duplicate on ODUF they receive from BellSouth, MCIm will drop the duplicate message (MCIm will not return the duplicate to BellSouth).

5.2.7.2 PHYSICAL FILE CHARACTERISTICS

5.2.7.2.1 ODUF will be distributed to MCIm via an agreed medium with CONNECT:Direct being the preferred transport method. The Daily Usage Feed will be a variable block format (2476) with an LRECL of 2472. The data on the Daily Usage Feed will be in a non-compacted EMI format (175 byte format plus modules). It will be created on a daily basis (Monday through Friday except holidays). Details such as dataset name and delivery schedule will be addressed during negotiations of the distribution medium. There will be a maximum of one dataset per workday per OCN.

5.2.7.2.2 Data circuits (private line or dial-up) may be required between BellSouth and MCIm for the purpose of data transmission. Where a dedicated line is required, MCIm will be responsible for ordering the circuit, overseeing its installation and coordinating the installation with BellSouth. MCIm will also be responsible for any charges associated with this line. Equipment required on the BellSouth end to attach the line to the mainframe computer and to transmit successfully ongoing will be negotiated on a case by case basis. Where a dial-up facility is required, dial circuits will be installed in the BellSouth data center by BellSouth and the associated charges assessed to MCIm. Additionally, all message

toll charges associated with the use of the dial circuit by MCIm will be the responsibility of MCIm. Associated equipment on the BellSouth end, including a modem, will be negotiated on a case by case basis between the Parties. All equipment, including modems and software, that is required on MCIm's end for the purpose of data transmission will be the responsibility of MCIm.

5.2.7.3 PACKING SPECIFICATIONS

5.2.7.3.1 A pack will contain a minimum of one message record or a maximum of 99,999 message records plus a pack header record and a pack trailer record. One transmission can contain a maximum of 99 packs and a minimum of one pack.

5.2.7.3.2 The OCN, From RAO, and Invoice Number will control the invoice sequencing. The From RAO will be used to identify to MCIm which BellSouth RAO that is sending the message. BellSouth and MCIm will use the invoice sequencing to control data exchange. BellSouth will be notified of sequence failures identified by MCIm and resend the data as appropriate.

THE DATA WILL BE PACKED USING ATIS EMI RECORDS.

5.2.7.4 PACK REJECTION

5.2.7.4.1 MCIm will notify BellSouth within one business day of rejected packs (via the mutually agreed medium). Packs could be rejected because of pack sequencing discrepancies or a critical edit failure on the Pack Header or Pack Trailer records (i.e. out-of-balance condition on grand totals, invalid data populated). Standard ATIS EMI Error Codes will be used. MCIm will not be required to return the actual rejected data to BellSouth. Rejected packs will be corrected and retransmitted to MCIm by BellSouth.

5.2.7.5 <u>Control Data</u>

5.2.7.5.1 MCIm will send one confirmation record per pack that is received from BellSouth. This confirmation record will indicate MCIm received the pack and the acceptance or rejection of the pack. Pack Status Code(s) will be populated using standard ATIS EMI error codes for packs that were rejected by MCIm for reasons stated in the above section.

5.2.7.6 TESTING

5.2.7.6.1 Upon request from MCIm, BellSouth shall send test files to MCIm for ODUF. The Parties agree to review and discuss the file's content and/or format. For testing of usage results, BellSouth shall request that MCIm set up a production (LIVE) file. The live test may consist of MCIm's employees making test calls for the types of services MCIm requests on ODUF. These test calls are logged by MCIm, and the logs are provided to BellSouth. These logs will be used to verify the files. Testing will be completed within 30 calendar days from the date on which the initial test file was sent.

5.3 Access Daily Usage File

5.3.1 Upon written request from MCIm, BellSouth will provide the Access Daily Usage File (ADUF) service to MCIm pursuant to the terms and conditions set forth in this section.

5.3.2 MCIm shall furnish all relevant information required by BellSouth for the provision of ADUF.

5.3.3 ADUF will contain access messages associated with a port that MCIm has purchased from BellSouth

5.3.4 Charges for delivery of ADUF will appear on MCIm's monthly bills. The charges are as set forth in Exhibit A to this Attachment. All messages will be in the standard ATIS EMI record format.

5.3.5 Messages that error in the billing system of MCIm will be the responsibility of MCIm. If, however, MCIm should encounter significant volumes of errored messages that prevent processing by MCIm within its systems, BellSouth will work with MCIm to determine the source of the errors and the appropriate resolution.

5.3.6 USAGE TO BE TRANSMITTED

5.3.6.1 The following messages recorded by BellSouth will be transmitted to MCIm:

5.3.6.1.1 Recorded originating and terminating interstate and intrastate access records associated with a port.

5.3.6.1.2 Recorded terminating access records for undetermined jurisdiction access records associated with a port.

5.3.6.2 When MCIm purchases Network Element ports from BellSouth and calls are made using these ports, BellSouth will handle the calls as follows:

5.3.6.2.1 Originating from Network Element and carried by Interexchange Carrier:

5.3.6.2.1.1 BellSouth will bill network element to MCIm and send access record to the MCIm via ADUF.

5.3.6.2.2 Originating from network element and carried by BellSouth.

5.3.6.2.2.1 BellSouth will bill network element to MCIm and send access record to the MCIm via ADUF.

5.3.6.2.3 Terminating on network element and carried by Interexchange Carrier:

5.3.6.2.3.1 BellSouth will bill network element to MCIm and send access record to MCIm.

5.3.6.2.4 Terminating on network element and carried by BellSouth:

5.2.6.2.4.1 BellSouth will bill network element to MCIm and send access record to MCIm.

5.3.6.3 BellSouth will perform duplicate record checks on records processed to ADUF. Any duplicate messages detected will be dropped and not sent to MCIm.

5.3.6.4 In the event that MCIm detects a duplicate on ADUF they receive from BellSouth, MCIm will drop the duplicate message (MCIm will not return the duplicate to BellSouth.)

5.3.7 <u>PHYSICAL FILE CHARACTERISTICS</u>

5.3.7.1 ADUF will be distributed to MCIm via an agreed medium with CONNECT:Direct being the preferred transport method. The Daily Usage Feed will be a fixed block format (2476) with an LRECL of 2472. The data on the Daily Usage Feed will be in a non-compacted EMI format (210 byte format plus modules). It will be created on a daily basis (Monday through Friday except holidays). Details such as dataset name and delivery schedule will

be addressed during negotiations of the distribution medium. There will be a maximum of one dataset per workday per OCN.

5.3.7.2 Data circuits (private line or dial-up) may be required between BellSouth and MCIm for the purpose of data transmission. Where a dedicated line is required, MCIm will be responsible for ordering the circuit, overseeing its installation and coordinating the installation with BellSouth. MCIm will also be responsible for any charges associated with this line. Equipment required on the BellSouth end to attach the line to the mainframe computer and to transmit successfully ongoing will be negotiated on a case by case basis. Where a dial-up facility is required, dial circuits will be installed in the BellSouth data center by BellSouth and the associated charges assessed to MCIm. Additionally, all message toll charges associated with the use of the dial circuit by MCIm will be the responsibility of MCIm. Associated equipment on the BellSouth end, including a modem, will be negotiated on a case by case basis between the Parties. All equipment, including modems and software, that is required on MCIm's end for the purpose of data transmission will be the responsibility of MCIm.

5.3.8 PACKING SPECIFICATIONS

5.3.8.1 A pack will contain a minimum of one message record or a maximum of 99,999 message records plus a pack header record and a pack trailer record. One transmission can contain a maximum of 99 packs and a minimum of one pack.

5.3.8.2 The OCN, From RAO, and Invoice Number will control the invoice sequencing. The From RAO will be used to identify to MCIm which BellSouth RAO is sending the message. BellSouth and MCIm will use the invoice sequencing to control data exchange. BellSouth will be notified of sequence failures identified by MCIm and resend the data as appropriate.

THE DATA WILL BE PACKED USING ATIS EMI RECORDS.

5.3.9 PACK REJECTION

5.3.9.1 MCIm will notify BellSouth within one business day of rejected packs (via the mutually agreed medium). Packs could be rejected because of pack sequencing discrepancies or a critical edit failure on the Pack Header or Pack Trailer records (i.e. out-of-balance condition on grand totals, invalid data populated). Standard ATIS EMI Error Codes will be used. MCIm will not be

required to return the actual rejected data to BellSouth. Rejected packs will be corrected and retransmitted to MCIm by BellSouth.

5.3.10 CONTROL DATA

5.3.10.1 MCIM WILL SEND ONE CONFIRMATION RECORD PER PACK THAT IS RECEIVED FROM BELLSOUTH. THIS CONFIRMATION RECORD WILL INDICATE MCIM RECEIVED THE PACK AND THE ACCEPTANCE OR REJECTION OF THE PACK. PACK STATUS CODE(S) WILL BE POPULATED USING STANDARD ATIS EMI ERROR CODES FOR PACKS THAT WERE REJECTED BY MCIM FOR REASONS STATED IN THE ABOVE SECTION.

5.3.11 TESTING

5.3.11.1 Upon request from MCIm, BellSouth shall send a test file of generic data to MCIm via Connect:Direct or Text File via E-Mail. The Parties agree to review and discuss the test file's content and/or format.

5.4 RAO Hosting

5.4.1 If MCIm requests that BellSouth act as the Regional Accounting Office ("RAO") host, then BellSouth will provide, as the RAO host, Calling Card and Third Number Settlement System (CATS) and Non-Intercompany Settlement System (NICS) services provided to MCIm by BellSouth will be in accordance with the methods and practices regularly adopted and applied by BellSouth to its own operations during the term of this Agreement, including such revisions as may be made from time to time by BellSouth.

5.4.2 MCIm shall furnish all relevant information required by BellSouth for the provision of RAO Hosting, CATS and NICS.

5.4.3 Applicable compensation amounts will be billed by BellSouth to MCIm on a monthly basis in arrears. Amounts due from one Party to the other (excluding adjustments) are payable within thirty (30) days of receipt of the billing statement.

5.4.4 MCIm must have its own unique RAO code. Requests for establishment of RAO status where BellSouth is the selected Centralized Message Distribution System (CMDS) interfacing host, require written notification from MCIm to the BellSouth RAO Hosting coordinator at least eight (8) weeks prior to the proposed

effective date. The proposed effective date will be mutually agreed upon between the Parties with consideration given to time necessary for the completion of required Telcordia (formerly BellCore) functions. BellSouth will request the assignment of an RAO code from its connecting contractor, currently Telcordia (formerly BellCore), on behalf of MCIm and will coordinate all associated conversion activities.

5.4.5 BellSouth will receive messages from MCIm that are to be processed by BellSouth, another LEC or CLEC in the BellSouth region or a LEC outside the BellSouth region.

5.4.6 BellSouth will perform invoice sequence checking, standard EMI format editing, and balancing of message data with the EMI trailer record counts on all data received from MCIm.

5.4.7 All data received from MCIm that is to be processed or billed by another LEC or CLEC within the BellSouth region will be distributed to that LEC or CLEC in accordance with the Agreement(s) which may be in effect between BellSouth and the involved LEC or CLEC.

5.4.8 All data received from MCIm that is to be placed on the CMDS network for distribution outside the BellSouth region will be handled in accordance with the agreement(s) which may be in effect between BellSouth and its connecting contractor (currently Telcordia (formerly BellCore)).

5.4.9 BellSouth will receive messages from the CMDS network that are destined to be processed by MCIm and will forward them to MCIm on a daily basis.

5.4.10 Transmission of message data between BellSouth and MCIm will be via CONNECT:Direct.

5.4.11 All messages and related data exchanged between BellSouth and MCIm will be formatted in accordance with accepted industry standards for EMI formatted records and packed between appropriate EMI header and trailer records, also in accordance with accepted industry standards.

5.4.12 MCIm will ensure that the recorded message detail necessary to recreate files provided to BellSouth will be maintained

for back-up purposes for a period of three (3) calendar months beyond the related message dates.

5.4.13 Should it become necessary for MCIm to send data to BellSouth more than sixty (60) days past the message date(s), MCIm will notify BellSouth in advance of the transmission of the data. If there will be impacts outside the BellSouth region, BellSouth will work with its connecting contractor and MCIm to notify all affected Parties.

5.4.14 In the event that data to be exchanged between the two Parties should become lost or destroyed, both Parties will work together to determine the source of the problem. Once the cause of the problem has been jointly determined and the responsible Party (BellSouth or MCIm) identified and agreed to, the company responsible for creating the data (BellSouth or MCIm) will make every effort to have the affected data restored and retransmitted. If the data cannot be retrieved, the responsible Party will be liable to the other Party for any resulting lost revenue. Lost revenue may be a combination of revenues that could not be billed to the end users and associated access revenues. Both Parties will work together to estimate the revenue amount based upon historical data through in accordance with section 5.2.10 of this Attachment. The resulting estimated revenue loss will be paid by the responsible Party to the other Party within three (3) calendar months of the date of problem resolution, or as mutually agreed upon by the Parties.

5.4.15 Should an error be detected by the EMI format edits performed by BellSouth on data received from MCIm, the entire pack containing the affected data will not be processed by BellSouth. BellSouth will notify MCIm of the error condition. MCIm will correct the error(s) and will resend the entire pack to BellSouth for processing. In the event that an out-of-sequence condition occurs on subsequent packs, MCIm will resend these packs to BellSouth after the pack containing the error has been successfully reprocessed by BellSouth.

5.4.16 In association with message distribution service, BellSouth will provide MCIm with associated intercompany settlements reports (CATS and NICS) as appropriate.

5.4.17 In no case shall either Party be liable to the other for any direct or consequential damages incurred as a result of the obligations set out in this Agreement.

5.4.18 RAO Compensation

5.4.18.1 Rates for message distribution service provided by BellSouth for MCIm are as set forth in Attachment 1 of this Agreement.

5.4.18.2 Rates for data transmission associated with message distribution service are as set forth in Attachment 1 of this Agreement.

5.4.18.4 Each Party will be responsible for all equipment, including modems and software, that is required on their side of the data circuit.

5.18.3 Data circuits (private line or dial-up) will be required between BellSouth and MCIm for the purpose of data transmission. Where a dedicated line is required, MCIm will be responsible for ordering the circuit, overseeing its installation and coordinating the installation with BellSouth. MCIm will also be responsible for any charges associated with this line. Equipment required on the BellSouth end to attach the line to the mainframe computer and to transmit successfully ongoing will be negotiated on a case by case basis. Where a dial-up facility is required, dial circuits will be installed in the BellSouth data center by BellSouth and the associated charges assessed to MCIm. Additionally, all message toll charges associated with the use of the dial circuit by MCIm will be the responsibility of MCIm. Associated equipment on the BellSouth end, including a modem, will be negotiated on a case by case basis between the Parties.

5.4.19 Intercompany Settlements Messages

5.4.19.1 This Section addresses the settlement of revenues associated with traffic originated from or billed by MCIm as a facilities based provider of local exchange telecommunications services outside the BellSouth region. Only traffic that originates in one Bell operating territory and bills in another Bell operating territory is included. Traffic that originates and bills within the same Bell operating territory will be settled on a local basis

between MCIm and the involved company(ies), unless that company is participating in NICS.

5.4.19.2 Both traffic that originates outside the BellSouth region by MCIm and is billed within the BellSouth region, and traffic that originates within the BellSouth region and is billed outside the BellSouth region by MCIm, is covered by this Agreement (CATS). Also covered is traffic that either is originated by or billed by MCIm, involves a company other than MCIm, qualifies for inclusion in the CATS settlement, and is not originated or billed within the BellSouth region (NICS).

5.4.19.3 Once MCIm is operating within the BellSouth territory, revenues associated with calls originated and billed within the BellSouth region will be settled via Telcordia (formerly BellCore)'s, its successor or assign, NICS system.

5.4.19.4 BellSouth will receive the monthly NICS reports from Telcordia (formerly BellCore), its successor or assign, on behalf of MCIm. BellSouth will distribute copies of these reports to MCIm on a monthly basis.

5.4.19.5 BellSouth will receive the monthly Calling Card and Third Number Settlement System (CATS) reports from Telcordia (formerly BellCore), its successor or assign, on behalf of MCIm. BellSouth will distribute copies of these reports to MCIm on a monthly basis.

5.4.19.6 BellSouth will collect the revenue earned by MCIm from the Bell operating company in whose territory the messages are billed (CATS), less a per message billing and collection fee as set forth in Attachment 1 of this Agreement, on behalf of MCIm. BellSouth will remit the revenue billed by MCIm to the Bell operating company in whose territory the messages originated, less a per message billing and collection fee as set forth in Attachment 1 of this Agreement, on behalf on MCIm. These two amounts will be netted together by BellSouth and the resulting charge or credit issued to MCIm via a monthly Carrier Access Billing System (CABS) miscellaneous bill.

5.4.19.7 BellSouth will collect the revenue earned by MCIm within the BellSouth territory from another CLEC also within the BellSouth territory (NICS) where the messages are billed, less a per message billing and collection fee as set forth in Attachment 1

of this Agreement, on behalf of MCIm. BellSouth will remit the revenue billed by MCIm within the BellSouth region to the CLEC also within the BellSouth region, where the messages originated, less a per message billing and collection fee as set forth in Attachment 1 of this Agreement. These two amounts will be netted together by BellSouth and the resulting charge or credit issued to MCIm via a monthly Carrier Access Billing System (CABS) miscellaneous bill.

5.4.19.8 BellSouth and MCIm agree that monthly netted amounts of less than fifty dollars ($50.00) will not be settled.

5.5 Lost Data

5.5.1. Loss of Recorded Usage Data - In the event MCIm Recorded Usage Data is determined to have been lost, damaged or destroyed as a result of an error or omission by BellSouth in its performance of the recording function , upon MCIm's request, BellSouth shall attempt to recover the Recorded Usage Data at no charge to MCIm. In the event the data cannot be recovered by BellSouth, BellSouth and MCIm shall mutually agree upon a credit amount based upon an estimate of the affected messages and associated revenue, reduced by a mutually agreed upon estimate of associated Recording Service charges, based upon the method described below. This method shall be applied on a consistent basis, subject to modifications agreed to by BellSouth and MCIm. This estimate shall be used to adjust amounts MCIm owes BellSouth for services BellSouth provides in conjunction with the provision of Recorded Usage Data, and BellSouth's liability for lost, damaged or destroyed Recorded Usage Data shall be limited to the application of the credit described in this section.

5.5.2. The lost revenue per day will be based upon the daily average of revenues for the corresponding days of the week (e.g. four Mondays) in the most recent month for which MCIm supplied data to BellSouth before the day of loss, except:

5.5.2.1. If the loss occurs on a weekday which is a holiday (except Mother's Day or Christmas), BellSouth will use the daily average of revenues from the four Sundays of the most recent month for which MCIm supplied data to BellSouth before the day of loss;

5.5.2.2. If the loss occurs on Mother's Day or Christmas, BellSouth will use the daily average of revenue from that day in the preceding year (if available from the data supplied by MCIm to BellSouth before the day of loss); and

5.5.2.3. If the loss occurs on a day not a holiday but one (or more) of the days lost is a holiday, BellSouth will use additional corresponding days from the next most recent month for which MCIm supplied data to BellSouth before the day of loss.

Section 6. Maintenance and Repair

6.1 Provision of Maintenance and Repair

6.1.1 BellSouth shall provide MCIm use of BellSouth's maintenance and repair OSS Function by providing MCIm the information, data, processes, and functionalities via an Application-to-Application interface as set forth in this Attachment. BellSouth shall maintain this interface, including, but not limited to, the data connections, at Parity.

6.1.2 The Application-to-Application interface referenced in subsection 6.1.1 above (Electronic Communications Trouble Administration, "ECTA") will allow MCIm personnel to perform the following functions for MCIm Customers: (i) enter trouble reports in the BellSouth maintenance systems for an MCIm Customer; (ii) retrieve and track current status on all MCIm Customer trouble reports entered via ECTA; (iii) receive "estimated time to repair" ("ETTR") on a Real Time basis; (iv) receive immediate notification in the event a repair person is unable to be present for, or anticipates missing, a scheduled repair appointment; (v) conduct metallic line or other tests at the same level as BellSouth trouble handling personnel; and (vi) receive automated notification of trouble closure in conformance with the specifications detailed in the MCIm Electronic Bonding Functional Requirements and Design document version 5.0 and the MCIm/BellSouth joint implementation agreement document.

6.1.3 BellSouth shall provide to MCIm maintenance and repair business processes, as well as the technical and systems maintenance and repair interfaces at Parity and on a nondiscriminatory basis. BellSouth shall comply with the applicable performance measurements set forth in Attachment 10, and as required by law.

6.1.3.1 Neither Party shall knowingly deploy or maintain any circuits, facilities or equipment that:

6.1.3.1.1 Interferes with or impairs service over any facilities of the other Party or a third party, in excess of interference or impairment explicitly permitted by Applicable Law or national standards;

6.1.3.1.2 Causes damage to the other Party's plant or collocation Premises;

6.1.3.1.3 Creates unreasonable hazards to any person;

6.1.3.1.4 Compromises the privacy of any communications, unless otherwise authorized by tariffs or Applicable Law.

6.1.3.2 Neither Party shall rearrange, move, disconnect, remove or attempt to repair any facilities owned by the other Party, other than by connection or disconnection to any interface means used, except with the consent of the other Party. Provided, however, that a Party discovering an immediate threat of serious physical damage to property or injury to person may take whatever measures that Party deems reasonably necessary to remove the threat.

6.1.3.3 Each Party shall notify the other of situations that arise that may result in a service problem for the other Party. If either Party reasonably determines that any equipment or facilities of the other Party violates the provisions of subsection 6.1.3.1, the determining Party shall give written notice to the other Party, which notice shall direct the other Party to cure the violation within 48 hours. After receipt of the notice, the Parties agree to consult immediately and, if necessary, to inspect the arrangement. If the Parties determine that the violation cannot be cured within 48 hours, at a minimum the curing Party shall commence curative measures within 24 hours and exercise reasonable diligence to complete such measures as soon as possible thereafter.

6.1.3.4 For all repair requests, each Party shall prescreen troubles prior to referring the trouble to the other Party.

6.1.3.5 Each Party may bill the other Party for referring a trouble that requires a dispatch outside of the central office and is found not to be in the network of the Party to whom the trouble was referred, pursuant to its standard time and material charges. The standard time and material charges will be no more than what the Party normally would charge for the same services.

6.1.4 BellSouth's repair bureau shall conform to the performance requirements set forth in this Attachment when providing maintenance and repair services to MCIm.

6.1.4.1 BellSouth shall provide MCIm with the capability to open trouble tickets, analyze and sectionalize the trouble, determine whether it is necessary to dispatch a service technician to the relevant premises, obtain status, and receive completion information. BellSouth shall handle MCIm troubles at Parity and shall not require MCIm technicians to perform any task beyond the metallic line testing required to isolate troubles within BellSouth's network. BellSouth shall provide electronically bonded access to MCIm to perform the metallic line testing.

6.1.4.2 If BellSouth misses the "estimated time to restore", BellSouth shall use its best efforts to notify MCIm in a timely manner.

6.1.4.3 Telephone Service Priority. Upon receipt of a request from MCIm containing the appropriate TSP Authorization Codes assigned by the NSEP-TSP, BellSouth shall identify the account with this code. BellSouth will conform to the framework defined by the NSEP-TSP for restoration on a priority basis of the individual accounts.

6.1.4.4 BellSouth will make repair service available to MCIm personnel 24 hours a day, seven (7) days a week.

6.2 General Business Requirements and Functions

6.2.1 Each Party will be the single point of contact for all repair calls on behalf of its End Users. The Parties agree to provide one another with toll-free contact numbers for such purposes.

6.2.2 BellSouth shall dispatch maintenance personnel for MCIm Customers on the same schedule that BellSouth provides for its own Customers. BellSouth shall dispatch BellSouth technicians to MCIm-designated premises upon request by MCIm.

6.2.3 MCIm shall handle all interactions with MCIm subscribers including all calls regarding service problems, establishing appointments pursuant to this Section, and notifying the subscriber of trouble status and resolution, unless otherwise authorized by MCIm. BellSouth may contact

MCIm End Users for the express purpose of performing routine maintenance on BellSouth's network (e.g., to notify an End User of tree trimming operations).

6.2.4 Where BellSouth provides the switching, BellSouth agrees to provide scheduled maintenance for residential and small business subscribers, consisting of cable throws, performed with test sets which prevent the subscribers' services from being interrupted during the activity. BellSouth shall monitor individual cutover work to insure that the service is not in use prior to the cut. Central office conversions shall be publicized through the media and will occur after midnight and before 4:00A.M, unless MCIm is notified in writing (via e-mail or other medium and via web posting).

6.2.5 BellSouth shall provide MCIm with the same scheduled and non-scheduled maintenance including, without limitation, required and recommended maintenance intervals and procedures, for all Services provided to MCIm under this Agreement that it currently provides for maintenance of its own network at a level of quality which is at Parity.

6.2.6 Disaster Recovery. The Parties shall adhere to the Disaster Recovery Plan set forth in Appendix 1 of this Attachment.

6.2.7 Adverse Trend Analysis. BellSouth will work cooperatively with MCIm to identify the source of, and correct, adverse trends identified through the performance measurements set forth in Attachment 10 of this Agreement. BellSouth will report to MCIm the cause for the adverse trend and BellSouth's measures to correct the same. For trends that are not corrected, MCIm may request, and BellSouth shall perform, at Parity, a root cause analysis on the trend, and provide the details of that analysis to MCIm.

6.2.8 BellSouth shall supply MCIm with a unique number, which may be the customer's actual number, to identify each MCIm initial trouble report opened. For repeat trouble reports, if the previous trouble was within a thirty (30) day period, the report will be flagged as a repeat report automatically.

6.2.9 Where BellSouth provides switching, MCIm may request, and BellSouth shall provide, selective call routing, at the rates set forth in Attachment 1 of this Agreement, that will enable MCIm subscriber calls to "611" to be routed to the MCIm repair center.

6.2.10 MCIm may open a trouble report at any time for any circuit ID for which BellSouth has previously submitted a completion notice for a service request. In addition, MCIm may open a trouble report where a previous report for the same circuit ID has been closed by BellSouth. MCIm may escalate to BellSouth to the last level of escalation occurring on the closed report.

6.2.11 BellSouth shall notify MCIm upon completion of a trouble report. The report shall not be closed until the trouble is resolved and notification is received by MCIm.

6.2.12 BellSouth shall permit MCIm to call BellSouth to verify central office features and functions as they relate to an open trouble report. BellSouth agrees to work with MCIm on the initial trouble report to isolate the cause of the trouble and, where possible, resolve the feature/function related trouble at that time.

6.2.13 BellSouth shall proactively advise MCIm of any central office, interoffice (such as fiber cuts), and repeater failures that are known at the time of any inquiry or trouble report. BellSouth shall notify MCIm of switch failures pursuant to the Disaster Recovery Plan in Appendix 1 of this Attachment.

6.2.14 BellSouth agrees to provide an Estimated Time To Repair (ETTR), an appointment time or commitment time, as appropriate, on all trouble reports.

6.2.15 Maintenance charges for premises visits by BellSouth employees or contractors shall be billed to MCIm and not to the customer.

6.2.15.1 BellSouth employees or contractors shall present the customer with an unbranded form detailing the time spent, the materials used and an indication that the trouble has either been resolved, or that additional work will be necessary.

6.2.15.2 If additional premises work is required that cannot be performed on that visit, BellSouth shall call MCIm to schedule another premises visit. Wherever possible, BellSouth will schedule appointments while a technician is at the premises with the Customer on the line so that MCIm can schedule a new appointment with BellSouth and Customer at the same time.

6.2.15.3 The BellSouth employees or contractors who perform maintenance and repair shall obtain the Customer's signature on a form, and use the signed form to input maintenance charges into the BellSouth repair and maintenance database. These charges will include any charges for inside wiring work by BellSouth employees or contractors.

APPENDIX 1
ATTACHMENT 8

1999
BELLSOUTH

DISASTER RECOVERY PLANNING

for

CLECS

April 7, 2000

CONTENTS

PAGE

1.0 Purpose …….. 3
2.0 Single Point of Contact…….. 3
3.0 Identifying the Problem…….. 3
3.1 Site Control…….. 4
3.2 Environmental Concerns……. 5
4.0 The Emergency Control Center (ECC)……... 6
5.0 Recovery Procedures…….. 6
5.1 CLEC Outage…….. 7
5.2 BellSouth Outage……. 7
5.3 Combined Outage (CLEC and BellSouth Equipment)……... 10
6.0 T1 Identification Procedures……... 10
7.0 Acronyms……. 11

1.0 PURPOSE

In the unlikely event of a disaster occurring that affects BellSouth's long-term ability to deliver traffic to a Competitive Local Exchange Carrier (CLEC), general procedures have been developed to hasten the recovery process. Since each location is different and could be affected by an assortment of potential problems, a detailed recovery plan is impractical. However, in the process of reviewing recovery activities for specific locations, some basic procedures emerge that appear to be common in most cases.

These general procedures should apply to any disaster that affects the delivery of traffic for an extended time period. Each CLEC will be given the same parity consideration during an outage and service will be restored as quickly as possible.

This document will cover the basic recovery procedures that would apply to every CLEC.

2.0 SINGLE POINT OF CONTACT

When a problem is experienced, regardless of the severity, the BellSouth Network Management Center (NMC) will observe traffic anomalies and begin monitoring the situation. Controls will be appropriately applied to insure the sanity of BellSouth's network; and, in the event that a switch or facility node is lost, the NMC will attempt to circumvent the failure using available reroutes.

BellSouth's NMC will remain in control of the restoration efforts until the problem has been identified as being a long-term outage. At that time, the NMC will contact BellSouth's Emergency Control Center (ECC) and relinquish control of the recovery efforts. Even though the ECC may take charge of the situation, the NMC will continue to monitor the circumstances and restore traffic as soon as damaged network elements are revitalized.

The telephone number for the BellSouth Network Management Center in Atlanta, as published in Telcordia's National Network Management Directory, is 404-321-2516. The telephone number for MCI Worldcom Local Switch Control Center, is 1-888-722-9266.

3.0 IDENTIFYING THE PROBLEM

During the early stages of problem detection, the NMC will be able to tell which CLECs are affected by the catastrophe. Further analysis and/or first hand observation will determine if the disaster has affected CLEC equipment only; BellSouth equipment only or a combination. The initial restoration activity will be largely determined by the equipment that is affected.

Once the nature of the disaster is determined and after verifying the cause of the problem, the NMC will initiate reroutes and/or transfers that are jointly agreed upon by the affected CLECs' Network Management Center and the BellSouth NMC. The type and percentage of controls used will depend upon available network capacity. Controls necessary to stabilize the situation will be invoked and the NMC will attempt to re-establish as much traffic as possible.

For long term outages, recovery efforts will be coordinated by the Emergency Control Center (ECC). Traffic controls will continue to be applied by the NMC until facilities are re-established. As equipment is made available for service, the ECC will instruct the NMC to begin removing the controls and allow traffic to resume.

3.1 SITE CONTROL

In the total loss of building-use scenario, what likely exists will be a smoking pile of rubble. This rubble will contain many components which could be dangerous. It could also contain any personnel on the premises at the time of the disaster. For these reasons, the local fire marshal with the assistance of the police will control the site until the building is no longer a threat to surrounding properties and the companies have secured the site from the general public.

During this time, the majority owner of the building should be arranging for a demolition contractor to mobilize to the site with the primary objective of reaching the cable entrance facility for a damage assessment. The results of this assessment would then dictate immediate plans for restoration, both short term and permanent.

In a less catastrophic event, i.e., the building is still standing and the cable entrance facility is usable, the situation is more complex. The site will initially be controlled by local authorities until the threat to adjacent property has diminished. Once the site is returned to the control of the companies, the following events should occur:

An initial assessment of the main building infrastructure systems (mechanical, electrical, fire & life safety, elevators, and others) will establish building needs. Once these needs are determined, the majority owner should lead the building restoration efforts. There may be situations where the site will not be totally restored within the confines of the building. The companies must individually determine their needs and jointly assess the cost of permanent restoration to determine the overall plan of action.

Multiple restoration trailers from each company will result in the need for designated space and installation order. This layout and control is required to maximize the amount of restoration equipment that can be placed at the site, and the priority of placements.

Care must be taken in this planning to insure other restoration efforts have logistical access to the building. Major components of telephone and building equipment will need to be removed and replaced. A priority for this equipment must also be jointly established to facilitate overall site restoration. (Example: If the AC switchgear has sustained damage, this would be of the highest priority in order to regain power, lighting, and HVAC throughout the building.)

If the site will not accommodate the required restoration equipment, the companies would then need to quickly arrange with local authorities for street closures, rights of way or other possible options available.

3.2 ENVIRONMENTAL CONCERNS

In the worse case scenario, many environmental concerns must be addressed. Along with the police and fire marshal, the state environmental protection department will be on site to monitor the situation.

Items to be concerned with in a large central office building could include:

1. Emergency engine fuel supply. Damage to the standby equipment and the fuel handling equipment could have created "spill" conditions that have to be handled within state and federal regulations.

2. Asbestos containing materials that may be spread throughout the wreckage. Asbestos could be in many components of building, electrical, mechanical, outside plant distribution, and telephone systems.

3. Lead and acid. These materials could be present in potentially large quantities depending upon the extent of damage to the power room.

4. Mercury and other regulated compounds resident in telephone equipment.

5. Other compounds produced by the fire or heat.

Once a total loss event occurs at a large site, local authorities will control immediate clean up (water placed on the wreckage by the fire department) and site access.

At some point, the companies will become involved with local authorities in the overall planning associated with site clean up and restoration. Depending on the clean up approach taken, delays in the restoration of several hours to several days may occur.

In a less severe disaster, items listed above are more defined and can be addressed individually depending on the damage.

In each case, the majority owner should coordinate building and environmental restoration as well as maintain proper planning and site control.

4.0 THE EMERGENCY CONTROL CENTER (ECC)

The ECC is located in the Colonnade Building in Birmingham, Alabama. During an emergency, the ECC staff will convene a group of pre-selected experts to inventory the damage and initiate corrective actions. These experts have regional access to BellSouth's personnel and equipment and will assume control of the restoration activity anywhere in the nine-state area.

In the past, the ECC has been involved with restoration activities resulting from hurricanes, ice storms and floods. They have demonstrated their capabilities during these calamities as well as during outages caused by human error or equipment failures. This group has an excellent record of restoring service as quickly as possible.

During a major disaster, the ECC may move emergency equipment to the affected location, direct recovery efforts of local personnel and coordinate service restoration activities with the CLECs. The ECC will attempt to restore service as quickly as possible using whatever means are available; leaving permanent solutions, such as the replacement of damaged buildings or equipment, for local personnel to administer.

Part of the ECC's responsibility, after temporary equipment is in place, is to support the NMC efforts to return service to the CLECs. Once service has been restored, the ECC will return control of the network to normal operational organizations. Any long-term changes required after service is restored will be made in an orderly fashion and will be conducted as normal activity.

5.0 RECOVERY PROCEDURES.

The nature and severity of any disaster will influence the recovery procedures. One crucial factor in determining how BellSouth will proceed with restoration is whether or

not BellSouth's equipment is incapacitated. Regardless of who's equipment is out of service, BellSouth will move as quickly as possible to aid with service recovery; however, the approach that will be taken may differ depending upon the location of the problem.

5.1 CLEC OUTAGE.

For a problem limited to one CLEC (or a building with multiple CLECs), BellSouth has several options available for restoring service quickly. For those CLECs that have agreements with other CLECs, BellSouth can immediately start directing traffic to a provisional CLEC for completion. This alternative is dependent upon BellSouth having concurrence from the affected CLECs.

Whether or not the affected CLECs have requested a traffic transfer to another CLEC will not impact BellSouth's resolve to re-establish traffic to the original destination as quickly as possible.

5.2 BELLSOUTH OUTAGE

Because BellSouth's equipment has varying degrees of impact on the service provided to the CLECs, restoring service from damaged BellSouth equipment is different. The outage will probably impact a number of Carriers simultaneously. However, the ECC will be able to initiate immediate actions to correct the problem.

A disaster involving any of BellSouth's equipment locations could impact the CLECs, some more than others. A disaster at a Central Office (CO) would only impact the delivery of traffic to and from that one location, but the incident could affect many Carriers. If the Central Office is a Serving Wire Center (SWC), then traffic from the entire area to those Carriers served from that switch would also be impacted. If the switch functions as an Access Tandem, or there is a tandem in the building, traffic from every CO to every CLEC could be interrupted. A disaster that destroys a facility hub could disrupt various traffic flows, even though the switching equipment may be unaffected.

The NMC would be the first group to observe a problem involving BellSouth's equipment. Shortly after a disaster, the NMC will begin applying controls and finding reroutes for the completion of as much traffic as possible. These reroutes may involve delivering traffic to alternate Carriers upon receiving approval from affected carriers and notification of the CLECs involved. In some cases, changes in translations will be

required. If the outage is caused by the destruction of equipment, then the ECC will assume control of the restoration.

5.2.1 Loss of a Central Office

When BellSouth loses a Central Office, the ECC will

a) place specialists and emergency equipment on notice;

b) inventory the damage to determine what equipment and/or functions are lost;

c) move containerized emergency equipment and facility equipment to the stricken area, if necessary;

d) begin reconnecting service for Hospitals, Police and other emergency agency customers of CLECs and BellSouth in a nondiscriminatory manner in accordance with NSEP-TSP guidelines; and

e) begin restoring service to CLECs and other customers.

5.2.2 Loss of a Central Office with Serving Wire Center Functions

The loss of a Central Office that also serves as a Serving Wire Center (SWC), will be restored as described in subsection 5.2.1.

5.2.3 Loss of a Central Office with Tandem Functions

When BellSouth loses a Central Office building that serves as an Access Tandem and as a SWC, the ECC will

a) place specialists and emergency equipment on notice;

b) inventory the damage to determine what equipment and/or functions are lost;

c) move containerized emergency equipment and facility equipment to the stricken area, if necessary;

d) begin reconnecting service for Hospitals, Police and other emergency agency customers of CLECs and BellSouth in a nondiscriminatory manner in accordance with NSEP-TSP guidelines; and

e) redirect as much traffic as possible to the alternate access tandem (if available) for delivery to those CLECs utilizing a different location as a SWC;

f) begin aggregating traffic to a location near the damaged building. From this location, begin re-establishing trunk groups to the CLECs for the delivery of traffic normally found on the direct trunk groups. (This aggregation point may be the alternate access tandem location or another CO on a primary facility route.)

g) begin restoring service to CLECs and other customers.

5.2.4 Loss of a Facility Hub

In the event that BellSouth loses a facility hub, the recovery process is much the same as above. Once the NMC has observed the problem and administered the appropriate controls, the ECC will assume authority for the repairs. The recovery effort will include

a) placing specialists and emergency equipment on notice;

b) inventorying the damage to determine what equipment and/or functions are lost;

c) moving containerized emergency equipment to the stricken area, if necessary;

d) reconnecting service for Hospitals, Police and other emergency agency customers of CLECs and BellSouth in a nondiscriminatory manner in accordance with NSEP-TSP guidelines; and

e) restoring service to CLECs and other customers. If necessary, BellSouth will aggregate the traffic at another location and build temporary facilities. This alternative would be viable for a location that is destroyed and building repairs are required.

5.3 COMBINED OUTAGE (CLEC AND BELLSOUTH EQUIPMENT)

In some instances, a disaster may impact BellSouth's equipment as well as the CLECs'. This situation will be handled in much the same way as described in subsection 5.2.3 above. Since BellSouth and the CLECs will be utilizing temporary equipment, close coordination will be required.

6.0 T1 IDENTIFICATION PROCEDURES

During the restoration of service after a disaster, BellSouth may be forced to aggregate traffic for delivery to a CLEC. During this process, T1 traffic may be consolidated onto DS3s and may become unidentifiable to the Carrier. Because resources will be limited,

BellSouth may be forced to "package" this traffic entirely differently then normally received by the CLECs. Therefore, a method for identifying the T1 traffic on the DS3s and providing the information to the Carriers is required.

7.0 ACRONYMS.

CO - Central Office (BellSouth)

DS3 - Facility that carries 28 T1s (672 circuits)

ECC - Emergency Control Center (BellSouth)

CLEC - Competitive Local Exchange Carrier

NMC - Network Management Center

SWC - Serving Wire Center (BellSouth switch)

T1 - Facility that carries 24 circuits

TABLE OF CONTENTS

Attachment 9
ANCILLARY SERVICES

SECTION 1. BASIC 911/E911 2

SECTION 2. OPERATOR CALL PROCESSING 10

SECTION 3. DIRECTORY ASSISTANCE ("DA") 19

SECTION 4. DIRECTORY LISTINGS ("DL") 23

ATTACHMENT 9
ANCILLARY SERVICES

Section 1. Basic 911/E911

1.1. Basic 911 and E911 General Requirements.

1.1.1. BellSouth shall provide MCIm with access to 911 and E911.

1.1.2. Basic 911 and E911 provides a caller access to the appropriate emergency service bureau by dialing a 3-digit universal telephone number (911). Basic 911 and E911 access from Local Switching shall be provided to MCIm in accordance with the following:

1.1.3 E911 shall provide additional routing flexibility for 911 calls. E911 shall use subscriber data, contained in the Automatic Location Identification/Data Base Management System (ALI/DBMS) and the E911 tandem switch, to determine to which Public Safety Answering Point (PSAP) to route the call.

1.1.4 If BellSouth develops and makes available to its customers any other type of 911 service (e.g., advanced intelligent network 911) BellSouth shall make such service available to MCIm at rates that will be negotiated at the time the service is made available.

1.1.5 BellSouth shall provide to MCIm, where available, the emergency public agency (e.g. police, fire, rescue, poison, and bomb) telephone numbers linked to all NPA NXXs for the states in which they provide service. Such information shall be used solely for purposes of handling emergency calls.

1.1.6 BellSouth shall use its best efforts to provide to MCIm all changes, alterations, modifications, and updates to the emergency public agency (e.g., police, fire, rescue, poison, and bomb) telephone numbers linked to all NPA NXX's as soon as such changes occur. BellSouth shall provide such information at Parity.

1.1.7 Basic 911 and E911 functions provided to MCIm shall be at least at parity with the support and services that BellSouth provides to its subscribers for such similar functionality.

1.1.8 Descriptions, signaling, trunking and ordering interfaces for 911/E911 are set forth in this Agreement.

1.2. Basic 911 and E911 Access from Local Switching

1.2.1 Basic 911 and E911 access from Local Switching shall be provided to MCIm in accordance with the following:

1.2.1.1 The Parties shall comply with all applicable laws and regulations concerning emergency services.

1.2.1.2 For E911, BellSouth shall receive data from MCIm electronically. An ALI/DBMS discrepancy report listing errors detected by BellSouth will be faxed to MCIm promptly. MCIm will transmit daily update files for “batch” processing within twenty-four (24) hours of receipt of a fax transmission of errors.

1.2.2 In government jurisdictions where BellSouth has obligations under existing agreements as the primary provider of the 911 Service to the county, MCIm shall participate in the provision of the 911 Service as follows:

1.2.2.1 Each party shall be responsible for those network portions of the 911 Service for which it has control, including any necessary maintenance to each party’s portion of the 911 Service.

1.2.2.2 Where BellSouth is the host Telco, BellSouth shall be responsible for maintaining the E-911 database including validating MCIm updates against the Master Street Address Guide (“MSAG”) and posting valid updates to E911 database. Errors will be returned to MCIm for correction and transmission of valid updates.

1.2.2.3 MCIm may verify the accuracy of information regarding MCIm Customers in the ALI/DBMS database using methods and procedures mutually agreed to by the Parties.

1.2.3 If a third party is the primary service provider to a government agency, MCIm shall negotiate separately with such third party with regard to the provision of 911 service to the agency. All relations between such third party and MCIm are totally separate from this Agreement and BellSouth makes no representations on behalf of the third party.

1.2.4 If MCIm or its Affiliate is the primary service provider to a government agency, MCIm and BellSouth shall negotiate the specific provisions necessary for providing 911 service to the agency and shall include such provisions in an amendment to this Agreement.

1.2.5 BellSouth shall comply with established, competitively neutral intervals for installation of facilities, including any collocation facilities, diversity requirements, etc.

1.2.5.1 BellSouth shall update the ALI/DBMS Database with MCIm data in an interval no less than is experienced by BellSouth subscribers, or than for other carriers, whichever is faster, at no additional cost.

1.2.6 BellSouth shall provide to MCIm, at the rates set forth in Attachment 1 of this Agreement, the necessary Network Elements and services in order for MCIm to provide E911/911 services to governmental agencies in accordance with the requirements of this Agreement.

1.3 Basic 911 and E911 Database Requirements

1.3.1 The telephone number ("TN") data is managed in ALI/DBMS by BellSouth, but the responsibility for providing the data resides with each Local Service Provider.

1.3.2 Copies of the MSAG shall be provided within ten (10) business days from the time requested and provided on CD-ROM or such other medium as the Parties may agree.

1.3.3 MCIm shall be solely responsible for providing MCIm database records to BellSouth for inclusion in BellSouth's ALI/DBMS database on a timely basis.

1.3.4 BellSouth and MCIm shall arrange for the automated input and periodic updating of the E911 database information related to MCIm End Users as stated in the BellSouth E911 Local Exchange Carrier Guide for

Facility Based Providers. BellSouth shall work cooperatively with MCIm to ensure the accuracy of the data transfer by verifying it against MSAG.

1.3.5 MCIm shall assign an E911 database coordinator charged with the responsibility of forwarding MCIm end user ALI/DBMS record information to BellSouth or via a third-party entity, charged with the responsibility of ALI/DBMS record transfer. MCIm assumes all responsibility for the accuracy of the data that MCIm provides to BellSouth.

1.3.6 Automatic Location Identification/Data Base Management System (ALI/DBMS). The ALI/DBMS Database contains subscriber information (including name, address, telephone information, and sometimes special information from the local service provider or subscriber) used to determine to which Public Safety Answering Point (PSAP) to route the call. The ALI/DBMS database is used to provide more routing flexibility for E911 calls than Basic 911. This subsection 1.3.6 supplements the requirements for SCPs/Databases set forth in the technical references in Attachment 3, Appendix 1 of this Agreement. BellSouth shall provide the Emergency Services Database in accordance with the following:

1.3.6.1 Technical Requirements

1.3.6.1.1 BellSouth shall provide error reports from the ALI/DBMS database to MCIm after MCIm inputs information into the ALI/DBMS database. Where BellSouth provides local switching or resold services to MCIm, MCIm may utilize BellSouth to enter through the service order process subscriber information into the database on a demand basis, and validate subscriber information on a demand basis. With either ALI/DBMS update method, BellSouth shall provide the ability for MCIm to update ALI/DBMS database with End User information for lines that have been ported via INP or LNP.

1.3.6.1.2 The ALI/DBMS database shall contain the following subscriber information:

1.3.6.1.2.1 Name;

1.3.6.1.2.2 Address;

1.3.6.1.2.3 Telephone number; and

1.3.6.1.2.4 Other information as BellSouth deems appropriate

1.3.6.1.3 When BellSouth is responsible for administering the ALI/DBMS database in its entirety, ported number NXXs entries for the ported numbers should be maintained unless MCIm requests otherwise and shall be updated if MCIm requests.

1.3.6.1.4 When Remote Call Forwarding (RCF) is used to provide number portability to the local subscriber and a remark or other appropriate field information is available in the database, the shadow or "forwarded-to" number and an indication that the number is ported shall be added to the ALI/DBMS database by the Party that enters subscriber information into the database for that subscriber.

1.3.6.1.5 MCIm's End User records will be updated in the ALI/DBMS via the ALI/DBMS electronic interface. The ALI/DBMS and selective router databases will be subsequently updated via the ALI/DBMS once MCIm's End User records are updated in the ALI/DBMS. The ALI/DBMS will send completion information back to the electronic interface for retrieval by MCIm.

1.3.6.2 Interface Requirements

1.3.6.2.1 The interface between the E911 Switch or Tandem and the ALI/DBMS database for MCIm subscribers shall meet industry standards.

1.3.6.2.2 <u>911 Trunking Arrangements</u>

1.3.6.2.2.1 The Parties agree to provide access to 911/E911 in a manner that is transparent to the Customer. The Parties will work together to facilitate the prompt, reliable and efficient Interconnection of MCIm's systems to BellSouth's 911/E911 platforms, with a level of performance that will provide at least the same grade of service as that which BellSouth provides to itself, its Customers, subsidiaries, Affiliates or any other third parties.

1.3.6.2.2.2 MCIm shall order, and BellSouth shall provision, a minimum of two dedicated one-way trunks with either MF or SS7 signaling, as available, at the DS-0 level (at a

minimum), from MCIm's Central Office to each BellSouth 911/E911 selective router (e.g., 911 Tandem Office) that serves the areas in which MCIm provides Exchange Service, for the provision of 911/E911 services and for access to all subtending PSAPs ("911 Interconnection Trunk Groups").

1.3.6.2.2.3 All 911 trunks must be capable of transmitting and receiving Baudot code necessary to support the use of Telecommunications Devices for the Deaf (TTY/TDDs).

1.3.6.2.2.4 At MCIm's request, BellSouth shall receive MCIm CAMA-ANI (Centralized Automatic Message Accounting - Automatic Number identification) traffic destined to the 911 PSAPs, or E911 tandems, on trunks from an MCIm end-office.

1.3.6.2.2.5 If and when SS7 signaling on 911 trunks is being provided by BellSouth, at MCIm's request, BellSouth shall receive MCIm SS7 traffic destined to any BellSouth 911 tandem on trunks from an MCIm end-office.

1.3.6.2.2.6 Diversity between BellSouth's 911 tandem and the PSAP will be maintained or upgraded and provided to MCIm to utilize the highest level of diversity available in the network equal to that which BellSouth provides to itself, its Customers, subsidiaries, Affiliates or any other third parties.

1.3.6.2.2.7 Where there is an alternate means of transmitting a 911/E911 call to a PSAP in the event of failures, BellSouth shall make that alternate means available to MCIm.

1.3.6.2.2.8 BellSouth shall route E911 calls received from MCIm's switching office to the appropriate PSAP, and forward the subscriber's ANI to the PSAP.

1.3.6.2.2.9 BellSouth shall provide for overflow of MCIm's 911 traffic at Parity and as directed by the PSAP.

1.3.6.2.2.10 BellSouth shall provide E911 Tandem boundary documentation to MCIm. Documentation shows the boundary around the outside of the set of exchange areas served by that E911 Tandem. The documentation provides MCIm the information necessary to set up its

network to route E911 callers to the correct E911 Tandem. BellSouth shall provide MCIm updates to the documentation as this information changes.

1.3.6.2.2.11 Equipment and circuits used for 911 shall be monitored for MCIm in the same manner as BellSouth provides for itself.

1.3.6.2.2.12 BellSouth shall provide restoration and repair of E911/911 trunks or network outages on the same terms/conditions it provides itself.

1.3.6.2.2.13 Nothing in this Agreement shall prohibit MCIm from arranging with the PSAP to have direct trunking between its network and the PSAP.

1.3.7 If BellSouth establishes multiple ALI/DBMS databases that cover different geographic areas, BellSouth shall identify which states, counties or parts thereof are covered by which ALI/DBMS databases, and identify and communicate a point of contact for each.

1.3.8 MCIm shall provide information on new subscribers to BellSouth within one (1) business day of the order completion. BellSouth shall update the database within two (2) business days of receiving the data from MCIm. If BellSouth detects an error in the MCIm provided data, the data shall be returned to MCIm within two (2) business days from when it was provided to BellSouth. MCIm shall respond to requests from BellSouth to make corrections to database record errors by uploading corrected records within two (2) business days.

1.3.9 BellSouth agrees to treat all data on MCIm subscribers provided under this Agreement as strictly confidential and to use data on MCIm subscribers only for the purpose of providing E911 services.

1.3.10 BellSouth shall adopt use of a NENA ID (NENA standard five-character field) on all ALI records received from MCIm at such time as a NENA customer identification is implemented. The NENA ID will be used to identify the carrier of record in INP/LNP configurations.

1.3.11 BellSouth shall provide MCIm with the following information:

1.3.11.1 When requested by MCIm, the identification of the correct 911 tandem to which MCIm's 911 calls should be routed, based on

MCIm's NPA-NXX and MCIm's identification of the BellSouth NPA-NXX to which it corresponds.

1.3.11.2 Technical specifications for network interface (provided via BellSouth's web site) and technical specifications for database loading and maintenance (provided via the E911 Local Exchange Carrier Guide for Facility Based Carriers).

1.3.12 Where BellSouth is the host Telco, BellSouth shall provide MCIm with notification when MCIm's ALI records have been received. BellSouth shall ensure that the ALI records are delivered to the appropriate ALI/DBMS and selective router databases and are correctly entered.

1.3.13 Where BellSouth is the host telco, each ALI/DBMS discrepancy report shall be researched by MCIm, and BellSouth shall assist MCIm if necessary. The responsible Party shall take immediate corrective action.

1.3.14 Where BellSouth is responsible for maintenance of the ALI/DBMS database, BellSouth shall provide database maintenance at no charge to MCIm.

1.3.15 All MCIm lines that have been ported via INP shall reach the correct PSAP when 911 is dialed, provided MCIm has appropriate trunking in place. BellSouth shall send both the ported number and the MCIm number (if both are received from MCIm) to the PSAP.

1.3.15.1 BellSouth shall cooperate with MCIm to ensure that 911/E911 service is fully available to all MCIm End Users whose telephone numbers have been ported from BellSouth.

1.3.16 BellSouth shall notify MCIm forty-eight (48) hours in advance of any scheduled testing or maintenance affecting MCIm 911 service, and provide notification as soon as possible of any unscheduled outage affecting MCIm 911 service.

1.3.17 BellSouth, where available, shall cooperate with MCIm and the appropriate government agency to provide MCIm with the ten-digit POTS number of each PSAP that sub-tends each BellSouth 911 tandem to which MCIm is interconnected.

1.3.18 MCIm shall be responsible for reporting all errors, defects and malfunctions to BellSouth. BellSouth shall use its best efforts to provide

MCIm with the point of contact for reporting errors, defects, and malfunctions in the service and shall also provide escalation contacts within thirty (30) days of the Effective Date.

1.3.19 MCIm may enter into subcontracts with third parties, including MCIm Affiliates, for the performance of any of MCIm's duties and obligations stated herein.

1.3.20 Within ninety (90) days of a BellSouth decision to implement SS7 signaling, BellSouth shall notify MCIm of such decision.

1.3.21 BellSouth shall provide notification to MCIm of any pending tandem / selective router moves, NPA splits, or scheduled maintenance outages, with enough time to react.

1.3.22 BellSouth shall notify MCIm within thirty (30) days of BellSouth's decision to implement "reverse ALI" inquiries by public safety entities.

1.3.23 BellSouth shall continue its existing process for the management of NPA splits by populating the ALI/DBMS database with the appropriate new NPA codes.

1.3.24 MCIm may, at its discretion, further request additional and/or modified reporting as business needs demand.

Section 2. Operator Call Processing

2.1 General

2.1.1 BellSouth shall provide for the routing of local calls via Operator Call Processing (including but not limited to 0+, 0-) dialed by MCIm subscribers directly to either the MCIm operator service platform or BellSouth operator service platform as specified by MCIm. BellSouth shall provide MCIm with selective routing via Line Class Codes, where technically feasible. Further, MCIm and BellSouth shall continue to work with the appropriate industry groups to develop a long-term solution for selective routing. At such time as BellSouth implements a long-term solution, it shall be made available to MCIm at non-discriminatory rates, terms and conditions.

2.1.2 MCIm subscribers shall be provided, subject to subsection 2.1.1, above, the capability by BellSouth to dial the same telephone numbers to access MCIm operator services that BellSouth subscribers dial to access BellSouth Operator Call Processing. Trunking and signaling

requirements for Operator Call Processing trunks and trunk groups are set forth in this Agreement.

2.2 Operator Services

2.2.1 BellSouth shall provide, subject to subsection 2.1.1, above, Operator Call Processing as described below until, at MCIm's discretion, BellSouth routes calls to the MCIm Local Operator Services platform.

2.2.1.1 BellSouth agrees to provide MCIm subscribers the same Operator Call Processing available to BellSouth subscribers. BellSouth shall make available its service enhancements on a non-discriminatory basis.

2.2.2 BellSouth shall provide the following minimum Operator Call Processing capabilities to MCIm subscribers:

2.2.2.1 BellSouth shall complete 0+ and 0- dialed local calls.

2.2.2.2 BellSouth shall complete 0+ intraLATA toll calls.

2.2.2.3 BellSouth shall complete calls that are billed to a calling card. In the event that BellSouth accepts any Special Calling Cards or credit cards for completing calls, BellSouth shall notify MCIm and identify which cards are accepted.

2.2.2.4 BellSouth shall complete person-to-person calls.

2.2.2.5 BellSouth shall complete collect calls.

2.2.2.6 BellSouth shall provide the capability for callers to bill to a third party and shall complete such calls.

2.2.2.7 BellSouth shall complete station-to-station calls.

2.2.2.8 BellSouth shall process emergency calls when the caller dials 0- in error.

2.2.2.9 BellSouth shall process BLV/BLVI requests.

2.2.2.10 BellSouth shall process emergency call trace, subject to mutual agreement of MCIm and BellSouth on applicable processes.

2.2.2.11 BellSouth shall process operator-assisted Directory Assistance calls.

2.2.2.12 BellSouth shall route 0- traffic directly to an automated menu that will allow the caller to reach a "live" operator by either pressing a key or staying on the line.

2.2.2.13 BellSouth caller assistance for the disabled to MCIm in the same manner as provided to disabled BellSouth subscribers.

2.2.2.14 If and when available, BellSouth shall provide operator-assisted conference calling.

2.2.2.15 When requested by MCIm, BellSouth shall provide instant credit on operator services calls as provided to BellSouth subscribers.

2.2.2.16 Operator Call Processing shall adhere to equal access requirements when providing operator transfer services.

2.2.2.17 BellSouth shall provide MCIm with Operator Call Processing at Parity. Service quality must, at a minimum, comply with all federal, state and local requirements. BellSouth shall provide service measurements and accounting reports as mutually agreed by MCIm and BellSouth.

2.2.2.18 BellSouth shall direct MCIm subscriber account inquiries and other similar inquiries to the subscriber service center designated by MCIm.

2.2.2.19 BellSouth shall provide an electronic feed of subscriber call records in “EMI” format to MCIm in accordance with this Agreement.

2.2.2.20 Service levels shall comply, at a minimum, with State Regulatory Commission requirements for number of rings to answer, average work time, and disaster recovery options.

2.2.2.21 Upon a subscriber request for either a rate quote or time and charges, BellSouth shall, through a neutral response, inquire of the subscriber from which carrier the rate or time and charges is requested. BellSouth shall charge MCIm for the operator time for the inquiry at the rates set forth in Attachment 1 of this Agreement. If the carrier named by the subscriber uses BellSouth's Operator Transfer Service ("OTS"), then BellSouth shall connect the call to that carrier. If the carrier named by the subscriber does not use BellSouth's OTS, then BellSouth shall advise the subscriber to call the carrier directly.

2.2.3 BellSouth shall notify MCIm at least forty-five (45) days in advance of any changes or enhancements to its Operator Services, and one hundred and eighty (180) days in advance of conversion to SS7 signaling for Operator Services, and shall make available such service enhancements on a nondiscriminatory basis immediately upon activation.

2.2.4 Branding

<u>Branding for Operator Call Processing and Directory Assistance</u>

2.2.4.1 The BellSouth Operator Systems Branding Feature provides a definable announcement to MCIm End Users using Directory Assistance (DA)/Operator Call Processing (OCP) prior to placing such End Users in queue or connecting them to an available operator or automated operator system. This feature allows MCIm to have its calls custom-branded with MCIm's name on whose behalf BellSouth is providing Directory Assistance and/or Operator Call Processing. Rates for Custom Branding, Operator Call Process and Directory Assistance are set forth in Attachment 1 of this Agreement.

2.2.4.2 BellSouth offers three (3) service levels of branding to MCIm when ordering BellSouth's Directory Assistance and/or Operator Call Processing.

2.2.4.2.1 Service Level 1 - BellSouth Branding

2.2.4.2.2 Service Level 2 – Unbranding

2.2.4.2.3.Service Level 3 - Custom Branding

2.2.4.3 Where MCIm resells BellSouth's services or purchases unbundled local switching from BellSouth (either alone or as part of the Unbundled Network Element Platform (UNE-P), BellSouth will provide Self Branding to MCIm upon request, whereby, through Selective Carrier Routing, BellSouth will route MCIm's End User calls to a directory assistance provider and/or operator services provider other than BellSouth. BellSouth offers Self Branding as described in this Attachment.

2.2.4.4 For Resellers and Use with an Unbundled Switch Port

2.2.4.4.1 BellSouth Branding is the Default Service Level.

2.2.4.4.2 Except as otherwise set forth herein, Unbranding, Custom Branding, and Self Branding require MCIm to order Selective Carrier Routing for each originating BellSouth end office identified by MCIm. Rates for Selective Carrier Routing are set forth in Attachment 1 of this Agreement.

2.2.4.4.3 Custom Branding and Self Branding require MCIm to order dedicated trunking from each BellSouth end office identified by MCIm, either to the BellSouth Traffic Operator Position System (TOPS) for Custom Branding or to the MCIm Operator Service Provider for Self Branding. Rates for trunks are set forth in Attachment 1 of this Agreement.

2.2.4.4.4 <u>Unbranding</u> - Unbranded Directory Assistance and/or Operator Call Processing calls traverse common trunk groups provisioned by BellSouth from those end offices identified by MCIm to the BellSouth TOPS. Such trunk groups are common to CLECs choosing Unbranded Directory Assistance and/or Operator Call Processing. These calls are routed to "No Announcement."

2.2.4.4.5 <u>OLNS</u>. In addition to the branding methods described above for resale and UNE-P, Unbranding and Custom Branding are also available for Directory Assistance and Operator Call Processing via Originating Line Number Screening (OLNS) functionality after June 30, 2001. When utilizing this method of Unbranding or Custom Branding, MCIm shall not be required to purchase dedicated trunking.

2.2.4.4.6 For BellSouth to provide Unbranding or Custom Branding via OLNS functionality for Operator Call Processing and Directory Assistance, BellSouth must load MCIm's Operating Carrier Numbers (OCN(s)) and telephone numbers associated with such OCN(s) in BellSouth's Line Information Database ("LIDB"); provided, however, that if MCIm desires to offer Alternate Billed Services (collect, third number billed and calling card calls) to its End Users, MCIm must provide BellSouth with appropriate LIDB updates pursuant to Attachment 3 of this Agreement. To implement Unbranding and Custom Branding via OLNS software, MCIm must submit a manual order form which requires, among other things, MCIm's OCN and a forecast of the expected directory assistance call volume at busy hour or of the maximum number of simultaneous call paths to the digital announcement anticipated for each BellSouth TOPS. MCIm shall provide updates to such forecast on a quarterly basis and at any time such forecasted traffic volumes are expected to change significantly. BellSouth and MCIm shall work cooperatively to develop forecasting methods and procedures for OLNS. Upon MCIm's purchase of Unbranding or Custom Branding using OLNS software for any particular TOPS, all MCIm End Users served by that TOPS will receive the Unbranded "no announcement" or the Custom Branded announcement. Orders for Unbranding or Custom Branding via OLNS software shall be completed in approximately sixty (60) days from BellSouth's receipt of MCIm's complete, error-free order. MCIm may request that BellSouth complete an order in less than sixty (60) days, and BellSouth shall use commercially reasonable efforts to do so.

2.2.4.4.7 Rates for Unbranding and Custom Branding via OLNS software for Directory Assistance and for Operator Call Processing are as set forth in Attachment 1 of this Agreement. Notwithstanding anything to the contrary in this Agreement, to the extent BellSouth is unable to bill MCIm applicable charges currently, BellSouth shall track such charges and will bill the same retroactively at such time as a billing process is implemented. In addition to the charges for Unbranding and Custom Branding via OLNS software, MCIm shall continue to pay BellSouth applicable labor and other charges for the use of BellSouth's Directory Assistance and Operator Call Processing platforms as set

forth in Attachment 1 of this Agreement. Further, where MCIm is purchasing unbundled local switching from BellSouth, UNE usage charges for end office switching, tandem switching and transport, as applicable, shall continue to apply.

2.2.4.4.8 For Facilities Based Carriers

2.2.4.4.9 All Service Levels require MCIm to order dedicated trunking from its end office(s) point of interface to the BellSouth TOPS. Rates for trunks are set forth in Attachment 1 of this Agreement.

2.2.4.4.10 Customized Branding includes charges for the recording of the branding announcement and the loading of the audio units in each TOPS, Interactive Voice Subsystem (IVS) and Network Applications Vehicle (NAV) equipment for which MCIm requires service.

2.2.4.5 Directory Assistance customized branding requires:

2.2.4.5.1 The recording of the name;

2.2.4.5.2 The front-end loading of the Digital Recorded Announcement Machine (DRAM) in each TOPS.

2.2.4.6 Operator Call Processing customized branding requires:

2.2.4.6.1 The recording of the name;

2.2.4.6.2 The front-end loading of the DRAM in the TOPS;

2.2.4.6.3 The back-end loading in the audio units in the Automated Alternate Billing System (AABS) in the Interactive Voice Subsystem (IVS);

2.2.4.7 The 0- automation loading for the audio units in the Enhanced Billing and Access Service (EBAS) in the Network Applications Vehicle (NAV).

2.2.4.8 BellSouth shall direct Customer account and other similar inquiries to the subscriber service center designated by MCIm.

2.2.4.9 BellSouth shall provide an electronic feed of Customer call records in EMI format to MCIm for billing purposes as required by MCIm.

2.3 Emergency Calls to Operator

2.3.1 BellSouth will accept and process emergency calls to BellSouth operators. BellSouth shall not charge to accept and process emergency calls for MCIm resale customers, however, BellSouth shall charge the appropriate operator work time charge set forth in Attachment 1 for MCIm facility-based Customers.

2.3.1.1 The BellSouth operator will ask the caller where he or she lives and transfer the caller to the appropriate emergency agency (e.g., fire, police, poison control) for the caller's area.

2.3.1.2 If the BellSouth operator is unable to determine the caller's community, BellSouth will handle such calls as it does for its own End Users.

2.3.1.3 If the assistance of another carrier's operator is required, BellSouth will attempt to reach the appropriate operator via inward operator assistance, if such facilities exist, or by any other means, if such facilities do not exist, that BellSouth uses to serve its customers.

2.4 Billed Number Screening

2.4.1 BellSouth shall perform Billed Number Screening, at the rates set forth in Attachment 1 when handling Collect, Third Party and Calling Card Calls, both for station-to-station and person-to-person call types.

2.4.2 Unless directed otherwise by MCIm, in the event that End User subscribers change their local service provider, BellSouth shall maintain subscriber data (for line numbers, card numbers, and for any other types of data maintained in LIDB) so that such subscribers shall not experience any interruption of service due to the lack of such maintenance of subscriber data. In the event that End User subscribers change their local service provider, BellSouth shall use its best efforts to avoid service interruption in those situations where BellSouth has control over additions and deletions in the database as LIDB provider.

2.4.3 BellSouth shall exercise at least the same level of fraud control in providing Operator Call Processing to MCIm as that which BellSouth provides for its own Operator Call Processing.

2.5 Busy Line Verification/Busy Line Verification Interruption (BLV/BLVI)

2.5.1 When BellSouth provides switching, BellSouth shall provide BLV/BLVI, at Parity, when MCIm purchases BellSouth Operator Call Processing.

2.5.2 When MCIm provides switching, BellSouth shall provide BLV/BLVI when MCIm purchases verification trunks to each MCIm end office for which MCIm requests BellSouth to provide BLV/BLVI and for which MCIm purchases BellSouth Operator Call Processing.

2.6 Inward Operator Services

2.6.1 If MCIm does not use BellSouth's operator services for Operator Call Processing, MCIm may order Inward Operator Services from BellSouth.

2.6.2 Inward Operator Services allows the MCIm operator to route inward to a BellSouth operator when a MCIm End User has requested the busy line verification and/or interruption of a BellSouth End User's line (and/or end user lines for which Operator Call Processing is performed on behalf of other LECs by BellSouth). At the request of the MCIm operator, the BellSouth operator shall check for conversation. If the BellSouth operator hears "scrambled" conversation, the BellSouth operator shall perform an interruption if requested. The BellSouth operator shall report the results to the MCIm operator who shall report to the MCIm End User.

2.6.3 MCIm, at its option, may order, and BellSouth shall provision, trunks from its own operator services platform directly to BellSouth's operator service center. BellSouth shall work cooperatively with MCIm to establish alternative methods of routing inward operator services calls. If BellSouth establishes network routable access codes in the LERG for reaching BellSouth's operator center, BellSouth shall make such codes available to MCIm via the Local Interconnection Trunk Groups.

2.6.4 Charges for services provided pursuant to Section 2 shall be set forth in Attachment 1 of this Agreement.

2.7 Operator Assisted Calls to Directory Assistance ("OADA")

2.7.1 OADA refers to the situation in which a calling party dials "0" and asks the operator for Directory Assistance and is automatically transferred to a Directory Assistance operator. BellSouth will offer OADA to MCIm calling parties on a nondiscriminatory basis.

2.8 Operator Services Trunking Arrangements

2.8.1 BellSouth shall route resale and UNE-P Operator Services traffic to MCIm's designated platform using selective routing.

Section 3. Directory Assistance ("DA")

3.1 General

3.1.1 When BellSouth provides local switching or resale services to MCIm, BellSouth shall provide for the routing of directory assistance calls (including but not limited to 411, 555-1212, FNPA-555-1212) dialed by MCIm subscribers directly to either the MCIm DA service platform or BellSouth DA service platform as specified by MCIm. MCIm End Users may use the same dialing arrangements as BellSouth End Users, but obtain an unbranded or MCIm-branded service as requested by MCIm. BellSouth shall provide MCIm with selective routing via Line Class Codes or AIN, at MCIm's option, where technically feasible. Further, MCIm and BellSouth shall continue to work with the appropriate industry groups to develop a long term solution for selective routing. At such time as BellSouth implements a long-term solution, it shall be made available to MCIm at nondiscriminatory rates, terms, and conditions.

3.1.2 MCIm subscribers shall be provided, subject to subsection 3.2.1.2 below, the capability by BellSouth to dial the same telephone numbers for access to MCIm Directory Assistance that BellSouth subscribers dial to access BellSouth Directory Assistance.

3.2 Directory Assistance

3.2.1 BellSouth shall provide, subject to subsection 3.1.1 above, Directory Assistance functions and services to MCIm for its subscribers as described below until at, MCIm's discretion, BellSouth routes calls to the MCIm Directory Assistance Services platform.

3.2.1.1 At MCIm's option, BellSouth shall route all MCIm 411, 1411, 555-1212 traffic to MCIm's Directory Assistance Services platform using selective routing.

3.2.1.2 BellSouth agrees to provide MCIm customers with the same Directory Assistance service available to BellSouth subscribers.

3.2.2 BellSouth shall provide the following minimum Directory Assistance capabilities to MCIm's subscribers:

3.2.2.1 A minimum of two (2) subscriber listings and/or addresses or BellSouth parity per MCIm subscriber request.

3.2.2.2 Name and address to MCIm subscribers upon request, except for unlisted numbers, in the same states where such information is provided to BellSouth subscribers.

3.2.2.3 Upon request, call completion to the requested number for local and intraLATA toll calls shall be sent, subject to subsection 3.1.1, above, to the network specified by MCIm. Rating and billing shall be done by MCIm.

3.2.2.4 Populate the Directory Assistance database in the same manner and in the same time frame as for BellSouth subscribers.

3.2.2.5 Any information provided by a Directory Assistance Automatic Response Unit (ARU) shall be repeated the same number of times for MCIm subscribers as for BellSouth's subscribers.

3.2.2.6 When requested by MCIm, BellSouth shall provide instant credit on directory assistance calls as provided to BellSouth subscribers.

3.2.2.7 BellSouth shall provide Directory Assistance to MCIm subscribers in accordance with BellSouth's internal operating procedures and standards, which shall, at a minimum, comply with accepted professional and industry standards.

3.2.3 BellSouth shall notify MCIm in advance of any changes or enhancements to its DA service, and shall make available such service enhancements on a non-discriminatory basis to MCIm.

3.2.4 BellSouth shall provide MCIm with the same level of support for the provisioning of Directory Assistance as BellSouth provides itself. Directory Assistance service quality must be at Parity, and must comply with specifications that are required by law, regulatory agency, or by BellSouth's own internal procedures, whichever are the most rigorous.

3.2.4.1 Service levels shall comply, at a minimum, with State Regulatory Commission requirements for number of rings to answer, average work time, and disaster recovery options.

3.3 Directory Assistance Data

3.3.1 Consistent with applicable laws and regulations, BellSouth shall provide to MCIm via its Directory Assistance Database Service (DADS), the subscriber records used by BellSouth to create and maintain its Directory Assistance Data Base, in a non-discriminatory manner. The records shall include all records in BellSouth's Directory Assistance Database, including those of its own customers, independent telephone companies' customers, and customers of CLECs. MCIm may combine these records with any other Network Element for the provision of any Telecommunications Service. Neither Party shall use the records for any purpose, which violates federal or State laws, statutes, or regulatory orders.

3.3.2 Directory Assistance Data shall be provided on the same terms and conditions that BellSouth provides to itself or other third parties, and at the same rates that BellSouth provides to other third parties.

3.3.2.1 Unless otherwise directed by MCIm, BellSouth shall provide MCIm subscriber records along with BellSouth subscriber records to third party carriers that request directory assistance records from BellSouth. If MCIm does direct otherwise, BellSouth shall remove MCIm's subscriber records from BellSouth's Directory Assistance database.

3.3.3 BellSouth shall provide MCIm, to the extent authorized, a complete list of ILECs, CLECs, and independent Telcos that provided data contained in the database.

3.3.4 BellSouth will provide daily updates that will reflect all listing change activity occurring since MCIm's most recent update. BellSouth shall provide updates to MCIm on a Business, Residence, or combined Business and Residence basis.

3.3.5 BellSouth shall provide complete refresh of the Directory Assistance Data upon mutual agreement of BellSouth and MCIm and subject to applicable charges pursuant to Attachment 1 of this Agreement.

3.3.6 Provided that MCIm maintains, at its own expense, equipment and systems necessary at MCIm's end for the Parties to exchange directory assistance data in the Intermediate Record Format (IRF), negotiated and agreed upon by the Parties, as such format may be amended by further mutual agreement, all directory assistance data shall be provided in IRF. MCIm is not responsible for providing any equipment or systems on BellSouth's end in order for the Parties to exchange records using IRF.

3.3.6.1 Subject to amendments to the IRF that may be agreed to by the Parties, records exchanged using IRF shall include all identifiers and indicators currently used for processing Subscriber Listing Information ("SLI").

3.3.7 MCIm and BellSouth, upon mutual agreement, will designate a Technically Feasible point at which the data will be provided.

3.4 Directory Assistance Data Information Exchanges and Interfaces.

3.4.1 BellSouth shall provide to MCIm the following:

3.4.1.1 List of NPA-NXXs relating to the listing records being provided.

3.4.1.2 List of directory section names and their associated NPA-NXXs.

3.4.1.3 List of community names expected to be associated with each of the NPA-NXXs for which listing records are provided.

3.4.1.4 List of independent company names and their associated NPA-NXXs for which their listing data is included in BellSouth's listing data.

3.4.1.5 Identification of any area wide or universal service numbers which may be listed.

3.4.1.6 Identification of the telephone number to be provided to callers outside the servicing area.

3.4.1.7 Identification of any listing condition(s) unique to BellSouth's serving area which may require special handling in data processing in the directory. Indented listings (Captions) must be identified and delivered and handled as specified.

3.4.2 BellSouth and MCIm shall exchange records using Network Data Mover (NDM), or another electronic transmission method on which the Parties may agree. BellSouth shall identify tracking information requirements (for example, use of header and trailer records for tracking date and time, cycle numbers, sending and receiving site codes, volume count for the given dataset).

3.4.2.1 BellSouth shall identify dates MCIm should not expect to receive daily update activity.

3.5 Directory Assistance Trunking Arrangements

3.5.1 At its option, MCIm may order, and BellSouth shall provision, separate trunk groups connecting MCIm's switch to BellSouth's directory assistance center; or at MCIm's option route Directory Assistance traffic over the Local Interconnection Trunk Group using NPA 555-1212.

Section 4. Directory Listings ("DL")

4.1 Release of MCIm Directory Listings to Independent Publishers. Unless otherwise directed by MCIm, BellSouth shall provide MCIm Customer listings along with the Customer listings of its own Customers to third parties for inclusion in Directory Assistance databases. BellSouth shall not disclose nor allow any third party to disclose non-listed name or address information for any purpose other than what may be necessary to complete directory distribution.

4.1.1 MCIm agrees to provide to BellSouth, and BellSouth agrees to accept, MCIm Subscriber Listing Information (SLI) relating to MCIm customers in the geographic area(s) covered by this Interconnection Agreement. MCIm authorizes BellSouth to release all such MCIm SLI provided to BellSouth by MCIm to qualifying third parties pursuant to

BellSouth's General Subscriber Services Tariff, Section A38.2, as the same may be amended from time to time. Such MCIm SLI shall be intermingled with BellSouth's own customer listings and shall not be differentiated from the BellSouth listings or from the listings of any other CLEC that has authorized a similar release of Subscriber Listing Information. BellSouth will use good faith efforts to obtain state commission approval of necessary modifications to Section A38.2 of its tariff to provide for release of third party directory listings, including modifications regarding listings to be released pursuant to such tariff and BellSouth's liability thereunder. BellSouth's obligation pursuant to this Section shall not arise in any particular state until the Commission of such state has approved modifications to such tariff.

4.1.2 No compensation shall be paid to MCIm for BellSouth's receipt of MCIm SLI, or for the subsequent release to third parties of such SLI. MCIm agrees to reimburse BellSouth for any costs associated with the initial development of system changes required to make available the MCIm SLI in accordance with this Section. In addition, to the extent BellSouth incurs costs on an ongoing basis to administer the release of MCIm's SLI, MCIm shall pay to BellSouth its proportionate share of the reasonable costs associated therewith. Before BellSouth incurs any costs under this Section, it shall inform MCIm as of its good faith estimate of MCIm's share of such costs, and MCIm shall have the option of agreeing in writing to the costs, or of discontinuing BellSouth's release of MCIm's SLI.

4.1.3 BellSouth shall not be liable for the content or accuracy of any SLI provided by MCIm under this Agreement. MCIm shall indemnify, hold harmless and defend BellSouth from and against any damages, losses, liabilities, demands, claims, suits, judgments, costs and expenses (including but not limited to reasonable attorneys fees and expenses) arising from BellSouth's tariff obligations or otherwise and resulting from or arising out of any third party's claim of inaccurate MCIm listings or use of the SLI provided pursuant to this Agreement. BellSouth shall forward to MCIm any complaints received by BellSouth relating to the accuracy or quality of MCIm's listings. The date for the initial release of MCIm's listings and subsequent updates shall be negotiated by the Parties.

4.2 Directory Assistance and Listings Service Requests

4.2.1 These requirements pertain to BellSouth's DA and Listings Service Request process that enables MCIm to (a) submit MCIm subscriber

information for inclusion in BellSouth Directory Assistance and Directory Listings databases; (b) submit MCIm subscriber information for inclusion in published directories; and (c) provide MCIm subscriber delivery address information to enable BellSouth to fulfill directory distribution obligations.

4.2.2 BellSouth will provide to MCIm the following Directory Listing Migration Options, valid under all interconnection methods, including but not limited to, Resale, Unbundled Network Elements and Facilities-Based:

4.2.2.1 Migrate with no Changes: Retain and transfer all white and transfer all yellow page listings for the subscriber in both DA and DL. Transfer ownership and billing for listings to MCIm.

4.2.2.2 Migrate with Changes: Retain and transfer all white and transfer all yellow page listings for the subscriber in both DA and DL. Based on the information provided in the order, incorporate the specified additional listings to, or delete the specified listings from, the directory. Transfer ownership and billing, if appropriate, for the listings to MCIm.

4.2.3 BellSouth shall enable MCIm to electronically transmit multi-line listing orders.

4.2.4 BellSouth shall not charge for storage of MCIm subscriber information in the DA and DL systems.

4.2.5 MCIm shall not charge for storage of BellSouth subscriber information in the DA and DL systems.

Attachment 10

Performance Measurements

SERVICE PERFORMANCE MEASUREMENTS AND ENFORCEMENT MECHANISMS

Section 1. Introduction

1.1 This Attachment includes service quality measurements applicable to this Agreement on an interim basis, pending the Tennessee Regulatory Authority's generic performance measures docket. Notwithstanding any other provision of this Attachment, BellSouth shall not be required to pay remedies on these interim measurements. After the effective date of any orders released by the Tennessee Regulatory Authority in that docket, BellSouth shall implement those orders, including any remedies, if applicable, and the Parties shall negotiate an amendment replacing this Attachment with an incorporation of those orders. BellSouth's implementation of the orders shall not be delayed by the negotiation of the amendment.

BELLSOUTH®

BellSouth Service Quality Measurement Plan (SQM)

Georgia Performance Metrics

Measurement Descriptions
Version 1.01

Issue Date: April 6, 2001

This version of the Georgia SQM reflects the Order in GA Docket 7892-U. Some of the measures, business rules, disaggregations and/or exclusions are under development and will be reflected in the monthly reports in the near future. The other Georgia SQM posted on this site will be removed at that time.

Introduction

The BellSouth Service Quality Measurement Plan (SQM) describes in detail the measurements produced to evaluate the quality of service delivered to BellSouth's customers both wholesale and retail. The SQM was developed to respond to the requirements of the Communications Act of 1996 Section 251 (96 Act) which required BellSouth to provide non-discriminatory access to Competitive Local Exchange Carriers (CLEC)[1] and its Retail Customers. The reports produced by the SQM provide regulators, CLECs and BellSouth the information necessary to monitor the delivery of non-discriminatory access.

This plan results from the many divergent forces evolving from the 96 Act. The 96 Act, the Georgia Public Service Commission (GPSC) Order (Docket 7892-U 12/30/97), LCUG 1-7.0, the FCC's NPRM (CC Docket 98-56 RM9101 04/17/98), the Louisiana Public Service Commission (LPSC) Order (Docket U-22252 Subdocket C 04/19/98), numerous arbitration cases, LPSC sponsored collaborative workshops (10/98-02/00), and proceedings in Alabama, Mississippi, and North Carolina have and continue to influence the SQM. **This version of the SQM reflects the Order of the Georgia Public Service Commission in Docket 7892-U dated January 12, 2001**.

The SQM and the reports flowing from it must change to reflect the dynamic requirements of the industry. New measurements are added as new products, systems, and processes are developed and fielded. New products and services are added as the markets for them develop and the processes stabilize. The measurements are also changed to reflect changes in systems, correct errors, and respond to both 3rd Party audit requirements and the Georgia PSC.

This document is intended for use by someone with knowledge of telecommunications industry, information technologies and a functional knowledge of the subject areas covered by the BellSouth Performance Measurements and the reports that flow from them.

Once it is approved, the most current copy of this document can be found on the web at URL: https://pmap.bellsouth.com in the Help folder.

Report Publication Dates

Each month, preliminary SQM reports will be posted to BellSouth's SQM web site (https://www.pmap.bellsouth.com) by 8:00 A.M. EST on the 21st day of each month or the first business day after the 21st. Final validated SQM reports will be posted by 8:00 A.M. on the last day of the month. Reports not posted by this time will be considered late for SEEM payment purposes. Preliminary SEEM reports will be posted on the same day as the SQM validated reports. Validated SEEM reports will posted on the 15th of the following month. Payments due will also be paid on the 15th of the following month. For instance: May data will be posted in preliminary SQM reports on June 21. Final validated SQM reports and preliminary SEEM reports will be posted on the last day of June. Final validated SEEM reports will be posted and payments mailed on July 15th.

1. Alternative Local Exchange Companies (ALEC) and Competing Local Providers (CLP) are referred to as Competitive Local Exchange Carriers (CLEC) in this document.

Report Delivery Methods

CLEC SQM and SEEM reports will be considered delivered when posted to the web site. The Georgia Public Service Commission (GPSC) will be given access to the web site. In addition, a copy of the Monthly State Summary reports will be filed with the GPSC as soon as possible after the last day of each month.

Contents

Section 1: Operations Support Systems (OSS)

OSS-1: Average Response Time and Response Interval (Pre-Ordering/Ordering) - 1-1
OSS-2: Interface Availability (Pre-Ordering/Ordering) - 1-6
OSS-3: Interface Availability (Maintenance & Repair) - 1-9
OSS-4: Response Interval (Maintenance & Repair) - 1-11
PO-1: Loop Makeup - Response Time – Manual - 1-13
PO-2: Loop Make Up - Response Time - Electronic - 1-15

Section 2: Ordering

O-1: Acknowledgement Message Timeliness- 2-1
O-2: Acknowledgement Message Completeness - 2-3
O-3: Percent Flow-Through Service Requests (Summary) - 2-5
O-4: Percent Flow-Through Service Requests (Detail) - 2-8
O-5: Flow-Through Error Analysis - 2-11
O-6: CLEC LSR Information - 2-13
O-7: Percent Rejected Service Requests - 2-19
O-8: Reject Interval - 2-22
O-9: Firm Order Confirmation Timeliness - 2-25
O-10: Service Inquiry with LSR Firm Order Confirmation (FOC) Response Time Manual - 2-29
O-11: Firm Order Confirmation and Reject Response Completeness - 2-31
O-12: Speed of Answer in Ordering Center - 2-33
O-13: LNP-Percent Rejected Service Requests - 2-35
O-14: LNP-Reject Interval Distribution & Average Reject Interval - 2-37
O-15: LNP-Firm Order Confirmation Timeliness Interval Distribution & Firm Order Confirmation Average Interval- - - - - - - 2-40

Section 3: Provisioning

P-1: Mean Held Order Interval & Distribution Intervals - 3-1
P-2: Average Jeopardy Notice Interval & Percentage of Orders Given Jeopardy Notices - 3-4
P-3: Percent Missed Installation Appointments - 3-7
P-4: Average Completion Interval (OCI) & Order Completion Interval Distribution - 3-10
P-5: Average Completion Notice Interval - 3-13
P-6: % Completions/Attempts without Notice or < 24 hours Notice - 3-16
P-7: Coordinated Customer Conversions Interval- 3-18
P-7A: Coordinated Customer Conversions – Hot Cut Timeliness% Within Interval and Average Interval - - - - - - - - - - - - - - - 3-20
P-7B: Coordinated Customer Conversions – Average Recovery Time - 3-22
P-7C: Hot Cut Conversions - % Provisioning Troubles Received Within 7 days of a completed Service Order - - - - - - - - - - - 3-24
P-8: Cooperative Acceptance Testing - % of xDSL Loops Tested- 3-26
P-9: % Provisioning Troubles within 30 days of Service Order Completion - 3-28
P-10: Total Service Order Cycle Time (TSOCT) - 3-31
P-11: Service Order Accuracy - 3-34
P-12: LNP-Percent Missed Installation Appointments - 3-36
P-13: LNP-Average Disconnect Timeliness Interval & Disconnect Timeliness Interval Distribution - - - - - - - - - - - - - - - - - - - 3-38
P-14: LNP-Total Service Order Cycle Time (TSOCT) - 3-40

Section 4: Maintenance & Repair

M&R-1: Missed Repair Appointments - 4-1
M&R-2: Customer Trouble Report Rate - 4-3
M&R-3: Maintenance Average Duration - 4-5
M&R-4: Percent Repeat Troubles within 30 Days - 4-7
M&R-5: Out of Service (OOS) > 24 Hours - 4-9
M&R-6: Average Answer Time – Repair Centers - 4-11
M&R-7: Mean Time To Notify CLEC of Network Outages - 4-13

Section 5: Billing

B-1: Invoice Accuracy - 5-1
B2: Mean Time to Deliver Invoices - 5-3
B3: Usage Data Delivery Accuracy - 5-5
B4: Usage Data Delivery Completeness - 5-7
B5: Usage Data Delivery Timeliness - 5-9
B6: Mean Time to Deliver Usage - 5-11
B7: Recurring Charge Completeness - 5-13
B8: Non-Recurring Charge Completeness - 5-15

Section 6: Operator Services And Directory Assistance

OS-1: Speed to Answer Performance/Average Speed to Answer - Toll - 6-1
OS-2: Speed to Answer Performance/Percent Answered with "X" Seconds – Toll - 6-3
DA-1: Speed to Answer Performance/Average Speed to Answer – Directory Assistance (DA) - 6-4
DA-2: Speed to Answer Performance/Percent Answered within "X" Seconds – Directory Assistance (DA) - 6-6

Section 7: Database Update Information

D-1: Average Database Update Interval - 7-1
D-2: Percent Database Update Accuracy - 7-3
D-3: Percent NXXs and LRNs Loaded by the LERG Effective Date - 7-5

Section 8: E911

E-1: Timeliness - 8-1
E-2: Accuracy - 8-3
E-3: Mean Interval - 8-4

Section 9: Trunk Group Performance

TGP-1: Trunk Group Performance-Aggregate - 9-1
TGP-2: Trunk Group Performance-CLEC Specific - 9-4

Section 10: Collocation

C-1: Collocation Average Response Time - 10-1
C-2: Collocation Average Arrangement Time - 10-3
C-3: Collocation Percent of Due Dates Missed - 10-5

Section 11: Change Management

CM-1: Timeliness of Change Management Notices - 11-1
CM-2: Change Management Notice Average Delay Days - 11-3
CM-3: Timeliness of Documents Associated with Change - 11-5
CM-4: Change Management Documentation Average Delay Days - 11-7
CM-5: Notification of CLEC Interface Outages - 11-9

Section 12: Bona Fide / New Business Request Process

BFR-1: Percentage of BFR/NBR Requests Processed Within 30 Business Days - 12-1

BFR-2: Percentage of Quotes Provided for Authorized BFR/NBR Requests Processed Within X (10/30/60) Business Days - - - 12-3

Appendix A: Reporting Scope **A-1**

A-1: Standard Service Groupings - - -

Section 1: Operations Support Systems (OSS)

OSS-1: Average Response Time and Response Interval (Pre-Ordering/ Ordering)

Definition

Average response time and response intervals are the average times and number of requests responded to within certain intervals for accessing legacy data associated with appointment scheduling, service & feature availability, address verification, request for Telephone numbers (TNs), and Customer Service Records (CSRs).

Exclusions

None

Business Rules

The average response time for retrieving pre-order/order information from a given legacy system is determined by summing the response times for all requests submitted to the legacy systems during the reporting period and dividing by the total number of legacy system requests for that month.

The response interval starts when the client application (LENS or TAG for CLECs and RNS or ROS for BellSouth) submits a request to the legacy system and ends when the appropriate response is returned to the client application. The number of accesses to the legacy systems during the reporting period which take less than 2.3 seconds, the number of accesses which take more than 6 seconds, and the number which are less than or equal to 6.3 seconds are also captured.

Calculation

Response Time = (a - b)

- a = Date & Time of Legacy Response
- b = Date & Time of Legacy Request

Average Response Time = c ÷ d

- c = Sum of Response Times
- d = Number of Legacy Requests During the Reporting Period

Report Structure

- Not CLEC Specific
- Not product/service specific
- Regional Level

Data Retained

Relating to CLEC Experience	Relating to BellSouth Performance
• Report Month • Legacy Contract (per reporting dimension) • Response Interval • Regional Scope	• Report Month • Legacy Contract (per reporting dimension) • Response Interval • Regional Scope

SQM Disaggregation - Analog/Benchmark

SQM Level of Disaggregation	SQM Analog/Benchmark
• **RSAG – Address** (Regional Street Address Guide-Address) – stores street address information used to validate customer addresses. CLECs and BellSouth query this legacy system. • **RSAG – TN** (Regional Street Address Guide-Telephone number) – contains information about facilities available and telephone numbers working at a given address. CLECs and BellSouth query this legacy system. • **ATLAS** (Application for Telephone Number Load Administration and Selection) – acts as a warehouse for storing telephone numbers that are available for assignment by the system. It enables CLECs and BellSouth service reps to select and reserve telephone numbers. CLECs and BellSouth query this legacy system. • **COFFI** (Central Office Feature File Interface) – stores information about product and service offerings and availability. CLECs query this legacy system. • **DSAP** (DOE Support Application) – provides due date information. CLECs and BellSouth query this legacy system. • **HAL/CRIS** (Hands-Off Assignment Logic/Customer Record Information System) – a system used to access the Business Office Customer Record Information System (BOCRIS). It allows BellSouth servers, including LENS, access to legacy systems. CLECs query this legacy system. • **P/SIMS** (Product/Services Inventory Management system) – provides information on capacity, tariffs, inventory and service availability. CLECs query this legacy system. • **OASIS** (Obtain Available Services Information Systems) – Information on feature and rate availability. BellSouth queries this legacy system.	• Parity + 2 seconds

Table 1: Legacy System Access Times For RNS

System	Contract	Data	< 2.3 sec.	> 6 sec.	≤ 6.3 sec.	Avg. Sec.	# of Calls
RSAG	RSAG-TN	Address	x	x	x	x	x
RSAG	RSAG-ADDR	Address	x	x	x	x	x
ATLAS	ATLAS-TN	TN	x	x	x	x	x
DSAP	DSAP	Schedule	x	x	x	x	x
CRIS	CRSACCTS	CSR	x	x	x	x	x
OASIS	OASISCAR	Feature/Service	x	x	x	x	x
OASIS	OASISLPC	Feature/Service	x	x	x	x	x
OASIS	OASISMTN	Feature/Service	x	x	x	x	x
OASIS	OASISBIG	Feature/Service	x	x	x	x	x

Table 2: Legacy System Access Times For R0S

System	Contract	Data	< 2.3 sec.	> 6 sec.	≤6.3 sec.	Avg. sec.	# of Calls
RSAG	RSAG-TN	Address	x	x	x	x	x
RSAG	RSAG-ADDR	Address	x	x	x	x	x
ATLAS	ATLAS-TN	TN	x	x	x	x	x

Table 2: Legacy System Access Times For R0S

System	Contract	Data	< 2.3 sec.	> 6 sec.	≤6.3 sec.	Avg. sec.	# of Calls
DSAP	DSAP	Schedule	x	x	x	x	x
CRIS	CRSOCSR	CSR	x	x	x	x	x
OASIS	OASISBIG	Feature/Service	x	x	x	x	x

Table 3: Legacy System Access Times For LENS

System	Contract	Data	< 2.3 sec.	> 6 sec.	≤6.3 sec.	Avg. sec.	# of Calls
RSAG	RSAG-TN	Address	x	x	x	x	x
RSAG	RSAG-ADDR	Address	x	x	x	x	x
ATLAS	ATLAS-TN	TN	x	x	x	x	x
DSAP	DSAP	Schedule	x	x	x	x	x
HAL	HAL/CRIS	CSR	x	x	x	x	x
COFFI	COFFI/USOC	Feature/Service	x	x	x	x	x
P/SIMS	PSIMS/ORB	Feature/Service	x	x	x	x	x

Table 4: Legacy System Access Times For TAG

System	Contract	Data	< 2.3 sec.	> 6 sec.	≤6.3 sec.	Avg. sec.	# of Calls
RSAG	RSAG-TN	Address	x	x	x	x	x
RSAG	RSAG-ADDR	Address	x	x	x	x	x
ATLAS	ATLAS-TN	TN	x	x	x	x	x
ATLAS	ATLAS-MLH	TN	x	x	x	x	x
ATLAS	ATLAS-DID	TN	x	x	x	x	x
DSAP	DSAP	Schedule	x	x	x	x	x
CRIS	CRSECSRL	CSR	x	x	x	x	x
CRIS	CRSECSR	CSR	x	x	x	x	x

SEEM Measure

SEEM Measure		
Yes	Tier I	
	Tier II	X
	Tier III	

Note: CLEC specific data is not available in this measure. Queries of this sort do not have company specific signatures.

SEEM Disaggregation - Analog/Benchmark

SEEM Disaggregation	SEEM Analog/Benchmark
• **RSAG – Address** (Regional Street Address Guide-Address) – stores street address information used to validate customer addresses. CLECs and BellSouth query this legacy system. • **RSAG – TN** (Regional Street Address Guide-Telephone number) – contains information about facilities available and telephone numbers working at a given address. CLECs and BellSouth query this legacy system. • **ATLAS** (Application for Telephone Number Load Administration and Selection) – acts as a warehouse for storing telephone numbers that are available for assignment by the system. It enables CLECs and BellSouth service reps to select and reserve telephone numbers. CLECs and BellSouth query this legacy system. • **COFFI** (Central Office Feature File Interface) – stores information about product and service offerings and availability. CLECs query this legacy system. • **DSAP** (DOE Support Application) – provides due date information. CLECs and BellSouth query this legacy system. • **HAL/CRIS** (Hands-Off Assignment Logic/Customer Record Information System) – a system used to access the Business Office Customer Record Information System (BOCRIS). It allows BellSouth servers, including LENS, access to legacy systems. CLECs query this legacy system. • **P/SIMS** (Product/Services Inventory Management system) – provides information on capacity, tariffs, inventory and service availability. CLECs query this legacy system. • **OASIS** (Obtain Available Services Information Systems) – Information on feature and rate availability. BellSouth queries this legacy system.	• Percent Response Received within 6.3 seconds: > 95% • Parity + 2 seconds

SEEM OSS Legacy Systems

System	BellSouth	CLEC
Telephone Number/Address		
RSAG-ADDR	RNS, ROS	TAG, LENS
RSAG-TN	RNS, ROS	TAG, LENS
ATLAS	RNS,ROS	TAG. LENS
Appointment Scheduling		
DSAP	RNS, ROS	TAG, LENS
CSR Data		
CRSACCTS	RNS	
CRSOCSR	ROS	
HAL/CRIS		LENS
CRSECSRL		TAG
CRSECSR		TAG
Service/Feature Availability		
OASISBIG	RNS, ROS	
PSIMS/ORB		LENS

OSS-2: Interface Availability (Pre-Ordering/Ordering)

Definition

Percent of time applications are functionally available as compared to scheduled availability. Calculations are based upon availability of applications and interfacing applications utilized by CLECs for pre-ordering and ordering. "Functional Availability" is defined as the number of hours in the reporting period that the applications/interfaces are available to users. "Scheduled Availability" is defined as the number of hours in the reporting period that the applications/interfaces are scheduled to be available.

Scheduled availability is posted on the Interconnection web site: (www.interconnection.bellsouth.com/oss/oss_hour.html)

Exclusions

- CLEC-impacting troubles caused by factors outside of BellSouth's purview, e.g., troubles in customer equipment, troubles in networks owned by telecommunications companies other than BellSouth, etc.
- Degraded service, e.g., slow response time, loss of non-critical functionality, etc.

Business Rules

This measurement captures the functional availability of applications/interfaces as a percentage of scheduled availability for the same systems. Only full outages are included in the calculations for this measure. Full outages are defined as occurrences of either of the following:

- Application/interfacing application is down or totally inoperative.
- Application is totally inoperative for customers attempting to access or use the application. This includes transport outages when they may be directly associated with a specific application.

Comparison to an internal benchmark provides a vehicle for determining whether or not CLECs and retail BST entities are given comparable opportunities for use of pre-ordering and ordering systems.

Calculation

Interface Availability (Pre-Ordering/Ordering) = (a ÷ b) X 100

- a = Functional Availability
- b = Scheduled Availability

Report Structure

- Not CLEC Specific
- Not product/service specific
- Regional Level

Data Retained

Relating to CLEC Experience	Relating to BellSouth Performance
• Report Month • Legacy Contract Type (per reporting dimension) • Regional Scope • Hours of Downtime	• Report Month • Legacy Contract Type (per reporting dimension) • Regional Scope • Hours of Downtime

SQM Disaggregation - Analog/Benchmark

SQM Level of Disaggregation	SQM Analog/Benchmark
• Regional Level	• ≥ 99.5%

OSS Interface Availability

Application	Applicable to	% Availability
EDI	CLEC	x
TAG	CLEC	x
LENS	CLEC	x
LEO	CLEC	x
LESOG	CLEC	x
LNP Gateway	CLEC	x
COG	CLEC	Under Development
SOG	CLEC	Under Development
DOM	CLEC	Under Development
DOE	CLEC/BST	x
SONGS	CLEC/BST	x
ATLAS/COFFI	CLEC/BST	x
BOCRIS	CLEC/BST	x
DSAP	CLEC/BST	x
RSAG	CLEC/BST	x
SOCS	CLEC/BST	x
CRIS	CLEC/BST	x

SEEM Measure

SEEM Measure		
Yes	Tier I	
	Tier II	X
	Tier III	

SEEM Disaggregation - Analog/Benchmark

SEEM Disaggregation	SEEM Analog/Benchmark
• Regional Level	• ≥ 99.5%

SEEM OSS Interface Availability

Application	Applicable to	% Availability
EDI	CLEC	x
HAL	CLEC	x
LENS	CLEC	x
LEO Mainframe	CLEC	x
LESOG	CLEC	x
PSIMS	CLEC	x
TAG	CLEC	x

OSS-3: Interface Availability (Maintenance & Repair)

Definition

Percent of time applications are functionally available as compared to scheduled availability. Calculations are based upon availability of applications and interfacing applications utilized by CLECs for maintenance and repair. "Functional Availability" is defined as the number of hours in the reporting period that the applications/interfaces are available to users. "Scheduled Availability" is defined as the number of hours in the reporting period that the applications/interfaces are scheduled to be available.

Scheduled availability is posted on the Interconnection web site: (www.interconnection.bellsouth.com/oss/oss_hour.html)

Exclusions

- CLEC-impacting troubles caused by factors outside of BellSouth's purview, e.g., troubles in customer equipment, troubles in networks owned by telecommunications companies other than BellSouth, etc.
- Degraded service, e.g., slow response time, loss of non-critical functionality, etc.

Business Rules

This measurement captures the functional availability of applications/interfaces as a percentage of scheduled availability for the same systems. Only full outages are included in the calculations for this measure. Full outages are defined as occurrences of either of the following:

- Application/interfacing application is down or totally inoperative.
- Application is totally inoperative for customers attempting to access or use the application. This includes transport outages when they may be directly associated with a specific application.

Comparison to an internal benchmark provides a vehicle for determining whether or not CLECs and retail BST entities are given comparable opportunities for use of maintenance and repair systems.

Calculation

OSS Interface Availability (a ÷ b) X 100

- a = Functional Availability
- b = Scheduled Availability

Report Structure

- Not CLEC Specific
- Not Product/Service Specific
- Regional Level

Data Retained

Relating to CLEC Experience	Relating to BellSouth Performance
• Availability of CLEC TAFI • Availability of LMOS HOST, MARCH, SOCS, CRIS, PREDICTOR, LNP and OSPCM • ECTA	• Availability of BellSouth TAFI • Availability of LMOS HOST, MARCH, SOCS, CRIS, PREDICTOR, LNP and OSPCM

SQM Disaggregation - Analog/Benchmark

SQM Level of Disaggregation	Retail Analog/Benchmark
• Regional Level	• ≥ 99.5%

OSS Interface Availability (M&R)

OSS Interface	% Availability
BST TAFI	x
CLEC TAFI	x
CLEC ECTA	x
BST & CLEC	x
CRIS	x
LMOS HOST	x
LNP	x
MARCH	x
OSPCM	x
PREDICTOR	x
SOCS	x

SEEM Measure

SEEM Measure		
Yes	Tier I	
	Tier II	X
	Tier III	

SEEM Disaggregation - Analog/Benchmark

SEEM Disaggregation	SEEM Analog/Benchmark
• Regional Level	• ≥ 99.5%

OSS Interface Availability (M&R)

OSS Interface	% Availability
CLEC TAFI	x
CLEC ECTA	x

OSS-4: Response Interval (Maintenance & Repair)

Definition

The response intervals are determined by subtracting the time a request is received on the BellSouth side of the interface from the time the response is received from the legacy system. Percentages of requests falling into each interval category are reported, along with the actual number of requests falling into those categories.

Exclusions

None

Business Rules

This measure is designed to monitor the time required for the CLEC and BellSouth interface system to obtain from BellSouth's legacy systems the information required to handle maintenance and repair functions. The clock starts on the date and time when the request is received on the BellSouth side of the interface and the clock stops when the response has been transmitted through that same point to the requester.

Note: The OSS Response Interval BellSouth Total Report is a combination of BellSouth Residence and Business Total.

Calculation

OSS Response Interval = (a - b)

- a = Query Response Date and Time
- b = Query Request Date and Time

Percent Response Interval (per category) = (c ÷ d) X 100

- c = Number of Response Intervals in category "X"
- d = Number of Queries Submitted in the Reporting Period

where, "X" is ≤ 4, $> 4 \leq 10$, ≥ 10, or > 30 seconds.

Report Structure

- Not CLEC Specific
- Not product/service specific
- Regional Level

Data Retained

Relating to CLEC Experience	Relating to BellSouth Performance
• CLEC Transaction Intervals	• BellSouth Business and Residential Transactions Intervals

SQM Disaggregation - Analog/Benchmark

SQM Level of Disaggregation	Retail Analog/Benchmark:
• Regional Level	• Parity

Legacy System Access Times for M&R

System	BellSouth & CLEC	Count				
		≤ 4	> 4 ≤ 10	≤ 10	> 10	> 30
CRIS	x	x	x	x	x	x
DLETH	x	x	x	x	x	x
DLR	x	x	x	x	x	x
LMOS	x	x	x	x	x	x
LMOSupd	x	x	x	x	x	x
LNP	x	x	x	x	x	x
MARCH	x	x	x	x	x	x
OSPCM	x	x	x	x	x	x
Predictor	x	x	x	x	x	x
SOCS	x	x	x	x	x	x
NIW	x	x	x	x	x	x

SEEM Measure

SEEM Measure		
No	Tier I	
	Tier II	
	Tier III	

SEEM Disaggregation - Analog/Benchmark

SEEM Disaggregation	SEEM Analog/Benchmark
• Not Applicable	• Not Applicable

PO-1: Loop Makeup - Response Time – Manual

Definition

This report measures the average interval and percent within the interval from the submission of a Manual Loop Makeup Service Inquiry (LMUSI) to the distribution of Loop Makeup information back to the CLEC.

Exclusions

- Inquiries, which are submitted electronically.
- Designated Holidays are excluded from the interval calculation.
- Weekend hours from 5:00PM Friday until 8:00AM Monday are excluded from the interval calculation.
- Canceled Inquiries.

Business Rules

The CLEC Manual Loop Makeup Service Inquiry (LMUSI) process includes inquiries submitted via mail or FAX to BellSouth's Complex Resale Support Group (CRSG).

This measurement combines three intervals:

1. From receipt of the Service Inquiry for Loop Makeup to hand off to the Service Advocacy Center (SAC) for "Look-up."
2. From SAC start date to SAC complete date.
3. From SAC complete date to date the Complex Resale Support Group (CRSG) distributes loop makeup information back to the CLEC.

The "Receive Date" is defined as the date the Manual LMUSI is received by the CRSG. It is counted as day Zero. LMU "Return Date" is defined as the date the LMU information is sent back to the CLEC from BellSouth. The interval calculation is reset to Zero when a CLEC initiated change occurs on the Manual LMU request.

Note: The Loop Make Up Service Inquiry Form does not require the CLEC to furnish the type of Loop. The CLEC determines whether the loop makeup will support the type of service they wish to order or not and qualifies the loop. If the loop makeup will support the service, a firm order LSR is submitted by the CLEC.

Calculation

Response Interval = (a - b)

- a = Date and Time LMUSI returned to CLEC
- b = Date and Time the LMUSI is received

Average Interval = (c ÷ d)

- c = Sum of all Response Intervals
- d = Total Number of LMUSIs received within the reporting period

Percent within interval = (e ÷ f) X 100

- e = Total LMUSIs received within the interval
- f = Total Number of LMUSIs processed within the reporting period

Report Structure

- CLEC Aggregate
- CLEC Specific
- Geographic Scope
  - State
  - Region
- Interval for manual LMUs:
  0 – 1 day
  >1 – 2 days
  >2 – 3 days
  0 - ≤ 3 days
  >3 – 6 days

>6 – 10 days
> 10 days
- Average Interval in days

Data Retained

Relating to CLEC Experience	Relating to BellSouth Experience
• Report Month • Total Number of Inquiries • SI Intervals • State and Region	• Not Applicable

SQM Disaggregation - Analog/Benchmark

SQM Level of Disaggregation	Retail Analog/Benchmark
• Loops	Benchmark • 95% in 3 Business Days

SEEM Measure

SEEM Measure		
Yes	Tier I	X
	Tier II	X
	Tier III	

SEEM Disaggregation - Analog/Benchmark

SEEM Disaggregation	SEEM Analog/Benchmark
• Loops	Benchmark • 95% in 3 Business Days

PO-2: Loop Make Up - Response Time - Electronic

Definition

This report measures the average interval and the percent within the interval from the electronic submission of a Loop Makeup Service Inquiry (LMUSI) to the distribution of Loop Makeup information back to the CLEC.

Exclusions

- Manually submitted inquiries.
- Designated Holidays are excluded from the interval calculation.
- Canceled Requests.
- Scheduled OSS Maintenance.

Business Rules

The response interval starts when the CLEC's Mechanized Loop Makeup Service Inquiry (LMUSI) is submitted electronically through the Operational Support Systems interface, LENS, TAG or RoboTAG. It ends when BellSouth's Loop Facility Assignment and Control System (LFACS) responds electronically to the CLEC with the requested Loop Makeup data via LENS, TAG or RoboTAG Interfaces.

Note: The Loop Make Up Service Inquiry Form does not require the CLEC to furnish the type of Loop. The CLEC determines whether the loop makeup will support the type of service they wish to order or not and qualifies the loop. If the loop makeup will support the service, a firm order LSR is submitted by the CLEC. EDI is not a pre-ordering system, and, therefore, is not applicable in this measure.

Calculation

Response Interval = (a - b)

- a = Date and Time LMUSI returned to CLEC
- b = Date and Time the LMUSI is received

Average Interval = (c ÷ d)

- c = Sum of all response intervals
- d = Total Number of LMUSIs received within the reporting period

Percent within interval = (e ÷ f) X 100

- e = Total LMUSIs received within the interval
- f = Total Number of LMUSIs processed within the reporting period

Report Structure

- CLEC Aggregate
- CLEC Specific
- Geographic Scope
  - State
  - Region
- Interval for electronic LMUs:
  0 – 1 minute
  >1 – 5 minutes
  0 - ≤ 5 minutes
  > 5 – 8 minutes
  > 8 – 15 minutes
  > 15 minutes
- Average Interval in minutes

Data Retained

Relating to CLEC Experience	Relating to BellSouth Experience
• Report Month • Legacy Contract • Response Interval • Regional Scope	• Not Applicable

SQM Disaggregation - Analog/Benchmark

SQM LEVEL of Disaggregation	Retail Analog/Benchmark
• Loops	Benchmark • 90% in 5 Minutes (05/01/01) • 95% in 1 Minute (08/01/01)

SEEM Measure

SEEM Measure		
Yes	Tier I	X
	Tier II	X
	Tier III	

SEEM Disaggregation - Analog/Benchmark

SEEM Disaggregation	SEEM Analog/Benchmark
• Loop	• 90% in 5 Minutes (05/01/01) • 95% in 1 Minute (08/01/01)

Section 2: Ordering

O-1: Acknowledgement Message Timeliness

Definition

This measurement provides the response interval from the time an LSR or transmission (may contain multiple LSRs from one or more CLECs in multiple states) is electronically submitted via EDI or TAG respectively until an acknowledgement notice is sent by the system.

Exclusions

- Scheduled OSS Maintenance

Business Rules

The process includes EDI & TAG system functional acknowledgements for all messages/Local Service Requests (LSRs) which are electronically submitted by the CLEC. Users of EDI may package many LSRs into one transmission which will receive the acknowledgement message. EDI users may place multiple LSRs in one "envelope" requesting service in one or more states which will mask the identity of the state and CLEC. The start time is the receipt time of the message at BellSouth's side of the interface (gateway). The end time is when the acknowledgement is transmitted by BellSouth at BellSouth's side of the interface (gateway). If more than one CLEC uses the same ordering center (aggregator), an Acknowledgement Message will be returned to the "Aggregator". However, BellSouth will not be able to determine which specific CLEC or state this message represented.

Calculation

Response Interval = (a - b)

- a = Date and Time Acknowledgement Notices returned to CLEC
- b = Date and Time messages/LSRs electronically submitted by the CLEC via EDI or TAG respectively

Average Response Interval = (c ÷ d)

- c = Sum of all Response Intervals
- d = Total number of electronically submitted messages/LSRs received, from CLECs via EDI or TAG respectively, in the Reporting Period.

Reporting Structure

- CLEC Aggregate
- CLEC Specific/Aggregator
- Geographic Scope
  - Region
- Electronically Submitted LSRs
  0 – ≤10 minutes
  >10 – ≤20 minutes
  >20 – ≤30 minutes
  0 – ≤ 30 minutes
  >30 – ≤45 minutes
  >45 – ≤60 minutes
  >60 – ≤120 minutes
  >120 minutes
- Average interval for electronically submitted messages/LSRs in minutes

Data Retained

Relating to CLEC Experience	Relating to BellSouth Experience
• Report month • Record of functional acknowledgements	• Not Applicable

SQM Disaggregation - Analog/Benchmark

SQM LEVEL of Disaggregation	Retail Analog/Benchmark
• EDI	• EDI - 90% within 30 minutes (05/01/01) - 95% within 30 minutes (08/01/01)
• TAG	• TAG – 95% within 30 minutes

SEEM Measure

SEEM Measure		
Yes	Tier I	X
	Tier II	X
	Tier III	

SEEM Disaggregation - Analog/Benchmark

SEEM Disaggregation	SEEM Analog/Benchmark
• EDI	• EDI - 90% within 30 minutes (05/01/01) - 95% within 30 minutes (08/01/01)
• TAG	• TAG – 95% within 30 minutes

O-2: Acknowledgement Message Completeness

Definition

This measurement provides the percent of transmissions/LSRs received via EDI or TAG respectively, which are acknowledged electronically.

Exclusions

- Manually submitted LSRs
- Scheduled OSS Maintenance

Business Rules

EDI and TAG send Functional Acknowledgements for all transmissions/LSRs, which are electronically submitted by a CLEC. Users of EDI may package many LSRs from multiple states in one transmission. If more than one CLEC uses the same ordering center, an Acknowledgement Message will be returned to the "Aggregator", however, BellSouth will not be able to determine which specific CLEC this message represented. The Acknowledgement Message is returned prior to the determination of whether the transmission/ LSR will be partially mechanized or fully mechanized.

Calculation

Acknowledgement Completeness = (a ÷ b) X 100

- a = Total number of Functional Acknowledgements returned in the reporting period for transmissions/LSRs electronically submitted by EDI or TAG respectively
- b = Total number of electronically submitted transmissions/LSRs received in the reporting period by EDI or TAG respectively

Report Structure

- CLEC Aggregate
- CLEC Specific/Aggregator
- Geographic Scope
  - Region

Note: The Order calls for Mechanized, Partially Mechanized, and Totally Mechanized, however, the Acknowledgement message is generated before the system recognizes whether this electronic transmission will be partially or fully mechanized.

Data Retained

Relating to CLEC Experience	Relating to BellSouth Experience
• Report Month • Record of Functional Acknowledgements	• Not Applicable

SQM Disaggregation - Analog/Benchmark

SQM LEVEL of Disaggregation	Retail Analog/Benchmark
• EDI • TAG	• Benchmark: 100%

SEEM Measure

SEEM Measure		
Yes	Tier I	X
	Tier II	X
	Tier III	

SEEM Disaggregation - Analog/Benchmark

SEEM Disaggregation	SEEM Analog/Benchmark
• EDI • TAG	• Benchmark: 100%

O-3: Percent Flow-Through Service Requests (Summary)

Definition

The percentage of Local Service Requests (LSR) and LNP Local Service Requests (LNP LSRs) submitted electronically via the CLEC mechanized ordering process that flow through and reach a status for a FOC to be issued, without manual intervention.

Exclusions

- Fatal Rejects
- Auto Clarification
- Manual Fallout
- CLEC System Fallout
- Scheduled OSS Maintenance

Business Rules

The CLEC mechanized ordering process includes all LSRs, including supplements (subsequent versions) which are submitted through one of the three gateway interfaces (TAG, EDI and LENS), that flow through and reach a status for a FOC to be issued, without manual intervention. These LSRs can be divided into two classes of service: Business and Residence, and two types of service: Resale, and Unbundled Network Elements (UNE). The CLEC mechanized ordering process does not include LSRs which are submitted manually (for example, fax and courier) or are not designed to flow through (for example, Manual Fallout.)

Definitions:

Fatal Rejects: Errors that prevent an LSR, submitted electronically by the CLEC, from being processed further. When an LSR is submitted by a CLEC, LEO/LNP Gateway will perform edit checks to ensure the data received is correctly formatted and complete. For example, if the PON field contains an invalid character, LEO/LNP Gateway will reject the LSR and the CLEC will receive a Fatal Reject.

Auto-Clarification: Clarifications that occur due to invalid data within the LSR. LESOG/LAUTO will perform data validity checks to ensure the data within the LSR is correct and valid. For example, if the address on the LSR is not valid according to RSAG, or if the LNP is not available for the NPA NXXX requested, the CLEC will receive an Auto-Clarification.

Manual Fallout: Planned Fallout that occur by design. Certain LSRs are designed to fallout of the Mechanized Order Process due to their complexity. These LSRs are manually processed by the LCSC. When a CLEC submits an LSR, LESOG/LAUTO will determine if the LSR should be forwarded to LCSC for manual handling. Following are the categories for Manual Fallout:

1. Complex*
2. Special pricing plans
3. Some Partial migrations
4. New telephone number not yet posted to BOCRIS
5. Pending order review required
6. CSR inaccuracies such as invalid or missing CSR data in CRIS
7. Expedites (requested by the CLEC)
8. Denials-restore and conversion, or disconnect and conversion orders
9. Class of service invalid in certain states with some types of service
10. Low volume such as activity type “T” (move)
11. More than 25 business lines, or more than 15 loops
12. Transfer of calls option for the CLEC end users
13. Directory Listings (Indentions and Captions)

*See LSR Flow-Through Matrix following O-6 for a list of services, including complex services, and whether LSRs issued for the services are eligible to flow through.

Total System Fallout: Errors that require manual review by the LSCS to determine if the error is caused by the CLEC, or is due to BellSouth system functionality. If it is determined the error is caused by the CLEC, the LSR will be sent back to the CLEC for clarification. If it is determined the error is BellSouth caused, the LCSC representative will correct the error, and the LSR will continue to be processed.

Z Status: LSRs that receive a supplemental LSR submission prior to final disposition of the original LSR.

Calculation

Percent Flow Through = a ÷ [b - (c + d + e + f)] X 100

- a = The total number of LSRs that flow through LESOG/LAUTO and reach a status for a FOC to be issued
- b = the number of LSRs passed from LEO/LNP Gateway to LESOG/LAUTO
- c = the number of LSRs that fall out for manual processing
- d = the number of LSRs that are returned to the CLEC for clarification
- e = the number of LSRs that contain errors made by CLECs
- f = the number of LSRs that receive a Z status.

Percent Achieved Flow Through = a ÷ [b-(c+d+e)] X 100

- a = the number of LSRs that flow through LESOG/LAUTO and reach a status for a FOC to be issued.
- b = the number of LSRs passed from LEO/LNP Gateway to LESOG/LAUTO
- c = the number of LSRs that are returned to the CLEC for clarification
- d = the number of LSRs that contain errors made by CLECs
- e = the number of LSRs that receive Z status

Report Structure

- CLEC Aggregate
  - Region

Data Retained

Relating to CLEC Experience	Relating to BellSouth Performance:
• Report Month • Total Number of LSRs Received, by Interface, by CLEC - TAG - EDI - LENS • Total Number of Errors by Type, by CLEC - Fatal Rejects - Auto Clarification - CLEC Caused System Fallout • Total Number of Errors by Error Code • Total Fallout for Manual Processing	• Report Month • Total Number of Errors By Type - Bellsouth System Error

SQM Disaggregation - Analog/Benchmark

SQM Level of Disaggregation	Retail Analog/Benchmark[a]
• Residence	• Benchmark: 95%
• Business	• Benchmark: 90%
• UNE	• Benchmark: 85%
• LNP	• Benchmark: 85%

a. Benchmarks do not apply to the "Percent Achieved Flow Through."

SEEM Measure

SEEM Measure		
Yes	Tier I	
	Tier II	X
	Tier III	

SEEM Disaggregation - Analog/Benchmark

SEEM Disaggregation	SEEM Analog/Benchmark[a]
• Residence	• Benchmark: 95%
• Business	• Benchmark: 90%
• UNE	• Benchmark: 85%
• LNP	• Benchmark: 85%

a. Benchmarks do not apply to the "Percent Achieved Flow Through."

O-4: Percent Flow-Through Service Requests (Detail)

Definition

A detailed list, by CLEC, of the percentage of Local Service Requests (LSR) and LNP Local Service Requests (LNP LSRs) submitted electronically via the CLEC mechanized ordering process that flow through and reach a status for a FOC to be issued, without manual or human intervention.

Exclusions

- Fatal Rejects
- Auto Clarification
- Manual Fallout
- CLEC System Fallout
- Scheduled OSS Maintenance

Business Rules

The CLEC mechanized ordering process includes all LSRs, including supplements (subsequent versions) which are submitted through one of the three gateway interfaces (TAG, EDI, and LENS), that flow through and reach a status for a FOC to be issued, without manual intervention. These LSRs can be divided into two classes of service: Business and Residence, and three types of service: Resale, and Unbundled Network Elements (UNE). The CLEC mechanized ordering process does not include LSRs, which are submitted manually (for example, fax and courier) or are not designed to flow through (for example, Manual Fallout.)

Definitions:

Fatal Rejects: Errors that prevent an LSR, submitted electronically by the CLEC, from being processed further. When an LSR is submitted by a CLEC, LEO/LNP Gateway will perform edit checks to ensure the data received is correctly formatted and complete. For example, if the PON field contains an invalid character, LEO/LNP Gateway will reject the LSR and the CLEC will receive a Fatal Reject.

Auto-Clarification: Clarifications that occur due to invalid data within the LSR. LESOG/LAUTO will perform data validity checks to ensure the data within the LSR is correct and valid. For example, if the address on the LSR is not valid according to RSAG, or if the LNP is not available for the NPA NXXX requested, the CLEC will receive an Auto-Clarification.

Manual Fallout: Planned Fallout that occur by design. Certain LSRs are designed to fallout of the Mechanized Order Process due to their complexity. These LSRs are manually processed by the LCSC. When a CLEC submits an LSR, LESOG/LAUTO will determine if the LSR should be forwarded to LCSC for manual handling. Following are the categories for Manual Fallout:

1. Complex*
2. Special pricing plans
3. Some Partial migrations
4. New telephone number not yet posted to BOCRIS
5. Pending order review required
6. CSR inaccuracies such as invalid or missing CSR data in CRIS
7. Expedites (requested by the CLEC)
8. Denials-restore and conversion, or disconnect and conversion orders
9. Class of service invalid in certain states with some types of service
10. Low volume such as activity type “T” (move)
11. More than 25 business lines, or more than 15 loops
12. Transfer of calls option for the CLEC end users
13. Directory Listings (Indentions and Captions)

*See LSR Flow-Through Matrix following O-6 for a list of services, including complex services, and whether LSRs issued for the services are eligible to flow through.

Total System Fallout: Errors that require manual review by the LSCS to determine if the error is caused by the CLEC, or is due to BellSouth system functionality. If it is determined the error is caused by the CLEC, the LSR will be sent back to the CLEC for clarification. If it is determined the error is BellSouth caused, the LCSC representative will correct the error, and the LSR will continue to be processed.

Z Status: LSRs that receive a supplemental LSR submission prior to final disposition of the original LSR.

Calculation

Percent Flow Through = a ÷ [b - (c + d + e + f)] X 100

- a = The total number of LSRs that flow through LESOG/LAUTO and reach a status for a FOC to be issued
- b = the number of LSRs passed from LEO/LNP Gateway to LESOG/LAUTO
- c = the number of LSRs that fall out for manual processing
- d = the number of LSRs that are returned to the CLEC for clarification
- e = the number of LSRs that contain errors made by CLECs
- f = the number of LSRs that receive a Z status.

Percent Achieved Flow Through = a ÷ [b-(c+d+e)] X 100

- a = the number of LSRs that flow through LESOG/LAUTO and reach a status for a FOC to be issued.
- b = the number of LSRs passed from LEO/LNP Gateway to LESOG/LAUTO
- c = the number of LSRs that are returned to the CLEC for clarification
- d = the number of LSRs that contain errors made by CLECs
- e = the number of LSRs that receive Z status

Report Structure

Provides the flow through percentage for each CLEC (by alias designation) submitting LSRs through the CLEC mechanized ordering process. The report provides the following:

- CLEC (by alias designation)
- Number of fatal rejects
- Mechanized interface used
- Total mechanized LSRs
- Total manual fallout
- Number of auto clarifications returned to CLEC
- Number of validated LSRs
- Number of BellSouth caused fallout
- Number of CLEC caused fallout
- Number of Service Orders Issued
- Base calculation
- CLEC error excluded calculation

Data Retained

Relating to CLEC Experience	Relating to BellSouth Performance
• Report Month • Total Number of LSRs Received, by Interface, by CLEC - TAG - EDI - LENS • Total Number of Errors by Type, by CLEC - Fatal Rejects - Auto Clarification - CLEC Errors • Total Number of Errors by Error Code • Total Fallout for Manual Processing	• Report Month • Total Number of Errors by Type - Bellsouth System Error

SQM Disaggregation - Analog/Benchmark

SQM Level of Disaggregation	Retail Analog/Benchmark[a]
• Residence	• Benchmark: 95%

SQM Level of Disaggregation	Retail Analog/Benchmark[a]
• Business	• Benchmark: 90%
• UNE	• Benchmark: 85%
• LNP	• Benchmark: 85%

a. Benchmarks do not apply to the "Percent Achieved Flow Through."

SEEM Measure

SEEM Measure		
Yes	Tier I	X
	Tier II	
	Tier III	

SEEM Disaggregation - Analog/Benchmark

SEEM Disaggregation	SEEM Analog/Benchmark[a]
• Residence	• Benchmark: 95%
• Business	• Benchmark: 90%
• UNE	• Benchmark: 85%
• LNP	• Benchmark: 85%

a. Benchmarks do not apply to the "Percent Achieved Flow Through."

O-5: Flow-Through Error Analysis

Definition

An analysis of each error type (by error code) that was experienced by the LSRs that did not flow through or reached a status for a FOC to be issued.

Exclusions

Each Error Analysis is error code specific, therefore exclusions are not applicable.

Business Rules

The CLEC mechanized ordering process includes all LSRs, including supplements (subsequent versions) which are submitted through one of the three gateway interfaces (TAG, EDI, and LENS), that flow through and reach a status for a FOC to be issued. The CLEC mechanized ordering process does not include LSRs which are submitted manually (for example, fax and courier).

Calculation

Total for each error type.

Report Structure

Provides an analysis of each error type (by error code). The report is in descending order by count of each error code and provides the following:

- Error Type (by error code)
- Count of each error type
- Percent of each error type
- Cumulative percent
- Error Description
- CLEC Caused Count of each error code
- Percent of aggregate by CLEC caused count
- Percent of CLEC caused count
- BellSouth Caused Count of each error code
- Percent of aggregate by BellSouth caused count
- Percent of BellSouth by BellSouth caused count.

Data Retained

Relating to CLEC Experience	Relating to BellSouth Performance
• Report Month • Total Number of LSRs Received • Total Number of Errors by Type (by error code) - CLEC Caused Error	• Report Month • Total Number of Errors by Type (by error code) - BellSouth System Error

SQM Disaggregation - Analog/Benchmark

SQM Level of Disaggregation	Retail Analog/Benchmark
• Not Applicable	• Not Applicable

SEEM Measure

SEEM Measure		
No	Tier I	
	Tier II	
	Tier III	

SEEM Disaggregation - Analog/Benchmark

SEEM Disaggregation	SEEM Analog/Benchmark
• Not Applicable	• Not Applicable

O-6: CLEC LSR Information

Definition

A list with the flow through activity of LSRs by CC, PON and Ver, issued by each CLEC during the report period.

Exclusions

- Fatal Rejects
- LSRs submitted manually

Business Rules

The CLEC mechanized ordering process includes all LSRs, including supplements (subsequent versions) which are submitted through one of the three gateway interfaces (TAG, EDI, and LENS), that flow through and reach a status for a FOC to be issued. The CLEC mechanized ordering process does not include LSRs which are submitted manually (for example, fax and courier).

Calculation

NA

Report Structure

Provides a list with the flow through activity of LSRs by CC, PON and Ver, issued by each CLEC during the report period with an explanation of the of the columns and content. This report is available on a CLEC specific basis. The report provides the following for each LSR.

- CC
- PON
- Ver
- Timestamp
- Type
- Err #
- Note or Error Description

Data Retained

Relating to CLEC Experience	Relating to BellSouth Experience
• Report Month • Record of LSRs Received by CC, PON and Ver • Record of Timestamp, Type, Err # and Note or Error Description for each LSR by CC, PON and Ver	• Not Applicable

SQM Disaggregation - Analog/Benchmark

SQM Level of Disaggregation	Retail Analog/Benchmark
• Not Applicable	• Not Applicable

SEEM Measure

SEEM Measure		
No	Tier I	
	Tier II	
	Tier III	

SEEM Disaggregation - Analog/Benchmark

SEEM Disaggregation	SEEM Analog/Benchmark
• Not Applicable	• Not Applicable

LSR Flow-Through Matrix

PRODUCT	F/T[3]	COM PLEX SERVICE	COM PLEX ORDER	PLANNED FALLOUT FOR MANUAL HANDLING[1]	EDI	TAG[2]	LENS[4]	COMMENTS
2 wire analog DID trunk port	No	UNE	Yes	NA	N	N	N	
2 wire analog port	Yes	UNE	No	No	Y	Y	N	
2 wire ISDN digital line side port	No	UNE	Yes	NA	N	N	N	
2 wire ISDN digital loop	Yes	UNE	Yes	No	Y	Y	N	
3 Way Calling	Yes	No	No	No	Y	Y	Y	
4 wire analog voice grade loop	Yes	UNE	Yes	No	Y	Y	N	
4 wire DS0 & PRI digital loop	No	UNE	Yes	NA	N	N	N	
4 wire DS1 & PRI digital loop	No	UNE	Yes	NA	N	N	N	
4 wire ISDN DSI digital trunk ports	No	UNE	Yes	NA	N	N	N	
Accupulse	No	Yes	Yes	NA	N	N	N	
ADSL	Yes	UNE	No	No	Y	Y	N	
Area Plus	Yes	No	No	No	Y	Y	Y	
Basic Rate ISDN	No	Yes	Yes	Yes	Y	Y	N	
Call Block	Yes	No	No	No	Y	Y	Y	
Call Forwarding-Variable	Yes	No	No	No	Y	Y	Y	
Call Return	Yes	No	No	No	Y	Y	Y	
Call Selector	Yes	No	No	No	Y	Y	Y	
Call Tracing	Yes	No	No	No	Y	Y	Y	
Call Waiting	Yes	No	No	No	Y	Y	Y	
Call Waiting Deluxe	Yes	No	No	No	Y	Y	Y	
Caller ID	Yes	No	No	No	Y	Y	Y	
CENTREX	No	Yes	Yes	NA	N	N	N	
DID WITH PBX ACT W	No	Yes	Yes	Yes	Y	N	Y	
DID ACT W	No	Yes	Yes	Yes	Y	N	Y	
Digital Data Transport	No	UNE	Yes	NA	N	N	N	
Directory Listing Indentions	No	No	No	Yes	Y	Y	Y	
Directory Listings Captions	No	No	Yes	Yes	Y	Y	Y	
Directory Listings (simple)	Yes	No	No	No	Y	Y	Y	
DS3	No	UNE	Yes	NA	N	N	N	
DS1 Loop	Yes	UNE	Yes	No	Y	Y	N	

LSR Flow-Through Matrix

PRODUCT	F/T[3]	COM PLEX SERVICE	COM PLEX ORDER	PLANNED FALLOUT FOR MANUAL HANDLING[1]	EDI	TAG[2]	LENS[4]	COMMENTS
DSO Loop	Yes	UNE	Yes	No	Y	Y	N	
Enhanced Caller ID	Yes	No	No	No	Y	Y	Y	
ESSX	No	Yes	Yes	NA	N	N	N	
Flat Rate/Business	Yes	No	No	No	Y	Y	Y	
Flat Rate/Residence	Yes	No	No	No	Y	Y	Y	
FLEXSERV	No	Yes	Yes	NA	N	N	N	
Frame Relay	No	Yes	Yes	NA	N	N	N	
FX	No	Yes	Yes	NA	N	N	N	
Ga. Community Calling	Yes	No	No	No	Y	Y	Y	
HDSL	Yes	UNE	No	No	Y	Y	N	
Hunting MLH	No	C/S[4]	C/S	Yes	Y	Y	N	
Hunting Series Completion	Yes	C/S	C/S	No	Y	Y	Y	
INP to LNP Conversions	No	UNE	Yes	Yes	Y	Y	N	
LightGate	No	Yes	Yes	NA	N	N	N	
Line Sharing	Yes	UNE	No	No	Y	Y	N	
Local Number Portability	Yes	UNE	Yes	No	Y	Y	N	
LNP with Complex Listing	No	UNE	Yes	Yes	Y	Y	N	
LNP with Partial Migration	No	UNE	Yes	Yes	Y	Y	N	
LNP with Complex Services	No	UNE	Yes	Yes	Y	Y	N	
Loop+INP	Yes	UNE	No	No	Y	Y	N	
Loop+LNP	Yes	UNE	No	No	Y	Y	N	
Measured Rate/Bus.	Yes	No	No	No	Y	Y	Y	
Measured Rate/Res.	Yes	No	No	No	Y	Y	Y	
Megalink	No	Yes	Yes	NA	N	N	N	
Megalink-T1	No	Yes	Yes	NA	N	N	N	
Memory Call	Yes	No	No	No	Y	Y	Y	
Memory Call Ans. Svc.	Yes	No	No	No	Y	Y	Y	
Multiserv	No	Yes	Yes	NA	N	N	N	
Native Mode LAN Interconnection (NMLI)	No	Yes	Yes	NA	N	N	N	
Off-Prem Stations	No	Yes	Yes	NA	N	N	N	
Optional Calling Plan	Yes	No	No	No	Y	Y	Y	

LSR Flow-Through Matrix

PRODUCT	F/T[3]	COM PLEX SERVICE	COM PLEX ORDER	PLANNED FALLOUT FOR MANUAL HANDLING[1]	EDI	TAG[2]	LENS[4]	COMMENTS
Package/Complete Choice and area plus	Yes	No	No	No	Y	Y	Y	
Pathlink Primary Rate ISDN	No	Yes	Yes	NA	N	N	N	
Pay Phone Provider	No	No	No	NA	N	N	N	
PBX Standalone ACT A,C, D	No	Yes	Yes	Yes	Y	Y	N	
PBX Trunks	No	Yes	Yes	Yes	Y	Y	N	
Port/Loop Combo	Yes	UNE	No	No	Y	Y	Y	
Port/Loop PBX	No	No	No	Yes	Y	Y	N	
Preferred Call Forward	Yes	No	No	No	Y	Y	Y	
RCF Basic	Yes	No	No	No	Y	Y	Y	
Remote Access to CF	Yes	No	No	No	Y	Y	Y	
Repeat Dialing	Yes	No	No	No	Y	Y	Y	
Ringmaster	Yes	No	No	No	Y	Y	Y	
Smartpath	No	Yes	Yes	NA	N	N	N	
SmartRING	No	Yes	Yes	NA	N	N	N	
Speed Calling	Yes	No	No	No	Y	Y	Y	
Synchronet	No	Yes	Yes	Yes	Y	Y	N	
Tie Lines	No	Yes	Yes	NA	N	N	N	
Touchtone	Yes	No	No	No	Y	Y	Y	
Unbundled Loop-Analog 2W, SL1, SL2	Yes	UNE	No	No	Y	Y	Y	
WATS	No	Yes	Yes	NA	N	N	N	
XDSL	Yes	UNE	No	No	Y	Y	N	
XDSL Extended LOOP	No	UNE	Yes	NA	N	N	N	
Collect Call Block	Yes	No	No	No	Y	Y	Y	
900 Call Block	Yes	No	No	No	Y	Y	Y	
3rd Party Call Block	Yes	No	No	No	Y	Y	Y	
Three Way Call Block	Yes	No	No	No	Y	Y	Y	
PIC/LPIC Change	Yes	No	No	No	Y	Y	Y	
PIC/LPIC Freeze	Yes	No	No	No	Y	Y	Y	

Note[1]: Planned Fallout for Manual Handling denotes those services that are electronically submitted and are not intended to flow through due to the complexity of the service.

Note[2]: The TAG column includes those LSRs submitted via Robo TAG.

Note[3]: For all services that indicate 'No' for flow-through, the following reasons, in addition to errors or complex services, also prompt manual handling: Expedites from CLECs, special pricing plans, denials restore and conversion or disconnect and conversion both required, partial migrations (although conversions-as-is flow through for issue 9), class of service invalid in certain states with some TOS e.g. government, or cannot be changed when changing main TN on C activity, low volume e.g. activity type T=move, pending order review required, more than 25 business lines, CSR inaccuracies such as invalid or missing CSR data in CRIS, Directory listings – Indentions, Directory listings – Captions, transfer of calls option for CLEC end user – new TN not yet posted to BOCRIS. Many are unique to the CLEC environment.

Note[4]: Services with C/S in the Complex Service and/or the Complex Order columns can be either complex or simple.

Note[5]: EELs are manually ordered.

O-7: Percent Rejected Service Requests

Definition

Percent Rejected Service Request is the percent of total Local Service Requests (LSRs) received which are rejected due to error or omission. An LSR is considered valid when it is submitted by the CLEC and passes edit checks to insure the data received is correctly formatted and complete.

Exclusions

- Service Requests canceled by the CLEC prior to being rejected/clarified.
- Scheduled OSS Maintenance

Business Rules

Fully Mechanized: An LSR is considered "rejected" when it is submitted electronically but does not pass LEO edit checks in the ordering systems (EDI, LENS, TAG, LEO, LESOG) and is returned to the CLEC without manual intervention. There are two types of "Rejects" in the Mechanized category:

A **Fatal Reject** occurs when a CLEC attempts to electronically submit an LSR but required fields are either not populated or incorrectly populated and the request is returned to the CLEC before it is considered a valid LSR.

Fatal rejects are reported in a separate column, and for informational purposes ONLY. Fatal rejects are excluded from the calculation of the percent of total LSRs rejected or the total number of rejected LSRs.

An **Auto Clarification** occurs when a valid LSR is electronically submitted but rejected from LESOG because it does not pass further edit checks for order accuracy.

Partially Mechanized: A valid LSR, which is electronically submitted (via EDI, LENS, TAG) but cannot be processed electronically and "falls out" for manual handling. It is then put into "clarification" and sent back (rejected) to the CLEC.

Total Mechanized: Combination of Fully Mechanized and Partially Mechanized LSRs electronically submitted by the CLEC.

Non-Mechanized: LSRs which are faxed or mailed to the LCSC for processing and "clarified" (rejected) back to the CLEC by the BellSouth service representative.

Interconnection Trunks: Interconnection Trunks are ordered on Access Service Requests (ASRs). ASRs are submitted to and processed by the Interconnection Purchasing Center (IPC). Trunk data is reported separately.

Calculation

Percent Rejected Service Requests = (a ÷ b) X 100

- a = Total Number of Rejected Service Requests in the Reporting Period
- b = Total Number of Service Requests Received in the Reporting Period

Report Structure

- Fully Mechanized, Partially Mechanized, Total Mechanized, Non-Mechanized
- CLEC Specific
- CLEC Aggregate
- Geographic Scope
  - State
  - Region
- Product Specific Percent Rejected
- Total Percent Rejected

Data Retained

Relating to CLEC Experience	Relating to BellSouth Performance
• Report Month • Total Number of LSRs • Total Number of Rejects • State and Region • Total Number of ASRs (Trunks)	• Not Applicable

SQM Disaggregation - Analog/Benchmark

SQM Level of Disaggregation	Retail Analog/Benchmark
Mechanized, Partially Mechanized and Non-Mechanized • Resale - Residence • Resale - Business • Resale – Design (Special) • Resale PBX • Resale Centrex • Resale ISDN • LNP Standalone • INP Standalone • 2W Analog Loop Design • 2W Analog Loop Non-Design • 2W Analog Loop w/INP Design • 2W Analog Loop w/INP Non-Design • 2W Analog Loop w/LNP Design • 2W Analog Loop w/LNP Non-Design • UNE Loop + Port Combinations • Switch Ports • UNE Combination Other • UNE xDSL (ADSL, HDSL, UCL) • Line Sharing • UNE ISDN Loop • UNE Other Design • UNE Other Non-Design • Local Interoffice Transport • Local Interconnection Trunks	• Diagnostic

SEEM Measure

SEEM Measure		
No	Tier I	
	Tier II	
	Tier III	

SEEM Disaggregation - Analog/Benchmark

SEEM Disaggregation	SEEM Analog/Benchmark
• Not Applicable	• Not Applicable

O-8: Reject Interval

Definition

Reject Interval is the average reject time from receipt of an LSR to the distribution of a Reject. An LSR is considered valid when it is submitted by the CLEC and passes edit checks to insure the data received is correctly formatted and complete.

Exclusions

- Service Requests canceled by CLEC prior to being rejected/clarified.
- Designated Holidays are excluded from the interval calculation.
- LSRs which are identified and classified as "Projects"
- The following hours for Partially mechanized and Non-mechanized LSRs are excluded from the interval calculation:

  Residence Resale Group – Monday through Saturday 7:00PM until 7:00AM
  From 7:00 PM Saturday until 7:00 AM Monday

  Business Resale, Complex, UNE Groups – Monday through Friday 6:00PM until 8:00AM
  From 6:00 PM Friday until 8:00 AM Monday.

  The hours excluded will be altered to reflect changes in the Center operating hours. The LCSC will accept faxed LSRs only during posted hours of operation.

  The interval will be the amount of time accrued from receipt of the LSR until normal closing of the center if an LSR is worked using overtime hours.

  In the case of a Partially Mechanized LSR received and worked after normal business hours, the interval will be set at one (1) minute.
- Scheduled OSS Maintenance

Business Rules

Fully Mechanized: The elapsed time from receipt of a valid electronically submitted LSR (date and time stamp in EDI, LENS or TAG) until the LSR is rejected (date and time stamp or reject in EDI, TAG or LENS). Auto Clarifications are considered in the Fully Mechanized category.

Partially Mechanized: The elapsed time from receipt of a valid electronically submitted LSR (date and time stamp in EDI, LENS or TAG) until it falls out for manual handling. The stop time on partially mechanized LSRs is when the LCSC Service Representative clarifies the LSR back to the CLEC via LENS, EDI, or TAG.

Total Mechanized: Combination of Fully Mechanized and Partially Mechanized LSRs which are electronically submitted by the CLEC.

Non-Mechanized: The elapsed time from receipt of a valid LSR (date and time stamp of FAX or date and time mailed LSR is received in the LCSC) until notice of the reject (clarification) is returned to the CLEC via LON.

Interconnection Trunks: Interconnection Trunks are ordered on Access Service Requests (ASRs). ASRs are submitted to and processed by the Local Interconnection Service Center (LISC). Trunk data is reported separately. All interconnection trunks are counted in the non-mechanized category.

Calculation

Reject Interval = (a - b)

- a = Date and Time of Service Request Rejection
- b = Date and Time of Service Request Receipt

Average Reject Interval = (c ÷ d)

- c = Sum of all Reject Intervals
- d = Number of Service Requests Rejected in Reporting Period

Report Structure

- CLEC Specific
- CLEC Aggregate

- Fully Mechanized, Partially Mechanized, Total Mechanized, Non-Mechanized
- Geographic Scope
  - State
  - Region
- Mechanized:
  0 - ≤ 4 minutes
  >4 - ≤ 8 minutes
  >8 - ≤ 12 minutes
  >12 - ≤ 60 minutes
  0 - ≤ 1 hour
  >1 - ≤ 4 hours
  >4 - ≤ 8 hours
  >8 - ≤ 12 hours
  >12 - ≤ 16 hours
  >16 - ≤ 20 hours
  >20 - ≤ 24 hours
  >24 hours
- Partially Mechanized:
  0 - ≤ 1 hour
  >1 - ≤ 4 hours
  >4 - ≤ 8 hours
  >8 - ≤ 10 hours
  0 - ≤ 10 hours
  >10 - ≤ 18 hours
  0 - ≤ 18 hours
  >18 - ≤ 24 hours
  >24 hours
- Non-mechanized:
  0 - ≤ 1 hour
  >1 - ≤ 4 hours
  >4 - ≤ 8 hours
  >8 - ≤ 12 hours
  >12 - ≤ 16 hours
  >16 - ≤ 20 hours
  >20 - ≤ 24 hours
  0 - ≤ 24 hours
  > 24 hours
- Trunks:
  ≤ 4 days
  >4 - ≤ 8 days
  >8 - ≤ 12 days
  >12 - ≤ 14 days
  >14 - ≤ 20 days
  >20 days

Data Retained

Relating to CLEC Experience	Relating to BellSouth Performance
Report Month • Reject Interval • Total Number of LSRs • Total Number of Rejects • State and Region • Total Number of ASRs (Trunks)	• Not Applicable

SQM Disaggregation - Analog/Benchmark

SQM Level of Disaggregation	Retail Analog/Benchmark
• Resale – Residence • Resale – Business • Resale – Design (Special) • Resale PBX • Resale Centrex • Resale ISDN • LNP Standalone • INP Standalone • 2W Analog Loop Design • 2W Analog Loop Non-Design • 2W Analog Loop w/INP Design • 2W Analog Loop w/INP Non-Design • 2W Analog Loop w/LNP Design • 2W Analog Loop w/LNP Non-Design • UNE Loop + Port Combinations • Switch Ports • UNE Combination Other • UNE xDSL (ADSL, HDSL, UCL) • Line Sharing • UNE ISDN Loops • UNE Other Non-Design • Local Interoffice Transport • UNE Other Design	• Mechanized: - 97% within I Hour • Partially Mechanized: - 85% within 24 hours - 85% within 18 Hours (05/01/01) - 85% within 10 Hours (08/01/01) • Non-Mechanized: - 85% within 24 hours
• Local Interconnection Trunks	• Trunks: - 85% within 4 Days

SEEM Measure

SEEM Measure		
Yes	Tier I	X
	Tier II	X
	Tier III	

SEEM Disaggregation - Analog/Benchmark

SEEM Disaggregation	SEEM Analog/Benchmark
• Fully Mechanized	• 97% $\leq$ 1 hour
• Partially Mechanized	• 85% within 24 hours • 85% within 18 hours (05/01/01) • 85% within 10 hours (08/01/01)
• Non-Mechanized	• 85% within 24 hours

O-9: Firm Order Confirmation Timeliness

Definition

Interval for Return of a Firm Order Confirmation (FOC Interval) is the average response time from receipt of valid LSR to distribution of a Firm Order Confirmation.

Exclusions

- Rejected LSRs
- Designated Holidays are excluded from the interval calculation.
- LSRs which are identified and classified as "Projects"
- The following hours for Partially Mechanized and Non-mechanized LSRs are excluded from the interval calculation:

  Residence Resale Group – Monday through Saturday 7:00PM until 7:00AM

  From 7:00 PM Saturday until 7:00 AM Monday.

  Business Resale, Complex, UNE Groups – Monday through Friday 6:00PM until 8:00AM

  From 6:00 PM Friday until 8:00 AM Monday.

  The hours excluded will be altered to reflect changes in the Center operating hours. The LCSC will accept faxed LSRs only during posted hours of operation.

  The interval will be the amount of time accrued from receipt of the LSR until normal closing of the center if an LSR is worked using overtime hours.

  In the case of a Partially Mechanized LSR received and worked after normal business hours, the interval will be set at one (1) minute.

- Scheduled OSS Maintenance

Business Rules

- **Fully Mechanized:** The elapsed time from receipt of a valid electronically submitted LSR (date and time stamp in EDI, LENS or TAG) until the LSR is processed, appropriate service orders are generated and a Firm Order Confirmation is returned to the CLEC via EDI, LENS or TAG.
- **Partially Mechanized:** The elapsed time from receipt of a valid electronically submitted LSR (date and time stamp in EDI, LENS, or TAG) which falls out for manual handling until appropriate service orders are issued by a BellSouth service representative via Direct Order Entry (DOE) or Service Order Negotiation Generation System (SONGS) to SOCS and a Firm Order Confirmation is returned to the CLEC via EDI, LENS, or TAG.
- **Total Mechanized:** Combination of Fully Mechanized and Partially Mechanized LSRs which are electronically submitted by the CLEC.
- **Non-Mechanized:** The elapsed time from receipt of a valid paper LSR (date and time stamp of FAX or date and time paper LSRs received in LCSC) until appropriate service orders are issued by a BellSouth service representative via Direct Order Entry (DOE) or Service Order Negotiation Generation System (SONGS) to SOCS and a Firm Order Confirmation is sent to the CLEC via LON.
- **Interconnection Trunks:** Interconnection Trunks are ordered on Access Service Requests (ASRs). ASRs are submitted to and processed by the Local Interconnection Service Center (LISC). Trunk data is reported separately.

Calculation

Firm Order Confirmation Interval = (a - b)

- a = Date & Time of Firm Order Confirmation
- b = Date & Time of Service Request Receipt)

Average FOC Interval = (c ÷ d)

- c = Sum of all FOC Intervals
- d = Total Number of Service Requests Confirmed in Reporting Period

FOC Interval Distribution (for each interval) = (e ÷ f) X 100

- e = Service Requests Confirmed in interval
- f = Total Service Requests Confirmed in the Reporting Period

Report Structure

- Fully Mechanized, Partially Mechanized, Total Mechanized, Non-Mechanized
  - CLEC Specific
  - CLEC Aggregate
- Geographic Scope
  - State
  - Region
- Fully Mechanized:
  0 - ≤ 15 minutes
  >15 - ≤ 30 minutes
  >30 - ≤ 45 minutes
  >45 - ≤ 60 minutes
  >60 - ≤ 90 minutes
  >90 - ≤ 120 minutes
  >120 - ≤ 180 minutes
  0 - ≤ 3 hours
  >3 - ≤ 6 hours
  >6 - ≤ 12 hours
  >12 - ≤ 24 hours
  >24 - ≤ 48 hours
  >48 hours
- Partially Mechanized:
  0 - ≤ 4 hours
  >4 - ≤ 8 hours
  >8 - ≤ 10 hours
  0 - ≤ 10 hours
  >10 - ≤ 18 hours
  0 - ≤ 18 hours
  >18 - ≤ 24 hours
  0 - ≤ 24 hours
  >24 - ≤ 48 hours
  >48 hours
- Non-Mechanized
  0 - ≤ 4 hours
  >4 - ≤ 8 hours
  >8 - ≤ 12 hours
  >12 - ≤ 16 hours
  >16 - ≤ 20 hours
  >20 - ≤ 24 hours
  >24 - ≤ 36 hours
  0 - ≤ 36 hours
  >36 - ≤ 48 hours
  >48 hours
- Trunks:
  0 - ≤ 5 days
  >5 - ≤ 10 days
  0 - ≤ 10 days
  >10 - ≤ 15 days
  >15 - ≤ 20 days
  >20 days

Data Retained

Relating to CLEC Experience	Relating to BellSouth Performance
• Report Month • Interval for FOC • Total Number of LSRs • State and Region • Total Number of ASRs (Trunks)	• Not Applicable

SQM Disaggregation - Analog/Benchmark

SQM Level of Disaggregation	Retail Analog/Benchmark
• Resale – Residence • Resale – Business • Resale – Design (Special) • Resale PBX • Resale Centrex • Resale ISDN • LNP Standalone • INP Standalone • 2W Analog Loop Design • 2W Analog Loop Non-Design • 2W Analog Loop w/INP Design • 2W Analog Loop w/INP Non-Design • 2W Analog Loop w/LNP Design • 2W Analog Loop w/LNP Non-Design • UNE Loop + Port Combinations • Switch Ports • UNE Combination Other • UNE xDSL (ADSL, HDSL, UCL) • Line Sharing • UNE ISDN Loops • UNE Other Design • UNE Other Non-Design • Local Interoffice Transport	• Mechanized: - 95% within 3 Hours • Partially Mechanized: - 85% within 24 hours - 85% within 18 Hours (05/01/01) - 85% within 10 Hours (08/01/01) • Non-Mechanized: - 85% within 36 hours
• Local Interconnection Trunks	• Trunks: - 95% within 10 days

SEEM Measure

SEEM Measure		
Yes	Tier I	X
	Tier II	X
	Tier III	

SEEM Disaggregation - Analog/Benchmark

SEEM Disaggregation	SEEM Analog/Benchmark
• Fully Mechanized	• 95% within 3 hours
• Partially Mechanized	• 85% within 24 hours • 85% within 18 Hours (05/01/01) • 85% within 10 Hours (08/01/01)

SEEM Disaggregation	SEEM Analog/Benchmark
• Non-Mechanized	• 85% within 36 hours
• IC Trunks	• 95% within 10 days

O-10: Service Inquiry with LSR Firm Order Confirmation (FOC) Response Time Manual[1]

Definition

This report measures the interval and the percent within the interval from the submission of a Service Inquiry (SI) with Firm Order LSR to the distribution of a Firm Order Confirmation (FOC).

Exclusions

- Designated Holidays are excluded from the interval calculation.
- Weekend hours from 5:00PM Friday until 8:00AM Monday are excluded from the interval calculation of the Service Inquiry.
- Canceled Requests
- Electronically Submitted Requests
- Scheduled OSS Maintenance

Business Rules

This measurement combines four intervals:

1. From receipt of Service Inquiry with LSR to hand off to the Service Advocacy Center (SAC) for Loop 'Look-up'.
2. From SAC start date to SAC complete date.
3. From SAC complete date to the Complex Resale Support Group (CRSG) complete date with hand off to LCSC.
4. From receipt of SI/LSR in the LCSC to Firm Order Confirmation.

Calculation

FOC Timeliness Interval = (a - b)

- a = Date and Time Firm Order Confirmation (FOC) for SI with LSR returned to CLEC
- b = Date and Time SI with LSR received

Average Interval = (c ÷ d)

- c = Sum of all FOC Timeliness Intervals
- d = Total number of SIs with LSRs received in the reporting period

Percent Within Interval = (e ÷ f) X 100

- e = Total number of Service Inquiries with LSRs received by the CRSG to distribution of FOC by the Local Carrier Service Center (LCSC)
- f = Total number of Service Inquiries with LSRs received in the reporting period

Report Structure

- CLEC Aggregate
- CLEC Specific
- Geographic Scope
  - State
  - Region
- Intervals
  0 – ≤ 3 days
  >3 – ≤ 5 days
  0 – ≤ 5 days
  >5 – ≤ 7 days
  >7 – ≤ 10 days
  >10 – ≤ 15 days
  >15 days
- Average Interval measured in days

1. See O-9 for FOC Timeliness

Data Retained

Relating to CLEC Experience	Relating to BellSouth Experience
• Report Month • Total Number of Requests • SI Intervals • State and Region	• Not Applicable

SQM Disaggregation - Analog/Benchmark

SQM LEVEL of Disaggregation	Retail Analog/Benchmark
• xDSL (includes UNE unbundled ADSL, HDSL and UNE Unbundled Copper Loops) • Unbundled Interoffice Transport	• 95% Returned within 5 Business days

SEEM Measure

SEEM Measure		
No	Tier I	
	Tier II	
	Tier III	

SEEM Disaggregation - Analog/Benchmark

SEEM Disaggregation	SEEM Analog/Benchmark
• Not Applicable	• Not Applicable

O-11: Firm Order Confirmation and Reject Response Completeness

Definition

A response is expected from BellSouth for every Local Service Request transaction (version). More than one response or differing responses per transaction is not expected. Firm Order Confirmation and Reject Response Completeness is the corresponding number of Local Service Requests received to the combination of Firm Order Confirmation and Reject Responses.

Exclusions

- Service Requests canceled by the CLEC prior to FOC or Rejected/Clarified
- Non-Mechanized LSRs
- Scheduled OSS Maintenance

Business Rules

Mechanized – The number of FOCs or Auto Clarifications sent to the CLEC from LENS, EDI, TAG in response to electronically submitted LSRs (date and time stamp in LENS, EDI, TAG).

Partially Mechanized – The number of FOCs or Rejects sent to the CLEC from LENS, EDI, TAG in response to electronically submitted LSRs (date and time stamp in LENS, EDI, TAG), which fall out for manual handling by the LCSC personnel.

Total Mechanized – The number of the combination of Fully Mechanized and Partially Mechanized LSRs

Non-Mechanized – The number of FOCs or Rejects sent to the CLEC via FAX Server in response to manually submitted LSRs (date and time stamp in FAX Server).

Note: Manual (Non-Mechanized) LSRs have no version control by the very nature of the manual process, therefore, non-mechanized LSRs are not captured by this report.

For CLEC Results:

Firm Order Confirmation and Reject Response Completeness is determined in two dimensions:

Percent responses is determined by computing the number of Firm Order Confirmations and Rejects transmitted by BellSouth and dividing by the number of Local Service Requests (all versions) received in the reporting period.

Percent of multiple responses is determined by computing the number of Local Service Request unique versions receiving more than one Firm Order Confirmation, Reject or the combination of the two and dividing by the number of Local Service Requests (all versions) received in the reporting period.

Calculation

Single FOC/Reject Response Expected

Firm Order Confirmation / Reject Response Completeness = (a ÷ b) X 100

- a = Total Number of Service Requests for which a Firm Order Confirmation or Reject is Sent
- b = Total Number of Service Requests Received in the Report Period

Multiple or Differing FOC / Reject Responses Not Expected

Response Completeness = [(a + b) ÷ c] X 100

- a = Total Number of Firm Order Confirmations Per LSR Version
- b = Total Number of Reject Responses Per LSR Version
- c = Total Number of Service Requests (All Versions) Received in the Reporting Period

Report Structure

Fully Mechanized, Partially Mechanized, Total Mechanized, Non-Mechanized

- State and Region
- CLEC Specific
- CLEC Aggregate
- BellSouth Specific

Data Retained

Relating to CLEC Experience	Relating to BellSouth Experience
Report Month • Reject Interval • Total Number of LSRs • Total Number of Rejects	• Not Applicable

SQM Disaggregation - Analog/Benchmark

SQM LEVEL of Disaggregation	Retail Analog/Benchmark
• Resale Residence • Resale Business • Resale Design • Resale PBX • Resale Centrex • Resale ISDN • LNP Standalone • INP Standalone • 2W Analog Loop Design • 2W Analog Loop Non – Design • 2W Analog Loop w/ INP Design • 2W Analog Loop w/ INP Non – Design • 2W Analog Loop w/ LNP Design • 2W Analog Loop w/ LNP Non – Design • UNE Loop and Port Combinations • Switch Ports • UNE Combination Other • UNE xDSL (ADSL, HDSL, UCL) • Line Sharing • UNE ISDN Loops • UNE Other Design • UNE Other Non - Design • Local Interoffice Transport • Local Interconnection Trunks	• 95% Returned

SEEM Measure

SEEM Measure		
Yes	Tier I	X
	Tier II	X
	Tier III	

SEEM Disaggregation - Analog/Benchmark

SEEM Disaggregation	SEEM Analog/Benchmark
• Fully Mechanized	• 95% Returned

O-12: Speed of Answer in Ordering Center

Definition

Measures the average time a customer is in queue.

Exclusions

None

Business Rules

The clock starts when the appropriate option is selected (i.e., 1 for Resale Consumer, 2 for Resale Multiline, and 3 for UNE-LNP, etc.) and the call enters the queue for that particular group in the LCSC. The clock stops when a BellSouth service representative in the LCSC answers the call. The speed of answer is determined by measuring and accumulating the elapsed time from the entry of a CLEC call into the BellSouth automatic call distributor (ACD) until a service representative in BellSouth's Local Carrier Service Center (LCSC) answers the CLEC call.

Calculation

Speed of Answer in Ordering Center = (a ÷ b)

- a = Total seconds in queue
- b = Total number of calls answered in the Reporting Period

Report Structure

Aggregate

- CLEC – Local Carrier Service Center
- BellSouth
  - Business Service Center
  - Residence Service Center

Note: Combination of Residence Service Center and Business Service Center data.

Data Retained

Relating to CLEC Experience	Relating to BellSouth Performance
• Mechanized tracking through LCSC Automatic Call Distributor	• Mechanized tracking through BellSouth Retail center support system.

SQM Disaggregation - Analog/Benchmark

SQM LEVEL of Disaggregation	Retail Analog/Benchmark
Aggregate • CLEC – Local Carrier Service Center • BellSouth - Business Service Center - Residence Service Center	• Parity with Retail

SEEM Measure

SEEM Measure		
No	Tier I	
	Tier II	
	Tier III	

SEEM Disaggregation - Analog/Benchmark

SEEM Disaggregation	SEEM Analog/Benchmark
• Not Applicable	• Not Applicable

O-13: LNP-Percent Rejected Service Requests

Definition

Percent Rejected Service Request is the percent of total Local Service Requests (LSRs) which are rejected due to error or omission. An LSR is considered valid when it is electronically submitted by the CLEC and passes LNP Gateway edit checks to insure the data received is correctly formatted and complete, i.e., fatal rejects are never accepted and, therefore, are not included.

Exclusions

- Service Requests canceled by the CLEC
- Scheduled OSS Maintenance

Business Rules

An LSR is considered "rejected" when it is submitted electronically but does not pass edit checks in the ordering systems (EDI, TAG, LNP Gateway, LAUTO) and is returned to the CLEC without manual intervention.

Fully Mechanized: There are two types of "Rejects" in the Fully Mechanized category:

A **Fatal Reject** occurs when a CLEC attempts to electronically submit an LSR (via EDI or TAG) but required fields are not populated correctly and the request is returned to the CLEC.

Fatal rejects are reported in a separate column, and for informational purposes ONLY. They are not considered in the calculation of the percent of total LSRs rejected or the total number of rejected LSRs.

An **Auto Clarification** is a valid LSR which is electronically submitted (via EDI or TAG), but is rejected from LAUTO because it does not pass further edit checks for order accuracy. Auto Clarifications are returned without manual intervention.

Partially Mechanized: A valid LSR which is electronically submitted (via EDI or TAG), but cannot be processed electronically due to a CLEC error and "falls out" for manual handling. It is then put into "clarification", and sent back (rejected) to the CLEC.

Total Mechanized: Combination of Fully Mechanized and Partially Mechanized rejects.

Non-Mechanized: A valid LSR which is faxed or mailed to the BellSouth LCSC.

Calculation

LNP-Percent Rejected Service Requests = (a ÷ b) X 100

- a = Number of Service Requests Rejected in the Reporting Period
- b = Number of Service Requests Received in the Reporting Period

Report Structure

- Fully Mechanized, Partially Mechanized, Total Mechanized, Non-Mechanized
- CLEC Specific
- CLEC Aggregate

Data Retained

Relating to CLEC Experience	Relating to BellSouth Experience
• Not Applicable	• Not Applicable

SQM Disaggregation - Analog/Benchmark

SQM LEVEL of Disaggregation	Retail Analog/Benchmark
• LNP • UNE Loop w/LNP	• Diagnostic

SEEM Measure

SEEM Measure		
No	Tier I	
	Tier II	
	Tier III	

SEEM Disaggregation - Analog/Benchmark

SEEM Disaggregation	SEEM Analog/Benchmark
• Not Applicable	• Not Applicable

O-14: LNP-Reject Interval Distribution & Average Reject Interval

Definition

Reject Interval is the average reject time from receipt of an LSR to the distribution of a Reject. An LSR is considered valid when it is electronically submitted by the CLEC and passes LNP Gateway edit checks to insure the data received is correctly formatted and complete.

Exclusions

- Service Requests canceled by the CLEC
- Designated Holidays are excluded from the interval calculation.
- LSRs which are identified and classified as "Projects".
- The following hours for Partially mechanized and Non-mechanized LSRs are excluded from the interval calculation:

  Residence Resale Group – Monday through Saturday 7:00PM until 7:00AM
  From 7:00 PM Saturday until 7:00 AM Monday

  Business Resale, Complex, UNE Groups – Monday through Friday 6:00PM until 8:00AM
  From 6:00 PM Friday until 8:00 AM Monday.

  The hours excluded will be altered to reflect changes in the Center operating hours. The LCSC will accept faxed LSRs only during posted hours of operation.

  The interval will be the amount of time accrued from receipt of the LSR until normal closing of the center if an LSR is worked using overtime hours.

  In the case of a Partially Mechanized LSR received and worked after normal business hours, the interval will be set at one (1) minute.

- Scheduled OSS Maintenance

Business Rules

The Reject interval is determined for each rejected LSR processed during the reporting period. The Reject interval is the elapsed time from when BellSouth receives LSR until that LSR is rejected back to the CLEC. Elapsed time for each LSR is accumulated for each reporting dimension. The accumulated time for each reporting dimension is then divided by the associated total number of rejected LSRs to produce the reject interval distribution.

An LSR is considered "rejected" when it is submitted electronically but does not pass edit checks in the ordering systems (EDI, TAG, LNP Gateway, LAUTO) and is returned to the CLEC without manual intervention.

Fully Mechanized: There are two types of "Rejects" in the Fully Mechanized category:

A **Fatal Reject** occurs when a CLEC attempts to electronically submit an LSR but required fields are not populated correctly and the request is returned to the CLEC.

An **Auto Clarification** is a valid LSR which is electronically submitted (via EDI or TAG), but is rejected from LAUTO because it does not pass further edit checks for order accuracy. Auto Clarifications are returned without manual intervention.

Partially Mechanized: A valid LSR which electronically submitted (via EDI or TAG), but cannot be processed electronically due to a CLEC error and "falls out" for manual handling. It is then put into "clarification", and sent back to the CLEC.

Total Mechanized: Combination of Fully Mechanized and Partially Mechanized rejects.

Non-Mechanized: A valid LSR which is faxed or mailed to the BellSouth LCSC.

Calculation

Reject Interval = (a - b)

- a = Date & Time of Service Request Rejection
- b = Date & Time of Service Request Receipt

Average Reject Interval = (c ÷ d)

- c = Sum of all Reject Intervals
- d = Total Number of Service Requests Rejected in Reporting Period

Reject Interval Distribution = (e ÷ f) X 100

- e = Service Requests Rejected in reported interval
- f = Total Number of Service Requests Rejected in Reporting Period

Report Structure

Fully Mechanized, Partially Mechanized, Total Mechanized, Non-Mechanized

- CLEC Specific
- CLEC Aggregate
- State, Region
- Fully Mechanized:
  0 - ≤ 4 minutes
  >4 - ≤ 8 minutes
  >8 - ≤ 12 minutes
  >12 - ≤ 60 minutes
  0 - ≤ 1 hour
  >1 - ≤ 4 hours
  >4 - ≤ 8 hours
  >8 - ≤ 12 hours
  >12 - ≤ 16 hours
  >16 - ≤ 20 hours
  >20 - ≤ 24 hours
  > 24 hours
- Partially Mechanized:
  0 - ≤ 1 hour
  >1 - ≤ 4 hours
  >4 - ≤ 8 hours
  >8 - ≤ 10 hours
  0 - ≤ 10 hours
  >10 - ≤ 18 hours
  0 - ≤ 18 hours
  >18 - ≤ 24 hours
  > 24 hours
- Non-Mechanized:
  0 - ≤ 1 hour
  >1 - ≤ 4 hours
  >4 - ≤ 8 hours
  >8 - ≤ 12 hours
  >12 - ≤ 16 hours
  >16 - ≤ 20 hours
  >20 - ≤ 24 hours
  0 - ≤ 24 hours
  >24 hours
- Average Interval in Days or Hours

Data Retained

Relating to CLEC Experience	Relating to BellSouth Experience
• Report Month • Reject Interval • Total Number of LSRs • Total number of Rejects • State and Region	• Not Applicable

SQM Disaggregation - Analog/Benchmark

SQM LEVEL of Disaggregation	Retail Analog/Benchmark
• LNP • UNE Loop with LNP	• Mechanized: 97% within I Hour • Partially Mechanized: 85% within 24 Hours • Partially Mechanized: 85% within 18 Hours (05/01/01) • Partially Mechanized: 85% within 10 Hours (08/01/01) • Non-Mechanized: 85% within 24 Hours

SEEM Measure

SEEM Measure		
No	Tier I	
	Tier II	
	Tier III	

SEEM Disaggregation - Analog/Benchmark

SEEM Disaggregation	SEEM Analog/Benchmark
• Not Applicable	• Not Applicable

O-15: LNP-Firm Order Confirmation Timeliness Interval Distribution & Firm Order Confirmation Average Interval

Definition

Interval for Return of a Firm Order Confirmation (FOC Interval) is the average response time from receipt of a valid LSR to distribution of a firm order confirmation.

Exclusions

- Rejected LSRs
- Designated Holidays are excluded from the interval calculation.
- LSRs which are identified and classified as "Projects".
- The following hours for Partially Mechanized and Non-mechanized LSRs are excluded from the interval calculation:

  Residence Resale Group – Monday through Saturday 7:00PM until 7:00AM

  From 7:00 PM Saturday until 7:00 AM Monday.

  Business Resale, Complex, UNE Groups – Monday through Friday 6:00PM until 8:00AM

  From 6:00 PM Friday until 8:00 AM Monday.

  The hours excluded will be altered to reflect changes in the Center operating hours. The LCSC will accept faxed LSRs only during posted hours of operation.

  The interval will be the amount of time accrued from receipt of the LSR until normal closing of the center if an LSR is worked using overtime hours.

  In the case of a Partially Mechanized LSR received and worked after normal business hours, the interval will be set at one (1) minute.

- Scheduled OSS Maintenance.

Business Rules

- **Fully Mechanized:** The elapsed time from receipt of a valid electronically submitted LSR (date and time stamp in EDI, LENS or TAG) until the LSR is processed, appropriate service orders are generated and a Firm Order Confirmation is returned to the CLEC via EDI, LENS or TAG.
- **Partially Mechanized:** The elapsed time from receipt of a valid electronically submitted LSR (date and time stamp in EDI, LENS, or TAG) which falls out for manual handling until appropriate service orders are issued by a BellSouth service representative via Direct Order Entry (DOE) or Service Order Negotiation Generation System (SONGS) to SOCS and a Firm Order Confirmation is returned to the CLEC via EDI, LENS, or TAG.
- **Total Mechanized:** Combination of Fully Mechanized and Partially Mechanized LSRs which are electronically submitted by the CLEC.
- **Non-Mechanized:** The elapsed time from receipt of a valid paper LSR (date and time stamp of FAX or date and time paper LSRs received in LCSC) until appropriate service orders are issued by a BellSouth service representative via Direct Order Entry (DOE) or Service Order Negotiation Generation System (SONGS) to SOCS and a Firm Order Confirmation is sent to the CLEC via LON.

Calculation

Firm Order Confirmation Interval = (a - b)

- a = Date & Time of Firm Order Confirmation
- b = Date & Time of Service Request Receipt)

Average FOC Interval = (c ÷ d)

- c = Sum of all FOC Intervals
- d = Total Number of Service Requests Confirmed in Reporting Period

FOC Interval Distribution (for each interval) = (e ÷ f) X 100

- e = Service Requests Confirmed in interval
- f = Total Service Requests Confirmed in the Reporting Period

Report Structure

Fully Mechanized, Partially Mechanized, Total Mechanized, Non-Mechanized

- CLEC Specific
- CLEC Aggregate
- State and Region
- Fully Mechanized:
  0 - ≤15 minutes
  >15 - ≤ 30 minutes
  >30 - ≤ 45 minutes
  >45 - ≤ 60 minutes
  >60 - ≤ 90 minutes
  >90 - ≤ 120 minutes
  >120 - ≤ 180 minutes
  0 - ≤ 3 hours
  >3 - ≤ 6 hours
  >6 - ≤ 12 hours
  >12 - ≤ 24 hours
  >24 - ≤ 48 hours
  >48 hours
- Partially Mechanized:
  0 - ≤ 4 hours
  >4 - ≤ 8 hours
  >8 - ≤ 10 hours
  0 - ≤ 10 hours
  >10 - ≤ 18 hours
  0 - ≤ 18 hours
  >18 - ≤ 24 hours
  0 - ≤ 24 hours
  >24 - ≤ 48 hours
  > 48 hours
- Non-Mechanized:
  0 - ≤ 4 hours
  >4 - ≤ 8 hours
  >8 - ≤ 12 hours
  >12 - ≤ 16 hours
  >16 - ≤ 20 hours
  >20 - ≤ 24 hours
  >24 - ≤ 36 hours
  0 - ≤ 36 hours
  >36 - ≤ 48 hours
  >48 hours

Data Retained

Relating to CLEC Experience	Relating to BellSouth Experience
Report Month • Total Number of LSRs • Total Number of FOCs • State and Region	• Not Applicable

SQM Disaggregation - Analog/Benchmark

SQM LEVEL of Disaggregation	Retail Analog/Benchmark
• LNP • UNE Loop with LNP	• Mechanized: 95% within 3 Hours • Partially Mechanized: 85% within 24 Hours • Partially Mechanized: 85% within 18 Hours (05/01/01) • Partially Mechanized: 85% within 10 Hours (08/01/01) • Non-Mechanized: 85% within 36 hours

SEEM Measure

SEEM Measure		
No	Tier I	
	Tier II	
	Tier III	

SEEM Disaggregation - Analog/Benchmark

SEEM Disaggregation	SEEM Analog/Benchmark
• Not Applicable	• Not Applicable

Section 3: Provisioning

P-1: Mean Held Order Interval & Distribution Intervals

Definition

When delays occur in completing CLEC orders, the average period that CLEC orders are held for BellSouth reasons, pending a delayed completion, should be no worse for the CLEC when compared to BellSouth delayed orders. Calculation of the interval is the total days orders are held and pending but not completed that have passed the currently committed due date; divided by the total number of held orders. This report is based on orders still pending, held and past their committed due date at the close of the reporting period. The distribution interval is based on the number of orders held and pending but not completed over 15 and 90 days. (Orders reported in the >90 day interval are also included in the >15 day interval.)

Exclusions

- Order Activities of BellSouth or the CLEC associated with internal or administrative use of local services (Record Orders, Listing Orders, Test Orders, etc.)
- Disconnect (D) & From (F) orders
- Orders with appointment code of 'A' for Rural orders.

Business Rules

Mean Held Order Interval: This metric is computed at the close of each report period. The held order interval is established by first identifying all orders, at the close of the reporting interval, that both have not been reported as completed in SOCS and have passed the currently committed due date for the order. For each such order, the number of calendar days between the earliest committed due date on which BellSouth had a company missed appointment and the close of the reporting period is established and represents the held order interval for that particular order. The held order interval is accumulated by the standard groupings, unless otherwise noted, and the reason for the order being held. The total number of days accumulated in a category is then divided by the number of held orders within the same category to produce the mean held order interval. The interval is by calendar days with no exclusions for Holidays or Sundays.

CLEC Specific reporting is by type of held order (facilities, equipment, other), total number of orders held, and the total and average days.

Held Order Distribution Interval: This measure provides data to report total days held and identifies these in categories of >15 days and > 90 days. (Orders counted in >90 days are also included in > 15 days).

Calculation

Mean Held Order Interval = a ÷ b

- a = Sum of held-over-days for all Past Due Orders Held for the reporting period
- b = Number of Past Due Orders Held and Pending But Not Completed and past the committed due date

Held Order Distribution Interval (for each interval) = (c ÷ d) X 100

- c = # of Orders Held for ≥ 15 days or # of Orders Held for ≥ 90 days
- d = Total # of Past Due Orders Held and Pending But Not Completed)

Report Structure

- CLEC Specific
- CLEC Aggregate
- BellSouth Aggregate
- Circuit Breakout < 10, ≥ 10 (except trunks)

Data Retained

Relating to CLEC Experience	Relating to BellSouth Performance
• Report month • CLEC Order Number and PON (PON) • Order Submission Date (TICKET_ID) • Committed Due Date (DD) • Service Type (CLASS_SVC_DESC) • Hold Reason • Total line/circuit count • Geographic Scope **Note**: Code in parentheses is the corresponding header found in the raw data file.	• Report month • BellSouth Order Number • Order Submission Date • Committed Due Date • Service Type • Hold Reason • Total line/circuit count • Geographic Scope

SQM Disaggregation - Analog/Benchmark

SQM LEVEL of Disaggregation	SQM Retail Analog/Benchmark
• Resale Residence	• Retail Residence
• Resale Business	• Retail Business
• Resale Design	• Retail Design
• Resale PBX	• Retail PBX
• Resale Centrex	• Retail Centrex
• Resale ISDN	• Retail ISDN
• LNP (Standalone)	• Retail Residence and Business (POTS)
• INP (Standalone)	• Retail Residence and Business (POTS)
• 2W Analog Loop Design	• Retail Residence and Business Dispatch
• 2W Analog Loop-Non-Design	• Retail Residence and Business - POTS Excluding Switch-Based Orders
• 2W Analog Loop w/LNP - Design	• Retail Residence and Business Dispatch
• 2W Analog Loop w/LNP- Non-Design	• Retail Residence and Business - POTS Excluding Switch-Based Orders
• 2W Analog Loop w/INP-Design	• Retail Residence and Business Dispatch
• 2W Analog Loop w/INP-Non-Design	• Retail Residence and Business - POTS Excluding Switch-Based Orders
• UNE Digital Loop < DS1	• Retail Digital Loop < DS1
• UNE Digital Loop ≥ DS1	• Retail Digital Loop ≥ DS1
• UNE Loop + Port Combinations	• Retail Residence and Business
• UNE Switch Ports	• Retail Residence and Business (POTS)
• UNE Combo Other	• Retail Residence, Business and Design Dispatch
• UNE xDSL (HDSL, ADSL and UCL)	• ADSL Provided to Retail
• UNE ISDN	• Retail ISDN - BRI
• UNE Line Sharing	• ADSL Provided to Retail
• UNE Other Design	• Retail Design
• UNE Other Non-Design	• Retail Residence and Business
• Local Transport (Unbundled Interoffice Transport)	• Retail DS1/DS3 Interoffice
• Local Interconnection Trunks	• Parity with Retail

SEEM Measure

SEEM Measure		
No	Tier I	
	Tier II	
	Tier III	

SEEM Disaggregation - Analog/Benchmark

SEEM Disaggregation	SEEM Analog/Benchmark
• Not Applicable	• Not Applicable

P-2: Average Jeopardy Notice Interval & Percentage of Orders Given Jeopardy Notices

Definition

When BellSouth can determine in advance that a committed due date is in jeopardy for facility delay, it will provide advance notice to the CLEC.

The interval is from the date/time the notice is released to the CLEC/BellSouth systems until 5pm on the commitment date of the order. The Percent of Orders is the percentage of orders given jeopardy notices for facility delay in the count of orders confirmed in the report period.

Exclusions

- Orders held for CLEC end user reasons
- Disconnect (D) & From (F) orders
- Non-Dispatch Orders

Business Rules

When BellSouth can determine in advance that a committed due date is in jeopardy for facility delay, it will provide advance notice to the CLEC. The number of committed orders in a report period is the number of orders that have a due date in the reporting period. Jeopardy notices for interconnection trunks results are usually zero as these trunks seldom experience facility delays. The Committed due date is considered the Confirmed due date. This report measures dispatched orders only. If an order is originally sent as non-dispatch and it is determined there is a facility delay, the order is converted to a dispatch code so the facility problem can be corrected. It will remain coded dispatched until completion.

Calculation

Jeopardy Interval = a - b

- a = Date and Time of Jeopardy Notice
- b = Date and Time of Scheduled Due Date on Service Order

Average Jeopardy Interval = c ÷ d

- c = Sum of all jeopardy intervals
- d = Number of Orders Notified of Jeopardy in Reporting Period

Percent of Orders Given Jeopardy Notice = (e ÷ f) X 100

- e = Number of Orders Given Jeopardy Notices in Reporting Period
- f = Number of Orders Confirmed (due) in Reporting Period)

Report Structure

- CLEC Specific
- CLEC Aggregate
- BellSouth Aggregate
- Dispatch Orders
- Mechanized Orders
- Non-Mechanized Orders

Data Retained

Relating to CLEC Experience	Relating to BellSouth Performance
• Report Month • CLEC Order Number and PON • Date and Time Jeopardy Notice Sent • Committed Due Date • Service Type **Note:** Code in parentheses is the corresponding header found in the raw data file.	• Report Month • BellSouth Order Number • Date and Time Jeopardy Notice Sent • Committed Due Date • Service Type

SQM Disaggregation - Analog/Benchmark

SQM LEVEL of Disaggregation	SQM Retail Analog/Benchmark:
% Orders Given Jeopardy Notice	
• Resale Residence	• Retail Residence
• Resale Business	• Retail Business
• Resale Design	• Retail Design
• Resale PBX	• Retail PBX
• Resale Centrex	• Retail Centrex
• Resale ISDN	• Retail ISDN
• LNP (Standalone)	• Retail Residence and Business (POTS)
• INP (Standalone)	• Retail Residence and Business (POTS)
• 2W Analog Loop Design	• Retail Residence and Business Dispatch
• 2W Analog Loop Non-Design	• Retail Residence and Business - (POTS Excluding Switch-Based Orders)
• 2W Analog Loop w/LNP Design	• Retail Residence and Business Dispatch
• 2W Analog Loop w/LNP Non-Design	• Retail Residence and Business - (POTS Excluding Switch-Based Orders)
• 2W Analog Loop w/INP Design	• Retail Residence and Business Dispatch
• 2W Analog Loop w/INP Non-Design	• Retail Residence and Business (POTS Excluding Switch-Based Orders)
• UNE Digital Loop < DS1	• Retail Digital Loop < DS1
• UNE Digital Loop ≥ DS1	• Retail Digital Loop ≥ DS1
• UNE Loop + Port Combinations	• Retail Business and Residence
• UNE Switch Ports	• Retail Residence and Business (POTS)
• UNE Combo Other	• Retail Residence, Business and Design Dispatch
• UNE xDSL (HDSL, ADSL and UCL)	• ADSL Provided to Retail
• UNE ISDN	• Retail ISDN BRI
• UNE Line Sharing	• ADSL Provided to Retail
• UNE Other Design	• Retail Design
• UNE Other Non -Design	• Retail Residence and Business
• Local Transport (Unbundled Interoffice Transport)	• Retail DS1/DS3 Interoffice
• Local Interconnection Trunks	• Parity with Retail
• Average Jeopardy Notice Interval	• 95% ≥ 48 Hours

SEEM Measure

SEEM Measure		
No	Tier I	
	Tier II	
	Tier III	

SEEM Disaggregation - Analog/Benchmark

SEEM Disaggregation	SEEM Analog/Benchmark
• Not Applicable	• Not Applicable

P-3: Percent Missed Installation Appointments

Definition

"Percent missed installation appointments" monitors the reliability of BellSouth commitments with respect to committed due dates to assure that the CLEC can reliably quote expected due dates to their retail customer as compared to BellSouth. This measure is the percentage of total orders processed for which BellSouth is unable to complete the service orders on the committed due dates and reported for Total misses and End User Misses.

Exclusions

- Canceled Service Orders
- Order Activities of BellSouth or the CLEC associated with internal or administrative use of local services (Record Orders, Listing Orders Test Orders, etc.)
- Disconnect (D) & From (F) orders
- End User Misses on Local Interconnection Trunks

Business Rules

Percent Missed Installation Appointments (PMI) is the percentage of orders with completion dates in the reporting period that are past the original committed due date. Missed Appointments caused by end-user reasons will be included and reported separately. The first commitment date on the service order that is a missed appointment is the missed appointment code used for calculation whether it is a BellSouth missed appointment or an End User missed appointment. The "due date" is any time on the confirmed due date. Which means there cannot be a cutoff time for commitments, as certain types of orders are requested to be worked after standard business hours. Also, during Daylight Savings Time, field technicians are scheduled until 9PM in some areas and the customer is offered a greater range of intervals from which to select.

Calculation

Percent Missed Installation Appointments = (a ÷ b) X 100

- a = Number of Orders with Completion date in Reporting Period past the Original Committed Due Date
- b = Number of Orders Completed in Reporting Period

Report Structure

- CLEC Specific
- CLEC Aggregate
- BellSouth Aggregate
- Report in Categories of <10 lines/circuits ≥ 10 lines/circuits (except trunks)
- Dispatch/No Dispatch

Report Explanation: The difference between End User MA and Total MA is the result of BellSouth caused misses. Here, Total MA is the total percent of orders missed either by BellSouth or CLEC end user. The End User MA represents the percentage of orders missed by the CLEC or their end user.

Data Retained

Relating to CLEC Experience	Relating to BellSouth Performance
• Report Month • CLEC Order Number and PON (PON) • Committed Due Date (DD) • Completion Date (CMPLTN DD) • Status Type • Status Notice Date • Standard Order Activity • Geographic Scope **Note:** Code in parentheses is the corresponding header found in the raw data file.	• Report Month • BellSouth Order Number • Committed Due Date (DD) • Completion Date (CMPLTN DD) • Status Type • Status Notice Date • Standard Order Activity • Geographic Scope

SQM Disaggregation - Analog/Benchmark

SQM LEVEL of Disaggregation	SQM Retail Analog/Benchmark
• Resale Residence	• Retail Residence
• Resale Business	• Retail Business
• Resale Design	• Retail Design
• Resale PBX	• Retail PBX
• Resale Centrex	• Retail Centrex
• Resale ISDN	• Retail ISDN
• LNP (Standalone)	• Retail Residence and Business (POTS)
• INP (Standalone)	• Retail Residence and Business (POTS)
• 2W Analog Loop Design	• Retail Residence and Business Dispatch
• 2W Analog Loop Non-Design - Dispatch - Non-Dispatch (Dispatch In)	• Retail Residence and Business - (POTS Excluding Switch-Based Orders) - Dispatch - Non-Dispatch (Dispatch In)
• 2W Analog Loop w/LNP Design	• Retail Residence and Business Dispatch
• 2W Analog Loop w/LNP Non-Design - Dispatch - Non-Dispatch (Dispatch In)	• Retail Residence and Business - (POTS Excluding Switch-Based Orders) - Dispatch - Non-Dispatch (Dispatch In)
• 2W Analog Loop w/INP Design	• Retail Residence and Business Dispatch
• 2W Analog Loop w/INP Non-Design - Dispatch - Non-Dispatch (Dispatch In)	• Retail Residence and Business (POTS Excluding Switch-Based Orders) - Dispatch - Non-Dispatch (Dispatch In)
• UNE Digital Loop < DS1	• Retail Digital Loop < DS1
• UNE Digital Loop ≥ DS1	• Retail Digital Loop ≥ DS1
• UNE Loop + Port Combinations - Dispatch Out - Non-Dispatch - Dispatch In - Switch-Based	• Retail Residence and Business - Dispatch Out - Non-Dispatch - Dispatch In - Switch-Based
• UNE Switch Ports	• Retail Residence and Business (POTS)
• UNE Combo Other - Dispatch - Non-Dispatch (Dispatch In)	• Retail Residence, Business and Design Dispatch (Including Dispatch Out and Dispatch In) - Dispatch - Non-Dispatch (Dispatch In)
• UNE xDSL (HDSL, ADSL and UCL)	• ADSL Provided to Retail
• UNE ISDN	• Retail ISDN - BRI
• UNE Line Sharing	• ADSL Provided to Retail
• UNE Other Design	• Retail Design
• UNE Other Non - Design	• Retail Residence and Business
• Local Transport (Unbundled Interoffice Transport)	• Retail DS1/DS3 Interoffice
• Local Interconnection Trunks	• Parity with Retail

SEEM Measure

SEEM Measure		
Yes	Tier I	X
	Tier II	X
	Tier III	X

SEEM Disaggregation - Analog/Benchmark

SEEM Disaggregation	SEEM Analog/Benchmark
• Resale POTS	• Retail Residence and Business (POTS)
• Resale Design	• Retail Design
• UNE Loop + Port Combinations	• Retail Residence and Business
• UNE Loops	• Retail Residence and Business Dispatch
• UNE xDSL	• ADSL Provided to Retail
• UNE Line Sharing	• ADSL Provided to Retail
• Local Interconnection Trunks	• Parity with Retail

P-4: Average Completion Interval (OCI) & Order Completion Interval Distribution

Definition

The "average completion interval" measure monitors the interval of time it takes BellSouth to provide service for the CLEC or its own customers. The "Order Completion Interval Distribution" provides the percentages of orders completed within certain time periods. This report measures how well BellSouth meets the interval offered to customers on service orders.

Exclusions

- Canceled Service Orders
- Order Activities of BellSouth or the CLEC associated with internal or administrative use of local services (Record Orders, Listing Orders, Test Orders, etc.)
- Disconnect (D&F) orders (Except "D" orders associated with LNP Standalone)
- "L" Appointment coded orders (where the customer has requested a later than offered interval)

Business Rules

The actual completion interval is determined for each order processed during the reporting period. The completion interval is the elapsed time from when BellSouth issues a FOC or SOCS date time stamp receipt of an order from the CLEC to BellSouth's actual order completion date. This includes all delays for BellSouth's CLEC/End Users. The clock starts when a valid order number is assigned by SOCS and stops when the technician or system completes the order in SOCS. Elapsed time for each order is accumulated for each reporting dimension. The accumulated time for each reporting dimension is then divided by the associated total number of orders completed. Orders that are worked on zero due dates are calculated with a .33-day interval (8 hours) in order to report a portion of a day interval. These orders are issued and worked/completed on the same day. They can be either flow through orders (no field work-non-dispatched) or field orders (dispatched).

The interval breakout for UNE and Design is: 0-5 = 0-4.99, 5-10 = 5-9.99, 10-15 = 10-14.99, 15-20 = 15- 19.99, 20-25 = 20-24.99, 25-30 = 25-29.99, $\geq$ 30 = 30 and greater.

Calculation

Completion Interval = (a - b)

- a = Completion Date
- b = Order Issue Date

Average Completion Interval = (c ÷ d)

- c = Sum of all Completion Intervals
- d = Count of Orders Completed in Reporting Period

Order Completion Interval Distribution (for each interval) = (e ÷ f) X 100

- e = Service Orders Completed in "X" days
- f = Total Service Orders Completed in Reporting Period

Report Structure

- CLEC Specific
- CLEC Aggregate
- BellSouth Aggregate
- Dispatch / No Dispatch categories applicable to all levels except trunks
- Residence & Business reported in day intervals = 0,1,3,4,5,5+
- UNE and Design reported in day intervals =0-5,5-10,10-15,15-20,20-25,25-30,$\geq$ 30
- All Levels are reported <10 line/circuits; $\geq$ 10 line/circuits (except trunks)
- ISDN Orders included in Non-Design

Data Retained

Relating to CLEC Experience	Relating to BellSouth Performance
• Report Month • CLEC Company Name • Order Number (PON) • Application Date & Time (TICKET_ID) • Completion Date (CMPLTN_DT) • Service Type (CLASS_SVC_DESC) • Geographic Scope **Note:** Code in parentheses is the corresponding header found in the raw data file.	• Report Month • BellSouth Order Number • Application Date & Time • Order Completion Date & Time • Service Type • Geographic Scope

SQM Disaggregation - Analog/Benchmark

SQM LEVEL of Disaggregation	SQM Retail Analog/Benchmark
• Resale Residence	• Retail Residence
• Resale Business	• Retail Business
• Resale Design	• Retail Design
• Resale PBX	• Retail PBX
• Resale Centrex	• Retail Centrex
• Resale ISDN	• Retail ISDN
• LNP (Standalone)	• Retail Residence and Business (POTS)
• INP (Standalone)	• Retail Residence and Business (POTS)
• 2W Analog Loop Design	• Retail Residence and Business Dispatch
• 2W Analog Loop Non-Design - Dispatch - Non-Dispatch (Dispatch In)	• Retail Residence and Business - (POTS Excluding Switch-Based Orders) - Dispatch - Non-Dispatch (Dispatch In)
• 2W Analog Loop w/LNP Design	• Retail Residence and Business Dispatch
• 2W Analog Loop w/LNP Non-Design - Dispatch - Non-Dispatch (Dispatch In)	• Retail Residence and Business - (POTS Excluding Switch-Based Orders) - Dispatch - Non-Dispatch (Dispatch In)
• 2W Analog Loop w/INP Design	• Retail Residence and Business Dispatch
• 2W Analog Loop w/INP Non-Design - Dispatch - Non-Dispatch (Dispatch In)	• Retail Residence and Business - (POTS Excluding Switch-Based Orders) - Dispatch - Non-Dispatch (Dispatch In)
• UNE Digital Loop < DS1	• Retail Digital Loop < DS1
• UNE Digital Loop ≥ DS1	• Retail Digital Loop ≥ DS1
• UNE Loop + Port Combinations - Dispatch Out - Non-Dispatch - Dispatch In - Switch-Based	• Retail Residence and Business - Dispatch Out - Non-Dispatch - Dispatch In - Switch-Based
• UNE Switch Ports	• Retail Residence and Business (POTS)

SQM LEVEL of Disaggregation	SQM Retail Analog/Benchmark
• UNE Combo Other - Dispatch - Non-Dispatch (Dispatch In)	• Retail Residence, Business and Design Dispatch (Including Dispatch Out and Dispatch In) - Dispatch - Non-Dispatch (Dispatch In)
• UNE xDSL (HDSL, ADSL and UCL) without conditioning	• 7 Days
• UNE xDSL (HDSL, ADSL and UCL) with conditioning	• 14 Days
• UNE ISDN	• Retail ISDN BRI
• UNE Line Sharing	• ADSL Provided to Retail
• UNE Other Design	• Retail Design
• UNE Other Non-Design	• Retail Residence and Business
• Local Transport (Unbundled Interoffice Transport)	• Retail DS1/DS3 Interoffice
• Local Interconnection Trunks	• Parity with Retail

SEEM Measure

SEEM Measure		
Yes	Tier I	X
	Tier II	X
	Tier III	X

SEEM Disaggregation - Analog/Benchmark

SEEM Disaggregation	SEEM Analog/Benchmark
• Resale POTS	• Retail Residence and Business (POTS)
• Resale Design	• Retail Design
• UNE Loop + Port Combinations	• Retail Residence and Business
• UNE Loops	• Retail Residence and Business Dispatch
• UNE xDSL without conditioning	• 7 Days
• UNE xDSL with conditioning	• 14 Days
• UNE Line Sharing	• ADSL Provided to Retail
• Local Interconnection Trunks	• Parity with Retail

P-5: Average Completion Notice Interval

Definitions

The Completion Notice Interval is the elapsed time between the BellSouth reported completion of work and the issuance of a valid completion notice to the CLEC.

Exclusions

- Cancelled Service Orders
- Order Activities of BellSouth or the CLEC associated with internal or administrative use of local services (Record Orders, Listing Orders, Test Orders, etc.)
- D&F orders (Exception: "D" orders associated with LNP Standalone)

Business Rules

Measurement on interval of completion date and time entered by a field technician on dispatched orders, and 5PM start time on the due date for non-dispatched orders; to the release of a notice to the CLEC/BellSouth of the completion status. The field technician notifies the CLEC the work was complete and then he/she enters the completion time stamp information in his/her computer. This information switches through to the SOCS systems either completing the order or rejecting the order to the Work Management Center (WMC). If the completion is rejected, it is manually corrected and then completed by the WMC. The notice is returned on each individual order.

The start time for all orders is the completion stamp either by the field technician or the 5PM due date stamp; the end time for mechanized orders is the time stamp the notice was transmitted to the CLEC interface (LENS, EDI, OR TAG). For non-mechanized orders the end timestamp will be timestamp of order update to C-SOTS system.

Calculation

Completion Notice Interval = (a - b)

- a = Date and Time of Notice of Completion
- b = Date and Time of Work Completion

Average Completion Notice Interval = c ÷ d

- c = Sum of all Completion Notice Intervals
- d = Number of Orders with Notice of Completion in Reporting Period

Report Structure

- CLEC Specific
- CLEC Aggregate
- BellSouth Aggregate
- Mechanized Orders
- Non-Mechanized Orders
- Reporting intervals in Hours; 0,1-2,2-4,4-8,8-12,12-24, ≥ 24 plus Overall Average Hour Interval (The categories are inclusive of these time intervals: 0-1 = 0.99; 1-2 =1-1.99; 2-4 = 2-3.99, etc.)
- Reported in categories of <10 line / circuits; ≥ 10 line/circuits (except trunks)

Data Retained

Relating to CLEC Experience	Relating to BellSouth Performance
• Report Month • CLEC Order Number (so_nbr) • Work Completion Date (cmpltn_dt) • Work Completion Time • Completion Notice Availability Date • Completion Notice Availability Time • Service Type • Geographic Scope **Note:** Code in parentheses is the corresponding header found in the raw data file.	• Report Month • BellSouth Order Number (so_nbr) • Work Completion Date (cmpltn_dt) • Work Completion Time • Completion Notice Availability Date • Completion Notice Availability Time • Service Type • Geographic Scope **NOTE:** Code in parentheses is the corresponding header found in the raw data file.

SQM Disaggregation - Analog/Benchmark

SQM LEVEL of Disaggregation	SQM Retail Analog/Benchmark
• Resale Residence	• Retail Residence
• Resale Business	• Retail Business
• Resale Design	• Retail Design
• Resale PBX	• Retail PBX
• Resale Centrex	• Retail Centrex
• Resale ISDN	• Retail ISDN
• LNP (Standalone)	• Retail Residence and Business (POTS)
• INP (Standalone)	• Retail Residence and Business (POTS)
• 2W Analog Loop Design	• Retail Residence and Business Dispatch
• 2W Analog Loop Non-Design - Dispatch - Non-Dispatch (Dispatch In)	• Retail Residence and Business - (POTS Excluding Switch-Based Orders) - Dispatch - Non-Dispatch (Dispatch In)
• 2W Analog Loop w/LNP Design	• Retail Residence and Business Dispatch
• 2W Analog Loop w/LNP Non-Design - Dispatch - Non-Dispatch (Dispatch In)	• Retail Residence and Business - (POTS Excluding Switch-Based Orders) - Dispatch - Non-Dispatch (Dispatch In)
• 2W Analog Loop w/INP Design	• Retail Residence and Business Dispatch
• 2W Analog Loop w/INP Non-Design - Dispatch - Non-Dispatch (Dispatch In)	• Retail Residence and Business (POTS Excluding Switch- Based Orders) - Dispatch - Non-Dispatch (Dispatch In)
• UNE Digital Loop < DS1	• Retail Digital Loop < DS1
• UNE Digital Loop ≥ DS1	• Retail Digital Loop ≥ DS1
• UNE Loop + Port Combinations - Dispatch Out - Non-Dispatch - Dispatch In - Switch-Based	• Retail Residence and Business - Dispatch Out - Non-Dispatch - Dispatch In - Switch-Based
• UNE Switch Ports	• Retail Residence and Business (POTS)

SQM LEVEL of Disaggregation	SQM Retail Analog/Benchmark
• UNE Combo Other - Dispatch - Non-Dispatch (Dispatch In)	• Retail Residence, Business and Design Dispatch (Including Dispatch Out and Dispatch In) - Dispatch - Non-Dispatch (Dispatch In)
• UNE xDSL (HDSL, ADSL and UCL)	• ADSL Provided to Retail
• UNE ISDN	• Retail ISDN BRI
• UNE Line Sharing	• ADSL Provided to Retail
• UNE Other Design	• Retail Design
• UNE Other Non-Design	• Retail Residence and Business
• Local Transport (Unbundled Interoffice Transport)	• Retail DS1/DS3 Interoffice
• Local Interconnection Trunks	• Parity with Retail

SEEM Measure

SEEM Measure		
No	Tier I	
	Tier II	
	Tier III	

SEEM Disaggregation - Analog/Benchmark

SEEM Disaggregation	SEEM Analog/Benchmark
• Not Applicable	• Not Applicable

P-6: % Completions/Attempts without Notice or < 24 hours Notice

Definition

This Report measures the interval from the FOC end timestamp on the LSR until 5:00 P.M. on the original committed due date of a service order. The purpose of this measure is to report if BellSouth is returning a FOC to the CLEC in time for the CLEC to notify their customer of the scheduled date.

Exclusions

"0" dated orders or any request where the subscriber requested an earlier due date of < 24 hours prior to the original commitment date, or any LSR received < 24 hours prior to the original commitment date.

Business Rules

For CLEC Results:

Calculation would exclude any successful or unsuccessful service delivery where the CLEC was informed at least 24 hours in advance. BellSouth may also exclude from calculation any LSRs received from the requesting CLEC with less than 24 hour notice prior to the commitment date.

For BellSouth Results:

BellSouth does not provide a FOC to its retail customers.

Calculation

Percent Completions or Attempts without Notice or with Less Than 24 Hours Notice = (a ÷ b) X 100

- a = Completion Dispatches (Successful and Unsuccessful) With No FOC or FOC Received < 24 Hours of original Committed Due Date
- b = All Completions

Report Structure

- CLEC Specific
- CLEC Aggregate
- Dispatch /Non-Dispatch
- Total Orders FOC < 24 Hours
- Total Completed Service Orders
- % FOC < 24 Hours

Data Retained

Relating to CLEC Experience	Relating to BellSouth Performance
• Committed Due Date (DD) • FOC End Timestamp • Report Month • CLEC Order Number and PON • Geographic Scope - State / Region	• Not Applicable

SQM Disaggregation - Analog/Benchmark

SQM LEVEL of Disaggregation	Retail Analog/Benchmark
• Resale Residence • Resale Business • Resale Design • Resale PBX • Resale Centrex • Resale ISDN • LNP (Standalone) • INP (Standalone) • 2W Analog Loop Design • 2W Analog Loop-Non-Design • 2W Analog Loop w/LNP - Design • 2W Analog Loop w/LNP- Non-Design • 2W Analog Loop w/INP-Design • 2W Analog Loop w/INP-Non-Design • UNE Digital Loop < DS1 • UNE Digital Loop >=DS1 • UNE Loop + Port Combinations • UNE Switch ports • UNE Combo Other • UNE xDSL (HDSL, ADSL and UCL) • UNE ISDN • UNE Line Sharing • UNE Other Design • UNE Other Non -Design • Local Transport (Unbundled Interoffice Transport) • Local Interconnection Trunks	• Diagnostic

SEEM Measure

SEEM Measure		
No	Tier I	
	Tier II	
	Tier III	

SEEM Disaggregation - Analog/Benchmark

SEEM Disaggregation	SEEM Analog/Benchmark
• Not Applicable	• Not Applicable

P-7: Coordinated Customer Conversions Interval

Definition

This report measures the average time it takes BellSouth to disconnect an unbundled loop from the BellSouth switch and cross connect it to CLEC equipment. This measurement applies to service orders with INP and with LNP, and where the CLEC has requested BellSouth to provide a coordinated cut over.

Exclusions

- Any order canceled by the CLEC will be excluded from this measurement.
- Delays due to CLEC following disconnection of the unbundled loop
- Unbundled Loops where there is no existing subscriber loop and loops where coordination is not requested.

Business Rules

When the service order includes INP, the interval includes the total time for the cut over including the translation time to place the line back in service on the ported line. When the service order includes LNP, the interval only includes the total time for the cut over (the port of the number is controlled by the CLEC). The interval is calculated for the entire cut over time for the service order and then divided by items worked in that time to give the average per-item interval for each service order.

Calculation

Coordinated Customer Conversions Interval = (a - b)

- a = Completion Date and Time for Cross Connection of a Coordinated Unbundled Loop
- b = Disconnection Date and Time of an Coordinated Unbundled Loop

Percent Coordinated Customer Conversions (for each interval) = (c ÷ d) X 100

- c = Total number of Coordinated Customer Conversions for each interval
- d = Total Number of Unbundled Loop with Coordinated Conversions (items) for the reporting period

Report Structure

- CLEC Specific
- CLEC Aggregate
- The interval breakout is 0-5 = 0-4.99, 5-15 = 5-14.99, ≥15 = 15 and greater, plus Overall Average Interval.

Data Retained

Relating to CLEC Experience	Relating to BellSouth Experience
• Report Month • CLEC Order Number • Committed Due Date (DD) • Service Type (CLASS_SVC_DESC) • Cut over Start Time • Cut over Completion Time • Portability Start and Completion Times (INP orders) • Total Conversions (Items) **Note:** Code in parentheses is the corresponding header found in the raw data file.	• No BellSouth Analog Exists

SQM Disaggregation - Analog/Benchmark

SQM LEVEL of Disaggregation	SQM Retail Analog/Benchmark
• Unbundled Loops with INP/LNP • Unbundled Loops without INP/LNP	• 95% ≤ 15 minutes

SEEM Measure

SEEM Measure		
Yes	Tier I	X
	Tier II	X
	Tier III	

SEEM Disaggregation - Analog/Benchmark

SEEM Disaggregation	SEEM Analog/Benchmark
• Unbundled Loops	• 95% ≤ 15 minutes

P-7A: Coordinated Customer Conversions – Hot Cut Timeliness% Within Interval and Average Interval

Definition

This category measures whether BellSouth begins the cut over of an unbundled loop on a coordinated and/or a time specific order at the CLEC requested start time. It measures the percentage of orders where the cut begins within 15 minutes of the requested start time of the order and the average interval.

Exclusions

- Any order canceled by the CLEC will be excluded from this measurement.
- Delays caused by the CLEC
- Unbundled Loops where there is no existing subscriber loop and loops where coordination is not requested.
- All unbundled loops on multiple loop orders after the first loop.

Business Rules

This report measures whether BellSouth begins the cut over of an unbundled loop on a coordinated and/or a time specific order at the CLEC requested start time. The cut is considered on time if it starts 15 minutes before or after the requested start time. Using the scheduled time and the actual cut over start time, the measurement will calculate the percent within interval and the average interval. If a cut involves multiple lines, the cut will be considered "on time" if the first line is cut within the interval. ≤ 15 minutes includes intervals that began 15:00 minutes or less before the scheduled cut time and cuts that began 15 minutes or less after the scheduled cut time; >15 minutes, ≤30 minutes includes cuts within 15:00 – 30:00 minutes either prior to or after the scheduled cut time; >30 minutes includes cuts greater than 30:00 minutes either prior to or after the scheduled cut time.

Calculation

% within Interval = (a ÷ b) X 100

- a = Total Number of Coordinated Unbundled Loop Orders for the interval
- b = Total Number of Coordinated Unbundled Loop Orders for the reporting period

Interval = (c - d)

- c = Scheduled Time for Cross Connection of a Coordinated Unbundled Loop Order
- d = Actual Start Date and Time of a Coordinated Unbundled Loop Order

Average Interval = (e ÷ f)

- Sum of all Intervals
- Total Number of Coordinated Unbundled Loop Orders for the reporting period.

Report Structure

- CLEC Specific
- CLEC Aggregate

  Reported in intervals of early, on time and late cuts %≤ 15 minutes; % >15 minutes, ≤30 minutes; % >30 minutes, plus Overall Average Interval

Data Retained

Relating to CLEC Experience	Relating to BellSouth Experience
• Report Month • CLEC Order Number (so_nbr) • Committed Due Date (DD) • Service Type (CLASS_SVC_DESC) • Cut over Scheduled Start Time • Cut over Actual Start Time • Total Conversions Orders **Note:** Code in parentheses is the corresponding header found in the raw data file.	• No BellSouth Analog exists

SQM Disaggregation - Analog/Benchmark

SQM LEVEL of Disaggregation	SQM Retail Analog/Benchmark
• Product Reporting Level - SL1 Time Specific - SL1 Non-Time Specific - SL2 Time Specific - SL2 Non-Time Specific	• 95% Within + or – 15 minutes of Scheduled Start Time

SEEM Measure

SEEM Measure		
Yes	Tier I	X
	Tier II	X
	Tier III	

SEEM Disaggregation - Analog/Benchmark

SEEM Disaggregation	SEEM Analog/Benchmark
- UNE Loops	• 95% Within + or – 15 minutes of Scheduled Start time

P-7B: Coordinated Customer Conversions – Average Recovery Time

Definition

Measures the time between notification and resolution by BellSouth of a service outage found that can be isolated to the BellSouth side of the network. The time between notification and resolution by BellSouth must be measured to ensure that CLEC customers do not experience unjustifiable lengthy service outages during a Coordinated Customer Conversion. This report measures outages associated with Coordinated Customer Conversions prior to service order completion.

Exclusions

- Cut overs where service outages are due to CLEC caused reasons
- Cut overs where service outages are due to end-user caused reasons

Business Rules

Measures the outage duration time related to Coordinated Customer Conversions from the initial trouble notification until the trouble has been restored and the CLEC has been notified. The duration time is defined as the time from the initial trouble notification until the trouble has been restored and the CLEC has been notified. The interval is calculated on the total outage time for the circuits divided by the total number of outages restored during the report period to give the average outage duration.

Calculation

Recovery Time = (a - b)

- a = Date & Time That Trouble is Closed by CLEC
- b = Date & Time Initial Trouble is Opened with BellSouth

Average Recovery Time = (c ÷ d)

- c = Sum of all the Recovery Times
- d = Number of Troubles Referred to the BellSouth

Report Structure

- CLEC Specific
- CLEC Aggregate

Data Retained

Relating to CLEC Experience	Relating to BellSouth Experience
• Report Month • CLEC Company Name • CLEC Order Number (so_nbr) • Committed Due Date (DD) • Service Type (CLASS_SVC_DESC) • CLEC Acceptance Conflict (CLEC_CONFLICT) • CLEC Conflict Resolved (CLEC_RESOLVE) • CLEC Conflict MFC (CLEC_CONFLICT_MFC) • Total Conversion Orders **Note:** Code in parentheses is the corresponding header found in the raw data file.	• None

SQM Disaggregation - Analog/Benchmark

SQM LEVEL of Disaggregation	Retail Analog/Benchmark
• Unbundled Loops with INP/LNP • Unbundled Loops without INP/LNP	• Diagnostic

SEEM Measure

SEEM Measure		
No	Tier I	
	Tier II	
	Tier III	

SEEM Disaggregation - Analog/Benchmark

SEEM Disaggregation	SEEM Analog/Benchmark
• Not Applicable	• Not Applicable

P-7C: Hot Cut Conversions - % Provisioning Troubles Received Within 7 days of a completed Service Order

Definition

Percent Provisioning Troubles received within 7 days of a completed service order associated with a Coordinated and Non-Coordinated Customer Conversion. Measures the quality and accuracy of Hot Cut Conversion Activities.

Exclusions

- Any order canceled by the CLEC
- Troubles caused by Customer Provided Equipment

Business Rules

Measures the quality and accuracy of completed service orders associated with Coordinated and Non-Coordinated Hot Cut Conversions. The first trouble report received on a circuit ID within 7 days following a service order completion is counted in this measure. Subsequent trouble reports are measured in Repeat Report Rate. Reports are calculated searching in the prior report period for completed Coordinated and Non-Coordinated Hot Cut Conversion service orders and following 7 days after the completion of the service order for a trouble report issue date.

Calculation

% Provisioning Troubles within 7 days of service order completion = (a ÷ b) X 100

- a = The sum of all Hot Cut Circuits with a trouble within 7 days following service order(s) completion
- b = The total number of Hot Cut service order circuits completed in the previous report calendar month

Report Structure

- CLEC Specific
- CLEC Aggregate
- Dispatch/Non-Dispatch

Data Retained

Relating to CLEC Experience	Relating to BellSouth Experience
• Report Month • CLEC Order Number (so_nbr) • PON • Order Submission Date (TICKET_ID) • Order Submission Time (TICKET_ID) • Status Type • Status Notice Date • Standard Order Activity • Geographic Scope • Total Conversion Circuits **Note:** Code in parentheses is the corresponding header found in the raw data file.	• No BellSouth Analog exists

SQM Disaggregation - Analog/Benchmark

SQM LEVEL of Disaggregation	SQM Retail Analog/Benchmark
• UNE Loop Design • UNE Loop Non-Design	• ≤ 5%

SEEM Measure

SEEM Measure		
Yes	Tier I	X
	Tier II	X
	Tier III	

SEEM Disaggregation - Analog/Benchmark

SEEM Disaggregation	SEEM Analog/Benchmark
• UNE Loops	• ≤ 5%

P-8: Cooperative Acceptance Testing - % of xDSL Loops Tested

Definition

The loop will be considered cooperatively tested when the BellSouth technician places a call to the CLEC representative to initiate cooperative testing and jointly performs the tests with the CLEC.

Exclusions

- Testing failures due to CLEC (incorrect contact number, CLEC not ready, etc.)
- xDSL lines with no request for cooperative testing

Business Rules

When a BellSouth technician finishes delivering an order for an xDSL loop where the CLEC order calls for cooperative testing at the customer's premise, the BellSouth technician is to call a toll free number to the CLEC testing center. The BellSouth technician and the CLEC representative at the center then test the line. As an example of the type of testing performed, the testing center may ask the technician to put a short on the line so that the center can run a test to see if it can identify the short.

Calculation

Cooperative Acceptance Testing - % of xDSL Loops Tested = (a ÷ b) X 100

- a = Total number of successful xDSL cooperative tests for xDSL lines where cooperative testing was requested in the reporting period
- b = Total Number of xDSL line tests requested by the CLEC and scheduled in the reporting period

Report Structure

- CLEC Specific
- CLEC Aggregate
- Type of Loop tested

Data Retained

Relating to CLEC Experience	Relating to BellSouth Experience
• Report Month • CLEC Company Name (OCN) • CLEC Order Number (so_nbr) and PON (PON) • Committed Due Date (DD) • Service Type (CLASS_SVC_DESC) • Acceptance Testing Completed (ACCEPT_TESTING) • Acceptance Testing Declined (ACCEPT_TESTING) • Total xDSL Orders **Note**: Code in parentheses is the corresponding header found in the raw data file.	• No BellSouth analog exists

SQM Disaggregation - Analog/Benchmark

SQM LEVEL of Disaggregation:	Retail Analog/Benchmark:
• UNE xDSL - ADSL - HDSL - UCL - OTHER	• 95% of Lines Tested

SEEM Measure

SEEM Measure		
Yes	Tier I	X
	Tier II	X
	Tier III	

SEEM Disaggregation - Analog/Benchmark

SEEM Disaggregation:	SEEM Analog/Benchmark:
• UNE xDSL	• 95% of Lines Tested

P-9: % Provisioning Troubles within 30 days of Service Order Completion

Definition

Percent Provisioning Troubles within 30 days of Service Order Completion measures the quality and accuracy of Service order activities.

Exclusions

- Canceled Service Orders
- Order Activities of BellSouth or the CLEC associated with internal or administrative use of local services (Record Orders, Listing Orders, Test Orders, etc.)
- D & F orders
- Trouble reports caused and closed out to Customer Provided Equipment (CPE)

Business Rules

Measures the quality and accuracy of completed orders. The first trouble report from a service order after completion is counted in this measure. Subsequent trouble reports are measured in Repeat Report Rate. Reports are calculated searching in the prior report period for completed service orders and following 30 days after completion of the service order for a trouble report issue date.

D & F orders are excluded as there is no subsequent activity following a disconnect.

Note: Standalone LNP historical data is not available in the maintenance systems (LMOS or WFA).

Calculation

% Provisioning Troubles within 30 days of Service Order Activity = (a ÷ b) X 100

- a = Trouble reports on all completed orders 30 days following service order(s) completion
- b = All Service Orders completed in the previous report calendar month

Report Structure

- CLEC Specific
- CLEC Aggregate
- BellSouth Aggregate
- Reported in categories of <10 line/circuits; ≥ 10 line/circuits (except trunks)
- Dispatch / No Dispatch (except trunks)

Data Retained

Relating to CLEC Experience	Relating to BellSouth Experience
• Report Month • CLEC Order Number and PON • Order Submission Date (TICKET_ID) • Order Submission Time (TICKET_ID) • Status Type • Status Notice Date • Standard Order Activity • Geographic Scope **Note:** Code in parentheses is the corresponding header found in the raw data file.	• Report Month • BellSouth Order Number • Order Submission Date • Order Submission Time • Status Type • Status Notice Date • Standard Order Activity • Geographic Scope

SQM Disaggregation - Analog/Benchmark

SQM LEVEL of Disaggregation	Retail Analog/Benchmark
• Resale Residence	• Retail Residence

SQM LEVEL of Disaggregation	Retail Analog/Benchmark
• Resale Business	• Retail business
• Resale Design	• Retail Design
• Resale PBX	• Retail PBX
• Resale Centrex	• Retail Centrex
• Resale ISDN	• Retail ISDN
• 2W Analog Loop Design	• Retail Residence and Business Dispatch
• 2W Analog Loop Non-Design - Dispatch - Non-Dispatch (Dispatch In)	• Retail Residence and Business - (POTS Excluding Switch-Based Orders) - Dispatch - Non-Dispatch (Dispatch In)
• 2W Analog Loop w/LNP Design	• Retail Residence and Business Dispatch
• 2W Analog Loop w/LNP Non-Design - Dispatch - Non-Dispatch (Dispatch In)	• Retail Residence and Business - (POTS Excluding Switch-Based Orders) - Dispatch - Non-Dispatch (Dispatch In)
• 2W Analog Loop w/INP Design	• Retail Residence and Business Dispatch
• 2W Analog Loop w/INP Non-Design - Dispatch - Non-Dispatch (Dispatch In)	• Retail Residence and Business (POTS - Excluding Switch-Based Orders) - Dispatch - Non-Dispatch (Dispatch In)
• UNE Digital Loop < DS1	• Retail Digital Loop < DS1
• UNE Digital Loop ≥ DS1	• Retail Digital Loop ≥ DS1
• UNE xDSL (HDSL, ADSL and UCL)	• ADSL provided to Retail
• UNE ISDN	• Retail ISDN BRI
• UNE Line Sharing	• ADSL Provided to Retail
• INP (Standalone)	• Retail Residence and Business (POTS)
• LNP (Standalone)	• Retail Residence and Business (POTS)
• UNE Loop + Port Combinations - Dispatch Out - Non-Dispatch - Dispatch In - Switch-Based	• Retail Residence and Business - Dispatch Out - Non-Dispatch - Dispatch In - Switch-Based
• UNE Switch Ports	• Retail Residence and Business (POTS)
• UNE Combo Other - Dispatch - Non-Dispatch (Dispatch In)	• Retail Residence, Business and Design Dispatch (Including Dispatch Out and Dispatch In) - Dispatch - Non-Dispatch (Dispatch In)
• Local Transport (Unbundled Interoffice Transport)	• Retail DS1/DS3 Interoffice
• UNE Other Non -Design	• Retail Residence and Business
• UNE Other Design	• Retail Design
• Local Interconnection Trunks	• Parity with Retail

SEEM Measure

SEEM Measure		
Yes	Tier I	X
	Tier II	X
	Tier III	

SEEM Disaggregation - Analog/Benchmark

SEEM Disaggregation	SEEM Analog/Benchmark
• Resale POTS	• Retail Residence and Business (POTS)
• Resale Design	• Retail Design
• UNE Loop + Port Combinations	• Retail Residence and Business
• UNE Loops	• Retail Residence and Business Dispatch
• UNE xDSL	• ADSL Provided to Retail
• UNE Line Sharing	• ADSL Provided to Retail
• Local Interconnection Trunks	• Parity with Retail

P-10: Total Service Order Cycle Time (TSOCT)

Definition

This report measures the total service order cycle time from receipt of a valid service order request to the return of a completion notice to the CLEC Interface.

Exclusions

- Canceled Service Orders
- Order Activities of BellSouth or the CLEC associated with internal or administrative use of local services (Record Orders, Listing Orders, Test Orders, etc.)
- D (Disconnect - Except "D" orders associated with LNP Standalone.) and F (From) orders. (From is disconnect side of a move order when the customer moves to a new address).
- "L" Appointment coded orders (where the customer has requested a later than offered interval)
- Orders with CLEC/Subscriber caused delays or CLEC/Subscriber requested due date changes.

Business Rules

The interval is determined for each order processed during the reporting period. This measurement combines three reports: FOC Timeliness, Average Order Completion Interval and Average Completion Notice Interval. For UNE XDSL Loop, this measurement combines Service Inquiry Interval (SI), FOC Timeliness, Average Completion Interval, and Average Completion Notice Interval.

This interval starts with the receipt of a valid service order request and stops when a completion notice is sent to the CLEC Interface (LENS, TAG OR EDI) and the BellSouth Legacy Systems. Elapsed time for each order is accumulated for each reporting dimension. The accumulated time for each reporting dimension is then divided by the associated total number of orders completed. Orders that are worked on zero due dates are calculated with a .33 day interval (8 hours) in order to report a portion of a day interval. These orders are issued and worked/completed on same day. They can be either flow through orders (no field work-non-dispatched) or field orders (dispatched).

Reporting is by Fully Mechanized, Partially Mechanized and Non-Mechanized receipt of LSRs.

Calculation

Total Service Order Cycle Time = (a - b)

- a = Service Order Completion Notice Date
- b = Service Request Receipt Date

Average Total Service Order Cycle Time = (c ÷ d)

- c = Sum of all Total Service Order Cycle Times
- d = Total Number Service Orders Completed in Reporting Period

Total Service Order Cycle Time Interval Distribution (for each interval) = (e ÷ f) X 100

- e = Total Number of Service Requests Completed in "X" minutes/hours
- f = Total Number of Service Requests Received in Reporting Period

Report Structure

- CLEC Specific
- CLEC Aggregate
- BellSouth Aggregate
- Fully Mechanized; Partially Mechanized; Non-Mechanized
- Report in categories of <10 line/circuits; ≥ 10 line/circuits (except trunks)
- Dispatch / No Dispatch categories applicable to all levels except trunks
- Intervals 0-5, 5-10, 10-15, 15-20, 20-25, 25-30, ≥ 30 Days. The interval breakout is: 0-5 = 0-4.99, 5-10 = 5-9.99, 10-15 = 10-14.99, 15-20 = 15-19.99, 20-25 = 20-24.99, 25-30 = 25-29.99, ≥ 30 = 30 and greater.

Data Retained

Relating to CLEC Experience	Relating to BellSouth Experience
• Report Month • Interval for FOC • CLEC Company Name (OCN) • Order Number (PON) • Submission Date & Time (TICKET_ID) • Completion Date (CMPLTN_DT) • Completion Notice Date and Time • Service Type (CLASS_SVC_DESC) • Geographic Scope **Note:** Code in parentheses is the corresponding header found in the raw data file	• Report Month • BellSouth Order Number • Order Submission Date & Time • Order Completion Date & Time • Service Type • Geographic Scope

SQM Disaggregation - Analog/Benchmark

SQM LEVEL of Disaggregation	Retail Analog/Benchmark
• Resale Residence • Resale Business • Resale Design • Resale PBX • Resale Centrex • Resale ISDN • LNP (Standalone) • INP (Standalone) • 2W Analog Loop Design • 2W Analog Loop Non-Design • 2W Analog Loop w/LNP Design • 2W Analog Loop w/LNP Non-Design • UNE Switch Ports • UNE Loop + Port Combinations • UNE Combo Other • UNE xDSL (HDSL, ADSL and UCL) • UNE ISDN • UNE Line Sharing • UNE Other Design • UNE Other Non -Design • UNE Digital Loops < DS1 • UNE Digital Loops ≥ DS1 • Local Transport (Unbundled Interoffice Trans port) • Local Interconnection Trunks	• Diagnostic

SEEM Measure

SEEM Measure		
No	Tier I	
	Tier II	
	Tier III	

SEEM Disaggregation - Analog/Benchmark

SEEM Disaggregation	SEEM Analog/Benchmark
• Not Applicable	• Not Applicable

P-11: Service Order Accuracy

Definition

The "service order accuracy" measurement measures the accuracy and completeness of a sample of BellSouth service orders by comparing what was ordered and what was completed.

Exclusions

- Cancelled Service Orders
- Order Activities of BellSouth or the CLEC associated with internal or administrative use of local services (Record Orders, Listing Orders, Test Orders, etc.)
- D & F orders

Business Rules

A statistically valid sample of service orders, completed during a monthly reporting period, is compared to the original account profile and the order that the CLEC sent to BellSouth. An order is "completed without error" if all service attributes and account detail changes (as determined by comparing the original order) completely and accurately reflect the activity specified on the original order and any supplemental CLEC order. For both small and large sample sizes, when a Service Request cannot be matched with a corresponding Service Order, it will not be counted. For small sample sizes an effort will be made to replace the service request.

Calculation

Percent Service Order Accuracy = (a ÷ b) X 100

- a = Orders Completed without Error
- b = Orders Completed in Reporting Period

Report Structure

- CLEC Aggregate
- Reported in categories of <10 line/circuits; > = 10 line/circuits
- Dispatch / No Dispatch

Data Retained

Relating to CLEC Experience	Relating to BellSouth Experience
• Report Month • CLEC Order Number and PON • Local Service Request (LSR) • Order Submission Date • Committed Due Date • Service Type • Standard Order Activity	• No BellSouth Analog Exist

SQM Disaggregation - Analog/Benchmark

SQM LEVEL of Disaggregation	Retail Analog/Benchmark:
• Resale Residence • Resale Business • Resale Design (Specials) • UNE Specials (Design) • UNE (Non-Design) • Local Interconnection Trunks	• 95% Accurate

SEEM Measure

SEEM Measure		
No	Tier I	
	Tier II	
	Tier III	

SEEM Disaggregation - Analog/Benchmark

SEEM Disaggregation:	SEEM Analog/Benchmark:
• Not Applicable	• Not Applicable

P-12: LNP-Percent Missed Installation Appointments

Definition

"Percent missed installation appointments" monitors the reliability of BellSouth commitments with respect to committed due dates to assure that CLECs can reliably quote expected due dates to their retail customer as compared to BellSouth. This measure is the percentage of total orders processed for which BellSouth is unable to complete the service orders on the committed due dates and reported for total misses and End User Misses.

Exclusions

- Canceled Service Orders
- Order Activities of BellSouth or the CLEC associated with internal or administrative use of local services (Record Orders, Listing Orders, Test Orders, etc.) where identifiable

Business Rules

Percent Missed Installation Appointments (PMI) is the percentage of total orders processed for which BellSouth is unable to complete the service orders on the committed due dates. Missed Appointments caused by end-user reasons will be included and reported in a separate category. The first commitment date on the service order that is a missed appointment is the missed appointment code used for calculation whether it is a BellSouth missed appointment or an End User missed appointment. The "due date" is any time on the confirmed due date, which means there cannot be a cutoff time for commitments as certain types of orders are requested to be worked after standard business hours.

Calculation

LNP Percent Missed Installation Appointments = (a ÷ b) X 100

- a = Number of Orders with Completion date in Reporting Period past the Original Committed Due Date
- b = Number of Orders Completed in Reporting Period

Report Structure

- CLEC Specific
- CLEC Aggregate
- Geographic Scope
  - State/Region
- Report in Categories of <10 lines/circuits ≥ 10 lines/circuits (except trunks)

Report explanation: Total Missed Appointments is the total percent of orders missed either by BellSouth or the CLEC end user. End User MA represents the percentage of orders missed by the CLEC end user. The difference between End User Missed Appointments and Total Missed Appointments is the result of BellSouth caused misses.

Data Retained

Relating to CLEC Experience	Relating to BellSouth Experience
• Report Month • CLEC Order Number and PON (PON) • Committed Due Date (DD) • Completion Date (CMPLTN DD) • Status Type • Status Notice Date • Standard Order Activity • Geographic Scope **Note:** Code in parentheses is the corresponding header found in the raw data file.	• Not Applicable

SQM Disaggregation - Analog/Benchmark

SQM LEVEL of Disaggregation	SQM Retail Analog/Benchmark
• LNP	• Retail Residence and Business (POTS)

SEEM Measure

SEEM Measure		
Yes	Tier I	X
	Tier II	X
	Tier III	

SEEM Disaggregation - Analog/Benchmark

SEEM Disaggregation	SEEM Analog/Benchmark
• LNP	• 95% Due Dates Met[a]

[a]Due to data structure issues, BellSouth is using a benchmark comparison for SEEM rather than the Truncated Z as stated in the Order.

P-13: LNP-Average Disconnect Timeliness Interval & Disconnect Timeliness Interval Distribution

Definition

Disconnect Timeliness is defined as the interval between the time ESI Number Manager receives the valid 'Number Ported' message from NPAC (signifying the CLEC 'Activate') until the time the Disconnect is completed in the Central Office switch. This interval effectively measures BellSouth responsiveness by isolating it from impacts that are caused by CLEC related activities.

Exclusions

- Canceled Service Orders
- Order Activities of BellSouth or the CLEC associated with internal or administrative use of local services (Record Orders, Listing Orders, Test Orders, etc.) where identifiable.

Business Rules

The Disconnect Timeliness interval is determined for each telephone number ported associated with a disconnect service order processed on an LSR during the reporting period. The Disconnect Timeliness interval is the elapsed time from when BellSouth receives a valid 'Number Ported' message in ESI Number Manager (signifying the CLEC 'Activate') for each telephone number ported until each telephone number on the service order is disconnected in the Central Office switch. Elapsed time for each ported telephone number is accumulated for each reporting dimension. The accumulated time for each reporting dimension is then divided by the total number of selected telephone numbers disconnected in the reporting period.

Calculation

Disconnect Timeliness Interval = (a - b)

- a = Completion Date and Time in Central Office switch for each number on disconnect order
- b = Valid 'Number Ported' message received date & time

Average Disconnect Timeliness Interval = (c ÷ d)

- c = Sum of all Disconnect Timeliness Intervals
- d = Total Number of disconnected numbers completed in reporting period

Disconnect Timeliness Interval Distribution (for each interval) = (e ÷ f) X 100

- e = Disconnected numbers completed in "X" days
- f = Total disconnect numbers completed in reporting period

Report Structure

- CLEC Specific
- CLEC Aggregate
- Geographic Scope
  - State, Region

Data Retained

Relating to CLEC Experience	Relating to BellSouth Experience
• Order Number • Telephone Number / Circuit Number • Committed Due Date • Receipt Date / Time (ESI Number Manager) • Date/Time of Recent Change Notice	• Not Applicable

SQM Disaggregation - Analog/Benchmark

SQM LEVEL of Disaggregation:	SQM Retail Analog/Benchmark:
• LNP	• 95% within 15 Minutes

SEEM Measure

SEEM Measure		
Yes	Tier I	X
	Tier II	X
	Tier III	

SEEM Disaggregation - Analog/Benchmark

SEEM Disaggregation	SEEM Analog/Benchmark
• LNP Standalone	• 95% within 15 Minutes

P-14: LNP-Total Service Order Cycle Time (TSOCT)

Definition

Total Service Order Cycle Time measures the interval from receipt of a valid service order request to the completion of the final service order associated with that service request.

Exclusions

- Canceled Service Orders
- Order Activities of BellSouth or the CLEC associated with internal or administrative use of local services (Record Orders, Listing Orders, Test Orders, etc.) where identifiable
- "L" appointment coded orders (indicating the customer has requested a later than offered interval)
- "S" missed appointment coded orders (indicating subscriber missed appointments), except for "SP" codes (indicating subscriber prior due date requested). This would include "S" codes assigned to subsequent due date changes.

Business Rules

The interval is determined for each order processed during the reporting period. This measurement combines three reports: FOC Timeliness, Average Order Completion Interval and Average Completion Notice Interval.

This interval starts with the receipt of a valid service order request and stops when a completion notice is sent to the CLEC Interface (LENS, TAG OR EDI). Elapsed time for each order is accumulated for each reporting dimension. The accumulated time for each reporting dimension is then divided by the associated total number of orders completed. Orders that are worked on zero due dates are calculated with a .33 day interval (8 hours) in order to report a portion of a day interval. These orders are issued and worked/completed on the same day.

Reporting is by Fully Mechanized, Partially Mechanized and Non-Mechanized receipt of LSRs.

Calculation

Total Service Order Cycle Time = (a - b)

- a = Service Order Completion Notice Date
- b = Service Request Receipt Date

Average Total Service Order Cycle Time = (c ÷ d)

- c = Sum of all Total Service Order Cycle Times
- d = Total Number Service Orders Completed in Reporting Period

Total Service Order Cycle Time Interval Distribution (for each interval) = (e ÷ f) X 100

- e = Total Number of Service Orders Completed in "X" minutes/hours
- f = Total Number of Service Orders Received in Reporting Period

Report Structure

- CLEC Specific
- CLEC Aggregate
- Fully Mechanized; Partially Mechanized; Non-Mechanized
- Report in categories of <10 lines/circuits; ≥lines/circuits (except trunks)
- Intervals 0-5, 5-10, 10-15, 15-20, 20-25, 25-30, ≥ 30 Days. The interval breakout is: 0-5 = 0-4.99, 5-10 = 5-9.99, 10-15 = 10-14.99, 15-20 = 15-19.99, 20-25 = 20-24.99, 25-30 = 25-29.99, ≥ 30 = 30 and greater.

Data Retained

Relating to CLEC Experience	Relating to BellSouth Experience
• Report Month • Interval for FOC • CLEC Company Name (OCN) • Order Number (PON) • Submission Date & Time (TICKET_ID) • Completion Date (CMPLTN_DT) • Completion Notice Date and Time • Service Type (CLASS_SVC_DESC) • Geographic Scope **Note:** Code in parentheses is the corresponding header found in the raw data file	• Not Applicable

SQM Disaggregation - Analog/Benchmark

SQM Level of Disaggregation	Retail Analog/Benchmark
• LNP	• Diagnostic

SEEM Measure

SEEM Measure		
No	Tier I	
	Tier II	
	Tier III	

SEEM Disaggregation - Analog/Benchmark

SEEM Disaggregation	SEEM Analog/Benchmark
• Not Applicable	• Not Applicable

Section 4: Maintenance & Repair

M&R-1: Missed Repair Appointments

Definition

The percent of trouble reports not cleared by the committed date and time.

Exclusions

- Trouble tickets canceled at the CLEC request.
- BellSouth trouble reports associated with internal or administrative service.
- Customer Provided Equipment (CPE) troubles or CLEC Equipment Trouble.

Business Rules

The negotiated commitment date and time is established when the repair report is received. The cleared time is the date and time that BellSouth personnel clear the trouble and closes the trouble report in his/her Computer Access Terminal (CAT) or workstation. If this is after the Commitment time, the report is flagged as a "Missed Commitment" or a missed repair appointment. When the data for this measure is collected for BellSouth and a CLEC, it can be used to compare the percentage of the time repair appointments are missed due to BellSouth reasons. (No access reports are not part of this measure because they are not a missed appointment.)

Note: Appointment intervals vary with force availability in the POTS environment. Specials and Trunk intervals are standard interval appointments of no greater than 24 hours. Standalone LNP historical data is not available in the maintenance systems (LMOS or WFA).

Calculation

Percentage of Missed Repair Appointments = (a ÷ b) X 100

- a = Count of Customer Troubles Not Cleared by the Quoted Commitment Date and Time
- b = Total Trouble reports closed in Reporting Period

Report Structure

- Dispatch / Non-Dispatch
- CLEC Specific
- CLEC Aggregate
- BellSouth Aggregate

Data Retained

Relating to CLEC Experience	Relating to BellSouth Performance
• Report month • CLEC Company Name • Submission Date & Time (TICKET_ID) • Completion Date (CMPLTN_DT) • Service Type (CLASS_SVC_DESC) • Disposition and Cause (CAUSE_CD & CAUSE_DESC) • Geographic Scope **Note**: Code in parentheses is the corresponding header found in the raw data file.	• Report month • BellSouth Company Code • Submission Date & Time • Completion Date • Service Type • Disposition and Cause (Non-Design /Non-Special Only) • Trouble Code (Design and Trunking Services) • Geographic Scope

SQM Disaggregation - Retail Analog/Benchmark

SQM Level of Disaggregation	SQM Retail Analog/Benchmark
• Resale Residence	• Retail Residence
• Resale Business	• Retail business
• Resale Design	• Retail Design
• Resale PBX	• Retail PBX
• Resale Centrex	• Retail Centrex
• Resale ISDN	• Retail ISDN
• LNP (Standalone) (Not Available in Maintenance)	• Not Applicable
• 2W Analog Loop Design	• Retail Residence & Business Dispatch
• 2W Analog Loop Non – Design	• Retail Residence & Business (POTS) (Exclusion of Switch-Based Feature Troubles)
• UNE Loop + Port Combinations	• Retail Residence & Business
• UNE Switch Ports	• Retail Residence & Business (POTS)
• UNE Combo Other	• Retail Residence, Business and Design Dispatch
• UNE xDSL (HDSL, ADSL and UCL)	• ADSL Provided to Retail
• UNE ISDN	• Retail ISDN – BRI
• UNE Line Sharing	• ADSL Provided to Retail
• UNE Other Design	• Retail Design
• UNE Other Non – Design	• Retail Residence & Business
• Local Interconnection Trunks	• Parity with Retail
• Local Transport (Unbundled Interoffice Transport)	• Retail DS1/DS3 Interoffice

SEEM Measure

SEEM Measure		
Yes	Tier I	X
	Tier II	X
	Tier III	X

SEEM Disaggregation - Analog/Benchmark

SEEM Disaggregation	SEEM Analog/Benchmark
• Resale POTS	• Retail Residence and Business (POTS)
• Resale Design	• Retail Design
• UNE Loop + Port Combinations	• Retail Residence and Business
• UNE Loops	• Retail Residence and Business Dispatch
• UNE xDSL	• ADSL Provided to Retail
• UNE Line Sharing	• ADSL Provided to Retail
• Local Interconnection Trunks	• Parity with Retail

M&R-2: Customer Trouble Report Rate

Definition

Percent of initial and repeated customer direct or referred troubles reported within a calendar month per 100 lines/circuits in service.

Exclusions

- Trouble tickets canceled at the CLEC request.
- BellSouth trouble reports associated with internal or administrative service.
- Customer Provided Equipment (CPE) troubles or CLEC Equipment Trouble.

Business Rules

Customer Trouble Report Rate is computed by accumulating the number of maintenance initial and repeated trouble reports during the reporting period. The resulting number of trouble reports are divided by the total "number of service" lines, ports or combination that exist for the CLECs and BellSouth respectively at the end of the report month.

Calculation

Customer Trouble Report Rate = (a ÷ b) X 100

- a = Count of Initial and Repeated Trouble Reports closed in the Current Period
- b = Number of Service Access Lines in service at End of the Report Period

Report Structure

- Dispatch / Non-Dispatch
- CLEC Specific
- CLEC Aggregate
- BellSouth Aggregate

Data Retained

Relating to CLEC Experience	Relating to BellSouth Performance
• Report Month • CLEC Company Name • Ticket Submission Date & Time (TICKET_ID) • Ticket Completion Date (CMPLTN_DT) • Service Type (CLASS_SVC_DESC) • Disposition and Cause (CAUSE_CD & CAUSE_DESC) • # Service Access Lines in Service at the end of period • Geographic Scope **Note**: Code in parentheses is the corresponding header found in the raw data file.	• Report Month • BellSouth Company Code • Ticket Submission Date & Time • Ticket Completion Date • Service Type • Disposition and Cause (Non-Design /Non-Special Only) • Trouble Code (Design and Trunking Services) • # Service Access Lines in Service at the end of period • Geographic Scope

SQM Disaggregation - Analog/Benchmark

SQM Level of Disaggregation	SQM Analog/Benchmark
• Resale Residence	• Retail Residence
• Resale Business	• Retail Business
• Resale Design	• Retail Design
• Resale PBX	• Retail PBX
• Resale Centrex	• Retail Centrex
• Resale ISDN	• Retail ISDN
• LNP (Standalone) (Not Available in Maintenance)	• Not Applicable

SQM Level of Disaggregation	SQM Analog/Benchmark
• 2W Analog Loop Design	• Retail Residence & Business Dispatch
• 2W Analog Loop Non – Design	• Retail Residence & Business (POTS) (Exclusion of Switch-Based Feature Troubles)
• UNE Loop + Port Combinations	• Retail Residence & Business
• UNE Switch Ports	• Retail Residence & Business (POTS)
• UNE Combo Other	• Retail Residence, Business and Design Dispatch
• UNE xDSL (HDSL, ADSL and UCL)	• ADSL Provided to Retail
• UNE ISDN	• Retail ISDN – BRI
• UNE Line Sharing	• ADSL Provided to Retail
• UNE Other Design	• Retail Design
• UNE Other Non – Design	• Retail Residence & Business
• Local Interconnection Trunks	• Parity with Retail
• Local Transport (Unbundled Interoffice Transport)	• Retail DS1/DS3 Interoffice

SEEM Measure

SEEM Measure		
Yes	Tier I	X
	Tier II	X
	Tier III	

SEEM Disaggregation - Analog/Benchmark

SEEM Disaggregation	SEEM Analog/Benchmark
• Resale POTS	• Retail Residence and Business (POTS)
• Resale Design	• Retail Design
• UNE Loop + Port Combinations	• Retail Residence and Business
• UNE Loops	• Retail Residence and Business Dispatch
• UNE xDSL	• ADSL Provided to Retail
• UNE Line Sharing	• ADSL Provided to Retail
• Local Interconnection Trunks	• Parity with Retail

M&R-3: Maintenance Average Duration

Definition

The Average duration of Customer Trouble Reports from the receipt of the Customer Trouble Report to the time the trouble report is cleared.

Exclusions

- Trouble tickets canceled at the CLEC request.
- BellSouth trouble reports associated with internal or administrative service.
- Customer Provided Equipment (CPE) troubles or CLEC Equipment Trouble.

Business Rules

For Average Duration the clock starts on the date and time of the receipt of a correct repair request. The clock stops on the date and time the service is restored and the BellSouth or CLEC customer is notified (when the technician completes the trouble ticket on his/her CAT or work systems).

Calculation

Maintenance Duration = (a - b)

- a = Date and Time of Service Restoration
- b = Date and Time Trouble Ticket was Opened

Average Maintenance Duration = (c ÷ d)

- c = Total of all maintenance durations in the reporting period
- d = Total Closed Troubles in the reporting period

Report Structure

- Dispatch / Non-Dispatch
- CLEC Specific
- CLEC Aggregate
- BellSouth Aggregate

Data Retained

Relating to CLEC Experience:	Relating to BellSouth Performance:
• Report Month • Total Tickets (LINE_NBR) • CLEC Company Name • Ticket Submission Date & Time (TICKET_ID) • Ticket Completion Date (CMPLTN_DT) • Service Type (CLASS_SVC_DESC) • Disposition and Cause (CAUSE_CD & CAUSE_DESC) • Geographic Scope **Note**: Code in parentheses is the corresponding header found in the raw data file.	• Report Month • Total Tickets • BellSouth Company Code • Ticket Submission Date • Ticket Submission Time • Ticket Completion Date • Ticket Completion Time • Total Duration Time • Service Type • Disposition and Cause (Non-Design /Non-Special Only) • Trouble Code (Design and Trunking Services) • Geographic Scope

SQM Disaggregation - Analog/Benchmark

SQM Level of Disaggregation	SQM Analog/Benchmark
• Resale Residence	• Retail Residence
• Resale Business	• Retail Business

SQM Level of Disaggregation	SQM Analog/Benchmark
• Resale Design	• Retail Design
• Resale PBX	• Retail PBX
• Resale Centrex	• Retail Centrex
• Resale ISDN	• Retail ISDN
• LNP (Standalone) (Not Available in Maintenance)	• Not Applicable
• 2W Analog Loop Design	• Retail Residence & Business Dispatch
• 2W Analog Loop Non – Design	• Retail Residence & Business (POTS) (Exclusion of Switch-Based Feature Troubles)
• UNE Loop + Port Combinations	• Retail Residence & Business
• UNE Switch Ports	• Retail Residence & Business (POTS)
• UNE Combo Other	• Retail Residence, Business and Design Dispatch
• UNE xDSL (HDSL, ADSL and UCL)	• ADSL Provided to Retail
• UNE ISDN	• Retail ISDN – BRI
• UNE Line Sharing	• ADSL Provided to Retail
• UNE Other Design	• Retail Design
• UNE Other Non – Design	• Retail Residence & Business
• Local Interconnection Trunks	• Parity with Retail
• Local Transport (Unbundled Interoffice Transport)	• Retail DS1/DS3 Interoffice

SEEM Measure

SEEM Measure		
Yes	Tier I	X
	Tier II	X
	Tier III	

SEEM Disaggregation - Analog/Benchmark

SEEM Disaggregation	SEEM Analog/Benchmark
• Resale POTS	• Retail Residence and Business (POTS)
• Resale Design	• Retail Design
• UNE Loop + Port Combinations	• Retail Residence and Business
• UNE Loops	• Retail Residence and Business Dispatch
• UNE xDSL	• ADSL Provided to Retail
• UNE Line Sharing	• ADSL Provided to Retail
• Local Interconnection Trunks	• Parity with Retail

M&R-4: Percent Repeat Troubles within 30 Days

Definition

Closed trouble reports on the same line/circuit as a previous trouble report received within 30 calendar days as a percent of total troubles closed reported

Exclusions

- Trouble tickets canceled at the CLEC request.
- BellSouth trouble reports associated with internal or administrative service.
- Customer Provided Equipment (CPE) troubles or CLEC Equipment Trouble.

Business Rules

Includes Customer trouble reports received within 30 days of an original Customer trouble report

Calculation

Percent Repeat Troubles within 30 Days = (a ÷ b) X 100

- a = Count of closed Customer Troubles where more than one trouble report was logged for the same service line within a continuous 30 days
- b = Total Trouble Reports Closed in Reporting Period

Report Structure

- Dispatch / Non-Dispatch
- CLEC Specific
- CLEC Aggregate
- BellSouth Aggregate

Data Retained

Relating to CLEC Experience	Relating to BellSouth Performance
• Report Month • Total Tickets (LINE_NBR) • CLEC Company Name • Ticket Submission Date & Time (TICKET_ID) • Ticket Completion Date (CMPLTN_DT) • Total and Percent Repeat Trouble Reports within 30 Days (TOT_REPEAT) • Service Type • Disposition and Cause (CAUSE_CD & CAUSE_DESC) • Geographic Scope **Note**: Code in parentheses is the corresponding header found in the raw data file.	• Report Month • Total Tickets • BellSouth Company Code • Ticket Submission Date • Ticket Submission Time • Ticket Completion Date • Ticket Completion Time • Total and Percent Repeat Trouble Reports within 30 Days • Service Type • Disposition and Cause (Non-Design /Non-Special Only) • Trouble Code (Design and Trunking Services) • Geographic Scope

SQM Disaggregation - Analog/Benchmark

SQM Level of Disaggregation	SQM Analog/Benchmark
• Resale Residence	• Retail Residence
• Resale Business	• Retail Business
• Resale Design	• Retail Design
• Resale PBX	• Retail PBX
• Resale Centrex	• Retail Centrex

SQM Level of Disaggregation	SQM Analog/Benchmark
• Resale ISDN	• Retail ISDN
• LNP (Standalone) (Not Available in Maintenance)	• Not Applicable
• 2W Analog Loop Design	• Retail Residence & Business Dispatch
• 2W Analog Loop Non – Design	• Retail Residence & Business (POTS) (Exclusion of Switch-Based Feature Troubles)
• UNE Loop + Port Combinations	• Retail Residence & Business
• UNE Switch Ports	• Retail Residence and Business (POTS)
• UNE Combo Other	• Retail Residence, Business & Design Dispatch
• UNE xDSL (HDSL, ADSL and UCL)	• ADSL Provided to Retail
• UNE ISDN	• Retail ISDN – BRI
• UNE Line Sharing	• ADSL Provided to Retail
• UNE Other Design	• Retail Design
• UNE Other Non – Design	• Retail Residence & Business
• Local Interconnection Trunks	• Parity with Retail
• Local Transport (Unbundled Interoffice Transport)	• Retail DS1/DS3 Interoffice

SEEM Measure

SEEM Measure		
Yes	Tier I	X
	Tier II	X
	Tier III	

SEEM Disaggregation - Analog/Benchmark

SEEM Disaggregation	SEEM Analog/Benchmark
• Resale POTS	• Retail Residence and Business (POTS)
• Resale Design	• Retail Design
• UNE Loop + Port Combinations	• Retail Residence and Business
• UNE Loops	• Retail Residence and Business Dispatch
• UNE xDSL	• ADSL Provided to Retail
• UNE Line Sharing	• ADSL Provided to Retail
• Local Interconnection Trunks	• Parity with Retail

M&R-5: Out of Service (OOS) > 24 Hours

Definition

For Out of Service Troubles (no dial tone, cannot be called or cannot call out) the percentage of Total OOS Troubles cleared in excess of 24 hours. (All design services are considered to be out of service).

Exclusions

- Trouble Reports canceled at the CLEC request
- BellSouth Trouble Reports associated with administrative service
- Customer Provided Equipment (CPE) Troubles or CLEC Equipment Troubles.

Business Rules

Customer Trouble reports that are out of service and cleared in excess of 24 hours. The clock begins when the trouble report is created in LMOS/WFA and the trouble is counted if the elapsed time exceeds 24 hours.

Calculation

Out of Service (OOS) > 24 hours = (a ÷ b) X 100

- a = Total Cleared Troubles OOS > 24 Hours
- b = Total OOS Troubles in Reporting Period

Report Structure

- Dispatch / Non - Dispatch
- CLEC Specific
- BellSouth Aggregate
- CLEC Aggregate

Data Retained

Relating to CLEC Experience	Relating to BellSouth Experience
• Report Month • Total Tickets • CLEC Company Name • Ticket Submission Date & Time (TICKET_ID) • Ticket Completion Date (CMPLTN_DT • Percentage of Customer Troubles out of • Service > 24 Hours (OOS>24_FLAG) • Service type (CLASS_SVC_DESC) • Disposition and Cause (CAUSE_CD & CAUSE-DESC) • Geographic Scope **Note:** Code in parentheses is the corresponding header found in the raw data file.	• Report Month • Total Tickets • BellSouth Company Code • Ticket Submission Date • Ticket Submission time • Ticket Completion Date • Ticket Completion Time • Percent of Customer Troubles out of Service > 24 Hours • Service type • Disposition and Cause (Non-Design/Non-Special only) • Trouble Code (Design and Trunking Services) • Geographic Scope

SQM Disaggregation - Analog/Benchmark

SQM Level of Disaggregation	SQM Analog/Benchmark
• Resale Residence	• Retail Residence
• Resale Business	• Retail Business
• Resale Design	• Retail Design
• Resale PBX	• Retail PBX
• Resale Centrex	• Retail Centrex

SQM Level of Disaggregation	SQM Analog/Benchmark
• Resale ISDN	• Retail ISDN
• LNP (Standalone) (Not Available in Maintenance)	• Not Applicable
• 2W Analog Loop Design	• Retail Residence & Business Dispatch
• 2W Analog Loop Non – Design	• Retail Residence & Business (POTS) (Exclusion of Switch-Based Feature Troubles)
• UNE Loop + Port Combinations	• Retail Residence & Business
• UNE Switch Ports	• Retail Residence & Business (POTS)
• UNE Combo Other	• Retail Residence, Business and Design Dispatch
• UNE xDSL (HDSL, ADSL and UCL)	• ADSL Provided to Retail
• UNE ISDN	• Retail ISDN – BRI
• UNE Line Sharing	• ADSL Provided to Retail
• UNE Other Design	• Retail Design
• UNE Other Non – Design	• Retail Residence & Business
• Local Interconnection Trunks	• Parity with Retail
• Local Transport (Unbundled Interoffice Transport)	• Retail DS1/DS3 Interoffice

SEEM Measure

SEEM Measure		
No	Tier I	
	Tier II	
	Tier III	

SEEM Disaggregation - Analog/Benchmark

SEEM Disaggregation	SEEM Analog/Benchmark
• Not Applicable	• Not Applicable

M&R-6: Average Answer Time – Repair Centers

Definition

This measures the average time a customer is in queue when calling a BellSouth Repair Center.

Exclusions

None

Business Rules

The clock starts when a CLEC Representative or BellSouth customer makes a choice on the Repair Center's menu and is put in queue for the next repair attendant. The clock stops when the repair attendant answers the call (abandoned calls are not included).

Note: The Total Column is a combined BellSouth Residence and Business number.

Calculation

Answer Time for BellSouth Repair Centers = (a - b)

- a = Time BellSouth Repair Attendant Answers Call
- b = Time of entry into queue after ACD Selection

Average Answer Time for BellSouth Repair Centers = (c ÷ d)

- c = Sum of all Answer Times
- d = Total number of calls by reporting period

Report Structure

- CLEC Aggregate
- BellSouth Aggregate

Data Retained

Relating to CLEC Experience	Relating to BellSouth Experience
• CLEC Average Answer Time	• BellSouth Average Answer Time

SQM Disaggregation - Analog / Benchmark

SQM Level of Disaggregation	Retail Analog / Benchmark
• Region. CLEC/BellSouth Service Centers and BellSouth Repair Centers are regional.	• For CLEC, Average Answer Times in UNE Center and BRMC are comparable to the Average Answer Times in the BellSouth Repair Centers.

SEEM Measure

SEEM Measure		
No	Tier I	
	Tier II	
	Tier III	

SEEM Disaggregation - Analog/Benchmark

SEEM Disaggregation	SEEM Analog/Benchmark
• Not Applicable	• Not Applicable

M&R-7: Mean Time To Notify CLEC of Network Outages

Definition

This report measures the time it takes for the BellSouth Network Management Center (NMC) to notify the CLEC of major network outages.

Exclusions

None

Business Rules

BellSouth will inform the CLEC of any major network outages (key customer accounts) via a page or email. When the BellSouth NMC becomes aware of a network incident, the CLEC and BellSouth will be notified electronically. The notification time for each outage will be measured in minutes and divided by the number of outages for the reporting period. These are broadcast messages. It is up to those receiving the message to determine if they have customers affected by the incident.

The CLECs will be notified in accordance with the rules outlined in Appendix D of the CLEC "Customer Guide" which is published on the internet at: www.interconnection.bellsouth.com/guides/other_guides/html/gopue/indexf.htm.

Calculation

Time to Notify CLEC = (a - b)

- a = Date and Time BellSouth Notified CLEC
- b = Date and Time BellSouth Detected Network Incident

Mean Time to Notify CLEC = (c ÷ d)

- c = Sum of all Times to Notify CLEC
- d = Count of Network Incidents

Report Structure

- BellSouth Aggregate
- CLEC Aggregate
- CLEC Specific

Data Retained

Relating to CLEC Experience	Relating to BellSouth Experience
• Report Month • Major Network Events • Date/Time of Incident • Date/Time of Notification	• Report Month • Major Network Events • Date/Time of Incident • Date/Time of Notification

SQM Disaggregation - Analog / Benchmark

SQM Level of Disaggregation	Retail Analog / Benchmark
• BellSouth Aggregate • CLEC Aggregate • CLEC Specific	• Parity by Design

SEEM Measure

SEEM Measure		
No	Tier I	
	Tier II	
	Tier III	

SEEM Disaggregation - Analog/Benchmark

SEEM Disaggregation	SEEM Analog/Benchmark
• Not Applicable	• Not Applicable

Section 5: Billing

B-1: Invoice Accuracy

Definition

This measure provides the percentage of accuracy of the billing invoices rendered to CLECs during the current month.

Exclusions

- Adjustments not related to billing errors (e.g., credits for service outage, special promotion credits, adjustments to satisfy the customer)
- Test Accounts

Business Rules

The accuracy of billing invoices delivered by BellSouth to the CLEC must enable them to provide a degree of billing accuracy comparative to BellSouth bills rendered to retail customers of BellSouth. CLECs request adjustments on bills determined to be incorrect. The BellSouth Billing verification process includes manually analyzing a sample of local bills from each bill period. The bill verification process draws from a mix of different customer billing options and types of service. An end-to-end auditing process is performed for new products and services. Internal measurements and controls are maintained on all billing processes.

Calculation

Invoice Accuracy = [(a - b) ÷ a] X 100

- a = Absolute Value of Total Billed Revenues during current month
- b = Absolute Value of Billing Related Adjustments during current month

Report Structure

- CLEC Specific
- CLEC Aggregate
- BellSouth Aggregate
- Geographic Scope
  - Region
  - State

Data Retained

Relating to CLEC Experience	Relating to BellSouth Performance
• Report Month • Invoice Type - UNE - Resale - Interconnection • Total Billed Revenue • Billing Related Adjustments	• Report month • Retail Type - CRIS - CABS • Total Billed Revenue • Billing Related Adjustments

SQM Disaggregation - Analog/Benchmark

SQM Level of Disaggregation	Retail Analog/Benchmark
• Product / Invoice Type - Resale - UNE - Interconnection	• CLEC Invoice Accuracy is comparable to BellSouth Invoice Accuracy

SEEM Measure

SEEM Measure		
Yes	Tier I	X
	Tier II	X
	Tier III	X

SEEM Disaggregation - Analog/Benchmark

SEEM Disaggregation	SEEM Analog/Benchmark
• CLEC State • BellSouth State	• Parity with Retail

B2: Mean Time to Deliver Invoices

Definition

Bill Distribution is calculated as follows: CRIS BILLS-The number of workdays is reported for CRIS bills. This is calculated by counting the Bill Period date as the first work day. Weekends and holidays are excluded when counting workdays. J/N Bills are counted in the CRIS work day category for the purposes of the measurement since their billing account number (Q account) is provided from the CRIS system.

CABS BILLS-The number of calendar days is reported for CABS bills. This is calculated by counting the day following the Bill Period date as the first calendar day. Weekends and holidays are included when counting the calendar days.

Exclusions

Any invoices rejected due to formatting or content errors.

Business Rules

This report measures the mean interval for timeliness of billing records delivered to CLECs in an agreed upon format. CRIS-based invoices are measured in business days, and CABS-based invoices in calendar days.

Calculation

Invoice Timeliness = (a - b)

- a = Invoice Transmission Date
- b = Close Date of Scheduled Bill Cycle

Mean Time To Deliver Invoices = (c ÷ d)

- c = Sum of all Invoice Timeliness intervals
- d = Count of Invoices Transmitted in Reporting Period

Report Structure

- CLEC Specific
- CLEC Aggregate
- BellSouth Aggregate
- Geographic Scope
  - Region
  - State

Data Retained

Relating to CLEC Experience	Relating to BellSouth Performance
• Report month • Invoice Type - UNE - Resale - Interconnection • Invoice Transmission Count • Date of Scheduled Bill Close	• Report month • Invoice Type - CRIS - CABS • Invoice Transmission Count • Date of Scheduled Bill Close

SQM Disaggregation - Analog/Benchmark

SQM Level of Disaggregation	Retail Analog/Benchmark
Product / Invoice Type • Resale • UNE • Interconnection	• CRIS-based invoices will be released for delivery within six (6) business days. • CABS-based invoices will be released for delivery within eight (8) calendar days. • CLEC Average Delivery Intervals for both CRIS and CABS Invoices are comparable to BellSouth Average delivery for both systems.

SEEM Measure

SEEM Measure		
Yes	Tier I	X
	Tier II	X
	Tier III	X

SEEM Disaggregation - Analog/Benchmark

SEEM Disaggregation	SEEM Analog/Benchmark
• CLEC State - CRIS - CABS • BellSouth Region	• Parity with Retail

B3: Usage Data Delivery Accuracy

Definition

This measurement captures the percentage of recorded usage that is delivered error free and in an acceptable format to the appropriate Competitive Local Exchange Carrier (CLEC). These percentages will provide the necessary data for use as a comparative measurement for BellSouth performance. This measurement captures Data Delivery Accuracy rather than the accuracy of the individual usage recording.

Exclusions

None

Business Rules

The accuracy of the data delivery of usage records delivered by BellSouth to the CLEC must enable them to provide a degree of accuracy comparative to BellSouth bills rendered to their retail customers. If errors are detected in the delivery process, they are investigated, evaluated and documented. Errors are corrected and the data retransmitted to the CLEC.

Calculation

Usage Data Delivery Accuracy = (a - b) ÷ a X 100

- a = Total number of usage data packs sent during current month
- b = Total number of usage data packs requiring retransmission during current month

Report Structure

- CLEC Specific
- CLEC Aggregate
- BellSouth Aggregate
- Geographic Scope
  - Region

Data Retained

Relating to CLEC Experience	Relating to BellSouth Performance
• Report Month • Record Type - BellSouth Recorded - Non-BellSouth Recorded	• Report month • Record Type

SQM Disaggregation - Analog/Benchmark

SQM Level of Disaggregation	Retail Analog/Benchmark
• Region	• CLEC Usage Data Delivery Accuracy is comparable to BellSouth Usage Data Delivery Accuracy

SEEM Measure

SEEM Measure		
Yes	Tier I	X
	Tier II	X
	Tier III	

SEEM Disaggregation - Analog/Benchmark

SEEM Disaggregation	SEEM Analog/Benchmark
• CLEC State • BellSouth Region	• Parity with Retail

B4: Usage Data Delivery Completeness

Definition

This measurement provides percentage of complete and accurately recorded usage data (usage recorded by BellSouth and usage recorded by other companies and sent to BellSouth for billing) that is processed and transmitted to the CLEC within thirty (30) days of the message recording date. A parity measure is also provided showing completeness of BellSouth messages processed and transmitted via CMDS. BellSouth delivers its own retail usage from recording location to billing location via CMDS as well as delivering billing data to other companies. Timeliness, Completeness and Mean Time to Deliver Usage measures are reported on the same report.

Exclusions

None

Business Rules

The purpose of these measurements is to demonstrate the level of quality of usage data delivered to the appropriate CLEC. Method of delivery is at the option of the CLEC.

Calculation

Usage Data Delivery Completeness = (a ÷ b) X 100

- a = Total number of Recorded usage records delivered during current month that are within thirty (30) days of the message recording date
- b = Total number of Recorded usage records delivered during the current month

Report Structure

- CLEC Specific
- CLEC Aggregate
- BellSouth Aggregate
- Region

Data Retained

Relating to CLEC Experience	Relating to BellSouth Performance
• Report Month • Record Type - BellSouth Recorded - Non-BellSouth Recorded	• Report month • Record Type

SQM Disaggregation - Analog/Benchmark

SQM Level of Disaggregation	Retail Analog/Benchmark
• Region	• CLEC Usage Data Delivery Completeness is comparable to BellSouth Usage Data Delivery Completeness

SEEM Measure

SEEM Measure		
No	Tier I	
	Tier II	
	Tier III	

SEEM Disaggregation - Analog/Benchmark

SEEM Disaggregation	SEEM Analog/Benchmark
• Not Applicable	• Not Applicable

B5: Usage Data Delivery Timeliness

Definition

This measurement provides a percentage of recorded usage data (usage recorded by BellSouth and usage recorded by other companies and sent to BellSouth for billing) that is delivered to the appropriate CLEC within six (6) calendar days from the receipt of the initial recording. A parity measure is also provided showing timeliness of BellSouth messages processed and transmitted via CMDS. Timeliness, Completeness and Mean Time to Deliver Usage measures are reported on the same report.

Exclusions

None

Business Rules

The purpose of this measurement is to demonstrate the level of timeliness for processing and transmission of usage data delivered to the appropriate CLEC. The usage data will be mechanically transmitted or mailed to the CLEC data processing center once daily. The Timeliness interval of usage recorded by other companies is measured from the date BellSouth receives the records to the date BellSouth distributes to the CLEC. Method of delivery is at the option of the CLEC.

Calculation

Usage Data Delivery Timeliness Current month = (a ÷ b) X 100

- a = Total number of usage records sent within six (6) calendar days from initial recording/receipt
- b = Total number of usage records sent

Report Structure

- CLEC Aggregate
- CLEC Specific
- BellSouth Aggregate
- Region

Data Retained

Relating to CLEC Experience	Relating to BellSouth Performance
• Report Month • Record Type - BellSouth Recorded - Non-BellSouth Recorded	• Report Monthly • Record Type

SQM Level of Disaggregation - Analog/Benchmark

SQM Level of Disaggregation	Retail Analog/Benchmark
• Region	• CLEC Usage Data Delivery Timeliness is comparable to BellSouth Usage Data Delivery Timeliness

SEEM Measure

SEEM Measure		
No	Tier I	
	Tier II	
	Tier III	

SEEM Disaggregation - Analog/Benchmark

SEEM Disaggregation	SEEM Analog/Benchmark
• Not Applicable	• Not Applicable

B6: Mean Time to Deliver Usage

Definition

This measurement provides the average time it takes to deliver Usage Records to a CLEC. A parity measure is also provided showing timeliness of BellSouth messages processed and transmitted via CMDS. Timeliness, Completeness and Mean Time to Deliver Usage measures are reported on the same report.

Exclusions

None

Business Rules

The purpose of this measurement is to demonstrate the average number of days it takes BellSouth to deliver Usage data to the appropriate CLEC. Usage data is mechanically transmitted or mailed to the CLEC data processing center once daily. Method of delivery is at the option of the CLEC.

Calculation

Mean Time to Deliver Usage = (a X b) ÷ c

- a = Volume of Records Delivered
- b = Estimated number of days to deliver
- c = Total Record Volume Delivered

Note: Any usage record falling in the 30+ day interval will be added using an average figure of 31.5 days.

Report Structure

- CLEC Aggregate
- CLEC Specific
- BellSouth Aggregate
- Region

Data Retained

Relating to CLEC Experience	Relating to BellSouth Performance
• Report Month • Record Type - BellSouth Recorded - Non-BellSouth Recorded	• Report Monthly • Record Type

SQM Level of Disaggregation - Analog/Benchmark

SQM Level of Disaggregation	Retail Analog/Benchmark
• Region	• Mean Time to Deliver Usage to CLEC is comparable to Mean Time to Deliver Usage to BellSouth

SEEM Measure

SEEM Measure		
No	Tier I	
	Tier II	
	Tier III	

SEEM Disaggregation - Analog/Benchmark

SEEM Disaggregation	SEEM Analog/Benchmark
• Not Applicable	• Not Applicable

B7: Recurring Charge Completeness

Definition

This measure captures percentage of fractional recurring charges appearing on the correct bill.

Exclusions

None

Business Rules

The effective date of the recurring charge must be within 30 days of the bill date for the charge to appear on the correct bill.

Calculation

Recurring Charge Completeness = (a ÷ b) X 100

- a = Count of fractional recurring charges that are on the correct bill[1]
- b = Total count of fractional recurring charges that are on the correct bill

[1]Correct bill = next available bill

Report Structure

- CLEC Specific
- CLEC Aggregate
- BellSouth Aggregate

Data Retained

Relating to CLEC Experience	Relating to BellSouth Experience
• Report month • Invoice type • Total recurring charges billed • Total billed on time	• Report month • Retail Analog • Total recurring charges billed • Total billed on time

SQM Level of Disaggregation - Analog/Benchmark

SQM Level of Disaggregation	Retail Analog/Benchmark
Product/Invoice Type	
• Resale	• Parity
• UNE	• Benchmark 90%
• Interconnection	• Benchmark 90%

SEEM Measure

SEEM Measure		
No	Tier I	
	Tier II	
	Tier III	

SEEM Disaggregation - Analog/Benchmark

SEEM Disaggregation	SEEM Analog/Benchmark
• Not Applicable	• Not Applicable

B8: Non-Recurring Charge Completeness

Definition

This measure captures percentage of non-recurring charges appearing on the correct bill.

Exclusions

None

Business Rules

The effective date of the non-recurring charge must be within 30 days of the bill date for the charge to appear on the correct bill.

Calculation

Non-Recurring Charge Completeness = (a ÷ b) X 100

- a = Count of non-recurring charges that are on the correct bill[1]
- b = Total count of non-recurring charges that are on the correct bill

[1]Correct bill = next available bill

Report Structure

- CLEC Specific
- CLEC Aggregate
- BellSouth Aggregate

Data Retained

Relating to CLEC Experience	Relating to BellSouth Experience
• Report month • Invoice type • Total non-recurring charges billed • Total billed on time	• Report month • Retail Analog • Total non-recurring charges billed • Total billed on time

SQM Level of Disaggregation - Analog/Benchmark

SQM Level of Disaggregation	Retail Analog/Benchmark:
Product/Invoice Type	
• Resale	• Parity
• UNE	• Benchmark 90%
• Interconnection	• Benchmark 90%

SEEM Measure

SEEM Measure		
No	Tier I	
	Tier II	
	Tier III	

SEEM Disaggregation - Analog/Benchmark

SEEM Disaggregation	SEEM Analog/Benchmark
• Not Applicable	• Not Applicable

Section 6: Operator Services And Directory Assistance

OS-1: Speed to Answer Performance/Average Speed to Answer - Toll

Definition

Measurement of the average time in seconds calls wait before answered by a toll operator.

Exclusions

None

Business Rules

The clock starts when the customer enters the queue and the clock stops when a BellSouth representative answers the call or the customer abandons the call. The length of each call is determined by measuring, using a scanning technique, and accumulating the elapsed time from the entry of a customer call into the BellSouth call management system queue until the customer call is abandoned or transferred to BellSouth personnel assigned to handle calls for assistance. The system makes no distinction between CLEC customers and BellSouth customers.

Calculation

Speed to Answer Performance/Average Speed to Answer - Toll = a ÷ b

- a = Total queue time
- b = Total calls answered

Note: Total queue time includes time that answered calls wait in queue as well as time abandoned calls wait in queue prior to abandonment.

Report Structure

- Reported for the aggregate of BellSouth and CLECs
  - State

Data Retained (on Aggregate Basis)

- For the items below, BellSouth's Performance Measurement Analysis Platform (PMAP) receives a final computation; therefore, no raw data file is available in PMAP
- Month
- Call Type (Toll)
- Average Speed of Answer

SQM Disaggregation - Analog/Benchmark

SQM Level of Disaggregation	Retail Analog/Benchmark
• None	• Parity by Design

SEEM Measure

SEEM Measure		
No	Tier I	
	Tier II	
	Tier III	

SEEM Disaggregation - Analog/Benchmark

SEEM Disaggregation	SEEM Analog/Benchmark
• Not Applicable	• Not Applicable

OS-2: Speed to Answer Performance/Percent Answered with "X" Seconds – Toll

Definition

Measurement of the percent of toll calls that are answered in less than ten seconds

Exclusions

None

Business Rules

The clock starts when the customer enters the queue and the clock stops when a BellSouth representative answers the call or the customer abandons the call. The length of each call is determined by measuring, using a scanning technique, and accumulating the elapsed time from the entry of a customer call into the BellSouth call management system queue until the customer call is abandoned or transferred to BellSouth personnel assigned to handle calls for assistance. The system makes no distinction between CLEC customers and BellSouth customers.

Calculation

The Percent Answered within "X" Seconds measurement for toll is derived by using the BellCore Statistical Answer Conversion Tables, to convert the Average Speed to Answer measure into a percent of calls answered within "X" seconds. The BellCore Conversion Tables are specific to the defined parameters of work time, number of operators, max queue size and call abandonment rates.

Report Structure

- Reported for the aggregate of BellSouth and CLECs
  - State

Data Retained (on Aggregate Basis)

- For the items below, BellSouth's Performance Measurement Analysis Platform (PMAP) receives a final computation; therefore, no raw data file is available in PMAP
- Month
- Call Type (Toll)
- Average Speed of Answer

SQM Disaggregation - Analog/Benchmark

SQM Level of Disaggregation:	Retail Analog/Benchmark:
• None	• Parity by Design

SEEM Measure

SEEM Measure		
No	Tier I	
	Tier II	
	Tier III	

SEEM Disaggregation - Analog/Benchmark

SEEM Disaggregation	SEEM Analog/Benchmark
• Not Applicable	• Not Applicable

DA-1: Speed to Answer Performance/Average Speed to Answer – Directory Assistance (DA)

Definition

Measurement of the average time in seconds calls wait before answered by a DA operator.

Exclusions

None

Business Rules

The clock starts when the customer enters the queue and the clock stops when a BellSouth representative answers the call or the customer abandons the call. The length of each call is determined by measuring, using a scanning technique, and accumulating the elapsed time from the entry of a customer call into the BellSouth call management system queue until the customer call is abandoned or transferred to BellSouth personnel assigned to handle calls for assistance. The system makes no distinction between CLEC customers and BellSouth customers.

Calculation

Speed to Answer Performance/Average Speed to Answer – Directory Assistance (DA) = a ÷ b

- a = Total queue time
- b = Total calls answered

Note: Total queue time includes time that answered calls wait in queue as well as time abandoned calls wait in queue prior to abandonment.

Report Structure

- Reported for the aggregate of BellSouth and CLECs
  - State

Data Retained (on Aggregate Basis)

- For the items below, BellSouth's Performance Measurement Analysis Platform (PMAP) receives a final computation; therefore, no raw data file is available in PMAP
- Month
- Call Type (DA)
- Average Speed of Answer

SQM Level of Disaggregation - Analog/Benchmark

SQM Level of Disaggregation	Retail Analog/Benchmark
• None	• Parity by Design

SEEM Measure

SEEM Measure		
No	Tier I	
	Tier II	
	Tier III	

SEEM Disaggregation - Analog/Benchmark

SEEM Disaggregation	SEEM Analog/Benchmark
• Not Applicable	• Not Applicable

DA-2: Speed to Answer Performance/Percent Answered within "X" Seconds – Directory Assistance (DA)

Definition

Measurement of the percent of DA calls that are answered in less than twelve seconds.

Exclusions

None

Business Rules

The clock starts when the customer enters the queue and the clock stops when a BellSouth representative answers the call or the customer abandons the call. The length of each call is determined by measuring, using a scanning technique, and accumulating the elapsed time from the entry of a customer call into the BellSouth call management system queue until the customer call is abandoned or transferred to BellSouth personnel assigned to handle calls for assistance. The system makes no distinction between CLEC customers and BellSouth customers.

Calculation

The Percent Answered within "X" Seconds measurement for DA is derived by using the BellCore Statistical Answer Conversion Tables, to convert the Average Speed to Answer measure into a percent of calls answered within "X" seconds. The BellCore Conversion Tables are specific to the defined parameters of work time, number of operators, max queue size and call abandonment rates.

Report Structure

- Reported for the aggregate of BellSouth and CLECs
  - State

Data Retained (on Aggregate Basis)

- For the items below, BellSouth's Performance Measurement Analysis Platform (PMAP) receives a final computation; therefore, no raw data file is available in PMAP.
- Month
- Call Type (DA)
- Average Speed of Answer

SQM Disaggregation - Analog/Benchmark

SQM Level of Disaggregation	Retail Analog/Benchmark
• None	• Parity by Design

SEEM Measure

SEEM Measure		
No	Tier I	
	Tier II	
	Tier III	

SEEM Disaggregation - Analog/Benchmark

SEEM Disaggregation	SEEM Analog/Benchmark
• Not Applicable	• Not Applicable

Section 7: Database Update Information

D-1: Average Database Update Interval

Definition

This report measures the interval from receipt of the database change request to the completion of the update to the database for Line Information Database (LIDB), Directory Assistance and Directory Listings. For E-911, see Section 8.

Exclusions

- Updates Canceled by the CLEC
- Initial update when supplemented by CLEC
- BellSouth updates associated with internal or administrative use of local services.

Business Rules

The interval for this measure begins with the date and time stamp when a service order is completed and the completion notice is released to all systems to be updated with the order information including Directory Assistance, Directory Listings, and Line Information Database (LIDB). The end time stamp is the date and time of completion of updates to the system.

For BellSouth Results:

The BellSouth computation is identical to that for the CLEC with the clarifications noted below.

Other Clarifications and Qualification:

- For LIDB, the elapsed time for a BellSouth update is measured from the point in time when the BellSouth file maintenance process makes the LIDB update information available until the date and time reported by BellSouth that database updates are completed.
- Results for the CLECs are captured and reported at the update level by Reporting Dimension (see below).
- The Completion Date is the date upon which BellSouth issues the Update Completion Notice to the CLEC.
- If the CLEC initiates a supplement to the originally submitted update and the supplement reflects changes in customer requirements (rather than responding to BellSouth initiated changes), then the update submission date and time will be the date and time of BellSouth receipt of a syntactically correct update supplement. Update activities responding to BellSouth initiated changes will not result in changes to the update submission date and time used for the purposes of computing the update completion interval.
- Elapsed time is measured in hours and hundredths of hours rounded to the nearest tenth of an hour.
- Because this should be a highly automated process, the accumulation of elapsed time continues through off-schedule, weekends and holidays; however, scheduled maintenance windows are excluded.

Calculation

Update Interval = (a - b)

- a = Completion Date & Time of Database Update
- b = Submission Date and Time of Database Change

Average Update Interval = (c ÷ d)

- c = Sum of all Update Intervals
- d = Total Number of Updates Completed During Reporting Period

Report Structure

- CLEC Specific (Under development)
- CLEC Aggregate
- BellSouth Aggregate

Data Retained

Relating to CLEC Experience	Relating to BellSouth Performance
• Database File Submission Time • Database File Update Completion Time • CLEC Number of Submissions • Total Number of Updates	• Database File Submission Time • Database File Update Completion Time • BellSouth Number of Submissions • Total Number of Updates

SQM Disaggregation - Analog/Benchmark

SQM LEVEL of Disaggregation:	Retail Analog/Benchmark:
Database Type • LIDB • Directory Listings • Directory Assistance	• Parity by Design

SEEM Measure

SEEM Measure		
No	Tier I	
	Tier II	
	Tier III	

SEEM Disaggregation - Analog/Benchmark

SEEM Disaggregation	SEEM Analog/Benchmark
• Not Applicable	• Not Applicable

D-2: Percent Database Update Accuracy

Definition

This report measures the accuracy of database updates by BellSouth for Line Information Database (LIDB), Directory Assistance, and Directory Listings using a statistically valid sample of LSRs/Orders in a manual review. This manual review is not conducted on BellSouth Retail Orders.

Exclusions

- Updates canceled by the CLEC
- Initial update when supplemented by CLEC
- CLEC orders that had CLEC errors
- BellSouth updates associated with internal or administrative use of local services.

Business Rules

For each update completed during the reporting period, the original update that the CLEC sent to BellSouth is compared to the database following completion of the update by BellSouth. An update is "completed without error" if the database completely and accurately reflects the activity specified on the original and supplemental update (order) submitted by the CLEC. Each database (LIDB, Directory Assistance, and Directory Listings) should be separately tracked and reported.

A statistically valid sample of CLEC Orders are pulled each month. That sample will be used to test the accuracy of the database update process. This is a manual process.

Calculation

Percent Update Accuracy = (a ÷ b) X 100

- a = Number of Updates Completed Without Error
- b = Number Updates Completed

Report Structure

- CLEC Aggregate
- CLEC Specific (not available in this report)
- BellSouth Aggregate (not available in this report)

Data Retained

Relating to CLEC Experience	Relating to BellSouth Performance
• Report Month • CLEC Order Number (so_nbr) and PON (PON) • Local Service Request (LSR) • Order Submission Date • Number of Orders Reviewed **Note**: Code in parentheses is the corresponding header found in the raw data file.	• Not Applicable

SQM Disaggregation - Analog/Benchmark

SQM LEVEL of Disaggregation	Retail Analog/Benchmark:
Database Type • LIDB • Directory Assistance • Directory Listings	• 95% Accurate

SEEM Measure

SEEM Measure		
No	Tier I	
	Tier II	
	Tier III	

SEEM Disaggregation - Analog/Benchmark

SEEM Disaggregation	SEEM Analog/Benchmark
• Not Applicable	• Not Applicable

D-3: Percent NXXs and LRNs Loaded by the LERG Effective Date

Definition

Measurement of the percent of NXX(s) and Location Routing Numbers LRN(s) loaded in end office and/or tandem switches by the Local Exchange Routing Guide (LERG) effective date when facilities are in place. BellSouth has a single provisioning process for both NXX(s) and LRN(s). In this measure, BellSouth will identify whether or not a particular NXX has been flagged as LNP capable (set triggers for dips) by the LERG effective date.

An LRN is assigned by the owner of the switch and is placed into the software translations for every switch to be used as an administrative pointer to route NXX(s) in LNP capable switches. The LRN is a result of Local Number Porting and is housed in a national database provided by the Number Portability Administration Center (NPAC). The switch owner is responsible for notifying NPAC and requesting the effective date that will be reflected in the LERG. The national database downloads routing tables into BellSouth Service Control Point (SCP) regional databases, which are queried by switches when routing ported numbers.

The basic NXX routing process includes the addition of all NXX(s) in the response translations. This addition to response translations is what supports LRN routing. Routing instructions for all NXX(s), including LRN(s), are received from the Advance Routing & Trunking System (ARTS) and all routing, including response, is established based on the information contained in the Translation Work Instructions (TWINs) document.

Exclusions

- Activation requests where the CLEC's interconnection arrangements and facilities are not in place by the LERG effective date.
- Expedite requests

Business Rules

Data for the initial NXX(s) and LRN(s) in a local calling area will be based on the LERG effective date or completion of the initial interconnection trunk group(s), whichever is longer. Data for additional NXX(s) in the local calling area will be based on the LERG effective date. The LERG effective date is loaded into the system at the request of the CLEC. It is contingent upon the CLEC to engineer, order, and install interconnection arrangements and facilities prior to that date.

The total Count of NXX(s) and LRN(s) that were scheduled to be loaded and those that were loaded by the LERG effective date in BellSouth switches will be captured in the Work Force Administration -Dispatch In database.

Calculation

Percent NXXs/LRNs Loaded and Tested Prior to the LERG Effective Date = (a ÷ b) X 100

- a = Count of NXXs and LRNs loaded by the LERG effective date
- b = Total NXXs and LRNs scheduled to be loaded by the LERG effective date

Report Structure

- CLEC Specific
- CLEC Aggregate
- BellSouth (Not Applicable)

Data Retained

Relating to CLEC Experience	Relating to BellSouth Experience
• Company Name • Company Code • NPA/NXX • LERG Effective Date • Loaded Date	• Not Applicable

SQM Disaggregation - Analog/Benchmark

SQM Level of Disaggregation	Retail Analog/Benchmark
• Geographic scope - Region	• 100% by LERG effective date

SEEM Measure

SEEM Measure		
No	Tier I	
	Tier II	
	Tier III	

SEEM Disaggregation - Analog/Benchmark

SEEM Disaggregation	SEEM Analog/Benchmark
• Not Applicable	• Not Applicable

Section 8: E911

E-1: Timeliness

Definition

Measures the percent of batch orders for E911 database updates (to CLEC resale and BellSouth retail records) processed successfully within a 24-hour period.

Exclusions

- Any resale order canceled by a CLEC
- Facilities-based CLEC orders

Business Rules

The 24-hour processing period is calculated based on the date and time processing starts on the batch orders and the date and time processing stops on the batch orders. Mechanical processing starts when SCC (the BellSouth E911 vendor) receives E911 files containing batch orders extracted from the BellSouth Service Order Control System (SOCS). Processing stops when SCC loads the individual records to the E911 database. The E911 database includes updates to the Automatic Location Identification (ALI) database. The system makes no distinction between CLEC resale records and BellSouth retail records.

Calculation

E911 Timeliness = (a ÷ b) X 100

- a = Number of batch orders processed within 24 hours
- b = Total number of batch orders submitted

Report Structure

Reported for the aggregate of CLEC resale updates and BellSouth retail updates

- State
- Region

Data Retained

- Report month
- Aggregate data

SQM Disaggregation - Analog/Benchmark

SQM Level of Disaggregation	Retail Analog/Benchmark
• None	• Parity by Design

SEEM Measure

SEEM Measure		
No	Tier I	
	Tier II	
	Tier III	

SEEM Disaggregation - Analog/Benchmark

SEEM Disaggregation	SEEM Analog/Benchmark
• Not Applicable	• Not Applicable

E-2: Accuracy

Definition

Measures the percent of E911 telephone number (TN) record updates (to CLEC resale and BellSouth retail records) processed successfully for E911 (including the Automatic Location Identification (ALI) database).

Exclusions

- Any resale order canceled by a CLEC
- Facilities-based CLEC orders

Business Rules

Accuracy is based on the number of records processed without error at the conclusion of the processing cycle. Mechanical processing starts when SCC (the BellSouth E911 vendor) receives E911 files containing telephone number (TN) records extracted from BellSouth's Service Order Control System (SOCS). The system makes no distinction between CLEC resale records and BellSouth retail records.

Calculation

E911 Accuracy = (a ÷ b) X 100

- a = Number of record individual updates processed with no errors
- b = Total number of individual record updates

Report Structure

Reported for the aggregate of CLEC resale updates and BellSouth retail updates

- State
- Region

Data Retained

- Report month
- Aggregate data

SQM Disaggregation - Analog/Benchmark

SQM Level of Disaggregation	Retail Analog/Benchmark
• None	• Parity by Design

SEEM Measure

SEEM Measure		
No	Tier I	
	Tier II	
	Tier III	

SEEM Disaggregation - Analog/Benchmark

SEEM Disaggregation	SEEM Analog/Benchmark
• Not Applicable	• Not Applicable

E-3: Mean Interval

Definition

Measures the mean interval processing of E911 batch orders (to update CLEC resale and BellSouth retail records) including processing against the Automatic Location Identification (ALI) database.

Exclusions

- Any resale order canceled by a CLEC
- Facilities-based CLEC orders

Business Rules

The processing period is calculated based on the date and time processing starts on the batch orders and the date and time processing stops on the batch orders. Data is posted is 4-hour increments up to and beyond 24 hours. The system makes no distinction between CLEC resale records and BellSouth retail records.

Calculation

E911 Interval = (a - b)

- a = Date and time of batch order completion
- b = Date and time of batch order submission

E911 Mean Interval = (c ÷ d)

- c = Sum of all E911 Intervals
- d = Number of batch orders completed

Report Structure

Reported for the aggregate of CLEC resale updates and BellSouth retail updates

- State
- Region

Data Retained

- Report month
- Aggregate data

SQM Disaggregation - Analog/Benchmark

SQM Level of Disaggregation	Retail Analog/Benchmark
• None	• Parity by Design

SEEM Measure

SEEM Measure		
No	Tier I	
	Tier II	
	Tier III	

SEEM Disaggregation - Analog/Benchmark

SEEM Disaggregation	SEEM Analog/Benchmark
• Not Applicable	• Not Applicable

Section 9: Trunk Group Performance

TGP-1: Trunk Group Performance-Aggregate

Definition

The Trunk Group Performance report displays, over a reporting cycle, aggregate, average trunk group blocking data for each hour of each day of the reporting cycle, for both CLEC affecting and BellSouth affecting trunk groups.

Exclusions

- Trunk groups for which valid data is not available for an entire study period
- Duplicate trunk group information
- Trunk groups blocked due to CLEC network/equipment failure
- Trunk groups blocked due to CLEC delayed or refused orders
- Trunk groups blocked due to unanticipated significant increases in CLEC traffic
- Final groups actually overflowing, not blocked

Business Rules

The purpose of the Trunk Group Performance Report is to provide trunk blocking measurements on CLEC and BellSouth trunk groups for comparison only. It is not the intent of the report that it be used for network management and/or engineering.

Monthly Average Blocking:

- The reporting cycle includes both business and non-business days in a calendar month.
- Monthly average blocking values are calculated for each trunk group for each of the 24 time consistent hours across a reporting cycle.

Aggregate Monthly Blocking:

- Used to compare aggregate blocking across trunk groups which terminate traffic at CLEC points of presence versus BellSouth switches.
- Aggregate monthly blocking data is calculated for each hour of the day across all trunk groups assigned to a category.

Trunk Categorization:

This report displays, over a reporting cycle, aggregate, average blocking data for each hour of a day. Therefore, for each reporting cycle, 24 blocking data points are generated for two aggregate groups of selected trunk groups. These groups are CLEC affecting and BellSouth affecting trunk groups. In order to assign trunk groups to each aggregate group, all trunk groups are first assigned to a category. A trunk group's end points and the type of traffic that is transmitted on it define a category. Selected categories of trunk groups are assigned to the aggregate groups so that trunk reports can be generated. The categories to which trunk groups have been assigned for this report are as follows.

CLEC Affecting Categories:

	Point A	Point B
Category 1:	BellSouth End Office	BellSouth Access Tandem
Category 3:	BellSouth End Office	CLEC Switch
Category 4:	BellSouth Local Tandem	CLEC Switch
Category 5:	BellSouth Access Tandem	CLEC Switch
Category 10:	BellSouth End Office	BellSouth Local Tandem
Category 16:	BellSouth Tandem	BellSouth Tandem

BellSouth Affecting Categories:

	Point A	Point B
Category 9:	BellSouth End Office	BellSouth End Office

Calculation

Monthly Average Blocking:

- For each hour of the day, each day's raw data are summed across all valid measurements days in a report cycle for blocked and attempted calls.
- The sum of the blocked calls is divided by the total number of calls attempted in a reporting period.

Aggregate Monthly Blocking:

- For each hour of the day, the monthly sums of the blocked and attempted calls from each trunk group are separately aggregated over all trunk groups within each assigned category.
- The total blocked calls is divided by the total call attempts within a group to calculate an aggregate monthly blocking for each assigned group.
- The result is an aggregate monthly average blocking value for each of the 24 hours by group.
- The difference between the CLEC and BellSouth affecting trunk groups are also calculated for each hour.

Report Structure

- CLEC Aggregate
- BellSouth Aggregate
  - State

Data Retained

Relating to CLEC Experience	Relating to BellSouth Experience
• Report Month • Total Trunk Groups • Number of Trunk Groups by CLEC • Hourly blocking per trunk group • Hourly usage per trunk group • Hourly call attempts per trunk group	• Report Month • Total Trunk Groups • Aggregate Hourly blocking per trunk group • Hourly usage per trunk group • Hourly call attempts per trunk group

SQM Disaggregation - Analog/Benchmark

SQM Level of Disaggregation	Retail Analog/Benchmark:
• CLEC aggregate • BellSouth aggregate	• Any 2 hour period in 24 hours where CLEC blockage exceeds BellSouth blockage by more than 0.5% using trunk groups 1, 3, 4, 5, 10, 16 for CLECs and 9 for BellSouth

SEEM Measure

SEEM Measure		
Yes	Tier I	
	Tier II	X
	Tier III	X

SEEM Disaggregation - Analog/Benchmark

SEEM Disaggregation	SEEM Analog/Benchmark:
• CLEC aggregate • BellSouth aggregate	• Any 2 hour period in 24 hours where CLEC blockage exceeds BellSouth blockage by more than 0.5% using trunk groups 1,3,4,5,10,16 for CLECs and 9 for BellSouth

TGP-2: Trunk Group Performance-CLEC Specific

Definition

The Trunk Group Performance report displays, over a reporting cycle, aggregate, average trunk group blocking data for each hour of each day of the reporting cycle, for both CLEC affecting and BellSouth affecting trunk groups.

Exclusions

- Trunk Groups for which valid data is not available for an entire study period
- Duplicate trunk group information
- Trunk groups blocked due to CLEC network/equipment failure
- Trunk groups blocked due to CLEC delayed or refused orders
- Trunk groups blocked due to unanticipated significant increases in CLEC traffic
- Final groups actually overflowing, not blocked

Business Rules

The purpose of the Trunk Group Performance Report is to provide trunk blocking measurements on CLEC and BellSouth trunk groups for comparison only. It is not the intent of the report that it be used for network management and/or engineering.

Monthly Average Blocking:

- The reporting cycle includes both business and non-business days in a calendar month.
- Monthly average blocking values are calculated for each trunk group for each of the 24 time consistent hours across a reporting cycle.

Aggregate Monthly Blocking:

- Used to compare aggregate blocking across trunk groups which terminate traffic at CLEC points of presence versus BellSouth switches.
- Aggregate monthly blocking data is calculated for each hour of the day across all trunk groups assigned to a category.

Trunk Categorization:

- This report displays, over a reporting cycle, aggregate, average blocking data for each hour of a day. Therefore, for each reporting cycle, 24 blocking data points are generated for two aggregate groups of selected trunk groups. These groups are CLEC affecting and BellSouth affecting trunk groups. In order to assign trunk groups to each aggregate group, all trunk groups are first assigned to a category. A trunk group's end points and the type of traffic that is transmitted on it define a category. Selected categories of trunk groups are assigned to the aggregate groups so that trunk reports can be generated. The categories to which trunk groups have been assigned for this report are as follows.

CLEC Affecting Categories:

	Point A	Point B
Category 1:	BellSouth End Office	BellSouth Access Tandem
Category 3:	BellSouth End Office	CLEC Switch
Category 4:	BellSouth Local Tandem	CLEC Switch
Category 5:	BellSouth Access Tandem	CLEC Switch
Category 10:	BellSouth End Office	BellSouth Local Tandem
Category 16:	BellSouth Tandem	BellSouth Tandem

BellSouth Affecting Categories:

	Point A	Point B
Category 9:	BellSouth End Office	BellSouth End Office

Calculation:

Monthly Average Blocking:

- For each hour of the day, each day's raw data are summed across all valid measurements days in a report cycle for blocked and attempted calls.
- The sum of the blocked calls is divided by the total number of calls attempted in a reporting period.

Aggregate Monthly Blocking:

- For each hour of the day, the monthly sums of the blocked and attempted calls from each trunk group are separately aggregated over all trunk groups within each assigned category.
- The total blocked calls is divided by the total call attempts within a group to calculate an aggregate monthly blocking for each assigned group.
- The result is an aggregate monthly average blocking value for each of the 24 hours by group.
- The difference between the CLEC and BellSouth affecting trunk groups are also calculated for each hour.

Report Structure

- CLEC Specific
  - State

Data Retained

Relating to CLEC Experience	Relating to BellSouth Experience
• Report Month • Total Trunk Groups • Number of Trunk Groups by CLEC • Hourly blocking per trunk group • Hourly usage per trunk group • Hourly call attempts per trunk group	• Report Month • Total Trunk Groups • Aggregate Hourly blocking per trunk group • Hourly usage per trunk group • Hourly call attempts per trunk group

SQM Disaggregation - Analog/Benchmark

SQM Level of Disaggregation	Retail Analog/Benchmark:
• CLEC trunk group	• Any 2 hour period in 24 hours where CLEC blockage exceeds BellSouth blockage by more than 0.5% using trunk groups 1, 3, 4, 5, 10, 16 for CLECs and 9 for BellSouth

SEEM Measure

SEEM Measure		
Yes	Tier I	X
	Tier II	
	Tier III	

SEEM Disaggregation - Analog/Benchmark

SEEM Disaggregation	SEEM Analog/Benchmark:
• CLEC trunk group • BellSouth trunk group	• Any 2 hour period in 24 hours where CLEC blockage exceeds BellSouth blockage by more than 0.5% using trunk groups 1, 3, 4, 5, 10, 16 for CLECs and 9 for BellSouth

Section 10: Collocation

C-1: Collocation Average Response Time

Definition

Measures the average time (counted in calendar days) from the receipt of a complete and accurate collocation application (including receipt of application fee if required) to the date BellSouth returns a response electronically or in writing. Within 10 calendar days after having received a bona fide application for physical collocation, BellSouth must respond as to whether space is available or not.

Exclusions

Any application canceled by the CLEC

Business Rules

The clock starts on the date that BellSouth receives a complete and accurate collocation application accompanied by the appropriate application fee if required. The clock stops on the date that BellSouth returns a response. The clock will restart upon receipt of changes to the original application request.

Calculation

Response Time = (a - b)

- a = Request Response Date
- b = Request Submission Date

Average Response Time = (c ÷ d)

- c = Sum of all Response Times
- d = Count of Responses Returned within Reporting Period

Report Structure

- Individual CLEC (alias) aggregate
- Aggregate of all CLECs

Data Retained

- Report period
- Aggregate data

SQM Disaggregation - Analog/Benchmark

Level of Disaggregation	Retail Analog/Benchmark
• State • Virtual-Initial • Virtual-Augment • Physical Caged-Initial • Physical Caged-Augment • Physical-Cageless-Initial • Physical Cageless-Augment	• Virtual - 20 Calendar Days • Physical Caged - 30 Calendar Days • Physical Cageless - 30 Calendar Days

SEEM Measure

SEEM Measure		
No	Tier I	
	Tier II	
	Tier III	

SEEM Disaggregation - Analog/Benchmark

SEEM Disaggregation	SEEM Analog/Benchmark
• Not Applicable	• Not Applicable

C-2: Collocation Average Arrangement Time

Definition

Measures the average time (counted in calendar days) from receipt of a complete and accurate Bona Fide firm order (including receipt of appropriate fee if required) to the date BellSouth completes the collocation arrangement and notifies the CLEC.

Exclusions

- Any Bona Fide firm order canceled by the CLEC
- Any Bona Fide firm order with a CLEC-negotiated interval longer than the benchmark interval.

Business Rules

The clock starts on the date that BellSouth receives a complete and accurate Bone Fide firm order accompanied by the appropriate fee. The clock stops on the date that BellSouth completes the collocation arrangement and notifies the CLEC.

Calculation

Arrangement Time = (a - b)

- a = Date Collocation Arrangement is Complete
- b = Date Order for Collocation Arrangement Submitted

Average Arrangement Time = (c ÷ d)

- c = Sum of all Arrangement Times
- d = Total Number of Collocation Arrangements Completed during Reporting Period.

Report Structure

- Individual CLEC (alias) aggregate
- Aggregate of all CLECs

Data Retained

- Report period
- Aggregate data

SQM Disaggregation - Retail Analog/Benchmark

SQM Level of Disaggregation	Retail Analog/Benchmark
• State • Virtual-Initial • Virtual-Augment • Physical Caged-Initial • Physical Caged-Augment • Physical Cageless-Initial • Physical Cageless-Augment	• Virtual - 50 Calendar Days (Ordinary) • Virtual - 75 Calendar Days (Extraordinary) • Physical Caged - 90 Calendar Days • Physical Cageless - 60 Calendar Days (Ordinary) • Physical Cageless - 90 Calendar Days (Extraordinary)

SEEM Measure

SEEM Measure		
No	Tier I	
	Tier II	
	Tier III	

SEEM Disaggregation - Analog/Benchmark

SEEM Disaggregation	SEEM Analog/Benchmark:
• Not Applicable	• Not Applicable

C-3: Collocation Percent of Due Dates Missed

Definition

Measures the percent of missed due dates for both virtual and physical collocation arrangements.

Exclusions

Any Bona Fide firm order canceled by the CLEC

Business Rules

Percent Due Dates Missed is the percent of total collocation arrangements which BellSouth is unable to complete by end of the BellSouth committed due date. The clock starts on the date that BellSouth receives a complete and accurate Bona Fide firm order accompanied by the appropriate fee if required. The arrangement is considered a missed due date if it is not completed on or before the committed due date.

Calculation

% of Due Dates Missed = (a ÷ b) X 100

- a = Number of Completed Orders that were not completed within BellSouth Committed Due Date during Reporting Period
- b = Number of Orders Completed in Reporting Period

Report Structure

- Individual CLEC (alias) aggregate
- Aggregate of all CLECs

Data Retained

- Report period
- Aggregate data

SQM Disaggregation - Analog/Benchmark

SQM Level of Disaggregation	Retail Analog/Benchmark
• State • Virtual-Initial • Virtual-Augment • Physical Caged-Initial • Physical Caged-Augment • Physical Cageless-Initial • Physical Cageless-Augment	• ≥ 95% on time

SEEM Measure

SEEM Measure		
Yes	Tier I	X
	Tier II	X
	Tier III	X

SEEM Disaggregation - Analog/Benchmark

SEEM Disaggregation	SEEM Analog/Benchmark
• All Collocation Arrangements	• ≥ 95% on time.

Section 11: Change Management

CM-1: Timeliness of Change Management Notices

Definition

Measures whether CLECs receive required software release notices on time to prepare for BellSouth interface/system changes so CLEC interfaces are not impaired by change.

Exclusions

- Changes to release dates for reasons outside BellSouth control, such as the system software vendor changes. For example: a patch to fix a software problem.
- Type 6 Change Requests (Defects/Expedites), as defined by the Change Control Process (CCP)

Business Rules

This metric is designed to measure the percent of change management notices sent to the CLECs according to notification standards and time frames set forth in the Change Control Process. The CCP is used by BellSouth and the CLECs to manage requested changes to the BellSouth Local Interfaces.

The clock starts on the notification date. The clock stops on the software release date. When project events occur (scope changes, analysis information, etc.), the software release date may change. A revised notification would be required and the clock would restart. Based on release constraints for defects/expedites, notification may be less than the agreed upon interval in the CCP for new features.

Calculation

Timeliness of Change Management Notices = (a ÷ b) X 100

- a = Total number of Change Management Notifications Sent Within Required Time frames
- b = Total Number of Change Management Notifications Sent

Report Structure

- BellSouth Aggregate

Data Retained

- Report Period
- Notice Date
- Release Date

SQM Level of Disaggregation - Analog/Benchmark

SQM Level of Disaggregation	Retail Analog/Benchmark:
• Region	• 95% $\geq$ 30 days of Release

SEEM Measure

SEEM Measure		
Yes	Tier I	
	Tier II	X
	Tier III	X

SEEM Disaggregation - Analog/Benchmark

SEEM Disaggregation	SEEM Analog/Benchmark
• Region	• 95% ≥ 30 days of Release

CM-2: Change Management Notice Average Delay Days

Definition

Measures the average delay days for change management system release notices sent outside the time frame set forth in the Change Control Process.

Exclusions

- Changes to release dates for reasons outside BellSouth control, such as the system software vendor changes. For example: a patch to fix a software problem.
- Type 6 Change Requests (Defects/Expedites), as defined by the Change Control Process

Business Rules

This metric is designed to measure the percent of change management notices sent to the CLECs according to notification standards and time frames set forth in the Change Control Process. The CCP is used by BellSouth and the CLECs to manage requested changes to the BellSouth Local Interfaces.

The clock starts on the notification due date. The clock stops on the software release date. When project events occur (scope changes, analysis information, etc.), the software release date may change. A revised notification would be required and the clock would restart. Based on release constraints for defects/expedites, notification may be less than the agreed upon interval in the CCP for new features.

Calculation

Change Management Notice Delay Days = (a - b)

- a = Date Notice Sent
- b = Date Notice Due

Change Management Notice Average Delay Days = (c ÷ d)

- c = Sum of all Change Management Notice Delay Days
- d = Total Number of Notices Sent Late

Report Structure

- BellSouth Aggregate

Data Retained

- Report Period
- Notice Date
- Release Date

SQM Disaggregation - Analog/Benchmark

SQM Level of Disaggregation:	Retail Analog/Benchmark:
• Region	• ≤ 8 Days

SEEM Measure

SEEM Measure		
No	Tier I	
	Tier II	
	Tier III	

SEEM Disaggregation - Analog/Benchmark

SEEM Disaggregation	SEEM Analog/Benchmark
• Not Applicable	• Not Applicable

CM-3: Timeliness of Documents Associated with Change

Definition

Measures whether CLECs received requirements or business rule documentation on time to prepare for BellSouth interface/system changes so CLEC interfaces are not impaired by change.

Exclusions

- Documentation for release dates that slip less than 30 days for reasons outside BellSouth control, such as changes due to Regulatory mandate or CLEC request.
- Type 6 Change Requests (Defects/Expedites), as defined by the Change Control Process.

Business Rules

This metric is designed to measure the percent of requirements or business rule documentation sent to the CLECs according to documentation standards and time frames set forth in the Change Control Process. The CCP is used by BellSouth and the CLECs to manage requested changes to the BellSouth Local Interfaces.

The clock starts on the business rule documentation release date. The clock stops on the software release date. When project events occur (scope changes, analysis information, etc.), the software release date may change. Revisions to documentation could be required and the clock would restart.

Calculation

Timeliness of Documents Associated with Change = (a ÷ b) X 100

- a = Change Management Documentation Sent Within Required Time frames after Notices
- b = Total Number of Change Management Documentation Sent

Report Structure

- BellSouth Aggregate

Data Retained

- Report Period
- Notice Date
- Release Date

SQM Level of Disaggregation - Analog/Benchmark

SQM Level of Disaggregation	Retail Analog/Benchmark
• Region	• 95% ≥ 30 days if new features coding is required • 95% ≥ 5 days for documentation defects, corrections or clarifications

SEEM Measure

SEEM Measure		
Yes	Tier I	
	Tier II	X
	Tier III	X

SEEM Disaggregation - Analog/Benchmark

SEEM Disaggregation	SEEM Analog/Benchmark
• Region	• 95% ≥ 30 days of the change

CM-4: Change Management Documentation Average Delay Days

Definition

Measures the average delay days for requirements or business rule documentation sent outside the time frames set forth in the Change Control Process.

Exclusions

- Documentation for release dates that slip less than 30 days for reasons outside BellSouth control, such as changes due to Regulatory mandate or CLEC request.
- Type 6 Change Requests (Defects/Expedites), as defined by the Change Control Process.

Business Rules

This metric is designed to measure the percent of requirements or business rule documentation sent to the CLECs according to documentation standards and time frames set forth in the Change Control Process. The CCP is used by BellSouth and the CLECs to manage requested changes to the BellSouth Local Interfaces.

The clock starts on the business rule documentation release date. The clock stops on the software release date. When project events occur (scope changes, analysis information, etc.), the software release date may change. Revisions to documentation could be required and the clock would restart.

Calculation

Change Management Documentation Delay Days = (a - b)

- a = Date Documentation Provided
- b = Date Documentation Due

Change Management Documentation Average Delay Days = (c ÷ d)

- c = Sum of all CM Documentation Delay Days
- d = Total Change Management Documents Sent

Report Structure

- BellSouth Aggregate

Data Retained

- Report Period
- Notice Date
- Release Date

SQM Level of Disaggregation - Analog/Benchmark

SQM Level of Disaggregation	Retail Analog/Benchmark:
• Region	• ≤ 8 Days

SEEM Measure

SEEM Measure		
No	Tier I	
	Tier II	
	Tier III	

SEEM Disaggregation - Analog/Benchmark

SEEM Disaggregation	SEEM Analog/Benchmark
• Not Applicable	• Not Applicable

CM-5: Notification of CLEC Interface Outages

Definition

Measures the time it takes BellSouth to notify the CLEC of an outage of an interface.

Exclusions

None

Business Rules

This measure is designed to notify the CLEC of interface outages within 15 minutes of BellSouth's verification that an outage has taken place. This metric will be expressed as a percentage.

Calculation

Notification of CLEC Interface Outages = (a ÷ b) X 100

- a = Number of Interface Outages where CLECS are notified within 15 minutes
- b = Total Number of Interface Outages

Report Structure

- CLEC Aggregate

Data Retained

Relating to CLEC Experience	Relating to BellSouth Experience
• Number of Interface Outages • Number of Notifications ≤ 15 minutes	• Not Applicable

SQM Level of Disaggregation - Analog/Benchmark

SQM Level of Disaggregation	Retail Analog/Benchmark
• By interface type for all interfaces accessed by CLECs	• 97% in 15 Minutes

Interface	Applicable to
EDI	CLEC
CSOTS	CLEC
LENS	CLEC
TAG	CLEC
ECTA	CLEC
TAFI	CLEC/BellSouth

SEEM Measure

SEEM Measure		
No	Tier I	
	Tier II	
	Tier III	

SEEM Disaggregation - Analog/Benchmark

SEEM Disaggregation	SEEM Analog/Benchmark
• Not Applicable	• Not Applicable

Section 12: Bona Fide / New Business Request Process

BFR-1: Percentage of BFR/NBR Requests Processed Within 30 Business Days

Definition

Percentage of Bona Fide/New Business Requests processed within 30 business days for the development and purchases of network elements not currently offered.

Exclusions

Any application cancelled by the CLEC

Business Rules

The clock starts when BellSouth receives a complete and accurate application. The clock stops when BellSouth completes application processing for Network Elements that are not operational at the time of the request.

Calculation

Percentage of BFR/NBR Requests Processed Within 30 Business Days = (a ÷ b) X 100

- a = Count of number of requests processed within 30 days
- b = Total number of requests

Report Structure

- Individual CLEC (alias) aggregate
- Aggregate of all CLECs

Data Retained

- Report period
- Aggregate data

SQM Level of Disaggregation - Analog/Benchmark

SQM Level of Disaggregation	Retail Analog/Benchmark
• Region	• 90% ≤ 30 business days

SEEM Measure

SEEM Measure		
No	Tier I	
	Tier II	
	Tier III	

SEEM Disaggregation - Analog/Benchmark

SEEM Disaggregation	SEEM Analog/Benchmark
• Not Applicable	• Not Applicable

BFR-2: Percentage of Quotes Provided for Authorized BFR/NBR Requests Processed Within X (10/30/60) Business Days

Definition

Percentage of quotes provided in response to Bona Fide/New Business Requests within X (10/30/60) business days for network elements not currently offered.

Exclusions

Requests that are subject to pending arbitration

Business Rules

The clock starts when BellSouth receives a complete and accurate application. The clock stops when BellSouth responds back to the application with a price quote.

Calculation

Percentage of Quotes Provided for Authorized BFR/NBR Requests Processed Within X (10/30/60) Business Days = (a ÷ b) X 100

- a = Count of number of requests processed within "X" days
- b = Total number of requests
  where "X" = 10, 30, or 60 days

Report Structure

- New Network Elements that are operational at the time of the request.
- New Network Elements that are ordered by the FCC.
- New Network Elements that are not operational at the time of the request.

Data Retained

- Report period
- Aggregate data

SQM Level of Disaggregation - Analog/Benchmark

SQM Level of Disaggregation	Retail Analog/Benchmark
• Region	• 90% ≤ 10/30/60 business days - Network Elements that are operational at the time of the request – 10 days - Network Elements that are Ordered by the FCC – 30 days - New Network Elements – 90 days

SEEM Measure

SEEM Measure		
No	Tier I	
	Tier II	
	Tier III	

SEEM Disaggregation - Analog/Benchmark

SEEM Disaggregation	SEEM Analog/Benchmark
• Not Applicable	• Not Applicable

Appendix A: Reporting Scope

A-1: Standard Service Groupings

See individual reports in the body of the SQM.

A-2: Standard Service Order Activities

These are the generic BellSouth/CLEC service order activities which are included in the Pre-Ordering, Ordering, and Provisioning sections of this document. It is not meant to indicate specific reporting categories.

Service Order Activity Types

- Service Migrations Without Changes
- Service Migrations With Changes
- Move and Change Activities
- Service Disconnects (Unless noted otherwise)
- New Service Installations

Pre-Ordering Query Types

- Address
- Telephone Number
- Appointment Scheduling
- Customer Service Record
- Feature Availability
- Service Inquiry

Maintenance Query Types:

TAFI - TAFI queries the systems below

- CRIS
- March
- Predictor
- LMOS
  - DLR
  - DLETH
  - LMOSupd
- LNP
- NIW
- OSPCM
- SOCS

Report Levels

- CLEC RESH
- CLEC State
- CLEC Region
- Aggregate CLEC State

- Aggregate CLEC Region
- BellSouth State
- BellSouth Region

Appendix B: Glossary of Acronyms and Terms

Symbols used in calculations

Σ A mathematical symbol representing the sum of a series of values following the symbol.

- A mathematical operator representing subtraction.

+ A mathematical operator representing addition.

÷ A mathematical operator representing division.

( ) Parentheses, used to group mathematical operations which are completed before operations outside the parentheses.

A

ACD: Automatic Call Distributor - A service that provides status monitoring of agents in a call center and routes high volume incoming telephone calls to available agents while collecting management information on both callers and attendants.

Aggregate: Sum total of all items in like category, e.g. CLEC aggregate equals the sum total of all CLECs' data for a given reporting level.

ALEC: Alternative Local Exchange Company = FL CLEC

ADSL: Asymmetrical Digital Subscriber Line

ASR: Access Service Request - A request for access service terminating delivery of carrier traffic into a Local Exchange Carrier's network.

ATLAS: Application for Telephone Number Load Administration System - The BellSouth Operations System used to administer the pool of available telephone numbers and to reserve selected numbers from the pool for use on pending service requests/service orders.

ATLASTN: ATLAS software contract for Telephone Number.

Auto Clarification: The number of LSRs that were electronically rejected from LESOG and electronically returned to the CLEC for correction.

B

BFR: Bona Fide Request

BILLING: The process and functions by which billing data is collected and by which account information is processed in order to render accurate and timely billing.

BOCRIS: Business Office Customer Record Information System (Front-end to the CRIS database.)

BRI: Basic Rate ISDN

BRC: Business Repair Center – The BellSouth Business Systems trouble receipt center which serves business and CLEC customers.

BellSouth : BellSouth Telecommunications, Inc.

C

CABS: Carrier Access Billing System

CCC: Coordinated Customer Conversions

CCP: Change Control Process

Centrex: A business telephone service, offered by local exchange carriers, which is similar to a Private Branch Exchange (PBX) but the switching equipment is located in the telephone company Central Office (CO).

CKTID: A unique identifier for elements combined in a service configuration

CLEC: Competitive Local Exchange Carrier

CLP: Competitive Local Provider = NC CLEC

CM: Change Management

CMDS: Centralized Message Distribution System - Telcordia administered national system used to transfer specially formatted messages among companies.

COFFI: Central Office Feature File Interface - Provides information about USOCs and class of service. COFFI is a part of DOE/SONGS. It indicates all services available to a customer.

COG: Corporate Gateway - Telcordia product designed for the electronic submission of xDSL Local Service Requests.

CRIS: Customer Record Information System - The BellSouth proprietary corporate database and billing system for non-access customers and services.

CRSACCTS: CRIS software contract for CSR information

CRSG: Complex Resale Support Group

C-SOTS: CLEC Service Order Tracking System

CSR: Customer Service Record

CTTG: Common Transport Trunk Group - Final trunk groups between BellSouth & Independent end offices and the BellSouth access tandems.

D

DA: Directory Assistance

DESIGN: Design Service is defined as any Special or Plain Old Telephone Service Order which requires BellSouth Design Engineering Activities.

DISPOSITION & CAUSE: Types of trouble conditions, e.g. No Trouble Found, Central Office Equipment, Customer Premises Equipment, etc.

DLETH: Display Lengthy Trouble History - A history report that gives all activity on a line record for trouble reports in LMOS.

DLR: Detail Line Record - All the basic information maintained on a line record in LMOS, e.g. name, address, facilities, features etc.

DS-0: The worldwide standard speed for one digital voice signal (64000 bps).

DS-1: 24 DS-0s (1.544Mb/sec., i.e. carrier systems)

DOE: Direct Order Entry System - An internal BellSouth service order entry system used by BellSouth Service Representatives to input business service orders in BellSouth format.

DOM: Delivery Order Manager - Telcordia product designed for the electronic submission of xDSL Local Service Requests.

DSAP: DOE (Direct Order Entry) Support Application - The BellSouth Operations System which assists a Service Representative or similar carrier agent in negotiating service provisioning commitments for non-designed services and Unbundled Network Elements.

DSAPDDI: DSAP software contract for schedule information.

DSL: Digital Subscriber Line

DUI: Database Update Information

E

E911: Provides callers access to the applicable emergency services bureau by dialing a 3-digit universal telephone number.

EDI: Electronic Data Interchange - The computer-to-computer exchange of inter and/or intra-company business documents in a public standard format.

ESSX: BellSouth Centrex Service

F

Fatal Reject: LSRs electronically rejected from LEO, which checks to see of the LSR has all the required fields correctly populated.

Flow-Through: In the context of this document, LSRs submitted electronically via the CLEC mechanized ordering process that flow through to the BellSouth OSS without manual or human intervention.

FOC: Firm Order Confirmation - A notification returned to the CLEC confirming that the LSR has been received and accepted, including the specified commitment date.

FX: Foreign Exchange

G

H

HAL: "Hands Off" Assignment Logic - Front end access and error resolution logic used in interfacing BellSouth Operations Systems such as ATLAS, BOCRIS, LMOS, PSIMS, RSAG and SOCS.

HALCRIS: HAL software contract for CSR information

HDSL: High Density Subscriber Loop/Line

I

ILEC: Incumbent Local Exchange Company

INP: Interim Number Portability

ISDN: Integrated Services Digital Network

IPC: Interconnection Purchasing Center

L

LAN: Local Area Network

LAUTO: The automatic processor in the LNP Gateway that validates LSRs and issues service orders.

LCSC: Local Carrier Service Center - The BellSouth center which is dedicated to handling CLEC LSRs, ASRs, and Preordering transactions along with associated expedite requests and escalations.

Legacy System: Term used to refer to BellSouth Operations Support Systems (see OSS)

LENS: Local Exchange Negotiation System - The BellSouth LAN/web server/OS application developed to provide both preordering and ordering electronic interface functions for CLECs.

LEO: Local Exchange Ordering - A BellSouth system which accepts the output of EDI, applies edit and formatting checks, and reformats the Local Service Requests in BellSouth Service Order format.

LERG: Local Exchange Routing Guide

LESOG: Local Exchange Service Order Generator - A BellSouth system which accepts the service order output of LEO and enters the Service Order into the Service Order Control System using terminal emulation technology.

LFACS: Loop Facilities Assessment and Control System

LIDB: Line Information Database

LISC: Local Interconnection Service Center - The center that issues trunk orders.

LMOS: Loop Maintenance Operations System - A BellSouth Operations System that stores the assignment and selected account information for use by downstream OSS and BellSouth personnel during provisioning and maintenance activities.

LMOS HOST: LMOS host computer

LMOSupd: LMOS updates

LMU: Loop Make-up

LMUS: Loop Make-up Service Inquiry

LNP: Local Number Portability - In the context of this document, the capability for a subscriber to retain his current telephone number as he transfers to a different local service provider.

LOOPS : Transmission paths from the central office to the customer premises.

LRN: Location Routing Number

LSR: Local Service Request – A request for local resale service or unbundled network elements from a CLEC.

M

Maintenance & Repair: The process and function by which trouble reports are passed to BellSouth and by which the related service problems are resolved.

MARCH: BellSouth Operations System which accepts service orders, interprets the coding contained in the service order image, and constructs the specific switching system Recent Change command messages for input into end office switches.

N

NBR: New Business Request

NC: "No Circuits" - All circuits busy announcement.

NIW: Network Information Warehouse

NMLI: Native Mode LAN Interconnection

NPA: Numbering Plan Area

NXX: The "exchange" portion of a telephone number.

O

OASIS: Obtain Availability Services Information System - A BellSouth front-end processor, which acts as an interface between COFFI and RNS. This system takes the USOCs in COFFI and translates them to English for display in RNS.

OASISBSN: OASIS software contract for feature/service

OASISCAR: OASIS software contract for feature/service

OASISLPC: OASIS software contract for feature/service

OASISMTN: OASIS software contract for feature/service

OASISNET: OASIS software contract for feature/service

OASISOCP: OASIS software contract for feature/service

ORDERING: The process and functions by which resale services or unbundled network elements are ordered from BellSouth as well as the process by which an LSR or ASR is placed with BellSouth.

OSPCM: Outside Plant Contract Management System - Provides Scheduling Information.

OSS: Operations Support System - A support system or database which is used to mechanize the flow or performance of work. The term is used to refer to the overall system consisting of hardware complex, computer operating system(s), and application which is used to provide the support functions.

OUT OF SERVICE: Customer has no dial tone and cannot call out.

P

PMAP: Performance Measurement Analysis Platform

PMQAP: Performance Measurement Quality Assurance Plan

PON: Purchase Order Number

POTS: Plain Old Telephone Service

PREDICTOR: The BellSouth Operations system which is used to administer proactive maintenance and rehabilitation activities on outside plant facilities, provide access to selected work groups (e.g. RRC & BRC) to Mechanized Loop Testing and switching system I/O ports, and provide certain information regarding the attributes and capabilities of outside plant facilities.

Preordering: The process and functions by which vital information is obtained, verified, or validated prior to placing a service request.

PRI: Primary Rate ISDN

Provisioning: The process and functions by which necessary work is performed to activate a service requested via an LSR or ASR and to initiate the proper billing and accounting functions.

PSIMS: Product/Service Inventory Management System - A BellSouth database Operations System which contains availability information on switching system features and capabilities and on BellSouth service availability. This database is used to verify the availability of a feature or service in an NXX prior to making a commitment to the customer.

PSIMSORB: PSIMS software contract for feature/service.

Q

R

RNS: Regional Negotiation System - An internal BellSouth service order entry system used by BellSouth Consumer Services to input service orders in BellSouth format.

ROS: Regional Ordering System

RRC: Residence Repair Center - The BellSouth Consumer Services trouble receipt center which serves residential customers.

RSAG: Regional Street Address Guide - The BellSouth database, which contains street addresses validated to be accurate with state and local governments.

RSAGADDR: RSAG software contract for address search.

RSAGTN: RSAG software contract for telephone number search.

S

SAC: Service Advocacy Center

SEEM: Self Effectuating Enforcement Mechanism

SOCS: Service Order Control System - The BellSouth Operations System which routes service order images among BellSouth drop points and BellSouth Operations Systems during the service provisioning process.

SOG: Service Order Generator - Telcordia product designed to generate a service order for xDSL.

SOIR: Service Order Interface Record - any change effecting activity to a customer account by service order that impacts 911/E911

SONGS: Service Order Negotiation and Generation System.

T

TAFI: Trouble Analysis Facilitation Interface - The BellSouth Operations System that supports trouble receipt center personnel in taking and handling customer trouble reports.

TAG: Telecommunications Access Gateway – TAG was designed to provide an electronic interface, or machine-to-machine interface for the bi-directional flow of information between BellSouth's OSSs and participating CLECs.

TN: Telephone Number

Total Manual Fallout: The number of LSRs which are entered electronically but require manual entering into a service order generator.

U

UNE: Unbundled Network Element

UCL: Unbundled Copper Link

USOC: Universal Service Order Code

V

W

WATS: Wide Area Telephone Service

WFA: Work Force Administration

WMC: Work Management Center

WTN: Working Telephone Number.

X

Y

Z

Appendix C: BellSouth Audit Policy

BellSouth currently provides many CLECs with certain audit rights as a part of their individual interconnection agreements. However, it is not reasonable for BellSouth to undergo an audit of the SQM for every CLEC with which it has a contract. BellSouth has developed a proposed Audit Plan for use by the parties to an audit. If requested by a Public Service Commission or by a CLEC exercising contractual audit rights, BellSouth will agree to undergo a comprehensive audit of the aggregate level reports for both BellSouth and the CLEC(s) each of the next five (5) years (2001-2005) to be conducted by an independent third party. The results of that audit will be made available to all the parties subject to proper safeguards to protect proprietary information. This aggregate level audit includes the following specifications:

1. The cost shall be borne 50% by BellSouth and 50% by the CLEC or CLECs.
2. The independent third party auditor shall be selected with input from BellSouth, the PSC, if applicable, and the CLEC(s).
3. BellSouth, the PSC and the CLEC(s) shall jointly determine the scope of the audit.

BellSouth reserves the right to make changes to this audit policy as growth and changes in the industry dictate.

AMENDMENT
TO THE
AGREEMENT BETWEEN
MCI WORLDCOM COMMUNICATIONS, INC.
AND
BELLSOUTH TELECOMMUNICATIONS, INC.
DATED JUNE 17, 2002

Pursuant to this Amendment, (the "Amendment"), MCI WorldCom Communications, Inc., ("MCIm"), and BellSouth Telecommunications, Inc. ("BellSouth"), hereinafter referred to collectively as the "Parties," hereby agree to amend that certain Interconnection Agreement between the Parties dated June 17, 2002 ("Agreement") for the state of Tennessee.

WHEREAS, BellSouth and MCIm entered into the Agreement on June 17, 2002, and;

NOW THEREFORE, in consideration of the mutual provisions contained herein and other good and valuable consideration, the receipt and sufficiency of which are hereby acknowledged, the Parties hereby covenant and agree as follows:

1. The Parties agree to add to the rates in Table 1 of Attachment 1, the rates set forth in Exhibit 1 of this Amendment, attached hereto and incorporated herein by this reference.

2. All of the other provisions of the Agreement, dated June 17, 2002, shall remain in full force and effect.

3. Either or both of the Parties are authorized to submit this Amendment to the respective state regulatory authorities for approval subject to Section 252(e) of the Federal Telecommunications Act of 1996.

4. Neither party waives any right to seek clarification from the Commission regarding retroactive application of the rates contained in this Amendment.

IN WITNESS WHEREOF, the Parties hereto have caused this Amendment to be executed by their respective duly authorized representatives on the date indicated below.

MCI WorldCom Communications, Inc.	**BellSouth Telecommunications, Inc.**
By: (Signature on File)	By: (Signature on File)
Name: Marcel Henry	Name: Patrick C. Finlen
Title: Vice President	Title: Assistant Director
Date: 09/11/02	Date: 09/16/02

UNBUNDLED NETWORK ELEMENTS - Tennessee														Attachment: 1		Tab
CATEGORY		RATE ELEMENTS	Interim	Zone	BCS	USOC	RATES($)					Svc Order Submitted Elec per LSR	Svc Order Submitted Manually per LSR	Incremental Charge - Manual Svc Order vs. Electronic-1st	Incremental Charge - Manual Svc Order vs. Electronic-Add'l	Incremental Charge - Manual Svc Order vs. Electronic-Disc 1st
							Rec	Nonrecurring		Nonrecur. Disconnect		OSS Rates($)				
								First	Add'l	First	Add'l	SOMEC	SOMAN	SOMAN	SOMAN	SOMAN
UNBUNDLED LOCAL EXCHANGE SWITCHING(PORTS)																
	Exchange Ports															
	NOTE: Although the Port Rate includes all available features in GA, KY, LA & TN, the desired features will need to be ordered using retail USOCs															
	2-WIRE VOICE GRADE LINE PORT RATES (RES)															
		Tennessee Area Plus Port without Caller ID capability			UEPSR	UEPRR	1.89	9.93	9.19	3.66	2.92			20.35	10.54	13.32
		Tennessee Extended Local Dialing Port without Caller ID capability			UEPSR	UEPWN	1.89	9.93	9.19	3.66	2.92			20.35	10.54	13.32
		Low Usage Line Port without Caller ID capability			UEPSR	UEPRT	1.89	9.93	9.19	3.66	2.92			20.35	10.54	13.32
	2-WIRE VOICE GRADE LINE PORT RATES (BUS)															
		Tennessee Extended Local Dialing Port without Caller ID capability			UEPSB	UEPWO	1.89	9.93	9.19	3.66	2.92			20.35	10.54	13.32
		Tennessee (BUS) inward Collierville and Memphis Local Calling Plan			UEPSB	UEPB2	1.89	9.93	9.19	3.66	2.92			20.35	10.54	13.32
		Tennessee (BUS) 2-Way Collierville and Memphis Local Calling Plan			UEPSB	UEPB3	1.89	9.93	9.19	3.66	2.92			20.35	10.54	13.32
		Incoming Only without Caller ID capability			UEPSB	UEPBE	1.89	9.93	9.19	3.66	2.92			20.35	10.54	13.32
	EXCHANGE PORT RATES (DID & PBX)															
		PBX Trunk Combination, Collierville and Memphis Local Calling Plan			UEPSP	UEPA6	1.79	9.93	9.19	3.66	2.92			20.35	10.54	13.32
		PBX 2-Way Combo First Trunk Collierville and Memphis Local Calling Plan			UEPSP	UEPA7	1.79	9.93	9.19	3.66	2.92			20.35	10.54	13.32
UNBUNDLED PORT/LOOP COMBINATIONS - COST BASED RATES																
	> Cost Based Rates are applied where BellSouth is required by FCC and/or State Commission rule to provide Unbundled Local Switching or Switch Ports.															
	> Features shall apply to the Unbundled Port/Loop Combination - Cost Based Rate section in the same manner as they are applied to the Stand-Alone Unbundled Port section of this Rate Exhibit.															
	> End Office and Tandem Switching Usage and Common Transport Usage rates in the Port section of this rate exhibit shall apply to all combinations of loop/port network elements except for UNE Coin Port/Loop															
	> The first and additional Port nonrecurring charges apply to Not Currently Combined Combos. For Currently Combined Combos, the nonrecurring charges shall be those identified in the Nonrecurring - Currently Combined sections. Additional NRCs may apply also and are categorized accordingly.															
	2-WIRE VOICE GRADE LOOP WITH 2-WIRE LINE PORT (RES)															

UNBUNDLED NETWORK ELEMENTS - Tennessee														Attachment: 1		Tab
CATEGORY		RATE ELEMENTS	Interim	Zone	BCS	USOC	RATES($)					Svc Order Submitted Elec per LSR	Svc Order Submitted Manually per LSR	Incremental Charge - Manual Svc Order vs. Electronic-1st	Incremental Charge - Manual Svc Order vs. Electronic-Add'l	Incremental Charge - Manual Svc Order vs. Electronic-Disc 1st
							Rec	Nonrecurring		Nonrecur. Disconnect		OSS Rates($)				
								First	Add'l	First	Add'l	SOMEC	SOMAN	SOMAN	SOMAN	SOMAN
	2-Wire Voice Grade Line Port Rates (Res)															
		Tennessee Area Plus Port without Caller ID capability			UEPRX	UEPRR	1.70	22.14	15.25	8.45	3.91			30.89	7.03	
		Tennessee Extended Local Dialing Port without Caller ID capability			UEPRX	UEPWN	1.70	22.14	15.25	8.45	3.91			30.89	7.03	
		Low Usage Line Port without Caller ID capability			UEPRX	UEPRT	1.70	22.14	15.25	8.45	3.91			30.89	7.03	
	2-WIRE VOICE GRADE LOOP WITH 2-WIRE LINE PORT (BUS)															
	2-Wire Voice Grade Line Port (Bus)															
		Tennessee Extended Local Dialing Port without Caller ID capability			UEPBX	UEPWO	1.70	22.14	15.25	8.45	3.91			30.89	7.03	
		Tennessee (BUS) inward Collierville and Memphis Local Calling Plan			UEPBX	UEPB2	1.70	22.14	15.25	8.45	3.91			30.89	7.03	
		Tennessee (BUS) 2-Way Collierville and Memphis Local Calling Plan			UEPBX	UEPB3	1.70	22.14	15.25	8.45	3.91			30.89	7.03	
		Incoming Only without Caller ID capability			UEPBX	UEPBE	1.70	22.14	15.25	8.45	3.91			30.89	7.03	
	2-WIRE VOICE GRADE LOOP WITH 2-WIRE LINE PORT (BUS - PBX)															
	2-Wire Voice Grade Line Port Rates (BUS - PBX)															
		PBX Trunk Combination, Collierville and Memphis Local Calling Plan			UEPPX	UEPA6	1.70	22.14	15.25	8.45	3.91			30.89	7.03	
		PBX 2-Way Combo First Trunk Collierville and Memphis Local Calling Plan			UEPPX	UEPA7	1.70	22.14	15.25	8.45	3.91			30.89	7.03	
UNBUNDLED PORT LOOP COMBINATIONS - MARKET RATES																
	> Market Rates shall apply where BellSouth is not required to provide unbundled local switching or switch ports per FCC and/or State Commission rules.															
	This includes unbundled port/loop combinations that are Currently Combined or Not Currently Combined in Zone 1 of the Top 8 MSAS in BellSouth's region for end users with 4 or more DS0 equivalent lines.															
	> The Top 8 MSAs in BellSouth's region are: FL (Orlando, Ft. Lauderdale, Miami); GA (Atlanta); LA (New Orleans); NC (Greensboro-Winston Salem-Highpoint/Charlotte-Gastonia-Rock Hill); TN (Nashville).															
	> BellSouth currently is developing the billing capability to mechanically bill the recurring and non-recurring Market Rates in this section. In the interim where BellSouth cannot bill Market Rates, BellSouth shall bill the rates in the Cost-Based section preceding in lieu of the Market Rates and reserves the right to true-up the billing difference.															
	> The Market Rate for unbundled ports includes all available features in all states.															
	> End Office and Tandem Switching Usage and Common Transport Usage rates in the Port section of this rate exhibit shall apply to all combinations of loop/port network elements except for UNE Coin Port/Loop Combinations which have															
	> For Not Currently Combined scenarios where Market Rates apply, the Nonrecurring charges are listed in the First and Additional NRC columns for each Port USOC. For Currently Combined scenarios, the Nonrecurring charges are listed in the NRC - Currently Combined section. Additional NRCs may apply also and are categorized accordingly.															

UNBUNDLED NETWORK ELEMENTS - Tennessee														Attachment: 1		Tab
CATEGORY		RATE ELEMENTS	Interim	Zone	BCS	USOC	RATES($)					Svc Order Submitted Elec per LSR	Svc Order Submitted Manually per LSR	Incremental Charge - Manual Svc Order vs. Electronic-1st	Incremental Charge - Manual Svc Order vs. Electronic-Add'l	Incremental Charge - Manual Svc Order vs. Electronic-Disc 1st
							Rec	Nonrecurring		Nonrecur. Disconnect		OSS Rates($)				
								First	Add'l	First	Add'l	SOMEC	SOMAN	SOMAN	SOMAN	SOMAN
	2-WIRE VOICE GRADE LOOP WITH 2-WIRE LINE PORT (RES)															
	2-Wire Voice Grade Line Port (Res)															
		Tennessee Area Plus Port without Caller ID capability			UEPRX	UEPRR	14.00	90.00	90.00					30.89	7.03	
		Tennessee Extended Local Dialing Port without Caller ID capability			UEPRX	UEPWN	14.00	90.00	90.00					30.89	7.03	
		Low Usage Line Port without Caller ID capability			UEPRX	UEPRT	14.00	90.00	90.00					30.89	7.03	
	2-WIRE VOICE GRADE LOOP WITH 2-WIRE LINE PORT (BUS)															
	2-Wire Voice Grade Line Port (Bus)															
		Tennessee Extended Local Dialing Port without Caller ID capability			UEPBX	UEPWO	14.00	90.00	90.00					30.89	7.03	
		Tennessee (BUS) inward Collierville and Memphis Local Calling Plan			UEPBX	UEPB2	14.00	90.00	90.00					30.89	7.03	
		Tennessee (BUS) 2-Way Collierville and Memphis Local Calling Plan			UEPBX	UEPB3	14.00	90.00	90.00					30.89	7.03	
		Incoming Only without Caller ID capability			UEPBX	UEPBE	14.00	90.00	90.00					30.89	7.03	
	2-WIRE VOICE GRADE LOOP WITH 2-WIRE LINE PORT (BUS - PBX)															
	2-Wire Voice Grade Line Port Rates (BUS - PBX)															
		PBX Trunk Combination, Collierville and Memphis Local Calling Plan			UEPPX	UEPA6	14.00	90.00	90.00					30.89	7.03	
		PBX 2-Way Combo First Trunk Collierville and Memphis Local Calling Plan			UEPPX	UEPA7	14.00	90.00	90.00					30.89	7.03	

le 1
Incremental Charge - Manual Svc Order vs. Electronic- Disc Add'l
SOMAN
1.40
1.40
1.40
1.40
1.40
1.40
1.40
1.40
1.40

le 1
Incremental Charge - Manual Svc Order vs. Electronic-Disc Add'l

SOMAN

le 1
Incremental Charge - Manual Svc Order vs. Electronic-Disc Add'l
SOMAN

AMENDMENT
TO
MCI WORLDCOM COMMUNICATIONS/BELLSOUTH INTERCONNECTION AGREEMENT
DATED
JUNE 17, 2002

Pursuant to this Amendment to the MCI WorldCom Communications/BellSouth Interconnection Agreement (the "Amendment"), for the state of Tennessee, MCI WorldCom Communications, Inc. ("MCIm") and BellSouth Telecommunications, Inc. ("BellSouth"), hereinafter referred to collectively as the "Parties," hereby agree to amend the MCIm/BellSouth Interconnection Agreement dated June 17, 2002 ("Interconnection Agreement").

NOW THEREFORE, in consideration of the mutual provisions contained herein and other good and valuable consideration, the receipt and sufficiency of which are hereby acknowledged, MCIm and BellSouth hereby covenant and agree as follows:

1. Attachment 3, subsection 2.4.6 is created to read:

   2.4.6 Notwithstanding any other provision of this Agreement, MCIm may request that BellSouth provide Atypical Combinations of unbundled Network Elements. Atypical Combinations are combinations of such network elements that are neither Existing Combinations nor Typical Combinations as these terms are defined above, in this Section. In compliance with FCC Rule 51.315(d), requests for Atypical Combinations of unbundled Network Elements are available through the Bona Fide Request process as set forth in Exhibit 1, Part A of the General Terms and Conditions of this Agreement. Rates for Atypical Combinations of unbundled Network Elements shall be negotiated pursuant to Section 1.4 of Attachment 1 and the Bona Fide Request process.

2. Attachment 3, subsection 2.11 is hereby deleted in its entirety, and replaced with the following:

   2.11 BellSouth shall offer each Network Element individually and, at MCIm's request, shall offer Existing Combinations, Typical Combinations, and, pursuant to subsection 2.4.6, Atypical Combinations. MCIm may order Network Elements individually and combine them itself into other combinations. BellSouth shall not require MCIm to combine Network Elements. BellSouth shall not require MCIm to own or control any local exchange facilities as a condition of offering to MCIm any Network Element or combination.

3. All of the other provisions of the Agreement, dated June 17, 2002, shall remain in full force and effect.

4. Either or both of the Parties are authorized to submit this Amendment to the respective state regulatory authorities for approval subject to Section 252(e) of the Federal Telecommunications Act of 1996.

5. This Amendment is intended to incorporate the decision of the United States Supreme Court in *Verizon vs. FCC*, 122 S.Ct. 1646, (May 13, 2002), and any action resulting from the court's remand to the 8th Circuit Court of Appeals, regarding the effect of such decision and action on MCIm's purchase of new combinations of loop and transport. By executing this Amendment MCIm is not waiving its right to seek additional amendments to the Interconnection Agreement, incorporating said decision.

IN WITNESS WHEREOF, the Parties hereto have caused this Amendment to be executed by their respective duly authorized representatives on the date indicated below.

BellSouth Telecommunications, Inc.	**MCI WorldCom Communications, Inc.**
BY: Signature on File	BY: Signature on File
NAME: Pat Finlen	NAME: C. A. Benson for Marcel Henry
TITLE: Assistant Director	TITLE: Vice President
DATE: September 27, 2002	DATE: September 25, 2002

AMENDMENT
TO THE
AGREEMENT BETWEEN
MCI WORLDCOM COMMUNICATIONS, INC.
AND
BELLSOUTH TELECOMMUNICATIONS, INC.
DATED JUNE 17, 2002

Pursuant to this Amendment, (the "Amendment"), MCI WorldCom Communications, Inc. ("MCIm"), and BellSouth Telecommunications, Inc. ("BellSouth"), hereinafter referred to collectively as the "Parties," hereby agree to amend that certain Interconnection Agreement between the Parties dated June 17, 2002 ("Agreement") and shall be deemed effective as of thirty (30) calendar days after the date of the final signature on this document.

WHEREAS, BellSouth and MCIm entered into the Agreement on June 17, 2002, and;

NOW THEREFORE, in consideration of the mutual provisions contained herein and other good and valuable consideration, the receipt and sufficiency of which are hereby acknowledged, the Parties hereby covenant and agree as follows:

1. The Parties desire to amend the Interconnection Agreement by adding the UNE Service Advancement Date Charge contained in Exhibit 1 to Attachment 1 Table 1;

2. The Parties desire to amend The General Terms and Conditions – Part A, Section 13, to change the MCIm contact information as follows:

   MCI WorldCom Communications, Inc.

   MCI WorldCom, Inc.
   5055 Northpoint Parkway
   Alpharetta, GA 30022
   Attn: Vice President, National Contract & Carrier Management

   Copy to:
   Vice President & Chief Network Counsel
   WorldCom, Inc.
   1133 19th Street
   Washington, DC 20036

   Senior Manager
   Carrier Agreements
   MCI WorldCom, Inc.
   205 North Michigan Avenue
   Chicago, IL 60601

   Commercial Counsel
   MCI WorldCom, Inc.
   5055 Northpoint Parkway
   Alpharetta, GA 30022

3. All of the other provisions of the Agreement, dated June 17, 2002, shall remain in full force and effect.

4. Either or both of the Parties is authorized to submit this Amendment to the respective state regulatory authorities for approval subject to Section 252(e) of the Federal Telecommunications Act of 1996.

IN WITNESS WHEREOF, the Parties hereto have caused this Amendment to be executed by their respective duly authorized representatives on the date indicated below.

MCI WorldCom Communications, Inc.

By: Original on File

Name: Marcel Henry

Title: Vice-President, Nat'l Contract And Carrier Management

Date: 3/4/03

BellSouth Telecommunications, Inc.

By: Original on File

Name: Elizabeth R. A. Shiroishi

Title: Director

Date: 3/7/03

NETWORK ELEMENTS - Tennessee														Attachment:1		Table: 1	
CATEGORY		RATE ELEMENTS	Interim	Zone	BCS	USOC	RATES($)					Svc Order Submitted Elec per LSR	Svc Order Submitted Manually per LSR	Incremental Charge - Manual Svc Order vs. Electronic-1st	Incremental Charge - Manual Svc Order vs. Electronic-Add'l	Incremental Charge - Manual Svc Order vs. Electronic-Disc 1st	Incremental Charge - Manual Svc Order vs. Electronic-Disc Add'l
							Rec	Nonrecurring		Nonrecurring Disconnect		OSS Rates($)					
								First	Add'l	First	Add'l	SOMEC	SOMAN	SOMAN	SOMAN	SOMAN	SOMAN
UNE SERVICE DATE ADVANCEMENT CHARGE																	
	NOTE: The Expedite charge will be maintained commensurate with BellSouth's FCC No.1 Tariff, Section 5 as applicable.																
		UNE Expedite Charge per Circuit or Line Assignable USOC, per Day			ALL UNE	SDASP		200.00									

AMENDMENT
TO THE
AGREEMENT BETWEEN
MCI WORLDCOM COMMUNICATIONS, INC.
AND
BELLSOUTH TELECOMMUNICATIONS, INC.
DATED JUNE 17, 2002

Pursuant to this Amendment, (the "Amendment"), MCI WorldCom Communications, Inc. ("MCIm"), and BellSouth Telecommunications, Inc. ("BellSouth"), hereinafter referred to collectively as the "Parties," hereby agree to amend that certain Interconnection Agreement between the Parties dated June 17, 2002 ("Agreement") and shall be deemed effective as of September 1, 2003.

WHEREAS, BellSouth and MCIm entered into the Agreement on June 17, 2002, and;

NOW THEREFORE, in consideration of the mutual provisions contained herein and other good and valuable consideration, the receipt and sufficiency of which are hereby acknowledged, the Parties hereby covenant and agree as follows:

1. The Parties agree Part A, Section 21.2.3 shall be deleted in its entirety and replaced with the following:

   21.2.3 Subject to reasonable security requirements and at the expense of the auditing Party, either Party may audit the books, records and other documents, including but not limited to PIU, PLU, and PLF reports, of the other Party for the purpose of evaluating usage pertaining to transport and termination of local traffic. The Parties shall retain records of call detail for a minimum of nine months from which usage audits, including a PIU and PLU, can be ascertained. Either Party may request an audit for such purpose once each Contract Year. The auditing party shall employ a mutually acceptable independent third party auditor for this purpose. Any such audit shall take place at a time and place agreed on by the Parties no later than thirty (30) days after notice thereof to the Party being audited.

2. The Parties agree Part A, Section 21.2.6 is created to read:

   21.2.6 Percent Local Facility Each Party shall report to the other on a per state basis a Percent Local Facility (PLF) factor. The application of the PLF will determine the portion of switched dedicated transport to be billed per the local jurisdiction rates. The PLF shall be applied to Multiplexing, Local Channel and Interoffice Channel Switched Dedicated Transport utilized in the provision of local interconnection trunks. Each Party shall update its PLF on the first of January, April, July and October of the year and shall send it to the other Party to be received no later than 30 days after the first of each such month to be effective the first bill period the following month, respectively. Requirements associated with PLU and PLF calculation and reporting shall be as set forth in BellSouth's Jurisdictional Factors Reporting Guide, as it is amended from time to time.

3. The Parties agree Attachment 8, Section 2.1.2.1 is created to read:

   2.1.2.1 MCIm shall order DS1 Combos (DS1 loop plus DS1 interoffice transport) using the Local Service Request ("LSR") process.

4. The Parties agree Attachment 8, Section 3.4.1.1 is deleted in its entirety and replaced with the following:

> 3.4.1.1 For service requests from MCIm to BellSouth, the Parties will use a) an Access Service Request ("ASR") for Local Interconnection Trunks and Facilities purchased pursuant to Attachment 4; and b) a Local Service Request (LSR), for Unbundled Network Elements and Ancillary Services. For any other service requests, MCIm will utilize the request format specified by BellSouth. BellSouth will process and complete service requests at such intervals for FOC returns as shall be established in a generic Commission order or in a Commission order applicable to all carriers generally relating to BellSouth performance measurements. Intervals for installation of Services shall be at such intervals as established in a generic Commission order or in a Commission order applicable to all carriers generally relating to BellSouth performance measurements.

5. The Parties agree Attachment 8, Section 4.2.12.7 is created to read as follows:

> 4.2.12.7 Upon mutual agreement, the parties may modify, clarify or change the billing dispute and escalation procedures set forth herein for any particular disputes.

6. The Parties shall delete Section 9.4, 9.4.1, 9.4.2, 9.4.3 and 9.4.4 of Attachment 4 of the Interconnection Agreement and in lieu thereof shall substitute the following:

> 9.4 Beginning May 1, 2003, the terminating Party will bill the originating Party a rate of $.0007 per minute of use (MOU) for Local Traffic delivered to the terminating Party. This rate is a composite rate. Neither Party shall charge the other for any other rate elements associated with reciprocal compensation.
>
> 9.4.1 Left Blank Intentionally
>
> 9.4.2 Left Blank Intentionally
>
> 9.4.3 Left Blank Intentionally
>
> 9.4.4 Left Blank Intentionally

7. The Parties agree Attachment 4, Section 9.7.2.1 shall be created to read:

> 9.7.2.1 The Parties acknowledge that in certain instances it is not technically feasible for BellSouth to provide EMI data for Transit Traffic, including but not limited to misrouting by the originating carrier and misrouting due to number portability. The Parties acknowledge that misrouting due to number portability is an industry problem that has been recognized, but not resolved, by the Ordering and Billing Forum. BellSouth is developing a solution that will be implemented no later than October 1, 2003. Provided that BellSouth's solution allows call detail information to be recorded and delivered for traffic that has been misrouted due to number portability, BellSouth will provide such records to MCIm. Further, BellSouth shall cooperate with MCIm to provide information to MCIm and otherwise cooperate with MCIm to allow MCIm to bill any carrier for whom BellSouth transmitted traffic to MCIm, and BellSouth shall provide available information to MCIm necessary to the resolution of any such billing dispute, or necessary to allow MCIm to identify the volume and identity of the third parties originating such traffic.

8. The Parties hereby mutually agree to incorporate into Table 1 of Attachment 1 of the Agreement the rates set forth in Exhibit A to this Amendment, which is attached hereto and incorporated herein by this reference.

9. All of the other provisions of the Agreement, dated June 17, 2002, shall remain in full force and effect.

10. Either or both of the Parties are authorized to submit this Amendment to the respective state regulatory authorities for approval subject to Section 252(e) of the Federal Telecommunications Act of 1996.

IN WITNESS WHEREOF, the Parties have executed this Agreement the day and year written below.

BellSouth Telecommunications, Inc.

By: Pat C Finl

Name: PATRICK FINLEY

Title: DIRECTOR

Date: 8/28/03

MCI WorldCom Communications, Inc.

By: Marcel Henry

Name: Marcel Henry

Title: Vice President - NCCM

Date: 8/26/03

LOCAL INTERCONNECTION - Tennessee														Attachment: 1		Table: 1		
CATEGORY		RATE ELEMENTS	Interim	Zone	BCS	USOC	RATES ($)					Svc Order Submitted Elec per LSR	Svc Order Submitted Manually per LSR	Incremental Charge - Manual Svc Order vs. Electronic-1st	Incremental Charge - Manual Svc Order vs. Electronic-Add'l	Incremental Charge - Manual Svc Order vs. Electronic-Disc 1st	Incremental Charge - Manual Svc Order vs. Electronic-Disc Add'l	
							Rec	Nonrecurring		Nonrecurring Disconnect		OSS Rates ($)						
								First	Add'l	First	Add'l	SOMEC	SOMAN	SOMAN	SOMAN	SOMAN	SOMAN	
LOCAL INTERCONNECTION (CALL TRANSPORT AND TERMINATION)																		
	INTERCARRIER COMPENSATION FOR LOCAL TRAFFIC AND ISP-BOUND TRAFFIC																	
		Single Rate for Local Traffic and ISP-bound Traffic, per MOU (6/14/03-10/5/03)					0.0007											

Amendment to the Agreement
Between
MCI WorldCom Communications, Inc.
and
BellSouth Telecommunications, Inc.
Dated June 17, 2002

Pursuant to this Amendment, (the "Amendment"), MCI WorldCom Communications, Inc. (MCIm), and BellSouth Telecommunications, Inc. ("BellSouth"), hereinafter referred to collectively as the "Parties," hereby agree to amend that certain Interconnection Agreement between the Parties for the State of Tennessee dated June 17, 2002 ("Agreement").

WHEREAS, BellSouth and MCIm entered into the Agreement on June 17, 2002, and;

WHEREAS, BellSouth and MCIm desire to amend the Agreement in order to modify provisions pursuant to the August 5, 2003 United States Bankruptcy Court Order approving the settlement and compromise of certain matters ("Settlement Agreement") with BellSouth Telecommunications, Inc. and WorldCom, Inc.;

NOW THEREFORE, in consideration of the mutual provisions contained herein and other good and valuable consideration, the receipt and sufficiency of which are hereby acknowledged, the Parties hereby covenant and agree as follows:

1. The Parties agree Section 4.2.12 of Attachment 8 shall be deleted in its entirety and replaced with the following:

   4.2.12 The disputing Party must document its claim to the other Party in writing. If the Parties are unable to resolve the dispute to their mutual satisfaction, either Party may file a complaint with the Commission/Board in accordance with the Commission's/Board's rules of procedure. For purposes of this Agreement, the Dispute Date is the date on which the disputing Party presents sufficient documentation to support a claim. The disputing Party will make full payment including any disputed amounts to the billing Party within thirty (30) calendar days after the Bill Date.

2. The Parties agree Sections 4.2.12.3.1 and 4.2.12.3.2 of Attachment 8 shall be deleted in their entirety and replaced with the following:

   4.2.12.3.1 Left Blank Intentionally

   4.2.12.3.2 Left Blank Intentionally

3. The Parties agree Section 4.2.18.1 of Attachment 8 shall be deleted in its entirety and replaced with the following:

4.2.18.1 Under no circumstances shall MCI withhold any payment at any time during the processing of a billing dispute. If payment of account is not received by the Bill Date in the month after the original Bill Date, the billing Party may provide written notice to the billed Party, that additional applications for Service will be refused and that any pending orders for Service will not be completed if payment is not received by the fifteenth (15th) calendar day following the date of the notice. In addition the billing Party may, at the same time, give thirty (30) calendar days notice to the person designated by the billed Party to receive notices of noncompliance, and discontinue the provision of existing services to the billed Party at any time thereafter without further notice. Notwithstanding any other provision of this Agreement, BellSouth may deny, disconnect, discontinue, or refuse applications for those services for which MCIm has not made payment. If the Parties are still unable to resolve the dispute, then the Parties may pursue all dispute resolution measures available under this Agreement.

4. All other provisions in the Agreement dated June 17, 2002 shall remain unchanged and in full force and effect.

5. Either or both of the Parties are authorized to submit this Amendment to the respective state regulatory authorities for approval subject to Section 252(e) of the Act. However, by filing this amendment incorporating said rates, neither Party waives its right to file opposition to the approval of this Amendment under Section 252(e)(2) nor does either Party waive its rights to seek judicial review of the rates contained herein.

6. The provisions of Paragraph 3 of this Amendment shall be effective as November 18, 2003, and shall continue for a period of two years from the Settlement Effective Date, as that term is defined in the Settlement Agreement. To the extent necessary to give effect to the two-year term, the provisions of Paragraph 3 of this Amendment shall survive the expiration of the Agreement.

IN WITNESS WHEREOF, the Parties have executed this Agreement the day and year written below.

BellSouth Telecommunications, Inc.	**MCI WorldCom Communications, Inc.**
By: Pat C Finlen	By: Marcel Henry
Name: PAT C. FINLEN	Name: Marcel Henry
Title: DIRECTOR	Title: VP
Date: 12/17/03	Date: 12/15/03

Amendment to the Agreement
Between
MCI WorldCom Communications, Inc.
and
BellSouth Telecommunications, Inc.
Dated June 17, 2002

Pursuant to this Amendment, (the "Amendment"), MCI WorldCom Communications, Inc. (MCIm), and BellSouth Telecommunications, Inc. ("BellSouth"), hereinafter referred to collectively as the "Parties," hereby agree to amend that certain Tennessee Interconnection Agreement between the Parties dated June 17, 2002 ("Agreement") to be effective thirty (30) calendar days after the date of the last signature executing the Amendment.

WHEREAS, BellSouth and MCIm entered into the Agreement on June 17, 2002, and;

WHEREAS, BellSouth and MCIm desire to amend the Agreement to add additional rates, terms and conditions;

WHEREAS, BellSouth and MCIm are amending the Agreement to modify the Local Number Portability (LNP) recovery charge pursuant to the Order in the matter of the Telephone Number Portability BellSouth Corporation Petition for Declaratory Ruling and/or Waiver, CC Docket No. 95-116, released April 13, 2004;

NOW THEREFORE, in consideration of the mutual provisions contained herein and other good and valuable consideration, the receipt and sufficiency of which are hereby acknowledged, the Parties hereby covenant and agree as follows:

1. The Parties agree to add to the rates in Table 1 of Attachment 1, the rates set forth in Exhibit 1 of this Amendment, attached hereto and incorporated herein by this reference.

2. The Parties agree to add the following language to Attachment 3 as Section 5.7.5.9:

   5.7.5.9 On/Off Premises Extensions and Different Premises Addresses working with 2-wire voice grade port, voice grade Loop, unbundled end office switching, unbundled end office trunk port, common transport per mile per MOU, common transport facilities termination, tandem switching, and tandem trunk port.

3. The Parties agree to add to the rates in Table 1 of Attachment 1, the rates set forth in Exhibit 2 of this Amendment, attached hereto and incorporated herein by this reference.

4. The Parties agree Section 2.5.1 of Part A of the General Terms and Conditions is created to read:

   2.5.1 MCIm shall waive its right pursuant to Section 252(i) of the Act to adopt language from any other interconnection agreement filed and approved by any state public service commission that would effectively replace, supersede or conflict with the language to which the parties have agreed as set

forth in the Percent Local Facility ("PLF") Factor, Reciprocal Compensation and Transit Traffic Amendment effective September 1, 2003. To the extent that MCIm requests adoption of any other such interconnection agreement pursuant to the Section 252(i) of the Act, the Parties shall modify the adopted agreement to delete the language in such agreement pertaining to the language expressly agreed upon in the PLF Factor, Reciprocal Compensation and Transit Traffic Amendment and to incorporate the language set forth in the PLF Factor, Reciprocal Compensation and Transit Traffic Amendment.

5. The Parties agree to delete in their entirety all rate elements and USOCs identified as "Local Number Portability charges" in Table 1 of Attachment 1, as specified by the following USOCs: LNPCX, LNPCP, LNPCN, and LNPCC.

6. The Parties agree to add the following language as Sections 5.7.2 and 7.8 of Attachment 3:

   5.7.2 (and 7.8) MCIm shall pay to BellSouth the Local Number Portability charges as set forth in Section 13 of the BellSouth FCC No. 1 Tariff.

7. All of the other provisions of the Agreement, dated June 17, 2002, shall remain in full force and effect.

8. Either or both of the Parties are authorized to submit this Amendment to the respective state regulatory authorities for approval subject to Section 252(e) of the Federal Telecommunications Act of 1996.

IN WITNESS WHEREOF, the Parties have executed this Agreement the day and year written below.

BellSouth Telecommunications, Inc.

By: Kristen E Rowe

Name: KRISTEN E. ROWE

Title: DIRECTOR

Date: 9/1/04

MCI WorldCom Communications, Inc.

By:

Name: Michael Beach

Title: Vice President, Carrier Management

Date: 8/24/04

UNBUNDLED NETWORK ELEMENTS - Tennessee														Attachment: 1		Table: 1	
CATEGORY		RATE ELEMENTS	Interim	Zone	BCS	USOC	RATES($)					Svc Order Submitted Elec per LSR	Svc Order Submitted Manually per LSR	Incremental Charge - Manual Svc Order vs. Electronic-1st	Incremental Charge - Manual Svc Order vs. Electronic-Add'l	Incremental Charge - Manual Svc Order vs. Electronic-Disc 1st	Incremental Charge - Manual Svc Order vs. Electronic-Disc Add'l
							Rec	Nonrecurring		Nonrecurring Disconnect		OSS Rates($)					
								First	Add'l	First	Add'l	SOMEC	SOMAN	SOMAN	SOMAN	SOMAN	SOMAN
PHYSICAL COLLOCATION																	
		Physical Collocation - Co-Carrier Cross Connects/Direct Connect - Fiber Cable Support Structure, per linear ft.			CLO	PE1ES	0.0013										
		Physical Collocation - Co-Carrier Cross Connect/Direct Connect - Copper/Coax Cable Support Structure, per lin. ft.			CLO	PE1DS	0.0019										
		Physical Collocation - Co-Carrier Cross Connect/Direct Connect - Fiber Cable Support Structure, per cable	I		CLO	PE1DU		555.03									
		Physical Collocation - Co-Carrier Cross Connect/Direct Connect - Copper/Coax Cable Support Structure, per cable	I		CLO	PE1DV		555.03									

UNBUNDLED NETWORK ELEMENTS - Tennessee														Attachment: !		Table: 1	
CATEGORY		RATE ELEMENTS	Interim	Zone	BCS	USOC	RATES ($)					Svc Order Submitted Elec per LSR	Svc Order Submitted Manually per LSR	Incremental Charge - Manual Svc Order vs. Electronic-1st	Incremental Charge - Manual Svc Order vs. Electronic-Add'l	Incremental Charge - Manual Svc Order vs. Electronic-Disc 1st	Incremental Charge - Manual Svc Order vs. Electronic-Disc Add'l
							Rec	Nonrecurring		Nonrecurring Disconnect		OSS Rates ($)					
								First	Add'l	First	Add'l	SOMEC	SOMAN	SOMAN	SOMAN	SOMAN	SOMAN
UNBUNDLED PORT/LOOP COMBINATIONS - COST BASED RATES																	
	2-WIRE VOICE GRADE LOOP WITH 2-WIRE LINE PORT (RES)																
	OFF/ON PREMISES EXTENSION CHANNELS																
		2 Wire Analog Voice Grade Extension Loop – Non-Design		1	UEPRX	UEAEN	13.19	31.99	20.02	10.65	1.41			20.35	10.54	13.32	13.32
		2 Wire Analog Voice Grade Extension Loop – Non-Design		2	UEPRX	UEAEN	17.23	31.99	20.02	10.65	1.41			20.35	10.54	13.32	13.32
		2 Wire Analog Voice Grade Extension Loop – Non-Design		3	UEPRX	UEAEN	22.53	31.99	20.02	10.65	1.41			20.35	10.54	13.32	13.32
		2 Wire Analog Voice Grade Extension Loop – Design		1	UEPRX	UEAED	16.56	75.06	48.20	28.70	17.64			20.35	10.54	13.32	13.32
		2 Wire Analog Voice Grade Extension Loop – Design		2	UEPRX	UEAED	21.63	75.06	48.20	28.70	17.64			20.35	10.54	13.32	13.32
		2 Wire Analog Voice Grade Extension Loop – Design		3	UEPRX	UEAED	28.28	75.06	48.20	28.70	17.64			20.35	10.54	13.32	13.32
	INTEROFFICE TRANSPORT																
		Interoffice Transport - Dedicated - 2 Wire Voice Grade - Facility Termination			UEPRX	U1TV2	18.58	55.39	17.37	27.96	3.51						
		Interoffice Transport - Dedicated - 2 Wire Voice Grade - Per Mile or Fraction Mile			UEPRX	U1TVM	0.02	0.00	0.00								
	2-WIRE VOICE GRADE LOOP WITH 2-WIRE LINE PORT (BUS)																
	OFF/ON PREMISES EXTENSION CHANNELS																
		2 Wire Analog Voice Grade Extension Loop – Non-Design		1	UEPBX	UEAEN	13.19	31.99	20.02	10.65	1.41			20.35	10.54	13.32	13.32
		2 Wire Analog Voice Grade Extension Loop – Non-Design		2	UEPBX	UEAEN	17.23	31.99	20.02	10.65	1.41			20.35	10.54	13.32	13.32
		2 Wire Analog Voice Grade Extension Loop – Non-Design		3	UEPBX	UEAEN	22.53	31.99	20.02	10.65	1.41			20.35	10.54	13.32	13.32
		2 Wire Analog Voice Grade Extension Loop – Design		1	UEPBX	UEAED	16.56	75.06	48.20	28.70	17.64			20.35	10.54	13.32	13.32
		2 Wire Analog Voice Grade Extension Loop – Design		2	UEPBX	UEAED	21.63	75.06	48.20	28.70	17.64			20.35	10.54	13.32	13.32
		2 Wire Analog Voice Grade Extension Loop – Design		3	UEPBX	UEAED	28.28	75.06	48.20	28.70	17.64			20.35	10.54	13.32	13.32
	INTEROFFICE TRANSPORT																
		Interoffice Transport - Dedicated - 2 Wire Voice Grade - Facility Termination			UEPBX	U1TV2	18.58	55.39	17.37	27.96	3.51						
		Interoffice Transport - Dedicated - 2 Wire Voice Grade - Per Mile or Fraction Mile			UEPBX	U1TVM	0.01	0.00	0.00								
	2-WIRE VOICE GRADE LOOP WITH 2-WIRE LINE PORT (RES - PBX)																
	OFF/ON PREMISES EXTENSION CHANNELS																
		Local Channel Voice grade, per termination		1	UEPRG	P2JHX	16.56	75.06	48.20	28.70	17.64			20.35	10.54	13.32	13.32
		Local Channel Voice grade, per termination		2	UEPRG	P2JHX	21.63	75.06	48.20	28.70	17.64			20.35	10.54	13.32	13.32
		Local Channel Voice grade, per termination		3	UEPRG	P2JHX	28.28	75.06	48.20	28.70	17.64			20.35	10.54	13.32	13.32
	INTEROFFICE TRANSPORT																
		Interoffice Transport - Dedicated - 2 Wire Voice Grade - Facility Termination			UEPRG	U1TV2	18.58	55.39	17.37	27.96	3.51						
		Interoffice Transport - Dedicated - 2 Wire Voice Grade - Per Mile or Fraction Mile			UEPRG	U1TVM	0.01	0.00	0.00								
	2-WIRE VOICE GRADE LOOP WITH 2-WIRE LINE PORT (BUS - PBX)																
	OFF/ON PREMISES EXTENSION CHANNELS																
		Local Channel Voice grade, per termination		1	UEPPX	P2JHX	16.56	75.06	48.20	28.70	17.64			20.35	10.54	13.32	13.32
		Local Channel Voice grade, per termination		2	UEPPX	P2JHX	21.63	75.06	48.20	28.70	17.64			20.35	10.54	13.32	13.32
		Local Channel Voice grade, per termination		3	UEPPX	P2JHX	28.28	75.06	48.20	28.70	17.64			20.35	10.54	13.32	13.32
	INTEROFFICE TRANSPORT																
		Interoffice Transport - Dedicated - 2 Wire Voice Grade - Facility Termination			UEPPX	U1TV2	18.58	55.39	17.37	27.96	3.51						

UNBUNDLED NETWORK ELEMENTS - Tennessee														Attachment: !		Table: 1	
CATEGORY		RATE ELEMENTS	Interim	Zone	BCS	USOC	RATES ($)					Svc Order Submitted Elec per LSR	Svc Order Submitted Manually per LSR	Incremental Charge - Manual Svc Order vs. Electronic-1st	Incremental Charge - Manual Svc Order vs. Electronic-Add'l	Incremental Charge - Manual Svc Order vs. Electronic-Disc 1st	Incremental Charge - Manual Svc Order vs. Electronic-Disc Add'l
							Rec	Nonrecurring		Nonrecurring Disconnect		OSS Rates ($)					
								First	Add'l	First	Add'l	SOMEC	SOMAN	SOMAN	SOMAN	SOMAN	SOMAN
		Interoffice Transport - Dedicated - 2 Wire Voice Grade - Per Mile or Fraction Mile			UEPPX	U1TVM	0.01	0.00	0.00								
UNBUNDLED PORT/LOOP COMBINATIONS - MARKET RATES																	
	2-WIRE VOICE GRADE LOOP WITH 2-WIRE LINE PORT (RES)																
	OFF/ON PREMISES EXTENSION CHANNELS																
		2 Wire Analog Voice Grade Extension Loop – Non-Design		1	UEPRX	UEAEN	13.19	31.99	20.02	10.65	1.41			20.35	10.54	13.32	13.32
		2 Wire Analog Voice Grade Extension Loop – Non-Design		2	UEPRX	UEAEN	17.23	31.99	20.02	10.65	1.41			20.35	10.54	13.32	13.32
		2 Wire Analog Voice Grade Extension Loop – Non-Design		3	UEPRX	UEAEN	22.53	31.99	20.02	10.65	1.41			20.35	10.54	13.32	13.32
		2 Wire Analog Voice Grade Extension Loop – Design		1	UEPRX	UEAED	16.56	75.06	48.20	28.70	17.64			20.35	10.54	13.32	13.32
		2 Wire Analog Voice Grade Extension Loop – Design		2	UEPRX	UEAED	21.63	75.06	48.20	28.70	17.64			20.35	10.54	13.32	13.32
		2 Wire Analog Voice Grade Extension Loop – Design		3	UEPRX	UEAED	28.28	75.06	48.20	28.70	17.64			20.35	10.54	13.32	13.32
	INTEROFFICE TRANSPORT																
		Interoffice Transport - Dedicated - 2 Wire Voice Grade - Facility Termination			UEPRX	U1TV2	$18.58	$55.39	$17.37	$27.96	$3.51						
		Interoffice Transport - Dedicated - 2 Wire Voice Grade - Per Mile or Fraction Mile			UEPRX	U1TVM	$0.02	$0.00	$0.00								
	2-WIRE VOICE GRADE LOOP WITH 2-WIRE LINE PORT (BUS)																
	OFF/ON PREMISES EXTENSION CHANNELS																
		2 Wire Analog Voice Grade Extension Loop – Non-Design		1	UEPBX	UEAEN	$13.19	$31.99	$20.02	$10.65	$1.41			$20.35	$10.54	13.32	13.32
		2 Wire Analog Voice Grade Extension Loop – Non-Design		2	UEPBX	UEAEN	$17.23	$31.99	$20.02	$10.65	$1.41			$20.35	$10.54	13.32	13.32
		2 Wire Analog Voice Grade Extension Loop – Non-Design		3	UEPBX	UEAEN	$22.53	$31.99	$20.02	$10.65	$1.41			$20.35	$10.54	13.32	13.32
		2 Wire Analog Voice Grade Extension Loop – Design		1	UEPBX	UEAED	$16.56	$75.06	$48.20	$28.70	$17.64			$20.35	$10.54	13.32	13.32
		2 Wire Analog Voice Grade Extension Loop – Design		2	UEPBX	UEAED	$21.63	$75.06	$48.20	$28.70	$17.64			$20.35	$10.54	13.32	13.32
		2 Wire Analog Voice Grade Extension Loop – Design		3	UEPBX	UEAED	$28.28	$75.06	$48.20	$28.70	$17.64			$20.35	$10.54	13.32	13.32
	INTEROFFICE TRANSPORT																
		Interoffice Transport - Dedicated - 2 Wire Voice Grade - Facility Termination			UEPBX	U1TV2	18.58	55.39	17.37	27.96	3.51						
		Interoffice Transport - Dedicated - 2 Wire Voice Grade - Per Mile or Fraction Mile			UEPBX	U1TVM	0.01	0	0								
	2-WIRE VOICE GRADE LOOP WITH 2-WIRE LINE PORT (RES - PBX)																
	OFF/ON PREMISES EXTENSION CHANNELS																
		Local Channel Voice grade, per termination		1	UEPRG	P2JHX	16.56	75.06	48.2	28.7	17.64			20.35	10.54	13.32	13.32
		Local Channel Voice grade, per termination		2	UEPRG	P2JHX	21.63	75.06	48.2	28.7	17.64			20.35	10.54	13.32	13.32
		Local Channel Voice grade, per termination		3	UEPRG	P2JHX	28.28	75.06	48.2	28.7	17.64			20.35	10.54	13.32	13.32
	INTEROFFICE TRANSPORT																
		Interoffice Transport - Dedicated - 2 Wire Voice Grade - Facility Termination			UEPRG	U1TV2	18.58	55.39	17.37	27.96	3.51						
		Interoffice Transport - Dedicated - 2 Wire Voice Grade - Per Mile or Fraction Mile			UEPRG	U1TVM	0.01	0	0								
	2-WIRE VOICE GRADE LOOP WITH 2-WIRE LINE PORT (BUS - PBX)																
	OFF/ON PREMISES EXTENSION CHANNELS																
		Local Channel Voice grade, per termination		1	UEPPX	P2JHX	16.56	75.06	48.2	28.7	17.64			20.35	10.54	13.32	13.32
		Local Channel Voice grade, per termination		2	UEPPX	P2JHX	21.63	75.06	48.2	28.7	17.64			20.35	10.54	13.32	13.32
		Local Channel Voice grade, per termination		3	UEPPX	P2JHX	28.28	75.06	48.2	28.7	17.64			20.35	10.54	13.32	13.32
	INTEROFFICE TRANSPORT																
		Interoffice Transport - Dedicated - 2 Wire Voice Grade - Facility Termination			UEPPX	U1TV2	18.58	55.39	17.37	27.96	3.51						

UNBUNDLED NETWORK ELEMENTS - Tennessee														Attachment: !		Table: 1	
CATEGORY		RATE ELEMENTS	Interim	Zone	BCS	USOC	RATES ($)					Svc Order Submitted Elec per LSR	Svc Order Submitted Manually per LSR	Incremental Charge - Manual Svc Order vs. Electronic-1st	Incremental Charge - Manual Svc Order vs. Electronic-Add'l	Incremental Charge - Manual Svc Order vs. Electronic-Disc 1st	Incremental Charge - Manual Svc Order vs. Electronic-Disc Add'l
							Rec	Nonrecurring		Nonrecurring Disconnect		OSS Rates ($)					
								First	Add'l	First	Add'l	SOMEC	SOMAN	SOMAN	SOMAN	SOMAN	SOMAN
		Interoffice Transport - Dedicated - 2 Wire Voice Grade - Per Mile or Fraction Mile			UEPPX	U1TVM	0.01	0	0								

Amendment to the Agreement
Between
MCI WorldCom Communications, Inc.
and
BellSouth Telecommunications, Inc.
Dated June 17, 2002

Pursuant to this Amendment, (the "Amendment"), MCI WorldCom Communications, Inc. ("MCIm"), and BellSouth Telecommunications, Inc. ("BellSouth"), hereinafter referred to collectively as the "Parties," hereby agree to amend that certain Interconnection Agreement between the Parties dated June 17, 2002 ("Agreement") to be effective thirty (30) days after the date of the last signature executing the Amendment.

WHEREAS, BellSouth and MCIm entered into the Agreement on June 17, 2002, and;

WHEREAS, both Parties agree that an initial New Installation of a 2-Wire Port/Loop Combination- Residence line provisioned at a Location where QuickServe is available on the line shall incur a QuickServe Non-Recurring Charge (NRC) at the NRC Currently Combined Conversion Rate set forth in the Agreement and that any initial New Installation of a 2-Wire Port/Loop Combination - Residence line provisioned at a location where QuickServe is not available, shall incur the Not Currently Combined NRC, First and Additional rates set forth in the Agreement;

NOW THEREFORE, in consideration of the mutual provisions contained herein and other good and valuable consideration, the receipt and sufficiency of which are hereby acknowledged, the Parties hereby covenant and agree as follows:

1. The Parties agree to incorporate into Attachment 1 of the Agreement the rates and USOCs as set forth in Exhibit 1 of this Amendment attached hereto and incorporated herein by this reference.

2. The Parties agree to replace the Notices contacts for MCI WorldCom Communications, Inc. with the following:

   Chief Network Counsel
   Attn: Robert A. Peterson
   1133 19th Street NW
   Washington, DC 20036
   Fax: (202) 736-6903

   Director National Carrier Contracts and Initiatives
   Attn: Peter H. Reynolds
   22001 Loudoun County Parkway
   Suite G2-3-614
   Ashburn, VA 20147
   Fax: (703) 886-0118

   Copy to:
   Senior Manager, Carrier Agreements
   205 N. Michigan Avenue, 11th Floor

Chicago, IL 60601
Fax: (312) 470-5575

3. All of the other provisions of the Agreement, dated June 17, 2002, shall remain in full force and effect.

4. Either or both of the Parties are authorized to submit this Amendment to the respective state regulatory authorities for approval subject to Section 252(e) of the Federal Telecommunications Act of 1996.

IN WITNESS WHEREOF, the Parties have executed this Amendment the day and year written below.

BellSouth Telecommunications, Inc.

By: Kristen E Rowe

Name: Kristen Rowe

Title: Director

Date: 12/21/04

MCI WorldCom Communications, Inc.

By: Michael A. Beach

Name: Michael A. Beach

Title: Vice President

Date: 12/14/04

Version: QuickServe Amendment – Standard ICA
09/29/04

UNBUNDLED NETWORK ELEMENTS - Tennessee														Attachment: 1		Table: 1	
CATEGORY		RATE ELEMENTS	Interim	Zone	BCS	USOC	RATES ($)					Svc Order Submitted Elec per LSR	Svc Order Submitted Manually per LSR	Incremental Charge - Manual Svc Order vs. Electronic-1st	Incremental Charge - Manual Svc Order vs. Electronic-Add'l	Incremental Charge - Manual Svc Order vs. Electronic-Disc 1st	Incremental Charge - Manual Svc Order vs. Electronic-Disc Add'l
							Rec	Nonrecurring		Nonrecurring Disconnect		OSS Rates ($)					
								First	Add'l	First	Add'l	SOMEC	SOMAN	SOMAN	SOMAN	SOMAN	SOMAN
UNBUNDLED PORT/LOOP COMBINATIONS - COST BASED RATES																	
	NONRECURRING CHARGES (NRCs) - CURRENTLY COMBINED																
		2-Wire Voice Grade Loop / Line Port Platform - Installation Charge at QuickService location - Not Conversion of Existing Service			UEPRX	URECC		1.03					15.69				

UNBUNDLED NETWORK ELEMENTS - Tennessee															Attachment: 1		Table: 1	
CATEGORY		RATE ELEMENTS	Interim	Zone	BCS	USOC	RATES ($)					Svc Order Submitted Elec per LSR	Svc Order Submitted Manually per LSR	Incremental Charge - Manual Svc Order vs. Electronic-1st	Incremental Charge - Manual Svc Order vs. Electronic-Add'l	Incremental Charge - Manual Svc Order vs. Electronic-Disc 1st	Incremental Charge - Manual Svc Order vs. Electronic-Disc Add'l
							Rec	Nonrecurring		Nonrecurring Disconnect		OSS Rates ($)					
								First	Add'l	First	Add'l	SOMEC	SOMAN	SOMAN	SOMAN	SOMAN	SOMAN
UNBUNDLED PORT/LOOP COMBINATIONS - MARKET RATES																	
	NONRECURRING CHARGES (NRCs) - CURRENTLY COMBINED																
		2-Wire Voice Grade Loop / Line Port Platform - Installation Charge at QuickService location - Not Conversion of Existing Service			UEPRX	URECC		41.50					15.69				