BELLSOUTH® / CLEC Agreement

Customer Name: Tennessee Telephone Service, LLC dba Freedom Communications USA,

Tennessee Telephone Service, LLC dba Freedom Communications USA, LLC	2
Adoption_Papers	3
Signature Page	9
Exhibit 1 - Cover Page	10
Exhibit 2 - Att 1, Table 1 - Network Element Rates	11
Exhibit 2 - Att 1, Table 1 - Local Interconnection Rates	52
Exhibit 3 - Att 3 - Network Elements	53
Exhibit 4 - Att 4 - Local Interconnection	120
Exhibit 5 - Att 10 - Performance Measurement Introduction	153
Exhibit 5 - Att 10 - Performance Measurements	155

Note: This page is not part of the actual signed contract/amendment, but is present for record keeping purposes only.

By and Between

BellSouth Telecommunications, Inc.

And

Tennessee Telephone Service, LLC dba Freedom Communications USA,

AGREEMENT

This Agreement, which shall become effective thirty (30) days following the date of the last signature of both Parties ("Effective Date"), is entered into by and between Tennessee Telephone Service, LLC d/b/a Freedom Communications USA, LLC ("Freedom Communications USA") a Limited Liability Corporation on behalf of itself, and BellSouth Telecommunications, Inc., ("BellSouth"), a Georgia corporation, having an office at 675 W. Peachtree Street, Atlanta, Georgia, 30375, on behalf of itself and its successors and assigns.

WHEREAS, the Telecommunications Act of 1996 (the "Act") was signed into law on February 8, 1996; and

WHEREAS, section 252(i) of the Act requires BellSouth to make available any interconnection, service, or network element provided under an agreement approved by the appropriate state regulatory body to any other requesting telecommunications carrier upon the same terms and conditions as those provided in the agreement in its entirety; and

WHEREAS, Freedom Communications USA has requested that BellSouth make available the interconnection agreement in its entirety executed between BellSouth and MCI WorldCom Communications, Inc. ("MCIm") dated June 17, 2002 for the state of Tennessee.

NOW, THEREFORE, in consideration of the promises and mutual covenants of this Agreement, Freedom Communications USA and BellSouth hereby agree as follows:

1. Freedom Communications USA and BellSouth shall adopt in its entirety, except for those items identified in Paragraphs 2 – 17 following, the MCIm Interconnection Agreement dated June 17, 2002 and any and all amendments to said agreement executed and approved by the appropriate state regulatory commission as of the date of the execution of this Agreement. The MCIm Interconnection Agreement and all amendments are attached hereto as Exhibit 1 and incorporated herein by this reference. The adoption of this agreement with amendment(s) consists of the following:

ITEM	NO. PAGES
Title Pages	2
Adoption Papers	7
Exhibit 1 Cover Sheet	1
Exhibit 1 - MCI WorldCom Communications, Inc. Agreement	717
Exhibit 1 – Amendment 9/16/02	4
Exhibit 1 - Amendment 9/27/02	2
Exhibit 1 - Amendment 4/6/03	3
Exhibit 1 - Amendment 9/1/03	5
Exhibit 1 - Amendment 11/18/03	3
Exhibit 2 - Attachment 1, Table 1	42
Exhibit 3	67
Exhibit 4	33
Exhibit 5	214
TOTAL	1100

2. The Parties hereby agree to delete Sections 3.2 and 3.3 of General Terms and Conditions and replace with Sections 3.2 and 3.3 as follows:

3.2 The Parties agree that by no earlier than two hundred seventy (270) days and no later than one hundred and eight (180) days prior to the expiration of this Agreement, they shall commence negotiations for a new agreement to be effective beginning on the expiration date of this Agreement ("subsequent Agreement"). If, within one hundred and thirty-five (135) days of commencing the negotiation referred to above, the Parties are unable to negotiate new terms, conditions and prices for a Subsequent Agreement, either Party may petition the Commission to establish appropriate terms, conditions and prices for the Subsequent Agreement pursuant to 47 U.S.C. 252.

3.3 If, as of the expiration of this Agreement, a Subsequent Agreement has not been executed by the Parties, this Agreement shall terminate. Upon termination of this Agreement, BellSouth shall continue to offer services to Freedom Communications USA pursuant to the terms, conditions and rates set forth in BellSouth's then current standard interconnection agreement. In the event that BellSouth's standard interconnection agreement becomes effective as between the Parties, the Parties may continue to negotiate a Subsequent Agreement or arbitrate disputed issues to reach a Subsequent Agreement as set forth in Section 3.2 above, and the terms of such Subsequent Agreement shall be effective as of the effective date as stated in the Subsequent Agreement.

3. The Parties hereby agree to delete Section 21 of General Terms and Conditions in their entirety.

4. The Parties agree to delete Sections 60, 111, 123, 128 and 129 of Part B of the General Terms and Conditions and in lieu thereof shall substitute the following:

60. Left Blank Intentionally

111. "NETWORK ELEMENT PLATFORM" OFR "UNE-P" means the Combination of a Loop, NID, Local Switching, Shared Transport, databases and signaling (e.g. LIDB) and the vertical features resident in BellSouth's Central Office switch without separately ordering each element or disconnecting and reconnecting any aspect of a Customer's service.

123. Left Blank Intentionally

128. Left Blank Intentionally

129. Left Blank Intentionally

5. The Parties agree to delete Section 1.5 of Attachment 1.

6. The Parties hereby agree to delete Attachment 1, Table 1 Rates for Network Elements and Local Interconnection in their entirety and replace with rates as set forth in Exhibit 2, attached hereto and incorporated herein by this reference.

7. Attachment 2, Section 1.4 of the Agreement is hereby deleted in its entirety and replaced with new Attachment 2, Section 1.4, as follows:

1.4 Notwithstanding the foregoing, BellSouth may provide Freedom Communications USA notice via Internet posting of price changes and changes to the terms and conditions of services available for resale per Commission Orders. BellSouth will also post changes to business processes and polices, notices of new service offerings, and changes to service offerings not requiring an amendment to this Agreement, notices required to be posted to BellSouth's website, and any other information of general applicability to CLECs.

8. The Parties agree to delete Attachment 3, Network Elements, in its entirety and replace with Attachment 3 reflected as Exhibit 3, attached hereto and incorporated herein by this reference.

9. Attachment 4, Interconnection is deleted in its entirety and replaced with Attachment 4, Local Interconnection as set forth in Exhibit 4, attached hereto and incorporated herein by this reference.

10. Attachment 6 is deleted in its entirety and replaced with the following:

"**Rights-of-Way, Conduits and Pole Attachments**

BellSouth will provide nondiscriminatory access to any pole, duct, conduit, or right-of-way owned or controlled by BellSouth pursuant to 47 U.S.C. § 224, as amended by the Act, pursuant to terms and conditions of a license agreement subsequently negotiated with BellSouth's Competitive Structure Provisioning Center."

11. Section 1.7.4 of Attachment 8 of the Agreement is hereby deleted in its entirety and replaced with a new Section 1.7.4, incorporated herein by reference, as follows:

1.7.4 Deposit Policy. Freedom Communications shall complete the BellSouth Credit Profile and provide information to BellSouth regarding credit worthiness. Based on the results of the credit analysis, BellSouth reserves the right to secure the account with a suitable form of security deposit. Such security deposit shall take the form of cash, an Irrevocable Letter of Credit (BellSouth form), Surety Bond (BellSouth form) or, in BellSouth's sole discretion, some other form of security proposed by Freedom Communications. Any such security deposit shall in no way release Freedom Communications from its obligation to make complete and timely payments of its bill. Freedom Communications shall pay any applicable deposits prior to the inauguration of service. If, in the sole opinion of BellSouth, circumstances so warrant and/or gross monthly billing has increased beyond the level initially used to determine the level of security deposit, BellSouth reserves the right to request additional security and/or file a Uniform Commercial Code (UCC-1) security interest in Freedom Communications's "accounts receivables and proceeds." Interest on a security deposit, if provided in cash, shall accrue and be paid in accordance with the terms in the appropriate BellSouth tariff. Security deposits collected under this Section shall not exceed two months' estimated billing. In the event Freedom Communications fails to remit to BellSouth any deposit requested pursuant to this Section, service to Freedom Communications may be terminated in accordance with the terms of Section 1.7 of this Attachment, and any security deposits will be applied to Freedom Communications's account(s). In the event Freedom Communications defaults on its account, service to Freedom Communications will be terminated in accordance with the terms of Section 1.7 above, and any security deposits will be applied to Freedom Communications's account.

12. The Parties shall delete Sections 2 and 3 of Attachment 9 of the Interconnection Agreement and in lieu thereof shall substitute the following:

    2. Left Blank Intentionally

    3. Left Blank Intentionally

13. The Parties shall delete Attachment 10, Performance Measurements, in its entirety and replace with Attachment 10 as Exhibit 5, attached hereto and incorporated herein by this reference.

14. In the event that Freedom Communications USA consists of two (2) or more separate entities as set forth in the preamble to this Agreement, all such entities shall be jointly and severally liable for the obligations of Freedom Communications USA under this Agreement.

15. The term of this Agreement shall be from the effective date as set forth above and shall expire as set forth in Section 3 of the MCIm Interconnection Agreement for Tennessee. For the purposes of determining the expiration date of this Agreement pursuant to the 1st paragraph of the General Terms and Conditions of the MCIm Interconnection Agreement for Tennessee, the effective date shall be June 17, 2002.

16. Freedom Communications USA shall accept and incorporate any amendments to the MCIm Interconnection Agreement executed as a result of any effective judicial, regulatory, or legislative action in accordance with Section 2.3 of the General Terms and Conditions of the MCIm Interconnection Agreement.

17. Every notice, consent, approval, or other communications required or contemplated by this Agreement shall be in writing and shall be delivered in person or given by postage prepaid mail, address to:

    BellSouth Telecommunications, Inc.

    BellSouth Local Contract Manager
    8th Floor
    600 North 19th Street
    Birmingham, Alabama 35203

    and

ICS Attorney
Suite 4300
675 W. Peachtree St.
Atlanta, GA 30375

and

Tennessee Telephone Service, LLC d/b/a Freedom Communications USA, LLC

Matt Davis
201 Skyline Drive
Dickson, TN 37055
(615) 446-2010

or at such other address as the intended recipient previously shall have designated by written notice to the other Party. Where specifically required, notices shall be by certified or registered mail. Unless otherwise provided in this Agreement, notice by mail shall be effective on the date it is officially recorded as delivered by return receipt or equivalent, and in the absence of such record of delivery, it shall be presumed to have been delivered the fifth day, or next business day after the fifth day, after it was deposited in the mails.

IN WITNESS WHEREOF, the Parties have executed this Agreement through their authorized representatives.

BellSouth Telecommunications, Inc.	Tennessee Telephone Service, LLC dba Freedom Communications USA,
By:	By:
Name: Kristen E. Rowe	Name: MATTHEW T. DAVIS
Title: Director	Title: CEO
Date: 5/24/04	Date: 5/18/04

CCCS 9 of 367

EXHIBIT 1

MCI WorldCom Communications, Inc.
Interconnection Agreement
June 17, 2002

UNBUNDLED NETWORK ELEMENTS - Tennessee														Attachment: 1		Table 1	
CATEGORY		RATE ELEMENTS	Interim	Zone	BCS	USOC	RATES ($)					Svc Order Submitted Elec per LSR	Svc Order Submitted Manually per LSR	Incremental Charge - Manual Svc Order vs. Electronic-1st	Incremental Charge - Manual Svc Order vs. Electronic-Add'l	Incremental Charge - Manual Svc Order vs. Electronic-Disc 1st	Incremental Charge - Manual Svc Order vs. Electronic-Disc Add'l
							Rec	Nonrecurring		Nonrecurring Disconnect		OSS Rates ($)					
								First	Add'l	First	Add'l	SOMEC	SOMAN	SOMAN	SOMAN	SOMAN	SOMAN
	The "Zone" shown in the sections for stand-alone loops or loops as part of a combination refers to Geographically Deaveraged UNE Zones. To view Geographically Deaveraged UNE Zone Designations by Central Office, refer to internet Website: http://www.interconnection.bellsouth.com/become_a_clec/html/interconnection.htm																
OPERATIONAL SUPPORT SYSTEMS (OSS) - "REGIONAL RATES"																	
	NOTE: (1) CLEC should contact its contract negotiator if it prefers the "state specific" OSS charges as ordered by the State Commissions. The OSS charges currently contained in this rate exhibit are the BellSouth "regional" service ordering charges. CLEC may elect either the state specific Commission ordered rates for the service ordering charges, or CLEC may elect the regional service ordering charge, however, CLEC can not obtain a mixture of the two regardless if CLEC has a interconnection contract established in each of the 9 states.																
	NOTE: (2) Any element that can be ordered electronically will be billed according to the SOMEC rate listed in this category. Please refer to BellSouth's Local Ordering Handbook (LOH) to determine if a product can be ordered electronically. For those elements that cannot be ordered electronically at present per the LOH, the listed SOMEC rate in this category reflects the charge that would be billed to a CLEC once electronic ordering capabilities come on-line for that element. Otherwise, the manual ordering charge, SOMAN, will be applied to a CLECs bill when it submits an LSR to BellSouth.																
	NOTE: (3) OSS - Manual Service Order Charge, Per Element - UNE Only **Please see applicable rate element for SOMAN charge**																
		OSS - Electronic Service Order Charge, Per Local Service Request (LSR) - UNE Only				SOMEC		0.00	0.00	0.00	0.00						
		OSS - Manual Service Order Charge, Per Element - UNE Only **Please see applicable rate element for OSS charge				SOMAN											
UNE SERVICE DATE ADVANCEMENT CHARGE																	
	NOTE: The Expedite charge will be maintained commensurate with BellSouth's FCC No.1 Tariff, Section 5 as applicable.																
		UNE Expedite Charge per Circuit or Line Assignable USOC, per Day			UAL, UEANL, UCL, UEF, UDF, UEQ, UDL, UENTW, UDN, UEA, UHL, ULC, USL, U1T12, U1T48, U1TD1, U1TD3, U1TDX, U1TO3, U1TS1, U1TVX, UC1BC, UC1BL, UC1CC, UC1CL, UC1DC, UC1DL, UC1EC, UC1EL, UC1FC, UC1FL, UC1GC, UC1GL, UC1HC, UC1HL, UDL12, UDL48, UDLO3, UDLSX, UE3, ULD12, ULD48, ULDD1, ULDD3, ULDDX, ULDO3, ULDS1, ULDVX, UNC1X, UNC3X, UNCDX, UNCNX, UNCSX, UNCVX, UNLD1, UNLD3, UXTD1, UXTD3, UXTS1, U1TUC, U1TUD, U1TUB, U1TUA	SDASP		200.00									
UNBUNDLED EXCHANGE ACCESS LOOP																	
	2-WIRE ANALOG VOICE GRADE LOOP																
		2-Wire Analog Voice Grade Loop - Service Level 1- Zone 1		1	UEANL	UEAL2	13.19	31.99	20.02	10.65	1.41			20.35	10.54	13.32	13.32
		2-Wire Analog Voice Grade Loop - Service Level 1- Zone 2		2	UEANL	UEAL2	17.23	31.99	20.02	10.65	1.41			20.35	10.54	13.32	13.32
		2-Wire Analog Voice Grade Loop - Service Level 1- Zone 3		3	UEANL	UEAL2	22.53	31.99	20.02	10.65	1.41			20.35	10.54	13.32	13.32
		2-Wire Analog Voice Grade Loop - Service Level 1- Zone 1		1	UEANL	UEASL	13.19	31.99	20.02	10.65	1.41			20.35	10.54	13.32	13.32
		2-Wire Analog Voice Grade Loop - Service Level 1- Zone 2		2	UEANL	UEASL	17.23	31.99	20.02	10.65	1.41			20.35	10.54	13.32	13.32
		2-Wire Analog Voice Grade Loop - Service Level 1- Zone 3		3	UEANL	UEASL	22.53	31.99	20.02	10.65	1.41			20.35	10.54	13.32	13.32
		Unbundled Miscellaneous Rate Element, Tag Loop at End User Premise			UEANL	URETL		8.33	0.83					20.35	10.54	13.32	13.32
		Loop Testing - Basic 1st Half Hour			UEANL	URET1		78.92	78.92					20.35	10.54	13.32	13.32
		Loop Testing - Basic Additional Half Hour			UEANL	URETA		23.33	23.33					20.35	10.54	13.32	13.32

UNBUNDLED NETWORK ELEMENTS - Tennessee														Attachment: 1		Table 1	
CATEGORY	RATE ELEMENTS	Interim	Zone	BCS	USOC	RATES ($)					Svc Order Submitted Elec per LSR	Svc Order Submitted Manually per LSR	Incremental Charge - Manual Svc Order vs. Electronic-1st	Incremental Charge - Manual Svc Order vs. Electronic-Add'l	Incremental Charge - Manual Svc Order vs. Electronic-Disc 1st	Incremental Charge - Manual Svc Order vs. Electronic-Disc Add'l
						Rec	Nonrecurring		Nonrecurring Disconnect		OSS Rates ($)					
							First	Add'l	First	Add'l	SOMEC	SOMAN	SOMAN	SOMAN	SOMAN	SOMAN
	CLEC to CLEC Conversion Charge Without Outside Dispatch (UVL-SL1)			UEANL	UREWO		15.80	8.95					20.35	10.54	13.32	13.32
	Unbundled Voice Loop, Non-Design Voice Loop, billing for BST providing make-up (Engineering Information - E.I.)			UEANL	UEANM		28.80	28.80								
	Manual Order Coordination for UVL-SL1s (per loop)			UEANL	UEAMC		36.52	36.52								
	Order Coordination for Specified Conversion Time for UVL-SL1 (per LSR)			UEANL	OCOSL		34.29	34.29								
2-WIRE Unbundled COPPER LOOP																
	2-Wire Unbundled Copper Loop - Non-Designed Zone 1		1	UEQ	UEQ2X	13.19	31.99	20.02	10.65	1.41			20.35	10.54	13.32	13.32
	2 Wire Unbundled Copper Loop - Non-Designed - Zone 2		2	UEQ	UEQ2X	17.23	31.99	20.02	10.65	1.41			20.35	10.54	13.32	13.32
	2 Wire Unbundled Copper Loop - Non-Designed - Zone 3		3	UEQ	UEQ2X	22.53	31.99	20.02	10.65	1.41			20.35	10.54	13.32	13.32
	Unbundled Miscellaneous Rate Element, Tag Loop at End User Premise			UEQ	URETL		8.33	0.83					20.35	10.54	13.32	13.32
	Manual Order Coordination 2 Wire Unbundled Copper Loop - Non-Designed (per loop)			UEQ	USBMC		36.52	36.52								
	Unbundled Copper Loop, Non-Design Copper Loop, billing for BST providing make-up (Engineering Information - E.I.)			UEQ	UEQMU		28.80	28.80					20.35	10.54	13.32	13.32
	Loop Testing - Basic 1st Half Hour			UEQ	URET1		78.92	78.92					20.35	10.54	13.32	13.32
	Loop Testing - Basic Additional Half Hour			UEQ	URETA		23.33	23.33					20.35	10.54	13.32	13.32
	CLEC to CLEC Conversion Charge Without Outside Dispatch (UCL-ND)			UEQ	UREWO		14.29	7.44					20.35	10.54	13.32	13.32
UNBUNDLED EXCHANGE ACCESS LOOP																
2-WIRE ANALOG VOICE GRADE LOOP																
	2 Wire Analog Voice Grade Loop-Service Level 1-Line Splitting-Zone 1		1	UEPSR UEPSB	UEALS	13.19	31.99	20.02	10.65	1.41			20.35	10.54	13.32	13.32
	2 Wire Analog Voice Grade Loop-Service Level 1-Line Splitting-Zone 1		1	UEPSR UEPSB	UEABS	13.19	31.99	20.02	10.65	1.41			20.35	10.54	13.32	13.32
	2 Wire Analog Voice Grade Loop- Service Level 1-Line Splitting-Zone 2		2	UEPSR UEPSB	UEALS	17.23	31.99	20.02	10.65	1.41			20.35	10.54	13.32	13.32
	2 Wire Analog Voice Grade Loop- Service Level 1-Line Splitting-Zone 2		2	UEPSR UEPSB	UEABS	17.23	31.99	20.02	10.65	1.41			20.35	10.54	13.32	13.32
	2 Wire Analog Voice Grade Loop-Service Level 1-Line Splitting-Zone 3		3	UEPSR UEPSB	UEALS	22.53	31.99	20.02	10.65	1.41			20.35	10.54	13.32	13.32
	2 Wire Analog Voice Grade Loop-Service Level 1-Line Splitting-Zone 3		3	UEPSR UEPSB	UEABS	22.53	31.99	20.02	10.65	1.41			20.35	10.54	13.32	13.32
UNBUNDLED EXCHANGE ACCESS LOOP																
2-WIRE ANALOG VOICE GRADE LOOP																
	2-Wire Analog Voice Grade Loop - Service Level 2 w/Loop or Ground Start Signaling - Zone 1		1	UEA	UEAL2	16.56	75.06	48.20	28.70	17.64			20.35	10.54	13.32	13.32
	2-Wire Analog Voice Grade Loop - Service Level 2 w/Loop or Ground Start Signaling - Zone 2		2	UEA	UEAL2	21.63	75.06	48.20	28.70	17.64			20.35	10.54	13.32	13.32
	2-Wire Analog Voice Grade Loop - Service Level 2 w/Loop or Ground Start Signaling - Zone 3		3	UEA	UEAL2	28.28	75.06	48.20	28.70	17.64			20.35	10.54	13.32	13.32
	Order Coordination for Specified Conversion Time (per LSR)			UEA	OCOSL		34.29									
	2-Wire Analog Voice Grade Loop - Service Level 2 w/Reverse Battery Signaling - Zone 1		1	UEA	UEAR2	16.56	75.06	48.20	28.70	17.64			20.35	10.54	13.32	13.32
	2-Wire Analog Voice Grade Loop - Service Level 2 w/Reverse Battery Signaling - Zone 2		2	UEA	UEAR2	21.63	75.06	48.20	28.70	17.64			20.35	10.54	13.32	13.32
	2-Wire Analog Voice Grade Loop - Service Level 2 w/Reverse Battery Signaling - Zone 3		3	UEA	UEAR2	28.28	75.06	48.20	28.70	17.64			20.35	10.54	13.32	13.32
	Order Coordination for Specified Conversion Time (per LSR)			UEA	OCOSL		34.29									
	CLEC to CLEC Conversion Charge without outside dispatch			UEA	UREWO		75.06	36.41					20.35	10.54	13.32	13.32
	Loop Tagging - Service Level 2 (SL2)			UEA	URETL		11.23	1.10					20.35	10.54	13.32	13.32
4-WIRE ANALOG VOICE GRADE LOOP																
	4-Wire Analog Voice Grade Loop - Zone 1		1	UEA	UEAL4	24.70	122.76	85.57	76.35	39.16			20.35	10.54	13.32	13.32
	4-Wire Analog Voice Grade Loop - Zone 2		2	UEA	UEAL4	32.25	122.76	85.57	76.35	39.16			20.35	10.54	13.32	13.32
	4-Wire Analog Voice Grade Loop - Zone 3		3	UEA	UEAL4	42.17	122.76	85.57	76.35	39.16			20.35	10.54	13.32	13.32
	Order Coordination for Specified Conversion Time (per LSR)			UEA	OCOSL		34.29									
	CLEC to CLEC Conversion Charge without outside dispatch			UEA	UREWO		75.06	36.41					20.35	10.54	13.32	13.32

UNBUNDLED NETWORK ELEMENTS - Tennessee														Attachment: 1		Table 1	
CATEGORY	RATE ELEMENTS	Interim	Zone	BCS	USOC	RATES ($)					Svc Order Submitted Elec per LSR	Svc Order Submitted Manually per LSR	Incremental Charge - Manual Svc Order vs. Electronic-1st	Incremental Charge - Manual Svc Order vs. Electronic-Add'l	Incremental Charge - Manual Svc Order vs. Electronic-Disc 1st	Incremental Charge - Manual Svc Order vs. Electronic-Disc Add'l
						Rec	Nonrecurring		Nonrecurring Disconnect		OSS Rates ($)					
							First	Add'l	First	Add'l	SOMEC	SOMAN	SOMAN	SOMAN	SOMAN	SOMAN
2-WIRE ISDN DIGITAL GRADE LOOP																
	2-Wire ISDN Digital Grade Loop - Zone 1		1	UDN	U1L2X	22.22	142.76	88.88	76.35	39.16			20.35	10.54	13.32	13.32
	2-Wire ISDN Digital Grade Loop - Zone 2		2	UDN	U1L2X	29.02	142.76	88.88	76.35	39.16			20.35	10.54	13.32	13.32
	2-Wire ISDN Digital Grade Loop - Zone 3		3	UDN	U1L2X	37.95	142.76	88.88	76.35	39.16			20.35	10.54	13.32	13.32
	Order Coordination For Specified Conversion Time (per LSR)			UDN	OCOSL		34.29									
	CLEC to CLEC Conversion Charge without outside dispatch			UDN	UREWO		91.77	44.22					20.35	10.54	13.32	13.32
2-WIRE ASYMMETRICAL DIGITAL SUBSCRIBER LINE (ADSL) COMPATIBLE LOOP																
	2 Wire Unbundled ADSL Loop including manual service inquiry & facility reservation - Zone 1		1	UAL	UAL2X	13.82	270.01	234.63	74.54	39.14			20.35	10.54	13.32	13.32
	2 Wire Unbundled ADSL Loop including manual service inquiry & facility reservation - Zone 2		2	UAL	UAL2X	18.05	270.01	234.63	74.54	39.14			20.35	10.54	13.32	13.32
	2 Wire Unbundled ADSL Loop including manual service inquiry & facility reservation - Zone 3		3	UAL	UAL2X	23.60	270.01	234.63	74.54	39.14			20.35	10.54	13.32	13.32
	Order Coordination for Specified Conversion Time (per LSR)			UAL	OCOSL		34.29									
	2 Wire Unbundled ADSL Loop without manual service inquiry & facility reservaton - Zone 1	I	1	UAL	UAL2W	13.82	31.99	20.02	10.65	1.41			20.35	10.54	13.32	13.32
	2 Wire Unbundled ADSL Loop without manual service inquiry & facility reservaton - Zone 2	I	2	UAL	UAL2W	18.05	31.99	20.02	10.65	1.41			20.35	10.54	13.32	13.32
	2 Wire Unbundled ADSL Loop without manual service inquiry & facility reservaton - Zone 3	I	3	UAL	UAL2W	23.60	31.99	20.02	10.65	1.41			20.35	10.54	13.32	13.32
	Order Coordination for Specified Conversion Time (per LSR)			UAL	OCOSL		34.29									
	CLEC to CLEC Conversion Charge without outside dispatch	I		UAL	UREWO		31.99	20.02					20.35	10.54	13.32	13.32
2-WIRE HIGH BIT RATE DIGITAL SUBSCRIBER LINE (HDSL) COMPATIBLE LOOP																
	2 Wire Unbundled HDSL Loop including manual service inquiry & facility reservation - Zone 1		1	UHL	UHL2X	10.83	270.01	234.63	74.54	39.14			20.35	10.54	13.32	13.32
	2 Wire Unbundled HDSL Loop including manual service inquiry & facility reservation - Zone 2		2	UHL	UHL2X	14.15	270.01	234.63	74.54	39.14			20.35	10.54	13.32	13.32
	2 Wire Unbundled HDSL Loop including manual service inquiry & facility reservation - Zone 3		3	UHL	UHL2X	18.50	270.01	234.63	74.54	39.14			20.35	10.54	13.32	13.32
	Order Coordination for Specified Conversion Time (per LSR)			UHL	OCOSL		34.29									
	2 Wire Unbundled HDSL Loop without manual service inquiry and facility reservation - Zone 1	I	1	UHL	UHL2W	10.83	31.99	20.02	10.65	1.41			20.35	10.54	13.32	13.32
	2 Wire Unbundled HDSL Loop without manual service inquiry and facility reservation - Zone 2	I	2	UHL	UHL2W	14.15	31.99	20.02	10.65	1.41			20.35	10.54	13.32	13.32
	2 Wire Unbundled HDSL Loop without manual service inquiry and facility reservation - Zone 3	I	3	UHL	UHL2W	18.50	31.99	20.02	10.65	1.41			20.35	10.54	13.32	13.32
	Order Coordination for Specified Conversion Time (per LSR)			UHL	OCOSL		34.29									
	CLEC to CLEC Conversion Charge without outside dispatch	I		UHL	UREWO		31.99	20.02					20.35	10.54	13.32	13.32
4-WIRE HIGH BIT RATE DIGITAL SUBSCRIBER LINE (HDSL) COMPATIBLE LOOP																
	4 Wire Unbundled HDSL Loop including manual service inquiry and facility reservation - Zone 1		1	UHL	UHL4X	13.93	279.60	244.22	74.54	39.14			20.35	10.54	13.32	13.32
	4-Wire Unbundled HDSL Loop including manual service inquiry and facility reservation - Zone 2		2	UHL	UHL4X	18.20	279.60	244.22	74.54	39.14			20.35	10.54	13.32	13.32
	4-Wire Unbundled HDSL Loop including manual service inquiry and facility reservation - Zone 3		3	UHL	UHL4X	23.80	279.60	244.22	74.54	39.14			20.35	10.54	13.32	13.32
	Order Coordination for Specified Conversion Time (per LSR)			UHL	OCOSL		34.29									
	4-Wire Unbundled HDSL Loop without manual service inquiry and facility reservation - Zone 1	I	1	UHL	UHL4W	13.93	31.99	20.02	10.65	1.41			20.35	10.54	13.32	13.32
	4-Wire Unbundled HDSL Loop without manual service inquiry and facility reservation - Zone 2	I	2	UHL	UHL4W	18.20	31.99	20.02	10.65	1.41			20.35	10.54	13.32	13.32
	4-Wire Unbundled HDSL Loop without manual service inquiry and facility reservation - Zone 3	I	3	UHL	UHL4W	23.80	31.99	20.02	10.65	1.41			20.35	10.54	13.32	13.32
	Order Coordination for Specified Conversion Time (per LSR)			UHL	OCOSL		34.29									
	CLEC to CLEC Conversion Charge without outside dispatch	I		UHL	UREWO		31.99	20.02					20.35	10.54	13.32	13.32
4-WIRE DS1 DIGITAL LOOP																
	4-Wire DS1 Digital Loop - Zone 1		1	USL	USLXX	57.73	313.08	219.72	96.86	40.45			18.98	8.43	11.95	11.95
	4-Wire DS1 Digital Loop - Zone 2		2	USL	USLXX	75.40	313.08	219.72	96.86	40.45			18.98	8.43	11.95	11.95
	4-Wire DS1 Digital Loop - Zone 3		3	USL	USLXX	98.59	313.08	219.72	96.86	40.45			18.98	8.43	11.95	11.95
	Order Coordination for Specified Conversion Time (per LSR)			USL	OCOSL		34.59									

UNBUNDLED NETWORK ELEMENTS - Tennessee														Attachment: 1		Table 1	
CATEGORY	RATE ELEMENTS	Interim	Zone	BCS	USOC	RATES ($)					Svc Order Submitted Elec per LSR	Svc Order Submitted Manually per LSR	Incremental Charge - Manual Svc Order vs. Electronic-1st	Incremental Charge - Manual Svc Order vs. Electronic-Add'l	Incremental Charge - Manual Svc Order vs. Electronic-Disc 1st	Incremental Charge - Manual Svc Order vs. Electronic-Disc Add'l
						Rec	Nonrecurring		Nonrecurring Disconnect				OSS Rates ($)			
							First	Add'l	First	Add'l	SOMEC	SOMAN	SOMAN	SOMAN	SOMAN	SOMAN
	CLEC to CLEC Conversion Charge without outside dispatch			USL	UREWO		130.47	40.11					20.35	10.54	13.32	13.32
4-WIRE 19.2, 56 OR 64 KBPS DIGITAL GRADE LOOP																
	4 Wire Unbundled Digital 19.2 Kbps		1	UDL	UDL19	31.10	207.01	141.38	90.70	44.18			20.35	10.54	13.32	13.32
	4 Wire Unbundled Digital 19.2 Kbps		2	UDL	UDL19	40.61	207.01	141.38	90.70	44.18			20.35	10.54	13.32	13.32
	4 Wire Unbundled Digital 19.2 Kbps		3	UDL	UDL19	53.11	207.01	141.38	90.70	44.18			20.35	10.54	13.32	13.32
	4 Wire Unbundled Digital Loop 56 Kbps - Zone 1		1	UDL	UDL56	31.10	207.01	141.38	90.70	44.18			20.35	10.54	13.32	13.32
	4 Wire Unbundled Digital Loop 56 Kbps - Zone 2		2	UDL	UDL56	40.61	207.01	141.38	90.70	44.18			20.35	10.54	13.32	13.32
	4 Wire Unbundled Digital Loop 56 Kbps - Zone 3		3	UDL	UDL56	53.11	207.01	141.38	90.70	44.18			20.35	10.54	13.32	13.32
	Order Coordination for Specified Conversion Time (per LSR)			UDL	OCOSL		34.29									
	4 Wire Unbundled Digital Loop 64 Kbps - Zone 1		1	UDL	UDL64	31.10	207.01	141.38	90.70	44.18			20.35	10.54	13.32	13.32
	4 Wire Unbundled Digital Loop 64 Kbps - Zone 2		2	UDL	UDL64	40.61	207.01	141.38	90.70	44.18			20.35	10.54	13.32	13.32
	4 Wire Unbundled Digital Loop 64 Kbps - Zone 3		3	UDL	UDL64	53.11	207.01	141.38	90.70	44.18			20.35	10.54	13.32	13.32
	Order Coordination for Specified Conversion Time (per LSR)			UDL	OCOSL		34.29									
	CLEC to CLEC Conversion Charge without outside dispatch			UDL	UREWO		102.28	49.82					20.35	10.54	13.32	13.32
2-WIRE Unbundled COPPER LOOP																
	2-Wire Unbundled Copper Loop-Designed including manual service inquiry & facility reservation - Zone 1	I	1	UCL	UCLPB	13.19	31.99	20.02	10.65	1.41			20.35	10.54	13.32	13.32
	2-Wire Unbundled Copper Loop-Designed including manual service inquiry & facility reservation - Zone 2	I	2	UCL	UCLPB	17.23	31.99	20.02	10.65	1.41			20.35	10.54	13.32	13.32
	2 Wire Unbundled Copper Loop-Designed including manual service inquiry & facility reservation - Zone 3	I	3	UCL	UCLPB	22.53	31.99	20.02	10.65	1.41			20.35	10.54	13.32	13.32
	Order Coordination for Unbundled Copper Loops (per loop)			UCL	UCLMC		36.52	36.52								
	2-Wire Unbundled Copper Loop-Designed without manual service inquiry and facility reservation - Zone 1	I	1	UCL	UCLPW	13.19	31.99	20.02	10.65	1.41			20.35	10.54	13.32	13.32
	2-Wire Unbundled Copper Loop-Designed without manual service inquiry and facility reservation - Zone 2	I	2	UCL	UCLPW	17.23	31.99	20.02	10.65	1.41			20.35	10.54	13.32	13.32
	2-Wire Unbundled Copper Loop-Designed without manual service inquiry and facility reservation - Zone 3	I	3	UCL	UCLPW	22.53	31.99	20.02	10.65	1.41			20.35	10.54	13.32	13.32
	Order Coordination for Unbundled Copper Loops (per loop)			UCL	UCLMC		36.52	36.52								
	CLEC to CLEC Conversion Charge without outside dispatch (UCL-Des)	I		UCL	UREWO		31.99	20.02					20.35	10.54	13.32	13.32
4-WIRE COPPER LOOP																
	4-Wire Copper Loop-Designed including manual service inquiry and facility reservation - Zone 1	I	1	UCL	UCL4S	24.70	122.76	85.57	76.35	39.16			20.35	10.54	13.32	13.32
	4-Wire Copper Loop-Designed including manual service inquiry and facility reservation - Zone 2	I	2	UCL	UCL4S	32.25	122.76	85.57	76.35	39.16			20.35	10.54	13.32	13.32
	4-Wire Copper Loop-Designed including manual service inquiry and facility reservation - Zone 3	I	3	UCL	UCL4S	42.17	122.76	85.57	76.35	39.16			20.35	10.54	13.32	13.32
	Order Coordination for Unbundled Copper Loops (per loop)			UCL	UCLMC		36.52	36.52								
	4-Wire Copper Loop-Designed without manual service inquiry and facility reservation - Zone 1	I	1	UCL	UCL4W	24.70	122.76	85.57	76.35	39.16			20.35	10.54	13.32	13.32
	4-Wire Copper Loop-Designed without manual service inquiry and facility reservation - Zone 2	I	2	UCL	UCL4W	32.25	122.76	85.57	76.35	39.16			20.35	10.54	13.32	13.32
	4-Wire Copper Loop-Designed without manual service inquiry and facility reservation - Zone 3	I	3	UCL	UCL4W	42.17	122.76	85.57	76.35	39.16			20.35	10.54	13.32	13.32
	Order Coordination for Unbundled Copper Loops (per loop)			UCL	UCLMC		36.52	36.52								
	CLEC to CLEC Conversion Charge without outside dispatch (UCL-Des)	I		UCL	UREWO		31.99	20.02					20.35	10.54	13.32	13.32
LOOP MODIFICATION																
	Unbundled Loop Modification, Removal of Load Coils - 2 Wire pair less than or equal to 18k ft, per Unbundled Loop			UAL, UHL, UCL, UEQ, ULS, UEA, UEANL, UEPSR, UEPSB	ULM2L		65.40	65.40					20.35	10.54	13.32	13.32
	Unbundled Loop Modification Removal of Load Coils - 4 Wire less than or equal to 18K ft, per Unbundled Loop			UHL, UCL, UEA	ULM4L		65.40	65.40					20.35	10.54	13.32	13.32
	Unbundled Loop Modification Removal of Bridged Tap Removal, per unbundled loop	I		UAL, UHL, UCL, UEQ, ULS, UEA, UEANL, UEPSR, UEPSB	ULMBT		65.44	65.44					20.35	10.54	13.32	13.32

UNBUNDLED NETWORK ELEMENTS - Tennessee														Attachment: 1		Table 1	
CATEGORY		RATE ELEMENTS	Interim	Zone	BCS	USOC	RATES ($)					Svc Order Submitted Elec per LSR	Svc Order Submitted Manually per LSR	Incremental Charge - Manual Svc Order vs. Electronic-1st	Incremental Charge - Manual Svc Order vs. Electronic-Add'l	Incremental Charge - Manual Svc Order vs. Electronic-Disc 1st	Incremental Charge - Manual Svc Order vs. Electronic-Disc Add'l
							Rec	Nonrecurring		Nonrecurring Disconnect		OSS Rates ($)					
								First	Add'l	First	Add'l	SOMEC	SOMAN	SOMAN	SOMAN	SOMAN	SOMAN
SUB-LOOPS																	
	Sub-Loop Distribution																
		Sub-Loop - Per Cross Box Location - CLEC Feeder Facility Set-Up	I		UEANL	USBSA		517.25	517.25					20.35	10.54	13.32	13.32
		Sub-Loop - Per Cross Box Location - Per 25 Pair Panel Set-Up	I		UEANL	USBSB		42.68	42.68					20.35	10.54	13.32	13.32
		Sub-Loop - Per Building Equipment Room - CLEC Feeder Facility Set-Up	I		UEANL	USBSC		313.01	313.01					20.35	10.54	13.32	13.32
		Sub-Loop - Per Building Equipment Room - Per 25 Pair Panel Set-Up	I		UEANL	USBSD		108.06	108.06					20.35	10.54	13.32	13.32
		Sub-Loop Distribution Per 2-Wire Analog Voice Grade Loop - Statewide		sw	UEANL	USBN2	10.02	148.84	112.34	73.14	36.65			20.35	10.54	13.32	13.32
		Order Coordination for Unbundled Sub-Loops, per sub-loop pair			UEANL	USBMC		34.29	34.29								
		Sub-Loop Distribution Per 4-Wire Analog Voice Grade Loop - Zone 1		1	UEANL	USBN4	7.30	147.93	75.11	99.96	16.98			20.35	10.54	13.32	13.32
		Sub-Loop Distribution Per 4-Wire Analog Voice Grade Loop - Zone 2		2	UEANL	USBN4	9.54	147.93	75.11	99.96	16.98			20.35	10.54	13.32	13.32
		Sub-Loop Distribution Per 4-Wire Analog Voice Grade Loop - Zone 3		3	UEANL	USBN4	12.47	147.93	75.11	99.96	16.98			20.35	10.54	13.32	13.32
		Order Coordination for Unbundled Sub-Loops, per sub-loop pair			UEANL	USBMC		34.29	34.29								
		Sub-Loop 2-Wire Intrabuilding Network Cable (INC)	I		UEANL	USBR2	1.35	94.56	29.35					20.35	10.54	13.32	13.32
		Order Coordination for Unbundled Sub-Loops, per sub-loop pair			UEANL	USBMC		34.29	34.29								
		Sub-Loop 4-Wire Intrabuilding Network Cable (INC)	I		UEANL	USBR4	2.26	116.14	37.10					20.35	10.54	13.32	13.32
		Order Coordination for Unbundled Sub-Loops, per sub-loop pair			UEANL	USBMC		34.29	34.29								
		Loop Testing - Basic 1st Half Hour			UEANL	URET1		78.92	78.92								
		Loop Testing - Basic Additional Half Hour			UEANL	URETA		23.33	23.33								
		2 Wire Copper Unbundled Sub-Loop Distribution - Zone 1	I	1	UEF	UCS2X	5.16	110.71	37.89	94.41	13.09			20.35	10.54	13.32	13.32
		2 Wire Copper Unbundled Sub-Loop Distribution - Zone 2	I	2	UEF	UCS2X	6.74	110.71	37.89	94.41	13.09			20.35	10.54	13.32	13.32
		2 Wire Copper Unbundled Sub-Loop Distribution - Zone 3	I	3	UEF	UCS2X	8.81	110.71	37.89	94.41	13.09			20.35	10.54	13.32	13.32
		Order Coordination for Unbundled Sub-Loops, per sub-loop pair			UEF	USBMC		34.29	34.29								
		4 Wire Copper Unbundled Sub-Loop Distribution - Zone 1	I	1	UEF	UCS4X	6.52	117.12	44.30	99.96	16.98			20.35	10.54	13.32	13.32
		4 Wire Copper Unbundled Sub-Loop Distribution - Zone 2	I	2	UEF	UCS4X	8.52	117.12	44.30	99.96	16.98			20.35	10.54	13.32	13.32
		4 Wire Copper Unbundled Sub-Loop Distribution - Zone 3	I	3	UEF	UCS4X	11.14	117.12	44.30	99.96	16.98			20.35	10.54	13.32	13.32
		Order Coordination for Unbundled Sub-Loops, per sub-loop pair			UEF	USBMC		34.29	34.29								
		Loop Testing - Basic 1st Half Hour			UEF	URET1		78.92	78.92								
		Loop Testing - Basic Additional Half Hour			UEF	URETA		23.33	23.33								
	Unbundled Network Terminating Wire (UNTW)																
		Unbundled Network Terminating Wire (UNTW) per Pair	I		UENTW	UENPP	0.4555	2.48	2.48					20.35	10.54	13.32	13.32
	Network Interface Device (NID)																
		Network Interface Device (NID) - 1-2 lines			UENTW	UND12		89.69	54.56	0.6391	0.6391			20.35	10.54	13.32	13.32
		Network Interface Device (NID) - 1-6 lines			UENTW	UND16		129.65	94.51	0.6522	0.6522			20.35	10.54	13.32	13.32
		Network Interface Device Cross Connect - 2 W			UENTW	UNDC2		11.11	11.11					20.35	10.54	13.32	13.32
		Network Interface Device Cross Connect - 4W			UENTW	UNDC4		11.11	11.11					20.35	10.54	13.32	13.32
UNE OTHER, PROVISIONING ONLY - NO RATE																	
		NID - Dispatch and Service Order for NID installation			UENTW	UNDBX	0.00	0.00									
		UNTW Circuit Id Establishment, Provisioning Only - No Rate			UENTW	UENCE	0.00	0.00									
		Unbundled Contract Name, Provisioning Only - No Rate			UEANL,UEF,UEQ,UENTW	UNECN	0.00	0.00									
UNE OTHER, PROVISIONING ONLY - NO RATE																	
		Unbundled Contact Name, Provisioning Only - no rate			UAL,UCL,UDC,UDL,UDN,UEA,UHL,ULC	UNECN	0.00	0.00									

UNBUNDLED NETWORK ELEMENTS - Tennessee														Attachment: 1		Table 1	
CATEGORY		RATE ELEMENTS	Interim	Zone	BCS	USOC	RATES ($)					Svc Order Submitted Elec per LSR	Svc Order Submitted Manually per LSR	Incremental Charge - Manual Svc Order vs. Electronic-1st	Incremental Charge - Manual Svc Order vs. Electronic-Add'l	Incremental Charge - Manual Svc Order vs. Electronic-Disc 1st	Incremental Charge - Manual Svc Order vs. Electronic-Disc Add'l
							Rec	Nonrecurring		Nonrecurring Disconnect		OSS Rates ($)					
								First	Add'l	First	Add'l	SOMEC	SOMAN	SOMAN	SOMAN	SOMAN	SOMAN
		Unbundled Sub-Loop Feeder-2 Wire Cross Box Jumper - no rate			UEA,UDN,UCL,UDC	USBFQ	0.00	0.00									
		Unbundled Sub-Loop Feeder-4 Wire Cross Box Jumper - no rate			UEA,USL,UCL,UDL	USBFR	0.00	0.00									
		Unbundled DS1 Loop - Superframe Format Option - no rate			USL	CCOSF	0.00	0.00									
		Unbundled DS1 Loop - Expanded Superframe Format option - no rate			USL	CCOEF	0.00	0.00									
HIGH CAPACITY UNBUNDLED LOCAL LOOP																	
		High Capacity Unbundled Local Loop - DS3 - Per Mile per month			UE3	1L5ND	9.19										
		High Capacity Unbundled Local Loop - DS3 - Facility Termination per month			UE3	UE3PX	374.24	595.37	304.50	234.83	170.16			36.84	36.84		
		High Capacity Unbundled Local Loop - STS-1 - Per Mile per month			UDLSX	1L5ND	9.19										
		High Capacity Unbundled Local Loop - STS-1 - Facility Termination per month			UDLSX	UDLS1	389.35	595.37	304.50	215.82	151.15			36.84	36.84		
	Note (1): Rates provided in TN for both electronic and manual Loop Makeup are interim and subject to retro-active true-up adjustments pending a permanent rate ruling on these rate elements from the Tennessee Regulatory Authority.																
LOOP MAKE-UP																	
		Loop Makeup - Preordering Without Reservation, per working or spare facility queried (Manual).	R		UMK	UMKLW		0.76	0.76					19.99	19.99	19.99	19.99
		Loop Makeup - Preordering With Reservation, per spare facility queried (Manual).	R		UMK	UMKLP		0.76	0.76					19.99	19.99	19.99	19.99
		Loop Makeup--With or Without Reservation, per working or spare facility queried (Mechanized)	R		UMK	UMKMQ		0.76	0.76								
LINE SHARING AND LINE SPLITTING																	
	NOTE 1: The Line Sharing monthly recurring rates for all installations completed from October 02, 2003 through midnight October 01, 2004 shall be billed as follows:																
	NOTE 1: 10/02/2003 – 10/01/2004: 25% of the rate for an unbundled copper loop non-designed ("UCLND")																
	NOTE 1: 10/02/2004 – 10/01/2005: 50% of the rate for UCLND																
	NOTE 1: 10/02/2005 – 10/01/2006: 75% of the rate for UCLND																
	NOTE 1: Above will apply to USOCS: ULSDT and ULSCT																
	****NOTE 2: The Line Sharing monthly recurring rates with USOCs ULSDC and ULSCC applies only to circuits installed and inservice on or before October 1, 2003**																
	LINE SHARING																
	SPLITTERS-CENTRAL OFFICE BASED																
		Line Sharing Splitter, per System 96 Line Capacity			ULS	ULSDA	100.00	150.00	0.00	0.00	0.00			20.35	10.54	13.32	13.32
		Line Sharing Splitter, per System 24 Line Capacity			ULS	ULSDB	25.00	150.00	0.00	0.00	0.00			20.35	10.54	13.32	13.32
		Line Sharing-DLEC Owned Splitter in CO-CFA activaton-deactivation (per LSOD)			ULS	ULSDG		163.06	0.00	92.71	0.00			20.35	10.54	13.32	13.32
	END USER ORDERING-CENTRAL OFFICE BASED LINE SHARING																
		Line Sharing - per Line Activation (BST Owned splitter) - OBSOLETE see **NOTE 2			ULS	ULSDC	0.61	40.00	31.39	0.00	0.00			20.35	10.54	13.32	13.32
		Line Share Service, TRO per line activation, BST owned splitter - Central Office Located (25% of UCLND) - please see NOTE 1 (E:10/2/2003)			ULS	ULSDT	2.94	40.00	31.39	0.00	0.00						
		Line Share Service, TRO per line activation, BST owned splitter - Central Office Located (50% of UCLND) - please see NOTE 1 (E:10/2/2004)			ULS	ULSDT	5.87	40.00	31.39	0.00	0.00						
		Line Share Service, TRO per line activation, BST owned splitter - Central Office Located (75% of UCLND) - please see NOTE 1 (E:10/2/2005)			ULS	ULSDT	8.81	40.00	31.39	0.00	0.00						
		Line Sharing - per Subsequent Activity per Line Rearrangement(BST Owned Splitter)			ULS	ULSDS		30.00	15.00					20.35	10.54	13.32	13.32
		Line Sharing - per Subsequent Activity per Line Rearrangement(DLEC Owned Splitter)			ULS	ULSCS		30.00	15.00					20.35	10.54	13.32	13.32
		Line Sharing - per Line Activation (DLEC owned Splitter) - OBSOLETE see **NOTE 2			ULS	ULSCC	0.61	47.44	19.31	0.00	0.00			20.35	10.54	13.32	13.32
		Line Share Service, TRO per line activation, CLEC owned splitter - Central Office Located (25% of UCLND) - please see NOTE 1 (E:10/2/2003)			ULS	ULSCT	2.94	47.44	19.31	0.00	0.00						

UNBUNDLED NETWORK ELEMENTS - Tennessee														Attachment: 1		Table 1	
CATEGORY		RATE ELEMENTS	Interim	Zone	BCS	USOC	RATES ($)					Svc Order Submitted Elec per LSR	Svc Order Submitted Manually per LSR	Incremental Charge - Manual Svc Order vs. Electronic-1st	Incremental Charge - Manual Svc Order vs. Electronic-Add'l	Incremental Charge - Manual Svc Order vs. Electronic-Disc 1st	Incremental Charge - Manual Svc Order vs. Electronic-Disc Add'l
							Rec	Nonrecurring		Nonrecurring Disconnect		OSS Rates ($)					
								First	Add'l	First	Add'l	SOMEC	SOMAN	SOMAN	SOMAN	SOMAN	SOMAN
		Line Share Service, TRO per line activation, CLEC owned splitter - Central Office Located (50% of UCLND) - please see NOTE 1 (E:10/2/2004)			ULS	ULSCT	5.87	47.44	19.31	0.00	0.00						
		Line Share Service, TRO per line activation, CLEC owned splitter - Central Office Located (75% of UCLND) - please see NOTE 1 (E:10/2/2005)			ULS	ULSCT	8.81	47.44	19.31	0.00	0.00						
	LINE SPLITTING																
	END USER ORDERING-CENTRAL OFFICE BASED																
		Line Splitting - per line activation DLEC owned splitter			UEPSR UEPSB	UREOS	0.61										
		Line Splitting - per line activation BST owned - physical			UEPSR UEPSB	UREBP	0.61	48.96	21.39	35.06	10.79			20.35	10.54	13.32	13.32
		Line Splitting - per line activation BST owned - virtual			UEPSR UEPSB	UREBV	0.61	48.96	21.39	35.06	10.79			20.35	10.54	13.32	13.32
	MAINTENANCE																
		No Trouble Found - per 1/2 hour increments - Basic						80.00	55.00								
		No Trouble Found - per 1/2 hour increments - Overtime						120.00	82.50								
		No Trouble Found - per 1/2 hour increments - Premium						160.00	110.00								
UNBUNDLED DEDICATED TRANSPORT																	
	INTEROFFICE CHANNEL - DEDICATED TRANSPORT																
		Interoffice Channel - Dedicated Transport - 2-Wire Voice Grade - Per Mile per month			U1TVX	1L5XX	0.0054										
		Interoffice Channel - Dedicated Transport- 2- Wire Voice Grade - Facility Termination			U1TVX	U1TV2	18.58	55.39	17.37	27.96	3.51			20.35	21.09		
		Interoffice Channel - Dedicated Transpor t- 2-Wire Voice Grade Rev Bat. - Per Mile per month			U1TVX	1L5XX	0.0054										
		Interoffice Channel - Dedicated Transport- 2- Wire VG Rev Bat. - Facility Termination			U1TVX	U1TR2	18.58	55.39	17.37	27.96	3.51			20.35	21.09		
		Interoffice Channel - Dedicated Transport - 4-Wire Voice Grade - Per Mile per month			U1TVX	1L5XX	0.0054										
		Interoffice Channel - Dedicated Transport - 4- Wire Voice Grade - Facility Termination			U1TVX	U1TV4	24.09	37.87	26.02	30.78	13.07			15.08	15.08		
		Interoffice Channel - Dedicated Transport - 56 kbps - per mile per month			U1TDX	1L5XX	0.0174										
		Interoffice Channel - Dedicated Transport - 56 kbps - Facility Termination			U1TDX	U1TD5	17.98	55.39	17.37	27.96	3.51			20.35	21.09		
		Interoffice Channel - Dedicated Transport - 64 kbps - per mile per month			U1TDX	1L5XX	0.0174										
		Interoffice Channel - Dedicated Transport - 64 kbps - Facility Termination			U1TDX	U1TD6	17.98	55.39	17.37	27.96	3.51			20.35	21.09		
		Interoffice Channel - Dedicated Channel - DS1 - Per Mile per month			U1TD1	1L5XX	0.3562										
		Interoffice Channel - Dedicated Tranport - DS1 - Facility Termination			U1TD1	U1TF1	77.86	112.40	76.27	19.55	14.99			20.35	21.09		
		Interoffice Channel - Dedicated Transport - DS3 - Per Mile per month			U1TD3	1L5XX	2.34										
		Interoffice Channel - Dedicated Transport - DS3 - Facility Termination per month			U1TD3	U1TF3	848.99	395.29	176.56	109.04	105.91			36.84	36.84		
		Interoffice Channel - Dedicated Transport - STS-1 - Per Mile per month			U1TS1	1L5XX	2.34										
		Interoffice Channel - Dedicated Transport - STS-1 - Facility Termination			U1TS1	U1TFS	849.30	395.29	176.56	109.04	105.91			36.84	36.84		
DARK FIBER																	
		Dark Fiber, Four Fiber Strands, Per Route Mile or Fraction Thereof per month - Interoffice Channel			UDF, UDFCX	1L5DF	28.74										
		NRC Dark Fiber - Interoffice Channel			UDF, UDFCX	UDF14		1,121.00	153.19	580.26	357.17			20.35	10.54	13.32	13.32
		Dark Fiber, Four Fiber Strands, Per Route Mile or Fraction Thereof per month - Local Loop			UDF, UDFCX	1L5DL	58.83										
		NRC Dark Fiber - Local Loop			UDF, UDFCX	UDFL4		1,121.00	153.19	580.26	357.17			20.35	10.54	13.32	13.32
8XX ACCESS TEN DIGIT SCREENING																	
		8XX Access Ten Digit Screening, Per Call			OHD		0.0005192										

UNBUNDLED NETWORK ELEMENTS - Tennessee														Attachment: 1		Table 1	
CATEGORY		RATE ELEMENTS	Interim	Zone	BCS	USOC	RATES ($)					Svc Order Submitted Elec per LSR	Svc Order Submitted Manually per LSR	Incremental Charge - Manual Svc Order vs. Electronic-1st	Incremental Charge - Manual Svc Order vs. Electronic-Add'l	Incremental Charge - Manual Svc Order vs. Electronic-Disc 1st	Incremental Charge - Manual Svc Order vs. Electronic-Disc Add'l
							Rec	Nonrecurring		Nonrecurring Disconnect		OSS Rates ($)					
								First	Add'l	First	Add'l	SOMEC	SOMAN	SOMAN	SOMAN	SOMAN	SOMAN
		8XX Access Ten Digit Screening, Reservation Charge Per 8XX Number Reserved			OHD	N8R1X		5.21	0.76					20.35	20.35	13.28	13.28
		8XX Access Ten Digit Screening, Per 8XX No. Established W/O POTS Translations			OHD			11.47	1.46	7.34	0.7602			20.35	20.35	13.28	13.28
		8XX Access Ten Digit Screening, Per 8XX No. Established With POTS Translations			OHD	N8FTX		11.47	1.46	7.34	0.7602			20.35	20.35	13.28	13.28
		8XX Access Ten Digit Screening, Customized Area of Service Per 8XX Number			OHD	N8FCX		4.47	2.24					20.35	20.35	13.28	13.28
		8XX Access Ten Digit Screening, Multiple InterLATA CXR Routing Per CXR Requested Per 8XX No.			OHD	N8FMX		5.23	3.00					20.35	20.35	13.28	13.28
		8XX Access Ten Digit Screening, Change Charge Per Request			OHD	N8FAX		5.97	0.76					20.35	20.35	13.28	13.28
		8XX Access Ten Digit Screening, Call Handling and Destination Features			OHD	N8FDX		4.47						20.35	20.35	13.28	13.28
LINE INFORMATION DATA BASE ACCESS (LIDB)																	
		LIDB Common Transport Per Query			OQT		0.0000354										
		LIDB Validation Per Query			OQU		0.0117403										
		LIDB Originating Point Code Establishment or Change			OQT, OQU	NRBPX		49.03						20.35	20.35	13.28	13.28
SIGNALING (CCS7)																	
		CCS7 Signaling Termination, Per STP Port			UDB	PT8SX	138.41										
		CCS7 Signaling Usage, Per TCAP Message			UDB		0.0000916										
		CCS7 Signaling Connection, Per link (A link)			UDB	TPP++	17.84	130.84	130.84					20.35	20.35	13.32	13.32
		CCS7 Signaling Connection, Per link (B link) (also known as D link)			UDB	TPP++	17.84	130.84	130.84					20.35	20.35	13.32	13.32
		CCS7 Signaling Usage, Per ISUP Message			UDB		0.0000373										
		CCS7 Signaling Usage Surrogate, per link per LATA			UDB	STU56	352.30										
		Signaling Point Code, per Originating Point Code Establishment or Change, per STP			UDB	CCAPO		121.77	121.77					20.35	20.35	13.32	13.32
CALLING NAME (CNAM) SERVICE																	
		CNAM For DB Owners - Service Establishment			OQV			43.27									
		CNAM For Non DB Owners - Service Establishment			OQV			43.27									
		CNAM For DB Owners - Service Provisioning With Point Code Establishment			OQV			1,868.00	1,382.00								
		CNAM For Non DB Owners - Service Provisioning With Point Code Establishment			OQV			645.50	432.23								
		CNAM for DB Owners, Per Query			OQV		0.0010541										
		CNAM for Non DB Owners, Per Query			OQV		0.0010541										
		CNAM (Non-Databs Owner), NRC, applies when using the Character Based User Interface (CHUI)			OQV	CDDCH								20.35	20.35	13.28	13.28
SELECTIVE ROUTING																	
		Selective Routing Per Unique Line Class Code Per Request Per Switch						179.60	179.60					20.35	20.35		
VIRTUAL COLLOCATION																	
		Virtual Collocation-2 Wire Cross Connects (Loop) for Line Splitting			UEPSR UEPSB	VE1LS	0.57	11.62	9.90	10.38	8.66			19.99	19.99	19.99	19.99
PHYSICAL COLLOCATION																	
		Physical Collocation-2 Wire Cross Connects (Loop) for Line Splitting			UEPSR UEPSB	PE1LS	0.7905	11.62	9.90	10.38	8.66			19.99	19.99	19.99	19.99
AIN SELECTIVE CARRIER ROUTING																	
		Regional Service Establishment			SRC	SRCEC		190,638.00						20.35			
		End Office Establishment			SRC	SRCEO		317.55	317.55	3.19	3.19			20.35	20.35	13.28	13.28
		Query NRC, per query			SRC		0.0206047										
AIN - BELLSOUTH AIN SMS ACCESS SERVICE																	
		AIN SMS Access Service - Service Establishment, Per State, Initial Setup			A1N	CAMSE		135.56	135.56					20.35	20.35	13.28	13.28
		AIN SMS Access Service - Port Connection - Dial/Shared Access			A1N	CAMDP		41.75	41.75					20.35	20.35	13.28	13.28
		AIN SMS Access Service - Port Connection - ISDN Access			A1N	CAM1P		41.75	41.75					20.35	20.35	13.28	13.28
		AIN SMS Access Service - User Identification Codes - Per User ID Code			A1N	CAMAU		96.63	96.63					20.35	20.35	13.28	13.28

UNBUNDLED NETWORK ELEMENTS - Tennessee														Attachment: 1		Table 1	
CATEGORY		RATE ELEMENTS	Interim	Zone	BCS	USOC	RATES ($)					Svc Order Submitted Elec per LSR	Svc Order Submitted Manually per LSR	Incremental Charge - Manual Svc Order vs. Electronic-1st	Incremental Charge - Manual Svc Order vs. Electronic-Add'l	Incremental Charge - Manual Svc Order vs. Electronic-Disc 1st	Incremental Charge - Manual Svc Order vs. Electronic-Disc Add'l
							Rec	Nonrecurring		Nonrecurring Disconnect		OSS Rates ($)					
								First	Add'l	First	Add'l	SOMEC	SOMAN	SOMAN	SOMAN	SOMAN	SOMAN
		AIN SMS Access Service - Security Card, Per User ID Code, Initial or Replacement			A1N	CAMRC		113.67	113.67					20.35	20.35	13.28	13.28
		AIN SMS Access Service - Storage, Per Unit (100 Kilobytes)					0.0024										
		AIN SMS Access Service - Session, Per Minute					0.0820123										
		AIN SMS Access Service - Company Performed Session, Per Minute					2.27										
AIN - BELLSOUTH AIN TOOLKIT SERVICE																	
		AIN Toolkit Service - Service Establishment Charge, Per State, Initial Setup			CAM	BAPSC		132.04	132.04					20.35	20.35	13.28	13.28
		AIN Toolkit Service - Training Session, Per Customer				BAPVX		7,915.00	7,915.00					20.35	20.35	13.28	13.28
		AIN Toolkit Service - Trigger Access Charge, Per Trigger, Per DN, Term. Attempt				BAPTT		31.21	31.21					20.35	20.35	13.28	13.28
		AIN Toolkit Service - Trigger Access Charge, Per Trigger, Per DN, Off-Hook Delay				BAPTD		31.21	31.21					20.35	20.35	13.28	13.28
		AIN Toolkit Service - Trigger Access Charge, Per Trigger, Per DN, Off-Hook Immediate				BAPTM		31.21	31.21					20.35	20.35	13.28	13.28
		AIN Toolkit Service - Trigger Access Charge, Per Trigger, Per DN, 10-Digit PODP				BAPTO		85.24	85.24					20.35	20.35	13.28	13.28
		AIN Toolkit Service - Trigger Access Charge, Per Trigger, Per DN, CDP				BAPTC		85.24	85.24					20.35	20.35	13.28	13.28
		AIN Toolkit Service - Trigger Access Charge, Per Trigger, Per DN, Feature Code				BAPTF		85.24	85.24					20.35	20.35	13.28	13.28
		AIN Toolkit Service - Query Charge, Per Query					0.0211882										
		AIN Toolkit Service - Type 1 Node Charge, Per AIN Toolkit Subscription, Per Node, Per Query					0.0054774										
		AIN Toolkit Service - SCP Storage Charge, Per SMS Access Account, Per 100 Kilobytes					1.50										
		AIN Toolkit Service - Monthly report - Per AIN Toolkit Service Subscription			CAM	BAPMS	17.43	33.52	33.52					20.35	20.35	13.28	13.28
		AIN Toolkit Service - Special Study - Per AIN Toolkit Service Subscription			CAM	BAPLS	0.1321116	36.23	36.23					20.35	20.35	13.28	13.28
		AIN Toolkit Service - Call Event Report - Per AIN Toolkit Service Subscription			CAM	BAPDS	17.35	33.52	33.52					20.35	20.35	13.28	13.28
		AIN Toolkit Service - Call Event Special Study - Per AIN Toolkit Service Subscription			CAM	BAPES	0.0511435	36.23	36.23					20.35	20.35	13.28	13.28
ENHANCED EXTENDED LINK (EELs)																	
	NOTE: The monthly recurring and non-recurring charges below will apply and the Switch-As-Is Charge will not apply for UNE combinations provisioned as ' Ordinarily Combined' Network Elements.																
	NOTE: The monthly recurring and the Switch-As-Is Charge and not the non-recurring charges below will apply for UNE combinations provisioned as ' Currently Combined' Network Elements.																
	EXTENTED 2-WIRE VOICE GRADE EXTENDED LOOP WITH DEDICATED DS1 INTEROFFICE TRANSPORT																
		First 2-Wire VG Loop (SL2) in Combination - Zone 1		1	UNCVX	UEAL2	16.56	108.76	35.47	72.94	10.86			20.35	21.09		
		First 2-Wire VG Loop (SL2) in Combination - Zone 2		2	UNCVX	UEAL2	21.63	108.76	35.47	72.94	10.86			20.35	21.09		
		First 2-Wire VG Loop (SL2) in Combination - Zone 3		3	UNCVX	UEAL2	28.28	108.76	35.47	72.94	10.86			20.35	21.09		
		Interoffice Transport - Dedicated - DS1 combination - Per Mile per month			UNC1X	1L5XX	0.3562										
		Interoffice Transport - Dedicated - DS1 combination - Facility Termination per month			UNC1X	U1TF1	77.86	171.24	113.12	70.07	30.90			20.35	21.09		
		1/0 Channelization System in combination Per Month			UNC1X	MQ1	80.77	105.76	14.48	3.04	2.74						
		Voice Grade COCI - Per Month			UNCVX	1D1VG	0.91	5.70	4.42								
		Each Additional 2-Wire VG Loop (SL 2) in Combination - Zone 1		1	UNCVX	UEAL2	16.56	108.76	35.47	72.94	10.86			20.35	21.09		
		Each Additional 2-Wire VG Loop (SL 2) in Combination - Zone 2		2	UNCVX	UEAL2	21.63	108.76	35.47	72.94	10.86			20.35	21.09		
		Each Additional 2-Wire VG Loop (SL 2) in Combination - Zone 3		3	UNCVX	UEAL2	28.28	108.76	35.47	72.94	10.86			20.35	21.09		
		Voice Grade COCI - Per Month			UNCVX	1D1VG	0.91	5.70	4.42								
		Nonrecurring Currently Combined Network Elements Switch -As-Is Charge			UNC1X	UNCCC		52.73	24.62	9.12	9.12			20.35	21.09		
	EXTENDED 4-WIRE VOICE GRADE EXTENDED LOOP WITH DEDICATED DS1 INTEROFFICE TRANSPORT																

UNBUNDLED NETWORK ELEMENTS - Tennessee														Attachment: 1		Table 1	
CATEGORY		RATE ELEMENTS	Interim	Zone	BCS	USOC	RATES ($)					Svc Order Submitted Elec per LSR	Svc Order Submitted Manually per LSR	Incremental Charge - Manual Svc Order vs. Electronic-1st	Incremental Charge - Manual Svc Order vs. Electronic-Add'l	Incremental Charge - Manual Svc Order vs. Electronic-Disc 1st	Incremental Charge - Manual Svc Order vs. Electronic-Disc Add'l
							Rec	Nonrecurring		Nonrecurring Disconnect		OSS Rates ($)					
								First	Add'l	First	Add'l	SOMEC	SOMAN	SOMAN	SOMAN	SOMAN	SOMAN
		First 4-Wire Analog Voice Grade Loop in Combination - Zone 1		1	UNCVX	UEAL4	24.70	108.76	35.47	72.94	10.86			20.35	21.09		
		First 4-Wire Analog Voice Grade Loop in Combination - Zone 2		2	UNCVX	UEAL4	32.26	108.76	35.47	72.94	10.86			20.35	21.09		
		First 4-Wire Analog Voice Grade Loop in Combination - Zone 3		3	UNCVX	UEAL4	42.18	108.76	35.47	72.94	10.86			20.35	21.09		
		Interoffice Transport - Dedicated - DS1 combination - Per Mile Per Month			UNC1X	1L5XX	0.3562										
		Interoffice Transport - Dedicated - DS1 - Facility Termination Per Month			UNC1X	U1TF1	77.86	171.24	113.12	70.07	30.90			20.35	21.09		
		1/0 Channel System in combination Per Month			UNC1X	MQ1	80.77	105.76	14.48	3.04	2.74						
		Voice Grade COCI in combination - per month			UNCVX	1D1VG	0.91	5.70	4.42								
		Additional 4-Wire Analog Voice Grade Loop in same DS1 Interoffice Transport Combination - Zone 1		1	UNCVX	UEAL4	24.70	108.76	35.47	72.94	10.86			20.35	21.09		
		Additional 4-Wire Analog Voice Grade Loop in same DS1 Interoffice Transport Combination - Zone 2		2	UNCVX	UEAL4	32.26	108.76	35.47	72.94	10.86			20.35	21.09		
		Additional 4-Wire Analog Voice Grade Loop in same DS1 Interoffice Transport Combination - Zone 3		3	UNCVX	UEAL4	42.18	108.76	35.47	72.94	10.86			20.35	21.09		
		Additional Voice Grade COCI in combination - per month			UNCVX	1D1VG	0.91	5.70	4.42								
		Nonrecurring Currently Combined Network Elements Switch -As-Is Charge			UNC1X	UNCCC		52.73	24.62	9.12	9.12			20.35	21.09		
	EXTENDED 4-WIRE 56 KBPS EXTENDED DIGITAL LOOP WITH DEDICATED DS1 INTEROFFICE TRANSPORT																
		First 4-Wire 56Kbps Digital Grade Loop in Combination - Zone 1		1	UNCDX	UDL56	31.10	108.76	35.47	72.94	10.86			20.35	21.09		
		First 4-Wire 56Kbps Digital Grade Loop in Combination - Zone 2		2	UNCDX	UDL56	40.61	108.76	35.47	72.94	10.86			20.35	21.09		
		First 4-Wire 56Kbps Digital Grade Loop in Combination - Zone 3		3	UNCDX	UDL56	53.11	108.76	35.47	72.94	10.86			20.35	21.09		
		Interoffice Transport - Dedicated - DS1 combination - Per Mile Per Month			UNC1X	1L5XX	0.3562										
		Interoffice Transport - Dedicated - DS1 - combination Facility Termination Per Month			UNC1X	U1TF1	77.86	171.24	113.12	70.07	30.90			20.35	21.09		
		1/0 Channel System in combination Per Month			UNC1X	MQ1	80.77	105.76	14.48	3.04	2.74						
		OCU-DP COCI (data) per month (2.4-64kbs)			UNCDX	1D1DD	0.91	5.70	4.42								
		Additional 4-Wire 56Kbps Digital Grade Loop in same DS1 Interoffice Transport Combination - Zone 1		1	UNCDX	UDL56	31.10	108.76	35.47	72.94	10.86			20.35	21.09		
		Additional 4-Wire 56Kbps Digital Grade Loop in same DS1 Interoffice Transport Combination - Zone 2		2	UNCDX	UDL56	40.61	108.76	35.47	72.94	10.86			20.35	21.09		
		Additional 4-Wire 56Kbps Digital Grade Loop in same DS1 Interoffice Transport Combination - Zone 3		3	UNCDX	UDL56	53.11	108.76	35.47	72.94	10.86			20.35	21.09		
		Additional OCU-DP COCI (data) - in combination per month (2.4-64kbs)			UNCDX	1D1DD	0.91	5.70	4.42								
		Nonrecurring Currently Combined Network Elements Switch -As-Is Charge			UNC1X	UNCCC		52.73	24.62	9.12	9.12			20.35	21.09		
	EXTENDED 4-WIRE 64 KBPS EXTENDED DIGITAL LOOP WITH DEDICATED DS1 INTEROFFICE TRANSPORT																
		First 4-Wire 64Kbps Digital Grade Loop in Combination - Zone 1		1	UNCDX	UDL64	31.10	108.76	35.47	72.94	10.86			20.35	21.09		
		First 4-Wire 64Kbps Digital Grade Loop in Combination - Zone 2		2	UNCDX	UDL64	40.61	108.76	35.47	72.94	10.86			20.35	21.09		
		First 4-Wire 64Kbps Digital Grade Loop in Combination - Zone 3		3	UNCDX	UDL64	53.11	108.76	35.47	72.94	10.86			20.35	21.09		
		Interoffice Transport - Dedicated - DS1 combination - Per Mile Per Month			UNC1X	1L5XX	0.3562										
		interoffice Transport - Dedicated - DS1 combination - Facility Termination Per Month			UNC1X	U1TF1	77.86	171.24	113.12	70.07	30.90			20.35	21.09		
		1/0 Channel System in combination Per Month			UNC1X	MQ1	80.77	105.76	14.48	3.04	2.74						
		OCU-DP COCI (data) - in combination - per month (2.4-64kbs)			UNCDX	1D1DD	0.91	5.70	4.42								
		Additional 4-Wire 64Kbps Digital Grade Loop in same DS1 Interoffice Transport Combination - Zone 1		1	UNCDX	UDL64	31.10	108.76	35.47	72.94	10.86			20.35	21.09		

UNBUNDLED NETWORK ELEMENTS - Tennessee														Attachment: 1		Table 1	
CATEGORY		RATE ELEMENTS	Interim	Zone	BCS	USOC	RATES ($)					Svc Order Submitted Elec per LSR	Svc Order Submitted Manually per LSR	Incremental Charge - Manual Svc Order vs. Electronic-1st	Incremental Charge - Manual Svc Order vs. Electronic-Add'l	Incremental Charge - Manual Svc Order vs. Electronic-Disc 1st	Incremental Charge - Manual Svc Order vs. Electronic-Disc Add'l
							Rec	Nonrecurring		Nonrecurring Disconnect		OSS Rates ($)					
								First	Add'l	First	Add'l	SOMEC	SOMAN	SOMAN	SOMAN	SOMAN	SOMAN
		Additional 4-Wire 64Kbps Digital Grade Loop in same DS1 Interoffice Transport Combination - Zone 2		2	UNCDX	UDL64	40.61	108.76	35.47	72.94	10.86			20.35	21.09		
		Additional 4-Wire 64Kbps Digital Grade Loop in same DS1 Interoffice Transport Combination - Zone 3		3	UNCDX	UDL64	53.11	108.76	35.47	72.94	10.86			20.35	21.09		
		Additional OCU-DP COCI (data) - in combination - per month (2.4-64kbs)			UNCDX	1D1DD	0.91	5.70	4.42								
		Nonrecurring Currently Combined Network Elements Switch -As-Is Charge			UNC1X	UNCCC		52.73	24.62	9.12	9.12			20.35	21.09		
	EXTENDED 4-WIRE DS1 DIGITAL EXTENDED LOOP WITH DEDICATED DS1 INTEROFFICE TRANSPORT																
		4-Wire DS1 Digital Loop in Combination - Zone 1		1	UNC1X	USLXX	57.73	228.40	161.74	79.87	24.88						
		4-Wire DS1 Digital Loop in Combination - Zone 2		2	UNC1X	USLXX	75.40	228.40	161.74	79.87	24.88						
		4-Wire DS1 Digital Loop in Combination - Zone 3		3	UNC1X	USLXX	98.59	228.40	161.74	79.87	24.88						
		Interoffice Transport - Dedicated - DS1 combination - Per Mile Per Month			UNC1X	1L5XX	0.3562										
		Interoffice Transport - Dedicated - DS1 combination - Facility Termination Per Month			UNC1X	U1TF1	77.86	171.24	113.12	70.07	30.90			20.35	21.09		
		Nonrecurring Currently Combined Network Elements Switch -As-Is Charge			UNC1X	UNCCC		52.73	24.62	9.12	9.12			20.35	21.09		
	EXTENDED 4-WIRE DS1 DIGITAL EXTENDED LOOP WITH DEDICATED DS3 INTEROFFICE TRANSPORT																
		First DS1Loop in Combination - Zone 1		1	UNC1X	USLXX	57.73	228.40	161.74	79.87	24.88			20.35	21.09		
		First DS1Loop in Combination - Zone 2		2	UNC1X	USLXX	75.40	228.40	161.74	79.87	24.88			20.35	21.09		
		First DS1Loop in Combination - Zone 3		3	UNC1X	USLXX	98.59	228.40	161.74	79.87	24.88			20.35	21.09		
		Interoffice Transport - Dedicated - DS3 combination - Per Mile Per Month			UNC3X	1L5XX	2.34										
		Interoffice Transport - Dedicated - DS3 - Facility Termination per month			UNC3X	U1TF3	854.97	482.01	153.81	64.43	35.43			36.84	36.84		
		3/1Channel System in combination per month			UNC3X	MQ3	222.98	156.02	49.41	17.12	6.77						
		DS1 COCI in combination per month			UNC1X	UC1D1	17.58	5.70	4.42								
		Additional DS1Loop in DS3 Interoffice Transport Combination - Zone 1		1	UNC1X	USLXX	57.73	228.40	161.74	79.87	24.88			20.35	21.09		
		Additional DS1Loop in DS3 Interoffice Transport Combination - Zone 2		2	UNC1X	USLXX	75.40	228.40	161.74	79.87	24.88			20.35	21.09		
		Additional DS1Loop in DS3 Interoffice Transport Combination - Zone 3		3	UNC1X	USLXX	98.59	228.40	161.74	79.87	24.88			20.35	21.09		
		Additoinal DS1 COCI in combination per month			UNC1X	UC1D1	17.58	5.70	4.42								
		Nonrecurring Currently Combined Network Elements Switch -As-Is Charge			UNC3X	UNCCC		52.73	24.62	9.12	9.12			20.35	21.09		
	EXTENDED 2-WIRE VOICE GRADE EXTENDED LOOP/ 2 WIRE VOICE GRADE INTEROFFICE TRANSPORT																
		2-WireVG Loop in combination - Zone 1		1	UNCVX	UEAL2	16.56	108.76	35.47	72.94	10.86						
		2-WireVG Loop in combination - Zone 2		2	UNCVX	UEAL2	21.63	108.76	35.47	72.94	10.86						
		2-WireVG Loop in combination - Zone 3		3	UNCVX	UEAL2	28.28	108.76	35.47	72.94	10.86						
		Interoffice Transport - 2-wire VG - Dedicated- Per Mile Per Month			UNCVX	1L5XX	0.0174										
		Interoffice Transport - 2-wire VG - Dedicated - Facility Termination per month			UNCVX	U1TV2	21.79	79.83	44.08	69.32	31.00			20.35	21.09		
		Nonrecurring Currently Combined Network Elements Switch -As-Is Charge			UNCVX	UNCCC		52.73	24.62	9.12	9.12			20.35	21.09		
	EXTENDED 4-WIRE VOICE GRADE EXTENDED LOOP/ 4 WIRE VOICE GRADE INTEROFFICE TRANSPORT																
		4-WireVG Loop in combination - Zone 1		1	UNCVX	UEAL4	24.70	108.76	35.47	72.94	10.86						
		4-WireVG Loop in combination - Zone 2		2	UNCVX	UEAL4	32.26	108.76	35.47	72.94	10.86						
		4-WireVG Loop in combination - Zone 3		3	UNCVX	UEAL4	42.18	108.76	35.47	72.94	10.86						
		Interoffice Transport - 4-wire VG - Dedicated - Per Mile Per Month			UNCVX	1L5XX	0.0174										
		Interoffice Transport - 4-wire VG - Dedicated - Facility Termination per month			UNCVX	U1TV4	27.30	79.83	44.08	69.32	31.00			20.35	21.09		
		Nonrecurring Currently Combined Network Elements Switch -As-Is Charge			UNCVX	UNCCC		52.73	24.62	9.12	9.12			20.35	21.09		
	EXTENDED DS3 DIGITAL EXTENDED LOOP WITH DEDICATED DS3 INTEROFFICE TRANSPORT																
		DS3 Local Loop in combination - per mile per month			UNC3X	1L5ND	9.19										

UNBUNDLED NETWORK ELEMENTS - Tennessee														Attachment: 1		Table 1	
CATEGORY	RATE ELEMENTS	Interim	Zone	BCS	USOC	RATES ($)					Svc Order Submitted Elec per LSR	Svc Order Submitted Manually per LSR	Incremental Charge - Manual Svc Order vs. Electronic-1st	Incremental Charge - Manual Svc Order vs. Electronic-Add'l	Incremental Charge - Manual Svc Order vs. Electronic-Disc 1st	Incremental Charge - Manual Svc Order vs. Electronic-Disc Add'l
						Rec	Nonrecurring		Nonrecurring Disconnect		OSS Rates ($)					
							First	Add'l	First	Add'l	SOMEC	SOMAN	SOMAN	SOMAN	SOMAN	SOMAN
	DS3 Local Loop in combination - Facility Termination per month			UNC3X	UE3PX	373.47	240.23	180.87	106.78	45.24						
	Interoffice Transport - Dedicated - DS3 - Per Mile per month			UNC3X	1L5XX	2.34										
	Interoffice Transport - Dedicated - DS3 combination - Facility Termination per month			UNC3X	U1TF3	854.97	482.01	153.81	64.43	35.43			36.84	36.84		
	Nonrecurring Currently Combined Network Elements Switch -As-Is Charge			UNC3X	UNCCC		52.73	24.62	9.12	9.12			36.84	36.84		
	EXTENDED STS-1 DIGITAL EXTENDED LOOP WITH DEDICATED STS-1 INTEROFFICE TRANSPORT															
	STS-1 Local Lolp in combination - per mile per month			UNCSX	1L5ND	9.19										
	STS-1 Local Loop in combination - Facility Termination per month			UNCSX	UDLS1	394.56	240.23	180.87	106.78	45.24						
	Interoffice Transport - Dedicated - STS-1 combination - per mile per month			UNCSX	1L5XX	2.34										
	Interoffice Transport - Dedicated - STS-1 combination - Facility Termination per month			UNCSX	U1TFS	849.30	482.01	153.81	64.43	35.43			36.84	36.84		
	Nonrecurring Currently Combined Network Elements Switch -As-Is Charge			UNCSX	UNCCC		52.73	24.62	9.12	9.12			36.84	36.84		
	EXTENDED 2-WIRE ISDN EXTENDED LOOP WITH DS1 INTEROFFICE TRANSPORT															
	First 2-Wire ISDN Loop in Combination - Zone 1		1	UNCNX	U1L2X	22.22	108.76	35.47	72.94	10.86			20.35	21.09		
	First 2-Wire ISDN Loop in Combination - Zone 2		2	UNCNX	U1L2X	29.02	108.76	35.47	72.94	10.86			20.35	21.09		
	First 2-Wire ISDN Loop in Combination - Zone 3		3	UNCNX	U1L2X	37.95	108.76	35.47	72.94	10.86			20.35	21.09		
	Interoffice Transport - Dedicated - DS1 combination - per mile per month			UNC1X	1L5XX	0.3562										
	Interoffice Transport - Dedicated - DS1 combination - Facility Termination per month			UNC1X	U1TF1	77.86	171.24	113.12	70.07	30.90			20.35	21.09		
	1/0 Channel System in combination - per month			UNC1X	MQ1	80.77	105.76	14.48	3.04	2.74						
	2-wire ISDN COCI (BRITE) - in combination - per month			UNCNX	UC1CA	3.24	5.70	4.42								
	Additional 2-wire ISDN Loop in same DS1Interoffice Transport Combination - Zone 1		1	UNCNX	U1L2X	22.22	108.76	35.47	72.94	10.86			20.35	21.09		
	Additional 2-wire ISDN Loop in same DS1Interoffice Transport Combination - Zone 2		2	UNCNX	U1L2X	29.02	108.76	35.47	72.94	10.86			20.35	21.09		
	Additional 2-wire ISDN Loop in same DS1Interoffice Transport Combination - Zone 3		3	UNCNX	U1L2X	37.95	108.76	35.47	72.94	10.86			20.35	21.09		
	Additional 2-wire ISDN COCI (BRITE) - in combination- per month			UNCNX	UC1CA	3.24	5.70	4.42								
	Nonrecurring Currently Combined Network Elements Switch -As-Is Charge			UNC1X	UNCCC		52.73	24.62	9.12	9.12			20.35	21.09		
	EXTENDED 4-WIRE DS1 DIGITAL EXTENDED LOOP WITH DEDICATED STS-1 INTEROFFICE TRANSPORT															
	First DS1 Loop Combination - Zone 1		1	UNC1X	USLXX	57.73	228.40	161.74	79.87	24.88			20.35	21.09		
	First DS1 Loop Combination - Zone 2		2	UNC1X	USLXX	75.40	228.40	161.74	79.87	24.88			20.35	21.09		
	First DS1 Loop Combination - Zone 3		3	UNC1X	USLXX	98.59	228.40	161.74	79.87	24.88			20.35	21.09		
	Interoffice Transport - Dedicated - STS-1 combination - Per Mile Per Month			UNCSX	1L5XX	2.34										
	Interoffice Transport - Dedicated - STS-1 combination - Facility Termination per month			UNCSX	U1TFS	849.30	482.01	153.81	64.43	35.43			36.84	36.84		
	3/1 Channel System in combination per month			UNCSX	MQ3	222.98	156.02	49.41	17.12	6.77						
	DS1 COCI in combination per month			UNC1X	UC1D1	17.58	5.70	4.42								
	Additional DS1Loop in the same STS-1 Interoffice Transport Combination - Zone 1		1	UNC1X	USLXX	57.73	228.40	161.74	79.87	24.88			20.35	21.09		
	Additional DS1Loop in the same STS-1 Interoffice Transport Combination - Zone 2		2	UNC1X	USLXX	75.40	228.40	161.74	79.87	24.88			20.35	21.09		
	Additional DS1Loop in the same STS-1 Interoffice Transport Combination - Zone 3		3	UNC1X	USLXX	98.59	228.40	161.74	79.87	24.88			20.35	21.09		
	DS1 COCI in combination per month			UNC1X	UC1D1	17.58	5.70	4.42								
	Nonrecurring Currently Combined Network Elements Switch -As-Is Charge			UNCSX	UNCCC		52.73	24.62	9.12	9.12			36.84	36.84		
	EXTENDED 4-WIRE 56 KBPS DIGITAL EXTENDED LOOP WITH 56 KBPS INTEROFFICE TRANSPORT															
	4-wire 56 kbps Local Loop in combination - Zone 1		1	UNCDX	UDL56	31.10	108.76	35.47	72.94	10.86						
	4-wire 56 kbps Local Loop in combination - Zone 2		2	UNCDX	UDL56	40.61	108.76	35.47	72.94	10.86						

UNBUNDLED NETWORK ELEMENTS - Tennessee														Attachment: 1		Table 1	
CATEGORY	RATE ELEMENTS	Interim	Zone	BCS	USOC	RATES ($)					Svc Order Submitted Elec per LSR	Svc Order Submitted Manually per LSR	Incremental Charge - Manual Svc Order vs. Electronic-1st	Incremental Charge - Manual Svc Order vs. Electronic-Add'l	Incremental Charge - Manual Svc Order vs. Electronic-Disc 1st	Incremental Charge - Manual Svc Order vs. Electronic-Disc Add'l
						Rec	Nonrecurring		Nonrecurring Disconnect		OSS Rates ($)					
							First	Add'l	First	Add'l	SOMEC	SOMAN	SOMAN	SOMAN	SOMAN	SOMAN
	4-wire 56 kbps Local Loop in combination - Zone 3		3	UNCDX	UDL56	53.11	108.76	35.47	72.94	10.86						
	Interoffice Transport - Dedicated - 4-wire 56 kbps combination - Per Mile per month			UNCDX	1L5XX	0.0174										
	Interoffice Transport - Dedicated - 4-wire 56 kbps combination - Facility Termination per month			UNCDX	U1TD5	21.19	79.83	44.08	69.32	31.00			20.35	21.09		
	Nonrecurring Currently Combined Network Elements Switch -As-Is Charge			UNCDX	UNCCC		52.73	24.62	9.12	9.12			20.35	21.09		
EXTENDED 4-WIRE 64 KBPS DIGITAL EXTENDED LOOP WITH 64 KBPS INTEROFFICE TRANSPORT																
	4-wire 64 kbps Lcoal Loop in Combination - Zone 1		1	UNCDX	UDL64	31.10	108.76	35.47	72.94	10.86						
	4-wire 64 kbps Lcoal Loop in Combination - Zone 2		2	UNCDX	UDL64	40.61	108.76	35.47	72.94	10.86						
	4-wire 64 kbps Lcoal Loop in Combination - Zone 3		3	UNCDX	UDL64	53.11	108.76	35.47	72.94	10.86						
	Interoffice Transport - Dedicated - 4-wire 64 kbps combination - Per Mile per month			UNCDX	1L5XX	0.0174										
	Interoffice Transport - Dedicated - 4-wire 64 kbps combination - Facility Termination per month			UNCDX	U1TD6	21.19	79.83	44.08	69.32	31.00			20.35	21.09		
	Nonrecurring Currently Combined Network Elements Switch -As-Is Charge			UNCDX	UNCCC		52.73	24.62	9.12	9.12			20.35	21.09		
EXTENDED 2-WIRE VOICE GRADE LOOP WITH DS1 INTEROFFICE TRANSPORT w/ 3/1 MUX																
	First 2-wire VG Loop (SL2) in Combination - Zone 1		1	UNCVX	UEAL2	16.56	108.76	35.47	72.94	10.86			20.35	21.09		
	First 2-wire VG Loop (SL2) in Combination - Zone 2		2	UNCVX	UEAL2	21.63	108.76	35.47	72.94	10.86			20.35	21.09		
	First 2-wire VG Loop (SL2) in Combination - Zone 3		3	UNCVX	UEAL2	28.28	108.76	35.47	72.94	10.86			20.35	21.09		
	First Interoffice Transport - Dedicated - DS1 combination - Per Mile			UNC1X	1L5XX	0.3562										
	First Interoffice Transport - Dedicated - DS1 combination - Facility Termination per month			UNC1X	U1TF1	77.86	171.24	113.12	70.07	30.90			20.35	21.09		
	Per each DS1 Channelization System Per Month			UNC1X	MQ1	80.77	105.76	14.48	3.04	2.74						
	Per each Voice Grade COCI - Per Month per month			UNCVX	1D1VG	0.91	5.70	4.42								
	3/1 Channel System in combination per month			UNC3X	MQ3	222.98	156.02	49.41	17.12	6.77			36.84	36.84		
	Per each DS1 COCI in combination per month			UNC1X	UC1D1	17.58	5.70	4.42								
	Each Additional 2-Wire VG Loop(SL 2) in the same DS1 Interoffice Transport Combination - Zone 1		1	UNCVX	UEAL2	16.56	108.76	35.47	72.94	10.86			20.35	21.09		
	Each Additional 2-Wire VG Loop(SL2) in the same DS1 Interoffice Transport Combination - Zone 2		2	UNCVX	UEAL2	21.63	108.76	35.47	72.94	10.86			20.35	21.09		
	Each Additional 2-Wire VG Loop(SL2) in the same DS1 Interoffice Transport Combination - Zone 3		3	UNCVX	UEAL2	28.28	108.76	35.47	72.94	10.86			20.35	21.09		
	Each Additional Voice Grade COCI in combination - per month			UNCVX	1D1VG	0.91	5.70	4.42								
	Each Additional DS1 Interoffice Channel per mile in same 3/1 Channel System per month			UNC1X	1L5XX	0.3562										
	Each Additional DS1 Interoffice Channel Facility Termination in same 3/1 Channel System per month			UNC1X	U1TF1	77.86	171.24	113.12	70.07	30.90			20.35	21.09		
	Each Additional DS1 COCI combination per month			UNC1X	UC1D1	17.58	5.70	4.42								
	Nonrecurring Currently Combined Network Elements Switch -As-Is Charge			UNC1X	UNCCC		52.73	24.62	9.12	9.12			20.35	21.09		
EXTENDED 4-WIRE VOICE GRADE LOOP WITH DEDICATED DS1 INTEROFFICE TRANSPORT w/ 3/1 MUX																
	First 4-Wire Analog Voice Grade Local Loop in Combination - Zone 1		1	UNCVX	UEAL4	24.70	108.76	35.47	72.94	10.86			20.35	21.09		
	First 4-Wire Analog Voice Grade Local Loop in Combination - Zone 2		2	UNCVX	UEAL4	32.26	108.76	35.47	72.94	10.86			20.35	21.09		
	First 4-Wire Analog Voice Grade Local Loop in Combination - Zone 3		3	UNCVX	UEAL4	42.18	108.76	35.47	72.94	10.86			20.35	21.09		
	First Interoffice Transport - Dedicated - DS1 combination - Per Mile Per Month			UNC1X	1L5XX	0.3562										
	First Interoffice Transport - Dedicated - DS1 - Facility Termination Per Month			UNC1X	U1TF1	77.86	171.24	113.12	70.07	30.90			20.35	21.09		
	Per each 1/0 Channel System in combination Per Month			UNC1X	MQ1	80.77	105.76	14.48	3.04	2.74						
	Per each Voice Grade COCI in combination - per month			UNCVX	1D1VG	0.91	5.70	4.42								
	3/1 Channel System in combination per month			UNC3X	MQ3	222.98	156.02	49.41	17.12	6.77			36.84	36.84		
	Per each DS1 COCI in combination per month			UNC1X	UC1D1	17.58	5.70	4.42								

UNBUNDLED NETWORK ELEMENTS - Tennessee														Attachment: 1		Table 1	
CATEGORY		RATE ELEMENTS	Interim	Zone	BCS	USOC	RATES ($)					Svc Order Submitted Elec per LSR	Svc Order Submitted Manually per LSR	Incremental Charge - Manual Svc Order vs. Electronic-1st	Incremental Charge - Manual Svc Order vs. Electronic-Add'l	Incremental Charge - Manual Svc Order vs. Electronic-Disc 1st	Incremental Charge - Manual Svc Order vs. Electronic-Disc Add'l
							Rec	Nonrecurring		Nonrecurring Disconnect		OSS Rates ($)					
								First	Add'l	First	Add'l	SOMEC	SOMAN	SOMAN	SOMAN	SOMAN	SOMAN
		Additional 4-Wire Analog Voice Grade Loop in same DS1 Interoffice Transport Combination - Zone 1		1	UNCVX	UEAL4	24.70	108.76	35.47	72.94	10.86			20.35	21.09		
		Additional 4-Wire Analog Voice Grade Loop in same DS1 Interoffice Transport Combination - Zone 2		2	UNCVX	UEAL4	32.26	108.76	35.47	72.94	10.86			20.35	21.09		
		Additional 4-Wire Analog Voice Grade Loop in same DS1 Interoffice Transport Combination - Zone 3		3	UNCVX	UEAL4	42.18	108.76	35.47	72.94	10.86			20.35	21.09		
		Each Additional DS1 Interoffice Channel per mile in same 3/1 Channel System per month			UNC1X	1L5XX	0.3562										
		Each Additional DS1 Interoffice Channel Facility Termination in same 3/1 Channel System per month			UNC1X	U1TF1	77.86	171.24	113.12	70.07	30.90			20.35	21.09		
		Additional Voice Grade COCI - in combination - per month			UNCVX	1D1VG	0.91	5.70	4.42								
		Nonrecurring Currently Combined Network Elements Switch -As-Is Charge			UNC1X	UNCCC		52.73	24.62	9.12	9.12			20.35	21.09		
	EXTENDED 4-WIRE 56 KBPS DIGITAL LOOP WITH DEDICATED DS1 INTEROFFICE TRANSPORT w/ 3/1 MUX																
		First 4-Wire 56Kbps Digital Grade Local Loop in Combination - Zone 1		1	UNCDX	UDL56	31.10	108.76	35.47	72.94	10.86			20.35	21.09		
		First 4-Wire 56Kbps Digital Grade Local Loop in Combination - Zone 2		2	UNCDX	UDL56	40.61	108.76	35.47	72.94	10.86			20.35	21.09		
		First 4-Wire 56Kbps Digital Grade Local Loop in Combination - Zone 3		3	UNCDX	UDL56	53.11	108.76	35.47	72.94	10.86			20.35	21.09		
		First Interoffice Transport - Dedicated - DS1 combination - Per Mile Per Month			UNC1X	1L5XX	0.3562										
		First Interoffice Transport - Dedicated - DS1 - combination Facility Termination Per Month			UNC1X	U1TF1	77.86	171.24	113.12	70.07	30.90			20.35	21.09		
		Per each 1/0 Channel System in combination Per Month			UNC1X	MQ1	80.77	105.76	14.48	3.04	2.74						
		Per each OCU-DP COCI (data) COCI per month (2.4-64kbs)			UNCDX	1D1DD	0.91	5.70	4.42								
		3/1 Channel System in combination per month			UNC3X	MQ3	222.98	156.02	49.41	17.12	6.77			36.84	36.84		
		Per each DS1 COCI in combination per month			UNC1X	UC1D1	17.58	5.70	4.42								
		Additional 4-Wire 56Kbps Digital Grade Loop in same DS1 Interoffice Transport Combination - Zone 1		1	UNCDX	UDL56	31.10	108.76	35.47	72.94	10.86			20.35	21.09		
		Additional 4-Wire 56Kbps Digital Grade Loop in same DS1 Interoffice Transport Combination - Zone 2		2	UNCDX	UDL56	40.61	108.76	35.47	72.94	10.86			20.35	21.09		
		Additional 4-Wire 56Kbps Digital Grade Loop in same DS1 Interoffice Transport Combination - Zone 3		3	UNCDX	UDL56	53.11	108.76	35.47	72.94	10.86			20.35	21.09		
		OCU-DP COCI (data) COCI in combination per month (2.4-64kbs)			UNCDX	1D1DD	0.91	5.70	4.42								
		Each Additional DS1 Interoffice Channel per mile in same 3/1 Channel System per month			UNC1X	1L5XX	0.3562										
		Each Additional DS1 Interoffice Channel Facility Termination in same 3/1 Channel System per month			UNC1X	U1TF1	77.86	171.24	113.12	70.07	30.90			20.35	21.09		
		Each Additional DS1 COCI in the same 3/1 channel system combination per month			UNC1X	UC1D1	17.58	5.70	4.42								
		Nonrecurring Currently Combined Network Elements Switch -As-Is Charge			UNC1X	UNCCC		52.73	24.62	9.12	9.12			20.35	21.09		
	EXTENDED 4-WIRE 64 KBPS DIGITAL LOOP WITH DEDICATED DS1 INTEROFFICE TRANSPORT w/ 3/1 MUX																
		First 4-Wire 64Kbps Digital Grade Loop in a DS1 Interoffice Transport Combination - Zone 1		1	UNCDX	UDL64	31.10	108.76	35.47	72.94	10.86			20.35	21.09		
		First 4-Wire 64Kbps Digital Grade Loop in a DS1 Interoffice Transport Combination - Zone 2		2	UNCDX	UDL64	40.61	108.76	35.47	72.94	10.86			20.35	21.09		
		First 4-Wire 64Kbps Digital Grade Loop in a DS1 Interoffice Transport Combination - Zone 3		3	UNCDX	UDL64	53.11	108.76	35.47	72.94	10.86			20.35	21.09		
		First Interoffice Transport - Dedicated - DS1 combination - Per Mile Per Month			UNC1X	1L5XX	0.3562										
		First Interoffice Transport - Dedicated - DS1 combination - Facility Termination Per Month			UNC1X	U1TF1	77.86	171.24	113.12	70.07	30.90			20.35	21.09		
		Per each Channel System 1/0 in combination Per Month			UNC1X	MQ1	80.77	105.76	14.48	3.04	2.74						
		Per each OCU-DP COCI (data) in combination - per month (2.4-64kbs)			UNCDX	1D1DD	0.91	5.70	4.42								
		3/1 Channel System in combination per month			UNC3X	MQ3	222.98	156.02	49.41	17.12	6.77			36.84	36.84		

UNBUNDLED NETWORK ELEMENTS - Tennessee														Attachment: 1		Table 1	
CATEGORY		RATE ELEMENTS	Interim	Zone	BCS	USOC	RATES ($)					Svc Order Submitted Elec per LSR	Svc Order Submitted Manually per LSR	Incremental Charge - Manual Svc Order vs. Electronic-1st	Incremental Charge - Manual Svc Order vs. Electronic-Add'l	Incremental Charge - Manual Svc Order vs. Electronic-Disc 1st	Incremental Charge - Manual Svc Order vs. Electronic-Disc Add'l
							Rec	Nonrecurring		Nonrecurring Disconnect		OSS Rates ($)					
								First	Add'l	First	Add'l	SOMEC	SOMAN	SOMAN	SOMAN	SOMAN	SOMAN
		Per each DS1 COCI in combination per month			UNC1X	UC1D1	17.58	5.70	4.42								
		Additional 4-Wire 64Kbps Digital Grade Loop in same DS1 Interoffice Transport Combination - Zone 1		1	UNCDX	UDL64	31.10	108.76	35.47	72.94	10.86			20.35	21.09		
		Additional 4-Wire 64Kbps Digital Grade Loop in same DS1 Interoffice Transport Combination - Zone 2		2	UNCDX	UDL64	40.61	108.76	35.47	72.94	10.86			20.35	21.09		
		Additional 4-Wire 64Kbps Digital Grade Loop in same DS1 Interoffice Transport Combination - Zone 3		3	UNCDX	UDL64	53.11	108.76	35.47	72.94	10.86			20.35	21.09		
		Additional OCU-DP COCI (data) - DS1 to DS0 Channel System combination - per month (2.4-64kbs)			UNCDX	1D1DD	0.91	5.70	4.42								
		Each Additional DS1 Interoffice Channel per mile in same 3/1 Channel System per month			UNC1X	1L5XX	0.3562										
		Each Additional DS1 Interoffice Channel Facility Termination in same 3/1 Channel System per month			UNC1X	U1TF1	77.86	171.24	113.12	70.07	30.90			20.35	21.09		
		Each Additional DS1 COCI in the same 3/1 channel system combination per month			UNC1X	UC1D1	17.58	5.70	4.42								
		Nonrecurring Currently Combined Network Elements Switch -As-Is Charge			UNC1X	UNCCC		52.73	24.62	9.12	9.12			20.35	21.09		
	EXTENDED 2-WIRE ISDN LOOP WITH DS1 INTEROFFICE TRANSPORT w/ 3/1 MUX																
		First 2-Wire ISDN Loop in a DS1 Interoffice Combination Transport - Zone 1		1	UNCNX	U1L2X	22.22	108.76	35.47	72.94	10.86			20.35	21.09		
		First 2-Wire ISDN Loop in a DS1 Interoffice Combination Transport - Zone 2		2	UNCNX	U1L2X	29.02	108.76	35.47	72.94	10.86			20.35	21.09		
		First 2-Wire ISDN Loop in a DS1 Interoffice Combination Transport - Zone 3		3	UNCNX	U1L2X	37.95	108.76	35.47	72.94	10.86			20.35	21.09		
		First Interoffice Transport - Dedicated - DS1 combination - Per Mile per month			UNC1X	1L5XX	0.3562										
		First Interoffice Transport - Dedicated - DS1 combination - Facility Termination per month			UNC1X	U1TF1	77.86	171.24	113.12	70.07	30.90			20.35	21.09		
		Per each Channel System 1/0 in combination - per month			UNC1X	MQ1	80.77	105.76	14.48	3.04	2.74						
		Per each 2-wire ISDN COCI (BRITE) in combination - per month			UNCNX	UC1CA	3.24	5.70	4.42								
		3/1 Channel System in combination per month			UNC3X	MQ3	222.98	156.02	49.41	17.12	6.77			36.84	36.84		
		Per each DS1 COCI in combination per month			UNC1X	UC1D1	17.58	5.70	4.42								
		Additional 2-wire ISDN Loop in same DS1Interoffice Transport Combination - Zone 1		1	UNCNX	U1L2X	22.22	108.76	35.47	72.94	10.86			20.35	21.09		
		Additional 2-wire ISDN Loop in same DS1Interoffice Transport Combination - Zone 2		2	UNCNX	U1L2X	29.02	108.76	35.47	72.94	10.86			20.35	21.09		
		Additional 2-wire ISDN Loop in same DS1Interoffice Transport Combination - Zone 3		3	UNCNX	U1L2X	37.95	108.76	35.47	72.94	10.86			20.35	21.09		
		Additional 2-wire ISDN COCI (BRITE) in same 1/0 channel system combination- per month			UNCNX	UC1CA	3.24	5.70	4.42								
		Each Additional DS1 Interoffice Channel per mile in same 3/1 Channel System per month			UNC1X	1L5XX	0.3562										
		Each Additional DS1 Interoffice Channel Facility Termination in same 3/1 Channel System per month			UNC1X	U1TF1	77.86	171.24	113.12	70.07	30.90			20.35	21.09		
		Each Additional DS1 COCI in the same 3/1 channel system combination per month			UNC1X	UC1D1	17.58	5.70	4.42								
		Nonrecurring Currently Combined Network Elements Switch -As-Is Charge			UNC1X	UNCCC		52.73	24.62	9.12	9.12			20.35	21.09		
	EXTENDED 4-WIRE DS1 LOOP WITH DEDICATED DS1 INTEROFFICE TRANSPORT w/ 3/1 MUX																
		First 4-wire DS1 Digital Lcoal Loop in Combination - Zone 1		1	UNC1X	USLXX	57.73	228.40	161.74	79.87	24.88						
		First 4-wire DS1 Digital Lcoal Loop in Combination - Zone 2		2	UNC1X	USLXX	75.40	228.40	161.74	79.87	24.88						
		First 4-wire DS1 Digital Lcoal Loop in Combination - Zone 3		3	UNC1X	USLXX	98.59	228.40	161.74	79.87	24.88						
		First Interoffice Transport - Dedicated - DS1 combination - Per Mile Per Month			UNC1X	1L5XX	0.3562										
		First Interoffice Transport - Dedicated - DS1 combination - Facility Termination Per Month			UNC1X	U1TF1	77.86	171.24	113.12	70.07	30.90			20.35	21.09		
		3/1 Channel System in combination per month			UNC3X	MQ3	222.98	156.02	49.41	17.12	6.77			36.84	36.84		
		Per each DS1 COCI combination per month			UNC1X	UC1D1	17.58	5.70	4.42								

UNBUNDLED NETWORK ELEMENTS - Tennessee														Attachment: 1		Table 1	
CATEGORY	RATE ELEMENTS	Interim	Zone	BCS	USOC	RATES ($)					Svc Order Submitted Elec per LSR	Svc Order Submitted Manually per LSR	Incremental Charge - Manual Svc Order vs. Electronic-1st	Incremental Charge - Manual Svc Order vs. Electronic-Add'l	Incremental Charge - Manual Svc Order vs. Electronic-Disc 1st	Incremental Charge - Manual Svc Order vs. Electronic-Disc Add'l
						Rec	Nonrecurring		Nonrecurring Disconnect		OSS Rates ($)					
							First	Add'l	First	Add'l	SOMEC	SOMAN	SOMAN	SOMAN	SOMAN	SOMAN
	Each Additional DS1 Interoffice Channel per mile in same 3/1 Channel System per month			UNC1X	1L5XX	0.3562										
	Each Additional DS1 Interoffice Channel Facility Termination in same 3/1 Channel System per month			UNC1X	U1TF1	77.86	171.24	113.12	70.07	30.90			20.35	21.09		
	Each Additional DS1 COCI in the same 3/1 channel system combination per month			UNC1X	UC1D1	17.58	5.70	4.42								
	Additional 4-Wire DS1 Digital Local Loop in Combination - Zone 1		1	UNC1X	USLXX	57.73	228.40	161.74	79.87	24.88						
	Additional 4-Wire DS1 Digital Local Loop in Combination - Zone 2		2	UNC1X	USLXX	75.40	228.40	161.74	79.87	24.88						
	Additional 4-Wire DS1 Digital Local Loop in Combination - Zone 3		3	UNC1X	USLXX	98.59	228.40	161.74	79.87	24.88						
	Nonrecurring Currently Combined Network Elements Switch -As-Is Charge			UNC1X	UNCCC		52.73	24.62	9.12	9.12			20.35	21.09		
EXTENDED 4-WIRE 56 KBPS DIGITAL EXTENDED LOOP WITH DS0 INTEROFFICE TRANSPORT																
	First 4-wire 56 kbps Local Loop in combination - Zone 1		1	UNCDX	UDL56	31.10	108.76	35.47	72.94	10.86						
	First 4-wire 56 kbps Local Loop in combination - Zone 2		2	UNCDX	UDL56	40.61	108.76	35.47	72.94	10.86						
	First 4-wire 56 kbps Local Loop in combination - Zone 3		3	UNCDX	UDL56	53.11	108.76	35.47	72.94	10.86						
	First 4-wiree 56 kbps Interoffice Transport - Dedicated - Per Mile per month			UNCDX	1L5XX	0.0174										
	First 4-wire 56 kbps Interoffice Transport - Dedicated - Facility Termination per month			UNCDX	U1TD5	21.19	79.83	44.08	69.32	31.00			20.35	21.09		
	Nonrecurring Currently Combined Network Elements Switch -As-Is Charge			UNCDX	UNCCC		52.73	24.62	9.12	9.12			20.35	21.09		
EXTENDED 4-WIRE 64 KBPS DIGITAL EXTENDED LOOP WITH DS0 INTEROFFICE TRANSPORT																
	First 4-wire 64 kbps Local Loop in combination - Zone 1		1	UNCDX	UDL64	31.10	108.76	35.47	72.94	10.86						
	First 4-wire 64 kbps Local Loop in combination - Zone 2		2	UNCDX	UDL64	40.61	108.76	35.47	72.94	10.86						
	First 4-wire 64 kbps Local Loop in combination - Zone 3		3	UNCDX	UDL64	53.11	108.76	35.47	72.94	10.86						
	First I4-wire 65 kbps Interoffice Transport - Dedicated - Per Mile per month			UNCDX	1L5XX	0.0174										
	First 4-wire 64 kbps Interoffice Transport - Dedicated - Facility Termination per month			UNCDX	U1TD6	21.19	79.83	44.08	69.32	31.00			20.35	21.09		
	Nonrecurring Currently Combined Network Elements Switch -As-Is Charge			UNCDX	UNCCC		52.73	24.62	9.12	9.12			20.35	10.54		
ADDITIONAL NETWORK ELEMENTS																
	When used as a part of a currently combined facility, the non-recurrng charges do not apply, but a Switch As Is charge does apply.															
	When used as ordinarily combined network elements in All States, the non-recurring charges apply and the Switch As Is Charge does not.															
	Nonrecurring Currently Combined Network Elements "Switch As Is" Charge (One applies to each combination)															
	Nonrecurring Currently Combined Network Elements Switch -As-Is Charge - 2 wire/4-Wire VG			UNCVX	UNCCC		52.73	24.62	9.12	9.12			53.73	24.62		
	Nonrecurring Currently Combined Network Elements Switch -As-Is Charge - 56/64 kbps			UNCDX	UNCCC		52.73	24.62	9.12	9.12			20.35	10.54		
	Nonrecurring Currently Combined Network Elements Switch -As-Is Charge - DS1			UNC1X	UNCCC		52.73	24.62	9.12	9.12			53.73	24.62		
	Nonrecurring Currently Combined Network Elements Switch -As-Is Charge - DS3			UNC3X	UNCCC		52.73	24.62	9.12	9.12			53.73	24.62		
	Nonrecurring Currently Combined Network Elements Switch -As-Is Charge - STS1			UNCSX	UNCCC		52.73	24.62	9.12	9.12			53.73	24.62		
	Optional Features & Functions:															
	Clear Channel Capability Extended Frame Option - per DS1	I		U1TD1, ULDD1,UNC1X	CCOEF		0I	0I	0I	0I						
	Clear Channel Capability Super FrameOption - per DS1	i		U1TD1, ULDD1,UNC1X	CCOSF		0I	0I	0I	0I						
	Clear Channel Capability (SF/ESF) Option - Subsequent Activity - per DS1	I		ULDD1, U1TD1, UNC1X, USL	NRCCC		185.16S	23.85S	2.03S	0.79S			45.68	1.76		
	C-bit Parity Option - Subsequent Activity - per DS3	i		U1TD3, ULDD3, UE3, UNC3X	NRCC3		219.46S	7.68S	.7637S	0S			45.68	1.76		
MULTIPLEXERS																
	DS1 to DS0 Channel System per month			UNC1X	MQ1	80.77	105.76	14.48	3.04	2.74			20.35	9.80		

UNBUNDLED NETWORK ELEMENTS - Tennessee														Attachment: 1		Table 1	
CATEGORY		RATE ELEMENTS	Interim	Zone	BCS	USOC	RATES ($)					Svc Order Submitted Elec per LSR	Svc Order Submitted Manually per LSR	Incremental Charge - Manual Svc Order vs. Electronic-1st	Incremental Charge - Manual Svc Order vs. Electronic-Add'l	Incremental Charge - Manual Svc Order vs. Electronic-Disc 1st	Incremental Charge - Manual Svc Order vs. Electronic-Disc Add'l
							Rec	Nonrecurring		Nonrecurring Disconnect		OSS Rates ($)					
								First	Add'l	First	Add'l	SOMEC	SOMAN	SOMAN	SOMAN	SOMAN	SOMAN
		OCU-DP COCI (data) - DS1 to DS0 Channel System - per month (2.4-64kbs) used for a Local Loop			UDL	1D1DD	1.82	6.07	4.66						9.80		
		OCU-DP COCI (data) - DS1 to DS0 Channel System - per month (2.4-64kbs) used for connection to a channelized DS1 Local Channel in the same SWC as collocation			U1TUD	1D1DD	1.82	6.07	4.66								
		2-wire ISDN COCI (BRITE) - DS1 to DS0 Channel Systsem - per month for a Local Loop			UDN	UC1CA	3.10	6.07	4.66								
		2-wire ISDN COCI (BRITE) - DS1 to DS0 Channel Systsem - per month used for connection to a channelized DS1 Local Channel in the same SWC as collocation			U1TUB	UC1CA	3.10	6.07	4.66								
		Voice Grade COCI - DS1 to DS0 Channel System - per month used for a Local Loop			UEA	1D1VG	0.91	6.07	4.66								
		Voice Grade COCI - DS1 to DS0 Channel System - per month used for connection to a channelized DS1 Local Channel in the same SWC as collocation			U1TUC	1D1VG	0.91	6.07	4.66								
		DS3 to DS1 Channel System per month			UNC3X	MQ3	222.98	156.02	49.41	17.12	6.77			20.35	9.80		
		STS-1 to DS1 Channel System per month			UNCSX	MQ3	222.98	156.02	49.41	17.12	6.77			20.35	9.80		
		DS1 COCI used with Loop per month			USL	UC1D1	17.58	6.07	4.66								
		DS1 COCI (used for connection to a channelized DS1 Local Channel in the same SWC as collocation) per month			U1TUA	UC1D1	17.58	6.07	4.66								
		DS1 COCI used with Interoffice Channel per month			U1TD1	UC1D1	17.58	6.07	4.66								
		DS3 Interface Unit (DS1 COCI) used with Local Channel per month			ULDD1	UC1D1	17.58	6.07	4.66								
UNBUNDLED LOCAL EXCHANGE SWITCHING(PORTS)																	
	Exchange Ports																
	NOTE: Although the Port Rate includes all available features in GA, KY, LA & TN, the desired features will need to be ordered using retail USOCs																
	2-WIRE VOICE GRADE LINE PORT RATES (RES)																
		Exchange Ports - 2-Wire Analog Line Port- Res.			UEPSR	UEPRL	1.89	9.93	9.19	3.66	2.92			20.35	10.54	13.32	1.40
		Exchange Ports - 2-Wire Analog Line Port with Caller ID - Res.			UEPSR	UEPRC	1.89	9.93	9.19	3.66	2.92			20.35	10.54	13.32	1.40
		Exchange Ports - 2-Wire Analog Line Port outgoing only - Res.			UEPSR	UEPRO	1.89	9.93	9.19	3.66	2.92			20.35	10.54	13.32	1.40
		Exchange Ports - 2-Wire VG unbundled TN extended local dialing parity Port with Caller ID - Res.			UEPSR	UEPAQ	1.89	9.93	9.19	3.66	2.92			20.35	10.54	13.32	1.40
		Exchange Ports - 2-Wire VG unbundled Tennessee Area Plus with Caller ID - Res (AC7)			UEPSR	UEPAH	1.89	9.93	9.19	3.66	2.92			20.35	10.54	13.32	1.40
		Exchange Ports - 2-Wire VG unbundled Tennessee Area Calling port with Caller ID - Res (F2R)			UEPSR	UEPAK	1.89	9.93	9.19	3.66	2.92			20.35	10.54	13.32	1.40
		Exchange Ports - 2-Wire VG unbundled Tennessee Area Calling port with Caller ID - Res (TACER)			UEPSR	UEPAL	1.89	9.93	9.19	3.66	2.92			20.35	10.54	13.32	1.40
		Exchange Ports - 2-Wire VG unbundled Tennessee Area Calling port with Caller ID - Res (TACSR)			UEPSR	UEPAM	1.89	9.93	9.19	3.66	2.92			20.35	10.54	13.32	1.40
		Exchange Ports - 2-Wire VG unbundled Tennessee Area Calling port with Caller ID - Res (1MF2X)			UEPSR	UEPAN	1.89	9.93	9.19	3.66	2.92			20.35	10.54	13.32	1.40
		Exchange Ports - 2-Wire VG unbundled Tennessee Area Calling port with Caller ID - Res (2MR)			UEPSR	UEPAO	1.89	9.93	9.19	3.66	2.92			20.35	10.54	13.32	1.40
		Exchange Ports - 2-Wire VG unbundled res, low usage line port with Caller ID (LUM)			UEPSR	UEPAP	1.89	9.93	9.19	3.66	2.92			20.35	10.54	13.32	1.40
		Exchange Port - 2-Wire VG Tennessee Residence Dialing Plan without Caller ID			UEPSR	UEPWN	1.89	9.93	9.19	3.66	2.92			20.35	10.54	13.32	1.40
		Exchange Port - 2-Wire VG Tennessee Residence Area Plus without Caller ID			UEPSR	UEPRR	1.89	9.93	9.19	3.66	2.92			20.35	10.54	13.32	1.40
		2-Wire voice unbundled Low Usage Line Port without Caller ID Capability			UEPSR	UEPRT	1.89	9.93	9.19	3.66	2.92			20.35	10.54	13.32	1.40
		Subsequent Activity			UEPSR	USASC	0.00	0.00	0.00					20.35	10.54	13.32	1.40
	FEATURES																
		All Available Vertical Features			UEPSR	UEPVF	0.00	0.00	0.00					20.35	10.54	13.32	1.40
	2-WIRE VOICE GRADE LINE PORT RATES (BUS)																

UNBUNDLED NETWORK ELEMENTS - Tennessee														Attachment: 1		Table 1	
CATEGORY		RATE ELEMENTS	Interim	Zone	BCS	USOC	RATES ($)					Svc Order Submitted Elec per LSR	Svc Order Submitted Manually per LSR	Incremental Charge - Manual Svc Order vs. Electronic-1st	Incremental Charge - Manual Svc Order vs. Electronic-Add'l	Incremental Charge - Manual Svc Order vs. Electronic-Disc 1st	Incremental Charge - Manual Svc Order vs. Electronic-Disc Add'l
							Rec	Nonrecurring		Nonrecurring Disconnect		OSS Rates ($)					
								First	Add'l	First	Add'l	SOMEC	SOMAN	SOMAN	SOMAN	SOMAN	SOMAN
		Exchange Ports - 2-Wire Analog Line Port without Caller ID - Bus			UEPSB	UEPBL	1.89	9.93	9.19	3.66	2.92			20.35	10.54	13.32	1.40
		Exchange Ports - 2-Wire VG unbundled Line Port with unbundled port with Caller+E484 ID - Bus.			UEPSB	UEPBC	1.89	9.93	9.19	3.66	2.92			20.35	10.54	13.32	1.40
		Exchange Ports - 2-Wire Analog Line Port outgoing only - Bus.			UEPSB	UEPBO	1.89	9.93	9.19	3.66	2.92			20.35	10.54	13.32	1.40
		Exchange Ports - 2-Wire VG unbundled TN extended local dialing parity Port with Caller ID - Bus.			UEPSB	UEPAV	1.89	9.93	9.19	3.66	2.92			20.35	10.54	13.32	1.40
		Exhange Ports - 2-Wire VG unbundled incoming only port with Caller ID - Bus			UEPSB	UEPB1	1.89	9.93	9.19	3.66	2.92			20.35	10.54	13.32	1.40
		Exchange Ports - 2-Wire VG unbundled TN Bus 2-Way Area Calling Port Economy Option - Bus (TACC1)			UEPSB	UEPAC	1.89	9.93	9.19	3.66	2.92			20.35	10.54	13.32	1.40
		Exchange Ports - 2-Wire VG unbundled TN Bus 2-Way Area Calling Port Standard Option - Bus (TACC2)			UEPSB	UEPAD	1.89	9.93	9.19	3.66	2.92			20.35	10.54	13.32	1.40
		Exchange Ports - 2-W VG unbundled TN Bus 2-Way Collierville & Memphis Local Calling Port - Bus (B2F)			UEPSB	UEPAE	1.89	9.93	9.19	3.66	2.92			20.35	10.54	13.32	1.40
		Exchange Ports - 2-W VG unbundled TN Bus 2-Way Collierville & Memphis Local Calling Port			UEPSB	UEPB2	1.89	9.93	9.19	3.66	2.92			20.35	10.54	13.32	1.40
		Exchange Ports - 2-W VG unbundled TN, Business Line Inward, Collierville & Memphis Local Calling Plan			UEPSB	UEPB3	1.89	9.93	9.19	3.66	2.92			20.35	10.54	13.32	1.40
		Exchange Ports - 2-Wire Voice Tennessee Business Dialing Plan without Caller ID			UEPSB	UEPWO	1.89	9.93	9.19	3.66	2.92			20.35	10.54	13.32	1.40
		2-Wire voice unbundled Incoming Only Port without Caller ID Capability			UEPSB	UEPBE	1.89	9.93	9.19	3.66	2.92			20.35	10.54	13.32	1.40
		Subsequent Activity			UEPSB	USASC	0.00	0.00	0.00					20.35	10.54	13.32	1.40
	FEATURES																
		All Available Vertical Features			UEPSB	UEPVF	0.00	0.00	0.00					20.35	10.54	13.32	1.40
	EXCHANGE PORT RATES (DID & PBX)																
		2-Wire VG Unbundled 2-Way PBX Trunk - Res			UEPSE	UEPRD	1.79	9.93	9.19	3.66	2.92			20.35	10.54	13.32	1.40
		2-Wire VG Line Side Unbundled 2-Way PBX Trunk - Bus			UEPSP	UEPPC	1.79	9.93	9.19	3.66	2.92			20.35	10.54	13.32	1.40
		2-Wire VG Line Side Unbundled Outward PBX Trunk - Bus			UEPSP	UEPPO	1.79	9.93	9.19	3.66	2.92			20.35	10.54	13.32	1.40
		2-Wire VG Line Side Unbundled Incoming PBX Trunk - Bus			UEPSP	UEPP1	1.79	9.93	9.19	3.66	2.92			20.35	10.54	13.32	1.40
		2-Wire Analog Long Distance Terminal PBX Trunk - Bus			UEPSP	UEPLD	1.79	9.93	9.19	3.66	2.92			20.35	10.54	13.32	1.40
		2-Wire Analog TN 2-Way Calling Plan PBX Trunk - Bus			UEPSP	UEPT2	1.79	9.93	9.19	3.66	2.92			20.35	10.54	13.32	1.40
		2-Wire TN Outward Calling Plan PBX Trunk - Bus			UEPSP	UEPTO	1.79	9.93	9.19	3.66	2.92			20.35	10.54	13.32	1.40
		2-Wire Voice Unbundled PBX LD Terminal Ports			UEPSP	UEPLD	1.79	9.93	9.19	3.66	2.92			20.35	10.54	13.32	1.40
		2-Wire Voice Unbundled 2-Way PBX Tennessee Calling Port			UEPSP	UEPT2	1.79	9.93	9.19	3.66	2.92			20.35	10.54	13.32	1.40
		2-Wire Voice Unbundled 1-Way Outgoing PBX Tennessee Calling Port			UEPSP	UEPTO	1.79	9.93	9.19	3.66	2.92			20.35	10.54	13.32	1.40
		2-Wire Vice Unbundled 2-Way PBX Usage Port			UEPSP	UEPXA	1.79	9.93	9.19	3.66	2.92			20.35	10.54	13.32	1.40
		2-Wire Voice Unbundled PBX Toll Terminal Hotel Ports			UEPSP	UEPXB	1.79	9.93	9.19	3.66	2.92			20.35	10.54	13.32	1.40
		2-Wire Voice Unbundled PBX LD DDD Terminals Port			UEPSP	UEPXC	1.79	9.93	9.19	3.66	2.92			20.35	10.54	13.32	1.40
		2-Wire Voice Unbundled PBX LD Terminal Switchboard Port			UEPSP	UEPXD	1.79	9.93	9.19	3.66	2.92			20.35	10.54	13.32	1.40
		2-Wire Voice Unbundled PBX LD Terminal Switchboard IDD Capable Port			UEPSP	UEPXE	1.79	9.93	9.19	3.66	2.92			20.35	10.54	13.32	1.40
		2-Wire Voice Unbundled 2-Way PBX Hotel/Hospital Economy Administrative Calling Port			UEPSP	UEPXL	1.79	9.93	9.19	3.66	2.92			20.35	10.54	13.32	1.40
		2-Wire Voice Unbundled 2-Way PBX Hotel/Hospital Economy Room Calling Port			UEPSP	UEPXM	1.79	9.93	9.19	3.66	2.92			20.35	10.54	13.32	1.40
		2-W Voice Unbundled 1-Way Out PBX Hotel/Hospital Economy Administrative Calling Port TN Calling Port			UEPSP	UEPXN	1.79	9.93	9.19	3.66	2.92			20.35	10.54	13.32	1.40
		2-Wire Voice Unbundled 1-Way Outgoing PBX Hotel/Hospital Discount Room Calling Port			UEPSP	UEPXO	1.79	9.93	9.19	3.66	2.92			20.35	10.54	13.32	1.40
		Unbundled Exchange Ports, PBX Trunk Combination, Collierville and Memphis Local Calling Plan			UEPSP	UEPA6	1.79	9.93	9.19	3.66	2.92			20.35	10.54	13.32	1.40
		Unbundled Exchange Ports, PBX Trunk Combination, first trunk, Collierville and Memphis Local Calling Plan			UEPSP	UEPA7	1.79	9.93	9.19	3.66	2.92			20.35	10.54	13.32	1.40
		2-Wire Voice Unbundled 1-Way Outgoing PBX Measured Port			UEPSP	UEPXS	1.79	9.93	9.19	3.66	2.92			20.35	10.54	13.32	1.40

UNBUNDLED NETWORK ELEMENTS - Tennessee														Attachment: 1		Table 1	
CATEGORY	RATE ELEMENTS	Interim	Zone	BCS	USOC	RATES ($)					Svc Order Submitted Elec per LSR	Svc Order Submitted Manually per LSR	Incremental Charge - Manual Svc Order vs. Electronic-1st	Incremental Charge - Manual Svc Order vs. Electronic-Add'l	Incremental Charge - Manual Svc Order vs. Electronic-Disc 1st	Incremental Charge - Manual Svc Order vs. Electronic-Disc Add'l
						Rec	Nonrecurring		Nonrecurring Disconnect		OSS Rates ($)					
							First	Add'l	First	Add'l	SOMEC	SOMAN	SOMAN	SOMAN	SOMAN	SOMAN
	2-Wire Voice Unbundled PBX Collierville and Memphis Calling Port			UEPSP	UEPXU	1.79	9.93	9.19	3.66	2.92			20.35	10.54	13.32	1.40
	2-Wire Voice Unbundled 2-Way PBX Tennessee RegionServ Calling Port			UEPSP	UEPXV	1.79	9.93	9.19	3.66	2.92			20.35	10.54	13.32	1.40
	Subsequent Activity			UEPSP	USASC	0.00	0.00	0.00					20.35	10.54	13.32	1.40
FEATURES																
	All Available Vertical Features			UEPSP UEPSE	UEPVF	0.00	0.00	0.00					20.35	10.54	13.32	1.40
EXCHANGE PORT RATES (COIN)																
	Exchange Ports - Coin Port					2.11	9.93	9.19	3.66	2.92			20.35	10.54	13.32	1.40
NOTE: Transmission/usage charges associated with POTS circuit switched usage will also apply to circuit switched voice and/or circuit switched data transmission by B-Channels associated with 2-wire ISDN ports.																
NOTE: Access to B Channel or D Channel Packet capabilities will be available only through BFR/New Business Request Process. Rates for the packet capabilities will be determined via the Bona Fide Request/New Business Request Process.																
UNBUNDLED LOCAL EXCHANGE SWITCHING(PORTS)																
EXCHANGE PORT RATES																
The DS1 Port rates below for 4-Wire DDITS Trunk Port and 4-Wire ISDN Port in this rate exhibit apply to the embedded base in place as of 10/2/03 until 4/1/04. After 4/1/04 these rates shall revert to tariff rates or a separate agreement.																
Requests for 4-Wire DDITS Trunk Ports with 4-Wire ISDN DS1 Ports after the effective date of this amendment shall be provided pursuant to a separate agreement or tariff at BellSouth's discretion.																
	Exchange Ports - 2-Wire DID Port			UEPEX	UEPP2	8.97	47.75	47.01	9.21	8.47			20.35	10.54	13.32	1.40
	Exchange Ports - DDITS Port - 4-Wire DS1 Port with DID capability (E:4/1/2004)			UEPDD	UEPDD	35.74	75.93	38.15	8.77	8.04			20.35	10.54	13.32	1.40
	Exchange Ports - 2-Wire ISDN Port (See Notes below.)			UEPTX, UEPSX	U1PMA	16.26	30.23	29.49	4.10	4.10			20.35	10.54	13.32	1.40
	All Features Offered			UEPTX, UEPSX	UEPVF	0.00	0.00	0.00								
	Exchange Ports - 2-Wire ISDN Port -- Channel Profiles			UEPTX, UEPSX	U1UMA	0.00	0.00	0.00								
NOTE: Transmission/usage charges associated with POTS circuit switched usage will also apply to circuit switched voice and/or circuit switched data transmission by B-Channels associated with 2-wire ISDN ports.																
NOTE: Access to B Channel or D Channel Packet capabilities will be available only through BFR/New Business Request Process. Rates for the packet capabilities will be determined via the Bona Fide Request/New Business Request Process.																
EXCHANGE PORT RATES (continued)																
	Exchange Ports - 4-Wire ISDN DS1 Port with Detailed E911 Locator Capability (E:4/1/2004)			UEPEX	UEPEX	75.04	148.66	147.18	38.46	36.98			20.35	10.54	13.32	1.40
	Exchange Ports - 4-Wire ISDN DS1 Port (E:4/1/2004)			UEPDX	UEPDX	75.04	148.66	147.18	38.46	36.98			20.35	10.54		
	Physical Collocation - DS1 Cross-Connects			UEPEX UEPDX	PE1P1	1.51	53.27	40.16								
	Virtual collocation - Special Access & UNE, cross-connect per DS1			UEPEX UEPDX	CNC1X	1.32	32.22	17.76	10.46	8.75						
Detailed E911 with Locator Capability (required with UEPEX port)																
	Unbundled Exchange Ports, 4-Wire ISDN DS1 Port - E911 Locator Capability - Initial Profile Establishment per CLEC per State			UEPEX	UEP1A	0.00	1,699.00		147.00				20.35	10.54		
	Unbundled Exchange Ports, 4-Wire ISDN DS1 Port - E911 Locator Capability - Subsequent Profile Changes, Additions, Deletions			UEPEX	UEP1B	0.00	164.94						20.35	10.54		
New or Additional PRI Telephone Numbers																
	Unbundled Exchange Ports, 4-Wire ISDN DS1 Port - E911 Locator Capability 2-way Telephone Numbers, per number in E911 profile [New or Additional]			UEPEX	UEP1C	0.0755	0.94						20.35	10.54		
	Unbundled Exchange Ports, 4-Wire ISDN DS1 Port - E911 Locator Capability - Outdial Telephone Numbers, per number in E911 profile [New or Additional]			UEPEX	UEP1D	0.0755	22.36	22.36					20.35	10.54		
	Unbundled Exchange Ports, 4-Wire ISDN DS1 Port - Inward Telephone Numbers - Inward Data Only Option [New or Additional]			UEPDX	UEP1E	0.00	0.94						20.35	10.54		
	Exchange Ports - 4-Wire ISDN DS1 Port - Subsequent [New] Inward Tel Numbers [Customer Testing Purposes]			UEPEX	PR7ZT	0.00	44.71	44.70					20.35	10.54		
LOCAL NUMBER PORTABILITY																
	Local Number Portability (1 per port)			UEPEX UEPDX	LNPCN	1.75							20.35	10.54		
INTERFACE (Provsioning Only)																
	Voice/Data			UEPEX	PR71V	0.00	0.00	0.00					20.35	10.54		
	Digital Data			UEPEX	PR71D	0.00	0.00	0.00					20.35	10.54		
	Inward Data			UEPDX	PR71E	0.00	0.00	0.00					20.35	10.54		
New or Additional Channel																
	New or Additional - Voice/Data "B" Channel			UEPEX	PR7BV	0.00	28.39						20.35	10.54		
	New or Additional - Digital Data "B" Channel			UEPEX	PR7BF	0.00	29.11						20.35	10.54		
	New or Additional Inward Data "B" Channel			UEPDX	PR7BD	0.00	29.39						20.35	10.54		

UNBUNDLED NETWORK ELEMENTS - Tennessee														Attachment: 1		Table 1	
CATEGORY	RATE ELEMENTS	Interim	Zone	BCS	USOC	RATES ($)					Svc Order Submitted Elec per LSR	Svc Order Submitted Manually per LSR	Incremental Charge - Manual Svc Order vs. Electronic-1st	Incremental Charge - Manual Svc Order vs. Electronic-Add'l	Incremental Charge - Manual Svc Order vs. Electronic-Disc 1st	Incremental Charge - Manual Svc Order vs. Electronic-Disc Add'l
						Rec	Nonrecurring		Nonrecurring Disconnect		OSS Rates ($)					
							First	Add'l	First	Add'l	SOMEC	SOMAN	SOMAN	SOMAN	SOMAN	SOMAN
	New or Additional Useage Sensitive Voice Data "B" Channel			UEPEX	PR7BS	0.00	29.39						20.35	10.54		
	New or Additional Useage Sensitive Digital Data "B" Channel			UEPEX	PR7BU	0.00	29.39						20.35	10.54		
	New or Additional PRI "D" Channel			UEPEX	PR7EX	0.00	29.39						20.35	10.54		
CALL TYPES																
	Inward			UEPEX UEPDX	PR7C1	0.00	0.00	0.00								
	Outward			UEPEX	PR7CO	0.00	0.00	0.00								
	Two-way			UEPEX	PR7CC	0.00	0.00	0.00								
UNBUNDLED PORT with REMOTE CALL FORWARDING CAPABILITY																
UNBUNDLED REMOTE CALL FORWARDING SERVICE - RESIDENCE																
	Unbundled Remote Call Forwarding Service, Area Calling, Res			UEPVR	UERAC	1.89	9.93	9.19	3.66	2.92			20.35	10.54	13.32	1.40
	Unbundled Remote Call Forwarding Service, Local Calling - Res			UEPVR	UERLC	1.89	9.93	9.19	3.66	2.92			20.35	10.54	13.32	1.40
	Unbundled Remote Call Forwarding Service, InterLATA - Res			UEPVR	UERTE	1.89	9.93	9.19	3.66	2.92			20.35	10.54	13.32	1.40
	Unbundled Remote Call Forwarding Service, IntraLATA - Res			UEPVR	UERTR	1.89	9.93	9.19	3.66	2.92			20.35	10.54	13.32	1.40
Non-Recurring																
	Unbundled Remote Call Forwarding Service - Conversion - Switch-as-is			UEPVR	USAC2		1.03	0.29					20.35	10.54	13.32	1.40
	Unbundled Remote Call Forwarding Service - Conversion with allowed change (PIC and LPIC)			UEPVR	USACC		1.03	0.29								
UNBUNDLED REMOTE CALL FORWARDING - Bus																
	Unbundled Remote Call Forwarding Service, Area Calling - Bus			UEPVB	UERAC	1.89	9.93	9.19	3.66	2.92			20.35	10.54	13.32	1.40
	Unbundled Remote Call Forwarding Service, Local Calling - Bus			UEPVB	UERLC	1.89	9.93	9.19	3.66	2.92			20.35	10.54	13.32	1.40
	Unbundled Remote Call Forwarding Service, InterLATA - Bus			UEPVB	UERTE	1.89	9.93	9.19	3.66	2.92			20.35	10.54	13.32	1.40
	Unbundled Remote Call Forwarding Service, IntraLATA - Bus			UEPVB	UERTR	1.89	9.93	9.19	3.66	2.92			20.35	10.54	13.32	1.40
	Unbundled Remote Call Forwarding Service Expanded and Exception Local Calling			UEPVB	UERVJ	1.89	9.93	9.19	3.66	2.92			20.35	10.54	13.32	1.40
Non-Recurring																
	Unbundled Remote Call Forwarding Service - Conversion - Switch-as-is			UEPVB	USAC2		1.03	0.29					20.35	10.54	13.32	1.40
	Unbundled Remote Call Forwarding Service - Conversion with allowed change (PIC and LPIC)			UEPVB	USACC		1.03	0.29								
UNBUNDLED LOCAL SWITCHING, PORT USAGE																
End Office Switching (Port Usage)																
	End Office Switching Function, Per MOU					0.0008041										
Tandem Switching (Port Usage) (Local or Access Tandem)																
	Tandem Switching Function Per MOU					0.0009778										
	Tandem Switching Function Per MOU (Melded)					0.000380364										
Melded Factor: 38.90% of the Tandem Rate																
Common Transport																
	Common Transport - Per Mile, Per MOU					0.0000064										
	Common Transport - Facilities Termination Per MOU					0.0003871										
UNBUNDLED PORT/LOOP COMBINATIONS - COST BASED RATES																
Cost Based Rates are applied where BellSouth is required by FCC and/or State Commission rule to provide Unbundled Local Switching or Switch Ports.																
Features shall apply to the Unbundled Port/Loop Combination - Cost Based Rate section in the same manner as they are applied to the Stand-Alone Unbundled Port section of this Rate Exhibit.																
End Office and Tandem Switching Usage and Common Transport Usage rates in the Port section of this rate exhibit shall apply to all combinations of loop/port network elements except for UNE Coin Port/Loop Combinations.																
The first and additional Port nonrecurring charges apply to Not Currently Combined Combos. For Currently Combined Combos the nonrecurring charges shall be those identified in the Nonrecurring - Currently Combined sections.																
2-WIRE VOICE GRADE LOOP WITH 2-WIRE LINE PORT (RES)																
UNE Port/Loop Combination Rates																
	2-Wire VG Loop/Port Combo - Zone 1		1			14.18										
	2-Wire VG Loop/Port Combo - Zone 2		2			18.01										
	2-Wire VG Loop/Port Combo - Zone 3		3			23.02										
UNE Loop Rates																
	2-Wire Voice Grade Loop (SL1) - Zone 1		1	UEPRX	UEPLX	12.48										
	2-Wire Voice Grade Loop (SL1) - Zone 2		2	UEPRX	UEPLX	16.31										
	2-Wire Voice Grade Loop (SL1) - Zone 3		3	UEPRX	UEPLX	21.32										
2-Wire Voice Grade Line Port Rates (Res)																
	2-Wire voice unbundled port - residence			UEPRX	UEPRL	1.70	22.14	15.25	8.45	3.91		15.69				

UNBUNDLED NETWORK ELEMENTS - Tennessee														Attachment: 1		Table 1	
CATEGORY	RATE ELEMENTS	Interim	Zone	BCS	USOC	RATES ($)					Svc Order Submitted Elec per LSR	Svc Order Submitted Manually per LSR	Incremental Charge - Manual Svc Order vs. Electronic-1st	Incremental Charge - Manual Svc Order vs. Electronic-Add'l	Incremental Charge - Manual Svc Order vs. Electronic-Disc 1st	Incremental Charge - Manual Svc Order vs. Electronic-Disc Add'l
						Rec	Nonrecurring		Nonrecurring Disconnect				OSS Rates ($)			
							First	Add'l	First	Add'l	SOMEC	SOMAN	SOMAN	SOMAN	SOMAN	SOMAN
	2-Wire voice unbundled port with Caller ID - res			UEPRX	UEPRC	1.70	22.14	15.25	8.45	3.91		15.69				
	2-Wire voice unbundled port outgoing only - res			UEPRX	UEPRO	1.70	22.14	15.25	8.45	3.91		15.69				
	2-Wire voice Grade unbundled Tennessee extended local dialing parity port with Caller ID - res			UEPRX	UEPAQ	1.70	22.14	15.25	8.45	3.91		15.69				
	2-Wire voice unbundled Tennessee Area Plus with Caller ID - res (AC7)			UEPRX	UEPAH	1.70	22.14	15.25	8.45	3.91		15.69				
	2-Wire voice unbundled Tennessee Area Calling port with Caller ID - res (F2R)			UEPRX	UEPAK	1.70	22.14	15.25	8.45	3.91		15.69				
	2-Wire voice unbundled Tennessee Area Calling port with Caller ID - res (TACER)			UEPRX	UEPAL	1.70	22.14	15.25	8.45	3.91		15.69				
	2-Wire voice unbundled Tennessee Area Calling port with Caller ID - res (TACSR)			UEPRX	UEPAM	1.70	22.14	15.25	8.45	3.91		15.69				
	2-Wire voice unbundled Tennessee Area Calling port with Caller ID - res (1MF2X)			UEPRX	UEPAN	1.70	22.14	15.25	8.45	3.91		15.69				
	2-Wire voice unbundled Tennessee Area Calling port with Caller ID - res (2MR)			UEPRX	UEPAO	1.70	22.14	15.25	8.45	3.91		15.69				
	2-Wire voice unbundles res, low usage line port with Caller ID (LUM)			UEPRX	UEPAP	1.70	22.14	15.25	8.45	3.91		15.69				
	2-Wire Voice Unbundled Tennessee Residence Dialing Plan without Caller ID			UEPRX	UEPWN	1.70	22.14	15.25	8.45	3.91		15.69				
	2-Wire voice unbundled Tennessee Area Plus Port without Caller ID Capability			UEPRX	UEPRR	1.70	22.14	15.25	8.45	3.91		15.69				
	2-Wire voice unbundled Low Usage Line Port without Caller ID Capability			UEPRX	UEPRT	1.70	22.14	15.25	8.45	3.91		15.69				
FEATURES																
	All Features Offered			UEPRX	UEPVF	0.00	0.00	0.00				15.69				
LOCAL NUMBER PORTABILITY																
	Local Number Portability (1 per port)			UEPRX	LNPCX	0.35										
NONRECURRING CHARGES (NRCs) - CURRENTLY COMBINED																
	2-Wire Voice Grade Loop / Line Port Combination - Conversion - Switch-as-is			UEPRX	USAC2		1.03	0.29				15.69				
	2-Wire Voice Grade Loop / Line Port Combination - Conversion - Switch with change			UEPRX	USACC		1.03	0.29				15.69				
	2-Wire Voice Grade Loop / Line Port Combination - Conversion - Subsequent Database Update						0.76					15.69				
ADDITIONAL NRCs																
	2-Wire Voice Grade Loop/Line Port Combination - Subsequent Activity			UEPRX	USAS2	0.00	0.00	0.00				15.69				
	Unbundled Miscellaneous Rate Element, Tag Loop at End User Premise			UEPRX	URETL		8.33	0.83					20.35	10.54	13.32	13.32
OFF/ON PREMISES EXTENSION CHANNELS																
	2 Wire Analog Voice Grade Extension Loop – Non-Design		1	UEPRX	UEAEN	13.19	31.99	20.02	10.65	1.41			20.35	10.54	13.32	13.32
	2 Wire Analog Voice Grade Extension Loop – Non-Design		2	UEPRX	UEAEN	17.23	31.99	20.02	10.65	1.41			20.35	10.54	13.32	13.32
	2 Wire Analog Voice Grade Extension Loop – Non-Design		3	UEPRX	UEAEN	22.53	31.99	20.02	10.65	1.41			20.35	10.54	13.32	13.32
	2 Wire Analog Voice Grade Extension Loop – Design		1	UEPRX	UEAED	16.56	75.06	48.20	28.70	17.64			20.35	10.54	13.32	13.32
	2 Wire Analog Voice Grade Extension Loop – Design		2	UEPRX	UEAED	21.63	75.06	48.20	28.70	17.64			20.35	10.54	13.32	13.32
	2 Wire Analog Voice Grade Extension Loop – Design		3	UEPRX	UEAED	28.28	75.06	48.20	28.70	17.64			20.35	10.54	13.32	13.32
INTEROFFICE TRANSPORT																
	Interoffice Transport - Dedicated - 2 Wire Voice Grade - Facility Termination			UEPRX	U1TV2	18.58	55.39	17.37	27.96	3.51						
	Interoffice Transport - Dedicated - 2 Wire Voice Grade - Per Mile or Fraction Mile			UEPRX	U1TVM	0.0174	0.00	0.00								
2-WIRE VOICE GRADE LOOP WITH 2-WIRE LINE PORT (BUS)																
UNE Port/Loop Combination Rates																
	2-Wire VG Loop/Port Combo - Zone 1		1			14.18										
	2-Wire VG Loop/Port Combo - Zone 2		2			18.01										
	2-Wire VG Loop/Port Combo - Zone 3		3			23.02										
UNE Loop Rates																
	2-Wire Voice Grade Loop (SL1) - Zone 1		1	UEPBX	UEPLX	12.48										

UNBUNDLED NETWORK ELEMENTS - Tennessee														Attachment: 1		Table 1	
CATEGORY	RATE ELEMENTS	Interim	Zone	BCS	USOC	RATES ($)					Svc Order Submitted Elec per LSR	Svc Order Submitted Manually per LSR	Incremental Charge - Manual Svc Order vs. Electronic-1st	Incremental Charge - Manual Svc Order vs. Electronic-Add'l	Incremental Charge - Manual Svc Order vs. Electronic-Disc 1st	Incremental Charge - Manual Svc Order vs. Electronic-Disc Add'l
						Rec	Nonrecurring		Nonrecurring Disconnect		OSS Rates ($)					
							First	Add'l	First	Add'l	SOMEC	SOMAN	SOMAN	SOMAN	SOMAN	SOMAN
	2-Wire Voice Grade Loop (SL1) - Zone 2		2	UEPBX	UEPLX	16.31										
	2-Wire Voice Grade Loop (SL1) - Zone 3		3	UEPBX	UEPLX	21.32										
2-Wire Voice Grade Line Port (Bus)																
	2-Wire voice unbundled port without Caller ID - bus			UEPBX	UEPBL	1.70	22.14	15.25	8.45	3.91		15.69				
	2-Wire voice unbundled port with Caller + E484 ID - bus			UEPBX	UEPBC	1.70	22.14	15.25	8.45	3.91		15.69				
	2-Wire voice unbundled port outgoing only - bus			UEPBX	UEPBO	1.70	22.14	15.25	8.45	3.91		15.69				
	2-Wire voice Grade unbundled Tennessee extended local dialing parity port with Caller ID - bus			UEPBX	UEPAV	1.70	22.14	15.25	8.45	3.91		15.69				
	2-Wire voice unbundled incoming only port with Caller ID - Bus			UEPBX	UEPB1	1.70	22.14	15.25	8.45	3.91		15.69				
	2-Wire voice unbundled Tennessee Bus 2-Way Area Calling Port Economy Option (TACC1)			UEPBX	UEPAC	1.70	22.14	15.25	8.45	3.91		15.69				
	2-Wire voice unbundled Tennessee Bus 2-Way Area Calling Port Standard Option (TACC2)			UEPBX	UEPAD	1.70	22.14	15.25	8.45	3.91		15.69				
	2-Wire voice unbundled Tennessee Bus 2-Way Collierville and Memphis Local Calling Port (B2F)			UEPBX	UEPAE	1.70	22.14	15.25	8.45	3.91		15.69				
	2-Wire Voice Unbundled Tennessee Business Dialing Plan without Caller ID			UEPBX	UEPWO	1.70	22.14	15.25	8.45	3.91		15.69				
	Tennessee Inward Collierville and Memphis Local Calling Plan (BUS)			UEPBX	UEPB2	1.70	22.14	15.25	8.45	3.91		15.69				
	Tennessee 2-Way Collierville and Memphis Local Calling Plan (BUS)			UEPBX	UEPB3	1.70	22.14	15.25	8.45	3.91		15.69				
	2-Wire voice unbundled Incoming Only Port without Caller ID Capability			UEPBX	UEPBE	1.70	22.14	15.25	8.45	3.91		15.69				
LOCAL NUMBER PORTABILITY																
	Local Number Portability (1 per port)			UEPBX	LNPCX	0.35										
FEATURES																
	All Features Offered			UEPBX	UEPVF	0.00	0.00	0.00				15.69				
NONRECURRING CHARGES (NRCs) - CURRENTLY COMBINED																
	2-Wire Voice Grade Loop / Line Port Combination - Conversion - Switch-as-is			UEPBX	USAC2		1.03	0.29				15.69				
	2-Wire Voice Grade Loop / Line Port Combination - Conversion - Switch with change			UEPBX	USACC		1.03	0.29				15.69				
	2-Wire Voice Grade Loop / Line Port Combination - Conversion - Subsequent Database Update						0.76					15.69				
ADDITIONAL NRCs																
	2-Wire Voice Grade Loop/Line Port Combination - Subsequent Activity			UEPBX	USAS2	0.00	0.00	0.00				15.69				
	Unbundled Miscellaneous Rate Element, Tag Loop at End User Premise			UEPBX	URETL		8.33	0.83					20.35	10.54	13.32	13.32
OFF/ON PREMISES EXTENSION CHANNELS																
	2 Wire Analog Voice Grade Extension Loop – Non-Design		1	UEPBX	UEAEN	13.19	31.99	20.02	10.65	1.41			20.35	10.54	13.32	13.32
	2 Wire Analog Voice Grade Extension Loop – Non-Design		2	UEPBX	UEAEN	17.23	31.99	20.02	10.65	1.41			20.35	10.54	13.32	13.32
	2 Wire Analog Voice Grade Extension Loop – Non-Design		3	UEPBX	UEAEN	22.53	31.99	20.02	10.65	1.41			20.35	10.54	13.32	13.32
	2 Wire Analog Voice Grade Extension Loop – Design		1	UEPBX	UEAED	16.56	75.06	48.20	28.70	17.64			20.35	10.54	13.32	13.32
	2 Wire Analog Voice Grade Extension Loop – Design		2	UEPBX	UEAED	21.63	75.06	48.20	28.70	17.64			20.35	10.54	13.32	13.32
	2 Wire Analog Voice Grade Extension Loop – Design		3	UEPBX	UEAED	28.28	75.06	48.20	28.70	17.64			20.35	10.54	13.32	13.32
INTEROFFICE TRANSPORT																
	Interoffice Transport - Dedicated - 2 Wire Voice Grade - Facility Termination			UEPBX	U1TV2	18.58	55.39	17.37	27.96	3.51						
	Interoffice Transport - Dedicated - 2 Wire Voice Grade - Per Mile or Fraction Mile			UEPBX	U1TVM	0.0174	0.00	0.00								
2-WIRE VOICE GRADE LOOP WITH 2-WIRE LINE PORT (RES - PBX)																
UNE Port/Loop Combination Rates																
	2-Wire VG Loop/Port Combo - Zone 1		1			14.18										
	2-Wire VG Loop/Port Combo - Zone 2		2			18.01										
	2-Wire VG Loop/Port Combo - Zone 3		3			23.02										
	2-Wire Voice Grade Loop (SL 1) - Zone 1		1	UEPRG	UEPLX	12.48										
	2-Wire Voice Grade Loop (SL 1) - Zone 2		2	UEPRG	UEPLX	16.31										
	2-Wire Voice Grade Loop (SL 1) - Zone 3		3	UEPRG	UEPLX	21.32										

UNBUNDLED NETWORK ELEMENTS - Tennessee														Attachment: 1		Table 1	
CATEGORY		RATE ELEMENTS	Interim	Zone	BCS	USOC	RATES ($)					Svc Order Submitted Elec per LSR	Svc Order Submitted Manually per LSR	Incremental Charge - Manual Svc Order vs. Electronic-1st	Incremental Charge - Manual Svc Order vs. Electronic-Add'l	Incremental Charge - Manual Svc Order vs. Electronic-Disc 1st	Incremental Charge - Manual Svc Order vs. Electronic-Disc Add'l
							Rec	Nonrecurring		Nonrecurring Disconnect		OSS Rates ($)					
								First	Add'l	First	Add'l	SOMEC	SOMAN	SOMAN	SOMAN	SOMAN	SOMAN
	2-Wire Voice Grade Line Port Rates (RES - PBX)																
		2-Wire VG Unbundled Combination 2-Way PBX Trunk Port - Res			UEPRG	UEPRD	1.70	22.14	15.25	8.45	3.91		15.69				
	LOCAL NUMBER PORTABILITY																
		Local Number Portability (1 per port)			UEPRG	LNPCP	3.15	0.00	0.00				15.69				
	FEATURES																
		All Features Offered			UEPRG	UEPVF	0.00	0.00	0.00				15.69				
	NONRECURRING CHARGES (NRCs) - CURRENTLY COMBINED																
		2-Wire Voice Grade Loop/ Line Port Combination (PBX) - Conversion - Switch-As-Is			UEPRG	USAC2		1.03	0.29				15.69				
		2-Wire Voice Grade Loop/ Line Port Combination (PBX) - Conversion - Switch with Change			UEPRG	USACC		1.03	0.29				15.69				
		2-Wire Voice Grade Loop / Line Port Combination - Conversion - Subsequent Database Update						0.76					15.69				
	ADDITIONAL NRCs																
		2-Wire Voice Grade Loop/ Line Port Combination (PBX) - Subsequent Activity			UEPRG	USAS2	0.00	0.00	0.00				15.69				
		PBX Subsequent Activity - Change/Rearrange Multiline Hunt Group						14.64	14.64				15.69				
		Unbundled Miscellaneous Rate Element, Tag Loop at End User Premise			UEPRG	URETL		8.33	0.83					20.35	10.54	13.32	13.32
	OFF/ON PREMISES EXTENSION CHANNELS																
		Local Channel Voice grade, per termination		1	UEPRG	P2JHX	16.56	75.06	48.20	28.70	17.64			20.35	10.54	13.32	13.32
		Local Channel Voice grade, per termination		2	UEPRG	P2JHX	21.63	75.06	48.20	28.70	17.64			20.35	10.54	13.32	13.32
		Local Channel Voice grade, per termination		3	UEPRG	P2JHX	28.28	75.06	48.20	28.70	17.64			20.35	10.54	13.32	13.32
		Non-Wire Direct Serve Channel Voice Grade		SW	UEPRG	SDD2X	10.02	148.84	112.34	73.14	36.65			20.35	10.54	13.32	13.32
	INTEROFFICE TRANSPORT																
		Interoffice Transport - Dedicated - 2 Wire Voice Grade - Facility Termination			UEPRG	U1TV2	18.58	55.39	17.37	27.96	3.51						
		Interoffice Transport - Dedicated - 2 Wire Voice Grade - Per Mile or Fraction Mile			UEPRG	U1TVM	0.0174	0.00	0.00								
	2-WIRE VOICE GRADE LOOP WITH 2-WIRE LINE PORT (BUS - PBX)																
	UNE Port/Loop Combination Rates																
		2-Wire VG Loop/Port Combo - Zone 1		1			14.18										
		2-Wire VG Loop/Port Combo - Zone 2		2			18.01										
		2-Wire VG Loop/Port Combo - Zone 3		3			23.02										
	UNE Loop Rates																
		2-Wire Voice Grade Loop (SL 1) - Zone 1		1	UEPPX	UEPLX	12.48										
		2-Wire Voice Grade Loop (SL 1) - Zone 2		2	UEPPX	UEPLX	16.31										
		2-Wire Voice Grade Loop (SL 1) - Zone 3		3	UEPPX	UEPLX	21.32										
	2-Wire Voice Grade Line Port Rates (BUS - PBX)																
		Line Side Unbundled Combination 2-Way PBX Trunk Port - Bus			UEPPX	UEPPC	1.70	22.14	15.25	8.45	3.91		15.69				
		Line Side Unbundled Outward PBX Trunk Port - Bus			UEPPX	UEPPO	1.70	22.14	15.25	8.45	3.91		15.69				
		Line Side Unbundled Incoming PBX Trunk Port - Bus			UEPPX	UEPP1	1.70	22.14	15.25	8.45	3.91		15.69				
		2-Wire Voice Unbundled PBX LD Terminal Ports			UEPPX	UEPLD	1.70	22.14	15.25	8.45	3.91		15.69				
		2-Wire Voice Unbundled 2-Way Combination PBX Tennessee Calling Port			UEPPX	UEPT2	1.70	22.14	15.25	8.45	3.91		15.69				
		2-Wire Voice Unbundled 1-Way Outgoing PBX Tennessee Calling Port			UEPPX	UEPTO	1.70	22.14	15.25	8.45	3.91		15.69				
		2-Wire Voice Unbundled 2-Way Combination PBX Usage Port			UEPPX	UEPXA	1.70	22.14	15.25	8.45	3.91		15.69				
		2-Wire Voice Unbundled PBX Toll Terminal Hotel Ports			UEPPX	UEPXB	1.70	22.14	15.25	8.45	3.91		15.69				
		2-Wire Voice Unbundled PBX LD DDD Terminals Port			UEPPX	UEPXC	1.70	22.14	15.25	8.45	3.91		15.69				
		2-Wire Voice Unbundled PBX LD Terminal Switchboard Port			UEPPX	UEPXD	1.70	22.14	15.25	8.45	3.91		15.69				
		2-Wire Voice Unbundled PBX LD Terminal Switchboard IDD Capable Port			UEPPX	UEPXE	1.70	22.14	15.25	8.45	3.91		15.69				
		2-Wire Voice Unbundled 2-Way PBX Hotel/Hospital Economy Administrative Calling Port			UEPPX	UEPXL	1.70	22.14	15.25	8.45	3.91		15.69				

UNBUNDLED NETWORK ELEMENTS - Tennessee														Attachment: 1		Table 1	
CATEGORY	RATE ELEMENTS	Interim	Zone	BCS	USOC	RATES ($)					Svc Order Submitted Elec per LSR	Svc Order Submitted Manually per LSR	Incremental Charge - Manual Svc Order vs. Electronic-1st	Incremental Charge - Manual Svc Order vs. Electronic-Add'l	Incremental Charge - Manual Svc Order vs. Electronic-Disc 1st	Incremental Charge - Manual Svc Order vs. Electronic-Disc Add'l
						Rec	Nonrecurring		Nonrecurring Disconnect				OSS Rates ($)			
							First	Add'l	First	Add'l	SOMEC	SOMAN	SOMAN	SOMAN	SOMAN	SOMAN
	2-Wire Voice Unbundled 2-Way PBX Hotel/Hospital Economy Room Calling Port			UEPPX	UEPXM	1.70	22.14	15.25	8.45	3.91		15.69				
	2-Wire Voice Unbundled 1W Out PBX Hotel/Hospital Economy Administrative Calling Port TN Calling Port			UEPPX	UEPXN	1.70	22.14	15.25	8.45	3.91		15.69				
	2-Wire Voice Unbundled 1-Way Outgoing PBX Hotel/Hospital Discount Room Calling Port			UEPPX	UEPXO	1.70	22.14	15.25	8.45	3.91		15.69				
	2-Wire Voice Unbundled 1-Way Outgoing PBX Measured Port			UEPPX	UEPXS	1.70	22.14	15.25	8.45	3.91		15.69				
	2-Wire Voice Unbundled PBX Collierville and Memphis Calling Port			UEPPX	UEPXU	1.70	22.14	15.25	8.45	3.91		15.69				
	2-Wire Voice Unbundled 2-Way PBX Tennessee RegionServ Callling Port			UEPPX	UEPXV	1.70	22.14	15.25	8.45	3.91		15.69				
	Tennessee PBX 2-Way Combo Each Additional Trunk Collierville and Memphis Local Calling Plan			UEPPX	UEPA6	1.70	22.14	15.25	8.45	3.91		15.69				
	Tennessee PBX 2-Way Combo First Trunk Collierville and Memphis Local Calling Plan			UEPPX	UEPA7	1.70	22.14	15.25	8.45	3.91		15.69				
LOCAL NUMBER PORTABILITY																
	Local Number Portability (1 per port)			UEPPX	LNPCP	3.15	0.00	0.00				15.69				
FEATURES																
	All Features Offered			UEPPX	UEPVF	0.00	0.00	0.00				15.69				
NONRECURRING CHARGES (NRCs) - CURRENTLY COMBINED																
	2-Wire Voice Grade Loop/ Line Port Combination (PBX) - Conversion - Switch-As-Is			UEPPX	USAC2		1.03	0.29				15.69				
	2-Wire Voice Grade Loop/ Line Port Combination (PBX) - Conversion - Switch with Change			UEPPX	USACC		1.03	0.29				15.69				
	2-Wire Voice Grade Loop / Line Port Combination - Conversion - Subsequent Database Update						0.76					15.69				
ADDITIONAL NRCs																
	2-Wire Voice Grade Loop/ Line Port Combination (PBX) - Subsequent Activity			UEPPX	USAS2	0.00	0.00	0.00				15.69				
	PBX Subsequent Activity - Change/Rearrange Multiline Hunt Group						14.64	14.64				15.69				
	Unbundled Miscellaneous Rate Element, Tag Loop at End User Premise			UEPPX	URETL		8.33	0.83					20.35	10.54	13.32	13.32
OFF/ON PREMISES EXTENSION CHANNELS																
	Local Channel Voice grade, per termination		1	UEPPX	P2JHX	16.56	75.06	48.20	28.70	17.64			20.35	10.54	13.32	13.32
	Local Channel Voice grade, per termination		2	UEPPX	P2JHX	21.63	75.06	48.20	28.70	17.64			20.35	10.54	13.32	13.32
	Local Channel Voice grade, per termination		3	UEPPX	P2JHX	28.28	75.06	48.20	28.70	17.64			20.35	10.54	13.32	13.32
	Non-Wire Direct Serve Channel Voice Grade		SW	UEPPX	SDD2X	10.02	148.84	112.34	73.14	36.65			20.35	10.54	13.32	13.32
INTEROFFICE TRANSPORT																
	Interoffice Transport - Dedicated - 2 Wire Voice Grade - Facility Termination			UEPPX	U1TV2	18.58	55.39	17.37	27.96	3.51						
	Interoffice Transport - Dedicated - 2 Wire Voice Grade - Per Mile or Fraction Mile			UEPPX	U1TVM	0.0174	0.00	0.00								
UNE Port/Loop Combination Rates																
	2-Wire VG Coin Port/Loop Combo – Zone 1		1			14.18										
	2-Wire VG Coin Port/Loop Combo – Zone 2		2			18.01										
	2-Wire VG Coin Port/Loop Combo – Zone 3		3			23.02										
UNE Loop Rates																
	2-Wire Voice Grade Loop (SL1) - Zone 1		1	UEPCO	UEPLX	12.48										
	2-Wire Voice Grade Loop (SL1) - Zone 2		2	UEPCO	UEPLX	16.31										
	2-Wire Voice Grade Loop (SL1) - Zone 3		3	UEPCO	UEPLX	21.32										
2-Wire Voice Grade Line Ports (COIN)																
	2-Wire Coin 2-Way without Operator Screening and without Blocking (TN)			UEPCO	UEPTB	1.70	22.14	15.25	8.45	3.91		15.69				
	2-Wire Coin 2-Way with Operator Screening and Blocking: 011, 900/976, 1+DDD (NC, TN)			UEPCO	UEPRP	1.70	22.14	15.25	8.45	3.91		15.69				
	2-Wire Coin 2-Way with Operator Screening and 011 Blocking (TN)			UEPCO	UEPTA	1.70	22.14	15.25	8.45	3.91		15.69				

UNBUNDLED NETWORK ELEMENTS - Tennessee														Attachment: 1		Table 1	
CATEGORY	RATE ELEMENTS	Interim	Zone	BCS	USOC	RATES ($)					Svc Order Submitted Elec per LSR	Svc Order Submitted Manually per LSR	Incremental Charge - Manual Svc Order vs. Electronic-1st	Incremental Charge - Manual Svc Order vs. Electronic-Add'l	Incremental Charge - Manual Svc Order vs. Electronic-Disc 1st	Incremental Charge - Manual Svc Order vs. Electronic-Disc Add'l
						Rec	Nonrecurring		Nonrecurring Disconnect				OSS Rates ($)			
							First	Add'l	First	Add'l	SOMEC	SOMAN	SOMAN	SOMAN	SOMAN	SOMAN
	2-Wire Coin 2-Way with Operator Screening: 900 Blocking: 900/976, 1+DDD, 011+, and Local (NC, TN)			UEPCO	UEPCA	1.70	22.14	15.25	8.45	3.91		15.69				
	2-Wire Coin Outward with Operator Screening and 011 Blocking (TN)			UEPCO	UEPTC	1.70	22.14	15.25	8.45	3.91		15.69				
	2-Wire Coin Outward with Operator Screening and Blocking: 900/976, 1+DDD, 011+, and Local (TN)			UEPCO	UEPOT	1.70	22.14	15.25	8.45	3.91		15.69				
	2-Wire 2-Way Smartline with 900/976 (all states except LA)			UEPCO	UEPCK	1.88						15.69				
	2-Wire Coin Outward Smartline with 900/976 (all states except LA)			UEPCO	UEPCR	1.88						15.69				
ADDITIONAL UNE COIN PORT/LOOP (RC)																
	UNE Coin Port/Loop Combo Usage (Flat Rate)			UEPCO	URECU	3.45	0.00	0.00	0.00	0.00		15.69				
	Local Number Portability (1 per port)			UEPCO	LNPCX	0.35										
	2-Wire Voice Grade Loop / Line Port Combination - Conversion - Switch-as-is			UEPCO	USAC2		1.03	0.29				15.69				
	2-Wire Voice Grade Loop / Line Port Combination - Conversion - Switch with change			UEPCO	USACC		1.03	0.29				15.69				
	2-Wire Voice Grade Loop/Line Port Combination - Subsequent Activity			UEPCO	USAS2	0.00	0.00	0.00				15.69				
	Unbundled Miscellaneous Rate Element, Tag Loop at End User Premise			UEPCO	URETL		8.33	0.83					20.35	10.54	13.32	13.32
2-WIRE VOICE LOOP/ 2WIRE VOICE GRADE IO TRANSPORT/ 2-WIRE LINE PORT (RES)																
UNE Port/Loop Combination Rates																
	2-Wire VG Loop/IO Tranport/Port Combo - Zone 1		1			18.45										
	2-Wire VG Loop/IO Tranport/Port Combo - Zone 2		2			23.52										
	2-Wire VG Loop/IO Tranport/Port Combo - Zone 3		3			30.17										
UNE Loop Rates																
	2-Wire Voice Grade Loop (SL2) - Zone 1		1	UEPFR	UECF2	16.56										
	2-Wire Voice Grade Loop (SL2) - Zone 2		2	UEPFR	UECF2	21.63										
	2-Wire Voice Grade Loop (SL2) - Zone 3		3	UEPFR	UECF2	28.28										
2-Wire Voice Grade Line Port Rates (Res)																
	2-Wire voice unbundled port - residence			UEPFR	UEPRL	1.89	84.99	57.39	32.36	20.56		15.69				
	2-Wire voice unbundled port with Caller ID - res			UEPFR	UEPRC	1.89	84.99	57.39	32.36	20.56		15.69				
	2-Wire voice unbundled port outgoing only - res			UEPFR	UEPRO	1.89	84.99	57.39	32.36	20.56		15.69				
	2-Wire voice Grade unbundled Tennessee extended local dialing parity port with Caller ID - res			UEPFR	UEPAQ	1.89	84.99	57.39	32.36	20.56		15.69				
	2-Wire voice unbundled Tennessee Area Plus with Caller ID - res (AC7)			UEPFR	UEPAH	1.89	84.99	57.39	32.36	20.56		15.69				
	2-Wire voice unbundled Tennessee Area Calling port with Caller ID - res (F2R)			UEPFR	UEPAK	1.89	84.99	57.39	32.36	20.56		15.69				
	2-Wire voice unbundled Tennessee Area Calling port with Caller ID - res (TACER)			UEPFR	UEPAL	1.89	84.99	57.39	32.36	20.56		15.69				
	2-Wire voice unbundled Tennessee Area Calling port with Caller ID - res (TACSR)			UEPFR	UEPAM	1.89	84.99	57.39	32.36	20.56		15.69				
	2-Wire voice unbundled Tennessee Area Calling port with Caller ID - res (1MF2X)			UEPFR	UEPAN	1.89	84.99	57.39	32.36	20.56		15.69				
	2-Wire voice unbundled Tennessee Area Calling port with Caller ID - res (2MR)			UEPFR	UEPAO	1.89	84.99	57.39	32.36	20.56		15.69				
	2-Wire voice unbundles res, low usage line port with Caller ID (LUM)			UEPFR	UEPAP	1.89	84.99	57.39	32.36	20.56		15.69				
	2-Wire Voice Unbundled Tennessee Residence Dialing Plan without Caller ID			UEPFR	UEPWN	1.89	84.99	57.39	32.36	20.56		15.69				
INTEROFFICE TRANSPORT																
	Interoffice Transport - Dedicated - 2 Wire Voice Grade - Facility Termination			UEPFR	U1TV2	18.58	55.39	17.37	27.96	3.51						
	Interoffice Transport - Dedicated - 2 Wire Voice Grade - Per Mile or Fraction Mile			UEPFR	1L5XX	0.0174										
FEATURES																
	All Features Offered			UEPFR	UEPVF	0.00	0.00	0.00				15.69				
LOCAL NUMBER PORTABILITY																

UNBUNDLED NETWORK ELEMENTS - Tennessee													Attachment: 1		Table 1	
CATEGORY	RATE ELEMENTS	Interim	Zone	BCS	USOC	RATES ($)					Svc Order Submitted Elec per LSR	Svc Order Submitted Manually per LSR	Incremental Charge - Manual Svc Order vs. Electronic-1st	Incremental Charge - Manual Svc Order vs. Electronic-Add'l	Incremental Charge - Manual Svc Order vs. Electronic-Disc 1st	Incremental Charge - Manual Svc Order vs. Electronic-Disc Add'l
						Rec	Nonrecurring		Nonrecurring Disconnect		OSS Rates ($)					
							First	Add'l	First	Add'l	SOMEC	SOMAN	SOMAN	SOMAN	SOMAN	SOMAN
	Local Number Portability (1 per port)			UEPFR	LNPCX	0.35										
NONRECURRING CHARGES (NRCs) - CURRENTLY COMBINED																
	2-Wire Loop / Dedicated IO Transport / 2 Wire Line Port Combination - Conversion - Switch-as-is			UEPFR	USAC2		16.94	3.72				15.69				
	2-Wire Loop / Dedicated IO Transport / 2 Wire Line Port Combination - Conversion - Switch-With-Change			UEPFR	USACC		16.94	3.72				15.69				
	Unbundled Miscellaneous Rate Element, Tag Designed Loop at End User Premise			UEPFR	URETN		11.23	1.10					20.35	10.54	13.32	13.32
2-WIRE VOICE LOOP/ 2WIRE VOICE GRADE IO TRANSPORT/ 2-WIRE LINE PORT (BUS)																
UNE Port/Loop Combination Rates																
	2-Wire VG Loop/IO Tranport/Port Combo - Zone 1		1			18.45										
	2-Wire VG Loop/IO Tranport/Port Combo - Zone 2		2			23.52										
	2-Wire VG Loop/IO Tranport/Port Combo - Zone 3		3			30.17										
UNE Loop Rates																
	2-Wire Voice Grade Loop (SL2) - Zone 1		1	UEPFB	UECF2	16.56										
	2-Wire Voice Grade Loop (SL2) - Zone 2		2	UEPFB	UECF2	21.63										
	2-Wire Voice Grade Loop (SL2) - Zone 3		3	UEPFB	UECF2	28.28										
2-Wire Voice Grade Line Port (Bus)																
	2-Wire voice unbundled port without Caller ID - bus			UEPFB	UEPBL	1.89	84.99	57.39	32.36	20.56		15.69				
	2-Wire voice unbundled port with Caller + E484 ID - bus			UEPFB	UEPBC	1.89	84.99	57.39	32.36	20.56		15.69				
	2-Wire voice unbundled port outgoing only - bus			UEPFB	UEPBO	1.89	84.99	57.39	32.36	20.56		15.69				
	2-Wire voice Grade unbundled Tennessee extended local dialing parity port with Caller ID - bus			UEPFB	UEPAV	1.89	84.99	57.39	32.36	20.56		15.69				
	2-Wire voice unbundled incoming only port with Caller ID - Bus			UEPFB	UEPB1	1.89	84.99	57.39	32.36	20.56		15.69				
	2-Wire voice unbundled Tennessee Bus 2-Way Area Calling Port Economy Option (TACC1)			UEPFB	UEPAC	1.89	84.99	57.39	32.36	20.56		15.69				
	2-Wire voice unbundled Tennessee Bus 2-Way Area Calling Port Standard Option (TACC2)			UEPFB	UEPAD	1.89	84.99	57.39	32.36	20.56		15.69				
	2-Wire voice unbundled Tennessee Bus 2-Way Collierville and Memphis Local Calling Port (B2F)			UEPFB	UEPAE	1.89	84.99	57.39	32.36	20.56		15.69				
	2-Wire Voice Unbundled Tennessee Business Dialing Plan without Caller ID			UEPFB	UEPWO	1.89	84.99	57.39	32.36	20.56		15.69				
	Tennessee Inward Collierville and Memphis Local Calling Plan (BUS)			UEPFB	UEPB2	1.89	84.99	57.39	32.36	20.56		15.69				
	Tennessee 2-Way Collierville and Memphis Local Calling Plan (BUS)			UEPFB	UEPB3	1.89	84.99	57.39	32.36	20.56		15.69				
LOCAL NUMBER PORTABILITY																
	Local Number Portability (1 per port)			UEPFB	LNPCX	0.35										
INTEROFFICE TRANSPORT																
	Interoffice Transport - Dedicated - 2 Wire Voice Grade - Facility Termination			UEPFB	U1TV2	18.58	55.39	17.37	27.96	3.51						
	Interoffice Transport - Dedicated - 2 Wire Voice Grade - Per Mile or Fraction Mile			UEPFB	1L5XX	0.0174										
FEATURES																
	All Features Offered			UEPFB	UEPVF	0.00	0.00	0.00				15.69				
NONRECURRING CHARGES (NRCs) - CURRENTLY COMBINED																
	2-Wire Loop / Dedicated IO Transport / 2 Wire Line Port Combination - Conversion - Switch-as-is			UEPFB	USAC2		16.94	3.72				15.69				
	2-Wire Loop / Dedicated IO Transport / 2 Wire Line Port Combination - Conversion - Switch with change			UEPFB	USACC		16.94	3.72				15.69				
	Unbundled Miscellaneous Rate Element, Tag Designed Loop at End User Premise			UEPFB	URETN		11.23	1.10					20.35	10.54	13.32	13.32
2-WIRE VOICE LOOP/ 2WIRE VOICE GRADE IO TRANSPORT/ 2-WIRE LINE PORT (PBX)																
UNE Port/Loop Combination Rates																
	2-Wire VG Loop/IO Tranport/Port Combo - Zone 1		1			18.45										
	2-Wire VG Loop/IO Tranport/Port Combo - Zone 2		2			23.52										
	2-Wire VG Loop/IO Tranport/Port Combo - Zone 3		3			30.17										
UNE Loop Rates																
	2-Wire Voice Grade Loop (SL2) - Zone 1		1	UEPFP	UECF2	16.56										

UNBUNDLED NETWORK ELEMENTS - Tennessee														Attachment: 1		Table 1	
CATEGORY	RATE ELEMENTS	Interim	Zone	BCS	USOC	RATES ($)					Svc Order Submitted Elec per LSR	Svc Order Submitted Manually per LSR	Incremental Charge - Manual Svc Order vs. Electronic-1st	Incremental Charge - Manual Svc Order vs. Electronic-Add'l	Incremental Charge - Manual Svc Order vs. Electronic-Disc 1st	Incremental Charge - Manual Svc Order vs. Electronic-Disc Add'l
						Rec	Nonrecurring		Nonrecurring Disconnect				OSS Rates ($)			
							First	Add'l	First	Add'l	SOMEC	SOMAN	SOMAN	SOMAN	SOMAN	SOMAN
	2-Wire Voice Grade Loop (SL2) - Zone 2		2	UEPFP	UECF2	21.63										
	2-Wire Voice Grade Loop (SL2) - Zone 3		3	UEPFP	UECF2	28.28										
2-Wire Voice Grade Line Port Rates (BUS - PBX)																
	Line Side Unbundled Combination 2-Way PBX Trunk Port - Bus			UEPFP	UEPPC	1.79	106.40	63.08	42.67	18.54		15.69				
	Line Side Unbundled Outward PBX Trunk Port - Bus			UEPFP	UEPPO	1.79	106.40	63.08	42.67	18.54		15.69				
	Line Side Unbundled Incoming PBX Trunk Port - Bus			UEPFP	UEPP1	1.79	106.40	63.08	42.67	18.54		15.69				
	2-Wire Voice Unbundled PBX LD Terminal Ports			UEPFP	UEPLD	1.79	106.40	63.08	42.67	18.54		15.69				
	2-Wire Voice Unbundled 2-Way Combination PBX Tennessee Calling Port			UEPFP	UEPT2	1.79	106.40	63.08	42.67	18.54		15.69				
	2-Wire Voice Unbundled 1-Way Outgoing PBX Tennessee Calling Port			UEPFP	UEPTO	1.79	106.40	63.08	42.67	18.54		15.69				
	2-Wire Voice Unbundled 2-Way Combination PBX Usage Port			UEPFP	UEPXA	1.79	106.40	63.08	42.67	18.54		15.69				
	2-Wire Voice Unbundled PBX Toll Terminal Hotel Ports			UEPFP	UEPXB	1.79	106.40	63.08	42.67	18.54		15.69				
	2-Wire Voice Unbundled PBX LD DDD Terminals Port			UEPFP	UEPXC	1.79	106.40	63.08	42.67	18.54		15.69				
	2-Wire Voice Unbundled PBX LD Terminal Switchboard Port			UEPFP	UEPXD	1.79	106.40	63.08	42.67	18.54		15.69				
	2-Wire Voice Unbundled PBX LD Terminal Switchboard IDD Capable Port			UEPFP	UEPXE	1.79	106.40	63.08	42.67	18.54		15.69				
	2-Wire Voice Unbundled 2-Way PBX Hotel/Hospital Economy Administrative Calling Port			UEPFP	UEPXL	1.79	106.40	63.08	42.67	18.54		15.69				
	2-Wire Voice Unbundled 2-Way PBX Hotel/Hospital Economy Room Calling Port			UEPFP	UEPXM	1.79	106.40	63.08	42.67	18.54		15.69				
	2-Wire Voice Unbundled 1W Out PBX Hotel/Hospital Economy Administrative Calling Port TN Calling Port			UEPFP	UEPXN	1.79	106.40	63.08	42.67	18.54		15.69				
	2-Wire Voice Unbundled 1-Way Outgoing PBX Hotel/Hospital Discount Room Calling Port			UEPFP	UEPXO	1.79	106.40	63.08	42.67	18.54		15.69				
	2-Wire Voice Unbundled 1-Way Outgoing PBX Measured Port			UEPFP	UEPXS	1.79	106.40	63.08	42.67	18.54		15.69				
	2-Wire Voice Unbundled PBX Collierville and Memphis Calling Port			UEPFP	UEPXU	1.79	106.40	63.08	42.67	18.54		15.69				
	2-Wire Voice Unbundled 2-Way PBX Tennessee RegionServ Callling Port			UEPFP	UEPXV	1.79	106.40	63.08	42.67	18.54		15.69				
LOCAL NUMBER PORTABILITY																
	Local Number Portability (1 per port)			UEPFP	LNPCP	3.15	0.00	0.00				15.69				
INTEROFFICE TRANSPORT																
	Interoffice Transport - Dedicated - 2 Wire Voice Grade - Facility Termination			UEPFP	U1TV2	18.58	55.39	17.37	27.96	3.51						
	Interoffice Transport - Dedicated - 2 Wire Voice Grade - Per Mile or Fraction Mile			UEPFP	1L5XX	0.0174										
FEATURES																
	All Features Offered			UEPFP	UEPVF	0.00	0.00	0.00				15.69				
NONRECURRING CHARGES (NRCs) - CURRENTLY COMBINED																
	2-Wire Loop / Dedicated IO Transport / 2 Wire Line Port Combination - Conversion - Switch-as-is			UEPFP	USAC2		16.94	3.72				15.69				
	2-Wire Loop / Dedicated IO Transport / 2 Wire Line Port Combination - Conversion - Switch with change			UEPFP	USACC		16.94	3.72				15.69				
	Unbundled Miscellaneous Rate Element, Tag Designed Loop at End User Premise			UEPFP	URETN		11.23	1.10					20.35	10.54	13.32	13.32
UNBUNDLED PORT/LOOP COMBINATIONS - COST BASED RATES																
2-WIRE VOICE GRADE LOOP- BUS ONLY - WITH 2-WIRE DID TRUNK PORT																
UNE Port/Loop Combination Rates																
	2-Wire VG Loop/2-Wire DID Trunk Port Combo - UNE Zone 1		1			18.38										
	2-Wire VG Loop/2-Wire DID Trunk Port Combo - UNE Zone 2		2			19.87										
	2-Wire VG Loop/2-Wire DID Trunk Port Combo - UNE Zone 3		3			24.78										
UNE Loop Rates																
	2-Wire Analog Voice Grade Loop - (SL2) - UNE Zone 1		1	UEPPX	UECD1	9.60										
	2-Wire Analog Voice Grade Loop - (SL2) - UNE Zone 2		2	UEPPX	UECD1	11.09										
	2-Wire Analog Voice Grade Loop - (SL2) - UNE Zone 3		3	UEPPX	UECD1	16.00										
UNE Port Rate																
	Exchange Ports - 2-Wire DID Port			UEPPX	UEPD1	8.78	45.44	29.94	8.45	3.91			30.89	7.03		

UNBUNDLED NETWORK ELEMENTS - Tennessee													Attachment: 1		Table 1	
CATEGORY	RATE ELEMENTS	Interim	Zone	BCS	USOC	RATES ($)					Svc Order Submitted Elec per LSR	Svc Order Submitted Manually per LSR	Incremental Charge - Manual Svc Order vs. Electronic-1st	Incremental Charge - Manual Svc Order vs. Electronic-Add'l	Incremental Charge - Manual Svc Order vs. Electronic-Disc 1st	Incremental Charge - Manual Svc Order vs. Electronic-Disc Add'l
						Rec	Nonrecurring		Nonrecurring Disconnect		OSS Rates ($)					
							First	Add'l	First	Add'l	SOMEC	SOMAN	SOMAN	SOMAN	SOMAN	SOMAN
	NONRECURRING CHARGES - CURRENTLY COMBINED															
	2-Wire Voice Grade Loop / 2-Wire DID Trunk Port Combination - Switch-as-is			UEPPX	USAC1		8.76	5.75					30.89	7.03		
	2-Wire Voice Grade Loop / 2-Wire DID Trunk Port Conversion with BellSouth Allowable Changes			UEPPX	USA1C		8.76	5.75					30.89	7.03		
	Unbundled Miscellaneous Rate Element, Tag Designed Loop at End User Premise			UEPPX	URETN		11.23	1.10								
	Telephone Number/Trunk Group Establisment Charges															
	DID Trunk Termination (One Per Port)			UEPPX	NDT	0.00	0.00	0.00								
	Additional DID Numbers for each Group of 20 DID Numbers			UEPPX	ND4	0.00	0.00	0.00								
	DID Numbers, Non- consecutive DID Numbers , Per Number			UEPPX	ND5	0.00	0.00	0.00								
	Reserve Non-Consecutive DID numbers			UEPPX	ND6	0.00	0.00	0.00								
	Reserve DID Numbers			UEPPX	NDV	0.00	0.00	0.00								
	LOCAL NUMBER PORTABILITY															
	Local Number Portability (1 per port)			UEPPX	LNPCP	3.15	0.00	0.00								
	2-WIRE ISDN DIGITAL GRADE LOOP WITH 2-WIRE ISDN DIGITAL LINE SIDE PORT															
	UNE Port/Loop Combination Rates															
	2W ISDN Digital Grade Loop/2W ISDN Digital Line Side Port - UNE Zone 1		1	UEPPB UEPPR		32.27										
	2W ISDN Digital Grade Loop/2W ISDN Digital Line Side Port - UNE Zone 2		2	UEPPB UEPPR		34.78										
	2W ISDN Digital Grade Loop/2W ISDN Digital Line Side Port - UNE Zone 3		3	UEPPB UEPPR		44.32										
	UNE Loop Rates															
	2-Wire ISDN Digital Grade Loop - UNE Zone 1		1	UEPPB UEPPR	USL2X	16.20										
	2-Wire ISDN Digital Grade Loop - UNE Zone 2		2	UEPPB UEPPR	USL2X	18.71										
	2-Wire ISDN Digital Grade Loop - UNE Zone 3		3	UEPPB UEPPR	USL2X	28.25										
	UNE Port Rate															
	Exchange Port - 2-Wire ISDN Line Side Port			UEPPB UEPPR	UEPPB	16.07	141.75	118.37	49.20	43.26			19.99	19.99		
	NONRECURRING CHARGES - CURRENTLY COMBINED															
	2-Wire ISDN Digital Grade Loop / 2-Wire ISDN Line Side Port Combination - Conversion			UEPPB UEPPR	USACB	0.00	117.23	117.23					19.99	19.99		
	ADDITIONAL NRCs															
	2-Wire ISDN Loop / 2-Wire ISDN Port Combination - Sub Actvy - Non Feature/Add Trunk			UEPPB UEPPR	USASB		212.88						19.99	19.99		
	Unbundled Miscellaneous Rate Element, Tag Designed Loop at End User Premise			UEPPB UEPPR	URETN		11.23	1.10								
	Unbundled Miscellaneous Rate Element, Tag Loop at End User Premise			UEPPB UEPPR	URETL		8.33	0.83								
	LOCAL NUMBER PORTABILITY															
	Local Number Portability (1 per port)			UEPPB UEPPR	LNPCX	0.35	0.00	0.00								
	B-CHANNEL USER PROFILE ACCESS:															
	CVS/CSD (DMS/5ESS)			UEPPB UEPPR	U1UCA	0.00	0.00	0.00								
	CVS (EWSD)			UEPPB UEPPR	U1UCB	0.00	0.00	0.00								
	CSD			UEPPB UEPPR	U1UCC	0.00	0.00	0.00								
	B-CHANNEL AREA PLUS USER PROFILE ACCESS: (AL,KY,LA,MS SC,MS, & TN)															
	CVS/CSD (DMS/5ESS)			UEPPB UEPPR	U1UCD	0.00	0.00	0.00								
	CVS (EWSD)			UEPPB UEPPR	U1UCE	0.00	0.00	0.00								
	CSD			UEPPB UEPPR	U1UCF	0.00	0.00	0.00								
	USER TERMINAL PROFILE															
	User Terminal Profile (EWSD only)			UEPPB UEPPR	U1UMA	0.00	0.00	0.00								
	VERTICAL FEATURES															
	All Vertical Features - One per Channel B User Profile			UEPPB UEPPR	UEPVF	0.00	0.00	0.00								
	INTEROFFICE CHANNEL MILEAGE															
	Interoffice Channel mileage each, including first mile and facilities termination			UEPPB UEPPR	M1GNC	17.91	53.99	17.37					19.99	19.99		
	Interoffice Channel mileage each, additional mile			UEPPB UEPPR	M1GNM	0.173	0.00	0.00								
	4-WIRE DS1 DIGITAL LOOP WITH 4-WIRE ISDN DS1 DIGITAL TRUNK PORT															

UNBUNDLED NETWORK ELEMENTS - Tennessee													Attachment: 1		Table 1	
CATEGORY	RATE ELEMENTS	Interim	Zone	BCS	USOC	RATES ($)					Svc Order Submitted Elec per LSR	Svc Order Submitted Manually per LSR	Incremental Charge - Manual Svc Order vs. Electronic-1st	Incremental Charge - Manual Svc Order vs. Electronic-Add'l	Incremental Charge - Manual Svc Order vs. Electronic-Disc 1st	Incremental Charge - Manual Svc Order vs. Electronic-Disc Add'l
						Rec	Nonrecurring		Nonrecurring Disconnect		OSS Rates ($)					
							First	Add'l	First	Add'l	SOMEC	SOMAN	SOMAN	SOMAN	SOMAN	SOMAN
The UNE-P DS1 combination rates below for in this rate exhibit apply to the embedded base in place as of 10/2/03 until 4/1/04. After 4/1/04 these rates shall revert to tariff rates or a separate commercial agreement.																
Requests for 4-Wire DS1 Digital Loop with 4-Wire ISDN DS1 Digital Trunk Port after the effective date of this amendment shall be provided pursuant to a separate agreement or tariff at BellSouth's discretion.																
UNE Port/Loop Combination Rates																
	4W DS1 Digital Loop/4W ISDN DS1 Digital Trunk Port - UNE Zone 1		1	UEPPP		132.58										
	4W DS1 Digital Loop/4W ISDN DS1 Digital Trunk Port - UNE Zone 2		2	UEPPP		150.25										
	4W DS1 Digital Loop/4W ISDN DS1 Digital Trunk Port - UNE Zone 3		3	UEPPP		173.44										
UNE Loop Rates																
	4-Wire DS1 Digital Loop - UNE Zone 1		1	UEPPP	USL4P	57.73										
	4-Wire DS1 Digital Loop - UNE Zone 2		2	UEPPP	USL4P	75.40										
	4-Wire DS1 Digital Loop - UNE Zone 3		3	UEPPP	USL4P	98.59										
UNE Port Rate																
	Exchange Ports - 4-Wire ISDN DS1 Port (E:4/1/2004)			UEPPP	UEPPP	74.85	415.53	366.90	89.28	77.43			19.99	19.99		
NONRECURRING CHARGES - CURRENTLY COMBINED																
	4-Wire DS1 Digital Loop / 4-Wire ISDN DS1 Digital Trunk Port Combination - Conversion -Switch-as-is (E:4/1/2004)			UEPPP	USACP	0.00	328.53	328.53					19.99	19.99		
ADDITIONAL NRCs																
	4-Wire DS1 Loop/4-W ISDN Digtl Trk Port - Subsqt Actvy-Inward/two way Tel Nos. (except NC)			UEPPP	PR7TF		0.94						19.99	19.99		
	4-Wire DS1 Loop / 4-Wire ISDN DS1 Digital Trunk Port - Outward Tel Numbers (All States except NC)			UEPPP	PR7TO		22.36	22.36					19.99	19.99		
	4-Wire DS1 Loop / 4-Wire ISDN DS1 Digital Trk Port - Subsequent Inward Tel Numbers			UEPPP	PR7ZT		44.71	44.70					19.99	19.99		
LOCAL NUMBER PORTABILITY																
	Local Number Portability (1 per port)			UEPPP	LNPCN	1.75										
INTERFACE (Provsioning Only)																
	Voice/Data			UEPPP	PR71V	0.00	0.00	0.00								
	Digital Data			UEPPP	PR71D	0.00	0.00	0.00								
	Inward Data			UEPPP	PR71E	0.00	0.00	0.00								
New or Additional "B" Channel																
	New or Additional - Voice/Data B Channel			UEPPP	PR7BV	0.00	28.39						19.99	19.99		
	New or Additional - Digital Data B Channel			UEPPP	PR7BF	0.00	29.11						19.99	19.99		
	New or Additional Inward Data B Channel			UEPPP	PR7BD	0.00	29.39						19.99	19.99		
CALL TYPES																
	Inward			UEPPP	PR7C1	0.00	0.00	0.00								
	Outward			UEPPP	PR7CO	0.00	0.00	0.00								
	Two-way			UEPPP	PR7CC	0.00	0.00	0.00								
Interoffice Channel Mileage																
	Fixed Each Including First Mile			UEPPP	1LN1A	76.1825	145.98	109.85	19.55				19.99	19.99		
	Each Airline-Fractional Additional Mile			UEPPP	1LN1B	0.3525										
4-WIRE DS1 DIGITAL LOOP WITH 4-WIRE DDITS TRUNK PORT																
The UNE-P DS1 combination rates below for in this rate exhibit apply to the embedded base in place as of 10/2/03 until 4/1/04. After 4/1/04 these rates shall revert to tariff rates or a separate commercial agreement.																
Requests for 4-Wire DS1 Digital Loop with 4-Wire DDITS after the effective date of this amendment shall be provided pursuant to a separate agreement or tariff at BellSouth's discretion.																
UNE Port/Loop Combination Rates																
	4W DS1 Digital Loop/4W DDITS Trunk Port - UNE Zone 1		1	UEPDC		93.28							19.99	19.99		
	4W DS1 Digital Loop/4W DDITS Trunk Port - UNE Zone 2		2	UEPDC		110.95							19.99	19.99		
	4W DS1 Digital Loop/4W DDITS Trunk Port - UNE Zone 3		3	UEPDC		134.14							19.99	19.99		
UNE Loop Rates																
	4-Wire DS1 Digital Loop - UNE Zone 1		1	UEPDC	USLDC	57.53										
	4-Wire DS1 Digital Loop - UNE Zone 2		2	UEPDC	USLDC	75.40										
	4-Wire DS1 Digital Loop - UNE Zone 3		3	UEPDC	USLDC	98.59										
UNE Port Rate																
	4-Wire DDITS Digital Trunk Port (E:4/1/2004)			UEPDC	UDD1T	35.55	342.80	257.87	61.41	48.49			19.99	19.99		
NONRECURRING CHARGES - CURRENTLY COMBINED																
	4-Wire DS1 Digital Loop / 4-Wire DDITS Trunk Port Combination - Switch-as-is (E:4/1/2004)			UEPDC	USAC4		312.91	312.91					19.99	19.99		

UNBUNDLED NETWORK ELEMENTS - Tennessee													Attachment: 1		Table 1	
CATEGORY	RATE ELEMENTS	Interim	Zone	BCS	USOC	RATES ($)					Svc Order Submitted Elec per LSR	Svc Order Submitted Manually per LSR	Incremental Charge - Manual Svc Order vs. Electronic-1st	Incremental Charge - Manual Svc Order vs. Electronic-Add'l	Incremental Charge - Manual Svc Order vs. Electronic-Disc 1st	Incremental Charge - Manual Svc Order vs. Electronic-Disc Add'l
						Rec	Nonrecurring		Nonrecurring Disconnect		OSS Rates ($)					
							First	Add'l	First	Add'l	SOMEC	SOMAN	SOMAN	SOMAN	SOMAN	SOMAN
	4-Wire DS1 Digital Loop / 4-Wire DDITS Trunk Port Combination - Conversion with DS1 Changes (E:4/1/2004)			UEPDC	USAWA		312.91	312.91					19.99	19.99		
	4-Wire DS1 Digital Loop / 4-Wire DDITS Trunk Port Combination - Conversion with Change - Trunk (E:4/1/2004)			UEPDC	USAWB		312.91	312.91					19.99	19.99		
ADDITIONAL NRCs																
	4-Wire DS1 Loop / 4-Wire DDITS Trunk Port - Subsequent Service Activity Per Service Order			UEPDC	USAS4		94.88	94.88								
	4-Wire DS1 Loop / 4-Wire DDITS Trunk Port - NRC - Subsequent Channel Activation/Chan - 2-Way Trunk			UEPDC	UDTTA		108.67	108.67					19.99	19.99		
	4-Wire DS1 Loop / 4-Wire DDITS Trunk Port - Subsequent Channel Activation/Chan - 1-Way Outward Trunk			UEPDC	UDTTB		108.67	108.67					19.99	19.99		
	4-Wire DS1 Loop / 4-Wire DDITS Trunk Port - Subsqnt Channel Activation/Chan Inward Trunk w/out DID			UEPDC	UDTTC		108.67	108.67					19.99	19.99		
	4-Wire DS1 Loop / 4-Wire DDITS Trunk Port - Subsqnt Chan Activation Per Chan - Inward Trunk with DID			UEPDC	UDTTD		108.67	108.67					19.99	19.99		
	4-Wire DS1 Loop / 4-Wire DDITS Trunk Port - Subsqnt Chan Activation / Chan - 2-Way DID w User Trans			UEPDC	UDTTE		108.67	108.67					19.99	19.99		
BIPOLAR 8 ZERO SUBSTITUTION																
	B8ZS -Superframe Format			UEPDC	CCOSF		0.00i	590.00s					19.99	19.99		
	B8ZS - Extended Superframe Format			UEPDC	CCOEF		0.00i	590.00s					19.99	19.99		
Alternate Mark Inversion																
	AMI -Superframe Format			UEPDC	MCOSF		0.00	0.00								
	AMI - Extended SuperFrame Format			UEPDC	MCOPO		0.00	0.00								
Telephone Number/Trunk Group Establisment Charges																
	Telephone Number for 2-Way Trunk Group			UEPDC	UDTGX	0.00							19.99	19.99		
	Telephone Number for 1-Way Outward Trunk Group			UEPDC	UDTGY	0.00							19.99	19.99		
	Telephone Number for 1-Way Inward Trunk Group Without DID			UEPDC	UDTGZ	0.00							19.99	19.99		
	DID Numbers for each Group of 20 DID Numbers			UEPDC	ND4	0.00							19.99	19.99		
	DID Numbers, Non- consecutive DID Numbers , Per Number			UEPDC	ND5	0.00							19.99	19.99		
	Reserve Non-Consecutive DID Nos.			UEPDC	ND6	0.00	0.00	0.00								
	Reserve DID Numbers			UEPDC	NDV	0.00	0.00	0.00								
Dedicated DS1 (Interoffice Channel Mileage) - FX/FCO for 4-Wire DS1 Digital Loop with 4-Wire DDITS Trunk Port																
	Interoffice Channel Mileage - Fixed rate 0-8 miles (Facilities Termination)			UEPDC	1LNO1	75.83	145.98	109.85	19.66	14.99						
	Interoffice Channel Mileage - Additional rate per mile - 0-8 miles			UEPDC	1LNOA	0.3525	0.00	0.00								
	Interoffice Channel Mileage - Fixed rate 9-25 miles (Facilities Termination)			UEPDC	1LNO2	0.00	0.00	0.00								
	Interoffice Channel Mileage - Additional rate per mile - 9-25 miles			UEPDC	1LNOB	0.3525	0.00	0.00								
	Interoffice Channel Mileage - Fixed rate 25+ miles (Facilities Termination)			UEPDC	1LNO3	0.00	0.00	0.00								
	Interoffice Channel Mileage - Additional rate per mile - 25+ miles			UEPDC	1LNOC	0.3525	0.00	0.00								
	Local Number Portability, per DS0 Activated			UEPDC	LNPCP	3.15	0.00	0.00								
	Central Office Termininating Point			UEPDC	CTG	0.00										
4-WIRE DS1 LOOP WITH CHANNELIZATION WITH PORT																
System is 1 DS1 Loop, 1 D4 Channel Bank, and up to 24 Feature Activations																
Each System can have up to 24 combinations of rates depending on type and number of ports used																
The UNE-P DS1 combination rates below for 4-Wire DS1 Loop with Channelization with Port in this rate exhibit apply to the embedded base in place as of 10/2/03 until 4/1/04. After 4/1/04 these rates shall revert to tariff rates or a separate agreement.																
Requests for 4-Wire DS1 Loop with Channelization with Port after the effective date of this amendment shall be provided pursuant to a separate agreement or tariff at BellSouth's discretion.																
UNE DS1 Loop																
	4-Wire DS1 Loop - UNE Zone 1		1	UEPMG	USLDC	57.73	0.00	0.00								
	4-Wire DS1 Loop - UNE Zone 2		2	UEPMG	USLDC	75.40	0.00	0.00								
	4-Wire DS1 Loop - UNE Zone 3		3	UEPMG	USLDC	98.59	0.00	0.00								
UNE DSO Channelization Capacities (D4 Channel Bank Configurations)																
	24 DSO Channel Capacity - 1 per DS1			UEPMG	VUM24	131.87	0.00	0.00					19.99	19.99		
	48 DSO Channel Capacity - 1 per 2 DS1s			UEPMG	VUM48	263.74	0.00	0.00					19.99	19.99		
	96 DSO Channel Capacity -1per 4 DS1s			UEPMG	VUM96	527.48	0.00	0.00					19.99	19.99		

UNBUNDLED NETWORK ELEMENTS - Tennessee													Attachment: 1		Table 1	
CATEGORY	RATE ELEMENTS	Interim	Zone	BCS	USOC	RATES ($)					Svc Order Submitted Elec per LSR	Svc Order Submitted Manually per LSR	Incremental Charge - Manual Svc Order vs. Electronic-1st	Incremental Charge - Manual Svc Order vs. Electronic-Add'l	Incremental Charge - Manual Svc Order vs. Electronic-Disc 1st	Incremental Charge - Manual Svc Order vs. Electronic-Disc Add'l
						Rec	Nonrecurring		Nonrecurring Disconnect		OSS Rates ($)					
							First	Add'l	First	Add'l	SOMEC	SOMAN	SOMAN	SOMAN	SOMAN	SOMAN
	144 DS0 Channel Capacity - 1 per 6 DS1s			UEPMG	VUM14	791.42	0.00	0.00					19.99	19.99		
	192 DS0 Channel Capacity -1 per 8 DS1s			UEPMG	VUM19	827.76	0.00	0.00					19.99	19.99		
	240 DS0 Channel Capacity - 1 per 10 DS1s			UEPMG	VUM2O	1,318.70	0.00	0.00					19.99	19.99		
	288 DS0 Channel Capacity - 1 per 12 DS1s			UEPMG	VUM28	1,582.44	0.00	0.00					19.99	19.99		
	384 DS0 Channel Capacity - 1 per 16 DS1s			UEPMG	VUM38	2,109.92	0.00	0.00					19.99	19.99		
	480 DS0 Channel Capacity - 1 per 20 DS1s			UEPMG	VUM4O	2,637.40	0.00	0.00					19.99	19.99		
	576 DS0 Channel Capacity -1 per 24 DS1s			UEPMG	VUM57	3,164.88	0.00	0.00					19.99	19.99		
	672 DS0 Channel Capacity - 1 per 28 DS1s			UEPMG	VUM67	3,692.36	0.00	0.00					19.99	19.99		
	Non-Recurring Charges (NRC) Associated with 4-Wire DS1 Loop with Channeliztion with Port - Conversion Charge Based on a System															
	A Minimum System configuration is One (1) DS1, One (1) D4 Channel Bank, and Up To 24 DSO Ports with Feature Activations.															
	Multiples of this configuration functioning as one are considered Add'l after the minimum system configuration is counted.															
	NRC - Conversion (Currently Combined) with or without BellSouth Allowed Changes			UEPMG	USAC4	0.00	303.61	15.74					19.99	19.99		
	System Additions at End User Locations Where 4-Wire DS1 Loop with Channelization with Port Combination Currently Exists and															
	New (Not Currently Combined) in all states, except in Density Zone 1 of Top 8 MSA's															
	1 DS1/D4 Channel Bank - Additionally Add NRC for each Port and Assoc Fea Activation (E:4/1/2004)			UEPMG	VUMD4	0.00	704.68	441.48	138.36	16.41			19.99			
	Bipolar 8 Zero Substitution															
	Clear Channel Capability Format, superframe - Subsequent Activity Only			UEPMG	CCOSF	0.00	0.00i	590.00s								
	Clear Channel Capability Format - Extended Superframe - Subsequent Activity Only			UEPMG	CCOEF	0.00	0.00i	590.00s								
	Alternate Mark Inversion (AMI)															
	Superframe Format			UEPMG	MCOSF	0.00	0.00	0.00								
	Extended Superframe Format			UEPMG	MCOPO	0.00	0.00	0.00								
	Exchange Ports Associated with 4-Wire DS1 Loop with Channelization with Port															
	Exchange Ports															
	Line Side Combination Channelized PBX Trunk Port - Business (E:4/1/2004)			UEPPX	UEPCX	1.70	0.00	0.00	0.00	0.00			30.89	7.03		
	Line Side Outward Channelized PBX Trunk Port - Business (E:4/1/2004)			UEPPX	UEPOX	1.70	0.00	0.00	0.00	0.00			30.89	7.03		
	Line Side Inward Only Channelized PBX Trunk Port without DID (E:4/1/2004)			UEPPX	UEP1X	1.70	0.00	0.00	0.00	0.00			30.89	7.03		
	2-Wire Trunk Side Unbundled Channelized DID Trunk Port (E:4/1/2004)			UEPPX	UEPDM	8.97	0.00	0.00	0.00	0.00			30.89	7.03		
	Unbundled Exchange Ports, 2-Wire Channelized – Outdial – (AL, KY, LA, MS, & TN)(Conversion from Network Access Service) (E:4/1/2004)			UEPPX	UEPCY	1.70	0.00	0.00	0.00	0.00			30.89	7.03		
	Unbundled Exchange Ports, 2-Wire Channelized – Combination (AL, KY, LA, MS, & TN) (Conversion from Network Access Service) (E:4/1/2004)			UEPPX	UEPCT	1.70	0.00	0.00	0.00	0.00			30.89	7.03		
	Unbundled Exchange Ports, 2-Wire Channelized – Outdial – Tennessee Only – Calling Plan - Regionserv (E:4/1/2004)			UEPPX	UEPCZ	1.70	0.00	0.00	0.00	0.00			30.89	7.03		
	Unbundled Exchange Ports, 2-Wire Channelized – Two Way - Tennessee Only – Calling Plan - Regionserv (E:4/1/2004)			UEPPX	UEPC6	1.70	0.00	0.00	0.00	0.00			30.89	7.03		
	Feature Activations - Unbundled Loop Concentration															
	Feature (Service) Activation for each Line Port Terminated in D4 Bank (includes Q.1.4, P50.1, P.50.498)			UEPPX	1PQWM	2.02	23.94	12.64	3.82	3.80			30.89	7.03		
	Feature (Service) Activation for each Trunk Port Terminated in D4 Bank (includes Q.1.4, P50.1, P.50.498)			UEPPX	1PQWU	2.02	73.67	17.37	54.09	10.57			30.89	7.03		
	Telephone Number/ Group Establishment Charges for DID Service															
	DID Trunk Termination (1 per Port)			UEPPX	NDT	0.00	0.00	0.00								
	DID Numbers - groups of 20 - Valid all States			UEPPX	ND4	0.00	0.00	0.00								
	Non-Consecutive DID Numbers - per number			UEPPX	ND5	0.00	0.00	0.00								
	Reserve Non-Consecutive DID Numbers			UEPPX	ND6	0.00	0.00	0.00								
	Reserve DID Numbers			UEPPX	NDV	0.00	0.00	0.00								
	Local Number Portability															
	Local Number Portability - 1 per port			UEPPX	LNPCP	3.15	0.00	0.00								
	FEATURES - Vertical and Optional															

UNBUNDLED NETWORK ELEMENTS - Tennessee													Attachment: 1		Table 1	
CATEGORY	RATE ELEMENTS	Interim	Zone	BCS	USOC	RATES ($)					Svc Order Submitted Elec per LSR	Svc Order Submitted Manually per LSR	Incremental Charge - Manual Svc Order vs. Electronic-1st	Incremental Charge - Manual Svc Order vs. Electronic-Add'l	Incremental Charge - Manual Svc Order vs. Electronic-Disc 1st	Incremental Charge - Manual Svc Order vs. Electronic-Disc Add'l
						Rec	Nonrecurring		Nonrecurring Disconnect		OSS Rates ($)					
							First	Add'l	First	Add'l	SOMEC	SOMAN	SOMAN	SOMAN	SOMAN	SOMAN
Local Switching Features Offered with Line Side Ports Only																
	All Features Available			UEPPX	UEPVF	0.00	0.00	0.00								
UNBUNDLED CENTREX PORT/LOOP COMBINATIONS - COST BASED RATES																
1. Cost Based Rates are applied where BellSouth is required by FCC and/or State Commission rule to provide Unbundled Local Switching or Switch Ports.																
2. Features shall apply to the Unbundled Port/Loop Combination - Cost Based Rate section in the same manner as they are applied to the Stand-Alone Unbundled Port section of this Rate Exhibit.																
3. End Office and Tandem Switching Usage and Common Transport Usage rates in the Port section of this rate exhibit shall apply to all combinations of loop/port network elements except for UNE Coin Port/Loop Combinations.																
4. The first and additional Port nonrecurring charges apply to Not Currently Combined Combos. For Currently Combined Combos, the nonrecurring charges shall be those identified in the Nonrecurring - Currently Combined sections. Additional NRCs may apply also and are categorized accordingly.																
5. Market Rates for Unbundled Centrex Port/Loop Combination will be negotiated on an Individual Case Basis, until further notice.																
UNE-P CENTREX - 1AESS - (Valid in AL,FL,GA,KY,LA,MS,&TN only)																
2-Wire VG Loop/2-Wire Voice Grade Port (Centrex) Combo																
UNE Port/Loop Combination Rates (Non-Design)																
	2-Wire VG Loop/2-Wire Voice Grade Port (Centrex) Port Combo - Non-Design		1	UEP91		14.18										
	2-Wire VG Loop/2-Wire Voice Grade Port (Centrex)Port Combo - Non-Design		2	UEP91		18.01										
	2-Wire VG Loop/2-Wire Voice Grade Port (Centrex)Port Combo - Non-Design		3	UEP91		23.02										
UNE Port/Loop Combination Rates (Design)																
	2-Wire VG Loop/2-Wire Voice Grade Port (Centrex) Port Combo - Design		1	UEP91		18.26										
	2-Wire VG Loop/2-Wire Voice Grade Port (Centrex)Port Combo - Design		2	UEP91		23.33										
	2-Wire VG Loop/2-Wire Voice Grade Port (Centrex)Port Combo - Design		3	UEP91		29.98										
UNE Loop Rate																
	2-Wire Voice Grade Loop (SL 1) - Zone 1		1	UEP91	UECS1	12.48										
	2-Wire Voice Grade Loop (SL 1) - Zone 2		2	UEP91	UECS1	16.31										
	2-Wire Voice Grade Loop (SL 1) - Zone 3		3	UEP91	UECS1	21.32										
	2-Wire Voice Grade Loop (SL 2) - Zone 1		1	UEP91	UECS2	16.56										
	2-Wire Voice Grade Loop (SL 2) - Zone 2		2	UEP91	UECS2	21.63										
	2-Wire Voice Grade Loop (SL 2) - Zone 3		3	UEP91	UECS2	28.28										
UNE Ports																
All States (Except North Carolina and Sout Carolina)																
	2-Wire Voice Grade Port (Centrex) Basic Local Area			UEP91	UEPYA	1.70	22.14	15.25	8.45	3.91		30.89	7.03			
	2-Wire Voice Grade Port (Centrex 800 termination)Basic Local Area			UEP91	UEPYB	1.70	22.14	15.25	8.45	3.91		30.89	7.03			
	2-Wire Voice Grade Port (Centrex with Caller ID)Note1 Basic Local Area			UEP91	UEPYH	1.70	22.14	15.25	8.45	3.91		30.89	7.03			
	2-Wire Voice Grade Port (Centrex from diff Serving Wire Center) Note 2, 3 Basic Local Area			UEP91	UEPYM	1.70	22.14	15.25	8.45	3.91		30.89	7.03			
	2-Wire Voice Grade Port, Diff Serving Wire Center - 800 Service Term - Basic Local Area			UEP91	UEPYZ	1.70	22.14	15.25	8.45	3.91		30.89	7.03			
	2-Wire Voice Grade Port terminated in on Megalink or equivalent - Basic Local Area			UEP91	UEPY9	1.70	22.14	15.25	8.45	3.91		30.89	7.03			
	2-Wire Voice Grade Port Terminated on 800 Service Term - Basic Local Area			UEP91	UEPY2	1.70	22.14	15.25	8.45	3.91		30.89	7.03			
AL, KY, LA, MS, & TN Only																
	2-Wire Voice Grade Port (Centrex)			UEP91	UEPQA	1.70	22.14	15.25	8.45	3.91		30.89	7.03			
	2-Wire Voice Grade Port (Centrex 800 termination)			UEP91	UEPQB	1.70	22.14	15.25	8.45	3.91		30.89	7.03			
	2-Wire Voice Grade Port (Centrex with Caller ID)1			UEP91	UEPQH	1.70	22.14	15.25	8.45	3.91		30.89	7.03			
	2-Wire Voice Grade Port (Centrex from diff Serving Wire Center)2,3			UEP91	UEPQM	1.70	22.14	15.25	8.45	3.91		30.89	7.03			
	2-Wire Voice Grade Port, Diff Serving Wire Center - 2,3 - 800 Service Term			UEP91	UEPQZ	1.70	22.14	15.25	8.45	3.91		30.89	7.03			
	2-Wire Voice Grade Port terminated in on Megalink or equivalent			UEP91	UEPQ9	1.70	22.14	15.25	8.45	3.91		30.89	7.03			
	2-Wire Voice Grade Port Terminated on 800 Service Term			UEP91	UEPQ2	1.70	22.14	15.25	8.45	3.91		30.89	7.03			
Local Switching																

UNBUNDLED NETWORK ELEMENTS - Tennessee														Attachment: 1		Table 1	
CATEGORY		RATE ELEMENTS	Interim	Zone	BCS	USOC	RATES ($)					Svc Order Submitted Elec per LSR	Svc Order Submitted Manually per LSR	Incremental Charge - Manual Svc Order vs. Electronic-1st	Incremental Charge - Manual Svc Order vs. Electronic-Add'l	Incremental Charge - Manual Svc Order vs. Electronic-Disc 1st	Incremental Charge - Manual Svc Order vs. Electronic-Disc Add'l
							Rec	Nonrecurring		Nonrecurring Disconnect				OSS Rates ($)			
								First	Add'l	First	Add'l	SOMEC	SOMAN	SOMAN	SOMAN	SOMAN	SOMAN
		Centrex Intercom Funtionality, per port			UEP91	URECS	0.6381										
	Local Number Portability																
		Local Number Portability (1 per port)			UEP91	LNPCC	0.35										
	Features																
		All Standard Features Offered, per port			UEP91	UEPVF	0.00						30.89	7.03			
		All Select Features Offered, per port			UEP91	UEPVS	0.00	433.78					30.89	7.03			
		All Centrex Control Features Offered, per port			UEP91	UEPVC	0.00						30.89	7.03			
	NARS																
		Unbundled Network Access Register - Combination			UEP91	UARCX	0.00	0.00	0.00	0.00	0.00		0.00	7.03			
		Unbundled Network Access Register - Indial			UEP91	UAR1X	0.00	0.00	0.00	0.00	0.00		0.00	7.03			
		Unbundled Network Access Register - Outdial			UEP91	UAROX	0.00	0.00	0.00	0.00	0.00		0.00	7.03			
	Miscellaneous Terminations																
	2-Wire Trunk Side																
		Trunk Side Terminations, each			UEP91	CENA6	8.78	22.14	15.25	8.45	3.91		30.89	7.03			
	Interoffice Channel Mileage - 2-Wire																
		Interoffice Channel Facilities Termination - Voice Grade			UEP91	M1GBC	18.58	22.14	15.25	8.45	3.91		30.89	7.03			
		Interoffice Channel mileage, per mile or fraction of mile			UEP91	M1GBM	0.0174										
	Feature Activations (DS0) Centrex Loops on Channelized DS1 Service																
	D4 Channel Bank Feature Activations																
		Feature Activation on D-4 Channel Bank Centrex Loop Slot			UEP91	1PQWS	0.66										
		Feature Activation on D-4 Channel Bank FX line Side Loop Slot			UEP91	1PQW6	0.66										
		Feature Activation on D-4 Channel Bank FX Trunk Side Loop Slot			UEP91	1PQW7	0.66										
		Feature Activation on D-4 Channel Bank Centrex Loop Slot - Different Wire Center			UEP91	1PQWP	0.66										
		Feature Activation on D-4 Channel Bank Private Line Loop Slot			UEP91	1PQWV	0.66										
		Feature Activation on D-4 Channel Bank Tjie Line/Trunk Loop Slot			UEP91	1PQWQ	0.66										
		Feature Activation on D-4 Channel Bank WATS Loop Slot			UEP91	1PQWA	0.66										
	Non-Recurring Charges (NRC) Associated with UNE-P Centrex																
		Conversion - Currently Combined Switch-As-Is with allowed changes, per port			UEP91	USAC2		1.03	0.29				30.89	7.03			
		New Centrex Standard Common Block			UEP91	M1ACS	0.00	658.60					30.89	7.03			
		New Centrex Customized Common Block			UEP91	M1ACC	0.00	658.60					30.89	7.03			
		Secondary Block, per Block			UEP91	M2CC1	0.00	73.55					30.89	7.03			
		NAR Establishment Charge, Per Occasion			UEP91	URECA		68.57					30.89	7.03			
	Additional Non-Recurring Charges (NRC)																
		Unbundled Miscellaneous Rate Element, Tag Loop at End Use Premise			UEP91	URETL		8.33	0.83								
		Unbundled Miscellaneous Rate Element, Tag Design Loop at End Use Premise			UEP91	URETN		11.23	1.10								
	UNE-P CENTREX - 5ESS (Valid in All States)																
	2-Wire VG Loop/2-Wire Voice Grade Port (Centrex) Combo																
	UNE Port/Loop Combination Rates (Non-Design)																
		2-Wire VG Loop/2-Wire Voice Grade Port (Centrex) Port Combo - Non-Design		1	UEP95		14.18										
		2-Wire VG Loop/2-Wire Voice Grade Port (Centrex)Port Combo - Non-Design		2	UEP95		18.01										
		2-Wire VG Loop/2-Wire Voice Grade Port (Centrex)Port Combo - Non-Design		3	UEP95		23.02										
	UNE Port/Loop Combination Rates (Design)																
		2-Wire VG Loop/2-Wire Voice Grade Port (Centrex) Port Combo - Design		1	UEP95		18.26										
		2-Wire VG Loop/2-Wire Voice Grade Port (Centrex)Port Combo - Design		2	UEP95		23.33										
		2-Wire VG Loop/2-Wire Voice Grade Port (Centrex)Port Combo - Design		3	UEP95		29.98										

UNBUNDLED NETWORK ELEMENTS - Tennessee														Attachment: 1		Table 1	
CATEGORY	RATE ELEMENTS	Interim	Zone	BCS	USOC	RATES ($)					Svc Order Submitted Elec per LSR	Svc Order Submitted Manually per LSR	Incremental Charge - Manual Svc Order vs. Electronic-1st	Incremental Charge - Manual Svc Order vs. Electronic-Add'l	Incremental Charge - Manual Svc Order vs. Electronic-Disc 1st	Incremental Charge - Manual Svc Order vs. Electronic-Disc Add'l
						Rec	Nonrecurring		Nonrecurring Disconnect		OSS Rates ($)					
							First	Add'l	First	Add'l	SOMEC	SOMAN	SOMAN	SOMAN	SOMAN	SOMAN
UNE Loop Rate																
	2-Wire Voice Grade Loop (SL 1) - Zone 1		1	UEP95	UECS1	12.48										
	2-Wire Voice Grade Loop (SL 1) - Zone 2		2	UEP95	UECS1	16.31										
	2-Wire Voice Grade Loop (SL 1) - Zone 3		3	UEP95	UECS1	21.32										
	2-Wire Voice Grade Loop (SL 2) - Zone 1		1	UEP95	UECS2	16.56										
	2-Wire Voice Grade Loop (SL 2) - Zone 2		2	UEP95	UECS2	21.63										
	2-Wire Voice Grade Loop (SL 2) - Zone 3		3	UEP95	UECS2	28.28										
UNE Port Rate																
All States																
	2-Wire Voice Grade Port (Centrex) Basic Local Area			UEP95	UEPYA	1.70	22.14	15.25	8.45	3.91		30.89	7.03			
	2-Wire Voice Grade Port (Centrex 800 termination)			UEP95	UEPYB	1.70	22.14	15.25	8.45	3.91		30.89	7.03			
	2-Wire Voice Grade Port (Centrex with Caller ID)1Basic Local Area			UEP95	UEPYH	1.70	22.14	15.25	8.45	3.91		30.89	7.03			
	2-Wire Voice Grade Port (Centrex from diff Serving Wire Center)2,3 Basic Local Area			UEP95	UEPYM	1.70	22.14	15.25	8.45	3.91		30.89	7.03			
	2-Wire Voice Grade Port, Diff Serving Wire Center 2,3 - 800 Service Term - Basic Local Area			UEP95	UEPYZ	1.70	22.14	15.25	8.45	3.91		30.89	7.03			
	2-Wire Voice Grade Port terminated in on Megalink or equivalent - Basic Local Area			UEP95	UEPY9	1.70	22.14	15.25	8.45	3.91		30.89	7.03			
	2-Wire Voice Grade Port Terminated on 800 Service Term - Basic Local Area			UEP95	UEPY2	1.70	22.14	15.25	8.45	3.91		30.89	7.03			
AL, KY, LA, MS, SC, & TN Only																
	2-Wire Voice Grade Port (Centrex)			UEP95	UEPQA	1.70	22.14	15.25	8.45	3.91		30.89	7.03			
	2-Wire Voice Grade Port (Centrex 800 termination)			UEP95	UEPQB	1.70	22.14	15.25	8.45	3.91		30.89	7.03			
	2-Wire Voice Grade Port (Centrex with Caller ID)1			UEP95	UEPQH	1.70	22.14	15.25	8.45	3.91		30.89	7.03			
	2-Wire Voice Grade Port (Centrex from diff Serving Wire Center)2,3			UEP95	UEPQM	1.70	22.14	15.25	8.45	3.91		30.89	7.03			
	2-Wire Voice Grade Port, Diff Serving Wire Center - 800 Service Term 2,3			UEP95	UEPQZ	1.70	22.14	15.25	8.45	3.91		30.89	7.03			
	2-Wire Voice Grade Port terminated in on Megalink or equivalent			UEP95	UEPQ9	1.70	22.14	15.25	8.45	3.91		30.89	7.03			
	2-Wire Voice Grade Port Terminated on 800 Service Term			UEP95	UEPQ2	1.70	22.14	15.25	8.45	3.91		30.89	7.03			
FL & GA Only																
Local Switching																
	Centrex Intercom Funtionality, per port			UEP95	URECS	0.6381										
Local Number Portability																
	Local Number Portability (1 per port)			UEP95	LNPCC	0.35										
Features																
	All Standard Features Offered, per port			UEP95	UEPVF	0.00						30.89	7.03			
	All Select Features Offered, per port			UEP95	UEPVS	0.00	433.78					30.89	7.03			
	All Centrex Control Features Offered, per port			UEP95	UEPVC	0.00						30.89	7.03			
NARS																
	Unbundled Network Access Register - Combination			UEP95	UARCX	0.00	0.00	0.00	0.00	0.00		0.00	7.03			
	Unbundled Network Access Register - Indial			UEP95	UAR1X	0.00	0.00	0.00	0.00	0.00		0.00	7.03			
	Unbundled Network Access Register - Outdial			UEP95	UAROX	0.00	0.00	0.00	0.00	0.00		0.00	7.03			
Miscellaneous Terminations																
2-Wire Trunk Side																
	Trunk Side Terminations, each			UEP95	CEND6	8.78	47.75	47.01	9.21	8.47		30.89	7.03			
4-Wire Digital (1.544 Megabits)																
	DS1 Circuit Terminations, each			UEP95	M1HD1	35.55	75.93	38.15				30.89	7.03			
	DS0 Channels Activated, each			UEP95	M1HDO	0.00	108.67					30.89	7.03			
Interoffice Channel Mileage - 2-Wire																
	Interoffice Channel Facilities Termination			UEP95	M1GBC	18.58	22.14	15.25	8.45	3.91		30.89	7.03			
	Interoffice Channel mileage, per mile or fraction of mile			UEP95	M1GBM	0.0174										
Feature Activations (DS0) Centrex Loops on Channelized DS1 Service																
D4 Channel Bank Feature Activations																
	Feature Activation on D-4 Channel Bank Centrex Loop Slot			UEP95	1PQWS	0.66										
	Feature Activation on D-4 Channel Bank FX line Side Loop Slot			UEP95	1PQW6	0.66										

UNBUNDLED NETWORK ELEMENTS - Tennessee														Attachment: 1		Table 1	
CATEGORY		RATE ELEMENTS	Interim	Zone	BCS	USOC	RATES ($)					Svc Order Submitted Elec per LSR	Svc Order Submitted Manually per LSR	Incremental Charge - Manual Svc Order vs. Electronic-1st	Incremental Charge - Manual Svc Order vs. Electronic-Add'l	Incremental Charge - Manual Svc Order vs. Electronic-Disc 1st	Incremental Charge - Manual Svc Order vs. Electronic-Disc Add'l
							Rec	Nonrecurring		Nonrecurring Disconnect		OSS Rates ($)					
								First	Add'l	First	Add'l	SOMEC	SOMAN	SOMAN	SOMAN	SOMAN	SOMAN
		Feature Activation on D-4 Channel Bank FX Trunk Side Loop Slot			UEP95	1PQW7	0.66										
		Feature Activation on D-4 Channel Bank Centrex Loop Slot - Different Wire Center			UEP95	1PQWP	0.66										
		Feature Activation on D-4 Channel Bank Private Line Loop Slot			UEP95	1PQWV	0.66										
		Feature Activation on D-4 Channel Bank Tjie Line/Trunk Loop Slot			UEP95	1PQWQ	0.66										
		Feature Activation on D-4 Channel Bank WATS Loop Slot			UEP95	1PQWA	0.66										
	Non-Recurring Charges (NRC) Associated with UNE-P Centrex																
		NRC Conversion Currently Combined Switch-As-Is with allowed changes, per port			UEP95	USAC2		1.03	0.29				30.89	7.03			
		New Centrex Standard Common Block			UEP95	M1ACS	0.00	658.60					30.89	7.03			
		New Centrex Customized Common Block			UEP95	M1ACC	0.00	658.60					30.89	7.03			
		NAR Establishment Charge, Per Occasion			UEP95	URECA	0.00	68.57					30.89	7.03			
	Additional Non-Recurring Charges (NRC)																
		Unbundled Miscellaneous Rate Element, Tag Loop at End Use Premise			UEP95	URETL		8.33	0.83								
		Unbundled Miscellaneous Rate Element, Tag Design Loop at End Use Premise			UEP95	URETN		11.23	1.10								
	UNE-P CENTREX - DMS100 (Valid in All States)																
	2-Wire VG Loop/2-Wire Voice Grade Port (Centrex) Combo																
	UNE Port/Loop Combination Rates (Non-Design)																
		2-Wire VG Loop/2-Wire Voice Grade Port (Centrex) Port Combo - Non-Design		1	UEP9D		14.18										
		2-Wire VG Loop/2-Wire Voice Grade Port (Centrex)Port Combo - Non-Design		2	UEP9D		18.01										
		2-Wire VG Loop/2-Wire Voice Grade Port (Centrex)Port Combo - Non-Design		3	UEP9D		23.02										
	UNE Port/Loop Combination Rates (Design)																
		2-Wire VG Loop/2-Wire Voice Grade Port (Centrex) Port Combo - Design		1	UEP9D		18.26										
		2-Wire VG Loop/2-Wire Voice Grade Port (Centrex)Port Combo - Design		2	UEP9D		23.33										
		2-Wire VG Loop/2-Wire Voice Grade Port (Centrex)Port Combo - Design		3	UEP9D		29.98										
	UNE Loop Rate																
		2-Wire Voice Grade Loop (SL 1) - Zone 1		1	UEP9D	UECS1	12.48										
		2-Wire Voice Grade Loop (SL 1) - Zone 2		2	UEP9D	UECS1	16.31										
		2-Wire Voice Grade Loop (SL 1) - Zone 3		3	UEP9D	UECS1	21.32										
		2-Wire Voice Grade Loop (SL 2) - Zone 1		1	UEP9D	UECS2	16.56										
		2-Wire Voice Grade Loop (SL 2) - Zone 2		2	UEP9D	UECS2	21.63										
		2-Wire Voice Grade Loop (SL 2) - Zone 3		3	UEP9D	UECS2	28.28										
	UNE Port Rate																
	ALL STATES																
		2-Wire Voice Grade Port (Centrex) Basic Local Area			UEP9D	UEPYA	1.70	22.14	15.25	8.45	3.91		30.89	7.03			
		2-Wire Voice Grade Port (Centrex 800 termination)Basic Local Area			UEP9D	UEPYB	1.70	22.14	15.25	8.45	3.91		30.89	7.03			
		2-Wire Voice Grade Port (Centrex / EBS-PSET)3Basic Local Area			UEP9D	UEPYC	1.70	22.14	15.25	8.45	3.91		30.89	7.03			
		2-Wire Voice Grade Port (Centrex / EBS-M5009)3Basic Local Area			UEP9D	UEPYD	1.70	22.14	15.25	8.45	3.91		30.89	7.03			
		2-Wire Voice Grade Port (Centrex / EBS-M5209))3 Basic Local Area			UEP9D	UEPYE	1.70	22.14	15.25	8.45	3.91		30.89	7.03			
		2-Wire Voice Grade Port (Centrex / EBS-M5112))3 Basic Local Area			UEP9D	UEPYF	1.70	22.14	15.25	8.45	3.91		30.89	7.03			
		2-Wire Voice Grade Port (Centrex / EBS-M5312))3Basic Local Area			UEP9D	UEPYG	1.70	22.14	15.25	8.45	3.91		30.89	7.03			

UNBUNDLED NETWORK ELEMENTS - Tennessee															Attachment: 1		Table 1	
CATEGORY		RATE ELEMENTS	Interim	Zone	BCS	USOC	RATES ($)					Svc Order Submitted Elec per LSR	Svc Order Submitted Manually per LSR	Incremental Charge - Manual Svc Order vs. Electronic-1st	Incremental Charge - Manual Svc Order vs. Electronic-Add'l	Incremental Charge - Manual Svc Order vs. Electronic-Disc 1st	Incremental Charge - Manual Svc Order vs. Electronic-Disc Add'l
							Rec	Nonrecurring		Nonrecurring Disconnect				OSS Rates ($)			
								First	Add'l	First	Add'l	SOMEC	SOMAN	SOMAN	SOMAN	SOMAN	SOMAN
		2-Wire Voice Grade Port (Centrex / EBS-M5008))3 Basic Local Area			UEP9D	UEPYT	1.70	22.14	15.25	8.45	3.91		30.89	7.03			
		2-Wire Voice Grade Port (Centrex / EBS-M5208))3 Basic Local Area			UEP9D	UEPYU	1.70	22.14	15.25	8.45	3.91		30.89	7.03			
		2-Wire Voice Grade Port (Centrex / EBS-M5216))3 Basic Local Area			UEP9D	UEPYV	1.70	22.14	15.25	8.45	3.91		30.89	7.03			
		2-Wire Voice Grade Port (Centrex / EBS-M5316))3 Basic Local Area			UEP9D	UEPY3	1.70	22.14	15.25	8.45	3.91		30.89	7.03			
		2-Wire Voice Grade Port (Centrex with Caller ID) Basic Local Area			UEP9D	UEPYH	1.70	22.14	15.25	8.45	3.91		30.89	7.03			
		2-Wire Voice Grade Port (Centrex/Caller ID/Msg Wtg Lamp Indication))4 Basic Local Area			UEP9D	UEPYW	1.70	22.14	15.25	8.45	3.91		30.89	7.03			
		2-Wire Voice Grade Port (Centrex/Msg Wtg Lamp Indication))4 Basic Local Area			UEP9D	UEPYJ	1.70	22.14	15.25	8.45	3.91		30.89	7.03			
		2-Wire Voice Grade Port (Centrex from diff Serving Wire Center) 2,3-Basic Local Area			UEP9D	UEPYM	1.70	22.14	15.25	8.45	3.91		30.89	7.03			
		2-Wire Voice Grade Port (Centrex/differ SWC /EBS-PSET)2,3,4 Basic Local Area			UEP9D	UEPYO	1.70	22.14	15.25	8.45	3.91		30.89	7.03			
		2-Wire Voice Grade Port (Centrex/differ SWC /EBS-M5009)2,3,4 Basic Local Area			UEP9D	UEPYP	1.70	22.14	15.25	8.45	3.91		30.89	7.03			
		2-Wire Voice Grade Port (Centrex/differ SWC /EBS-5209)2,3,4 Basic Local Area			UEP9D	UEPYQ	1.70	22.14	15.25	8.45	3.91		30.89	7.03			
		2-Wire Voice Grade Port (Centrex/differ SWC /EBS-M5112)2,3,4 Basic Local Area			UEP9D	UEPYR	1.70	22.14	15.25	8.45	3.91		30.89	7.03			
		2-Wire Voice Grade Port (Centrex/differ SWC /EBS-M5312)2,3,4 Basic Local Area			UEP9D	UEPYS	1.70	22.14	15.25	8.45	3.91		30.89	7.03			
		2-Wire Voice Grade Port (Centrex/differ SWC /EBS-M5008)2,3,4 Basic Local Area			UEP9D	UEPY4	1.70	22.14	15.25	8.45	3.91		30.89	7.03			
		2-Wire Voice Grade Port (Centrex/differ SWC /EBS-M5208)2, 3 Basic Local Area			UEP9D	UEPY5	1.70	22.14	15.25	8.45	3.91		30.89	7.03			
		2-Wire Voice Grade Port (Centrex/differ SWC /EBS-M5216)2,3,4 Basic Local Area			UEP9D	UEPY6	1.70	22.14	15.25	8.45	3.91		30.89	7.03			
		2-Wire Voice Grade Port (Centrex/differ SWC /EBS-M5316)2,3,4 Basic Local Area			UEP9D	UEPY7	1.70	22.14	15.25	8.45	3.91		30.89	7.03			
		2-Wire Voice Grade Port, Diff Serving Wire Center - 800 Service Term 2,3			UEP9D	UEPYZ	1.70	22.14	15.25	8.45	3.91		30.89	7.03			
		2-Wire Voice Grade Port terminated in on Megalink or equivalent Basic Local Area			UEP9D	UEPY9	1.70	22.14	15.25	8.45	3.91		30.89	7.03			
		2-Wire Voice Grade Port Terminated on 800 Service Term Basic Local Area			UEP9D	UEPY2	1.70	22.14	15.25	8.45	3.91		30.89	7.03			
	AL, KY, LA, MS, SC, & TN Only																
		2-Wire Voice Grade Port (Centrex)			UEP9D	UEPQA	1.70	22.14	15.25	8.45	3.91		30.89	7.03			
		2-Wire Voice Grade Port (Centrex 800 termination)			UEP9D	UEPQB	1.70	22.14	15.25	8.45	3.91		30.89	7.03			
		2-Wire Voice Grade Port (Centrex / EBS-PSET)4			UEP9D	UEPQC	1.70	22.14	15.25	8.45	3.91		30.89	7.03			
		2-Wire Voice Grade Port (Centrex / EBS-M5009)4			UEP9D	UEPQD	1.70	22.14	15.25	8.45	3.91		30.89	7.03			
		2-Wire Voice Grade Port (Centrex / EBS-M5209)4			UEP9D	UEPQE	1.70	22.14	15.25	8.45	3.91		30.89	7.03			
		2-Wire Voice Grade Port (Centrex / EBS-M5112)4			UEP9D	UEPQF	1.70	22.14	15.25	8.45	3.91		30.89	7.03			
		2-Wire Voice Grade Port (Centrex / EBS-M5312)4			UEP9D	UEPQG	1.70	22.14	15.25	8.45	3.91		30.89	7.03			
		2-Wire Voice Grade Port (Centrex / EBS-M5008)4			UEP9D	UEPQT	1.70	22.14	15.25	8.45	3.91		30.89	7.03			
		2-Wire Voice Grade Port (Centrex / EBS-M5208)4			UEP9D	UEPQU	1.70	22.14	15.25	8.45	3.91		30.89	7.03			
		2-Wire Voice Grade Port (Centrex / EBS-M5216)4			UEP9D	UEPQV	1.70	22.14	15.25	8.45	3.91		30.89	7.03			
		2-Wire Voice Grade Port (Centrex / EBS-M5316)4			UEP9D	UEPQ3	1.70	22.14	15.25	8.45	3.91		30.89	7.03			
		2-Wire Voice Grade Port (Centrex with Caller ID)			UEP9D	UEPQH	1.70	22.14	15.25	8.45	3.91		30.89	7.03			
		2-Wire Voice Grade Port (Centrex/Caller ID/Msg Wtg Lamp Indication)4			UEP9D	UEPQW	1.70	22.14	15.25	8.45	3.91		30.89	7.03			
		2-Wire Voice Grade Port (Centrex/Msg Wtg Lamp Indication)4			UEP9D	UEPQJ	1.70	22.14	15.25	8.45	3.91		30.89	7.03			
		2-Wire Voice Grade Port (Centrex from diff Serving Wire Center) 2,3			UEP9D	UEPQM	1.70	22.14	15.25	8.45	3.91		30.89	7.03			

UNBUNDLED NETWORK ELEMENTS - Tennessee														Attachment: 1		Table 1	
CATEGORY	RATE ELEMENTS	Interim	Zone	BCS	USOC	RATES ($)					Svc Order Submitted Elec per LSR	Svc Order Submitted Manually per LSR	Incremental Charge - Manual Svc Order vs. Electronic-1st	Incremental Charge - Manual Svc Order vs. Electronic-Add'l	Incremental Charge - Manual Svc Order vs. Electronic-Disc 1st	Incremental Charge - Manual Svc Order vs. Electronic-Disc Add'l
						Rec	Nonrecurring		Nonrecurring Disconnect				OSS Rates ($)			
							First	Add'l	First	Add'l	SOMEC	SOMAN	SOMAN	SOMAN	SOMAN	SOMAN
	2-Wire Voice Grade Port (Centrex/differ SWC /EBS-PSET)2,3,4			UEP9D	UEPQO	1.70	22.14	15.25	8.45	3.91		30.89	7.03			
	2-Wire Voice Grade Port (Centrex/differ SWC /EBS-M5009)2,3,4			UEP9D	UEPQP	1.70	22.14	15.25	8.45	3.91		30.89	7.03			
	2-Wire Voice Grade Port (Centrex/differ SWC /EBS-5209)2,3,4			UEP9D	UEPQQ	1.70	22.14	15.25	8.45	3.91		30.89	7.03			
	2-Wire Voice Grade Port (Centrex/differ SWC /EBS-M5112)2,3,4			UEP9D	UEPQR	1.70	22.14	15.25	8.45	3.91		30.89	7.03			
	2-Wire Voice Grade Port (Centrex/differ SWC /EBS-M5312)2,3,4			UEP9D	UEPQS	1.70	22.14	15.25	8.45	3.91		30.89	7.03			
	2-Wire Voice Grade Port (Centrex/differ SWC /EBS-M5008)2,3,4			UEP9D	UEPQ4	1.70	22.14	15.25	8.45	3.91		30.89	7.03			
	2-Wire Voice Grade Port (Centrex/differ SWC /EBS-M5208)2,3,4			UEP9D	UEPQ5	1.70	22.14	15.25	8.45	3.91		30.89	7.03			
	2-Wire Voice Grade Port (Centrex/differ SWC /EBS-M5216)2,3,4			UEP9D	UEPQ6	1.70	22.14	15.25	8.45	3.91		30.89	7.03			
	2-Wire Voice Grade Port (Centrex/differ SWC /EBS-M5316)2,3,4			UEP9D	UEPQ7	1.70	22.14	15.25	8.45	3.91		30.89	7.03			
	2-Wire Voice Grade Port, Diff Serving Wire Center - 800 Service Term 2,3			UEP9D	UEPQZ	1.70	22.14	15.25	8.45	3.91		30.89	7.03			
	2-Wire Voice Grade Port terminated in on Megalink or equivalent			UEP9D	UEPQ9	1.70	22.14	15.25	8.45	3.91		30.89	7.03			
	2-Wire Voice Grade Port Terminated on 800 Service Term			UEP9D	UEPQ2	1.70	22.14	15.25	8.45	3.91		30.89	7.03			
Local Switching																
	Centrex Intercom Funtionality, per port			UEP9D	URECS	0.6381										
Local Number Portability																
	Local Number Portability (1 per port)			UEP9D	LNPCC	0.35										
Features																
	All Standard Features Offered, per port			UEP9D	UEPVF	0.00						30.89	7.03			
	All Select Features Offered, per port			UEP9D	UEPVS	0.00	433.78					30.89	7.03			
	All Centrex Control Features Offered, per port			UEP9D	UEPVC	0.00						30.89	7.03			
NARS																
	Unbundled Network Access Register - Combination			UEP9D	UARCX	0.00	0.00	0.00	0.00	0.00		0.00	7.03			
	Unbundled Network Access Register - Inward			UEP9D	UAR1X	0.00	0.00	0.00	0.00	0.00		0.00	7.03			
	Unbundled Network Access Register - Outdial			UEP9D	UAROX	0.00	0.00	0.00	0.00	0.00		0.00	7.03			
Miscellaneous Terminations																
2-Wire Trunk Side																
	Trunk Side Terminations, each			UEP9D	CEND6	8.78	22.14	15.25	8.45	3.91		30.89	7.03			
4-Wire Digital (1.544 Megabits)																
	DS1 Circuit Terminations, each			UEP9D	M1HD1	35.55	75.93	38.15				30.89	7.03			
	DS0 Channels Activiated per Channel			UEP9D	M1HDO	0.00	108.67					30.89	7.03			
Interoffice Channel Mileage - 2-Wire																
	Interoffice Channel Facilities Termination			UEP9D	M1GBC	18.58	22.14	15.25	8.45	3.91		30.89	7.03			
	Interoffice Channel mileage, per mile or fraction of mile			UEP9D	M1GBM	0.0174										
Feature Activations (DS0) Centrex Loops on Channelized DS1 Service																
D4 Channel Bank Feature Activations																
	Feature Activation on D-4 Channel Bank Centrex Loop Slot			UEP9D	1PQWS	0.66										
	Feature Activation on D-4 Channel Bank FX line Side Loop Slot			UEP9D	1PQW6	0.66										
	Feature Activation on D-4 Channel Bank FX Trunk Side Loop Slot			UEP9D	1PQW7	0.66										
	Feature Activation on D-4 Channel Bank Centrex Loop Slot - Different Wire Center			UEP9D	1PQWP	0.66										
	Feature Activation on D-4 Channel Bank Private Line Loop Slot			UEP9D	1PQWV	0.66										
	Feature Activation on D-4 Channel Bank Tjie Line/Trunk Loop Slot			UEP9D	1PQWQ	0.66										
	Feature Activation on D-4 Channel Bank WATS Loop Slot			UEP9D	1PQWA	0.66										
Non-Recurring Charges (NRC) Associated with UNE-P Centrex																

UNBUNDLED NETWORK ELEMENTS - Tennessee														Attachment: 1		Table 1	
CATEGORY		RATE ELEMENTS	Interim	Zone	BCS	USOC	RATES ($)					Svc Order Submitted Elec per LSR	Svc Order Submitted Manually per LSR	Incremental Charge - Manual Svc Order vs. Electronic-1st	Incremental Charge - Manual Svc Order vs. Electronic-Add'l	Incremental Charge - Manual Svc Order vs. Electronic-Disc 1st	Incremental Charge - Manual Svc Order vs. Electronic-Disc Add'l
							Rec	Nonrecurring		Nonrecurring Disconnect		OSS Rates ($)					
								First	Add'l	First	Add'l	SOMEC	SOMAN	SOMAN	SOMAN	SOMAN	SOMAN
		NRC Conversion Currently Combined Switch-As-Is with allowed changes, per port			UEP9D	USAC2		1.03	0.29				30.89	7.03			
		New Centrex Standard Common Block			UEP9D	M1ACS	0.00	658.60					30.89	7.03			
		New Centrex Customized Common Block			UEP9D	M1ACC	0.00	658.60					30.89	7.03			
		NAR Establishment Charge, Per Occasion			UEP9D	URECA		68.57					30.89	7.03			
	Additional Non-Recurring Charges (NRC)																
		Unbundled Miscellaneous Rate Element, Tag Loop at End Use Premise			UEP9D	URETL		8.33	0.83								
		Unbundled Miscellaneous Rate Element, Tag Design Loop at End Use Premise			UEP9D	URETN		11.23	1.10								
	UNE-P CENTREX - EWSD (Valid in AL, FL, KY, LA, MS & TN)																
	2-Wire VG Loop/2-Wire Voice Grade Port (Centrex) Combo																
	UNE Port/Loop Combination Rates (Non-Design)																
		2-Wire VG Loop/2-Wire Voice Grade Port (Centrex) Port Combo - Non-Design		1	UEP9E		14.18										
		2-Wire VG Loop/2-Wire Voice Grade Port (Centrex)Port Combo - Non-Design		2	UEP9E		18.01										
		2-Wire VG Loop/2-Wire Voice Grade Port (Centrex)Port Combo - Non-Design		3	UEP9E		23.02										
	UNE Port/Loop Combination Rates (Design)																
		2-Wire VG Loop/2-Wire Voice Grade Port (Centrex) Port Combo - Design		1	UEP9E		18.26										
		2-Wire VG Loop/2-Wire Voice Grade Port (Centrex)Port Combo - Design		2	UEP9E		23.33										
		2-Wire VG Loop/2-Wire Voice Grade Port (Centrex)Port Combo - Design		3	UEP9E		29.98										
	UNE Loop Rate																
		2-Wire Voice Grade Loop (SL 1) - Zone 1		1	UEP9E	UECS1	12.48										
		2-Wire Voice Grade Loop (SL 1) - Zone 2		2	UEP9E	UECS1	16.31										
		2-Wire Voice Grade Loop (SL 1) - Zone 3		3	UEP9E	UECS1	21.32										
		2-Wire Voice Grade Loop (SL 2) - Zone 1		1	UEP9E	UECS2	16.56										
		2-Wire Voice Grade Loop (SL 2) - Zone 2		2	UEP9E	UECS2	21.63										
		2-Wire Voice Grade Loop (SL 2) - Zone 3		3	UEP9E	UECS2	28.28										
	UNE Port Rate																
	AL, FL, KY, LA, MS, & TN only																
		2-Wire Voice Grade Port (Centrex) Basic Local Area			UEP9E	UEPYA	1.70	22.14	15.25	8.45	3.91		30.89	7.03			
		2-Wire Voice Grade Port (Centrex 800 termination)Basic Local Area			UEP9E	UEPYB	1.70	22.14	15.25	8.45	3.91		30.89	7.03			
		2-Wire Voice Grade Port (Centrex with Caller ID)1Basic Local Area			UEP9E	UEPYH	1.70	22.14	15.25	8.45	3.91		30.89	7.03			
		2-Wire Voice Grade Port (Centrex from diff Serving Wire Center)2,3 Basic Local Area			UEP9E	UEPYM	1.70	22.14	15.25	8.45	3.91		30.89	7.03			
		2-Wire Voice Grade Port, Diff Serving Wire Center 2,3 - 800 Service Term - Basic Local Area			UEP9E	UEPYZ	1.70	22.14	15.25	8.45	3.91		30.89	7.03			
		2-Wire Voice Grade Port terminated in on Megalink or equivalent - Basic Local Area			UEP9E	UEPY9	1.70	22.14	15.25	8.45	3.91		30.89	7.03			
		2-Wire Voice Grade Port Terminated on 800 Service Term - Basic Local Area			UEP9E	UEPY2	1.70	22.14	15.25	8.45	3.91		30.89	7.03			
	AL, KY, LA, MS, & TN Only																
		2-Wire Voice Grade Port (Centrex)			UEP9E	UEPQA	1.70	22.14	15.25	8.45	3.91		30.89	7.03			
		2-Wire Voice Grade Port (Centrex 800 termination)			UEP9E	UEPQB	1.70	22.14	15.25	8.45	3.91		30.89	7.03			
		2-Wire Voice Grade Port (Centrex with Caller ID)1			UEP9E	UEPQH	1.70	22.14	15.25	8.45	3.91		30.89	7.03			
		2-Wire Voice Grade Port (Centrex from diff Serving Wire Center)2,3			UEP9E	UEPQM	1.70	22.14	15.25	8.45	3.91		30.89	7.03			
		2-Wire Voice Grade Port, Diff Serving Wire Center 2,3 - 800 Service Term			UEP9E	UEPQZ	1.70	22.14	15.25	8.45	3.91		30.89	7.03			
		2-Wire Voice Grade Port terminated in on Megalink or equivalent			UEP9E	UEPQ9	1.70	22.14	15.25	8.45	3.91		30.89	7.03			
		2-Wire Voice Grade Port Terminated on 800 Service Term			UEP9E	UEPQ2	1.70	22.14	15.25	8.45	3.91		30.89	7.03			

UNBUNDLED NETWORK ELEMENTS - Tennessee														Attachment: 1		Table 1	
CATEGORY	RATE ELEMENTS	Interim	Zone	BCS	USOC	RATES ($)					Svc Order Submitted Elec per LSR	Svc Order Submitted Manually per LSR	Incremental Charge - Manual Svc Order vs. Electronic-1st	Incremental Charge - Manual Svc Order vs. Electronic-Add'l	Incremental Charge - Manual Svc Order vs. Electronic-Disc 1st	Incremental Charge - Manual Svc Order vs. Electronic-Disc Add'l
						Rec	Nonrecurring		Nonrecurring Disconnect		OSS Rates ($)					
							First	Add'l	First	Add'l	SOMEC	SOMAN	SOMAN	SOMAN	SOMAN	SOMAN
Local Switching																
	Centrex Intercom Funtionality, per port			UEP9E	URECS	0.6381										
Local Number Portability																
	Local Number Portability (1 per port)			UEP9E	LNPCC	0.35										
Features																
	All Standard Features Offered, per port			UEP9E	UEPVF	0.00						30.89	7.03			
	All Select Features Offered, per port			UEP9E	UEPVS	0.00	433.78					30.89	7.03			
	All Centrex Control Features Offered, per port			UEP9E	UEPVC	0.00						30.89	7.03			
NARS																
	Unbundled Network Access Register - Combination			UEP9E	UARCX	0.00	0.00	0.00	0.00	0.00		0.00	7.03			
	Unbundled Network Access Register - Indial			UEP9E	UAR1X	0.00	0.00	0.00	0.00	0.00		0.00	7.03			
	Unbundled Network Access Register - Outdial			UEP9E	UAROX	0.00	0.00	0.00	0.00	0.00		0.00	7.03			
Miscellaneous Terminations																
2-Wire Trunk Side																
	Trunk Side Terminations, each			UEP9E	CEND6	8.78	22.14	15.25	8.45	3.91		30.89	7.03			
4-Wire Digital (1.544 Megabits)																
	DS1 Circuit Terminations, each			UEP9E	M1HD1	35.55	75.93	38.15				30.89	7.03			
	DS0 Channel Activated Per Channel			UEP9E	M1HDO	0.00	108.67					30.89	7.03			
Interoffice Channel Mileage - 2-Wire																
	Interoffice Channel Facilities Termination			UEP9E	M1GBC	18.58	22.14	15.25	8.45	3.91		30.89	7.03			
	Interoffice Channel mileage, per mile or fraction of mile			UEP9E	M1GBM	0.0174										
Feature Activations (DS0) Centrex Loops on Channelized DS1 Service																
D4 Channel Bank Feature Activations																
	Feature Activation on D-4 Channel Bank Centrex Loop Slot			UEP9E	1PQWS	0.66										
	Feature Activation on D-4 Channel Bank FX line Side Loop Slot			UEP9E	1PQW6	0.66										
	Feature Activation on D-4 Channel Bank FX Trunk Side Loop Slot			UEP9E	1PQW7	0.66										
	Feature Activation on D-4 Channel Bank Centrex Loop Slot - Different Wire Center			UEP9E	1PQWP	0.66										
	Feature Activation on D-4 Channel Bank Private Line Loop Slot			UEP9E	1PQWV	0.66										
	Feature Activation on D-4 Channel Bank Tjie Line/Trunk Loop Slot			UEP9E	1PQWQ	0.66										
	Feature Activation on D-4 Channel Bank WATS Loop Slot			UEP9E	1PQWA	0.66										
Non-Recurring Charges (NRC) Associated with UNE-P Centrex																
	NRC Conversion Currently Combined Switch-As-Is with allowed changes, per port			UEP9E	USAC2		1.03	0.29				30.89	7.03			
	New Centrex Standard Common Block			UEP9E	M1ACS	0.00	658.60					30.89	7.03			
	New Centrex Customized Common Block			UEP9E	M1ACC	0.00	658.60					30.89	7.03			
	NAR Establishment Charge, Per Occasion			UEP9E	URECA	0.00	68.57					30.89	7.03			
Additional Non-Recurring Charges (NRC)																
	Unbundled Miscellaneous Rate Element, Tag Loop at End Use Premise			UEP9E	URETL		8.33	0.83								
	Unbundled Miscellaneous Rate Element, Tag Design Loop at End Use Premise			UEP9E	URETN		11.23	1.10								
UNE-P CENTREX - DCO - Valid in AL, KY, LA, MS, & TN)																
2-Wire VG Loop/2-Wire Voice Grade Port (Centrex) Combo																
UNE Port/Loop Combination Rates (Non-Design)																
	2-Wire VG Loop/2-Wire Voice Grade Port (Centrex) Port Combo - Non-Design		1	UEP93		14.18										
	2-Wire VG Loop/2-Wire Voice Grade Port (Centrex)Port Combo - Non-Design		2	UEP93		18.01										
	2-Wire VG Loop/2-Wire Voice Grade Port (Centrex)Port Combo - Non-Design		3	UEP93		23.02										
UNE Port/Loop Combination Rates (Design)																
	2-Wire VG Loop/2-Wire Voice Grade Port (Centrex) Port Combo - Design		1	UEP93		18.26										

UNBUNDLED NETWORK ELEMENTS - Tennessee														Attachment: 1		Table 1	
CATEGORY	RATE ELEMENTS	Interim	Zone	BCS	USOC	RATES ($)					Svc Order Submitted Elec per LSR	Svc Order Submitted Manually per LSR	Incremental Charge - Manual Svc Order vs. Electronic-1st	Incremental Charge - Manual Svc Order vs. Electronic-Add'l	Incremental Charge - Manual Svc Order vs. Electronic-Disc 1st	Incremental Charge - Manual Svc Order vs. Electronic-Disc Add'l
						Rec	Nonrecurring		Nonrecurring Disconnect		OSS Rates ($)					
							First	Add'l	First	Add'l	SOMEC	SOMAN	SOMAN	SOMAN	SOMAN	SOMAN
	2-Wire VG Loop/2-Wire Voice Grade Port (Centrex)Port Combo - Design		2	UEP93		23.33										
	2-Wire VG Loop/2-Wire Voice Grade Port (Centrex)Port Combo - Design		3	UEP93		29.98										
UNE Loop Rate																
	2-Wire Voice Grade Loop (SL 1) - Zone 1		1	UEP93	UECS1	12.48										
	2-Wire Voice Grade Loop (SL 1) - Zone 2		2	UEP93	UECS1	16.31										
	2-Wire Voice Grade Loop (SL 1) - Zone 3		3	UEP93	UECS1	21.32										
	2-Wire Voice Grade Loop (SL 2) - Zone 1		1	UEP93	UECS2	16.56										
	2-Wire Voice Grade Loop (SL 2) - Zone 2		2	UEP93	UECS2	21.63										
	2-Wire Voice Grade Loop (SL 2) - Zone 3		3	UEP93	UECS2	28.28										
UNE Port Rate																
AL, KY, LA, MS, & TN only																
	2-Wire Voice Grade Port (Centrex) Basic Local Area			UEP93	UEPYA	1.70	22.14	15.25	8.45	3.91		30.89	7.03			
	2-Wire Voice Grade Port (Centrex 800 termination)Basic Local Area			UEP93	UEPYB	1.70	22.14	15.25	8.45	3.91		30.89	7.03			
	2-Wire Voice Grade Port (Centrex with Caller ID)1Basic Local Area			UEP93	UEPYH	1.70	22.14	15.25	8.45	3.91		30.89	7.03			
	2-Wire Voice Grade Port (Centrex from diff Serving Wire Center)2,3 Basic Local Area			UEP93	UEPYM	1.70	22.14	15.25	8.45	3.91		30.89	7.03			
	2-Wire Voice Grade Port, Diff Serving Wire Center - 2,3 - 800 Service Term - Basic Local Area			UEP93	UEPYZ	1.70	22.14	15.25	8.45	3.91		30.89	7.03			
	2-Wire Voice Grade Port terminated in on Megalink or equivalent - Basic Local Area			UEP93	UEPY9	1.70	22.14	15.25	8.45	3.91		30.89	7.03			
	2-Wire Voice Grade Port Terminated on 800 Service Term - Basic Local Area			UEP93	UEPY2	1.70	22.14	15.25	8.45	3.91		30.89	7.03			
	2-Wire Voice Grade Port (Centrex)			UEP93	UEPQA	1.70	22.14	15.25	8.45	3.91		30.89	7.03			
	2-Wire Voice Grade Port (Centrex 800 termination)			UEP93	UEPQB	1.70	22.14	15.25	8.45	3.91		30.89	7.03			
	2-Wire Voice Grade Port (Centrex with Caller ID)1			UEP93	UEPQH	1.70	22.14	15.25	8.45	3.91		30.89	7.03			
	2-Wire Voice Grade Port (Centrex from diff Serving Wire Center)2,3			UEP93	UEPQM	1.70	22.14	15.25	8.45	3.91		30.89	7.03			
	2-Wire Voice Grade Port, Diff Serving Wire Center - 2,3 -800 Service Term			UEP93	UEPQZ	1.70	22.14	15.25	8.45	3.91		30.89	7.03			
	2-Wire Voice Grade Port terminated in on Megalink or equivalent			UEP93	UEPQ9	1.70	22.14	15.25	8.45	3.91		30.89	7.03			
	2-Wire Voice Grade Port Terminated on 800 Service Term			UEP93	UEPQ2	1.70	22.14	15.25	8.45	3.91		30.89	7.03			
Local Switching																
	Centrex Intercom Funtionality, per port			UEP93	URECS	0.6381										
Local Number Portability																
	Local Number Portability (1 per port)			UEP93	LNPCC	0.35										
Features																
	All Standard Features Offered, per port			UEP93	UEPVF	0.00										
	All Centrex Control Features Offered, per port			UEP93	UEPVC	0.00										
NARS																
	Unbundled Network Access Register - Combination			UEP93	UARCX	0.00	0.00	0.00	0.00	0.00		0.00	7.03			
	Unbundled Network Access Register - Indial			UEP93	UAR1X	0.00	0.00	0.00	0.00	0.00		0.00	7.03			
	Unbundled Network Access Register - Outdial			UEP93	UAROX	0.00	0.00	0.00	0.00	0.00		0.00	7.03			
Miscellaneous Terminations																
2-Wire Trunk Side																
	Trunk Side Terminations, each			UEP93	CEND6	8.78	22.14	15.25	8.45	3.91		30.89	7.03			
4-Wire Digital (1.544 Megabits)																
	DS1 Circuit Terminations, each			UEP93	M1HD1	35.55	75.93	38.15				30.89	7.03			
	DS0 Channels Activated, Per Channel			UEP93	M1HDO	0.00	108.67					30.89	7.03			
Interoffice Channel Mileage - 2-Wire																
	Interoffice Channel Facilities Termination			UEP93	M1GBC	18.58	22.14	15.25	8.45	3.91		30.89	7.03			
	Interoffice Channel mileage, per mile or fraction of mile			UEP93	M1GBM	0.0174										
Feature Activations (DS0) Centrex Loops on Channelized DS1 Service																
D4 Channel Bank Feature Activations																
	Feature Activation on D-4 Channel Bank Centrex Loop Slot			UEP93	1PQWS	0.66										

UNBUNDLED NETWORK ELEMENTS - Tennessee														Attachment: 1		Table 1	
CATEGORY		RATE ELEMENTS	Interim	Zone	BCS	USOC	RATES ($)					Svc Order Submitted Elec per LSR	Svc Order Submitted Manually per LSR	Incremental Charge - Manual Svc Order vs. Electronic-1st	Incremental Charge - Manual Svc Order vs. Electronic-Add'l	Incremental Charge - Manual Svc Order vs. Electronic-Disc 1st	Incremental Charge - Manual Svc Order vs. Electronic-Disc Add'l
							Rec	Nonrecurring		Nonrecurring Disconnect		OSS Rates ($)					
								First	Add'l	First	Add'l	SOMEC	SOMAN	SOMAN	SOMAN	SOMAN	SOMAN
		Feature Activation on D-4 Channel Bank FX Line Side Loop Slot			UEP93	1PQW6	0.66										
		Feature Activation on D-4 Channel Bank FX Trunk Side Loop Slot			UEP93	1PQW7	0.66										
		Feature Activation on D-4 Channel Bank Centrex Loop Slot - Different Wire Center			UEP93	1PQWP	0.66										
		Feature Activation on D-4 Channel Bank Private Line Loop Slot			UEP93	1PQWV	0.66										
		Feature Activation on D-4 Channel Bank Tie Line/Trunk Loop Slot			UEP93	1PQWQ	0.66										
		Feature Activation on D-4 Channel Bank WATS Loop Slot			UEP93	1PQWA	0.66										
	Non-Recurring Charges (NRC) Associated with UNE-P Centrex																
		NRC Conversion Currently Combined Switch-As-Is with allowed changes, per port			UEP93	USAC2		1.03	0.29				30.89	7.03			
		New Centrex Standard Common Block			UEP93	M1ACS	0.00	658.60					30.89	7.03			
		New Centrex Customized Common Block			UEP93	M1ACC	0.00	658.60					30.89	7.03			
		NAR Establishment Charge, Per Occasion			UEP93	URECA		68.57					30.89	7.03			
	Additional Non-Recurring Charges (NRC)																
		Unbundled Miscellaneous Rate Element, Tag Loop at End Use Premise			UEP93	URETL		8.33	0.83								
		Unbundled Miscellaneous Rate Element, Tag Design Loop at End Use Premise			UEP93	URETN		11.23	1.10								
	Note 1 - Required Port for Centrex Control in 1AESS, 5ESS & EWSD																
	Note 2 - Requres Interoffice Channel Mileage																
	Note 3 - Installation is combination of Installation charge for SL2 Loop and Port																
	Note 4 - Requires Specific Customer Premises Equipment																
	Note: Rates displaying an "R" in Interim column are interim and subject to rate true-up as set forth in General Terms and Conditions.																

LOCAL INTERCONNECTION - Tennessee														Attachment: 1		Table 1	
CATEGORY	RATE ELEMENTS	Interim	Zone	BCS	USOC	RATES ($)					Svc Order Submitted Elec per LSR	Svc Order Submitted Manually per LSR	Incremental Charge - Manual Svc Order vs. Electronic-1st	Incremental Charge - Manual Svc Order vs. Electronic-Add'l	Incremental Charge - Manual Svc Order vs. Electronic-Disc 1st	Incremental Charge - Manual Svc Order vs. Electronic-Disc Add'l
						Rec	Nonrecurring First	Nonrecurring Add'l	Nonrecurring Disconnect First	Nonrecurring Disconnect Add'l	OSS Rates ($) SOMEC	SOMAN	SOMAN	SOMAN	SOMAN	SOMAN
LOCAL INTERCONNECTION (CALL TRANSPORT AND TERMINATION)																
NOTE: "bk" beside a rate indicates that the Parties have agreed to bill and keep for that element pursuant to the terms and conditions in Attachment 3.																
TANDEM SWITCHING																
	Tandem Switching Function Per MOU			OHD		0.0009778bk										
	Multiple Tandem Switching, per MOU (applies to intial tandem only)			OHD		0.0009778										
	Tandem Intermediary Charge, per MOU*			OHD		0.0025										
* This charge is applicable only to transit traffic and is applied in addition to applicable switching and/or interconnection charges.																
TRUNK CHARGE																
	Installation Trunk Side Service - per DS0			OHD	TPP6X		21.59	8.09								
	Installation Trunk Side Service - per DS0			OHD	TPP9X		21.59	8.09								
	Dedicated End Office Trunk Port Service-per DS0**			OHD	TDEOP	0.00										
	Dedicated End Office Trunk Port Service-per DS1**			OH1 OH1MS	TDE1P	0.00										
	Dedicated Tandem Trunk Port Service-per DS0**			OHD	TDWOP	0.00										
	Dedicated Tandem Trunk Port Service-per DS1**			OH1 OH1MS	TDW1P	0.00										
** This rate element is recovered on a per MOU basis and is included in the End Office Switching and Tandem Switching, per MOU rate elements																
COMMON TRANSPORT (Shared)																
	Common Transport - Per Mile, Per MOU			OHD		0.0000064bk										
	Common Transport - Facilities Termination Per MOU			OHD		0.0003871bk										
LOCAL INTERCONNECTION (DEDICATED TRANSPORT)																
INTEROFFICE CHANNEL - DEDICATED TRANSPORT																
	Interoffice Channel - Dedicated Transport - 2-Wire Voice Grade - Per Mile per month			OHM	1L5NF	0.0174										
	Interoffice Channel - Dedicated Transport- 2- Wire Voice Grade - Facility Termination per month			OHM	1L5NF	18.58	55.39	17.37	27.96	3.51						
	Interoffice Channel - Dedicated Transport - 56 kbps - per mile per month			OHM	1L5NK	0.0174										
	Interoffice Channel - Dedicated Transport - 56 kbps - Facility Termination per month			OHM	1L5NK	17.98	55.39	17.37	27.96	3.51						
	Interoffice Channel - Dedicated Transport - 64 kbps - per mile per month			OHM	1L5NK	0.0174										
	Interoffice Channel - Dedicated Transport - 64 kbps - Facility Termination per month			OHM	1L5NK	17.98	55.39	17.37	27.96	3.51						
	Interoffice Channel - Dedicated Channel - DS1 - Per Mile per month			OH1, OH1MS	1L5NL	0.3562										
	Interoffice Channel - Dedicated Tranport - DS1 - Facility Termination per month			OH1, OH1MS	1L5NL	77.86	112.40	76.27	19.55	14.99						
	Interoffice Channel - Dedicated Transport - DS3 - Per Mile per month			OH3, OH3MS	1L5NM	2.34										
	Interoffice Channel - Dedicated Transport - DS3 - Facility Termination per month			OH3, OH3MS	1L5NM	848.99	395.29	176.56	109.04	105.91						
LOCAL CHANNEL - DEDICATED TRANSPORT																
	Local Channel - Dedicated - 2-Wire Voice Grade per month			OHM	TEFV2	19.43	199.33	24.16	54.81	4.80						
	Local Channel - Dedicated - 4-Wire Voice Grade per month			OHM	TEFV4	20.56	201.53	24.83	55.52	5.51						
	Local Channel - Dedicated - DS1 per month			OH1	TEFHG	40.99	277.35	233.26	33.18	22.30						
	Local Channel - Dedicated - DS3 Facility Termination per month			OH3	TEFHJ	611.30	595.37	304.50	215.82	151.15						
LOCAL INTERCONNECTION MID-SPAN MEET																
NOTE: If Access service ride Mid-Span Meet, one-half the tariffed service Local Channel rate is applicable.																
	Local Channel - Dedicated - DS1 per month			OH1MS	TEFHG	0.00	0.00									
	Local Channel - Dedicated - DS3 per month			OH3MS	TEFHJ	0.00	0.00									
MULTIPLEXERS																
	Channelization - DS1 to DS0 Channel System			OH1, OH1MS	SATN1	80.77	141.87	77.11	44.47	42.62						
	DS3 to DS1 Channel System per month			OH3, OH3MS	SATNS	222.98	308.03	108.47	6.34	4.23						
	DS3 Interface Unit (DS1 COCI) per month			OH1, OH1MS	SATCO	17.58	6.07	4.66								
Notes: If no rate is identified in the contract, the rates, terms, and conditions for the specific service or function will be as set forth in applicable BellSouth tariff.																

Attachment 3

Network Elements and Other Services

TABLE OF CONTENTS

1 INTRODUCTION 3

2 UNBUNDLED LOOPS 7

3 LINE SHARING 30

4 LOCAL SWITCHING 37

5 UNBUNDLED NETWORK ELEMENT COMBINATIONS 45

6 TRANSPORT, CHANNELIZATION AND DARK FIBER 49

7 DATABASES 54

8 BELLSOUTH SWITCHED ACCESS (SWA) 8XX TOLL FREE DIALING TEN DIGIT SCREENING SERVICE 54

9 LINE INFORMATION DATABASE (LIDB) 55

10 SIGNALING 57

11 AUTOMATIC LOCATION IDENTIFICATION/DATA MANAGEMENT SYSTEM (ALI/DMS) 64

12 CALLING NAME (CNAM) DATABASE SERVICE 64

13 SERVICE CREATION ENVIRONMENT AND SERVICE MANAGEMENT SYSTEM (SCE/SMS) ADVANCED INTELLIGENT NETWORK (AIN) ACCESS 66

14 OPERATIONAL SUPPORT SYSTEMS (OSS) 66

Rates .....
Attachment A, Table 1

ACCESS TO NETWORK ELEMENTS AND OTHER SERVICES

1 Introduction

1.1 This Attachment sets forth rates, terms and conditions for Network Elements and combinations of Network Elements that BellSouth agrees to offer to Freedom Communications USA in accordance with its obligations under Section 251(c)(3) of the Act. Additionally, this Attachment sets forth the rates, terms and conditions for other facilities and services BellSouth makes available to Freedom Communications USA (Other Services). The rates for each Network Element and combination of Network Elements and Other Services are set forth in Attachment A, Table 1 of this Agreement. Additionally, the provision of a particular Network Element or Other Service may require Freedom Communications USA to purchase other Network Elements or services. In the event of a conflict between this Attachment and any other section or provision of this Agreement, the provisions of this Attachment shall control.

1.2 For purposes of this Agreement**, "**Network Element**"** is defined to mean a facility or equipment Freedom Communications USA used in the provision of a qualifying service, as defined by the FCC. Freedom Communications USA may not access a Network Element for the sole purpose of providing non-qualifying services as defined by the FCC. For purposes of this Agreement, combinations of Network Elements shall be referred to as "Combinations."

1.3 BellSouth shall, upon request of Freedom Communications USA, and to the extent technically feasible, provide to Freedom Communications USA access to its Network Elements for the provision of Freedom Communications USA's qualifying services. If no rate is identified in this Agreement, the rate will be as set forth in the applicable BellSouth tariff or as negotiated by the Parties upon request by either Party.

1.4 Freedom Communications USA may purchase and use Network Elements and Other Services from BellSouth in accordance with 47 C.F.R 51.309.

1.5 BellSouth shall comply with the requirements as set forth in the technical references within this Attachment 2.

1.6 To the extent any Network Elements, combinations of Network Elements, services or terms and conditions contained herein are based upon FCC rules and orders that are vacated by the DC Circuit Court of Appeals in an effective order, such Network Elements, combinations of Network Elements and services shall no longer be available pursuant to this Attachment. Upon the effective date of such order, Freedom Communications USA will not attempt to order any such Network Elements, combinations of Network Elements or services that are subject to the vacatur. BellSouth and Freedom Communications USA will work cooperatively

to transition the embedded base of such Network Elements, combinations of Network Elements and services to tariffed services or to services offered pursuant to a separate commercial agreement, provided that the appropriate tariff rate or rate set forth in such commercial agreement shall apply from the effective date of the vacatur. In the event Freedom Communications USA has not entered into a separate commercial agreement, or transitioned such services to a tariffed service, or if the parties are unable to agree on a transition schedule for the embedded base Network Elements, combinations of Network Elements or services within thirty (30) calendar days of the effective date of the vacatur, BellSouth may disconnect those Network Elements, combinations of Network Elements or services upon thirty (30) calendar days notice. If Freedom Communications USA has not entered into a commercial agreement necessary for certain Network Elements, combinations of Network Elements or services, and BellSouth disconnects such Network Elements, combinations of Network Elements or services pursuant to the preceding sentence, BellSouth's then current market rates shall apply to such Network Elements, combinations of Network Elements or services from the effective date of the vacatur until disconnection.

1.7 Upon request, BellSouth shall convert a wholesale service, or group of wholesale services, to the equivalent unbundled Network Element, or combination of elements that is available to Freedom Communications USA under Section 251(c)(3) of the Telecommunications Act of 1996. Nonrecurring switch-as-is rates for conversion of Network Elements are contained in Attachment A, Table 1 of this Agreement. Conversion of a wholesale service or group of wholesale services shall be considered termination for purposes of any volume and/or term commitments and/or grandfathered status between Freedom Communications USA and BellSouth. Any change from a wholesale service to a Network Element that requires a physical rearrangement of the Network Element will not be considered a conversion for purposes of this Agreement.

1.8 Except to the extent expressly provided otherwise in this Attachment, for Network Elements or combinations of Network Elements (collectively "Arrangements") that are no longer offered pursuant to, or are not in compliance with, the terms set forth in this Agreement (for example, but not limited to, local channels or non-compliant EELs), Freedom Communications USA will submit orders to rearrange, disconnect or convert those arrangements or services within thirty (30) calendar days of the last signature date of this Agreement. If orders to rearrange, disconnect or convert those Arrangements are not received by the thirty-first (31st) calendar day after the last signature date of this Agreement, BellSouth shall provide Freedom Communications USA notice of those Arrangements that are no longer offered pursuant to, or are not in compliance with, the terms set forth in this Agreement, and Freedom Communications USA shall submit orders to rearrange, disconnect or convert those Arrangements within sixteen (16) calendar days of the date of such notice from BellSouth. If Freedom Communications USA fails to submit orders to rearrange, disconnect or convert such Arrangements within

sixteen (16) calendar days of BellSouth's notice, BellSouth may disconnect those Arrangements without further notice.

1.8.1 In the event all orders to rearrange, disconnect or convert Arrangements are not received by the thirty-first (31st) calendar day after the last signature date of this Agreement, then 1) in the event no orders to rearrange, disconnect or convert an Arrangement are submitted prior to the thirtieth (30th) calendar day after BellSouth's notice, Freedom Communications USA shall pay BellSouth the rate BellSouth could have charged had Freedom Communications USA transitioned those Arrangements to another tariffed or contract service arrangement beginning on the Effective Date of this Agreement to the date orders to rearrange, disconnect or convert such Arrangements or services are actually completed; or 2) in the event orders to rearrange, disconnect or convert an Arrangement are submitted prior to the thirtieth (30th) calendar day after BellSouth's notice, Freedom Communications USA shall pay BellSouth the rate charged for such Arrangements under this Agreement until the date orders to rearrange, disconnect or convert such Arrangements or services are actually completed and the new rate applicable to such services as specified in BellSouth's tariffs or in a separate contract once the orders are actually completed. If Freedom Communications USA has failed to identify at least 98% of the Arrangements that are no longer offered pursuant to, or are not in compliance with, the terms set forth in this Agreement prior to the thirty-first (31st) calendar day after the last signature date of this Agreement, then Freedom Communications USA shall reimburse BellSouth for labor incurred in identifying such Network Elements or combinations of Network Elements pursuant to the rates set forth in the Access Tariff.

1.8.2 Where no re-termination or physical rearrangement of the Arrangement is required, Freedom Communications USA will be charged a non-recurring switch-as-is-charge established for the individual Network Elements(s) as set forth in Attachment A, Table 1. For arrangements that require a re-termination or other physical rearrangement of the Arrangement to comply with the terms of this Agreement, full non-recurring charges for the applicable Network Element from Attachment A, Table 1 of this Agreement will apply. To the extent an Arrangement requires re-termination or other physical rearrangement in order to comply with a tariff or separate agreement, the applicable rates, terms and conditions of such tariff or separate agreement shall apply. Freedom Communications USA shall be responsible for all applicable disconnection charges pursuant to this Agreement for Arrangements that are disconnected or rearranged pursuant to these Sections 1.8 – 1.8.1.

1.8.3 Freedom Communications USA may utilize Network Elements and Other Services to provide services as long as such services are consistent with industry standards and applicable BellSouth Technical References.

1.8.4 Except to the extent expressly provided otherwise in this Attachment, if a Network Element is not readily available but can be made available through routine network modifications, as defined by the FCC, Freedom Communications USA may request BellSouth to perform such routine network modifications. Each request will be handled as a project on an individual case basis. BellSouth will provide a price quote for the request, and upon receipt of payment by Freedom Communications USA, BellSouth shall perform the routine network modifications.

1.8.5 Notwithstanding any other provision of this Agreement, BellSouth will not commingle or combine Network Elements or combinations of Network Elements with any service, network element or other offering that it is obligated to make available only pursuant to Section 271 of the Act.

1.9 <u>Commingling of Services</u>

1.9.1 Commingling means the connecting, attaching, or otherwise linking of a Network Element, or a Network Element combination, to one or more telecommunications services or facilities that Freedom Communications USA has obtained at wholesale from BellSouth, or the combining of a Network Element or Network Element combination with one or more such wholesale telecommunications services or facilities.

1.9.2 Subject to the limitations set forth elsewhere in this Attachment, BellSouth shall not deny access to a Network Element or a combination of Network Elements on the grounds that one or more of the elements: 1) is connected to, attached to, linked to, or combined with such a facility or service obtained from BellSouth; or 2) shares part of BellSouth's network with access services or inputs for non-qualifying services.

1.9.3 BellSouth will not "ratchet" a commingled circuit. Unless otherwise agreed to by the Parties, the Network Element portion of such circuit will be billed at the rates set forth in this Agreement and the remainder of the circuit or service will be billed in accordance with BellSouth's tariffed rates.

1.9.4 When multiplexing equipment is attached to a commingled circuit, the multiplexing equipment will be billed from the same jurisdictional authorization (agreement or tariff) as the higher level of service and the Central Office Channel Interfaces will be billed from the same jurisdictional authorization (agreement or tariff) as the lower level of service.

1.10 If Freedom Communications USA reports a trouble on a Network Element or Other Service and no trouble actually exists on the BellSouth portion, BellSouth will charge Freedom Communications USA for any dispatching and testing (both inside and outside the Central Office (CO)) required by BellSouth in order to confirm the working status.

1.11 Rates

1.11.1 The prices that Freedom Communications USA shall pay to BellSouth for Network Elements and Other Services are set forth in Attachment A, Table 1 to this Attachment. If Freedom Communications USA purchases a service(s) from a tariff, all terms and conditions and rates as set forth in such tariff shall apply.

1.11.2 Rates, terms and conditions for order cancellation charges and Service Date Advancement Charges will apply in accordance with Attachment 6 and are incorporated herein by this reference.

1.11.3 If Freedom Communications USA modifies an order (Order Modification Charge (OMC)) after being sent a Firm Order Confirmation (FOC) from BellSouth, any costs incurred by BellSouth to accommodate the modification will be paid by Freedom Communications USA in accordance with FCC No. 1 Tariff, Section 5.

1.11.4 A one-month minimum billing period shall apply to all Network Elements and Other Services.

2 Unbundled Loops

2.1 General

2.1.1 The local loop Network Element (Loop) is defined as a transmission facility between a distribution frame (or its equivalent) in BellSouth's central office and the Loop demarcation point at an End User's customer premises, including inside wire owned by BellSouth. Facilities that do not terminate at a demarcation point at an End User customer premises, including, by way of example, but not limited to, facilities that terminate to another carrier's switch or premises, a cell site, Mobile Switching Center or base station, do not constitute Loops. The Loop Network Element includes all features, functions, and capabilities of the transmission facilities, including the network interface device, and attached electronics (except those used for the provision of advanced services, such as Digital Subscriber Line Access Multiplexers), optronics and intermediate devices (including repeaters and load coils) used to establish the transmission path to the End User's customer premises. Freedom Communications USA shall purchase the entire bandwidth of the Loop and, except as required herein or as otherwise agreed to by the Parties, BellSouth shall not subdivide the frequency of the Loop.

2.1.1.1 The Loop does not include any packet switched features, functions or capabilities.

2.1.1.2 In new build (Greenfield) areas, where BellSouth has only deployed Fiber To The Home (FTTH) facilities, BellSouth is under no obligation to provide Loops.

2.1.1.3 In FTTH overbuild situations where BellSouth also has copper Loops, BellSouth will make those copper Loops available to Freedom Communications USA on an

unbundled basis, until such time as BellSouth chooses to retire those copper Loops using the FCC's network disclosure requirements. In these cases, BellSouth will offer a 64kbps second voice grade channel over its FTTH facilities.

2.1.1.4 Furthermore, in FTTH overbuild areas, BellSouth is not obligated to ensure that copper Loops in that area are capable of transmitting signals prior to receiving a request for access to such Loops by Freedom Communications USA. If a request is received by BellSouth for a copper Loop, BellSouth will restore the copper Loop to serviceable condition if technically feasible. In these instances of Loop orders in an FTTH overbuild area, BellSouth's standard Loop provisioning interval will not apply, and the order will be handled on a project basis by which the Parties will negotiate the applicable provisioning interval.

2.1.1.5 For hybrid loops, where Freedom Communications USA seeks access to a hybrid loop for the provision of broadband services, BellSouth shall provide Freedom Communications USA with nondiscriminatory access to the time division multiplexing features, functions and capabilities of that hybrid loop, including DS1 or DS3, on an unbundled basis to establish a complete transmission path between BellSouth's central office and an End User's customer premises.

2.1.1.6 Freedom Communications USA may not purchase Loops or convert Special Access circuits to Loops if such Loops will be used to provide wireless telecommunications services.

2.1.2 The provisioning of a Loop to Freedom Communications USA's collocation space will require cross office cabling and cross connections within the central office to connect the Loop to a local switch or to other transmission equipment. These cross connects are separate components that are not considered a part of the Loop, and thus, have a separate charge.

2.1.3 Where facilities are available, BellSouth will install Loops in compliance with BellSouth's Products and Services Interval Guide available at the website at http://www.interconnection.bellsouth.com. For orders of fifteen (15) or more Loops, the installation and any applicable Order Coordination as described below will be handled on a project basis, and the intervals will be set by the BellSouth project manager for that order. When Loops require a Service Inquiry (SI) prior to issuing the order to determine if facilities are available, the interval for the SI process is separate from the installation interval.

2.1.4 The Loop shall be provided to Freedom Communications USA in accordance with BellSouth's TR73600 Unbundled Local Loop Technical Specification and applicable industry standard technical references.

2.1.5 BellSouth will only provision, maintain and repair the Loops to the standards that are consistent with the type of Loop ordered.

2.1.5.1 When a BellSouth technician is required to be dispatched to provision the Loop, BellSouth will tag the Loop with the Circuit ID number and the name of the ordering CLEC. When a dispatch is not required to provision the Loop, BellSouth will tag the Loop on the next required visit to the End User's location. If Freedom Communications USA wants to ensure the Loop is tagged during the provisioning process for Loops that may not require a dispatch (e.g. UVL-SL1, UVL-SL2, and UCL-ND), Freedom Communications USA may order Loop Tagging. Rates for Loop Tagging are as set forth in Attachment A, Table 1 of this Agreement.

2.1.5.2 In the event BellSouth must dispatch to the end-user's location more than once due to incorrect or incomplete information provided by Freedom Communications USA (e.g., incomplete address, incorrect contact name/number, etc.), BellSouth will bill Freedom Communications USA for each additional dispatch required to provision the circuit due to the incorrect/incomplete information provided. BellSouth will assess the applicable Trouble Determination rates from BellSouth's FCC or state tariffs.

2.1.6 **Loop Testing/Trouble Reporting**

2.1.6.1 Freedom Communications USA will be responsible for testing and isolating troubles on the Loops. Freedom Communications USA must test and isolate trouble to the BellSouth portion of a designed/non-designed unbundled Loop (e.g., UVL-SL2, UCL-D, UVL-SL1, UCL-ND, etc.) before reporting repair to the UNE Customer Wholesale Interconnection Network Services (CWINS) Center. Upon request from BellSouth at the time of the trouble report, Freedom Communications USA will be required to provide the results of the Freedom Communications USA test which indicate a problem on the BellSouth provided Loop.

2.1.6.2 Once Freedom Communications USA has isolated a trouble to the BellSouth provided Loop, and had issued a trouble report to BellSouth on the Loop, BellSouth will take the actions necessary to repair the Loop if a trouble actually exists. BellSouth will repair these Loops in the same time frames that BellSouth repairs similarly situated Loops to its End Users.

2.1.6.3 If Freedom Communications USA reports a trouble on a non-designed or designed Loop and no trouble actually exists, BellSouth will charge Freedom Communications USA for any dispatching and testing (both inside and outside the CO) required by BellSouth in order to confirm the Loop's working status.

2.1.6.4 In the event BellSouth must dispatch to the end-user's location more than once due to incorrect or incomplete information provided by Freedom Communications USA (e.g., incomplete address, incorrect contact name/number, etc.), BellSouth will bill Freedom Communications USA for each additional dispatch required to repair the circuit due to the incorrect/incomplete information provided. BellSouth

will assess the applicable Trouble Determination rates from BellSouth's FCC or state tariffs.

2.1.7 **Order Coordination and Order Coordination-Time Specific**

2.1.7.1 "Order Coordination" (OC) allows BellSouth and Freedom Communications USA to coordinate the installation of the SL2 Loops, Unbundled Digital Loops (UDL) and other Loops where OC may be purchased as an option, to Freedom Communications USA's facilities to limit End User service outage. OC is available when the Loop is provisioned over an existing circuit that is currently providing service to the End User. OC for physical conversions will be scheduled at BellSouth's discretion during normal working hours on the committed due date. OC shall be provided in accordance with the chart set forth below.

2.1.7.2 "Order Coordination – Time Specific" (OC-TS) allows Freedom Communications USA to order a specific time for OC to take place. BellSouth will make every effort to accommodate Freedom Communications USA's specific conversion time request. However, BellSouth reserves the right to negotiate with Freedom Communications USA a conversion time based on load and appointment control when necessary. This OC-TS is a chargeable option for all Loops except Unbundled Copper Loops (UCL) and is billed in addition to the OC charge. Freedom Communications USA may specify a time between 9:00 a.m. and 4:00 p.m. (location time) Monday through Friday (excluding holidays). If Freedom Communications USA specifies a time outside this window, or selects a time or quantity of Loops that requires BellSouth technicians to work outside normal work hours, overtime charges will apply in addition to the OC and OC-TS charges. Overtime charges will be applied based on the amount of overtime worked and in accordance with the rates established in the Access Services Tariff, Section E13.2, for each state. The OC-TS charges for an order due on the same day at the same location will be applied on a per Local Service Request (LSR) basis.

2.1.8 **CLEC to CLEC Conversions for Unbundled Loops**

2.1.8.1 The CLEC to CLEC conversion process for unbundled Loops may be used by Freedom Communications USA when converting an existing unbundled Loop from another CLEC for the same End User. The Loop type being converted must be included in Freedom Communications USA's Interconnection Agreement before requesting a conversion.

2.1.8.2 To utilize the CLEC to CLEC conversion process, the Loop being converted must be the same Loop type with no requested changes to the Loop, must serve the same End User location from the same serving wire center, and must not require an outside dispatch to provision.

2.1.8.3 The Loops converted to Freedom Communications USA pursuant to the CLEC to CLEC conversion process shall be provisioned in the same manner and with the

same functionality and options as described in this Attachment for the specific Loop type.

2.1.8.4

	Order Coordination (OC)	Order Coordination – Time Specific (OC-TS)	Test Points	DLR	Charge for Dispatch and Testing if No Trouble Found
SL-1 **(Non-Designed)**	Chargeable Option	Chargeable Option	Not available	Chargeable Option – ordered as Engineering Information Document	Charged for Dispatch inside and outside Central Office
UCL-ND **(Non-Designed)**	Chargeable Option	Not Available	Not Available	Chargeable Option – ordered as Engineering Information Document	Charged for Dispatch inside and outside Central Office
Unbundled Voice Loops - SL-2 (including 2- and 4-wire UVL) (Designed)	Included	Chargeable Option	Included	Included	Charged for Dispatch outside Central Office
Unbundled Digital Loop (Designed)	Included	Chargeable Option (except on Universal Digital Channel)	Included (where appropriate)	Included	Charged for Dispatch outside Central Office
Unbundled Copper Loop (Designed)	Chargeable in accordance with Section 2	Not available	Included	Included	Charged for Dispatch outside Central Office
For UVL-SL1 and UCLs, Freedom Communications USA must order and will be billed for both OC and OC-TS if requesting OC-TS.					

2.1.9 **<u>Bulk Migration</u>**

2.1.9.1 If Freedom Communications USA requests to migrate twenty-five (25) or more UNE-Port/Loop Combination (UNE-P) customers to UNE-Loop (UNE-L) in the same Central Office on the same due date, Freedom Communications USA must use the Bulk Migration process, which is described in the BellSouth CLEC Information Package, "UNE-Port/Loop Combination (UNE-P) to UNE-Loop (UNE-L) Bulk Migration." This CLEC Information package, incorporated herein by reference as it may be amended from time to time, is located at

www.interconnection.bellsouth.com/guides/html/unes.html. The rates for the Bulk Migration process shall be the nonrecurring rates associated with the Loop type being requested on the Bulk Migration, as set forth in Attachment A, Table 1 of this Agreement. Additionally, OSS charges will also apply per LSR generated per customer account as provided for in the Bulk Migration Request. The migration of loops from Integrated Digital Loop Carrier (IDLC) will be done pursuant to Section 2.6 of this Attachment.

2.1.10 **Ordering Guidelines and Processes**

2.1.10.1 For information regarding Ordering Guidelines and Processes for various UNEs, Freedom Communications USA should refer to the "Guides" section of the BellSouth Interconnection website, which is incorporated herein by reference, as amended from time to time. The website address is: http://www.interconnection.bellsouth.com/

2.1.10.2 Additional information may also be found in the individual CLEC Information Packages, as amended from time to time and which are incorporated herein by reference, located at the "CLEC UNE Products" website at the following address: http://www.interconnection.bellsouth.com/guides/html/unes.html

2.2 **Unbundled Voice Loops (UVLs)**

2.2.1 BellSouth shall make available the following UVLs:

2.2.1.1 2-wire Analog Voice Grade Loop – SL1 (Non-Designed)

2.2.1.2 2-wire Analog Voice Grade Loop – SL2 (Designed)

2.2.1.3 4-wire Analog Voice Grade Loop (Designed)

2.2.2 Unbundled Voice Loops (UVL) may be provisioned using any type of facility that will support voice grade services. This may include loaded copper, non-loaded copper, digital loop carrier systems, fiber/copper combination (hybrid loop) or a combination of any of these facilities. BellSouth, in the normal course of maintaining, repairing, and configuring its network, may also change the facilities that are used to provide any given voice grade circuit. This change may occur at any time. In these situations, BellSouth will only ensure that the newly provided facility will support voice grade services. BellSouth will not guarantee that Freedom Communications USA will be able to continue to provide any advanced services over the new facility. BellSouth will offer UVL in two different service levels - Service Level One (SL1) and Service Level Two (SL2).

2.2.3 Unbundled Voice Loop - SL1 (UVL-SL1) Loops are 2-wire Loop start circuits, will be non-designed, and will not have remote access test points. OC will be offered as a chargeable option on SL1 Loops when reuse of existing facilities has

been requested by Freedom Communications USA. Freedom Communications USA may also order OC-TS when a specified conversion time is requested. OC-TS is a chargeable option for any coordinated order and is billed in addition to the OC charge. An Engineering Information (EI) document can be ordered as a chargeable option. The EI document provides Loop Make-Up information which is similar to the information normally provided in a Design Layout Record (DLR). Upon issuance of a non-coordinated order in the service order system, SL1 Loops will be activated on the due date in the same manner and time frames that BellSouth normally activates POTS-type Loops for its End Users.

2.2.4 For an additional charge BellSouth will make available Loop Testing so that Freedom Communications USA may request further testing on new UVL-SL1 Loops. Rates for Loop Testing are as set forth in Attachment A, Table 1 of this Agreement.

2.2.5 Unbundled Voice Loop – SL2 (UVL-SL2) Loops may be 2-wire or 4-wire circuits, shall have remote access test points, and will be designed with a DLR provided to Freedom Communications USA. SL2 circuits can be provisioned with loop start, ground start or reverse battery signaling. OC is provided as a standard feature on SL2 Loops. The OC feature will allow Freedom Communications USA to coordinate the installation of the Loop with the disconnect of an existing customer's service and/or number portability service. In these cases, BellSouth will perform the order conversion with standard order coordination at its discretion during normal work hours.

2.3 **Unbundled Digital Loops**

2.3.1 BellSouth will offer Unbundled Digital Loops (UDL). UDLs are service specific, will be designed, will be provisioned with test points (where appropriate), and will come standard with OC and a DLR. The various UDLs are intended to support a specific digital transmission scheme or service.

2.3.2 BellSouth shall make available the following UDLs, subject to restrictions set forth herein:

2.3.2.1 2-wire Unbundled ISDN Digital Loop

2.3.2.2 2-wire Unbundled ADSL Compatible Loop

2.3.2.3 2-wire Unbundled HDSL Compatible Loop

2.3.2.4 4-wire Unbundled HDSL Compatible Loop

2.3.2.5 4-wire Unbundled DS1 Digital Loop

2.3.2.6 4-wire Unbundled Digital Loop/DS0 – 64 kbps, 56 kbps and below

2.3.2.7 DS3 Loop

2.3.2.8 STS-1 Loop

2.3.3 2-Wire Unbundled ISDN Digital Loops will be provisioned according to industry standards for 2-Wire Basic Rate ISDN services and will come standard with a test point, OC, and a DLR. Freedom Communications USA will be responsible for providing BellSouth with a Service Profile Identifier (SPID) associated with a particular ISDN-capable Loop and End User. With the SPID, BellSouth will be able to adequately test the circuit and ensure that it properly supports ISDN service.

2.3.3.1 Upon the Effective Date of this Agreement, Universal Digital Channel (UDC) elements will no longer be offered by BellSouth and no new orders for UDC will be accepted. Any existing UDCs that were provisioned prior to the Effective Date of this Agreement will be grandfathered at the rates set forth in the Parties' interconnection agreement that was in effect immediately prior to the Effective Date of this Agreement. Existing UDCs that were provisioned prior to the Effective Date of this Agreement may remain connected, maintained and repaired according to BellSouth's TR73600 until such time as they are disconnected by Freedom Communications USA or BellSouth provides ninety (90) calendar days notice that such UDC must be terminated. Freedom Communications USA may order an ISDN loop, if available, to provide the same functionality as the previously offered UDC product.

2.3.4 2-Wire ADSL-Compatible Loop. This is a designed Loop that is provisioned according to Revised Resistance Design (RRD) criteria and may be up to 18,000 feet long and may have up to 6,000 feet of bridged tap (inclusive of Loop length). The Loop is a 2-wire circuit and will come standard with a test point, OC, and a DLR.

2.3.5 2-Wire or 4-Wire HDSL-Compatible Loop. This is a designed Loop that meets Carrier Serving Area (CSA) specifications, may be up to 12,000 feet long and may have up to 2,500 feet of bridged tap (inclusive of Loop length). It may be a 2-wire or 4-wire circuit and will come standard with a test point, OC, and a DLR.

2.3.6 4-Wire Unbundled DS1 Digital Loop. This is a designed 4-wire Loop that is provisioned according to industry standards for DS1 or Primary Rate ISDN services and will come standard with a test point, OC, and a DLR. A DS1 Loop may be provisioned over a variety of loop transmission technologies including copper, HDSL-based technology or fiber optic transport systems. It will include a 4-Wire DS1 Network Interface at the End User's location.

2.3.7 4-Wire Unbundled Digital/DS0 Loop. These are designed 4-wire Loops that may be configured as 64kbps, 56kbps, 19kbps, and other sub-rate speeds associated with digital data services and will come standard with a test point, OC, and a DLR.

2.3.8 DS3 Loop**.** DS3 Loop is a two-point digital transmission path which provides for simultaneous two-way transmission of serial, bipolar, return-to-zero isochronous digital electrical signals at a transmission rate of 44.736 megabits per second (Mbps) that is dedicated to the use of the ordering CLEC in its provisioning of local exchange and associated exchange access services. It may provide transport for twenty-eight (28) DS1 channels, each of which provides the digital equivalent of twenty-four (24) analog voice grade channels. The interface to unbundled dedicated DS3 transport is a metallic-based electrical interface.

2.3.9 STS-1 Loop**.** STS-1 Loop is a high-capacity digital transmission path with SONET VT1.5 mapping that is dedicated for the use of the ordering customer for the purpose of provisioning local exchange and associated exchange access services. It is a two-point digital transmission path which provides for simultaneous two-way transmission of serial bipolar return-to-zero synchronous digital electrical signals at a transmission rate of 51.84 megabits per second (Mbps). It may provide transport for twenty-eight (28) DS1 channels, each of which provides the digital equivalent of twenty-four (24) analog voice grade channels. The interface to unbundled dedicated STS-1 transport is a metallic-based electrical interface.

2.3.10 Both DS3 Loop and STS-1 Loop require a Service Inquiry (SI) in order to ascertain availability.

2.3.11 If DS3/STS-1 Loops are not readily available but can be made available through routine network modifications, as defined by the FCC, Freedom Communications USA may request BellSouth to perform such routine network modifications. The request may not be used to place fiber. Each request will be handled as a project on an individual case basis. BellSouth will provide a price quote for the request, and upon receipt of payment by Freedom Communications USA, BellSouth shall perform the routine network modifications.

2.3.12 DS3 services come with a test point and a DLR. Mileage is airline miles, rounded up and a minimum of one mile applies. BellSouth TR 73501 LightGate® Service Interface and Performance Specifications, Issue D, June 1995 applies to DS3 services.

2.3.13 Freedom Communications USA may access a total capacity of two (2) DS3s per End User location at the Network Element rates set forth in Attachment A, Table 1.

2.4 **Unbundled Copper Loops (UCL)**

2.4.1 BellSouth shall make available Unbundled Copper Loops (UCLs). The UCL is a copper twisted pair Loop that is unencumbered by any intervening equipment (e.g., filters, load coils, range extenders, digital loop carrier, or repeaters) and is not

intended to support any particular telecommunications service. The UCL will be offered in two types – Designed and Non-Designed.

2.4.2 **Unbundled Copper Loop – Designed (UCL-D)**

2.4.2.1 The UCL-D will be provisioned as a dry copper twisted pair (2- or 4-wire) Loop that is unencumbered by any intervening equipment (e.g., filters, load coils, range extenders, digital loop carrier, or repeaters).

2.4.2.2 A UCL-D will be 18,000 feet or less in length and is provisioned according to Resistance Design parameters, may have up to 6,000 feet of bridged tap and will have up to 1300 Ohms of resistance.

2.4.2.3 The UCL-D is a designed circuit, is provisioned with a test point, and comes standard with a DLR. OC is a chargeable option for a UCL-D; however, OC is always required on UCLs where a reuse of existing facilities has been requested by Freedom Communications USA.

2.4.2.4 These Loops are not intended to support any particular services and may be utilized by Freedom Communications USA to provide a wide-range of telecommunications services as long as those services do not adversely affect BellSouth's network. This facility will include a Network Interface Device (NID) at the customer's location for the purpose of connecting the Loop to the customer's inside wire.

2.4.2.5 Upon the Effective Date of this Agreement, Unbundled Copper Loop – Long (UCL-L) elements will no longer be offered by BellSouth and no new orders for UCL-L will be accepted. Any existing UCL-Ls that were provisioned prior to the Effective Date of this Agreement will be grandfathered at the rates set forth in the Parties' interconnection agreement that was in effect immediately prior to the Effective Date of this Agreement. Existing UCL-Ls that were provisioned prior to the Effective Date of this Agreement may remain connected, maintained and repaired according to BellSouth's TR73600 and may remain connected until such time as they are disconnected by Freedom Communications USA or BellSouth provides ninety (90) calendar days notice that such UCL-L must be terminated.

2.4.3 **Unbundled Copper Loop – Non-Designed (UCL-ND)**

2.4.3.1 The UCL–ND is provisioned as a dedicated 2-wire metallic transmission facility from BellSouth's Main Distribution Frame (MDF) to a customer's premises (including the NID). The UCL-ND will be a "dry copper" facility in that it will not have any intervening equipment such as load coils, repeaters, or digital access main lines (DAMLs), and may have up to 6,000 feet of bridged tap between the End User's premises and the serving wire center. The UCL-ND typically will be 1300 Ohms resistance and in most cases will not exceed 18,000 feet in length, although the UCL-ND will not have a specific length limitation. For Loops less than 18,000

feet and with less than 1300 Ohms resistance, the Loop will provide a voice grade transmission channel suitable for Loop start signaling and the transport of analog voice grade signals. The UCL-ND will not be designed and will not be provisioned with either a DLR or a test point.

2.4.3.2 The UCL-ND facilities may be mechanically assigned using BellSouth's assignment systems. Therefore, the Loop Makeup (LMU) process is not required to order and provision the UCL-ND. However, Freedom Communications USA can request LMU for which additional charges would apply.

2.4.3.3 For an additional charge, BellSouth also will make available Loop Testing so that Freedom Communications USA may request further testing on the UCL-ND. Rates for Loop Testing are as set forth in Attachment A, Table 1 of this Agreement.

2.4.3.4 UCL-ND Loops are not intended to support any particular service and may be utilized by Freedom Communications USA to provide a wide-range of telecommunications services as long as those services do not adversely affect BellSouth's network. The UCL-ND will include a NID at the customer's location for the purpose of connecting the Loop to the customer's inside wire.

2.4.3.5 OC will be provided as a chargeable option and may be utilized when the UCL-ND provisioning is associated with the reuse of BellSouth facilities. OC-TS does not apply to this product.

2.4.3.6 Freedom Communications USA may use BellSouth's Unbundled Loop Modification (ULM) offering to remove excessive bridged taps and/or load coils from any copper Loop within the BellSouth network. Therefore, some Loops that would not qualify as UCL-ND could be transformed into Loops that do qualify, using the ULM process.

2.5 **Unbundled Loop Modifications (Line Conditioning)**

2.5.1 Line Conditioning is defined as routine network modification that BellSouth regularly undertakes to provide xDSL services to its own customers. This may include the removal of any device, from a copper Loop or copper Sub-loop that may diminish the capability of the Loop or Sub-loop to deliver high-speed switched wireline telecommunications capability, including xDSL service. Such devices include, but are not limited to, load coils, excessive bridged taps, low pass filters, and range extenders. Excessive bridged taps are bridged taps that serves no network design purpose and that are beyond the limits set according to industry standards and/or the BellSouth TR 73600.

2.5.2 BellSouth will remove load coils only on copper loops and sub-loops that are less than 18,000 feet in length.

2.5.3 For any copper loop being ordered by Freedom Communications USA which has over 6,000 feet of combined bridged tap will be modified, upon request from Freedom Communications USA, so that the loop will have a maximum of 6,000 feet of bridged tap. This modification will be performed at no additional charge to Freedom Communications USA. Loop conditioning orders that require the removal of bridged tap that serves no network design purpose on a copper loop that will result in a combined total of bridged tap between 2,500 and 6,000 feet will be performed at the rates set forth in Attachment A, Table 1 of this Agreement.

2.5.4 Freedom Communications USA may request removal of any unnecessary and non-excessive bridged tap (bridged tap between 0 and 2,500 feet which serves no network design purpose), at rates pursuant to BellSouth's Special Construction Process as mutually agreed to by the Parties.

2.5.5 Rates for ULM are as set forth in Attachment 1, Table 1 of this Agreement.

2.5.6 BellSouth will not modify a Loop in such a way that it no longer meets the technical parameters of the original Loop type (e.g., voice grade, ADSL, etc.) being ordered.

2.5.7 If Freedom Communications USA requests ULM on a reserved facility for a new loop order, BellSouth may perform a pair change and provision a different loop facility in lieu of the reserved facility with ULM if feasible. The loop provisioned will meet or exceed specifications of the requested loop facility as modified. Freedom Communications USA will not be charged for ULM if a different loop is provisioned. For loops that require a DLR or its equivalent, BellSouth will provide LMU detail of the loop provisioned.

2.5.8 Freedom Communications USA shall request Loop make up information pursuant to this Attachment prior to submitting a service inquiry and/or a LSR for the Loop type that Freedom Communications USA desires BellSouth to condition.

2.5.9 When requesting ULM for a Loop that BellSouth has previously provisioned for Freedom Communications USA, Freedom Communications USA will submit a service inquiry to BellSouth. If a spare Loop facility that meets the loop modification specifications requested by Freedom Communications USA is available at the location for which the ULM was requested, Freedom Communications USA will have the option to change the Loop facility to the qualifying spare facility rather than to provide ULM. In the event that BellSouth changes the Loop facility in lieu of providing ULM, Freedom Communications USA will not be charged for ULM but will only be charged the service order charges for submitting an order.

2.6 **Loop Provisioning Involving Integrated Digital Loop Carriers**

2.6.1 Where Freedom Communications USA has requested an Unbundled Loop and BellSouth uses IDLC systems to provide the local service to the End User and BellSouth has a suitable alternate facility available, BellSouth will make such alternative facilities available to Freedom Communications USA. If a suitable alternative facility is not available, then to the extent it is technically feasible, BellSouth will implement one of the following alternative arrangements for Freedom Communications USA (e.g. hairpinning):

1. Roll the circuit(s) from the IDLC to any spare copper that exists to the customer premises.
2. Roll the circuit(s) from the IDLC to an existing DLC that is not integrated.
3. If capacity exists, provide "side-door" porting through the switch.
4. If capacity exists, provide "Digital Access Cross Connect System (DACS)-door" porting (if the IDLC routes through a DACS prior to integration into the switch).

2.6.2 Arrangements 3 and 4 above require the use of a designed circuit. Therefore, non-designed Loops such as the SL1 voice grade and UCL-ND may not be ordered in these cases.

2.6.3 If no alternate facility is available, and upon request from Freedom Communications USA, and if agreed to by both Parties, BellSouth may utilize its Special Construction (SC) process to determine the additional costs required to provision facilities. Freedom Communications USA will then have the option of paying the one-time SC rates to place the Loop.

2.7 **Network Interface Device**

2.7.1 The NID is defined as any means of interconnection of the End User's customer premises wiring to BellSouth's distribution plant, such as a cross connect device used for that purpose. The NID is a single-line termination device or that portion of a multiple line termination device required to terminate a single line or circuit at the premises. The NID features two independent chambers or divisions that separate the service provider's network from the End User's customer premises wiring. Each chamber or division contains the appropriate connection points or posts to which the service provider and the End User each make their connections. The NID provides a protective ground connection and is capable of terminating cables such as twisted pair cable.

2.7.2 BellSouth shall permit Freedom Communications USA to connect Freedom Communications USA's Loop facilities to the End User's customer premises wiring through the BellSouth NID or at any other technically feasible point.

2.7.3 **Access to NID**

2.7.3.1 Freedom Communications USA may access the End User's customer premises wiring by any of the following means and Freedom Communications USA shall not

disturb the existing form of electrical protection and shall maintain the physical integrity of the NID:

2.7.3.1.1 BellSouth shall allow Freedom Communications USA to connect its Loops directly to BellSouth's multi-line residential NID enclosures that have additional space and are not used by BellSouth or any other telecommunications carriers to provide service to the premises.

2.7.3.1.2 Where an adequate length of the End User's customer premises wiring is present and environmental conditions permit, either Party may remove the customer premises wiring from the other Party's NID and connect such wiring to that Party's own NID;

2.7.3.1.3 Either Party may enter the subscriber access chamber or dual chamber NID enclosures for the purpose of extending a connect divisioned or spliced jumper wire from the customer premises wiring through a suitable "punch-out" hole of such NID enclosures; or

2.7.3.1.4 Freedom Communications USA may request BellSouth to make other rearrangements to the End User customer premises wiring terminations or terminal enclosure on a time and materials cost basis.

2.7.3.2 In no case shall either Party remove or disconnect the other Party's Loop facilities from either Party's NIDs, enclosures, or protectors unless the applicable Commission has expressly permitted the same and the disconnecting Party provides prior notice to the other Party. In such cases, it shall be the responsibility of the Party disconnecting Loop facilities to leave undisturbed the existing form of electrical protection and to maintain the physical integrity of the NID. It will be Freedom Communications USA's responsibility to ensure there is no safety hazard, and Freedom Communications USA will hold BellSouth harmless for any liability associated with the removal of the BellSouth Loop from the BellSouth NID. Furthermore, it shall be the responsibility of the disconnecting Party, once the other Party's Loop has been disconnected from the NID, to reconnect the disconnected Loop to a nationally recognized testing laboratory listed station protector, which has been grounded as per Article 800 of the National Electrical Code. If no spare station protector exists in the NID, the disconnected Loop must be appropriately cleared, capped and stored.

2.7.3.3 Freedom Communications USA shall not remove or disconnect ground wires from BellSouth's NIDs, enclosures, or protectors.

2.7.3.4 Freedom Communications USA shall not remove or disconnect NID modules, protectors, or terminals from BellSouth's NID enclosures.

2.7.3.5 Due to the wide variety of NID enclosures and outside plant environments, BellSouth will work with Freedom Communications USA to develop specific

procedures to establish the most effective means of implementing this section if the procedures set forth herein do not apply to the NID in question.

2.7.4 Technical Requirements

2.7.4.1 The NID shall provide an accessible point of interconnection and shall maintain a connection to ground.

2.7.4.2 If an existing NID is accessed, it shall be capable of transferring electrical analog or digital signals between the End User's customer premises and the distribution media and/or cross connect to Freedom Communications USA's NID.

2.7.4.3 Existing BellSouth NIDs will be provided in "as is" condition. Freedom Communications USA may request BellSouth to do additional work to the NID on a time and material basis. When Freedom Communications USA deploys its own local Loops in a multiple-line termination device, Freedom Communications USA shall specify the quantity of NID connections that it requires within such device.

2.8 **Sub-loop Elements**

2.8.1 Where facilities permit, BellSouth shall offer access to its Unbundled Sub-Loop (USL) elements as specified herein.

2.8.2 **Unbundled Sub-Loop Distribution**

2.8.2.1 The Unbundled Sub-Loop Distribution facility is a dedicated transmission facility that BellSouth provides from an End User's point of demarcation to a BellSouth cross-connect device. The BellSouth cross-connect device may be located within a remote terminal (RT) or a stand-alone cross-box in the field or in the equipment room of a building. The unbundled sub-loop distribution media is a copper twisted pair that can be provisioned as a 2-Wire or 4-Wire facility. BellSouth will make available the following sub-loop distribution offerings where facilities exist:

Unbundled Sub-Loop Distribution – Voice Grade
Unbundled Copper Sub-Loop
Unbundled Sub-Loop Distribution – Intrabuilding Network Cable (aka riser cable)

2.8.2.2 Unbundled Sub-Loop Distribution – Voice Grade (USLD-VG) is a copper sub-loop facility from the cross-box in the field up to and including the point of demarcation at the End User's premises and may have load coils.

2.8.2.3 Unbundled Copper Sub-Loop (UCSL) is a copper facility of any length provided from the cross-box in the field up to and including the End User's point of demarcation. If available, this facility will not have any intervening equipment such as load coils between the End User and the cross-box.

2.8.2.3.1 If Freedom Communications USA requests a UCSL and it is not available, Freedom Communications USA may request the copper Sub-Loop facility be modified pursuant to the ULM process to remove load coils and/or excessive bridged taps. If load coils and/or excessive bridged taps are removed, the facility will be classified as a UCSL.

2.8.2.4 Unbundled Sub-Loop Distribution – Intrabuilding Network Cable (USLD-INC) is the distribution facility owned or controlled by BellSouth inside a building or between buildings on the same property that is not separated by a public street or road. USLD-INC includes the facility from the cross connect device in the building equipment room up to and including the point of demarcation at the End User's premises.

2.8.2.4.1 Upon request for USLD-INC from Freedom Communications USA, BellSouth will install a cross connect panel in the building equipment room for the purpose of accessing USLD-INC pairs from a building equipment room. The cross-connect panel will function as a single point of interconnection (SPOI) for USLD-INC and will be accessible by multiple carriers as space permits. BellSouth will place cross-connect blocks in 25-pair increments for Freedom Communications USA's use on this cross-connect panel. Freedom Communications USA will be responsible for connecting its facilities to the 25-pair cross-connect block(s).

2.8.2.5 For access to Voice Grade USLD and UCSL, Freedom Communications USA shall install a cable to the BellSouth cross-box pursuant to the terms and conditions for physical collocation for remote sites set forth in this Agreement. This cable would be connected by a BellSouth technician within the BellSouth cross-box during the set-up process. Freedom Communications USA's cable pairs can then be connected to BellSouth's USL within the BellSouth cross-box by the BellSouth technician.

2.8.2.6 Through the SI process, BellSouth will determine whether access to Unbundled Sub-Loops at the location requested by Freedom Communications USA is technically feasible and whether sufficient capacity exists in the cross-box. If existing capacity is sufficient to meet Freedom Communications USA's request, then BellSouth will perform the site set-up as described in the CLEC Information Package, located at the website address: http://www.interconnection.bellsouth.com/products/html/unes.html.

2.8.2.7 The site set-up must be completed before Freedom Communications USA can order sub-loop pairs. For the site set-up in a BellSouth cross-connect box in the field, BellSouth will perform the necessary work to splice Freedom Communications USA's cable into the cross-connect box. For the site set-up inside a building equipment room, BellSouth will perform the necessary work to install the cross-connect panel and the connecting block(s) that will be used to provide access to the requested USLs.

2.8.2.8 Once the site set-up is complete, Freedom Communications USA will request sub-loop pairs through submission of a LSR form to the Local Carrier Service Center (LCSC). OC is required with USL pair provisioning when Freedom Communications USA requests reuse of an existing facility, and the Order Coordination charge shall be billed in addition to the USL pair rate. For expedite requests by Freedom Communications USA for sub-loop pairs, expedite charges will apply for intervals less than five (5) calendar days.

2.8.2.9 Unbundled Sub-Loops will be provided in accordance with technical reference TR73600.

2.8.3 **Unbundled Network Terminating Wire (UNTW)**

2.8.3.1 UNTW is unshielded twisted copper wiring that is used to extend circuits from an intra-building network cable terminal or from a building entrance terminal to an individual End User's point of demarcation. It is the final portion of the Loop that in multi-subscriber configurations represents the point at which the network branches out to serve individual subscribers.

2.8.3.2 This element will be provided in Multi-Dwelling Units (MDUs) and/or Multi-Tenants Units (MTUs) where either Party owns wiring all the way to the End User's premises. Neither Party will provide this element in locations where the property owner provides its own wiring to the End User's premises, where a third party owns the wiring to the End User's premises.

2.8.3.3 Requirements

2.8.3.3.1 On a multi-unit premises, upon request of the other Party (Requesting Party), the Party owning the network terminating wire (Provisioning Party) will provide access to UNTW pairs on an Access Terminal that is suitable for use by multiple carriers at each Garden Terminal or Wiring Closet.

2.8.3.3.2 The Provisioning Party shall not be required to install new or additional NTW beyond existing NTW to provision the services of the Requesting Party.

2.8.3.3.3 In existing MDUs and/or MTUs in which BellSouth does not own or control wiring (INC/NTW) to the End Users premises, Freedom Communications USA will install UNTW Access Terminals for BellSouth at no additional charge.

2.8.3.3.4 In situations in which BellSouth activates a UNTW pair, BellSouth will compensate Freedom Communications USA for each pair activated commensurate to the price specified in Freedom Communications USA's Agreement.

2.8.3.3.5 Upon receipt of the UNTW SI requesting access to the Provisioning Party's UNTW pairs at a multi-unit premises, representatives of both Parties will participate in a meeting at the site of the requested access. The purpose of the site

visit will include discussion of the procedures for installation and location of the Access Terminals. By request of the Requesting Party, an Access Terminal will be installed either adjacent to each of the Provisioning Party's Garden Terminal or inside each Wiring Closet. The Requesting Party will deliver and connect its central office facilities to the UNTW pairs within the Access Terminal. The Requesting Party may access any available pair on an Access Terminal. A pair is available when a pair is not being utilized to provide service or where the End User has requested a change in its local service provider to the Requesting Party. Prior to connecting the Requesting Party's service on a pair previously used by the Provisioning Party, the Requesting Party is responsible for ensuring the End User is no longer using the Provisioning Party's service or another CLEC's service before accessing UNTW pairs.

2.8.3.3.6 Access Terminal installation intervals will be established on an individual case basis.

2.8.3.3.7 The Requesting Party is responsible for obtaining the property owner's permission for the Provisioning Party to install an Access Terminal(s) on behalf of the Requesting Party. The submission of the SI by the Requesting Party will serve as certification by the Requesting Party that such permission has been obtained. If the property owner objects to Access Terminal installations that are in progress or subsequent to completion and demands removal of Access Terminals, the Requesting Party will be responsible for costs associated with removing Access Terminals and restoring the property to its original state prior to Access Terminals being installed.

2.8.3.3.8 The Requesting Party shall indemnify and hold harmless the Provisioning Party against any claims of any kind that may arise out of the Requesting Party's failure to obtain the property owner's permission. The Requesting Party will be billed for nonrecurring and recurring charges for accessing UNTW pairs at the time the Requesting Party activates the pair(s). The Requesting Party will notify the Provisioning Party within five (5) business days of activating UNTW pairs using the LSR form.

2.8.3.3.9 If a trouble exists on a UNTW pair, the Requesting Party may use an alternate spare pair that serves that End User if a spare pair is available. In such cases, the Requesting Party will re-terminate its existing jumper from the defective pair to the spare pair. Alternatively, the Requesting Party will isolate and report troubles in the manner specified by the Provisioning Party. The Requesting Party must tag the UNTW pair that requires repair. If the Provisioning Party dispatches a technician on a reported trouble call and no UNTW trouble is found, the Provisioning Party will charge Requesting Party for time spent on the dispatch and testing the UNTW pair(s).

2.8.3.3.10 If the Requesting Party initiates the Access Terminal installation and the Requesting Party has not activated at least ten (10) percent of the capacity of the

Access Terminal installed pursuant to the Requesting Party's request for an Access Terminal within six (6) months of installation of the Access Terminal, the Provisioning Party will bill the Requesting Party a nonrecurring charge equal to the actual cost of provisioning the Access Terminal.

2.8.3.3.11 If the Provisioning Party determines that the Requesting Party is using the UNTW pairs without reporting the activation of the pairs, the Requesting Party will be billed for the use of that pair back to the date the End User began receiving service from the Requesting Party at that location. Upon request, the Requesting Party will provide copies of its billing record to substantiate such date. If the Requesting Party fails to provide such records, then the Provisioning Party will bill the Requesting Party back to the date of the Access Terminal installation.

2.8.4 **Unbundled Sub-Loop Feeder**

2.8.4.1 Upon the Effective Date of this Agreement, Unbundled Sub-Loop Feeder (USLF) elements will no longer be offered by BellSouth at TELRIC prices. Within ninety (90) calendar days of the Effective Date of this Agreement, Freedom Communications USA will either negotiate market-based rates for these elements or will issue orders to have these elements disconnected. If, after this ninety (90)-day period, market-based rates have not been negotiated and Freedom Communications USA has not issued the appropriate disconnect orders, BellSouth may immediately disconnect any remaining USLF elements and will bill Freedom Communications USA any applicable disconnect charges.

2.8.5 **Unbundled Loop Concentration**

2.8.5.1 Upon the Effective Date of this Agreement, the Unbundled Loop Concentration (ULC) element will no longer be offered by BellSouth and no new orders for ULC will be accepted. Any existing ULCs that were provisioned prior to the Effective Date of this Agreement will be grandfathered at the rates set forth in the Parties' interconnection agreement that was in effect immediately prior to this Agreement and may remain connected, maintained and repaired according to BellSouth's TR73600 until such time as they are disconnected by Freedom Communications USA, or BellSouth provides ninety (90) calendar days notice that such ULC must be terminated.

2.8.6 **Dark Fiber Loop**

2.8.6.1 Dark Fiber Loop is an unused optical transmission facility, without attached signal regeneration, multiplexing, aggregation or other electronics, from the demarcation point at an End User's premises to the End User's serving wire center. Dark Fiber Loops may be strands of optical fiber existing in aerial or underground structure. BellSouth will not provide line terminating elements, regeneration or other electronics necessary for Freedom Communications USA to utilize Dark Fiber Loops.

2.8.6.2 If Dark Fiber Loop is not readily available but can be made available through routine network modifications, as defined by the FCC, Freedom Communications USA may request BellSouth to perform such routine network modifications. The request may not be used to place fiber. Each request will be handled as a project on an individual case basis. BellSouth will provide a price quote for the request, and upon receipt of payment by Freedom Communications USA, BellSouth shall perform the routine network modifications.

2.8.6.3 Requirements

2.8.6.3.1 BellSouth shall make available Dark Fiber Loop where it exists in BellSouth's network and where, as a result of future building or deployment, it becomes available. Dark Fiber Loop will not be deemed available if: (1) it is used by BellSouth for maintenance and repair purposes; (2) it is designated for use pursuant to a firm order placed by another customer; (3) it is restricted for use by all carriers, including BellSouth, because of transmission problems or because it is scheduled for removal due to documented changes to roads and infrastructure; or (4) BellSouth has plans to use the fiber within a two-year planning period. BellSouth is not required to place the fiber for Dark Fiber Loop if none is available.

2.8.6.3.2 Freedom Communications USA is solely responsible for testing the quality of the Dark Fiber to determine its usability and performance specifications.

2.8.6.3.3 BellSouth shall use its commercially reasonable efforts to provide to Freedom Communications USA information regarding the location, availability and performance of Dark Fiber Loop within ten (10) business days after receiving a SI from Freedom Communications USA.

2.8.6.3.4 If the requested Dark Fiber Loop is available, BellSouth shall use commercially reasonable efforts to provision the Dark Fiber Loop to Freedom Communications USA within twenty (20) business days after Freedom Communications USA submits a valid, error free LSR. Provisioning includes identification of appropriate connection points (e.g., Light Guide Interconnection (LGX)) to enable Freedom Communications USA to connect Freedom Communications USA provided transmission media (e.g., optical fiber) or equipment to the Dark Fiber Loop.

2.9 **Loop Makeup**

2.9.1 Description of Service

2.9.1.1 BellSouth shall make available to Freedom Communications USA LMU information so that Freedom Communications USA can make an independent judgment about whether the Loop is capable of supporting the advanced services equipment Freedom Communications USA intends to install and the services Freedom Communications USA wishes to provide. This section addresses LMU

as a preordering transaction, distinct from Freedom Communications USA ordering any other service(s). Loop Makeup Service Inquiries (LMUSI) and mechanized LMU queries for preordering LMU are likewise unique from other preordering functions with associated SIs as described in this Agreement.

2.9.1.2 BellSouth will provide Freedom Communications USA LMU information consisting of the composition of the Loop material (copper/fiber); the existence, location and type of equipment on the Loop, including but not limited to digital loop carrier or other remote concentration devices, feeder/distribution interfaces, bridged taps, load coils, pair-gain devices; the Loop length; the wire gauge and electrical parameters.

2.9.1.3 BellSouth's LMU information is provided to Freedom Communications USA as it exists either in BellSouth's databases or in its hard copy facility records. BellSouth does not guarantee accuracy or reliability of the LMU information provided.

2.9.1.4 BellSouth's provisioning of LMU information to the requesting CLEC for facilities is contingent upon either BellSouth or the requesting CLEC controlling the Loop(s) that serve the service location for which LMU information has been requested by the CLEC. The requesting CLEC is not authorized to receive LMU information on a facility used or controlled by another CLEC unless BellSouth receives a Letter of Authorization (LOA) from the voice CLEC (owner) or its authorized agent on the LMUSI submitted by the requesting CLEC.

2.9.1.5 Freedom Communications USA may choose to use equipment that it deems will enable it to provide a certain type and level of service over a particular BellSouth Loop as long as that equipment does not disrupt other services on the BellSouth network. The determination shall be made solely by Freedom Communications USA and BellSouth shall not be liable in any way for the performance of the advanced data services provisioned over said Loop. The specific Loop type (ADSL, HDSL, or otherwise) ordered on the LSR must match the LMU of the Loop reserved taking into consideration any requisite line conditioning. The LMU data is provided for informational purposes only and does not guarantee Freedom Communications USA's ability to provide advanced data services over the ordered Loop type. Further, if Freedom Communications USA orders Loops that do not require a specific facility medium (i.e. copper only) or Loops that are not intended to support advanced services (such as UV-SL1, UV-SL2, or ISDN compatible Loops) and that are not inventoried as advanced services Loops, the LMU information for such Loops is subject to change at any time due to modifications and/or upgrades to BellSouth's network. Freedom Communications USA is fully responsible for any of its service configurations that may differ from BellSouth's technical standard for the Loop type ordered.

2.9.2 **Submitting Loop Makeup Service Inquiries**

2.9.2.1 Freedom Communications USA may obtain LMU information by submitting a mechanized LMU query or a Manual LMUSI. Mechanized LMUs should be submitted through BellSouth's OSS interfaces. After obtaining the Loop information from the mechanized LMU process, if Freedom Communications USA needs further Loop information in order to determine Loop service capability, Freedom Communications USA may initiate a separate Manual Service Inquiry for a separate nonrecurring charge as set forth in Attachment A, Table 1 of this Agreement.

2.9.2.2 Manual LMUSIs shall be submitted according to the guidelines in the LMU CLEC Information Package, incorporated herein by reference, as it may be amended from time to time, which can be found at the following BellSouth website: http://interconnection.bellsouth.com/guides/html/unes.html . The service interval for the return of a Manual LMUSI is three (3) business days. Manual LMUSIs are not subject to expedite requests. This service interval is distinct from the interval applied to the subsequent service order.

2.9.3 **Loop Reservations**

2.9.3.1 For a Mechanized LMUSI, Freedom Communications USA may reserve up to ten (10) Loop facilities. For a Manual LMUSI, Freedom Communications USA may reserve up to three (3) Loop facilities.

2.9.3.2 Freedom Communications USA may reserve facilities for up to four (4) business days for each facility requested through LMU from the time the LMU information is returned to Freedom Communications USA. During and prior to Freedom Communications USA placing an LSR, the reserved facilities are rendered unavailable to other customers, including BellSouth. If Freedom Communications USA does not submit an LSR for a UNE service on a reserved facility within the four (4)-day reservation timeframe, the reservation of that spare facility will become invalid and the facility will be released.

2.9.3.3 Charges for preordering Manual LMUSI or Mechanized LMU are separate from any charges associated with ordering other services from BellSouth.

2.9.3.4 All LSRs issued for reserved facilities shall reference the facility reservation number as provided by BellSouth. Freedom Communications USA will not be billed any additional LMU charges for the Loop ordered on such LSR. If, however, Freedom Communications USA does not reserve facilities upon an initial LMUSI, Freedom Communications USA's placement of an order for an advanced data service type facility will incur the appropriate billing charges to include SI and reservation per Attachment A, Table 1 of this Agreement.

2.9.3.5 Where Freedom Communications USA has reserved multiple Loop facilities on a single reservation, Freedom Communications USA may not specify which facility shall be provisioned when submitting the LSR. For those occasions, BellSouth

will assign to Freedom Communications USA, subject to availability, a facility that meets the BellSouth technical standards of the BellSouth type Loop as ordered by Freedom Communications USA.

3 Line Sharing

3.1 General

3.1.1 Line Sharing is defined as the process by which Freedom Communications USA provides digital subscriber line service over the same copper loop that BellSouth uses to provide voice service, with BellSouth using the low frequency portion of the loop and Freedom Communications USA using the high frequency spectrum (as defined below) of the loop.

3.1.2 Line Sharing arrangements in service as of October 1, 2003, will be grandfathered until the earlier of the date the End User discontinues or moves service with Freedom Communications USA. Grandfathered arrangements pursuant to this Section will be billed at the rates set forth in Exhibit A.

3.1.3 For the period from October 2, 2003, through October 1, 2004, Freedom Communications USA may request new Line Sharing arrangements. For Line Sharing arrangements placed in service between October 2, 2003, and October 1, 2004, the rates will be as set forth in Exhibit A. After October 1, 2004, Freedom Communications USA may not request new Line Sharing arrangements under the terms of this Agreement.

3.1.4 The rates set forth herein will be applied retroactively back to the date set forth in the Triennial Review Order.

3.1.5 As of the earlier of October 2, 2006, or the date that the End User discontinues or moves service with Freedom Communications USA, all Line Sharing arrangements pursuant to Section 3.1.3 of this Attachment shall be terminated.

3.1.6 The High Frequency Spectrum is defined as the frequency range above the voiceband on a copper Loop facility carrying analog circuit-switched voiceband transmissions. Access to the High Frequency Spectrum is intended to allow Freedom Communications USA the ability to provide Digital Subscriber Line (xDSL) data services to the End User for which BellSouth provides voice services. The High Frequency Spectrum shall be available for any version of xDSL complying with Spectrum Management Class 5 of ANSI T1.417, American National Standard for Telecommunications, Spectrum Management for Loop Transmission Systems. BellSouth will continue to have access to the low frequency portion of the Loop spectrum (from 300 Hertz to at least 3000 Hertz, and potentially up to 3400 Hertz, depending on equipment and facilities) for the purposes of providing voice service. Freedom Communications USA shall only

use xDSL technology that is within the PSD mask for Spectrum Management Class 5 as found in the above-mentioned document.

3.1.7 Access to the High Frequency Spectrum requires an unloaded, 2-wire copper Loop. An unloaded Loop is a copper Loop with no load coils, low-pass filters, range extenders, DAMLs, or similar devices and minimal bridged taps consistent with ANSI T1.413 and T1.601.

3.1.8 BellSouth will provide Loop Modification to Freedom Communications USA on an existing Loop in accordance with procedures as specified in Section 2 of this Attachment. BellSouth is not required to modify a Loop for access to the High Frequency spectrum if modification of that Loop significantly degrades BellSouth's voice service. If Freedom Communications USA requests that BellSouth modify a Loop and such modification significantly degrades the voice services on the Loop, Freedom Communications USA shall pay for the Loop to be restored to its original state.

3.1.9 Line Sharing shall only be available on Loops on which BellSouth is also providing, and continues to provide, analog voice service directly to the End User. In the event the End User terminates its BellSouth provided voice service for any reason, or in the event BellSouth disconnects the End User's voice service pursuant to its tariffs or applicable law, and Freedom Communications USA desires to continue providing xDSL service on such Loop, Freedom Communications USA shall be required to purchase a full stand-alone Loop UNE. To the extent commercially practicable, BellSouth shall give Freedom Communications USA notice in a reasonable time prior to disconnect, which notice shall give Freedom Communications USA an adequate opportunity to notify BellSouth of its intent to purchase such Loop. In those cases in which BellSouth no longer provides voice service to the End User and Freedom Communications USA purchases the full stand-alone Loop, Freedom Communications USA may elect the type of Loop it will purchase. Freedom Communications USA will pay the appropriate recurring and nonrecurring rates for such Loop as set forth in Exhibit A to this Attachment. In the event Freedom Communications USA purchases a voice grade Loop, Freedom Communications USA acknowledges that such Loop may not remain xDSL compatible.

3.1.10 If Freedom Communications USA reports a trouble on the High Frequency Spectrum of a Loop and no trouble actually exists on the BellSouth portion, BellSouth will charge Freedom Communications USA for any dispatching and testing (both inside and outside the CO) required by BellSouth in order to confirm the working status. The rates charged for no trouble found (NTF) shall be as set forth in Attachment A, Table 1 of this Agreement.

3.1.11 Only one CLEC shall be permitted access to the High Frequency Spectrum of any particular Loop.

3.2 **Provisioning of Line Sharing and Splitter Space**

3.2.1 BellSouth will provide Freedom Communications USA with access to the High Frequency Spectrum as follows:

3.2.1.1 To order High Frequency Spectrum on a particular Loop, Freedom Communications USA must have a Digital Subscriber Line Access Multiplexer (DSLAM) collocated in the central office that serves the End User of such Loop.

3.2.1.2 Freedom Communications USA may provide its own splitters or may order splitters in a central office once it has installed its DSLAM in that central office. BellSouth will install splitters within thirty-six (36) calendar days of Freedom Communications USA's submission of an error free Line Splitter Ordering Document (LSOD) to the BellSouth Complex Resale Support Group.

3.2.1.3 Once a splitter is installed on behalf of Freedom Communications USA in a central office in which Freedom Communications USA is located, Freedom Communications USA shall be entitled to order the High Frequency Spectrum on lines served out of that central office. BellSouth will bill and Freedom Communications USA shall pay the electronic or manual ordering charges as applicable when Freedom Communications USA orders High Frequency Spectrum for End User service.

3.2.1.4 BellSouth shall test the data portion of the Loop to ensure the continuity of the wiring for Freedom Communications USA's data.

3.3 **BellSouth Provided Splitter – Line Sharing**

3.3.1 BellSouth will select, purchase, install, and maintain a central office POTS splitter and provide Freedom Communications USA access to data ports on the splitter. The splitter will route the High Frequency Spectrum on the circuit to Freedom Communications USA's xDSL equipment in Freedom Communications USA's collocation space. At least thirty (30) calendar days before making a change in splitter suppliers, BellSouth will provide Freedom Communications USA with a carrier notification letter, informing Freedom Communications USA of change. Freedom Communications USA shall purchase ports on the splitter in increments of eight (8), twenty-four (24), or ninety-six (96) ports in Alabama, Florida, Georgia, Kentucky, Louisiana, Mississippi, North Carolina and South Carolina. Freedom Communications USA shall purchase ports on the splitter in increments of twenty-four (24) or ninety-six (96) ports in Tennessee.

3.3.2 BellSouth will install the splitter in (i) a common area close to Freedom Communications USA's collocation area, if possible; or (ii) in a BellSouth relay rack as close to Freedom Communications USA's DS0 termination point as possible. Freedom Communications USA shall have access to the splitter for test purposes, regardless of where the splitter is placed in the BellSouth premises. For

purposes of this section, a common area is defined as an area in the central office in which both Parties have access to a common test access point. A Termination Point is defined as the point of termination for Freedom Communications USA on the main distributing frame in the central office and is not the demarcation point set forth in Attachment 4 of this Agreement. BellSouth will cross-connect the splitter data ports to a specified Freedom Communications USA DS0 at such time that a Freedom Communications USA End User's service is established.

3.4 **CLEC Provided Splitter – Line Sharing**

3.4.1 Freedom Communications USA may at its option purchase, install and maintain central office POTS splitters in its collocation arrangements. Freedom Communications USA may use such splitters for access to its customers and to provide digital line subscriber services to its customers using the High Frequency Spectrum. Existing Collocation rules and procedures and the terms and conditions relating to Collocation set forth in Attachment 4-Central Office shall apply.

3.4.2 Any splitters installed by Freedom Communications USA in its collocation arrangement shall comply with ANSI T1.413, Annex E, or any future ANSI splitter Standards. Freedom Communications USA may install any splitters that BellSouth deploys or permits to be deployed for itself or any BellSouth affiliate.

3.5 **Ordering – Line Sharing**

3.5.1 Freedom Communications USA shall use BellSouth's LSOD to order splitters from BellSouth and to activate and deactivate DS0 Collocation Connecting Facility Assignments (CFA) for use with High Frequency Spectrum.

3.5.2 BellSouth will provide Freedom Communications USA the LSR format to be used when ordering the High Frequency Spectrum.

3.5.3 BellSouth will provision High Frequency Spectrum in compliance with BellSouth's Products and Services Interval Guide available at the website at http://www.interconnection.bellsouth.com.

3.5.4 BellSouth will provide Freedom Communications USA access to Preordering LMU in accordance with the terms of this Agreement. BellSouth shall bill and Freedom Communications USA shall pay the rates for such services, as described in Exhibit A.

3.6 **Maintenance and Repair – Line Sharing**

3.6.1 Freedom Communications USA shall have access for repair and maintenance purposes to any Loop for which it has access to the High Frequency Spectrum. If Freedom Communications USA is using a BellSouth owned splitter, Freedom Communications USA may access the Loop at the point where the combined voice

and data signal exits the central office splitter via a bantam test jack. If Freedom Communications USA provides its own splitter, it may test from the collocation space or the Termination Point.

3.6.2 BellSouth will be responsible for repairing voice services and the physical line between the NID at the customer's premises and the Termination Point. Freedom Communications USA will be responsible for repairing data services. Each Party will be responsible for maintaining its own equipment.

3.6.3 Freedom Communications USA shall inform its End Users to direct data problems to Freedom Communications USA, unless both voice and data services are impaired, in which event the End Users should call BellSouth.

3.6.4 Once a Party has isolated a trouble to the other Party's portion of the Loop, the Party isolating the trouble shall notify the End User that the trouble is on the other Party's portion of the Loop.

3.6.5 Notwithstanding anything else to the contrary in this Agreement, when BellSouth receives a voice trouble and isolates the trouble to the physical collocation arrangement belonging to Freedom Communications USA, BellSouth will notify Freedom Communications USA. Freedom Communications USA will provide at least one but no more than two (2) verbal CFA pair changes to BellSouth in an attempt to resolve the voice trouble. In the event a CFA pair change resolves the voice trouble, Freedom Communications USA will provide BellSouth an LSR with the new CFA pair information within twenty-four (24) hours. If the owner of the collocation space fails to resolve the trouble by providing BellSouth with the verbal CFA pair changes, BellSouth may discontinue Freedom Communications USA's access to the High Frequency Spectrum on such Loop. BellSouth will not be responsible for any loss of data as a result of this action.

3.7 **Line Splitting**

3.7.1 Line splitting allows a provider of data services (a Data LEC) and a provider of voice services (a Voice CLEC) to deliver voice and data service to End Users over the same Loop. The Voice CLEC and Data LEC may be the same or different carriers.

3.7.2 In the event Freedom Communications USA provides its own switching or obtains switching from a third party, Freedom Communications USA may engage in line splitting arrangements with another CLEC using a splitter, provided by Freedom Communications USA, in a Collocation Arrangement at the central office where the loop terminates into a distribution frame or its equivalent.

3.7.3 Where Freedom Communications USA is purchasing a UNE-port and a UNE-loop, BellSouth shall offer line splitting pursuant to the following sections in this Attachment.

3.7.4 Freedom Communications USA shall provide BellSouth with a signed LOA between it and the Data LEC or Voice CLEC with which it desires to provision Line Splitting services, if Freedom Communications USA will not provide voice and data services.

3.7.5 End Users currently receiving voice service from a Voice CLEC through a UNE-P may be converted to Line Splitting arrangements by Freedom Communications USA or its authorized agent ordering Line Splitting Service. If the CLEC wishes to provide the splitter, the UNE-P arrangement will be converted to a stand-alone UNE Loop, a UNE port, two collocation cross connects and the high frequency spectrum line activation. If BellSouth owns the splitter, the UNE-P arrangement will be converted to a stand-alone UNE Loop, port, and one collocation cross connection.

3.7.6 When End Users on Loops using High Frequency Spectrum CO Based line sharing service are converted to Line Splitting, BellSouth will discontinue billing Freedom Communications USA for the High Frequency Spectrum. BellSouth will continue to bill the Data LEC for all associated splitter charges if the Data LEC continues to use a BellSouth splitter. It is the responsibility of Freedom Communications USA or its authorized agent to determine if the Loop is compatible for Line Splitting Service. Freedom Communications USA or its authorized agent may use the existing Loop unless it is not compatible with the Data LEC's data service and Freedom Communications USA or its authorized agent submits an LSR to BellSouth to change the Loop.

3.8 **Provisioning Line Splitting and Splitter Space**

3.8.1 The Data LEC, Voice CLEC or BellSouth may provide the splitter. When Freedom Communications USA or its authorized agent owns the splitter, Line Splitting requires the following: a non-designed analog Loop from the serving wire center to the NID at the End User's location; a collocation cross connection connecting the Loop to the collocation space; a second collocation cross connection from the collocation space connected to a voice port; the high frequency spectrum line activation, and a splitter. The Loop and port cannot be a Loop and port combination (i.e. UNE-P), but must be individual stand-alone Network Elements. When BellSouth owns the splitter, Line Splitting requires the following: a non designed analog Loop from the serving wire center to the NID at the End User's location with CFA and splitter port assignments, and a collocation cross connection from the collocation space connected to a voice port.

3.8.2 An unloaded 2-wire copper Loop must serve the End User. The meet point for the Voice CLEC and the Data LEC is the point of termination on the MDF for the Data LEC's cable and pairs.

3.8.3 The foregoing procedures are applicable to migration to Line Splitting Service from a UNE-P arrangement, BellSouth Retail Voice Service, BellSouth High Frequency Spectrum (CO Based) Line Sharing.

3.8.4 For other migration scenarios to line splitting, BellSouth will work cooperatively with CLECs to develop methods and procedures to develop a process whereby a Voice CLEC and a Data LEC may provide services over the same Loop.

3.9 Ordering – Line Splitting

3.9.1 Freedom Communications USA shall use BellSouth's LSOD to order splitters from BellSouth and to activate and deactivate DS0 Collocation CFA for use with Line Splitting.

3.9.2 BellSouth shall provide Freedom Communications USA the LSR format to be used when ordering Line Splitting service.

3.9.3 BellSouth will provision Line Splitting service in compliance with BellSouth's Products and Services Interval Guide available at the website at http://www.interconnection.bellsouth.com.

3.9.4 BellSouth will provide Freedom Communications USA access to Preordering LMU in accordance with the terms of this Agreement. BellSouth shall bill and Freedom Communications USA shall pay the rates for such services as described in Exhibit A.

3.9.5 BellSouth will provide Loop modification to Freedom Communications USA on an existing Loop in accordance with procedures developed in the Line Sharing Collaborative. High Frequency Spectrum (CO Based) Unbundled Loop Modification is a separate distinct service from Unbundled Loop Modification set forth in Section 2.5 of this Attachment. Procedures for High Frequency Spectrum (CO Based) Unbundled Loop Modification may be found on the web at: http://www.interconnection.bellsouth.com/html/unes.html. Nonrecurring rates for this offering are as set forth in Attachment A, Table 1 of this Agreement.

3.10 Maintenance – Line Splitting

3.10.1 BellSouth will be responsible for repairing voice services and the physical loop between the NID at the customer's premises and the termination point. Freedom Communications USA will be responsible for maintaining the voice and data services. Each Party will be responsible for maintaining its own equipment.

3.10.2 Freedom Communications USA shall inform its End Users to direct all problems to Freedom Communications USA or its authorized agent.

3.10.3 If Freedom Communications USA is not the data provider, Freedom Communications USA shall indemnify, defend and hold harmless BellSouth from and against any claims, losses, actions, causes of action, suits, demands, damages, injury, and costs including reasonable attorney fees, which arise out of actions related to the data provider.

4 Local Switching

4.1 BellSouth shall provide non-discriminatory access to local circuit switching capability and local tandem switching capability on an unbundled basis, except as set forth in the Sections below to Freedom Communications USA for the provision of a telecommunications service.

4.2 Local Circuit Switching Capability, including Tandem Switching Capability

4.2.1 Local circuit switching capability is defined as all line-side and trunk-side facilities, plus the features, functions, and capabilities of the switch. The features, functions, and capabilities of the switch shall include the basic switching function of connecting lines to lines, lines to trunks, trunks to lines, and trunks to trunks. Local circuit switching includes all vertical features that the switch is capable of providing, including custom calling, custom local area signalling service features, and Centrex, as well as any technically feasible customized routing functions.

4.2.2 Notwithstanding BellSouth's general duty to unbundle local circuit switching, BellSouth shall not be required to unbundle local circuit switching for Freedom Communications USA for a particular End User when Freedom Communications USA: (1) serves an End User with four (4) or more voice-grade (DS0) equivalents or lines served by BellSouth in Zone 1 of one of the following MSAs: Atlanta, GA; Miami, FL; Orlando, FL; Ft. Lauderdale, FL; Charlotte-Gastonia-Rock Hill, NC; Greensboro-Winston Salem-High Point, NC; Nashville, TN; and New Orleans, LA; or (2) serves an End User with a DS1 or higher capacity Loop in any service area covered by this Agreement. To the extent that Freedom Communications USA is serving any End User as described in (2) above as of the Effective Date of this Agreement, such End User's arrangement may not remain in place and such Arrangement must be terminated by Freedom Communications USA or transitioned by Freedom Communications USA, pursuant to Section 1.8 of this Attachment or BellSouth shall disconnect such Arrangements pursuant to Section 1.8.

4.2.3 Rates for unbundled switching at the DS1 level and above or for combinations with unbundled switching at the DS1 level and above provisioned prior to the Effective Date of this Agreement shall be those rates set forth in Attachment A, Table 1 of this Agreement until April 1, 2004.

4.2.4 Local Switching that is not required to be provided as a UNE will be provided pursuant to a separate agreement or a tariff, at BellSouth's discretion.

4.2.5 Unbundled Local Switching consists of three separate unbundled elements: Unbundled Ports, End Office Switching Functionality, and End Office Interoffice Trunk Ports.

4.2.6 Unbundled Local Switching combined with Common Transport and, if necessary, Tandem Switching provides to Freedom Communications USA's End User local calling and the ability to presubscribe to a primary carrier for intraLATA and/or to presubscribe to a primary carrier for interLATA toll service.

4.2.7 Provided that Freedom Communications USA purchases unbundled local switching from BellSouth and uses the BellSouth Carrier Identification Code (CIC) for its End Users' Local Preferred Interexchange Carrier (LPIC) or if a BellSouth local End User selects BellSouth as its LPIC, then the Parties will consider as local any calls originated by a Freedom Communications USA local End User, or originated by a BellSouth local End User and terminated to a Freedom Communications USA local End User, where such calls originate and terminate in the same LATA, except for those calls originated and terminated through switched access arrangements (i.e., calls that are transported by a Party other than BellSouth). For such calls, BellSouth will charge Freedom Communications USA the UNE elements for the BellSouth facilities utilized. Neither Party shall bill the other originating or terminating switched access charges for such calls. Intercarrier compensation for local calls between BellSouth and Freedom Communications USA shall be as described in BellSouth's UNE Local Call Flows set forth on BellSouth's website.

4.2.8 Where Freedom Communications USA purchases unbundled local switching from BellSouth but does not use the BellSouth CIC for its End Users' LPIC, BellSouth will consider as local those direct dialed telephone calls that originate from a Freedom Communications USA End User and terminate within the basic local calling area or within the extended local calling areas and that are dialed using seven (7) or ten (10) digits as defined and specified in Section A3 of BellSouth's General Subscriber Services Tariffs (GSST). For such local calls, BellSouth will charge Freedom Communications USA the UNE elements for the BellSouth facilities utilized. Intercarrier compensation for local calls between BellSouth and Freedom Communications USA shall be as described in BellSouth's UNE Local Call Flows set forth on BellSouth's website.

4.2.9 For any calls that originate and terminate through switched access arrangements (i.e., calls that are transported by a party other than BellSouth), BellSouth shall bill Freedom Communications USA the UNE elements for the BellSouth facilities utilized. Each Party may bill the toll provider originating or terminating switched access charges as appropriate.

4.2.10 **Unbundled Port Features**

4.2.10.1 Charges for Unbundled Port are as set forth in Exhibit A, and as specified in such exhibit, may or may not include individual features.

4.2.10.2 Where applicable and available, non-switch-based services may be ordered with the Unbundled Port at BellSouth's retail rates.

4.2.10.3 Any features that are not currently available but are technically feasible through the switch can be requested through the BFR/NBR process.

4.2.10.4 BellSouth will provide to Freedom Communications USA selective routing of calls to a requested Operator System platform pursuant to this Attachment. Any other routing requests by Freedom Communications USA will be made pursuant to the BFR/NBR Process as set forth in Attachment 11**.**

4.2.11 **Remote Call Forwarding**

4.2.11.1 As an option, BellSouth shall make available to Freedom Communications USA an unbundled port with Remote Call Forwarding capability (URCF service). URCF service combines the functionality of unbundled local switching, tandem switching and common transport to forward calls from the URCF service telephone number (the number dialed by the calling party) to another telephone number selected by the URCF service subscriber. When ordering URCF service, Freedom Communications USA will ensure that the following conditions are satisfied:

4.2.11.1.1 That the End User of the forward-to number (service) agrees to receive calls forwarded using the URCF service (if such End User is different from the URCF service End User);

4.2.11.1.2 That the forward-to number (service) is equipped with sufficient capacity to receive the volume of calls that will be generated from the URCF service;

4.2.11.1.3 That the URCF service will not be utilized to forward calls to another URCF or similar service; and

4.2.11.1.4 That the forward-to number (service) is not a public safety number (e.g. 911, fire or police number).

4.2.11.2 In addition to the charge for the URCF service port, BellSouth shall charge Freedom Communications USA the rates set forth in Exhibit A for unbundled local switching, tandem switching, and common transport, including all associated usage incurred for calls from the URCF service telephone number (the number dialed by the calling party) to the forward-to number (service).

4.2.12 **Provision for Local Switching**

4.2.12.1 BellSouth shall perform routine testing (e.g., Mechanized Loop Tests (MLT) and test calls such as 105, 107 and 108 type calls) and fault isolation on a mutually agreed upon schedule.

4.2.12.2 BellSouth shall control congestion points such as those caused by radio station call-ins and network routing abnormalities. All traffic shall be restricted in a non-discriminatory manner.

4.2.12.3 BellSouth shall perform manual call trace and permit customer originated call trace. BellSouth shall provide Switching Service Point (SSP) capabilities and signaling software to interconnect the signaling links destined to the Signaling Transfer Point Switch (STPS). These capabilities shall adhere to the technical specifications set forth in the applicable industry standard technical references.

4.2.12.4 BellSouth shall provide interfaces to adjuncts through Telcordia standard interfaces. These adjuncts can include, but are not limited to, the Service Circuit Node and Automatic Call Distributors. BellSouth shall offer to Freedom Communications USA all Advanced Intelligent Network (AIN) triggers in connection with its SMS/SCE offering.

4.2.12.5 BellSouth shall provide access to SS7 Signaling Network or Multi-Frequency trunking if requested by Freedom Communications USA.

4.2.13 **Local Switching Interfaces**.

4.2.13.1 Freedom Communications USA shall order ports and associated interfaces compatible with the services it wishes to provide as listed in Exhibit A. BellSouth shall provide the following local switching interfaces:

4.2.13.1.1 Standard Tip/Ring interface including loopstart or groundstart, on-hook signaling (e.g., for calling number, calling name and message waiting lamp);

4.2.13.1.2 Coin phone signaling;

4.2.13.1.3 Basic Rate Interface ISDN adhering to appropriate Telcordia Technical Requirements;

4.2.13.1.4 Two-wire analog interface to PBX;

4.2.13.1.5 Four-wire analog interface to PBX;

4.2.13.1.6 Four-wire DS1 interface to PBX or customer provided equipment (e.g. computers and voice response systems);

4.2.13.1.7 Primary Rate ISDN to PBX adhering to ANSI standards Q.931, Q.932 and appropriate Telcordia Technical Requirements;

4.2.13.1.8 Switched Fractional DS1 with capabilities to configure Nx64 channels (where N = 1 to 24); and

4.2.13.1.9 Loops adhering to Telcordia TR-NWT-08 and TR-NWT-303 specifications to interconnect Digital Loop Carriers.

4.2.14 All End Users of Freedom Communications USA who have service provisioned via 4-Wire ISDN DS1 Port with E911 Locator Capability shall physically be located in the E911 Tandem Switch service area.

4.2.15 Freedom Communications USA shall pass its End User's telephone number to BellSouth over the Primary Interface (PRI) trunk group via ANI or via direct Centralized Automated Message Accounting (CAMA) trunks to the appropriate E911 tandem switch.

4.2.16 Freedom Communications USA shall maintain the individual telephone number and the correct corresponding address/location data, including maintaining the End User listed address as the actual physical End User location in the E911 Automatic Location Identification (ALI) Database.

4.2.17 Freedom Communications USA will be responsible and liable for any errors resulting from the submission of invalid telephone number and address/location data for the CLEC's End Users.

4.3 **Tandem Switching**

4.3.1 The Tandem Switching capability Network Element is defined as: (i) trunk-connect facilities, which include, but are not limited to, the connection between trunk termination at a cross connect panel and switch trunk card; (ii) the basic switch trunk function of connecting trunks to trunks; and (iii) the functions that are centralized in the Tandem Switches (as distinguished from separate end office switches), including but not limited to call recording, the routing of calls to operator services and signaling conversion features.

4.3.1.1 Where Freedom Communications USA utilizes portions of the BellSouth network in originating or terminating traffic, the Tandem Switching rates are applied in call scenarios where the Tandem Switching Network Element has been utilized. Because switch recordings cannot accurately indicate on a per call basis when the Tandem Switching Network Element has been utilized for an interoffice call originating from a UNE port and terminating to a BellSouth, Independent Company or Facility-Based CLEC office, BellSouth has developed, based upon call studies, a melded rate that takes into account the average percentage of calls that utilize Tandem Switching in these scenarios. BellSouth shall apply the melded Tandem Switching rate for every call in these scenarios. BellSouth shall utilize the melded Tandem Switching Rate until BellSouth has the capability to measure actual Tandem Switch usage in each call scenario specifically mentioned above, at

which point the rate for the actual Tandem Switch usage shall apply. The UNE Call Flows set forth on BellSouth's website, as amended from time to time and incorporated herein by this reference, illustrate when the full or melded Tandem Switching rates apply for specific scenarios.

4.3.2 Technical Requirements

4.3.2.1 Tandem Switching shall have the same capabilities or equivalent capabilities as those described in Telcordia TR-TSY-000540 Issue 2R2, Tandem Supplement, June 1, 1990. The requirements for Tandem Switching include but are not limited to the following:

4.3.2.1.1 Tandem Switching shall provide signaling to establish a tandem connection;

4.3.2.1.2 Tandem Switching will provide screening as jointly agreed to by Freedom Communications USA and BellSouth;

4.3.2.1.3 Where applicable, Tandem Switching shall provide AIN triggers supporting AIN features where such routing is not available from the originating end office switch, to the extent such Tandem switch has such capability;

4.3.2.1.4 Where applicable, Tandem Switching shall provide access to Toll Free number database;

4.3.2.1.5 Tandem Switching shall provide connectivity to Public Safety Answering Point (PSAP)s where 911 solutions are deployed and the tandem is used for 911; and

4.3.2.1.6 Where appropriate, Tandem Switching shall provide connectivity for the purpose of routing transit traffic to and from other carriers.

4.3.2.2 BellSouth may perform testing and fault isolation on the underlying switch that is providing Tandem Switching. Such testing shall be testing routinely performed by BellSouth. The results and reports of the testing shall be made available to Freedom Communications USA.

4.3.2.3 BellSouth shall control congestion points and network abnormalities. All traffic will be restricted in a non-discriminatory manner.

4.3.2.4 Tandem Switching shall process originating toll free traffic received from Freedom Communications USA’s local switch.

4.3.2.5 In support of AIN triggers and features, Tandem Switching shall provide SSP capabilities when these capabilities are not available from the Local Switching Network Element to the extent such Tandem Switch has such capability.

4.3.3 Upon Freedom Communications USA’s purchase of overflow trunk groups, Tandem Switching shall provide an alternate routing pattern for Freedom

Communications USA's traffic overflowing from direct end office high usage trunk groups.

4.4 **AIN Selective Carrier Routing for Operator Services, Directory Assistance and Repair Centers**

4.4.1 Where BellSouth provides local switching to Freedom Communications USA, BellSouth will provide AIN Selective Carrier Routing (AIN SCR) at the request of Freedom Communications USA. AIN SCR will provide Freedom Communications USA with the capability of routing operator calls, 0+ and 0- and 0+ NPA Local Numbering Plan Area (LNPA), 555-1212 directory assistance, 1+411 directory assistance and 611 repair center calls to pre-selected destinations.

4.4.2 Freedom Communications USA shall order AIN SCR through its Account Team and/or Local Contract Manager. AIN SCR must first be established regionally and then on a per central office per state basis.

4.4.3 AIN SCR is not available in DMS 10 switches.

4.4.4 Where AIN SCR is utilized by Freedom Communications USA, the routing of Freedom Communications USA's End User calls shall be pursuant to information provided by Freedom Communications USA and stored in BellSouth's AIN SCR Service Control Point database. AIN SCR shall utilize a set of Line Class Codes (LCCs) unique to a basic class of service assigned on an "as needed" basis. The same LCCs will be assigned in each central office where AIN SCR is established.

4.4.5 Upon ordering AIN SCR Regional Service, Freedom Communications USA shall remit to BellSouth the Regional Service Order nonrecurring charges set forth in Attachment A, Table 1 of this Agreement. There shall be a nonrecurring End Office Establishment Charge per office due at the addition of each central office where AIN SCR will be utilized. Said nonrecurring charge shall be as set forth in Attachment A, Table 1 of this Agreement. For each Freedom Communications USA End User activated, there shall be a nonrecurring End User Establishment charge as set forth in Attachment A, Table 1 of this Agreement. Freedom Communications USA shall pay the AIN SCR Per Query Charge set forth in Attachment A, Table 1 of this Agreement.

4.4.6 This Regional Service Order nonrecurring charge will be non-refundable and will be paid with one half due up-front with the submission of all fully completed required forms including: Regional Selective Carrier Routing (SCR) Order Request-Form A, Central Office AIN SCRSCR Order Request - Form B, AIN SCR Central Office Identification Form - Form C, AIN SCR Routing Options Selection Form - Form D, and Routing Combinations Table - Form E. BellSouth has thirty (30) calendar days to respond to Freedom Communications USA's fully completed firm order as a Regional Service Order. With the delivery of this firm order response to Freedom Communications USA, BellSouth considers that the

delivery schedule of this service commences. The remaining half of the Regional Service Order payment must be paid when at least ninety (90) percent of the Central Offices listed on the original order have been turned up for the service.

4.4.7 The nonrecurring End Office Establishment Charge will be billed to Freedom Communications USA following BellSouth's normal monthly billing cycle for this type of order.

4.4.8 End-User Establishment Orders will not be turned-up until the second payment is received for the Regional Service Order. The nonrecurring End-User Establishment Charges will be billed to Freedom Communications USA following BellSouth's normal monthly billing cycle for this type of order.

4.4.9 Additionally, the AIN SCR Per Query Charge will be billed to Freedom Communications USA following the normal billing cycle for per query charges.

4.4.10 All other network components needed, for example, unbundled switching, unbundled local transport, etc., will be billed per contracted rates.

4.5 <u>Selective Call Routing Using Line Class Codes (SCR-LCC)</u>

4.5.1 Where Freedom Communications USA purchases unbundled local switching from BellSouth and utilizes an operator services provider other than BellSouth, BellSouth will route Freedom Communications USA's End User calls to that provider through Selective Call Routing.

4.5.2 Selective Call Routing using Line Class Codes (SCR-LCC) provides the capability for Freedom Communications USA to have its Operator Call Processing/Directory Assistance (OCP/DA) calls routed to BellSouth's OCP/DA platform for BellSouth provided Custom Branded or Unbranded OCP/DA or to its own or an alternate OCP/DA platform for Self-Branded OCP/DA. SCR-LCC is only available if line class code capacity is available in the requested BellSouth end office switches.

4.5.3 Custom Branding for Directory Assistance (DA) is not available for certain classes of service, including but not limited to Hotel/Motel services, WATS service, and certain PBX services.

4.5.4 Where available, Freedom Communications USA specific and unique LCCs are programmed in each BellSouth end office switch where Freedom Communications USA intends to serve End Users with customized OCP/DA branding. The LCCs specifically identify Freedom Communications USA's End Users so OCP/DA calls can be routed over the appropriate trunk group to the requested OCP/DA platform. Additional LCCs are required in each end office if the end office serves multiple NPAs (i.e., a unique LCC is required per NPA), and/or if the end office switch serves multiple rate areas and Freedom Communications USA intends to

provide Freedom Communications USA -branded OCP/DA to its End Users in these multiple rate areas.

4.5.5 SCR-LCC supporting Custom Branding and Self Branding require Freedom Communications USA to order dedicated trunking from each BellSouth end office identified by Freedom Communications USA, either to the BellSouth Traffic Operator Position System (TOPS) for Custom Branding or to the Freedom Communications USA Operator Service Provider for Self Branding. Separate trunk groups are required for Operator Services and for DA. Rates for trunks are set forth in applicable BellSouth tariffs.

4.5.6 Unbranding - Unbranded DA and/or OCP calls ride common trunk groups provisioned by BellSouth from those end offices identified by Freedom Communications USA to the BellSouth TOPS.

4.5.7 The Rates for SCR-LCC are as set forth in this Attachment. There is a nonrecurring charge for the establishment of each LCC in each BellSouth central office. Furthermore, for Unbranded and Custom Branded OCP/DA provided by BellSouth Operator Services with unbundled ports and unbundled port/loop switch combinations, monthly recurring usage charges shall apply for the UNEs necessary to provide the service, such as end office and tandem switching and common transport. A flat rated end office switching charge shall apply to Self-Branded OCP/DA when used in conjunction with unbundled ports and unbundled port/loop switch combinations.

5 Unbundled Network Element Combinations

5.1 For purposes of this Section, references to “Currently Combined” Network Elements shall mean that the particular Network Elements requested by Freedom Communications USA are in fact already combined by BellSouth in the BellSouth network. References to “Ordinarily Combined” Network Elements shall mean that the particular Network Elements requested by Freedom Communications USA are not already combined by BellSouth in the location requested by Freedom Communications USA but are elements that are typically combined in BellSouth’s network. References to “Not Typically Combined” Network Elements shall mean that the particular Network Elements requested by Freedom Communications USA are not elements that BellSouth combines for its use in its network.

5.1.1 Upon request, BellSouth shall perform the functions necessary to combine unbundled Network Elements in any manner, even if those elements are not ordinarily combined in BellSouth’s network, provided that such combination is technically feasible and will not undermine the ability of other carriers to obtain access to unbundled Network Elements or to interconnect with BellSouth’s network.

5.2 Enhanced Extended Links (EELs)

5.2.1 EELs are combinations of unbundled Loops and unbundled dedicated transport as defined in this Attachment, together with any facilities, equipment, or functions necessary to combine those Network Elements. BellSouth shall provide Freedom Communications USA with EELs where the underlying UNEs are available and in all instances where the requesting carrier meets the eligibility requirements, if applicable.

5.2.2 High-capacity EELs are combinations of loop and transport UNEs or commingled loop and transport facilities at the DS1 and/or DS3 level as described in 47 CFR 51.318(b). High-capacity EELs must comply with the service eligibility requirements set forth in 5.2.4 below.

5.2.3 By placing an order for a high-capacity EEL, Freedom Communications USA thereby certifies that the service eligibility criteria set forth herein are met for access to a converted high-capacity EEL, a new high-capacity EEL, or part of a high-capacity commingled EEL as a UNE. BellSouth shall have the right to audit Freedom Communications USA's high-capacity EELs as specified below.

5.2.4 If a high-capacity EEL or Ordinarily Combined Network Element is not readily available but can be made available through routine network modifications, as defined by the FCC, Freedom Communications USA may request BellSouth to perform such routine network modifications. The request may not be used to place fiber. Each request will be handled as a project on an individual case basis. BellSouth will provide a price quote for the request, and upon receipt of payment by Freedom Communications USA, BellSouth shall perform the routine network modifications.

5.2.5 <u>Service Eligibility Criteria</u>

5.2.5.1 Freedom Communications USA must certify for each high-capacity EEL that all of the following service eligibility criteria are met:

5.2.5.1.1 Freedom Communications USA has received state certification to provide local voice service in the area being served;

5.2.5.2 For each combined circuit, including each DS1 circuit, each DS1 EEL, and each DS1-equivalent circuit on a DS3 EEL:

5.2.5.2.1 1) Each circuit to be provided to each End User will be assigned a local number prior to the provision of service over that circuit;

5.2.5.2.2 2) Each DS1-equivalent circuit on a DS3 EEL must have its own local number assignment so that each DS3 must have at least twenty-eight (28) local voice numbers assigned to it;

5.2.5.2.3 3) Each circuit to be provided to each End User will have 911 or E911 capability prior to provision of service over that circuit;

5.2.5.2.4 4) Each circuit to be provided to each End User will terminate in a collocation arrangement that meets the requirements of 47 CFR 51.318(c);

5.2.5.2.5 5) Each circuit to be provided to each End User will be served by an interconnection trunk over which Freedom Communications USA will transmit the calling party's number in connection with calls exchanged over the trunk;

5.2.5.2.6 6) For each twenty-four (24) DS1 EELs or other facilities having equivalent capacity, Freedom Communications USA will have at least one (1) active DS1 local service interconnection trunk over which Freedom Communications USA will transmit the calling party's number in connection with calls exchanged over the trunk;

5.2.5.2.7 7) Each circuit to be provided to each End User will be served by a switch capable of switching local voice traffic.

5.2.6 BellSouth may, on an annual basis, audit Freedom Communications USA's records in order to verify compliance with the qualifying service eligibility criteria. The audit shall be conducted by a third party independent auditor, and the audit must be performed in accordance with the standards established by the American Institute for Certified Public Accountants (AICPA). To the extent the independent auditor's report concludes that Freedom Communications USA failed to comply with the service eligibility criteria, Freedom Communications USA must true-up any difference in payments, convert all noncompliant circuits to the appropriate service, and make the correct payments on a going-forward basis. In the event the auditor's report concludes that , Freedom Communications USA did not comply in any material respect with the service eligibility criteria, Freedom Communications USA shall reimburse BellSouth for the cost of the independent auditor. To the extent the auditor's report concludes that Freedom Communications USA did comply in all material respects with the service eligibility criteria, BellSouth will reimburse Freedom Communications USA for its reasonable and demonstrable costs associated with the audit. Freedom Communications USA will maintain appropriate documentation to support its certifications.

5.2.7 In the event Freedom Communications USA converts special access services to UNEs, Freedom Communications USA shall be subject to the termination liability provisions in the applicable special access tariffs, if any.

5.3 <u>UNE Port/Loop Combinations</u>

5.3.1 Combinations of port and loop unbundled Network Elements along with switching and transport unbundled Network Elements provide local exchange service for the origination or termination of calls. Port/loop combinations support the same local

calling and feature requirements as described in the Unbundled Local Switching or Port section of this Attachment and the ability to presubscribe to a primary carrier for intraLATA toll service and/or to presubscribe to a primary carrier for interLATA toll service.

5.3.2 BellSouth is not required to provide combinations of port and loop Network Elements on an unbundled basis in locations where, pursuant to FCC and Commission rules, BellSouth is not required to provide local circuit switching as an unbundled Network Element.

5.3.3 BellSouth shall not be required to provide local circuit switching as a UNE in density Zone 1, as defined in 47 CFR 69.123 as of January 1, 1999 of the Atlanta, GA; Miami, FL; Orlando, FL; Ft. Lauderdale, FL; Charlotte-Gastonia-Rock Hill, NC; Greensboro-Winston Salem-High Point, NC; Nashville, TN; and New Orleans, LA, MSAs to Freedom Communications USA if Freedom Communications USA's customer has four (4) or more DS0 equivalent lines.

5.3.4 BellSouth shall not be required to provide local circuit switching as a UNE or combination of UNEs if the End User is being served by a BellSouth DS1 or higher capacity Loop in any service area covered by this Agreement. To the extent that Freedom Communications USA is serving any End User as described above as of October 2, 2003, such arrangement may not remain in place any longer than April 1, 2004, after which such arrangement must be terminated by Freedom Communications USA or BellSouth shall convert such arrangement to tariff pricing. The filing of this Agreement with the applicable Commission shall constitute the filing of the joint transition plan specified by the FCC.

5.3.5 BellSouth shall make 911 updates in the BellSouth 911 database for Freedom Communications USA's UNE port/Loop combinations. BellSouth will not bill Freedom Communications USA for 911 surcharges. Freedom Communications USA is responsible for paying all 911 surcharges to the applicable governmental agency.

5.4 <u>Rates</u>

5.4.1 The rates for the Currently Combined Network Elements specifically set forth in Attachment A, Table 1 of this Agreement shall be the rates associated with such combinations. Where a Currently Combined combination is not specifically set forth in Exhibit A, the rate for such Currently Combined combination of Network Elements shall be the sum of the recurring rates for those individual Network Elements in addition to the applicable non-recurring switch-as-is charge set forth in Exhibit A.

5.4.2 The rates for the Ordinarily Combined Network Elements specifically set forth in Attachment A, Table 1 of this Agreement shall be the non-recurring and recurring charges for those combinations. Where an Ordinarily Combined combination is

not specifically set forth in Exhibit A, the rate for such Ordinarily Combined combination of Network Elements shall be the sum of the recurring and non-recurring rates for those individual Network Elements as set forth in Exhibit A.

5.4.3 Except as set forth in this Section 5, BellSouth shall provide UNE port/loop combinations specifically set forth in Exhibit A that are Currently Combined or Ordinarily Combined in BellSouth's network at the cost-based rates in Exhibit A.

5.4.4 BellSouth shall provide other Currently Combined and Ordinarily Combined and Not Typically Combined UNE Combinations to Freedom Communications USA in addition to those specifically referenced in this Section 5 above, where available. To the extent Freedom Communications USA requests a combination for which BellSouth does not have rates and methods and procedures in place to provide such combination, rates and/or methods and procedures for such combination will be developed pursuant to the BFR/NBR process.

6 Transport, Channelization and Dark Fiber

6.1 Transport

6.1.1 BellSouth shall provide nondiscriminatory access, in accordance with FCC Rules 51.311, 51.319, and Section 251(c)(3) of the Act to interoffice transmission facilities described in this Section 6 on an unbundled basis to Freedom Communications USA for the provision of a qualifying service, as set forth herein.

6.1.1.1 Dedicated Transport is defined as BellSouth's interoffice transmission facilities, dedicated to a particular customer or carrier that Freedom Communications USA uses for transmission between wire centers or switches owned by BellSouth and within the same LATA.

6.1.1.2 Dark Fiber Transport, defined as BellSouth's optical transmission facilities without attached signal regeneration, multiplexing, aggregation or other electronics, between wire centers or switches owned by BellSouth and within the same LATA;

6.1.1.3 Common (Shared) Transport, defined as transmission facilities shared by more than one carrier, including BellSouth, between end office switches, between end office switches and tandem switches, and between tandem switches, in BellSouth's network. Where BellSouth Network Elements are connected by intraoffice wiring, such wiring is provided as part of the Network Element and is not Common (Shared) Transport.

6.1.1.3.1 Notwithstanding any other provision of this Agreement, BellSouth will only provide unbundled access to Common (Shared) Transport to the extent BellSouth is required to provide and is providing unbundled Local Circuit Switching to Freedom Communications USA.

6.1.2 BellSouth shall:

6.1.2.1 Provide Freedom Communications USA exclusive use of Dedicated Transport to a particular customer or carrier, or shared use of the features, functions, and capabilities of interoffice transmission facilities shared by more than one customer or carrier;

6.1.2.2 Provide all technically feasible features, functions, and capabilities of the transport facility;

6.1.2.3 Permit, to the extent technically feasible, Freedom Communications USA to connect such interoffice facilities to equipment designated by Freedom Communications USA, including but not limited to, Freedom Communications USA's collocated facilities; and

6.1.2.4 Permit, to the extent technically feasible, Freedom Communications USA to obtain the functionality provided by BellSouth's digital cross-connect systems.

6.1.3 Technical Requirements of Common (Shared) Transport

6.1.3.1 Common (Shared) Transport provided on DS1, DS3, and STS-1 circuits shall at a minimum meet the performance, availability, jitter, and delay requirements specified for Central Office to Central Office (CO to CO) connections in the applicable industry standards.

6.1.3.2 BellSouth shall be responsible for the engineering, provisioning, and maintenance of the underlying equipment and facilities that are used to provide Common (Shared) Transport.

6.1.3.3 At a minimum, Common (Shared) Transport shall meet all of the requirements set forth in the applicable industry standards.

6.2 **Dedicated Transport**

6.2.1 BellSouth shall offer Dedicated Transport in each of the following ways:

6.2.1.1 As capacity on a shared UNE facility.

6.2.1.2 As a circuit (e.g., DS0, DS1, DS3) dedicated to Freedom Communications USA.

6.2.2 Dedicated Transport may be provided over facilities such as optical fiber, copper twisted pair, and coaxial cable, and shall include transmission equipment such as line terminating equipment, amplifiers, and regenerators.

6.2.3 Freedom Communications USA may obtain a maximum of twelve (12) unbundled dedicated DS3 circuits, or their equivalent, for any single route at the UNE rates set forth in Exhibit A for which dedicated DS3 transport is available as unbundled

transport. Additional capacity may be purchased pursuant to the rates, terms and conditions as set forth in the applicable tariff. A route is defined as a transmission path between one of BellSouth's wire centers or switches and another of BellSouth's wire centers or switches. A route between two (2) points may pass through one or more intermediate wire centers or switches. Transmission paths between identical end points are the same "route", irrespective of whether they pass through the same intermediate wire centers or switches, if any.

6.2.4 Any request to re-terminate one end of a circuit will require the issuance of new service and disconnection of the existing service and the applicable charges in Exhibit A shall apply, and the re-terminated circuit shall be considered a new circuit as of the installation date.

6.2.5 If Dedicated Transport is not readily available but can be made available through routine network modifications, as defined by the FCC, Freedom Communications USA may request BellSouth to perform such routine network modifications. The request may not be used to place fiber. Each request will be handled as a project on an individual case basis. BellSouth will provide a price quote for the request, and upon receipt of payment by Freedom Communications USA, BellSouth shall perform the routine network modifications.

6.2.6 <u>Technical Requirements</u>

6.2.6.1 The entire designated transmission service (e.g., DS0, DS1, DS3) shall be dedicated to Freedom Communications USA designated traffic.

6.2.6.2 For DS1 or DS3 circuits, Dedicated Transport shall at a minimum meet the performance, availability, jitter, and delay requirements specified for Customer Interface to Central Office (CI to CO) connections in the applicable industry standards.

6.2.6.3 BellSouth shall offer the following interface transmission rates for Dedicated Transport:

6.2.6.3.1 DS0 Equivalent;

6.2.6.3.2 DS1;

6.2.6.3.3 DS3; and

6.2.6.3.4 SDH (Synchronous Digital Hierarchy) Standard interface rates are in accordance with International Telecommunications Union (ITU) Recommendation G.707 and Plesiochronous Digital Hierarchy (PDH) rates per ITU Recommendation G.704.

6.2.6.4 BellSouth shall design Dedicated Transport according to its network infrastructure. Freedom Communications USA shall specify the termination points for Dedicated Transport.

6.2.6.5 At a minimum, Dedicated Transport shall meet each of the requirements set forth in the applicable industry technical references.

6.2.6.6 BellSouth Technical References:

6.2.6.6.1 TR-TSY-000191 Alarm Indication Signals Requirements and Objectives, Issue 1, May 1986.

6.2.6.6.2 TR 73501 LightGate®Service Interface and Performance Specifications, Issue D, June 1995.

6.2.6.6.3 TR 73525 MegaLink®Service, MegaLink Channel Service and MegaLink Plus Service Interface and Performance Specifications, Issue C, May 1996.

6.3 Unbundled Channelization (Multiplexing)

6.3.1 Unbundled Channelization (UC) provides the optional multiplexing capability that will allow a DS1 (1.544 Mbps) or DS3 (44.736 Mbps) or STS-1 (51.84 Mbps) UNE or collocation cross connect to be multiplexed or channelized at a BellSouth central office. Channelization can be accomplished through the use of a multiplexer or a digital cross connect system at the discretion of BellSouth. Once UC has been installed, Freedom Communications USA may request channel activation on an as needed basis and BellSouth shall connect the requested facilities via Central Office Channel Interfaces (COCIs). The COCI must be compatible with the lower capacity facility and ordered with the lower capacity facility. This service is available as defined in NECA 4.

6.3.2 BellSouth shall make available the following channelization systems and interfaces:

6.3.2.1 DS1 Channelization System: channelizes a DS1 signal into a maximum of twenty-four (24) DS0s. The following Central Office Channel Interfaces (COCI) are available: Voice Grade, Digital Data and ISDN.

6.3.2.2 DS3 Channelization System: channelizes a DS3 signal into a maximum of twenty-eight (28) DS1s. A DS1 COCI is available with this system.

6.3.2.3 STS-1 Channelization System: channelizes a STS-1 signal into a maximum of twenty-eight (28) DS1s. A DS1 COCI is available with this system.

6.3.2.4 AMI and B8ZS line coding with either Super Frame (SF) and Extended Super Frame (ESF) framing formats will be supported as an optional feature on DS1 facilities.

6.3.3 Technical Requirements

6.3.3.1 In order to assure proper operation with BellSouth provided central office multiplexing functionality, Freedom Communications USA's channelization

equipment must adhere strictly to form and protocol standards. Freedom Communications USA must also adhere to such applicable industry standards for the multiplex channel bank, for voice frequency encoding, for various signaling schemes, and for sub rate digital access.

6.3.3.2 TR 73501 LightGate® Service Interface and Performance Specifications, Issue D, June 1995

6.4 **Dark Fiber Transport**

6.4.1 Dark Fiber Transport is strands of optical fiber existing in aerial or underground structure. BellSouth will not provide line terminating elements, regeneration or other electronics necessary for Freedom Communications USA to utilize Dark Fiber Transport.

6.4.2 If Dark Fiber Transport is not readily available but can be made available through routine network modifications, as defined by the FCC, Freedom Communications USA may request BellSouth to perform such routine network modifications. The request may not be used to place fiber. Each request will be handled as a project on an individual case basis. BellSouth will provide a price quote for the request, and upon receipt of payment by Freedom Communications USA, BellSouth shall perform the routine network modifications.

6.4.3 Requirements

6.4.3.1 BellSouth shall make available Dark Fiber Transport where it exists in BellSouth's network and where, as a result of future building or deployment, it becomes available. Dark Fiber Transport will not be deemed available if (1) it is used by BellSouth for maintenance and repair purposes, (2) it is designated for use pursuant to a firm order placed by another customer, (3) it is restricted for use by all carriers, including BellSouth, because of transmission problems or because it is scheduled for removal due to documented changes to roads and infrastructure, or (4) BellSouth has plans to use the fiber within a two-year planning period. BellSouth is not required to place fibers for Dark Fiber Transport if there are none available.

6.4.3.2 Freedom Communications USA is solely responsible for testing the quality of the Dark Fiber Transport to determine its usability and performance specifications.

6.4.3.3 BellSouth shall use its best efforts to provide to Freedom Communications USA information regarding the location, availability and performance of Dark Fiber Transport within ten (10) business days after receiving a request from Freedom Communications USA. Within such time period, BellSouth shall send written confirmation of availability of the Dark Fiber Transport.

6.4.3.4 If the requested Dark Fiber Transport is available, BellSouth shall use its commercially reasonable efforts to provision the Dark Fiber Transport to Freedom Communications USA within twenty (20) business days after Freedom Communications USA submits a valid, error free LSR. Provisioning includes identification of appropriate connection points (e.g., LGX) to enable Freedom Communications USA to connect Freedom Communications USA provided transmission media (e.g., optical fiber) or equipment to the Dark Fiber Transport.

7 Databases

7.1 Call Related Databases are the databases set forth in this Attachment, other than OSS, that are used in signaling networks for billing and collection, or the transmission, routing or other provision of a telecommunications service. Notwithstanding anything to the contrary herein, BellSouth shall only provide unbundled access to BellSouth Switched Access (SWA) 8XX Toll Free Dialing Ten Digit Screening Service, Line Information Database (LIDB), Signaling, Signaling Link Transport, Signaling Transfer Points, SS7 AIN Access, Service Control Point\Databases, Local Number Portability Databases, SS7 Network Interconnection, and Calling Name (CNAM) Database Service at the prices set forth herein where BellSouth is required to provide and is providing unbundled access to local circuit switching to Freedom Communications USA.

7.2 To the extent unbundled local circuit switching is converted to market based switching pursuant to Section 4.2.2 of this Attachment, BellSouth may, at its discretion, provide access to BellSouth Switched Access (SWA) 8XX Toll Free Dialing Ten Digit Screening Service, LIDB, Signaling, Signaling Link Transport, Signaling Transfer Points, SS7 AIN Access, Service Control Point\Databases, Local Number Portability Databases, SS7 Network Interconnection, Calling Name (CNAM) at market based rates pursuant to a separate agreement or tariff.

8 BellSouth Switched Access (SWA) 8XX Toll Free Dialing Ten Digit Screening Service

8.1 The BellSouth SWA 8XX Toll Free Dialing Ten Digit Screening Service database (8XX SCP Database) is a SCP that contains customer record information and the functionality to provide call-handling instructions for 8XX calls. The 8XX SCP IN software stores data downloaded from the national SMS/8XX database and provides the routing instructions in response to queries from the SSP or tandem. The BellSouth SWA 8XX Toll Free Dialing Ten Digit Screening Service (8XX TFD Service) utilizes the 8XX SCP Database to provide identification and routing of the 8XX calls, based on the ten digits dialed. At Freedom Communications USA's option, 8XX TFD Service is provided with or without POTS number delivery, dialing number delivery, and other optional complex features as selected by Freedom Communications USA.

8.2 The 8XX SCP Database is designated to receive and respond to queries using the ANSI Specification of Signaling System Seven (SS7) protocol.

9 Line Information Database

9.1 LIDB is a transaction-oriented database accessible through Common Channel Signaling (CCS) networks. For access to LIDB, Freedom Communications USA must purchase appropriate signaling links pursuant to Section 10 of this Attachment. LIDB contains records associated with End User Line Numbers and Special Billing Numbers. LIDB accepts queries from other Network Elements and provides appropriate responses. The query originator need not be the owner of LIDB data. LIDB queries include functions such as screening billed numbers that provides the ability to accept Collect or Third Number Billing calls and validation of Telephone Line Number based non-proprietary calling cards. The interface for the LIDB functionality is the interface between BellSouth's CCS network and other CCS networks. LIDB also interfaces to administrative systems.

9.2 Technical Requirements

9.2.1 BellSouth will offer to Freedom Communications USA any additional capabilities that are developed for LIDB during the life of this Agreement.

9.2.2 BellSouth shall process Freedom Communications USA's customer records in LIDB at least at parity with BellSouth customer records, with respect to other LIDB functions. BellSouth shall indicate to Freedom Communications USA what additional functions (if any) are performed by LIDB in the BellSouth network.

9.2.3 Within two (2) weeks after a request by Freedom Communications USA, BellSouth shall provide Freedom Communications USA with a list of the customer data items, which Freedom Communications USA would have to provide in order to support each required LIDB function. The list shall indicate which data items are essential to LIDB function and which are required only to support certain services. For each data item, the list shall show the data formats, the acceptable values of the data item and the meaning of those values.

9.2.4 BellSouth shall provide LIDB systems for which operating deficiencies that would result in calls being blocked shall not exceed thirty (30) minutes per year.

9.2.5 BellSouth shall provide LIDB systems for which operating deficiencies that would not result in calls being blocked shall not exceed twelve (12) hours per year.

9.2.6 BellSouth shall provide LIDB systems for which the LIDB function shall be in overload no more than twelve (12) hours per year.

9.2.7 All additions, updates and deletions of Freedom Communications USA data to the LIDB shall be solely at the direction of Freedom Communications USA. Such

direction from Freedom Communications USA will not be required where the addition, update or deletion is necessary to perform standard fraud control measures (e.g., calling card auto-deactivation).

9.2.8 BellSouth shall provide priority updates to LIDB for Freedom Communications USA data upon Freedom Communications USA's request (e.g., to support fraud detection)**,** via password-protected telephone card, facsimile, or electronic mail within one hour of notice from the established BellSouth contact.

9.2.9 BellSouth shall provide LIDB systems such that no more than 0.01% of Freedom Communications USA customer records will be missing from LIDB, as measured by Freedom Communications USA audits. BellSouth will audit Freedom Communications USA records in LIDB against Data Base Administration System (DBAS) to identify record mismatches and provide this data to a designated Freedom Communications USA contact person to resolve the status of the records and BellSouth will update system appropriately. BellSouth will refer record of mismatches to Freedom Communications USA within one (1) business day of audit. Once reconciled records are received back from Freedom Communications USA, BellSouth will update LIDB the same business day if less than 500 records are received before 1:00PM Central Time. If more than 500 records are received, BellSouth will contact Freedom Communications USA to negotiate a time frame for the updates, not to exceed three business days.

9.2.10 BellSouth shall perform backup and recovery of all of Freedom Communications USA's data in LIDB including sending to LIDB all changes made since the date of the most recent backup copy, in at least the same time frame BellSouth performs backup and recovery of BellSouth data in LIDB for itself. Currently, BellSouth performs backups of the LIDB for itself on a weekly basis; and when a new software release is scheduled, a backup is performed prior to loading the new release.

9.2.11 BellSouth shall provide Freedom Communications USA with LIDB reports of data which are missing or contain errors, as well as any misrouted errors, within a reasonable time period as negotiated between Freedom Communications USA and BellSouth.

9.2.12 BellSouth shall prevent any access to or use of Freedom Communications USA data in LIDB by BellSouth personnel that are outside of established administrative and fraud control personnel, or by any other Party that is not authorized by Freedom Communications USA in writing.

9.2.13 BellSouth shall provide Freedom Communications USA performance of the LIDB Data Screening function, which allows a LIDB to completely or partially deny specific query originators access to LIDB data owned by specific data owners, for Customer Data that is part of an NPA-NXX or RAO-0/1XX wholly or partially owned by Freedom Communications USA at least at parity with BellSouth

Customer Data. BellSouth shall obtain from Freedom Communications USA the screening information associated with LIDB Data Screening of Freedom Communications USA data in accordance with this requirement. BellSouth currently does not have LIDB Data Screening capabilities. When such capability is available, BellSouth shall offer it to Freedom Communications USA under the BFR/NBR process as set forth in Attachment 11.

9.2.14 BellSouth shall accept queries to LIDB associated with Freedom Communications USA customer records and shall return responses in accordance with industry standards.

9.2.15 BellSouth shall provide mean processing time at the LIDB within 0.50 seconds under normal conditions as defined in industry standards.

9.2.16 BellSouth shall provide processing time at the LIDB within 1 second for 99% of all messages under normal conditions as defined in industry standards.

9.3 Interface Requirements

9.3.1 BellSouth shall offer LIDB in accordance with the requirements of this subsection.

9.3.2 The interface to LIDB shall be in accordance with the technical references contained within.

9.3.3 The CCS interface to LIDB shall be the standard interface described herein.

9.3.4 The LIDB Data Base interpretation of the ANSI-TCAP messages shall comply with the technical reference herein. Global Title Translation (GTT) shall be maintained in the signaling network in order to support signaling network routing to the LIDB.

9.3.5 The application of the LIDB rates contained in Exhibit A to this Attachment will be based on a Percent CLEC LIDB Usage (PCLU) factor. Freedom Communications USA shall provide BellSouth a PCLU. The PCLU will be applied to determine the percentage of total LIDB usage to be billed to the other Party at local rates. Freedom Communications USA shall update its PCLU on the first of January, April, July and October and shall send it to BellSouth to be received no later than thirty (30) calendar days after the first of each such month based on local usage for the past three months ending the last day of December, March, June and September, respectively. Requirements associated with PCLU calculation and reporting shall be as set forth in BellSouth's Jurisdictional Factors Reporting Guide, as it is amended from time to time.

10 Signaling

10.1 BellSouth shall offer access to signaling and access to BellSouth's signaling databases subject to compatibility testing and at the rates set forth in this Attachment. BellSouth may provide mediated access to BellSouth signaling systems and databases. Available signaling elements include signaling links, signal transfer points and service control points. Signaling functionality will be available with both A-link and B-link connectivity.

10.2 **Signaling Link Transport**

10.2.1 Signaling Link Transport is a set of two (2) or four (4) dedicated 56 kbps transmission paths between Freedom Communications USA designated Signaling Points of Interconnection that provide appropriate physical diversity.

10.2.2 Technical Requirements

10.2.3 Signaling Link Transport shall consist of full duplex mode 56 kbps transmission paths and shall perform in the following two ways:

10.2.3.1 As an "A-link" Signaling Link Transport is a connection between a switch or SCP and a home Signaling Transfer Point switch pair; and

10.2.3.2 As a "B-link" Signaling Link Transport is a connection between two Signaling Transfer Point switch pairs in different company networks (e.g., between two Signaling Transfer Point switch pairs for two CLECs).

10.2.4 Signaling Link Transport shall consist of two (2) or more signaling link layers as follows:

10.2.4.1 An A-link layer shall consist of two (2) links.

10.2.4.2 A B-link layer shall consist of four (4) links.

10.2.4.3 A signaling link layer shall satisfy interoffice and intraoffice diversity of facilities and equipment, such that:

10.2.4.4 No single failure of facilities or equipment causes the failure of both links in an A-link layer (i.e., the links should be provided on a minimum of two (2) separate physical paths end-to-end); and

10.2.4.5 No two (2) concurrent failures of facilities or equipment shall cause the failure of all four (4) links in a B-link layer (i.e., the links should be provided on a minimum of three separate physical paths end-to-end).

10.2.5 Interface Requirements

10.2.5.1 There shall be a DS1 (1.544 Mbps) interface at Freedom Communications USA's designated SPOIs. Each 56 kbps transmission path shall appear as a DS0 channel within the DS1 interface.

10.3 **Signaling Transfer Points**

10.3.1 A STP is a signaling network function that includes all of the capabilities provided by the signaling transfer point switches (STPS) and their associated signaling links that enables the exchange of SS7 messages among and between switching elements, database elements and signaling transfer point switches.

10.3.2 Technical Requirements

10.3.2.1 STPs shall provide access to BellSouth Local Switching or Tandem Switching and to BellSouth Service Control Points/Databases connected to BellSouth SS7 network. STPs also provide access to third-party local or tandem switching and third-party-provided STPs.

10.3.2.2 The connectivity provided by STPs shall fully support the functions of all other Network Elements connected to the BellSouth SS7 network. This includes the use of the BellSouth SS7 network to convey messages that neither originate nor terminate at a signaling end point directly connected to the BellSouth SS7 network (i.e., transit messages). When the BellSouth SS7 network is used to convey transit messages, there shall be no alteration of the Integrated Services Digital Network User Part or Transaction Capabilities Application Part (TCAP) user data that constitutes the content of the message.

10.3.2.3 If a BellSouth tandem switch routes traffic, based on dialed or translated digits, on SS7 trunks between a Freedom Communications USA local switch and third party local switch, the BellSouth SS7 network shall convey the TCAP messages that are necessary to provide Call Management features (Automatic Callback, Automatic Recall, and Screening List Editing) between Freedom Communications USA local STPs and the STPs that provide connectivity with the third party local switch, even if the third party local switch is not directly connected to BellSouth STPs.

10.3.2.4 STPs shall provide all functions of the SCCP necessary for Class 0 (basic connectionless) service as defined in Telcordia ANSI Interconnection Requirements. This includes GTT and SCCP Management procedures, as specified in ANSI T1.112.4. Where the destination signaling point is a Freedom Communications USA or third party local or tandem switching system directly connected to BellSouth SS7 network, BellSouth shall perform final GTT of messages to the destination and SCCP Subsystem Management of the destination. In all other cases, BellSouth shall perform intermediate GTT of messages to a gateway pair of STPs in an SS7 network connected with BellSouth SS7 network and shall not perform SCCP Subsystem Management of the destination. If BellSouth performs final GTT to a Freedom Communications USA database, then

Freedom Communications USA agrees to provide BellSouth with the Destination Point Code for Freedom Communications USA database.

10.3.2.5 STPs shall provide all functions of the Operations, Maintenance and Administration Part (OMAP) as specified in applicable industry standard technical references, which may include, where available in BellSouth's network, MTP Routing Verification Test (MRVT) and SCCP Routing Verification Test (SRVT).

10.3.2.6 Where the destination signaling point is a BellSouth local or tandem switching system or database, or is a Freedom Communications USA or third party local or tandem switching system directly connected to the BellSouth SS7 network, STPs shall perform MRVT and SRVT to the destination signaling point. In all other cases, STPs shall perform MRVT and SRVT to a gateway pair of STPs in an SS7 network connected with the BellSouth SS7 network. This requirement may be superseded by the specifications for Internetwork MRVT and SRVT when these become approved ANSI standards and available capabilities of BellSouth STPs.

10.4 **SS7**

10.4.1 When technically feasible and upon request by Freedom Communications USA, SS7 AIN Access shall be made available in association with switching. SS7 AIN Access is the provisioning of AIN 0.1 triggers in an equipped BellSouth local switch and interconnection of the BellSouth SS7 network with Freedom Communications USA's SS7 network to exchange TCAP queries and responses with a Freedom Communications USA SCP.

10.4.2 SS7 AIN Access shall provide Freedom Communications USA SCP access to an equipped BellSouth local switch via interconnection of BellSouth's SS7 and Freedom Communications USA SS7 Networks. BellSouth shall offer SS7 AIN Access through its STPs. If BellSouth requires a mediation device on any part of its network specific to this form of access, BellSouth must route its messages in the same manner. The interconnection arrangement shall result in the BellSouth local switch recognizing the Freedom Communications USA SCP as at least at parity with BellSouth's SCPs in terms of interfaces, performance and capabilities.

10.4.3 Interface Requirements

10.4.3.1 BellSouth shall provide the following STP options to connect Freedom Communications USA or Freedom Communications USA-designated local switching systems to the BellSouth SS7 network:

10.4.3.1.1 An A-link interface from Freedom Communications USA local switching systems; and,

10.4.3.1.2 A B-link interface from Freedom Communications USA local STPs.

10.4.3.2 Each type of interface shall be provided by one or more layers of signaling links.

10.4.3.3 The Signaling Point of Interconnection for each link shall be located at a cross-connect element in the CO where the BellSouth STP is located. There shall be a DS1 or higher rate transport interface at each of the SPOIs. Each signaling link shall appear as a DS0 channel within the DS1 or higher rate interface.

10.4.3.4 BellSouth shall provide intraoffice diversity between the SPOI and BellSouth STPs so that no single failure of intraoffice facilities or equipment shall cause the failure of both B-links in a layer connecting to a BellSouth STP.

10.4.3.5 STPs shall provide all functions of the MTP as defined in the applicable industry standard technical references.

10.4.4 Message Screening

10.4.4.1 BellSouth shall set message screening parameters so as to accept valid messages from Freedom Communications USA local or tandem switching systems destined to any signaling point within BellSouth's SS7 network where the Freedom Communications USA switching system has a valid signaling relationship.

10.4.4.2 BellSouth shall set message screening parameters so as to pass valid messages from Freedom Communications USA local or tandem switching systems destined to any signaling point or network accessed through BellSouth's SS7 network where the Freedom Communications USA switching system has a valid signaling relationship.

10.4.4.3 BellSouth shall set message screening parameters so as to accept and pass/send valid messages destined to and from Freedom Communications USA from any signaling point or network interconnected through BellSouth's SS7 network where the Freedom Communications USA SCP has a valid signaling relationship.

10.5 Service Control Points (SCP)/Databases

10.5.1 Call Related Databases provide the storage of, access to, and manipulation of information required to offer a particular service and/or capability. BellSouth shall provide access to the following Databases: Local Number Portability, LIDB, Toll Free Number Database, Automatic Location Identification/Data Management System, and Calling Name Database. BellSouth also provides access to Service Creation Environment and Service Management System (SCE/SMS) application databases and Directory Assistance.

10.5.2 A SCP is deployed in a SS7 network that executes service application logic in response to SS7 queries sent to it by a switching system also connected to the SS7 network. Service Management Systems provide operational interfaces to allow for

provisioning, administration and maintenance of subscriber data and service application data stored in SCPs.

10.5.3 Technical Requirements for SCPs/Databases

10.5.3.1 BellSouth shall provide physical access to SCPs through the SS7 network and protocols with TCAP as the application layer protocol.

10.5.3.2 BellSouth shall provide physical interconnection to databases via industry standard interfaces and protocols (e.g. SS7, ISDN and X.25).

10.5.3.3 The reliability of interconnection options shall be consistent with requirements for diversity and survivability.

10.6 **Local Number Portability Database**

10.6.1 The Permanent Number Portability (PNP) database supplies routing numbers for calls involving numbers that have been ported from one local service provider to another. BellSouth agrees to provide access to the PNP database at rates, terms and conditions as set forth by BellSouth and in accordance with an effective FCC or Commission directive.

10.7 **SS7 Network Interconnection**

10.7.1 SS7 Network Interconnection is the interconnection of Freedom Communications USA local signaling transfer point switches or Freedom Communications USA local or tandem switching systems with BellSouth signaling transfer point switches. This interconnection provides connectivity that enables the exchange of SS7 messages among BellSouth switching systems and databases, Freedom Communications USA local or tandem switching systems, and other third-party switching systems directly connected to the BellSouth SS7 network.

10.7.2 The connectivity provided by SS7 Network Interconnection shall fully support the functions of BellSouth switching systems and databases and Freedom Communications USA or other third-party switching systems with A-link access to the BellSouth SS7 network.

10.7.3 If traffic is routed based on dialed or translated digits between a Freedom Communications USA local switching system and a BellSouth or other third-party local switching system, either directly or via a BellSouth tandem switching system, then it is a requirement that the BellSouth SS7 network convey via SS7 Network Interconnection the TCAP messages that are necessary to provide Call Management services (Automatic Callback, Automatic Recall, and Screening List Editing) between the Freedom Communications USA local signaling transfer point switches and BellSouth or other third-party local switch.

10.7.4 SS7 Network Interconnection shall provide:

10.7.4.1 Signaling Data Link functions, as specified in ANSI T1.111.2;

10.7.4.2 Signaling Link functions, as specified in ANSI T1.111.3; and

10.7.4.3 Signaling Network Management functions, as specified in ANSI T1.111.4.

10.7.5 SS7 Network Interconnection shall provide all functions of the SCCP necessary for Class 0 (basic connectionless) service as specified in ANSI T1.112. This includes GTT and SCCP Management procedures as specified in ANSI T1.112.4. Where the destination signaling point is a BellSouth switching system or DB, or is another third-party local or tandem switching system directly connected to the BellSouth SS7 network, SS7 Network Interconnection shall include final GTT of messages to the destination and SCCP Subsystem Management of the destination. Where the destination signaling point is a Freedom Communications USA local or tandem switching system, SS7 Network Interconnection shall include intermediate GTT of messages to a gateway pair of Freedom Communications USA local STPs and shall not include SCCP Subsystem Management of the destination.

10.7.6 SS7 Network Interconnection shall provide all functions of the Integrated Services Digital Network User Part as specified in ANSI T1.113.

10.7.7 SS7 Network Interconnection shall provide all functions of the TCAP as specified in ANSI T1.114.

10.7.8 If Internetwork MRVT and SRVT become approved ANSI standards and available capabilities of BellSouth STPs, SS7 Network Interconnection may provide these functions of the OMAP.

10.7.9 <u>Interface Requirements</u>

10.7.9.1 The following SS7 Network Interconnection interface options are available to connect Freedom Communications USA or Freedom Communications USA-designated local or tandem switching systems or signaling transfer point switches to the BellSouth SS7 network:

10.7.9.1.1 A-link interface from Freedom Communications USA local or tandem switching systems; and

10.7.9.1.2 B-link interface from Freedom Communications USA STPs.

10.7.9.2 The Signaling Point of Interconnection for each link shall be located at a cross-connect element in the central office where the BellSouth STP is located. There shall be a DS1 or higher rate transport interface at each of the Signaling Points of interconnection. Each signaling link shall appear as a DS0 channel within the DS1 or higher rate interface.

10.7.9.3 BellSouth shall provide intraoffice diversity between the Signaling Points of Interconnection and the BellSouth STP, so that no single failure of intraoffice facilities or equipment shall cause the failure of both B-links in a layer connecting to a BellSouth STP.

10.7.9.4 The protocol interface requirements for SS7 Network Interconnection include the MTP, ISDNUP, SCCP, and TCAP. These protocol interfaces shall conform to the applicable industry standard technical references.

10.7.9.5 BellSouth shall set message screening parameters to accept messages from Freedom Communications USA local or tandem switching systems destined to any signaling point in the BellSouth SS7 network with which the Freedom Communications USA switching system has a valid signaling relationship.

11 Automatic Location Identification/Data Management System (ALI/DMS)

11.1 The ALI/DMS Database contains End User information (including name, address, telephone information, and sometimes special information from the local service provider or End User) used to determine to which PSAP to route the call. The ALI/DMS database is used to provide enhanced routing flexibility for E911. Freedom Communications USA will be required to provide BellSouth daily updates to E911 database. Freedom Communications USA shall also be responsible for providing BellSouth with complete and accurate data for submission to the 911/E911 database for the purpose of providing 911/E911 service to its End Users.

11.2 Technical Requirements

11.2.1 BellSouth shall provide Freedom Communications USA the capability of providing updates to the ALI/DMS database. BellSouth shall provide error reports from the ALI/DMS database to Freedom Communications USA after Freedom Communications USA provides End User information for input into the ALI/DMS database.

11.2.2 Freedom Communications USA shall conform to the National Emergency Number Association (NENA) recommended standards for LNP and updating the ALI/DMS database.

12 Calling Name Database Service

12.1 CNAM is the ability to associate a name with the calling party number, allowing the End User (to which a call is being terminated) to view the calling party's name before the call is answered. The calling party’s information is accessed by queries launched to the CNAM database. This service also provides Freedom Communications USA the opportunity to load and store its subscriber names in the BellSouth CNAM SCPs.

12.2 Freedom Communications USA shall submit to BellSouth a notice of its intent to access and utilize BellSouth CNAM Database Services. Said notice shall be in writing no less than sixty (60) calendar days prior to Freedom Communications USA's access to BellSouth's CNAM Database Services and shall be addressed to Freedom Communications USA's Local Contract Manager.

12.3 BellSouth's provision of CNAM Database Services to Freedom Communications USA requires interconnection from Freedom Communications USA to BellSouth CNAM SCPs. Such interconnections shall be established pursuant to Attachment 3 of this Agreement.

12.4 In order to formulate a CNAM query to be sent to the BellSouth CNAM SCP, Freedom Communications USA shall provide its own CNAM SSP. Freedom Communications USA's CNAM SSPs must be compliant with TR-NWT-001188, "CLASS Calling Name Delivery Generic Requirements".

12.5 If Freedom Communications USA elects to access the BellSouth CNAM SCP via a third party CCS7 transport provider, the third party CCS7 provider shall interconnect with the BellSouth CCS7 network according to BellSouth's Common Channel Signaling Interconnection Guidelines and Telcordia's CCS Network Interface Specification document, TR-TSV-000905. In addition, the third party provider shall establish CCS7 interconnection at the BellSouth Local Signal Transfer Points (LSTPs) serving the BellSouth CNAM SCPs that Freedom Communications USA desires to query.

12.6 If Freedom Communications USA queries the BellSouth CNAM SCP via a third party national SS7 transport provider, the third party SS7 provider shall interconnect with the BellSouth CCS7 network according to BellSouth's Common Channel Signaling Interconnection Guidelines and Telcordia's CCS Network Interface Specification document, TR-TSV-000905. In addition, the third party provider shall establish SS7 interconnection at one or more of the BellSouth Gateway STPs. The payment of all costs associated with the transport of SS7 signals via a third party will be established by mutual agreement of the Parties and this Agreement shall be amended in accordance with modification of the General Terms and Conditions incorporated herein by this reference.

12.7 The mechanism to be used by Freedom Communications USA for initial CNAM record load and/or updates shall be determined by mutual agreement. The initial load and all updates shall be provided by Freedom Communications USA in the BellSouth specified format and shall contain records for every working telephone number that can originate phone calls. It is the responsibility of Freedom Communications USA to provide accurate information to BellSouth on a current basis.

12.8 Updates to the SMS shall occur no less than once a week, reflect service order activity affecting either name or telephone number, and involve only record additions, deletions or changes.

12.9 Freedom Communications USA CNAM records provided for storage in the BellSouth CNAM SCP shall be available, on a SCP query basis only, to all Parties querying the BellSouth CNAM SCP. Further, CNAM service shall be provided by each Party consistent with state and/or federal regulation.

13 Service Creation Environment and Service Management System (SCE/SMS) Advanced Intelligent Network Access

13.1 BellSouth's SCE/SMS AIN Access shall provide Freedom Communications USA the capability to create service applications in a BellSouth SCE and deploy those applications in a BellSouth SMS to a BellSouth SCP.

13.2 BellSouth's SCE/SMS AIN Access shall provide access to SCE hardware, software, testing and technical support (e.g., help desk, system administrator) resources available to Freedom Communications USA. Training, documentation, and technical support will address use of SCE and SMS access and administrative functions but will not include support for the creation of a specific service application.

13.3 BellSouth SCP shall partition and protect Freedom Communications USA service logic and data from unauthorized access.

13.4 When Freedom Communications USA selects SCE/SMS AIN Access, BellSouth shall provide training, documentation, and technical support to enable Freedom Communications USA to use BellSouth's SCE/SMS AIN Access to create and administer applications.

13.5 Freedom Communications USA access will be provided via remote data connection (e.g., dial-in, ISDN).

13.6 BellSouth shall allow Freedom Communications USA to download data forms and/or tables to BellSouth SCP via BellSouth SMS without intervention from BellSouth.

14 Operational Support Systems

14.1 BellSouth has developed and made available electronic interfaces by which Freedom Communications USA may submit LSRs electronically.

14.2 LSRs submitted by means of one of these electronic interfaces will incur an OSS electronic ordering charge. An individual LSR will be identified for billing purposes by its Purchase Order Number (PON). LSRs submitted by means other

than one of these interactive interfaces (mail, fax, courier, etc.) will incur a manual order charge. All OSS charges are specified in Attachment A, Table 1 of this Agreement.

14.3 Denial/Restoral OSS Charge

14.3.1 In the event Freedom Communications USA provides a list of customers to be denied and restored, rather than an LSR, each location on the list will require a separate PON and therefore will be billed as one LSR per location.

14.4 Cancellation OSS Charge

14.4.1 Freedom Communications USA will incur an OSS charge for an accepted LSR that is later canceled.

14.5 Supplements or clarifications to a previously billed LSR will not incur another OSS charge.

14.6 Network Elements and Other Services Manual Additive

14.6.1 The Commissions in some states have ordered per element manual additive nonrecurring charges (NRC) for Network Elements and Other Services ordered by means other than one of the interactive interfaces. These ordered Network Elements and Other Services manual additive NRCs will apply in these states, rather than the charge per LSR. The per element charges are listed in Exhibit A.

Attachment 4

Network Interconnection

TABLE OF CONTENTS

1. GENERAL 3

2. DEFINITIONS: (FOR THE PURPOSE OF THIS ATTACHMENT) 3

3. NETWORK INTERCONNECTION 5

4. INTERCONNECTION TRUNK GROUP ARCHITECTURES 7

5. NETWORK DESIGN AND MANAGEMENT FOR INTERCONNECTION 15

6. LOCAL DIALING PARITY 18

7. INTERCONNECTION COMPENSATION 19

8. FRAME RELAY SERVICE INTERCONNECTION 25

9. ORDERING CHARGES 28

10 BASIC 911 AND E911 INTERCONNECTION 28

Rates	**Exhibit A**
Basic Architecture	**Exhibit B**
One Way Architecture	**Exhibit C**
Two Way Architecture	**Exhibit D**
Supergroup Architecture	**Exhibit E**

NETWORK INTERCONNECTION

1. GENERAL

1.1 The Parties shall provide interconnection with each other's networks for the transmission and routing of telephone exchange service (Local Traffic), ISP-bound Traffic, and exchange access (Switched Access Traffic) on the following terms:

2. DEFINITIONS: (FOR THE PURPOSE OF THIS ATTACHMENT)

For purposes of this attachment only, the following terms shall have the definitions set forth below:

2.1 **Automatic Location Identification (ALI)** is a feature by which the address associated with the calling party's telephone number (ANI) is forwarded to the PSAP for display. Access to the ALI database is described in Attachment 2 to this Agreement.

2.2 **Automatic Number Identification (ANI)** corresponds to the seven-digit telephone number assigned by the serving local exchange carrier.

2.3 **Basic 911 Service (B911)** routes a call to one centralized answering location. The attendant at the answering location obtains the pertinent information that identifies the call and the caller's needs. The attendant then determines the appropriate agency and dials a 7-digit number to transfer the caller to that agency. The calling party's emergency information is verbally relayed to the responding agency and a unit is dispatched to the caller's location.

2.4 **Call Termination** has the meaning set forth for "termination" in 47CFR § 51.701(d).

2.5 **Call Transport** has the meaning set forth for "transport" in 47 CFR § 51.701(c).

2.6 **Call Transport and Termination** is used collectively to mean the switching and transport functions from the Interconnection Point to the last point of switching.

2.7 **Common (Shared) Transport** is defined as the transport of the originating Party's traffic by the terminating Party over the terminating Party's common (shared) facilities between (1) the terminating Party's tandem switch and end office switch, (2) between the terminating Party's tandem switches, and/or (3) between the terminating Party's host and remote end office switches. All switches referred herein must be entered into the Local Exchange Routing Guide (LERG).

2.8 **Dedicated Interoffice Facility** is defined as a switch transport facility between a Party's Serving Wire Center and the first point of switching within the LATA on the other Party's network.

2.9 **End Office Switching** is defined as the function that establishes a communications path between the trunk side and line side of the End Office switch.

2.10 **Enhanced 911 Service** provides features not present in Basic 911 Service, including ANI and ALI display, Selective Routing (SR) and other standard and optional features.

2.11 **Fiber Meet** is an interconnection arrangement whereby the Parties physically interconnect their networks via an optical fiber interface at which one Party's facilities, provisioning, and maintenance responsibility begins and the other Party's responsibility ends.

2.12 **Final Trunk Group** is defined as the trunk group that does not carry overflow traffic.

2.13 **Interconnection Point (IP)** is the physical telecommunications equipment interface that interconnects the networks of BellSouth and Freedom Communications USA.

2.14 **IntraLATA Toll Traffic** is as defined in Section 7 of this Attachment.

2.15 **ISP-bound Traffic** is as defined in Section 7 of this Attachment.

2.16 **Local Channel** is defined as a switched transport facility between a Party's Interconnection Point and the IP's Serving Wire Center.

2.17 **Local Traffic** is as defined in Section 7 of this Attachment.

2.18 **Public Safety Answering Point (PSAP)** is the answering location for 911 calls.

2.19 **Reciprocal Trunk Group** is defined as a one-way trunk group carrying BellSouth originated traffic to be terminated by Freedom Communications USA.

2.20 **Serving Wire Center** is defined as the wire center owned by one Party from which the other Party would normally obtain dial tone for its IP.

2.21 **Selective Routing (SR)** is a standard feature that routes an E911 call from the tandem to the designated PSAP based upon the address of the ANI of the calling party.

2.22 **Tandem Switching** is defined as the function that establishes a communications path between two switching offices through a third switching office through the provision of trunk side to trunk side switching.

2.23 **Transit Traffic** is traffic originating on Freedom Communications USA's network that is switched and/or transported by BellSouth and delivered to a third party's

network, or traffic originating on a third party's network that is switched and/or transported by BellSouth and delivered to Freedom Communications USA's network.

3. NETWORK INTERCONNECTION

3.1 This Attachment pertains only to the provision of network interconnection where Freedom Communications USA owns, leases from a third party or otherwise provides its own switch(es).

3.2 Network interconnection may be provided by the Parties at any technically feasible point within BellSouth's network. Requests to BellSouth for interconnection at points other than as set forth in this Attachment may be made through the Bona Fide Request/New Business Request (BFR/NBR) process set out in this Agreement.

3.2.1 Each Party is responsible for providing, engineering and maintaining the network on its side of the IP. The IP must be located within BellSouth's serving territory in the LATA in which traffic is originating. The IP determines the point at which the originating Party shall pay the terminating Party for the Call Transport and Termination of Local Traffic, ISP-bound Traffic and IntraLATA Toll Traffic.

3.2.2 Pursuant to the provisions of this Attachment, the location of the initial IP in a given LATA shall be established by mutual agreement of the Parties. Subject to the requirements for installing additional IPs, as set forth below, any IPs existing prior to the Effective Date of the Agreement will be accepted as initial IPs and will not require re-grooming. When the Parties mutually agree to utilize two-way interconnection trunk groups for the exchange of Local Traffic, ISP-bound Traffic and IntraLATA Toll Traffic between each other, the Parties shall mutually agree to the location of IP(s). If the Parties are unable to agree to a mutual initial IP, each Party, as originating Party, shall establish a single IP in the LATA for the delivery of its originated Local Traffic, ISP-bound Traffic and IntraLATA Toll Traffic to the other Party for Call Transport and Termination by the terminating Party.

3.2.3 When first establishing the interconnection arrangement in each LATA, the location of the IP shall be established by mutual agreement of the Parties. In selecting the IP, both Parties will act in good faith and select the point that is most efficient for both Parties. If the Parties are unable to agree on the location of the IP, each Party will designate IPs for its originated traffic. Additional IP(s) in a LATA may be established by mutual agreement of the Parties. Notwithstanding the foregoing, additional IP(s) in a particular LATA shall be established, at the request of either Party, when the Local Traffic and ISP-bound Traffic exceeds 8.9 million minutes per month for three consecutive months at the proposed location of the additional IP. BellSouth will not request the establishment of an IP where physical or virtual collocation space is not available or where BellSouth fiber

connectivity is not available. When the Parties agree to utilize two-way interconnection trunk groups for the exchange of Local Traffic, ISP-bound Traffic and IntraLATA Toll Traffic the Parties must agree to the location of the IP(s).

3.3 **Interconnection via Dedicated Facilities**

3.3.1 **Local Channel Facilities.** As part of Call Transport and Termination, the originating Party may obtain Local Channel facilities from the terminating Party. The percentage of Local Channel facilities utilized for Local Traffic shall be determined based upon the application of the Percent Local Facility (PLF) Factor on a statewide basis. The charges applied to the percentage of Local Channel facilities used for Local Traffic as determined by the PLF are as set forth in Exhibit A to this Attachment. The remaining percentage of Local Channel facilities shall be billed at BellSouth's applicable access tariff rates.

3.3.2 **Dedicated Interoffice Facilities.** As a part of Call Transport and Termination, the originating Party may obtain Dedicated Interoffice Facilities from the terminating Party. The percentage of Dedicated Interoffice Facilities utilized for Local Traffic shall be determined based upon the application of the Percent Local Facility (PLF) Factor on a statewide basis. The charges applied to the percentage of the Dedicated Interoffice Facilities used for Local Traffic as determined by the PLF are as set forth in Exhibit A to this Attachment. The remaining percentage of the Dedicated Interoffice Facilities shall be billed at BellSouth's applicable access tariff rates.

3.3.3 The facilities purchased pursuant to this Section 3 shall be ordered via the Access Service Request (ASR) process.

3.4 **Fiber Meet**

3.4.1 Notwithstanding Section 3.2.1, 3.2.2, and 3.2.3 above, if Freedom Communications USA elects to establish interconnection with BellSouth pursuant to a Fiber Meet Local Channel, Freedom Communications USA and BellSouth shall jointly engineer, operate and maintain a Synchronous Optical Network (SONET) transmission system by which they shall interconnect their transmission and routing of Local Traffic via a Local Channel at either the DS1 or DS3 level. The Parties shall work jointly to determine the specific transmission system. However, Freedom Communications USA's SONET transmission system must be compatible with BellSouth's equipment, and the Data Communications Channel (DCC) must be turned off.

3.4.2 Each Party, at its own expense, shall procure, install and maintain the agreed upon SONET transmission system in its network.

3.4.3 The Parties shall agree to a Fiber Meet point between the BellSouth Serving Wire Center and the Freedom Communications USA Serving Wire Center. The Parties shall deliver their fiber optic facilities to the Fiber Meet point with sufficient spare length to reach the fusion splice point for the Fiber Meet Point. BellSouth shall, at its own expense, provide and maintain the fusion splice point for the Fiber Meet. A building type Common Language Location Identification (CLLI) code will be established for each Fiber Meet point. All orders for interconnection facilities from the Fiber Meet point shall indicate the Fiber Meet point as the originating point for the facility.

3.4.4 Upon verbal request by Freedom Communications USA, BellSouth shall allow Freedom Communications USA access to the fusion splice point for the Fiber Meet point for maintenance purposes on Freedom Communications USA's side of the Fiber Meet point.

3.4.5 Neither Party shall charge the other for its Local Channel portion of the Fiber Meet facility used exclusively for Local Traffic. All other appropriate charges will apply. Freedom Communications USA shall be billed for a mixed use of the Local Channel using the actual traffic Freedom Communications USA elects to transmit over the facility and the rates from this Agreement and the appropriate tariff(s). Charges for switched and special access services shall be billed in accordance with the applicable access service tariff.

4. INTERCONNECTION TRUNK GROUP ARCHITECTURES

4.1 BellSouth and Freedom Communications USA shall establish interconnecting trunk groups and trunk group configurations between networks, including the use of one-way or two-way trunks in accordance with the following provisions set forth in this Agreement**.** For trunking purposes, traffic will be routed based on the digits dialed by the originating End User and in accordance with the LERG.

4.2 Freedom Communications USA shall establish an interconnection trunk group(s) to at least one BellSouth access tandem within the LATA for the delivery of Freedom Communications USA's originated Local Traffic, ISP-bound Traffic and IntraLATA Toll Traffic and for the receipt and delivery of Transit Traffic. To the extent Freedom Communications USA desires to deliver Local Traffic, ISP-bound Traffic, IntraLATA Toll Traffic and/or Transit Traffic to BellSouth access tandems within the LATA, other than the tandems(s) to which Freedom Communications USA has established interconnection trunk groups, Freedom Communications USA shall order Multiple Tandem Access, as described in this Attachment, to such other BellSouth access tandems.

4.2.1 Notwithstanding the forgoing, Freedom Communications USA shall establish an interconnection trunk group(s) to all BellSouth access and local tandems in the LATA where Freedom Communications USA has homed (i.e. assigned) its

NPA/NXXs. Freedom Communications USA shall home its NPA/NXXs on the BellSouth tandems that serve the exchange rate center areas to which the NPA/NXXs are assigned. The specified exchange rate center assigned to each BellSouth tandem is defined in the LERG. Freedom Communications USA shall enter its NPA/NXX access and/or local tandem homing arrangements into the LERG.

4.3 Switched access traffic will be delivered to and from Interexchange Carriers (IXCs) based on Freedom Communications USA's NXX access tandem homing arrangement as specified by Freedom Communications USA in the LERG.

4.4 Any Freedom Communications USA interconnection request that (1) deviates from the interconnection trunk group architectures as described in this Agreement, (2) affects traffic delivered to Freedom Communications USA from a BellSouth switch, and (3) requires special BellSouth switch translations and other network modifications will require Freedom Communications USA to submit a BFR/NBR via the BFR/NBR Process as set forth in this Agreement.

4.5 Recurring and nonrecurring rates associated with interconnecting trunk groups between BellSouth and Freedom Communications USA are set forth in Exhibit A. To the extent a rate associated with the interconnecting trunk group is not set forth in Exhibit A, the rate shall be as set forth in the appropriate BellSouth tariff for switched access services.

4.6 For two-way trunk groups that carry only both Parties' Local Traffic, the Parties shall be compensated at 50% of the nonrecurring and recurring rates for dedicated trunks and DS1 facilities. Freedom Communications USA shall be responsible for ordering and paying for any two-way trunks carrying Transit Traffic.

4.7 All trunk groups will be provisioned as Signaling System 7 (SS7) capable where technically feasible. If SS7 is not technically feasible multi-frequency (MF) protocol signaling shall be used.

4.8 In cases where Freedom Communications USA is also an IXC, the IXC's Feature Group D (FG D) trunk group(s) must remain separate from the local interconnection trunk group(s).

4.9 Each Party shall order interconnection trunks and trunk group including trunk and trunk group augmentations via the ASR process. A Firm Order Confirmation (FOC) shall be returned to the ordering Party, after receipt of a valid, error free ASR, within the timeframes set forth in each state's applicable Performance Measures. Notwithstanding the foregoing, blocking situations and projects shall be managed through BellSouth's Carrier Interconnection Switching Center (CISC) Project Management Group and Freedom Communications USA's equivalent trunking group, and FOCs for such orders shall be returned in the timeframes

applicable to the project. A project is defined as (1) a new trunk group or (2) a request for more than 96 trunks on a single or multiple group(s) in a given BellSouth local calling area.

4.10 **Interconnection Trunk Groups for Exchange of Local Traffic and Transit Traffic**

Upon mutual agreement of the Parties in a joint planning meeting, the Parties' shall exchange Local Traffic on two-way interconnection trunk group(s) with the quantity of trunks being mutually determined and the provisioning being jointly coordinated. Furthermore, the Parties shall agree upon the IP(s) for two-way interconnection trunk groups transporting both Parties' Local Traffic, ISP-bound Traffic and IntraLATA Toll Traffic. Freedom Communications USA shall order such two-way trunks via the Access Service Request (ASR) process. BellSouth will use the Trunk Group Service Request (TGSR) to request changes in trunking. Furthermore, the Parties shall jointly review trunk performance and forecasts on a periodic basis. The Parties' use of two-way interconnection trunk groups for the transport of Local Traffic, ISP-bound Traffic and IntraLATA Toll Traffic between the Parties does not preclude either Party from establishing additional one-way interconnection trunks for the delivery of its originated Local Traffic, ISP-bound Traffic and IntraLATA Toll Traffic to the other Party.

4.10.1 **BellSouth Access Tandem Interconnection**

BellSouth access tandem interconnection at a single access tandem provides access to those end offices subtending that access tandem (Intratandem Access). Access tandem interconnection is available for any of the following access tandem architectures

4.10.1.1 **Basic Architecture**

In the basic architecture, Freedom Communications USA's originating Local Traffic, ISP-bound Traffic and IntraLATA Toll Traffic and originating and terminating Transit Traffic is transported on a single two-way trunk group between Freedom Communications USA and BellSouth access tandem(s) within a LATA to provide Intratandem Access. This trunk group carries Transit Traffic between Freedom Communications USA and Independent Companies, Interexchange Carriers, other CLECs, CMRS providers that have a Meet Point Billing arrangement with BellSouth, and other network providers with which Freedom Communications USA desires to exchange traffic. This trunk group also carries Freedom Communications USA originated Transit Traffic transiting a single BellSouth access tandem destined to third party tandems such as an Independent Company tandem or other CLEC tandem. BellSouth originated Local Traffic, ISP-bound Traffic and IntraLATA Toll Traffic is transported on a separate single one-way trunk group terminating to Freedom Communications USA. Other trunk groups for operator services, directory assistance, emergency services and intercept must be established pursuant to the applicable BellSouth tariff if service is

requested. The LERG contains current routing and tandem serving arrangements. The basic Architecture is illustrated in Exhibit B.

4.10.1.2 **One-Way Trunk Group Architecture**

In one-way trunk group architecture, the Parties interconnect using three separate trunk groups. A one-way trunk group provides Intratandem Access for Freedom Communications USA-originated Local Traffic, ISP-bound Traffic and IntraLATA Toll Traffic destined for BellSouth End Users. A second one-way trunk group carries BellSouth-originated Local Traffic, ISP-bound Traffic and IntraLATA Toll Traffic destined for Freedom Communications USA End-Users. A two-way trunk group provides Intratandem Access for Freedom Communications USA's originating and terminating Transit Traffic. This trunk group carries Transit Traffic between Freedom Communications USA and Independent Companies, Interexchange Carriers, other CLECs, CMRS providers that have a Meet Point Billing arrangement with BellSouth, and other network providers with which Freedom Communications USA desires to exchange traffic. This trunk group also carries Freedom Communications USA originated Transit Traffic transiting a single BellSouth access tandem destined to third party tandems such as an Independent Company tandem or other CLEC tandem. BellSouth originated Local Traffic, ISP-bound Traffic and IntraLATA Toll Traffic is transported on a separate single one-way trunk group terminating to Freedom Communications USA. Other trunk groups for operator services, directory assistance, emergency services and intercept must be established pursuant to the applicable BellSouth tariff if service is requested. The LERG contains current routing and tandem serving arrangements. The one-way trunk group architecture is illustrated in Exhibit C.

4.10.1.3 **Two-Way Trunk Group Architecture**

The two-way trunk group Architecture establishes one two-way trunk group to provide Intratandem Access for the exchange of Local Traffic, ISP-bound Traffic and IntraLATA Toll Traffic between Freedom Communications USA and BellSouth. In addition, a separate two-way transit trunk group must be established for Freedom Communications USA's originating and terminating Transit Traffic. This trunk group carries Transit Traffic between Freedom Communications USA and Independent Companies, Interexchange Carriers, other CLECs, CMRS providers that have a Meet Point Billing arrangement with BellSouth, and other network providers with which Freedom Communications USA desires to exchange traffic. This trunk group also carries Freedom Communications USA originated Transit Traffic transiting a single BellSouth access tandem destined to third party tandems such as an Independent Company tandem or other CLEC tandem. BellSouth originated traffic may, in order to prevent or remedy traffic blocking situations, be transported on a separate single one-way trunk group terminating to Freedom Communications USA. However, where Freedom Communications USA is responsive in a timely manner to BellSouth's transport needs for its

originated traffic, BellSouth originating traffic will be placed on the two-way Local Traffic trunk group carrying ISP-bound Traffic and IntraLATA Toll Traffic. Other trunk groups for operator services, directory assistance, emergency services and intercept must be established pursuant to the applicable BellSouth tariff if service is requested. The LERG contains current routing and tandem serving arrangements. The two-way trunk group architecture is illustrated in Exhibit D.

4.10.1.4 **Supergroup Architecture**

In the supergroup architecture, the Parties' Local Traffic, ISP-bound Traffic and IntraLATA Toll Traffic and Freedom Communications USA's Transit Traffic are exchanged on a single two-way trunk group between Freedom Communications USA and BellSouth to provide Intratandem Access to Freedom Communications USA. This trunk group carries Transit Traffic between Freedom Communications USA and Independent Companies, Interexchange Carriers, other CLECs, CMRS providers that have a Meet Point Billing arrangement with BellSouth, and other network providers with which Freedom Communications USA desires to exchange traffic. This trunk group also carries Freedom Communications USA originated Transit Traffic transiting a single BellSouth access tandem destined to third party tandems such as an Independent Company tandem or other CLEC tandem. BellSouth originated traffic may, in order to prevent or remedy traffic blocking situations, be transported on a separate single one-way trunk group terminating to Freedom Communications USA. However, where Freedom Communications USA is responsive in a timely manner to BellSouth's transport needs for its originated traffic, BellSouth originating traffic will be placed on the Supergroup. Other trunk groups for operator services, directory assistance, emergency services and intercept must be established pursuant to the applicable BellSouth tariff if service is requested. The LERG contains current routing and tandem serving arrangements. The supergroup architecture is illustrated in Exhibit E.

4.10.1.5 **Multiple Tandem Access Interconnection**

4.10.1.5.1 Where Freedom Communications USA does not choose access tandem interconnection at every BellSouth access tandem within a LATA, Freedom Communications USA may utilize BellSouth's multiple tandem access interconnection (MTA). To utilize MTA Freedom Communications USA must establish an interconnection trunk group(s) at a BellSouth access tandem through multiple BellSouth access tandems within the LATA as required. BellSouth will route Freedom Communications USA's originated Local Traffic, ISP-bound Traffic and IntraLATA Toll Traffic for LATA wide transport and termination. Freedom Communications USA must also establish an interconnection trunk group(s) at all BellSouth access tandems where Freedom Communications USA NXXs are homed as described in Section 4.2.1 above. If Freedom Communications USA does not have NXXs homed at any particular BellSouth access tandem within a LATA and elects not to establish an interconnection trunk group(s) at such BellSouth access tandem, Freedom Communications USA can

order MTA in each BellSouth access tandem within the LATA where it does have an interconnection trunk group(s) and BellSouth will terminate Freedom Communications USA's Local Traffic, ISP-bound Traffic and IntraLATA Toll Traffic to End-Users served through those BellSouth access tandems where Freedom Communications USA does not have an interconnection trunk group(s). MTA shall be provisioned in accordance with BellSouth's Ordering Guidelines.

4.10.1.5.2 Freedom Communications USA may also utilize MTA to route its originated Transit Traffic; provided, however, that MTA may not be utilized to route switched access traffic that transits the BellSouth network to an Interexchange Carrier (IXC). Switched access traffic originated by or terminated to Freedom Communications USA will be delivered to and from IXCs based on Freedom Communications USA's NXX access tandem homing arrangement as specified by Freedom Communications USA in the LERG.

4.10.1.5.3 Compensation for MTA shall be at the applicable tandem switching and transport charges specified in Exhibit A to this Attachment and shall be billed in addition to any Call Transport and Termination charges.

4.10.1.5.4 To the extent Freedom Communications USA does not purchase MTA in a LATA served by multiple access tandems, Freedom Communications USA must establish an interconnection trunk group(s) to every access tandem in the LATA to serve the entire LATA. To the extent Freedom Communications USA routes its traffic in such a way that utilizes BellSouth's MTA service without properly ordering MTA, Freedom Communications USA shall pay BellSouth the associated MTA charges.

4.10.2 **Local Tandem Interconnection**

4.10.2.1 Local Tandem Interconnection arrangement allows Freedom Communications USA to establish an interconnection trunk group(s) at BellSouth local tandems for: (1) the delivery of Freedom Communications USA-originated Local Traffic, ISP-bound Traffic and IntraLATA Toll Traffic transported and terminated by BellSouth to BellSouth end offices served by those BellSouth local tandems, and (2) for local Transit Traffic transported by BellSouth for third party network providers who have also established an interconnection trunk group(s) at those BellSouth local tandems.

4.10.2.2 When a specified local calling area is served by more than one BellSouth local tandem, Freedom Communications USA must designate a "home" local tandem for each of its assigned NPA/NXXs and establish trunk connections to such local tandems. Additionally, Freedom Communications USA may choose to establish an interconnection trunk group(s) at the BellSouth local tandems where it has no codes homing but is not required to do so. Freedom Communications USA may deliver Local Traffic, ISP-bound Traffic and IntraLATA Toll Traffic to a "home" BellSouth local tandem that is destined for other BellSouth or third party network

provider end offices subtending other BellSouth local tandems in the same local calling area where Freedom Communications USA does not choose to establish an interconnection trunk group(s). It is Freedom Communications USA's responsibility to enter its own NPA/NXX local tandem homing arrangements into the LERG either directly or via a vendor in order for other third party network providers to determine appropriate traffic routing to Freedom Communications USA's codes. Likewise, Freedom Communications USA shall obtain its routing information from the LERG.

4.10.2.3 Notwithstanding establishing an interconnection trunk group(s) to BellSouth's local tandems, Freedom Communications USA must also establish an interconnection trunk group(s) to BellSouth access tandems within the LATA on which Freedom Communications USA has NPA/NXXs homed for the delivery of Interexchange Carrier Switched Access (SWA) and toll traffic, and traffic to Type 2A CMRS connections located at the access tandems. BellSouth shall not switch SWA traffic through more than one BellSouth access tandem. SWA, Type 2A CMRS or toll traffic routed to the local tandem in error will not be backhauled to the BellSouth access tandem for completion. (Type 2A CMRS interconnection is defined in BellSouth's A35 General Subscriber Services Tariff).

4.10.2.4 BellSouth's provisioning of Local Tandem Interconnection assumes that Freedom Communications USA has executed the necessary local interconnection agreements with the other third party network providers subtending those local tandems as required by the Act.

4.10.3 **Direct End Office-to-End Office Interconnection**

4.10.3.1 Direct End Office-to-End Office one-way or two-way interconnection trunk groups allow for the delivery of a Party's originating Local Traffic, ISP-bound Traffic and IntraLATA Toll Traffic to the terminating Party on a direct end office-to-end office basis.

4.10.3.2 The Parties shall utilize direct end office-to-end office trunk groups under any one of the following conditions:

4.10.3.2.1 Tandem Exhaust - If a tandem through which the Parties are interconnected is unable to, or is forecasted to be unable to support additional traffic loads for any period of time, the Parties will mutually agree on an end office trunking plan that will alleviate the tandem capacity shortage and ensure completion of traffic between Freedom Communications USA and BellSouth.

4.10.3.2.2 Traffic Volume –To the extent either Party has the capability to measure the amount of traffic between Freedom Communications USA's switch and a BellSouth end office and where such traffic exceeds or is forecasted to exceed a single DS1 of traffic per month, then the Parties shall install and retain direct end

office trunking sufficient to handle such traffic volumes. Either Party will install additional capacity between such points when overflow traffic exceeds or is forecasted to exceed a single DS1 of traffic per month. In the case of one-way trunking, additional trunking shall only be required by the Party whose trunking has achieved the preceding usage threshold.

4.10.3.2.3 Mutual Agreement - The Parties may install direct end office trunking upon mutual agreement in the absence of conditions (1) or (2) above.

4.10.4 **Transit Traffic Trunk Group**

Transit Traffic trunks can either be two-way trunks or two one-way trunks ordered by Freedom Communications USA to deliver and receive Transit Traffic. Establishing Transit Traffic trunks at BellSouth access and local tandems provides intratandem access to the third parties also interconnected at those tandems.

4.10.4.1 **Toll Free Traffic**

4.10.4.1.1 If Freedom Communications USA chooses BellSouth to perform the Service Switching Point (SSP) Function (i.e., handle Toll Free database queries) from BellSouth's switches, all Freedom Communications USA originating Toll Free traffic will be routed over the Transit Traffic Trunk Group and shall be delivered using GR-394 format. Carrier Code "0110" and Circuit Code (to be determined for each LATA) shall be used for all such calls.

4.10.4.1.2 Freedom Communications USA may choose to perform its own Toll Free database queries from its switch. In such cases, Freedom Communications USA will determine the nature (local/intraLATA/interLATA) of the Toll Free call (local/IntraLATA/InterLATA) based on the response from the database. If the call is a BellSouth local or intraLATA Toll Free call, Freedom Communications USA will route the post-query local or IntraLATA converted ten-digit local number to BellSouth over the local or intraLATA trunk group. If the call is a third party (ICO, IXC, CMRS or other CLEC) local or intraLATA Toll Free call, Freedom Communications USA will route the post-query local or intraLATA converted ten-digit local number to BellSouth over the Transit Traffic Trunk Group and Freedom Communications USA shall provide to BellSouth a Toll Free billing record when appropriate. If the query reveals the call is an interLATA Toll Free call, Freedom Communications USA will route the post-query interLATA Toll Free call (1) directly from its switch for carriers interconnected with its network or (2) over the Transit Traffic Trunk Group to carriers that are not directly connected to Freedom Communications USA's network but that are connected to BellSouth's access tandem.

4.10.5 All post-query Toll Free calls for which Freedom Communications USA performs the SSP function, if delivered to BellSouth, shall be delivered using GR-394 format

for calls destined to IXCs, and GR-317 format for calls destined to end offices that directly subtend a BellSouth access tandem within the LATA.

5. NETWORK DESIGN AND MANAGEMENT FOR INTERCONNECTION

5.1 Network Management and Changes. The Parties will exchange toll-free maintenance contact numbers and escalation procedures. The Parties will provide public notice of network changes in accordance with applicable federal and state rules and regulations.

5.2 Interconnection Technical Standards. The interconnection of all networks will be based upon accepted industry/national guidelines for transmission standards and traffic blocking criteria. Interconnecting facilities shall conform, at a minimum, to the telecommunications industry standard of DS-1 pursuant to Telcordia Standard No. TR-NWT-00499. Where Freedom Communications USA chooses to utilize Signaling System 7 signaling, also known as Common Channel Signaling (SS7), SS7 connectivity is required between the Freedom Communications USA switch and the BellSouth Signaling Transfer Point (STP). BellSouth will provide SS7 signaling using Common Channel Signaling Access Capability in accordance with the technical specifications set forth in the BellSouth Guidelines to Technical Publication, TR-TSV-000905. Facilities of each Party shall provide the necessary on-hook, off-hook answer and disconnect supervision and shall provide calling number ID (Calling Party Number) when technically feasible.

5.3 Quality of Interconnection. The local interconnection for the transmission and routing of telephone exchange service and exchange access that each Party provides to each other will be at least equal in quality to what it provides to itself and any subsidiary or affiliate, where technically feasible, or to any other Party to which each Party provides local interconnection.

5.4 Network Management Controls. Both Parties will work cooperatively to apply sound network management principles by invoking appropriate network management controls (e.g., call gapping) to alleviate or prevent network congestion.

5.5 SS7 Signaling. Both Parties will utilize LEC-to-LEC SS7 Signaling, where available, in conjunction with all traffic in order to enable full interoperability of CLASS features and functions except for call return. All SS7 signaling parameters will be provided, including but not limited to automatic number identification (ANI), originating line information (OLI) calling company category and charge number. All privacy indicators will be honored, and the Parties will exchange Transactional Capabilities Application Part (TCAP) messages to facilitate full interoperability of SS7-based features between the respective networks. Neither Party shall alter the SS7 parameters, or be a party to altering such parameters, or

knowingly pass SS7 parameters that have been altered in order to circumvent appropriate interconnection charges.

5.6 Signaling Call Information. BellSouth and Freedom Communications USA will send and receive 10 digits for Local Traffic. Additionally, BellSouth and Freedom Communications USA will exchange the proper call information, i.e. originated call company number and destination call company number, CIC, and OZZ, including all proper translations for routing between networks and any information necessary for billing.

5.7 **Forecasting for Trunk Provisioning**

5.7.1 Within six (6) months after execution of this Agreement, Freedom Communications USA shall provide an initial interconnection trunk group forecast for each LATA in which it plans to provide service within BellSouth's region. Upon receipt of Freedom Communications USA's forecast, the Parties shall conduct a joint planning meeting to develop a joint interconnection trunk group forecast. Each forecast provided under this Section shall be deemed "Confidential Information" under the General Terms and Conditions of this Agreement.

5.7.1.1 At a minimum, the forecast shall include the projected quantity of Transit Trunks, Freedom Communications USA-to-BellSouth one-way trunks (Freedom Communications USA Trunks), BellSouth-to-Freedom Communications USA one-way trunks (Reciprocal Trunk Groups) and/or two-way interconnection trunks, if the Parties have agreed to interconnect using two-way trunking to transport the Parties' Local Traffic and IntraLATA Toll Traffic. The quantities shall be projected for a minimum of six months and shall include an estimate of the current year plus the next two years total forecasted quantities. The Parties shall mutually develop Reciprocal Trunk Groups and/or two-way interconnection trunk forecast quantities.

5.7.1.2 All forecasts shall include, at a minimum, Access Carrier Terminal Location (ACTL), trunk group type (local/intraLATA toll, Transit, Operator Services, 911, etc.), A location/Z location (CLLI codes for Freedom Communications USA location and BellSouth location where the trunks shall terminate), interface type (e.g., DS1), Direction of Signaling, Trunk Group Number, if known, (commonly referred to as the 2-6 code) and forecasted trunks in service each year (cumulative).

5.7.2 Once initial interconnection trunk forecasts have been developed, Freedom Communications USA shall continue to provide interconnection trunk forecasts on a semiannual basis or at otherwise mutually agreeable intervals. Freedom Communications USA shall use its best efforts to make the forecasts as accurate as possible based on reasonable engineering criteria. The Parties shall continue to

develop Reciprocal Trunk Group and/or two-way interconnection trunk forecasts as described in Section 5.7.1.1.

5.7.3 The submitting and development of interconnection trunk forecasts shall not replace the ordering process for local interconnection trunks. Each Party shall exercise its best efforts to provide the quantity of interconnection trunks mutually forecasted. However, the provision of the forecasted quantity of interconnection trunks is subject to trunk terminations and facility capacity existing at the time the trunk order is submitted. Furthermore, the receipt and development of trunk forecasts does not imply any liability for failure to perform if capacity (trunk terminations or facilities) is not available for use at the forecasted time.

5.8 **Trunk Utilization**

5.8.1 For the Reciprocal Trunk Groups that are Final Trunk Groups (Reciprocal Final Trunk Groups), BellSouth and Freedom Communications USA shall monitor traffic on each interconnection Reciprocal Final Trunk Group that is ordered and installed. The Parties agree that the Reciprocal Final Trunk Groups will be utilized at 60 percent (60%) of the time consistent busy hour utilization level within 90 days of installation. The Parties agree that the Reciprocal Final Trunk Groups will be utilized at eighty percent (80%) of the time consistent busy hour utilization level within 180 days of installation. Any Reciprocal Final Trunk Group not meeting the minimum thresholds set forth in this Section are defined as “Under-utilized” trunks. BellSouth may disconnect any Under-utilized Reciprocal Final Trunk Groups and Freedom Communications USA shall refund to BellSouth the associated nonrecurring and recurring trunk and facility charges paid by BellSouth, if any.

5.8.1.1 BellSouth’s CISC will notify Freedom Communications USA of any under-utilized Reciprocal Trunk Groups and the number of such trunk groups that BellSouth wishes to disconnect. BellSouth will provide supporting information either by email or facsimile to the designated Freedom Communications USA interface. Freedom Communications USA will provide concurrence with the disconnection in seven (7) business days or will provide specific information supporting why the trunks should not be disconnected. Such supporting information should include expected traffic volumes (including traffic volumes generated due to Local Number Portability) and the timeframes within which Freedom Communications USA expects to need such trunks. BellSouth’s CISC Project Manager and Circuit Capacity Manager will discuss the information with Freedom Communications USA to determine if agreement can be reached on the number of Reciprocal Final Trunk Groups to be removed. If no agreement can be reached, BellSouth will issue disconnect orders to Freedom Communications USA. The due date of these orders will be four weeks after Freedom Communications USA was first notified in writing of the underutilization of the trunk groups.

5.8.2 To the extent that any interconnection trunk group is utilized at a time-consistent busy hour of eighty percent (80%) or greater, the Parties may review the trunk groups and, if necessary, shall negotiate in good faith for the installation of augmented facilities.

5.8.3 For the two-way trunk groups, BellSouth and Freedom Communications USA shall monitor traffic on each interconnection trunk group that is ordered and installed. The Parties agree that within 90 days of the installation of the BellSouth two-way trunk or trunks, the trunks will be utilized at 60 percent (60%) of the time consistent busy hour utilization level. The Parties agree that within 180 days of the installation of a trunk or trunks, the trunks will be utilized at eighty percent (80%) of the time consistent busy hour utilization level. Any trunk or trunks not meeting the minimum thresholds set forth in this Section are defined as "Under-utilized" trunks. BellSouth will request the disconnection of any Under-utilized two-way trunk(s) and Freedom Communications USA shall refund to BellSouth the associated nonrecurring and recurring trunk and facility charges paid by BellSouth, if any.

5.8.3.1 BellSouth's LISC will notify Freedom Communications USA of any under-utilized two-way trunk groups and the number of trunks that BellSouth wishes to disconnect. BellSouth will provide supporting information either by email or facsimile to the designated Freedom Communications USA interface. Freedom Communications USA will provide concurrence with the disconnection in seven (7) business days or will provide specific information supporting why the two-way trunks should not be disconnected. Such supporting information should include expected traffic volumes (including traffic volumes generated due to Local Number Portability) and the timeframes within which Freedom Communications USA expects to need such trunks. BellSouth's CISC Project Manager and Circuit Capacity Manager will discuss the information with Freedom Communications USA to determine if agreement can be reached on the number of trunks to be removed. If no agreement can be reached, Freedom Communications USA will issue disconnect orders to BellSouth. The due date of these orders will be four weeks after Freedom Communications USA was first notified in writing of the underutilization of the trunk groups.

5.8.3.2 To the extent that any interconnection trunk group is utilized at a time-consistent busy hour of eighty percent (80%) or greater, the Parties may review the trunk groups and, if necessary, shall negotiate in good faith for the installation of augmented facilities.

6. LOCAL DIALING PARITY

6.1 BellSouth and Freedom Communications USA shall provide local and toll dialing parity, as defined in FCC rules and regulations, with no unreasonable dialing

delays. Dialing parity shall be provided for all originating telecommunications services that require dialing to route a call.

7. INTERCONNECTION COMPENSATION

7.1 Compensation for Call Transportation and Termination for Local Traffic, ISP-bound Traffic and IntraLATA Toll Traffic

7.1.1 For the purposes of this Attachment and for reciprocal compensation between the Parties pursuant to this Attachment, Local Traffic is defined as any telephone call that originates in one exchange and terminates in either the same exchange, or other local calling area associated with the originating exchange as defined and specified in Section A3 of BellSouth's General Subscriber Service Tariff.

7.1.1.1 Additionally, Local Traffic includes any cross boundary, voice-to-voice intrastate, interLATA or interstate, interLATA calls established as a local call by the ruling regulatory body.

7.1.2 ISP-bound Traffic is defined as calls to an information service provider or Internet service provider (ISP) that are dialed by using a local dialing pattern (7 or 10 digits) by a calling party in one exchange to an ISP server or modem in either the same exchange or a corresponding Extended Area Service (EAS) exchange as defined and specified in Section A3 of BellSouth's General Subscriber Service tariff. ISP-bound Traffic is not Local Traffic subject to reciprocal compensation, but instead is information access traffic subject to the FCC's jurisdiction.

7.1.3 Notwithstanding the definitions of Local Traffic and ISP-bound traffic above, and pursuant to the FCC's Order on Remand and Report and Order in CC Docket 99-68 released April 27, 2001 (ISP Order on Remand), BellSouth and Freedom Communications USA agree to the rebuttable presumption that all combined circuit switched Local and ISP-bound Traffic delivered to BellSouth or Freedom Communications USA that exceeds a 3:1 ratio of terminating to originating traffic on a statewide basis shall be considered ISP-bound traffic for compensation purposes. BellSouth and Freedom Communications USA further agree to the rebuttable presumption that all combined circuit switched Local and ISP-bound Traffic delivered to BellSouth or Freedom Communications USA that does not exceed a 3:1 ratio of terminating to originating traffic on a statewide basis shall be considered Local Traffic for compensation purposes.

7.1.4 Neither Party shall pay compensation to the other Party for per minute of use rate elements associated with the Call Transport and Termination of Local Traffic or ISP-bound Traffic.

7.1.5 The appropriate elemental rates set forth in Exhibit A of this Attachment shall apply for Transit Traffic as described in Sections 7.6 and 7.6.1 below and to Multiple Tandem Access as described in Section 4.10.1.5 above.

7.1.6 Neither Party shall represent Switched Access Traffic as Local Traffic or ISP-bound Traffic for purposes of determining compensation for the call.

7.1.7 IntraLATA Toll Traffic is defined as all traffic that originates and terminates within a single LATA that is not Local or ISP-bound traffic under this Attachment.

7.1.7.1 For terminating its intraLATA toll traffic on the other company's network, the originating Party will pay the terminating Party BellSouth's current intrastate or interstate, whichever is appropriate, terminating switched access tariff rates as set forth in BellSouth's Access Services Tariffs as filed and in effect with the FCC or Commission. The appropriate charges will be determined by the routing of the call. Additionally, if one Party is the other Party's End User's presubscribed interexchange carrier or if one Party's End User uses the other Party as an interexchange carrier on a 101XXXX basis, the originating party will charge the other Party the appropriate BellSouth originating switched access tariff rates as set forth in BellSouth's Intrastate or Interstate Access Services Tariff as filed and in effect with the FCC or appropriate Commission.

7.1.8 If Freedom Communications USA assigns NPA/NXXs to specific BellSouth rate centers within the LATA and assigns numbers from those NPA/NXXs to Freedom Communications USA End Users physically located outside of that LATA, BellSouth traffic originating from within the LATA where the NPA/NXXs are assigned and delivered to a Freedom Communications USA customer physically located outside of such LATA, shall not be deemed Local Traffic. Further, Freedom Communications USA agrees to identify such interLATA traffic to BellSouth and to compensate BellSouth for originating and transporting such interLATA traffic to Freedom Communications USA at BellSouth's switched access tariff rates.

7.2 If Freedom Communications USA does not identify such interLATA traffic to BellSouth, to the best of BellSouth's ability BellSouth will determine which whole Freedom Communications USA NPA/NXXs on which to charge the applicable rates for originating network access service as reflected in BellSouth's Access Service Tariff. BellSouth shall make appropriate billing adjustments if Freedom Communications USA can provide sufficient information for BellSouth to determine whether or not said traffic is Local or ISP-bound Traffic.

7.3 **Jurisdictional Reporting**

7.3.1 **Percent Local Use**. Each Party shall report to the other a Percent Local Usage (PLU) factor. The application of the PLU will determine the amount of local or

ISP-bound minutes to be billed to the other Party. Each Party shall update its PLU on the first of January, April, July and October of the year and shall send it to the other Party to be received no later than 30 days after the first of each such month based on local and ISP-bound usage for the past three months ending the last day of December, March, June and September, respectively. Requirements associated with PLU calculation and reporting shall be as set forth in BellSouth's Jurisdictional Factors Reporting Guide, as it is amended from time to time.

7.3.2 **Percent Local Facility**. Each Party shall report to the other a Percent Local Facility (PLF) factor. The application of the PLF will determine the portion of switched dedicated transport to be billed per the local jurisdiction rates. The PLF shall be applied to Multiplexing, Local Channel and Interoffice Channel Switched Dedicated Transport utilized in the provision of local interconnection trunks. Each Party shall update its PLF on the first of January, April, July and October of the year and shall send it to the other Party to be received no later than 30 days after the first of each such month to be effective the first bill period the following month, respectively. Requirements associated with PLU and PLF calculation and reporting shall be as set forth in BellSouth's Jurisdictional Factors Reporting Guide, as it is amended from time to time.

7.3.3 **Percent Interstate Usage**. Each Party shall report to the other the projected Percent Interstate Usage (PIU) factor. All jurisdictional report requirements, rules and regulations for Interexchange Carriers specified in BellSouth's Intrastate Access Services Tariff will apply to Freedom Communications USA. After interstate and intrastate traffic percentages have been determined by use of PIU procedures, the PLU and PLF factors will be used for application and billing of local interconnection. Each Party shall update its PIUs on the first of January, April, July and October of the year and shall send it to the other Party to be received no later than 30 days after the first of each such month, for all services showing the percentages of use for the past three months ending the last day of December, March, June and September.

7.3.4 Notwithstanding the provisions in Section 7.3.1, 7.3.2, and 7.3.3 above, where the terminating Party has message recording technology that identifies the jurisdiction of traffic terminated as defined in this Agreement, such information shall, at the terminating Party's option, be utilized to determine the appropriate jurisdictional reporting factors (PLU, PIU, and/or PLF), in lieu of those provided by the originating Party. In the event that the terminating Party opts to utilize its own data to determine jurisdictional reporting factors, such terminating Party shall notify the originating Party at least 15 days prior to the beginning of the calendar quarter in which the terminating Party will begin to utilize its own data. Such factors shall subject to the Dispute Resolution provisions in this Agreement, as well as the Audit provisions set forth in 7.3.5 below.

7.3.5 **Audits.** On thirty (30) days written notice, each Party must provide the other the ability and opportunity to conduct an annual audit to ensure the proper billing of traffic. BellSouth and Freedom Communications USA shall retain records of call detail for a minimum of nine months from which the PLU, PLF and/or PIU can be ascertained. The audit shall be conducted during normal business hours at an office designated by the Party being audited. Audit requests shall not be submitted more frequently than one (1) time per calendar year. Audits shall be performed by a mutually acceptable independent auditor paid for by the Party requesting the audit. The PLF, PLU and/or PIU shall be adjusted based upon the audit results and shall apply for the quarter the audit was completed, for the quarter prior to the completion of the audit, and for the two quarters following the completion of the audit. If, as a result of an audit, either Party is found to have overstated the PLF, PLU and/or PIU by twenty percentage points (20%) or more, that Party shall reimburse the auditing Party for the cost of the audit.

7.4 **Compensation for 8XX Traffic**

7.4.1 Compensation for 8XX Traffic. Each Party shall pay the other the appropriate switched access charges set forth in the BellSouth intrastate or interstate switched access tariffs. Freedom Communications USA will pay BellSouth the database query charge as set forth in the BellSouth intrastate or interstate switched access tariffs as applicable.

7.4.2 Records for 8XX Billing. Each Party will provide to the other the appropriate records necessary for billing intraLATA 8XX customers. The records provided will be in a standard EMI format.

7.4.3 8XX Access Screening. BellSouth's provision of 8XX Toll Free Dialing (TFD) to Freedom Communications USA requires interconnection from Freedom Communications USA to BellSouth's 8XX Signal Channel Point (SCP). Such interconnections shall be established pursuant to BellSouth's Common Channel Signaling Interconnection Guidelines and Telcordia's CCS Network Interface Specification document, TR-TSV-000905. Freedom Communications USA shall establish SS7 interconnection at the BellSouth Local Signal Transfer Points serving the BellSouth 8XX SCPs that Freedom Communications USA desires to query. The terms and conditions for 8XX TFD are set out in BellSouth's Intrastate Access Services Tariff.

7.5 **Mutual Provision of Switched Access Service**

7.5.1 Switched Access Traffic. Switched Access Traffic is described as telephone calls requiring local transmission or switching services for the purpose of the origination or termination of Telephone Toll Service. Switched Access Traffic includes, but is not limited to, the following types of traffic: Feature Group A, Feature Group B, Feature Group C, Feature Group D, toll free access (e.g., 8XX), 900 access and

their successors. Additionally, any Public Switched Telephone Network interexchange telecommunications traffic, regardless of transport protocol method, where the originating and terminating points, end-to-end points, are in different LATAs, or are in the same LATA and the Parties' Switched Access services are used for the origination or termination of the call, shall be considered Switched Access Traffic. Irrespective of transport protocol method used, a call which originates in one LATA and terminates in another LATA (i.e., the end-to-end points of the call) or in which the Parties' Switched Access Services are used for the origination or termination of the call, shall not be considered Local Traffic or ISP-bound Traffic.

7.5.2 If the BellSouth End User chooses Freedom Communications USA as their presubscribed interexchange carrier, or if the BellSouth End User uses Freedom Communications USA as an interexchange carrier on a 101XXXX basis, BellSouth will charge Freedom Communications USA the appropriate BellSouth tariff charges for originating switched access services.

7.5.3 Where the originating Party delivers a call to the terminating Party over switched access facilities, the originating Party will pay the terminating Party terminating, switched access charges as set forth in BellSouth's Intrastate or Interstate Access Services Tariff, as appropriate.

7.5.4 When Freedom Communications USA's end office switch provides an access service connection to or from an interexchange carrier (IXC) by a direct trunk group to the IXC utilizing BellSouth facilities, each Party will provide its own access services to the IXC and bill on a multi-bill, multi-tariff meet-point basis. Each Party will bill its own access services rates to the IXC with the exception of the interconnection charge. The interconnection charge will be billed by Freedom Communications USA as the Party providing the end office function. Each party will use the Multiple Exchange Carrier Access Billing (MECAB) guidelines to establish meet point billing for all applicable traffic. The Parties shall utilize a thirty (30) day billing period.

7.5.4.1 When Freedom Communications USA's end office subtends the BellSouth Access Tandem switch for receipt or delivery of switched access traffic and provides an access service connection to or from an IXC via BellSouth's Access Tandem switch, BellSouth, as the tandem company agrees to provide to Freedom Communications USA, as the End Office Company, as defined in MECAB, at no charge, all the switched access detail usage data, recorded at the access tandem, within no more than sixty (60) days after the recording date. Each Party will notify the other when it is not feasible to meet these requirements. As business requirements change, data reporting requirements may be modified as necessary.

7.5.5 BellSouth, as the tandem provider company, will retain for a minimum period of sixty (60) days, access message detail sufficient to recreate any data that is lost or

damaged by the tandem provider company or any third party involved in processing or transporting data.

7.5.6 BellSouth, as the tandem provider company, agrees to recreate the lost or damaged data within forty-eight (48) hours of notification by the other or by an authorized third party handling the data.

7.5.7 Any claims against BellSouth, as the tandem provider company, for unbillable or uncollectible revenue should be filed with the tandem provider company within 120 days of the usage date.

7.5.8 BellSouth, as the tandem provider company shall keep records of its billing activities relating to jointly-provided Intrastate and Interstate access services in sufficient detail to permit the Subsequent Billing Party to, by formal or informal review or audit, to verify the accuracy and reasonableness of the jointly-provided access billing data provided by the Initial Billing Party. Each Party agrees to cooperate in such formal or informal reviews or audits and further agrees to jointly review the findings of such reviews or audits in order to resolve any differences concerning the findings thereof.

7.5.9 Freedom Communications USA agrees not to deliver switched access traffic to BellSouth for termination except over Freedom Communications USA ordered switched access trunks and facilities.

7.6 **Transit Traffic**

7.6.1 BellSouth shall provide tandem switching and transport services for Freedom Communications USA's Transit Traffic. Rates for local Transit Traffic and ISP-bound Transit Traffic shall be the applicable Call Transport and Termination charges as set forth in Exhibit A to this Attachment. Rates for Switched Access Transit Traffic shall be the applicable charges as set forth in BellSouth Interstate or Intrastate Switched Access tariffs. Billing associated with all Transit Traffic shall be pursuant to MECAB guidelines. Traffic between Freedom Communications USA and Wireless Type 1 third parties shall not be treated as Transit Traffic from a routing or billing perspective. Traffic between Freedom Communications USA and Wireless Type 2A or a third party CLEC utilizing BellSouth switching shall not be treated as Transit Traffic from a routing or billing perspective until BellSouth and the Wireless carrier or a third party CLEC utilizing BellSouth switching have the capability to properly meet-point-bill in accordance with MECAB guidelines.

7.6.2 The delivery of traffic that transits the BellSouth network and is transported to another carrier's network is excluded from any BellSouth billing guarantees. BellSouth agrees to deliver Transit Traffic to the terminating carrier; provided, however, that Freedom Communications USA is solely responsible for negotiating

and executing any appropriate contractual agreements with the terminating carrier for the exchange of Transit Traffic through the BellSouth network. BellSouth will not be liable for any compensation to the terminating carrier or to Freedom Communications USA. In the event that the terminating third party carrier imposes on BellSouth any charges or costs for the delivery of Transit Traffic, Freedom Communications USA shall reimburse BellSouth for such costs. Additionally, the Parties agree that any billing to a third party or other telecommunications carrier under this section shall be pursuant to MECAB procedures.

8. FRAME RELAY SERVICE INTERCONNECTION

8.1 In addition to the Local Interconnection services set forth above, BellSouth will offer a network to network Interconnection arrangement between BellSouth's and Freedom Communications USA's frame relay switches as set forth below. The following provisions will apply only to Frame Relay Service and Exchange Access Frame Relay Service and Managed Shared Frame Relay Service in those states in which Freedom Communications USA is certified and providing Frame Relay Service as a Local Exchange Carrier and where traffic is being exchanged between Freedom Communications USA and BellSouth Frame Relay Switches in the same LATA.

8.2 The Parties agree to establish two-way Frame Relay facilities between their respective Frame Relay Switches to the mutually agreed upon Frame Relay Service point(s) of interconnection (IP(s)) within the LATA. All IPs shall be within the same Frame Relay Network Serving Areas as defined in Section A40 of BellSouth's General Subscriber Service Tariff except as set forth in this Attachment.

8.3 Upon the request of either Party, such interconnection will be established where BellSouth and Freedom Communications USA have Frame Relay Switches in the same LATA. Where there are multiple Frame Relay switches in one central office, an interconnection with any one of the switches will be considered an interconnection with all of the switches at that central office for purposes of routing packet traffic.

8.4 The Parties agree to provision local and intraLATA Frame Relay Service and Exchange Access Frame Relay Service and Managed Shared Frame Relay Service (both intrastate and interstate) over Frame Relay interconnection facilities between the respective Frame Relay switches and the IPs.

8.5 The Parties agree to assess each other reciprocal charges for the facilities that each provides to the other according to the Percent Local Circuit Use Factor (PLCU), determined as follows:

8.5.1 If the data packets originate and terminate in locations in the same LATA, and are consistent with the local definitions of the Agreement, the traffic is considered local. Frame Relay framed packet data is transported within Virtual Circuits (VC). For the purposes of this Agreement, if all the data packets transported within a VC remain within the LATA, then consistent with the local definitions in this Agreement, the traffic on that VC is local (Local VC).

8.5.2 If the originating and terminating locations of the two-way packet data traffic are not in the same LATA, the traffic on that VC is interLATA (InterLATA VC).

8.5.3 The PLCU is determined by dividing the total number of Local VCs, by the total number of VCs on each Frame Relay facility. To facilitate implementation, Freedom Communications USA may determine its PLCU in aggregate, by dividing the total number of Local VCs in a given LATA by the total number VCs in that LATA. The Parties agree to renegotiate the method for determining PLCU, at BellSouth's request, and within 90 days, if BellSouth notifies Freedom Communications USA that it has found that this method does not adequately represent the PLCU.

8.5.4 If there are no VCs on a facility when it is billed, the PLCU will be zero.

8.5.5 BellSouth will provide the circuit between the Parties' respective Frame Relay Switches. The Parties will be compensated as follows: BellSouth will invoice, and Freedom Communications USA will pay, the total nonrecurring and recurring charges for the circuit based upon the rates set forth in BellSouth's Interstate Access Tariff, FCC No. 1. Freedom Communications USA will then invoice, and BellSouth will pay, an amount calculated by multiplying the BellSouth billed charges for the circuit by one-half of Freedom Communications USA's PLCU.

8.6 The Parties agree to compensate each other for Frame Relay network-to-network interface (NNI) ports based upon the NNI rates set forth in BellSouth's Interstate Access Tariff, FCC No. 1. Compensation for each pair of NNI ports will be calculated as follows: BellSouth will invoice, and Freedom Communications USA will pay, the total nonrecurring and recurring charges for the NNI port. Freedom Communications USA will then invoice, and BellSouth will pay, an amount calculated by multiplying the BellSouth billed nonrecurring and recurring charges for the NNI port by Freedom Communications USA's PLCU.

8.7 Each Party agrees that there will be no charges to the other Party for its own subscriber's Permanent Virtual Circuit (PVC) rate elements for the local PVC segment from its Frame Relay switch to its own subscriber's premises. PVC rate elements include the Data Link Connection Identifier (DLCI) and Committed Information Rate (CIR).

8.8 For the PVC segment between the Freedom Communications USA and BellSouth Frame Relay switches, compensation for the PVC charges is based upon the rates in BellSouth's Interstate Access Tariff, FCC No. 1.

8.9 Compensation for PVC rate elements will be calculated as follows:

8.9.1 If Freedom Communications USA orders a VC connection between a BellSouth subscriber's PVC segment and a PVC segment from the BellSouth Frame Relay switch to the Freedom Communications USA Frame Relay switch, BellSouth will invoice, and Freedom Communications USA will pay, the total nonrecurring and recurring PVC charges for the PVC segment between the BellSouth and Freedom Communications USA Frame Relay switches. If the VC is a Local VC, Freedom Communications USA will then invoice and BellSouth will pay, the total nonrecurring and recurring PVC charges billed for that segment. If the VC is not local, no compensation will be paid to Freedom Communications USA for the PVC segment.

8.9.2 If BellSouth orders a Local VC connection between a Freedom Communications USA subscriber's PVC segment and a PVC segment from the Freedom Communications USA Frame Relay switch to the BellSouth Frame Relay switch, BellSouth will invoice, and Freedom Communications USA will pay, the total nonrecurring and recurring PVC and CIR charges for the PVC segment between the BellSouth and Freedom Communications USA Frame Relay switches. If the VC is a Local VC, Freedom Communications USA will then invoice and BellSouth will pay the total nonrecurring and recurring PVC and CIR charges billed for that segment. If the VC is not local, no compensation will be paid to Freedom Communications USA for the PVC segment.

8.9.3 The Parties agree to compensate each other for requests to change a PVC segment or PVC service order record, according to the Feature Change charge as set forth in the BellSouth access tariff BellSouth Tariff FCC No. 1.

8.9.4 If Freedom Communications USA requests a change, BellSouth will invoice and Freedom Communications USA will pay a Feature Change charge for each affected PVC segment.

8.9.4.1 If BellSouth requests a change to a Local VC, Freedom Communications USA will invoice and BellSouth will pay a Feature Change charge for each affected PVC segment.

8.9.5 The Parties agree to limit the sum of the CIR for the VCs on a DS1 NNI port to not more than three times the port speed, or not more than six times the port speed on a DS3 NNI port.

8.9.6 Except as expressly provided herein, this Agreement does not address or alter in any way either Party's provision of Exchange Access Frame Relay Service, Managed Shared Frame Relay Service or interLATA Frame Relay Service. All charges by each Party to the other for carriage of Exchange Access Frame Relay Service or interLATA Frame Relay Service are included in the BellSouth access tariff BellSouth Tariff FCC No. 1.

8.10 Freedom Communications USA will identify and report quarterly to BellSouth the PLCU of the Frame Relay facilities it uses, per Section 8.5.3 above.

8.11 Either Party may request a review or audit of the various service components, consistent with the provisions of section E2 of the BellSouth State Access Services tariffs or Section 2 of the BellSouth FCC No.1 Tariff.

9. ORDERING CHARGES

9.1 The terms, conditions and rates for Ordering Charges are as set forth in FCC Tariff for Access Service Records.

10 BASIC 911 AND E911 INTERCONNECTION

10.1 Basic 911 and E911 provides a caller access to the applicable emergency service bureau by dialing 911.

10.2 Basic 911 Interconnection. BellSouth will provide to Freedom Communications USA a list consisting of each municipality that subscribes to Basic 911 service. The list will also provide, if known, the E911 conversion date for each municipality and, for network routing purposes, a ten-digit directory number representing the appropriate emergency answering position for each municipality subscribing to 911. Freedom Communications USA will be required to arrange to accept 911 calls from its end users in municipalities that subscribe to Basic 911 service and translate the 911 call to the appropriate 10-digit directory number as stated on the list provided by BellSouth. Freedom Communications USA will be required to route that call to BellSouth at the appropriate 911 tandem. When a municipality converts to E911 service, Freedom Communications USA will be required to begin using E911 procedures.

10.3 E911 Interconnection. Freedom Communications USA shall install a minimum of two dedicated trunks originating from its Serving Wire Center and terminating to the appropriate E911 tandem. The Serving Wire Center must be in the same LATA as the E911 tandem. The dedicated trunks shall be, at a minimum, DS0 level trunks configured as part of a digital (1.544 Mb/s) interface (DS1 facility). The configuration shall use CAMA-type signaling with multifrequency (MF) pulsing that will deliver ANI with the voice portion of the call. If the user interface

is digital, MF pulses as well as other AC signals shall be encoded per the u-255 Law convention. Freedom Communications USA will be required to provide BellSouth daily updates to the E911 database. Freedom Communications USA will be required to forward 911 calls to the appropriate E911 tandem along with ANI based upon the current E911 end office to tandem homing arrangement as provided by BellSouth. If the E911 tandem trunks are not available, Freedom Communications USA will be required to route the call to a designated 7-digit or 10-digit local number residing in the appropriate Public Service Answering Point (PSAP). This call will be transported over BellSouth's interoffice network and will not carry the ANI of the calling party. Freedom Communications USA shall be responsible for providing BellSouth with complete and accurate data for submission to the 911/E911 database for the purpose of providing 911/E911 to its end users.

10.4 Rates. BellSouth will impose applicable charges on Freedom Communications USA for BellSouth trunking arrangements. Rates for trunking arrangements are as set forth in Exhibit A of this Attachment. In addition Freedom Communications USA will be responsible for charges for the facilities that the E911 trunks will ride. Facility rates are as set forth in the access tariff.

10.5 The detailed practices and procedures for 911/E911 interconnection are contained in the E911 Local Exchange Carrier Guide For Facility-Based Providers as amended from time to time during the term of this Agreement.

Exhibit B

Basic Architecture

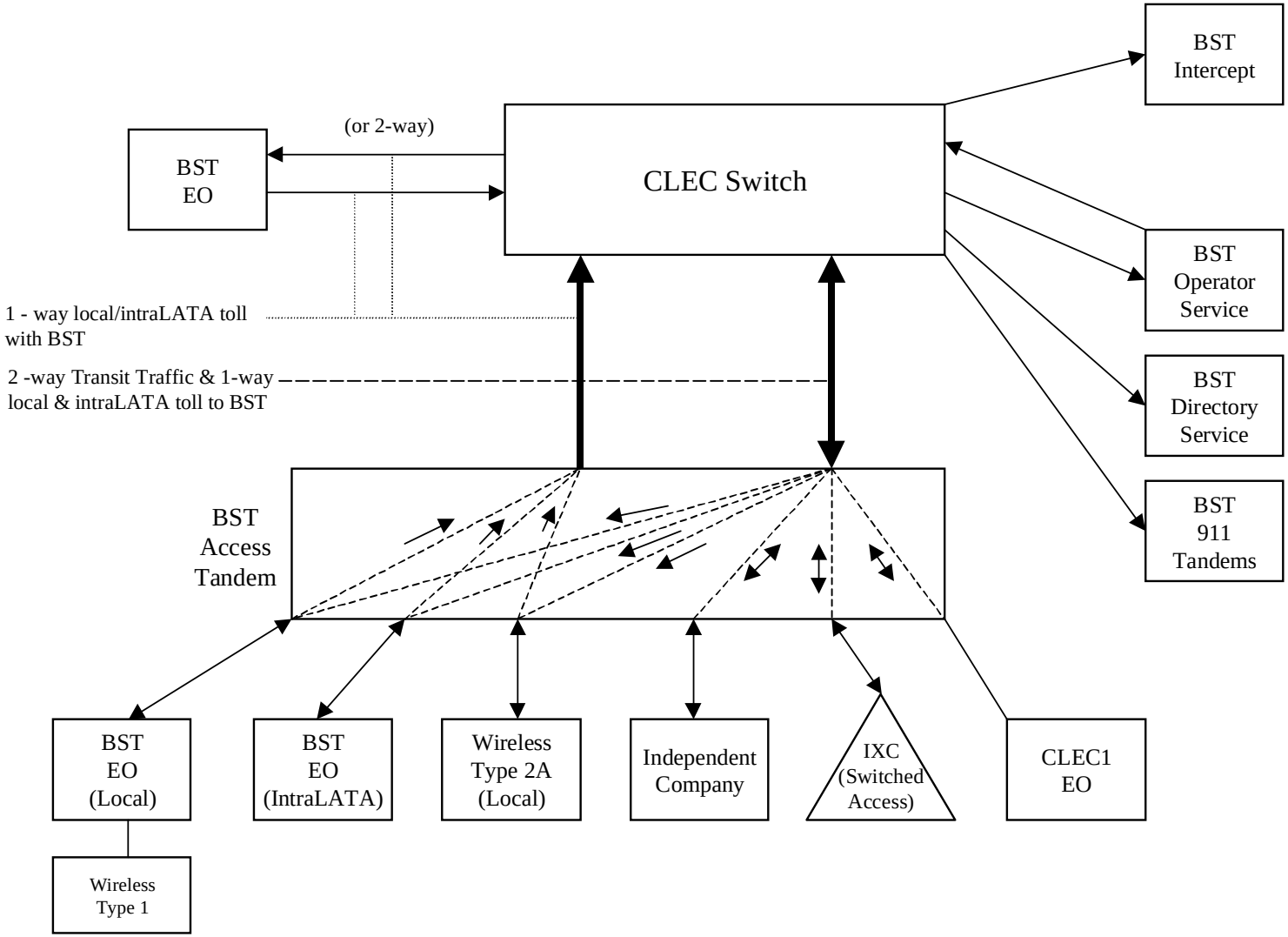

Exhibit C

One-Way Architecture

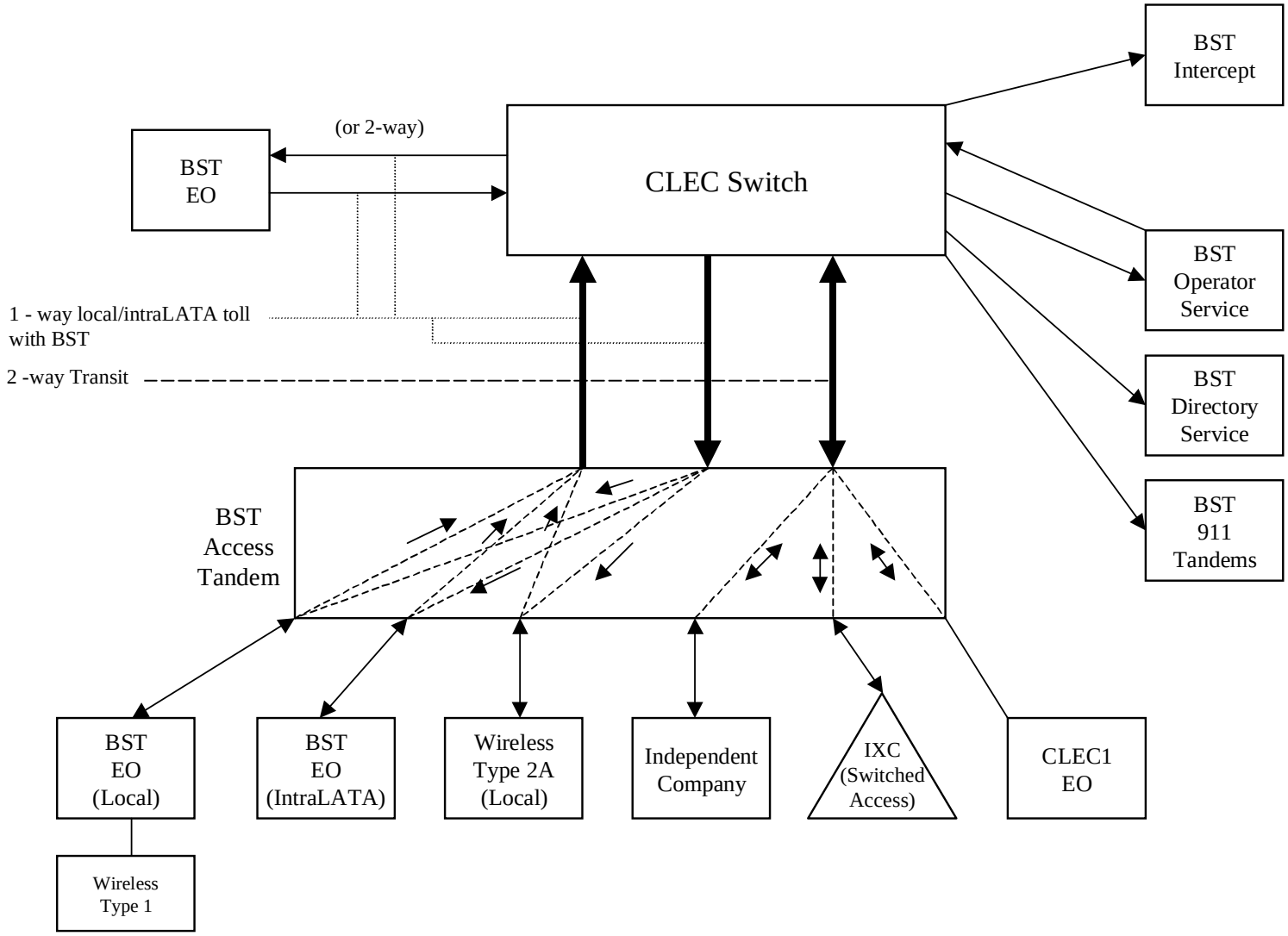

Exhibit D

Two-Way Architecture

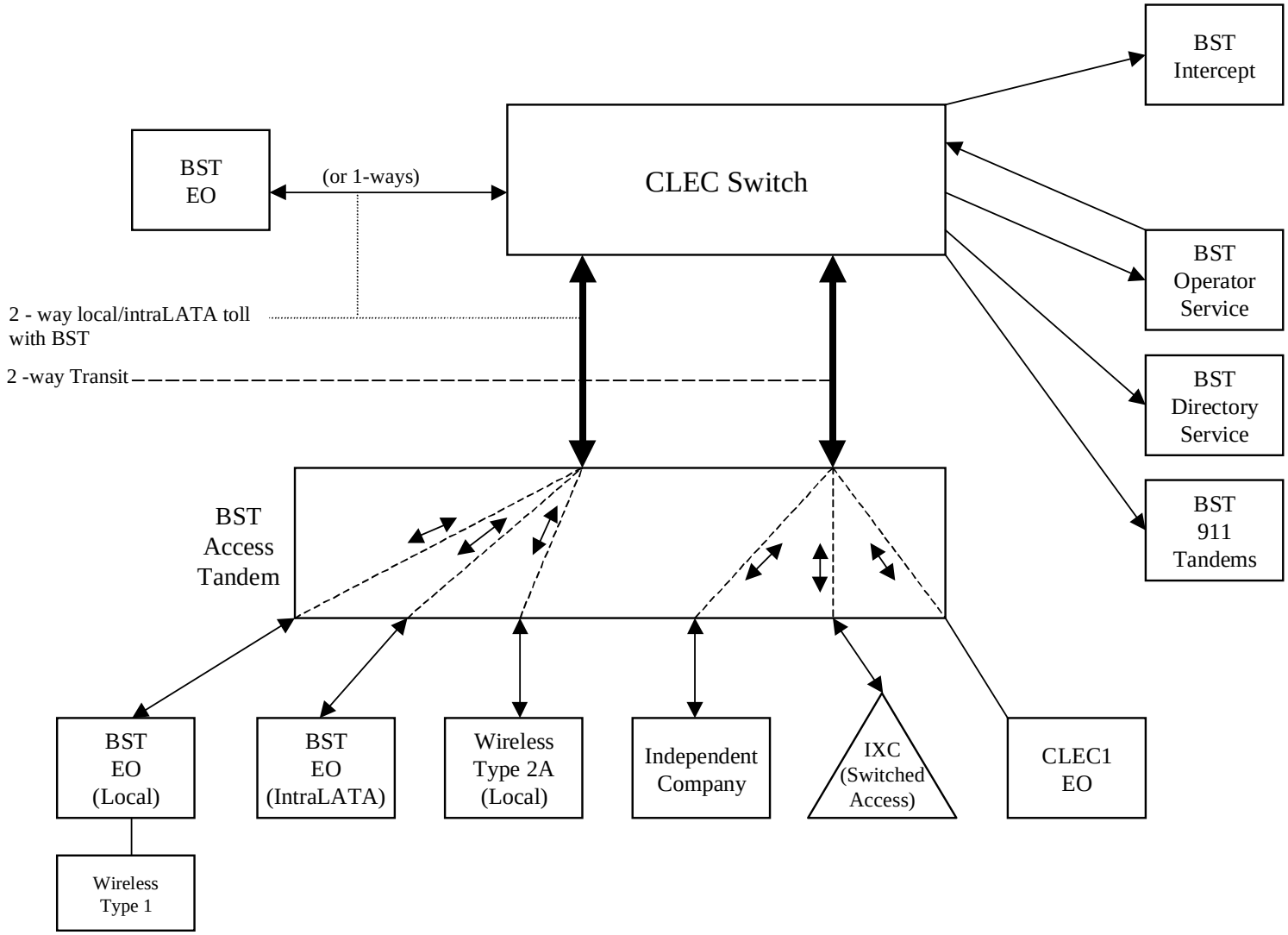

Exhibit E

Supergroup Architecture

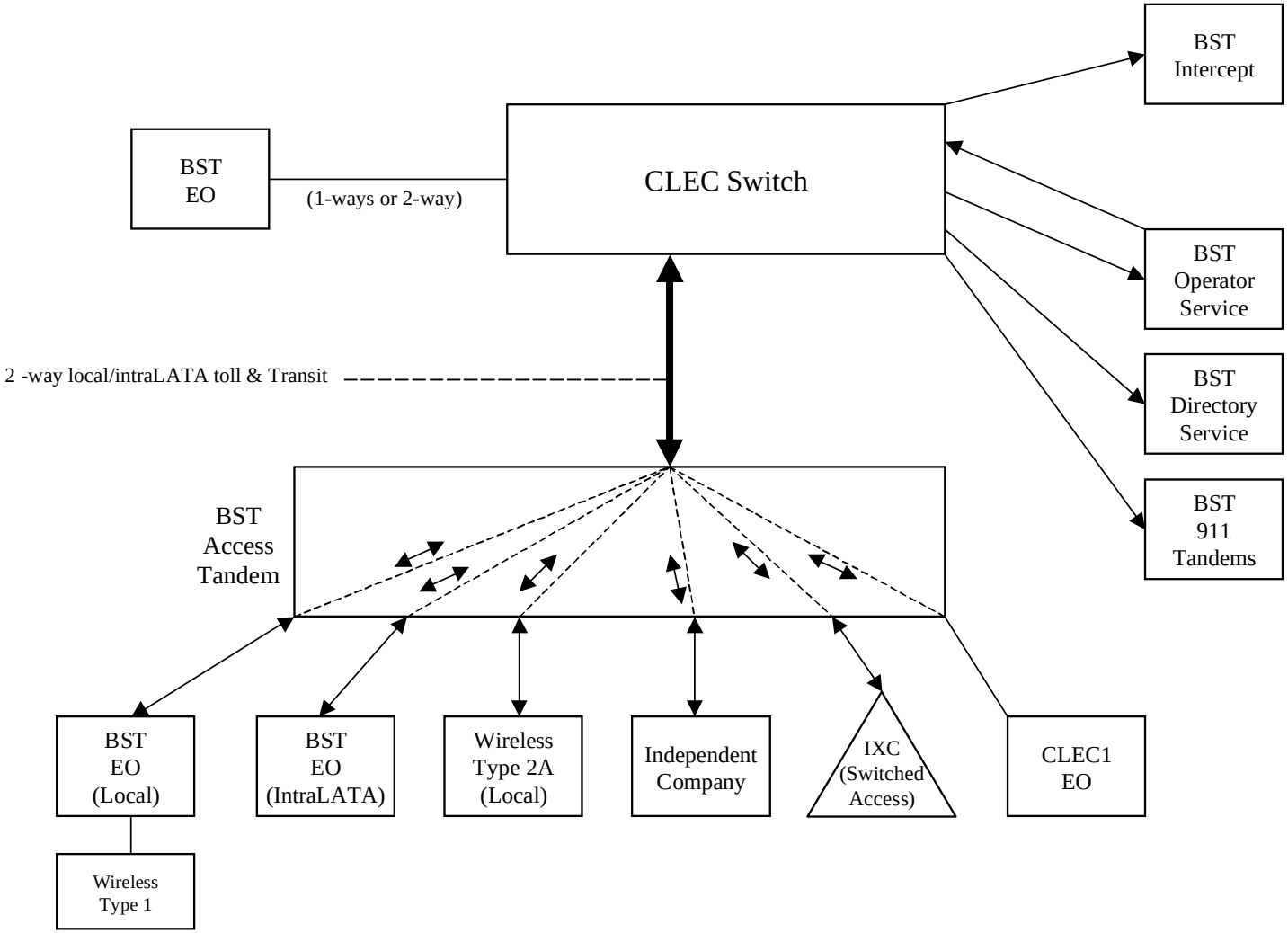

Attachment 10

Performance Measurements

PERFORMANCE MEASUREMENTS

Upon a particular Commission's issuance of an Order pertaining to Performance Measurements in a proceeding expressly applicable to all CLECs generally, BellSouth shall implement in that state such Performance Measurements as of the date specified by the Commission. Performance Measurements that have been Ordered in a particular state can currently be accessed via the internet at http://pmap.bellsouth.com. The following Service Quality Measurements (SQM) plan as it presently exists and as it may be modified in the future, is being included as the performance measurements currently in place for the state of Tennessee. At such time that the TRA issues a subsequent Order pertaining to Performance Measurements, such Performance Measurements shall supersede the SQM contained in the Agreement.

BellSouth Service Quality Measurement Plan (SQM)

Tennessee Performance Metrics

Measurement Descriptions
Version 2.00

Issue Date: July 1, 2003

Introduction

The BellSouth Service Quality Measurement Plan (SQM) describes in detail the measurements produced to evaluate the quality of service delivered to BellSouth's customers both wholesale and retail. The SQM was developed to respond to the requirements of the Communications Act of 1996 Section 251 (96 Act) which required BellSouth to provide non-discriminatory access to Competitive Local Exchange Carriers (CLEC)[1] and their Retail Customers. The reports produced by the SQM provide regulators, CLECs and BellSouth the information necessary to monitor the delivery of non-discriminatory access.

This plan results from the many divergent forces evolving from the 96 Act. The 96 Act, the Georgia Public Service Commission (GPSC) Order (Docket 7892-U 12/30/97), LCUG 1-7.0, the FCC's NPRM (CC Docket 98-56 RM9101 04/17/98), the Louisiana Public Service Commission (LPSC) Order (Docket U-22252 Subdocket C 04/19/98), numerous arbitration cases, LPSC sponsored collaborative workshops (10/98-02/00), and proceedings in Alabama, Florida, Mississippi, and North Carolina have and continue to influence the SQM. Per the Order in Docket 01-00193, issued by the Tennessee Regulatory Authority on October 4, 2002, this version of the SQM reflects the Florida Public Service Commission Order Nos. PSC-02-1736-PAA-TP, issued December 10, 2002, PSC-03-0529-PAA-TP, issued April 22, 2003 and PSC-03-0603-CO-TP, issued May 15, 2003.

The SQM and the reports flowing from it must change to reflect the dynamic requirements of the industry. New measurements are added as new products, systems, and processes are developed and fielded. New products and services are added as the markets for them develop and the processes stabilize. The measurements are also changed to reflect changes in systems, correct errors, and respond to both 3rd Party audit requirements and the Florida PSC.

This document is intended for use by someone with knowledge of the telecommunications industry, information technologies and a functional knowledge of the subject areas covered by the BellSouth Performance Measurements and the reports that flow from them.

Once it is approved, the most current copy of this document can be found on the web at URL: http://pmap.bellsouth.com in the Documentation/Exhibits folder.

Report Publication Dates

Each month, preliminary SQM reports will be posted to BellSouth's SQM web site (http://pmap.bellsouth.com) by 8:00 A.M. EST on the 21st day of each month or the first business day after the 21st. The validated SQM reports will be posted by 8:00 A.M. on the last day of the month. Reports not posted by this time will be considered late for SEEM payment purposes. Validated SEEM reports will be posted on the 15th of the following month. SEEM payments due will also be paid on the

[1] *Alternative Local Exchange Companies (ALEC) and Competing Local Providers (CLP) are referred to as Competitive Local Exchange Carriers (CLEC) in this document.*

15th of the following month. For instance: May data will be posted in preliminary SQM reports on June 21. Final validated SQM reports will be posted on the last day of the month. Final validated SEEM reports will be posted and payments mailed on the 15th of the following month. BellSouth shall retain the performance measurement raw data files for a period of 18 months and further retain the monthly reports produced in PMAP for a period of three years.

Report Delivery Methods

CLEC SQM and SEEM reports will be considered delivered when posted to the web site. The Tennessee Regulatory Authority has access to the web site. In addition, a copy of the SQM and Monthly State Summary reports will be filed with the TRA as soon as possible after the last day of each month.

Contents

Section 1: Operations Support Systems (OSS)

OSS-1: Average Response Interval and Percent within Interval (Pre-Ordering/Ordering) 4
OSS-2: OSS Availability (Pre-Ordering/Ordering) 7
OSS-3: OSS Availability (Maintenance & Repair) 9
OSS-4: Response Interval (Maintenance & Repair) 11
PO-1: Loop Makeup - Response Time – Manual 13
PO-2: Loop Makeup - Response Time - Electronic 15

Section 2: Ordering

O-1: Acknowledgement Message Timeliness 17
O-2: Acknowledgement Message Completeness 19
O-3: Percent Flow-Through Service Requests (Summary) 21
O-4: Percent Flow-Through Service Requests (Detail) 24
Flow-Through Error Analysis 27
O-6: CLEC LSR Information 29
O-7: Percent Rejected Service Requests 31
O-8: Reject Interval 34
O-9: Firm Order Confirmation Timeliness 38
O-10: Service Inquiry with LSR Firm Order Confirmation (FOC) Response Time Manual 42
O-11: Firm Order Confirmation and Reject Response Completeness 44
O-12: Speed of Answer in Ordering Center 46

Section 3: Provisioning

P-1: Mean Held Order Interval & Distribution Intervals 48
P-2: (Deleted) Average Jeopardy Notice Interval & Percentage of Orders Given Jeopardy Notices 51
P-2A: Jeopardy Notice Interval 52
P-2B: Percentage of Orders Given Jeopardy Notices 54
P-3: Percent Missed Initial Installation Appointments 57
P-3A: (Deleted) Percent Missed Installation Appointments Including Subsequent Appointment 60
P-4: Average Completion Interval (OCI) & Order Completion Interval Distribution 61
P-4A: (Deleted) Average Order Completion Interval (OCI) & Order Completion Interval Distribution 64
P-5: Average Completion Notice Interval 65
P-6: % Completions/Attempts without Notice or < 24 hours Notice 68
P-7: Coordinated Customer Conversions Interval 70
P-7A: Coordinated Customer Conversions – Hot Cut Timeliness% within Interval and Average Interval 72
P-7B: Coordinated Customer Conversions – Average Recovery Time 75
P-7C: Hot Cut Conversions - % Provisioning Troubles Received within 7 Days of a Completed Service Order 77
P-8: Cooperative Acceptance Testing - % of xDSL Loops Successfully Passing Cooperative Testing 79
P-9: % Provisioning Troubles within 30 Days of Service Order Completion 81
P-10: (Deleted) Total Service Order Cycle Time (TSOCT) 84
P-11: Service Order Accuracy 85
P-11A: Service Order Accuracy 87
P-12: (Deleted) LNP-Average Disconnect Timeliness Interval & Disconnect Timeliness Interval Distribution 90
P-13B: LNP-Percent Out of Service < 60 Minutes 91
P-13C: LNP-Percentage of Time BellSouth Applies the 10-Digit Trigger Prior to the LNP Order Due Date 93
P-13D: LNP-Average Disconnect Timeliness Interval Distribution (Non-Trigger) 95

Section 4: Maintenance & Repair

M&R-1: Missed Repair Appointments 97
M&R-2: Customer Trouble Report Rate 100
M&R-3: Maintenance Average Duration 103
M&R-4: Percent Repeat Troubles within 30 Days 106

M&R-5: Out of Service (OOS) > 24 Hours 109
M&R-6: Average Answer Time – Repair Centers 112
M&R-7: Mean Time To Notify CLEC of Network Outages 114

Section 5: Billing

B-1: Invoice Accuracy 116
B-2: Mean Time to Deliver Invoices 118
B-3: Usage Data Delivery Accuracy 120
B-4: Usage Data Delivery Completeness 122
B-5: Usage Data Delivery Timeliness 124
B-6: Mean Time to Deliver Usage 126
B-7: Recurring Charge Completeness 128
B-8: Non-Recurring Charge Completeness 130
B-9: Percent Daily Usage Feed Errors Corrected in "X" Business Days 132
B-10: Percent Billing Errors Corrected in "X" Business Days 134

Section 6: Operator Services and Directory Assistance

OS-1: Speed to Answer Performance/Average Speed to Answer - Toll 136
OS-2: Speed to Answer Performance/Percent Answered within "X" Seconds – Toll 138
DA-1: Speed to Answer Performance/Average Speed to Answer – Directory Assistance (DA) 140
DA-2: Speed to Answer Performance/Percent Answered within "X" Seconds – Directory Assistance (DA) 142

Section 7: Database Update Information

D-1: Average Database Update Interval 144
D-2: Percent Database Update Accuracy 146
D-3: Percent NXXs and LRNs Loaded by the LERG Effective Date 148

Section 8: E911

E-1: Timeliness 150
E-2: Accuracy 152
E-3: Mean Interval 153

Section 9: Trunk Group Performance

TGP-1: Trunk Group Performance-Aggregate 155
TGP-2: Trunk Group Performance-CLEC Specific 158

Section 10: Collocation

C-1: Collocation Average Response Time 161
C-2: Collocation Average Arrangement Time 163
C-3: Collocation Percent of Due Dates Missed 165

Section 11: Change Management

CM-1: Timeliness of Change Management Notices 167
CM-2: Change Management Notice Average Delay Days 169
CM-3: Timeliness of Documents Associated with Change 171
CM-4: Change Management Documentation Average Delay Days 173
CM-5: Notification of CLEC Interface Outages 175
CM-6: Percent of Software Errors Corrected in "X" (10, 30, 45) Business Days 177
CM-7: Percent of Change Requests Accepted or Rejected within 10 Days 179
CM-8: Percent Change Requests Rejected 180
CM-9: Number of Defects in Production Releases (Type 6 CR) 182
CM-10: Software Validations 184
CM-11: Percent of Change Requests Implemented within 60 Weeks of Prioritization 186

Appendix A: Reporting Scope
A-1: Standard Service Groupings 188
A-2: Standard Service Order Activities 188

Appendix B: Glossary of Acronyms and Terms
..... 189

Appendix C: BellSouth Audit Policy
C-1: BellSouth's Internal Audit Policy 199
C-2: BellSouth's External Audit Policy 199

Appendix D: OSS Tables
..... 200

Appendix E: Flow-Through Matrix
..... 205

Section 1: Operations Support Systems (OSS)

OSS-1: Average Response Interval and Percent within Interval (Pre-Ordering/Ordering)

Definition

The average response interval and percent within the Interval is the average times and percent of requests responded to within certain intervals for accessing legacy data associated with appointment scheduling, service and feature availability, address verification, request for Telephone numbers (TNs), and Customer Service Records (CSRs).

Exclusions

- Syntactically incorrect queries
- Scheduled OSS Maintenance
- Retail usage of LENS

Business Rules

The average response interval for retrieving pre-order/order information from a given legacy system is determined by summing the response times for all requests submitted to the legacy systems during the reporting period and dividing by the total number of legacy system requests for that month.

The response interval starts when the application (LENS or TAG for CLECs and RNS or ROS for BellSouth) submits a request to the legacy system and ends when the appropriate response is received by the client application. The percent of accesses to the legacy systems during the reporting period which take less than 2.3 seconds, the percent of accesses which take more than 6 seconds, and the percent which are less than or equal to 6.3 seconds are also captured. BellSouth will not schedule maintenance during the hours from 8:00 a.m. until 9:00 p.m., Monday through Friday.

Calculation

Response Interval = (a - b)

- a = Date and Time of Legacy Response
- b = Date and Time of Legacy Request

Average Response Interval = c / d

- c = Sum of Response Intervals
- d = Number of Legacy Requests During the Reporting Period

Percent within Interval = (e / f) X 100

- e = Count of requests within the designated Interval within the reporting period.
- f = Number of Legacy Requests during the Reporting Period for System for which a response was provided.

Report Structure

- Interface Type
- Not CLEC Specific
- Not Product/Service Specific
- Regional Level

Data Retained

Relating to CLEC Experience

- Report Month
- Legacy Contract (per reporting dimension)
- Response Interval
- Regional Scope

Relating to BellSouth Performance

- Report Month
- Legacy Contract (per reporting dimension)
- Response Interval
- Regional Scope

SQM Disaggregation - Analog/Benchmark

SQM Level of Disaggregation

- **RSAG – Address** (Regional Street Address Guide-Address) – stores street address information used to validate customer addresses. CLECs and BellSouth query this legacy system.
- **RSAG – TN** (Regional Street Address Guide-Telephone number) – contains information about facilities available and telephone numbers working at a given address. CLECs and BellSouth query this legacy system.
- **ATLAS** (Application for Telephone Number Load Administration and Selection) – acts as a warehouse for storing telephone numbers that are available for assignment by the system. It enables CLECs and BellSouth service reps to select and reserve telephone numbers. CLECs and BellSouth query this legacy system.
- **COFFI** (Central Office Feature File Interface) – stores information about product and service offerings and availability. CLECs query this legacy system.
- **DSAP** (DOE Support Application) – provides due date information. CLECs and BellSouth query this legacy system.
- **CRIS** (Customer Record Information System) – Source of CSR (Customer Service Record) information. Contains information about individual customers including listings, addresses, features, services, etc. CLECs and BellSouth can query for CSR information.
- **P/SIMS** (Product/Services Inventory Management system) – provides information on capacity, tariffs, inventory and service availability. CLECs query this legacy system.
- **OASIS** (Obtain Available Services Information Systems) – Information on feature and rate availability. BellSouth queries this legacy system.

SQM Analog/Benchmark

- Parity + 2 seconds

(See Appendix D: Tables for SQM OSS Legacy Access Times)

SEEM Measure

SEEM	Tier I	Tier II	Tier III
Yes	.....	.....	X .....

SEEM Disaggregation - Analog/Benchmark

SEEM Disaggregation

- **RSAG – Address** (Regional Street Address Guide-Address) – stores street address information used to validate customer addresses. CLECs and BellSouth query this legacy system.
- **RSAG – TN** (Regional Street Address Guide-Telephone number) – contains information about facilities available and telephone numbers working at a given address. CLECs and BellSouth query this legacy system.
- **ATLAS** (Application for Telephone Number Load Administration and Selection) – acts as a warehouse for storing telephone

numbers that are available for assignment by the system. It enables CLECs and BellSouth service reps to select and reserve telephone numbers. CLECs and BellSouth query this legacy system.

- **COFFI** (Central Office Feature File Interface) – stores information about product and service offerings and availability. CLECs query this legacy system.
- **DSAP** (DOE Support Application) – provides due date information. CLECs and BellSouth query this legacy system.
- **CRIS** (Customer Record Information System) – Source of CSR (Customer Service Record) information. Contains information about individual customers including listings, addresses, features, services, etc. CLECs and BellSouth can query for CSR information.
- **P/SIMS** (Product/Services Inventory Management system) – provides information on capacity, tariffs, inventory and service availability. CLECs query this legacy system.
- **OASIS** (Obtain Available Services Information Systems) – Information on feature and rate availability. BellSouth queries this legacy system.

SEEM Analog/Benchmark

- Parity + 2 Seconds

(See Appendix D: Tables for SEEM OSS Legacy Systems)

OSS-2: OSS Availability (Pre-Ordering/Ordering)

Definition

Percent of time OSS interface is functionally available compared to scheduled availability. Availability percentages for CLEC interface and for all Legacy systems accessed by them are captured. ("Functional Availability" is the amount of time in hours during the reporting period that the legacy systems are available to users. The planned System Scheduled Availability is the time in hours per day that the legacy system is scheduled to be available.)

Scheduled availability is posted on the Interconnection website: (www.interconnection.bellsouth.com/oss/osshour.html)

Exclusions

- CLEC impacting troubles caused by factors outside of BellSouth's purview, e.g., troubles in customer equipment, troubles in networks owned by telecommunications companies other than BellSouth, etc.
- Degraded service outages which are defined as a critical function that is normally performed by the CLEC or is normally provided by an application or system available to the CLEC, but with significantly reduced response or processing time.
- Scheduled OSS Maintenance

Business Rules

This measurement captures the functional availability of applications/interfaces as a percentage of scheduled availability for the same systems. Only full and Loss of Functionality outages are included in the calculation for this measure. Full outages are defined as occurrences of either of the following:

- Application/Interface application is down or totally inoperative.
- Application is totally inoperative for customers attempting to access or use the application. This includes transport outages when they may be directly associated with a specific application.
- Loss of Functionality outages are defined as:
  - A critical function that is normally performed by the CLEC or is normally provided by an application or system is temporarily unavailable to the CLEC.

Comparison to an internal benchmark provides a vehicle for determining whether or not CLECs and retail BellSouth entities are given comparable opportunities for use of pre-ordering and ordering systems.

(Note: Scheduled maintenance will not be performed between the hours of 8:00 a.m through 9:00 p.m. Monday through Friday.)

Calculation

OSS Availability (Pre-Ordering/Ordering) = (a / b) X 100

- a = Functional Availability
- b = Scheduled Availability

Report Structure

- Interface Type
- Not CLEC Specific
- Not Product/Service Specific
- Regional Level

Data Retained

Relating to CLEC Experience

- Report Month
- Legacy Contract Type (per reporting dimension)
- Regional Scope
- Hours of Downtime

Relating to BellSouth Performance

- Report Month
- Legacy Contract Type (per reporting dimension)
- Regional Scope
- Hours of Downtime

SQM Disaggregation - Analog/Benchmark

SQM Level of Disaggregation	SQM Analog/Benchmark
• Regional Level, Per OSS Interface	>= 99.5%

(See Appendix D: Tables for SQM OSS Availability)

SEEM Measure

SEEM	Tier I	Tier II
Yes		X

SEEM Disaggregation - Analog/Benchmark

SEEM Disaggregation	SEEM Analog/Benchmark
• Regional Level, Per OSS Interface	>= 99.5%

(See Appendix D: Tables for SEEM OSS Availability)

OSS-3: OSS Availability (Maintenance & Repair)

Definition

Percent of time applications are functionally available as compared to scheduled availability. Calculations are based upon availability of applications and interfacing applications utilized by CLECs for maintenance and repair. "Functional Availability" is defined as the number of hours in the reporting period that the applications/interfaces are available to users. "Scheduled Availability" is defined as the number of hours in the reporting period that the applications/interfaces are scheduled to be available.

Scheduled availability is posted on the Interconnection website: (www.interconnection.bellsouth.com/oss/osshour.html)

Exclusions

- CLEC-impacting trouble caused by factors outside of BellSouth's purview, e.g., troubles in customer equipment, troubles in networks owned by telecommunications companies other than BellSouth, etc.
- Degraded service outages which are defined as a critical function that is normally performed by the CLEC or is normally provided by an application or system available to the CLEC, but with significantly reduced response or processing time.

Business Rules

This measurement captures the functional availability of applications/interfaces as a percentage of scheduled availability for the same systems. Only full outages are included in the calculations for this measure. Full outages are defined as occurrences of either of the following:

- Application/interfacing application is down or totally inoperative.
- Application is totally inoperative for customers attempting to access or use the application. This includes transport outages when they may be directly associated with a specific application.

Loss of Functionality outages are defined as:

- A critical function that is normally performed by the CLEC or is normally provided by an application or system is temporarily unavailable to the CLEC.

Comparison to an internal benchmark provides a vehicle for determining whether or not CLECs and retail BellSouth entities are given comparable opportunities for use of maintenance and repair systems.

Calculation

OSS Availability (a / b) X 100

- a = Functional Availability
- b = Scheduled Availability

Report Structure

- Interface Type
- Not CLEC Specific
- Not Product/Service Specific
- Regional Level

Data Retained

Relating to CLEC Experience

- Availability of CLEC TAFI

- Availability of LMOS HOST, MARCH, SOCS, CRIS, PREDICTOR, LNP and OSPCM
- ECTA

Relating to BellSouth Performance

- Availability of BellSouth TAFI
- Availability of LMOS HOST, MARCH, SOCS, CRIS, PREDICTOR, LNP and OSPCM

SQM Disaggregation - Analog/Benchmark

SQM Level of Disaggregation	SQM Analog/Benchmark
• Regional Level, Per OSS Interface	>= 99.5%

(See Appendix D: Tables for OSS Availability (M&R)

SEEM Measure

SEEM	Tier I	Tier II
Yes		X

SEEM Disaggregation - Analog/Benchmark

SEEM Disaggregation	SEEM Analog/Benchmark
• Regional Level, Per OSS Interface	>= 99.5%

(See Appendix D: Tables for SEEM OSS Availability (M&R)

OSS-4: Response Interval (Maintenance & Repair)

Definition

The response intervals are determined by subtracting the time a request is received on the BellSouth side of the interface from the time the response is received from the legacy system. Percentages of requests falling into each interval category are reported, along with the actual number of requests falling into those categories.

Exclusions

None

Business Rules

This measure is designed to monitor the time required for the CLEC and BellSouth interface system to obtain from BellSouth's legacy systems the information required to handle maintenance and repair functions. The clock starts on the date and time when the request is received on the BellSouth side of the interface and the clock stops when the response has been transmitted through that same point to the requester.

Note: The OSS Response Interval BellSouth Total Report is a combination of BellSouth Residence and Business Total.

Calculation

OSS Response Interval = (a - b)

- a = Query Response Date and Time
- b = Query Request Date and Time

Percent Response Interval (per category) = (c / d) X 100

- c = Number of Response Intervals in category "X"
- d = Number of Queries Submitted in the Reporting Period

  where, "X" is <= 4, > 4 <= 10, <= 10, > 10, or > 30 seconds.

Average Interval = (e / f)

- e = Sum of Response Intervals
- f = Number of Queries Submitted in the Reporting Period

Report Structure

- Not CLEC Specific
- Not Product/Service Specific
- Regional Level

Data Retained

Relating to CLEC Experience

- CLEC Transaction Intervals

Relating to BellSouth Performance

- BellSouth Business and Residential Transactions Intervals

SQM Disaggregation - Analog/Benchmark

SQM Level of Disaggregation	SQM Analog/Benchmark
• Regional Level, Per OSS Interface	Parity with Retail

(See Appendix D: Tables for Legacy System Access Times for M&R)

Note: BellSouth's Appendix D lists the query functions and the appropriate legacy systems that the queries travel through to return a response.

SEEM Measure

SEEM	Tier I	Tier II
Yes		X

SEEM Disaggregation - Analog/Benchmark

SEEM Disaggregation	SEEM Analog/Benchmark
• Region Level, Per OSS Interface	Parity with Retail

PO-1: Loop Makeup - Response Time – Manual

Definition

This report measures the average interval and percent within the interval from the submission of a Manual Loop Makeup Service Inquiry (LMUSI) to the distribution of Loop Makeup information back to the CLEC.

Exclusions

- Inquiries, which are submitted electronically
- Designated Holidays are excluded from the interval calculation
- Weekends are excluded from the interval calculation
- Canceled Inquiries

Business Rules

The CLEC Manual Loop Makeup Service Inquiry (LMUSI) process includes inquiries submitted via E-mail or FAX to BellSouth's Complex Resale Support Group (CRSG)

This measurement combines three intervals:

1. From receipt of a valid Service Inquiry for Loop Makeup to hand off to the Service Advocacy Center (SAC) for "Look-up."
2. From SAC start date to SAC complete date
3. From SAC complete date to date the Complex Resale Support Group (CRSG) distributes loop makeup information back to the CLEC.

The "Receive Date" is defined as the date the Manual LMUSI is received by the CRSG. It is counted as day Zero. LMU "Return Date" is defined as the date the LMU information is sent back to the CLEC from BellSouth. The interval calculation is reset to Zero when a CLEC initiated change occurs on the Manual LMU request.

Note: The Loop Makeup Service Inquiry Form does not require the CLEC to furnish the type of Loop. The CLEC determines whether the loop makeup will support the type of service they wish to order or not and qualifies the loop. If the loop makeup will support the service, a firm order LSR is submitted by the CLEC.

(A valid Service Inquiry is an inquiry that has all required fields populated correctly and has not been returned for clarification.)

Calculation

Response Interval = (a - b)

- a = Date the LMUSI returned to CLEC
- b = Date the LMUSI is received

Average Interval = (c / d)

- c = Sum of all Response Intervals
- d = Total Number of LMUSIs received within the reporting period

Percent within interval = (e / f) X 100

- e = Total LMUSIs received within the interval
- f = Total Number of LMUSIs processed within the reporting period

Report Structure

- CLEC Aggregate
- CLEC Specific
- Geographic Scope
  - State
  - Region
- Interval for manual LMUs:
  0 – <=1 day
  >1 – <= 2 days
  >2 – <= 3 days
  0 - <= 3 days
  >3 – <= 6 days
  >6 – <= 10 days
  > 10 days
- Average Interval in days

Data Retained

Relating to CLEC Experience

- Report Month
- Total Number of Inquiries
- SI Intervals
- State and Region

Relating to BellSouth Performance

SQM Disaggregation - Analog/Benchmark

SQM Level of Disaggregation	SQM Analog/Benchmark
• Loops	Benchmark: 95% <= 3 Business Days

SEEM Measure

SEEM	Tier I	Tier II
Yes	X	X

SEEM Disaggregation - Analog/Benchmark

SEEM Disaggregation	SEEM Analog/Benchmark
• Loops	Benchmark: 95% <= 3 Business Days

PO-2: Loop Makeup - Response Time - Electronic

Definition

This report measures the average interval and the percent within the interval from the electronic submission of a Loop Makeup Service Inquiry (LMUSI) to the distribution of Loop Makeup information back to the CLEC.

Exclusions

- Manually submitted inquiries
- Canceled Requests

Business Rules

The response interval starts when the CLEC's Mechanized Loop Makeup Service Inquiry (LMUSI) is submitted electronically through the Operational Support Systems interface, TAG. It ends when BellSouth's Loop Facility Assignment and Control System (LFACS) responds electronically to the CLEC with the requested Loop Makeup data via the TAG Interface. LSRs submitted via LENs will be reflected in the results for the TAG interface.

> **Note**: The Loop Makeup Service Inquiry Form does not require the CLEC to furnish the type of Loop. The CLEC determines whether the loop makeup will support the type of service they wish to order or not and qualifies the loop. If the loop makeup will support the service, a firm order LSR is submitted by the CLEC. EDI is not a pre-ordering system, and, therefore, is not applicable in this measure.

Calculation

Response Interval = (a - b)

- a = Date and Time the LMUSI returned to CLEC
- b = Date and Time the LMUSI is received

Average Interval = (c / d)

- c = Sum of all response intervals
- d = Total Number of LMUSIs received within the reporting period

Percent within interval = (e / f) X 100

- e = Total LMUSIs received within the interval
- f = Total Number of LMUSIs processed within the reporting period

Report Structure

- CLEC Aggregate
- CLEC Specific
- Geographic Scope
  - State
  - Region
- Interval for electronic LMUs:
  0 – <= 1 minute
  >1 – <= 5 minutes
  0 - <= 5 minutes
  > 5 – <= 8 minutes
  > 8 – <= 15 minutes

> 15 minutes
- Average Interval in minutes

Data Retained

Relating to CLEC Experience

- Report Month
- Total Number of Inquires
- SI Interval
- State and Region

Relating to BellSouth Performance

- Not Applicable

SQM Disaggregation - Analog/Benchmark

SQM Level of Disaggregation	SQM Analog/Benchmark
• Loop	Benchmark: 95% <= 1 Minute

SEEM Measure

SEEM	Tier I	Tier II
Yes	X	X

SEEM Disaggregation - Analog/Benchmark

SEEM Disaggregation	SEEM Analog/Benchmark
• Loop	95% <= 1 Minute

Section 2: Ordering

O-1: Acknowledgement Message Timeliness

Definition

This measurement provides the response interval and percent within the interval from the time an LSR or transmission (may contain multiple LSRs from one or more CLECs in multiple states) is electronically submitted via EDI or TAG until an acknowledgement notice is sent by the system.

Exclusions

- Scheduled OSS Maintenance
- Manually Submitted LSRs

Business Rules

The process includes EDI and TAG system functional acknowledgements for all Local Service Requests (LSRs) which are electronically submitted by the CLEC. The start time is the receipt time of the LSR at BellSouth's side of the interface (gateway). The end time is when the acknowledgement is transmitted by BellSouth at BellSouth's side of the interface (gateway). For those CLECs using EDI, if more than one CLEC uses the same ordering center, an Acknowledgement Message will be returned to the "Aggregator", however, BellSouth will not be able to determine which specific CLEC this message represented.

Calculation

Response Interval = (a - b)

- a = Date and Time Acknowledgement Notices returned to CLEC
- b = Date and Time Messages/LSRs electronically submitted by the CLEC via EDI or TAG respectively

Average Response Interval = (c / d)

- c = Sum of all Response Intervals for returned acknowledgements
- d = Total number of electronically submitted Messages/LSRs received, via EDI or TAG respectively, for which Acknowledgement Notices were returned in the Reporting Period.

Percent within Interval = (e / f) X 100

- e = Total number of electronically submitted messages/LSRs received, from CLEC via EDI or TAG respectively, in the Reporting Period.
- f = Total number of electronically submitted messages/LSRs acknowledged in the Reporting Period.

Reporting Structure

- CLEC Aggregate
- CLEC Specific
- Geographic Scope
  - Region
- Electronically Submitted LSRs
  0 – <=10 minutes
  > 10 – <= 20 minutes
  > 20 – <= 30 minutes
  0 – <= 30 minutes
  > 30 – <= 45 minutes
  > 45 – <= 60 minutes

> 60 – <= 120 minutes
> 120 minutes

- Average interval for electronically submitted LSRs in minutes

Data Retained

Relating to CLEC Experience

- Report Month
- Record of Functional Acknowledgements

Relating to BellSouth Performance

- Not Applicable

SQM Disaggregation - Analog/Benchmark

SQM Level of Disaggregation	SQM Analog/Benchmark
EDI	EDI – 95% <= 30 Minutes
TAG	TAG – 95% <= 30 Minutes

SEEM Measure

SEEM	Tier I	Tier II
Yes	X	X

SEEM Disaggregation - Analog/Benchmark

SEEM Disaggregation	SEEM Analog/Benchmark
EDI	EDI – 95% <= 30 Minutes
TAG	TAG – 95% <= 30 Minutes

O-2: Acknowledgement Message Completeness

Definition

This measurement provides the percent of Messages/LSRs received via EDI or TAG, which are acknowledged electronically.

Exclusions

Manually submitted LSRs

Business Rules

EDI and TAG send Functional Acknowledgements for all LSRs, which are electronically submitted by a CLEC. For those CLECs using EDI, if more than one CLEC uses the same ordering center, an Acknowledgement Message will be returned to the "Aggregator", however, BellSouth will not be able to determine which specific CLEC this message represented. The Acknowledgement Message is returned prior to the determination of whether the LSR will be partially mechanized or fully mechanized.

Calculation

Acknowledgement Completeness = (a / b) X 100

- a = Total number of Functional Acknowledgements returned in the reporting period for Messages/LSRs electronically submitted by EDI or TAG respectively
- b = Total number of electronically submitted Messages/LSRs received in the reporting period by EDI or TAG respectively

Report Structure

- CLEC Aggregate
- CLEC Specific
- Geographic Scope
  - Region

Note: Acknowledgement message is generated before the system recognizes whether this message (LSR) will be partially or fully mechanized.

Data Retained

Relating to CLEC Experience

- Report Month
- Record of Functional Acknowledgements

Relating to BellSouth Performance

- Not Applicable

SQM Disaggregation - Analog/Benchmark

SQM Level of Disaggregation	SQM Analog/Benchmark
EDI	Benchmark: 99.9%
TAG	Benchmark: 99.5%

SEEM Measure

SEEM	Tier I	Tier II
Yes	X	X

SEEM Disaggregation - Analog/Benchmark

SEEM Disaggregation	SEEM Analog/Benchmark
• EDI	Benchmark: 99.9%
• TAG	Benchmark: 99.5%

O-3: Percent Flow-Through Service Requests (Summary)

Definition

The percentage of Local Service Requests (LSR) and LNP Local Service Requests (LNP LSRs) submitted electronically via the CLEC mechanized ordering process that flow through and reach a status for a FOC to be issued, without manual intervention.

Exclusions

- Fatal Rejects
- Auto Clarification
- Manual Fallout for Percent Flow-Through only
- CLEC System Fallout
- Scheduled OSS Maintenance

Business Rules

The CLEC mechanized ordering process includes all LSRs, including supplements (subsequent versions) which are submitted through one of the three gateway interfaces (TAG, EDI and LENS), that flow through and reach a status for a FOC to be issued, without manual intervention. These LSRs can be divided into two classes of service: Business and Residence, and two types of service: Resale, and Unbundled Network Elements (UNE). The CLEC mechanized ordering process does not include LSRs which are submitted manually (for example, fax and courier) or are not designed to flow through (for example, Manual Fallout.)

Definitions:

Fatal Rejects: Errors that prevent an LSR, submitted electronically by the CLEC, from being processed further. When an LSR is submitted by a CLEC, LEO/LNP Gateway will perform edit checks to ensure the data received is correctly formatted and complete. For example, if the PON field contains an invalid character, LEO/LNP Gateway will reject the LSR and the CLEC will receive a Fatal Reject.

Auto-Clarification: Clarifications that occur due to invalid data within the LSR. LESOG/LAUTO will perform data validity checks to ensure the data within the LSR is correct and valid. For example, if the address on the LSR is not valid according to RSAG, or if the LNP is not available for the NPA NXX requested, the CLEC will receive an Auto-Clarification.

Manual Fallout: Planned Fallout that occur by design. Certain LSRs are designed to fallout of the Mechanized Order Process due to their complexity. These LSRs are manually processed by the LCSC. When a CLEC submits an LSR, LESOG/LAUTO will determine if the LSR should be forwarded to LCSC for manual handling. Following are the categories for Manual Fallout:

1. Complex*
2 Special pricing plans
3. Some Partial migrations (All LNP Partial Migrations)
4. New telephone number not yet posted to BOCRIS
5. Pending order review required
6. CSR inaccuracies such as invalid or missing CSR data in CRIS
7. Expedites (requested by the CLEC)
8. Denials-restore and conversion, or disconnect and conversion orders
9. Class of service invalid in certain states with some types of service
10. Low volume such as activity type “T” (move)
11. More than 25 business lines, or more than 15 loops
12. Transfer of calls option for the CLEC end users
13. Directory Listings (Identions and Captions)
14. LNP Only – Supplement LSRs except supps of O-2 (Due Date Changes) on Req Type CB

*See LSR Flow-Through Matrix in Appendix E for a list of services, including complex services, and whether LSRs issued for the services are eligible to flow through. The matrix is updated automatically when new services are added or the systems are improved to allow a service to flow through. The current version of the Flow-Through Matrix is on the PMAP website (http://pmap.bellsouth.com) in the

Documentation/Exhibits folder. Any change in the flow-through order category from flow-through to non-flow-through shall require prior Commission approval.

Total System Fallout: Errors that require manual review by the LCSC to determine if the error is caused by the CLEC, or is due to BellSouth system functionality. If it is determined the error is caused by the CLEC, the LSR will be sent back to the CLEC for clarification. If it is determined the error is BellSouth caused, the LCSC representative will correct the error, and the LSR will continue to be processed.

Z Status: LSRs that receive a supplemental LSR submission prior to final disposition of the original LSR.

Calculation

Percent Flow Through = a / [b - (c + d + e + f)] X 100

- a = the total number of LSRs that flow through LESOG/LAUTO and reach a status for a FOC to be issued
- b = the number of LSRs passed from LEO/LNP Gateway to LESOG/LAUTO
- c = the number of LSRs that fallout for manual processing
- d = the number of LSRs that are returned to the CLEC for auto clarification
- e = the number of LSRs that are returned to the CLEC from the LCSC due to CLEC clarification
- f = the number of LSRs that receive a Z status.

Percent Achieved Flow Through = a / [b - (c + d + e)] X 100

- a = the number of LSRs that flow through LESOG/LAUTO and reach a status for a FOC to be issued.
- b = the number of LSRs passed from LEO/LNP Gateway to LESOG/LAUTO
- c = the number of LSRs that are returned to the CLEC for auto clarification
- d = the number of LSRs that are returned to the CLEC from the LCSC due to CLEC clarification
- e = the number of LSRs that receive Z status

Report Structure

- CLEC Aggregate
  - Region

Data Retained

Relating to CLEC Experience

- Report Month
- Total Number of LSRs Received, by Interface, by CLEC
  - TAG
  - EDI
  - LENS
- Total Number of Errors by Type, by CLEC
  - Fatal Rejects
  - Auto Clarification
  - CLEC Caused System Fallout
- Total Number of Errors by Error Code
- Total Fallout for Manual Processing

Relating to BellSouth Performance

- Report Month
- Total Number of Errors by Type
  - BellSouth System Error

SQM Disaggregation - Analog/Benchmark

SQM Level of Disaggregation	SQM Analog/Benchmark[a]
• Residence	Benchmark: 95%
• Business	Benchmark: 90%
• UNE - Loops	Benchmark: 85%
• UNE-P	Benchmark: 90%
• LNP	Benchmark: 85%

SEEM Measure

SEEM	Tier I	Tier II
Yes		X

SEEM Disaggregation - Analog/Benchmark

SEEM Disaggregation	SEEM Analog/Benchmark[a]
• Residence	Benchmark: 95%
• Business	Benchmark: 90%
• UNE - Loops	Benchmark: 85%
• UNE-P	Benchmark: 90%
• LNP	Benchmark: 85%

[a] *Benchmarks do not apply to the "Percent Achieved Flow-Through."*

O-4: Percent Flow-Through Service Requests (Detail)

Definition

A detailed list, by CLEC, of the percentage of Local Service Requests (LSR) and LNP Local Service Requests (LNP LSRs) submitted electronically via the CLEC mechanized ordering process that flow through and reach a status for a FOC to be issued, without manual or human intervention.

Exclusions

- Fatal Rejects
- Auto Clarification
- Manual Fallout for Percent Flow-Through only
- CLEC System Fallout
- Scheduled OSS Maintenance

Business Rules

The CLEC mechanized ordering process includes all LSRs, including supplements (subsequent versions) which are submitted through one of the three gateway interfaces (TAG, EDI, and LENS), that flow through and reach a status for a FOC to be issued, without manual intervention. These LSRs can be divided into two classes of service: Business and Residence, and two types of service: Resale, and Unbundled Network Elements (UNE). The CLEC mechanized ordering process does not include LSRs, which are submitted manually (for example, fax and courier) or are not designed to flow through (for example, Manual Fallout.)

Definitions:

Fatal Rejects: Errors that prevent an LSR, submitted electronically by the CLEC, from being processed further. When an LSR is submitted by a CLEC, LEO/LNP Gateway will perform edit checks to ensure the data received is correctly formatted and complete. For example, if the PON field contains an invalid character, LEO/LNP Gateway will reject the LSR and the CLEC will receive a Fatal Reject.

Auto-Clarification: Clarifications that occur due to invalid data within the LSR. LESOG/LAUTO will perform data validity checks to ensure the data within the LSR is correct and valid. For example, if the address on the LSR is not valid according to RSAG, or if the LNP is not available for the NPA NXX requested, the CLEC will receive an Auto-Clarification.

Manual Fallout: Planned Fallout that occur by design. Certain LSRs are designed to fallout of the Mechanized Order Process due to their complexity. These LSRs are manually processed by the LCSC. When a CLEC submits an LSR, LESOG/LAUTO will determine if the LSR should be forwarded to LCSC for manual handling. Following are the categories for Manual Fallout:

1. Complex*
2 Special pricing plans
3. Some Partial migrations (All LNP Partial Migrations)
4. New telephone number not yet posted to BOCRIS
5. Pending order review required
6. CSR inaccuracies such as invalid or missing CSR data in CRIS
7. Expedites (requested by the CLEC)
8. Denials-restore and conversion, or disconnect and conversion orders
9. Class of service invalid in certain states with some types of service
10. Low volume such as activity type “T” (move)
11. More than 25 business lines, or more than 15 loops
12. Transfer of calls option for the CLEC end users
13. Directory Listings (Identions and Captions)
14. LNP Only – Supplement LSRs except supps of O-2 (Due Date Changes) on Req Type CB

*See LSR Flow-Through Matrix in Appendix E for a list of services, including complex services, and whether LSRs issued for the services are eligible to flow through. The matrix is updated automatically when new services are added or the systems are improved to allow a service to flow through. The current version of the Flow-Through Matrix is on the PMAP website (http://pmap.bellsouth.com) in the

Documentation/Exhibits folder. Any change in the flow-through order category from flow-through to non-flow-through shall require prior Commission approval.

Total System Fallout: Errors that require manual review by the LCSC to determine if the error is caused by the CLEC, or is due to BellSouth system functionality. If it is determined the error is caused by the CLEC, the LSR will be sent back to the CLEC for clarification. If it is determined the error is BellSouth caused, the LCSC representative will correct the error, and the LSR will continue to be processed.

Z Status: LSRs that receive a supplemental LSR submission prior to final disposition of the original LSR.

Calculation

Percent Flow Through = a / [b - (c + d + e + f)] X 100

- a = the total number of LSRs that flow through LESOG/LAUTO and reach a status for a FOC to be issued
- b = the number of LSRs passed from LEO/LNP Gateway to LESOG/LAUTO
- c = the number of LSRs that fallout for manual processing
- d = the number of LSRs that are returned to the CLEC for auto clarification
- e = the number of LSRs that are returned to the CLEC from the LCSC due to CLEC clarification
- f = the number of LSRs that receive a Z status.

Percent Achieved Flow Through = a / [b - (c + d + e)] X 100

- a = the number of LSRs that flow through LESOG/LAUTO and reach a status for a FOC to be issued
- b = the number of LSRs passed from LEO/LNP Gateway to LESOG/LAUTO
- c = the number of LSRs that are returned to the CLEC for auto clarification
- d = the number of LSRs that are returned to the CLEC from the LCSC due to CLEC clarification
- e = the number of LSRs that receive Z status

Report Structure

Provides the flow through percentage for each CLEC (by alias designation) submitting LSRs through the CLEC mechanized ordering process. The report provides the following:

- CLEC (by alias designation)
- Number of fatal rejects
- Mechanized interface used
- Total mechanized LSRs
- Total manual fallout
- Number of auto clarifications returned to CLEC
- Number of validated LSRs
- Number of BellSouth caused fallout
- Number of CLEC caused fallout
- Number of Service Orders Issued
- Base calculation
- CLEC error excluded calculation
- Region

Data Retained

Relating to CLEC Experience

- Report Month
- Total Number of LSRs Received, by Interface, by CLEC
  - TAG
  - EDI
  - LENS
- Total Number of Errors by Type, by CLEC
  - Fatal Rejects
  - Auto Clarification

- CLEC Errors
- Total Number of Errors by Error Code
- Total Fallout for Manual Processing

Relating to BellSouth Performance

- Report Month
- Total Number of Errors by Type
  - BellSouth System Error

SQM Disaggregation - Analog/Benchmark

SQM Level of Disaggregation	SQM Analog/Benchmark[a]
Residence	Benchmark: 95%
Business	Benchmark: 90%
UNE - Loops	Benchmark: 85%
UNE-P	Benchmark: 90%
LNP	Benchmark: 85%

SEEM Measure

SEEM	Tier I	Tier II
Yes	X	

SEEM Disaggregation - Analog/Benchmark

SEEM Disaggregation	SEEM Analog/Benchmark
Residence	Benchmark: 95%
Business	Benchmark: 90%
UNE- Loops	Benchmark: 85%
UNE-P	Benchmark: 90%
LNP	Benchmark: 85%

[a] *Benchmarks do not apply to the "Percent Achieved Flow-Through."*

Flow-Through Error Analysis

Definition

An analysis of each error type (by error code) that was experienced by the LSRs that did not flow through or reached a status for a FOC to be issued.

Exclusions

Each Error Analysis is error code specific, therefore exclusions are not applicable.

Business Rules

The CLEC mechanized ordering process includes all LSRs, including supplements (subsequent versions) which are submitted through one of the three gateway interfaces (TAG, EDI, and LENS), that flow through and reach a status for a FOC to be issued. The CLEC mechanized ordering process does not include LSRs which are submitted manually (for example, fax and courier).

Calculation

Total for each error type

Report Structure

Provides an analysis of each error type (by error code). The report is in descending order by count of each error code and provides the following:

- Error Type (by error code)
- Count of each error type
- Percent of each error type
- Cumulative percent
- Error Description
- CLEC Caused Count of each error code
- Percent of aggregate by CLEC caused count
- Percent of CLEC caused count
- BellSouth Caused Count of each error code
- Percent of aggregate by BellSouth caused count
- Percent of BellSouth by BellSouth caused count.

Data Retained

Relating to CLEC Experience

- Report Month
- Total Number of LSRs Received
- Total Number of Errors by Type (by Error Code)
  - CLEC caused error

Relating to BellSouth Performance

- Report Month
- Total Number of Errors by Type (by Error Code)
  - BellSouth System Error

SQM Disaggregation - Analog/Benchmark

SQM Level of Disaggregation	SQM Analog/Benchmark
• Not Applicable	Not Applicable

SEEM Measure

SEEM	Tier I	Tier II
No		

SEEM Disaggregation - Analog/Benchmark

SEEM Disaggregation	SEEM Analog/Benchmark
• Not Applicable	Not Applicable

O-6: CLEC LSR Information

Definition

A list with the flow through activity of LSRs by CC, PON and Ver, issued by each CLEC during the report period.

Exclusions

- Fatal Rejects
- LSRs Submitted Manually

Business Rules

The CLEC mechanized ordering process includes all LSRs, including supplements (subsequent versions) which are submitted through one of the three gateway interfaces (TAG, EDI, and LENS), that flow through and reach a status for a FOC to be issued. The CLEC mechanized ordering process does not include LSRs which are submitted manually (for example, fax and courier).

Calculation

Not Applicable

Report Structure

Provides a list with the flow through activity of LSRs by CC, PON and Ver, issued by each CLEC during the report period with an explanation of the columns and content. This report is available on a CLEC specific basis. The report provides the following for each LSR.

- CC
- PON
- Ver
- Timestamp
- Type
- Err #
- Note or Error Description

Data Retained

Relating to CLEC Experience

- Report Month
- Record of LSRs Received by CC, PON and Ver
- Record of Timestamp, Type, Err # and Note or Error Description for Each LSR by CC, PON and Ver

Relating to BellSouth Performance

- Not Applicable

SQM Disaggregation - Analog/Benchmark

SQM Level of Disaggregation	SQM Analog/Benchmark
• Not Applicable	Not Applicable

SEEM Measure

SEEM	Tier I	Tier II
No		

SEEM Disaggregation - Analog/Benchmark

SEEM Disaggregation	SEEM Analog/Benchmark
• Not Applicable	Not Applicable

O-7: Percent Rejected Service Requests

Definition

Percent Rejected Service Request is the percent of total Service Requests [(Local Service Requests (LSRs) or Access Service Requests (ASRs)] received which are rejected due to error or omission. Service Requests are considered valid when they are submitted by the CLEC and pass edit checks to insure the data received is correctly formatted and complete.

Exclusions

- Service Requests canceled by the CLEC prior to being rejected/clarified.
- Fatal Rejects
- Order Activities of BellSouth or the CLEC associated with internal or administrative use of local services (Record Orders, Test Orders, etc.) where identifiable
- LSRs identified as "Projects"

Business Rules

Fully Mechanized: An LSR/Service Request is considered "rejected" when it is submitted electronically but does not pass edit checks in the ordering systems (EDI, LENS, TAG, LESOG, LNP Gateway, LAUTO) and is returned to the CLEC without manual intervention. There are two types of "Rejects" in the Mechanized category:

A **Fatal Reject** occurs when a CLEC attempts to electronically submit an LSR but required fields are either not populated or incorrectly populated and the request is returned to the CLEC before it is considered a valid LSR.

Fatal rejects are reported in a separate column, and for informational purposes ONLY. They are not considered in the calculation of the percent of total LSRs rejected or the total number of rejected LSRs.

An **Auto Clarification** occurs when a valid LSR is electronically submitted but rejected from LESOG or LAUTO because it does not pass further edit checks for order accuracy.

Partially Mechanized: A valid LSR, which is electronically submitted (via EDI, LENS, TAG) but cannot be processed electronically and "falls out" for manual handling. It is then put into "clarification" and sent back (rejected) to the CLEC.

Non-Mechanized: LSRs which are faxed or mailed to the LCSC for processing and "clarified" (rejected) back to the CLEC by the BellSouth service representative.

Interconnection Trunks: Interconnection Trunks are ordered on Access Service Requests (ASRs). ASRs are submitted to and processed by the Local Interconnection Service Center (LISC). Trunk data is reported as a separate category.

Calculation

Percent Rejected Service Requests = (a / b) X 100

- a = Total Number of Service Requests Rejected in the reporting period
- b = Total Number of Service Requests Received in the reporting period

Report Structure

- Fully Mechanized, Partially Mechanized, Non-Mechanized
- Trunks
- CLEC Specific
- CLEC Aggregate
- Geographic Scope
  - State

- Region
- Product Specific percent Rejected
- Total percent Rejected

Data Retained

Relating to CLEC Experience

- Report Month
- Total Number of LSRs
- Total Number of Rejects
- State and Region
- Total Number of ASRs (Trunks)

Relating to BellSouth Performance

- Not Applicable

SQM Disaggregation - Analog/Benchmark

SQM Level of Disaggregation	SQM Analog/Benchmark
Mechanized, Partially Mechanized and Non-Mechanized	
Resale – Residence	Diagnostic
Resale - Business	
Resale – Design (Special)	
Resale PBX	
Resale Centrex	
Resale ISDN	
LNP (Standalone)	
INP (Standalone)	
2W Analog Loop Design	
2W Analog Loop Non-Design	
2W Analog Loop with INP Design	
2W Analog Loop with INP Non-Design	
2W Analog Loop with LNP Design	
2W Analog Loop with LNP Non-Design	
UNE Digital Loop < DS1	
UNE Digital Loop >= DS1	
UNE Loop + Port Combinations	
UNE Combination Other	
UNE ISDN Loop	
UNE Other Design	
UNE Other Non-Design	
UNE Line Splitting	
EELs	
Switch Ports	
UNE xDSL (ADSL, HDSL, UCL)	
Line Sharing	
Local Interoffice Transport	
Local Interconnection Trunks	

SEEM Measure

SEEM	Tier I	Tier II
No		

SEEM Disaggregation - Analog/Benchmark

SEEM Disaggregation	SEEM Analog/Benchmark
• Not Applicable	Not Applicable

O-8: Reject Interval

Definition

Reject Interval is the average reject time from receipt of Service Requests [(Local Service Requests (LSRs) or Access Service Requests (ASRs)] to the distribution of a Reject. Service Requests are considered valid when they are submitted by the CLEC and pass edit checks to insure the data received is correctly formatted and complete. When there are multiple rejects on a single version of an LSR, the first reject issued is used for the calculation of the interval duration.

Exclusions

- Service Requests canceled by CLEC prior to being rejected/clarified.
- Fatal Rejects
- Designated Holidays are excluded from the interval calculation for partially mechanized and non-mechanized LSRs/ASRs only.
- LSRs which are identified and classified as "Projects"

Non-business hours for Partially Mechanized and Non-Mechanized LSRs are excluded from the interval calculation. The excluded time is the time outside of normal operations which can be found at the following website: http://www.interconnection.bellsouth.com/centers/html/lcsc.html

Local Interconnection Service Center (LISC) - Monday through Friday 4:30 PM until 8:00 AM
From 4:30 PM Friday until 8:00 AM Monday

The hours excluded will be altered to reflect changes in the Center operating hours. The LCSC will accept faxed LSRs only during posted hours of operation.

The interval will be the amount of time accrued from receipt of the LSR until normal closing of the center if an LSR is worked using overtime hours.

In the case of a Partially Mechanized LSR received and worked after normal business hours, the interval will be set at one (1) minute.

Business Rules

The Reject interval is determined for each rejected LSR processed during the reporting period. The Reject interval is the elapsed time from when BellSouth receives LSR (date and time stamps in EDI or TAG) until that LSR is rejected back to the CLEC. Elapsed time for each LSR (date and time stamps in EDI or TAG) is accumulated for each reporting dimension. The accumulated time for each reporting dimension is then divided by the associated total number of rejected LSRs to produce the reject interval distribution.

Fully Mechanized: The elapsed time from receipt of a valid electronically submitted LSR (date and time stamp in EDI translator or TAG) until the LSR is rejected (date and time stamp or reject in EDI translator, or TAG). Auto Clarifications are considered in the Fully Mechanized category.

Partially Mechanized: The elapsed time from receipt of a valid electronically submitted LSR (date and time stamp in EDI translator or TAG) until it falls out for manual handling. The stop time on partially mechanized LSRs is when the LCSC Service Representative clarifies the LSR back to the CLEC via EDI translator, or TAG.

Non-Mechanized: The elapsed time from receipt of a valid LSR (date and time stamp of FAX or date and time mailed LSR is received in the LCSC) until notice of the reject (clarification) is returned to the CLEC via LON.

Interconnection Trunks: Interconnection Trunks are ordered on Access Service Requests (ASRs). ASRs are submitted to and processed by the Local Interconnection Service Center (LISC). Trunk data is reported as a separate category.

Calculation

Reject Interval = (a - b)

- a = Date and Time of Service Request Rejection
- b = Date and Time of Service Request Receipt

Average Reject Interval = (c / d)

- c = Sum of all Reject Intervals
- d = Number of Service Requests Rejected in Reporting Period

Reject Interval Distribution = (e / f) X 100

- e = Service Requests Rejected in reported interval
- f = Total Number of Service Requests Rejected in Reporting Period

Report Structure

- Fully Mechanized, Partially Mechanized, Non-Mechanized
- CLEC Specific
- CLEC Aggregate
- Geographic Scope
  - State
  - Region
- Fully Mechanized:
  0 - <= 4 minutes
  > 4 - <= 8 minutes
  >8 - <= 12 minutes
  > 12 - <= 60 minutes
  0 - <= 1 hour
  > 1 - <= 4 hours
  > 4 - <= 8 hours
  > 8 - <= 12 hours
  > 12 - <= 16 hours
  > 16 - <= 20 hours
  > 20 - <= 24 hours
  > 24 hours
- Partially Mechanized:
  0 - <= 1 hour
  > 1 - <= 4 hours
  > 4 - <= 8 hours
  > 8 - <= 10 hours
  0 - <= 10 hours
  > 10 - <= 18 hours
  0 - <= 18 hours
  > 18 - <= 24 hours
  > 24 hours
- Non-mechanized:
  0 - <= 1 hour
  > 1 - <= 4 hours
  > 4 - <= 8 hours
  > 8 - <= 12 hours
  > 12 - <= 16 hours
  > 16 - <= 20 hours
  > 20 - <= 24 hours
  0 - <= 24 hours
  > 24 hours
- Trunks:

0 - <= 36 hours
> 36 hours
- Average Interval is reported in business hours.

Data Retained

Relating to CLEC Experience

- Report Month
- Reject Interval
- Total Number of LSRs
- Total Number of Rejects
- State and Region
- Total Number of ASRs (Trunks)

Relating to BellSouth Performance

- Not Applicable

SQM Disaggregation - Analog/Benchmark

SQM Level of Disaggregation	SQM Analog/Benchmark
Resale – Residence	Fully Mechanized: 97% <= 1 Hour
Resale – Business	Partially Mechanized: 95% <= 10 Hours
Resale – Design (Special)	Non Mechanized: 95% <= 24 Hours
Resale PBX	
Resale Centrex	
Resale ISDN	
LNP (Standalone)	
INP (Standalone)	
2W Analog Loop Design	
2W Analog Loop Non-Design	
2W Analog Loop with INP Design	
2W Analog Loop with INP Non-Design	
2W Analog Loop with LNP Design	
2W Analog Loop with LNP Non-Design	
UNE Digital Loop < DS1	
UNE Digital Loop >= DS1	
UNE Loop + Port Combinations	
UNE Combination Other	
UNE ISDN Loop	
UNE Other Design	
UNE Other Non-Design	
UNE Line Splitting	
EELs	
Switch Ports	
UNE xDSL (ADSL, HDSL, UCL)	
Line Sharing	
Local Interoffice Transport	
Local Interconnection Trunks	Trunks: 95% <= 36 Hours

SEEM Measure

SEEM	Tier I	Tier II
Yes	X	X

SEEM Disaggregation - Analog/Benchmark

SEEM Disaggregation	SEEM Analog/Benchmark
• Fully Mechanized	97% <= 1 hour
• Partially Mechanized	95% <= 10 hours
• Non-Mechanized	95% <= 24 hours
• Local Interconnection Trunks	95% <= 36 hours

O-9: Firm Order Confirmation Timeliness

Definition

Interval for Return of a Firm Order Confirmation (FOC Interval) is the average response time from receipt of valid LSR or ASR to distribution of a Firm Order Confirmation. The interval will include an electronic facilities check.

Exclusions

- Service Requests canceled by CLEC prior to being confirmed.
- Designated Holidays are excluded from the interval calculation for partially mechanized and non-mechanized LSRs/ASRs only.
- LSRs which are identified and classified as "Projects"

  Non-business hours for Partially Mechanized and Non-Mechanized LSRs are excluded from the interval calculation. The excluded time is the time outside of normal operations which can be found at the following website: http://www.interconnection.bellsouth.com/centers/html/lcsc.html

  For ASRs processed in the Local Interconnection Service Center (LISC) - From 4:30 PM All hours outside of Monday – Friday 8:00 AM – 4:30 PM CST, should be excluded.

  The hours excluded will be altered to reflect changes in the Center operating hours. The Centers will accept faxed LSRs only during posted hours of operation.

  The interval will be the amount of time accrued from receipt of the LSR until normal closing of the center if an LSR is worked using overtime hours.

  In the case of a Partially Mechanized LSR received and worked after normal business hours, the interval will be set at one (1) minute.

Business Rules

Fully Mechanized: The elapsed time from receipt of a valid electronically submitted LSR (date and time stamp in EDI or TAG) until the LSR is processed, appropriate service orders are generated and a Firm Order Confirmation is returned to the CLEC via EDI translator or TAG.

Partially Mechanized: The elapsed time from receipt of a valid electronically submitted LSR (date and time stamp in EDI, or TAG) which falls out for manual handling until appropriate service orders are issued by a BellSouth service representative via Direct Order Entry (DOE) or Service Order Negotiation Generation System (SONGS) to SOCS and a Firm Order Confirmation is returned to the CLEC via EDI translator, or TAG.

Non-Mechanized: The elapsed time from receipt of a valid paper LSR (date and time stamp of FAX or date and time paper LSRs received in LCSC) until appropriate service orders are issued by a BellSouth service representative via Direct Order Entry (DOE) or Service Order Negotiation Generation System (SONGS) to SOCS and a Firm Order Confirmation is sent to the CLEC via LON.

Interconnection Trunks: Interconnection Trunks are ordered on Access Service Requests (ASRs). ASRs are submitted to and processed by the Local Interconnection Service Center (LISC). The elapsed time is measured from receipt of a valid ASR (date and time stamp of a FAX or paper ASR received in the LISC) until the appropriate orders are issued by a BellSouth representative and a FOC issued in EXACT. Trunk data is reported as a separate category.

Note: When multiple FOCs occur on a single version of an LSR, the first FOC is used to measure the interval.

Calculation

Firm Order Confirmation Interval = (a - b)

- a = Date and Time of Firm Order Confirmation
- b = Date and Time of Service Request Receipt

Average FOC Interval = (c / d)

- c = Sum of all Firm Order Confirmation Times
- d = Number of Service Requests Confirmed in Reporting Period

FOC Interval Distribution = (e / f) X 100

- e = Service Requests Confirmed in Designated Interval
- f = Total Service Requests Confirmed in the Reporting Period

Report Structure

- Fully Mechanized, Partially Mechanized, Non-Mechanized
  - CLEC Specific
  - CLEC Aggregate
- Geographic Scope
  - State
  - Region
- Fully Mechanized:
  0 - <= 15 minutes
  > 15 - <= 30 minutes
  > 30 - <= 45 minutes
  > 45 - <= 60 minutes
  > 60 - <= 90 minutes
  > 90 - <= 120 minutes
  > 120 - <= 180 minutes
  0 - <= 3 hours
  > 3 - <= 6 hours
  > 6 - <= 12 hours
  > 12 - <= 24 hours
  > 24 - <= 48 hours
  > 48 hours
- Partially Mechanized:
  0 - <= 4 hours
  > 4 - <= 8 hours
  > 8 - <= 10 hours
  0 - <= 10 hours
  > 10 - <= 18 hours
  0 - <= 18 hours
  > 18 - <= 24 hours
  > 24 - <= 48 hours
  > 48 hours
- Non-mechanized:
  0 - <= 4 hours
  > 4 - <= 8 hours
  > 8 - <= 12 hours
  > 12 - <= 16 hours
  0 - <= 24 hours
  > 16 - <= 20 hours
  > 20 - <= 24 hours
  > 24 - <= 36 hours
  0 - <= 36 hours

> 36 - <= 48 hours
> 48 hours

- Trunks:
  0 - <= 48 hours
  > 48 hours
- Average Interval is reported in business hours

Data Retained

Relating to CLEC Experience

- Report Month
- Interval for FOC
- Total Number of LSRs
- State and Region
- Total Number of ASRs (Trunks)

Relating to BellSouth Performance

- Not Applicable

SQM Disaggregation - Analog/Benchmark

SQM Level of Disaggregation	SQM Analog/Benchmark
Resale – Residence	Fully Mechanized: 95% <= 3 Hours
Resale – Business	Partially Mechanized: 95% <= 10 Hours
Resale – Design (Special)	Non-Mechanized: 95% <= 24 Hours
Resale PBX	
Resale Centrex	
Resale ISDN	
LNP (Standalone)	
INP (Standalone)	
2W Analog Loop Design	
2W Analog Loop Non-Design	
2W Analog Loop with INP Design	
2W Analog Loop with INP Non-Design	
2W Analog Loop with LNP Design	
2W Analog Loop with LNP Non-Design	
UNE Digital Loop < DS1	
UNE Digital Loop >= DS1	
UNE Loop + Port Combinations	
UNE Combination Other	
UNE ISDN Loop	
UNE Other Design	
UNE Other Non-Design	
UNE Line Splitting	
EELs	
Switch Ports	
UNE xDSL (ADSL, HDSL, UCL)	
Line Sharing	
Local Interoffice Transport	
Local Interconnection Trunks	Trunks: 95% <= 48 Hours

SEEM Measure

SEEM	Tier I	Tier II
Yes	X	X

SEEM Disaggregation - Analog/Benchmark

SEEM Disaggregation	SEEM Analog/Benchmark
• Fully Mechanized	95% <= 3 Hours
• Partially Mechanized	95% <= 10 Hours
• Non-Mechanized	95% <= 24 Hours
• Local Interconnection Trunks	95% <= 48 Hours

O-10: Service Inquiry with LSR Firm Order Confirmation (FOC) Response Time Manual[1]

Definition

This report measures the interval and the percent within the interval from the submission of a Service Inquiry (SI) with Firm Order LSR to the distribution of a Firm Order Confirmation (FOC).

Exclusions

- Designated Holidays are excluded from the interval calculation.
- Weekend hours from 5:00 PM Friday until 8:00AM Monday are excluded from the interval calculation of the Service Inquiry.
- Canceled Requests
- Electronically Submitted Requests
- Non-business hours for Partially Mechanized and Non-Mechanized LSRs are excluded from the interval calculation. The excluded time is the time outside of normal operations which can be found at the following website: http//www.interconnection.bellsouth.com/centers/html/lcsc.html

Business Rules

This measurement combines four intervals:

1. From receipt of a valid Service Inquiry with LSR to hand off to the Service Advocacy Center (SAC) for Loop 'Look-up'.
2. From SAC start date to SAC complete date.
3. From SAC complete date to the Complex Resale Support Group (CRSG) complete date with hand off to LCSC.
4. From receipt of a valid SI/LSR in the LCSC to Firm Order Confirmation.

(A valid Service Inquiry is an inquiry that has all required fields populated correctly and has not been returned for clarification.)

Calculation

FOC Timeliness Interval with SI = (a - b)

- a = Date and Time Firm Order Confirmation (FOC) for SI with LSR returned to CLEC
- b = Date and Time SI with LSR received

Average Interval = (c / d)

- c = Sum of all FOC Timeliness Intervals with SI
- d = Total number of SIs with LSRs received in the reporting period

Percent Within Interval = (e / f) X 100

- e = Total number of Service Inquiries with LSRs received by the CRSG to distribution of FOC by the Local Carrier Service Center (LCSC)
- f = Total number of Service Inquiries with LSRs received in the reporting period

Report Structure

- CLEC Aggregate
- CLEC Specific
- Geographic Scope
  - State
  - Region

[1] *See O-9 for FOC Timeliness*

- Intervals
  0 – <= 3 days
  > 3 – <= 5 days
  0 – <=5 days
  > 5 – <= 7 days
  > 7 – <= 10 days
  > 10 – <= 15 days
  >15 days
- Average Interval measured in days

Data Retained

Relating to CLEC Experience

- Report Month
- Total Number of Requests
- SI Intervals
- State and Region

Relating to BellSouth Performance

- Not Applicable

SQM Disaggregation - Analog/Benchmark

SQM Level of Disaggregation	SQM Analog/Benchmark
• xDSL (includes UNE unbundled ADSL, HDSL and UNE Unbundled Copper Loops)	95% Returned <= 5 Business Days
• Unbundled Interoffice Transport	

SEEM Measure

SEEM	Tier I	Tier II
No		

SEEM Disaggregation - Analog/Benchmark

SEEM Disaggregation	SEEM Analog/Benchmark
• Not Applicable	Not Applicable

O-11: Firm Order Confirmation and Reject Response Completeness

Definition

A response is expected from BellSouth for every Local Service Request transaction (version). Firm Order Confirmation and Reject Response Completeness is the corresponding number of Local Service Requests received to the combination of Firm Order Confirmation and Reject Responses.

Exclusions

- Service Requests canceled by the CLEC prior to FOC or Rejected/Clarified
- Fatal Rejects
- LSRs identified as "Projects"

Business Rules

Mechanized – The number of FOCs or Auto Clarifications sent to the CLEC from EDI, or TAG in response to electronically submitted LSRs.

Partially Mechanized – The number of FOCs or Rejects sent to the CLEC from EDI, or TAG in response to electronically submitted LSRs which fall out for manual handling by the LCSC personnel.

Non-Mechanized: The number of FOCs or Rejects sent to the CLECs by FAX server.

Interconnection Trunks: Interconnection Trunks are ordered on Access Service Requests (ASRs). ASRs are submitted to and processed by the Local Interconnection Service Center (LISC). Trunk data is reported as a separate category.

For CLEC Results:

Percent responses is determined by computing the number of Firm Order Confirmations and Rejects transmitted by BellSouth and dividing by the number of Local Service Requests (all versions) received in the reporting period.

Calculation

Firm Order Confirmation / Reject Response Completeness = (a / b) X 100

- a = Total Number of Service Requests for which a Firm Order Confirmation or Reject is Sent
- b = Total Number of Service Requests Received in the Report Period

Report Structure

Fully Mechanized, Partially Mechanized, Non-Mechanized and Interconnection Trunks

- State and Region
- CLEC Specific
- CLEC Aggregate

Data Retained

Relating to CLEC Experience

- Report Month
- Total Number of LSRs
- Total Number of rejects

- Total Number of ASRs (Trunks)
- Total Number of FOCs

Relating to BellSouth Performance

- Not Applicable

SQM Disaggregation - Analog/Benchmark

SQM Level of Disaggregation	SQM Analog/Benchmark
Resale Residence	95% Returned
Resale Business	
Resale Design (Special)	
Resale PBX	
Resale Centrex	
Resale ISDN	
LNP (Standalone)	
INP (Standalone)	
2W Analog Loop Design	
2W Analog Loop Non-Design	
2W Analog Loop with INP Design	
2W Analog Loop with INP Non-Design	
2W Analog Loop with LNP Design	
2W Analog Loop with LNP Non-Design	
UNE Digital Loop < DS1	
UNE Digital Loop >= DS1	
UNE Loop + Port Combinations	
UNE Combination Other	
UNE ISDN Loop	
UNE Other Design	
UNE Other Non-Design	
UNE Line Splitting	
EELs	
Switch Ports	
UNE xDSL (ADSL, HDSL, UCL)	
Line Sharing	
Local Interoffice Transport	
Local Interconnection Trunks	

SEEM Measure

SEEM	Tier I	Tier II
Yes	X	X

SEEM Disaggregation - Analog/Benchmark

SEEM Disaggregation	SEEM Analog/Benchmark
Fully Mechanized	95% Returned
Partially Mechanized	
Non-Mechanized	
Local Interconnection Trunks	

O-12: Speed of Answer in Ordering Center

Definition

Measures the average time a customer is in queue.

Exclusions

None

Business Rules

The clock starts when the appropriate option is selected (i.e., 1 for Resale Consumer, 2 for Resale Multiline, and 3 for UNE-LNP, etc.) and the call enters the queue for that particular group in the LCSC. The clock stops when a BellSouth service representative in the LCSC answers the call. The speed of answer is determined by measuring and accumulating the elapsed time from the entry of a CLEC call into the BellSouth automatic call distributor (ACD) until a service representative in BellSouth's Local Carrier Service Center (LCSC) answers the CLEC call.

Calculation

Speed of Answer in Ordering Center = (a / b)

- a = Total seconds in queue
- b = Total number of calls answered in the Reporting Period

Report Structure

Aggregate

- CLEC – Local Carrier Service Center
- BellSouth
  - Business Service Center
- Geographic Scope
  - Region

Data Retained

Relating to CLEC Experience

- Mechanized Tracking Through LCSC Automatic Call Distributor

Relating to BellSouth Performance

- Mechanized Tracking Through BellSouth Retail Center Support System

SQM Disaggregation - Analog/Benchmark

SQM Level of Disaggregation	SQM Analog/Benchmark
Aggregate	
• CLEC – Local Carrier Service Center	Parity with Retail (Business Service Center)

SEEM Measure

SEEM	Tier I	Tier II
Yes		X

SEEM Disaggregation - Analog/Benchmark

SEEM Disaggregation	SEEM Analog/Benchmark
• CLEC - Local Carrier Service Center	Parity with Retail (Business Service Center)

Section 3: Provisioning

P-1: Mean Held Order Interval & Distribution Intervals

Definition

When delays occur in completing CLEC orders, the average period that CLEC orders are held for BellSouth reasons, pending a delayed completion, should be no worse for the CLEC when compared to BellSouth delayed orders. Calculation of the interval is the total days orders are held and pending but not completed that have passed the currently committed due date; divided by the total number of held orders. This report is based on orders still pending, held and past their committed due date. The distribution interval is based on the number of orders held and pending but not completed over 15 and 90 days. (Orders reported in the >90 day interval are also included in the >15 day interval.)

Exclusions

- Order Activities of BellSouth or the CLEC associated with internal or administrative use of local services (Record Orders, Listing Orders, Test Orders, etc.) Test order types may be C, N, R, or T
- Disconnect (D) & From (F) orders
- Orders with Appointment Code of 'A', i.e., orders for locations requiring special construction including locations where no address exists and a technician must make a field visit to determine how to get facilities to the location.

Business Rules

Mean Held Order Interval: This metric is computed at the close of each report period. The held order interval is established by first identifying all orders, at the close of the reporting interval, that both have not been reported as completed in SOCS and have passed the currently committed due date for the order and identifying all orders that have been reported as completed in SOCS after the currently committed due date for the order. For each such order, the number of calendar days between the earliest committed due date on which BellSouth had a company missed appointment and the close of the reporting period is established and represents the held order interval for that particular order. The held order interval is accumulated by the standard groupings, unless otherwise noted, and the reason for the order being held. The total number of days accumulated in a category is then divided by the number of held orders within the same category to produce the mean held order interval. The interval is by calendar days with no exclusions for Holidays or Sundays.

CLEC Specific reporting is by type of held order (facilities, equipment, other), total number of orders held, and the total and average days.

Held Order Distribution Interval: This measure provides data to report total days held and identifies these in categories of >15 days and > 90 days. (Orders counted in >90 days are also included in > 15 days).

Calculation

Mean Held Order Interval = a / b

- a = Sum of held-over-days for all Past Due Orders Held with a BellSouth Missed Appointment from the earliest BellSouth missed appointment
- b = Number of Past Due Orders Held and Pending But Not Completed and past the committed due date

Held Order Distribution Interval (for each interval) = (c / d) X 100

- c = # of Orders Held for >= 15 days or # of Orders Held for >= 90 days
- d = Total # of Past Due Orders Held and Pending But Not Completed)

Report Structure

- CLEC Specific
- CLEC Aggregate
- BellSouth Aggregate
- Circuit Breakout < 10, >= 10 (except trunks)
- Dispatch/Non-Dispatch
- Geographic Scope
  - State
  - Region

Data Retained

Relating to CLEC Experience

- Report Month
- CLEC Order Number and PON (PON)
- Order Submission Date (TICKET_ID)
- Committed Due Date (DD)
- Service Type (CLASS_SVC_DESC)
- Hold Reason
- Total Line/Circuit Count
- Geographic Scope

Note: Code in parentheses is the corresponding header found in the raw data file.

Relating to BellSouth Performance

- Report Month
- BellSouth Order Number
- Order Submission Date
- Committed Due Date
- Service Type
- Hold Reason
- Total Line/Circuit Count
- Geographic Scope

SQM Disaggregation - Analog/Benchmark

SQM Level of Disaggregation	SQM Analog/Benchmark
Resale Residence	Retail Residence
Resale Business	Retail Business
Resale Design	Retail Design
Resale PBX	Retail PBX
Resale Centrex	Retail Centrex
Resale ISDN	Retail ISDN
LNP (Standalone)	Retail Residence and Business (POTS)
INP (Standalone)	Retail Residence and Business (POTS)
2W Analog Loop Design	Retail Residence and Business Dispatch
2W Analog Loop Non-Design	Retail Residence and Business – (POTS Excluding Switch-Based Orders)
2W Analog Loop with LNP - Design	Retail Residence and Business Dispatch
2W Analog Loop with LNP- Non-Design	Retail Residence and Business – (POTS Excluding Switch-Based Orders)
2W Analog Loop with INP-Design	Retail Residence and Business Dispatch
2W Analog Loop with INP-Non-Design	Retail Residence and Business – (POTS Excluding Switch-Based Orders)

- UNE Digital Loop < DS1 ..... Retail Digital Loop < DS1
- UNE Digital Loop >= DS1 ..... Retail Digital Loop >= DS1
- UNE Loop + Port Combinations ..... Retail Residence and Business
  - Dispatch In ..... - Dispatch
  - Switch Based ..... - Switched Based
- UNE Switch Ports ..... Retail Residence and Business (POTS)
- UNE Combo Other ..... Retail Residence, Business and Design Dispatch
- UNE xDSL (HDSL, ADSL and UCL) ..... ADSL Provided to Retail
- UNE ISDN (Includes UDC) ..... Retail ISDN - BRI
- UNE Line Sharing ..... ADSL Provided to Retail
- UNE Other Design ..... Retail Design
- UNE Other Non-Design ..... Retail Residence and Business
- Local Transport (Unbundled Interoffice Transport) ..... Retail DS1/DS3 Interoffice
- Local Interconnection Trunks ..... Parity with Retail
- UNE Line Splitting ..... ADSL to Retail
- EELs ..... Retail DS1/DS3

SEEM Measure

SEEM	Tier I	Tier II
No		

SEEM Disaggregation - Analog/Benchmark

SEEM Disaggregation	SEEM Analog/Benchmark
• Not Applicable	Not Applicable

P-2: Average Jeopardy Notice Interval & Percentage of Orders Given Jeopardy Notices

(Deleted)

P-2A: Jeopardy Notice Interval

Definition

When BellSouth can determine in advance that a committed due date is in jeopardy for facility delay, it will provide advance notice to the CLEC.

The interval is from the date/time the notice is released to the CLEC/BellSouth systems until 5pm on the due date of the order.

Exclusions

- Orders held for CLEC end user reasons
- Disconnect (D) and From (F) orders
- Orders with Jeopardy Notice when jeopardy is identified on the due date. This exclusion only applies when the technician on premises has attempted to provide service but must refer to Engineer or Cable Repair for facility jeopardy.
- Orders issued with a due date of < = 48 hours.

Business Rules

When BellSouth can determine in advance that a committed due date is in jeopardy for facility delay, it will provide advance notice to the CLEC. The number of committed orders in a report period is the number of orders that have a due date in the reporting period. Jeopardy notices for interconnection trunk results are usually zero as these trunks seldom experience facility delays. The Committed Due Date is considered the Confirmed Due Date. This report measures dispatched orders only. If an order is originally sent as non-dispatch and it is determined there is a facility delay, the order is converted to a dispatch code so the facility problem can be corrected. It will remain coded dispatched until completion.

Calculation

Jeopardy Interval = a - b

- a = Date and Time of Scheduled Due Date on Service Order
- b = Date and Time of Jeopardy Notice

Average Jeopardy Interval = c / d

- c = Sum of all Jeopardy Intervals
- d = Number of Orders Notified of Jeopardy in Reporting Period

Report Structure

- CLEC Specific
- CLEC Aggregate
- BellSouth Aggregate
- Mechanized Orders
- Non-Mechanized Orders
- Dispatch/Non-Dispatch
- Geographic Scope
  - State
  - Region

Data Retained

Relating to CLEC Experience

- Report Month
- CLEC Order Number and PON

- Date and Time Jeopardy Notice Sent
- Committed Due Date
- Service Type

Relating to BellSouth Performance

- Report Month
- BellSouth Order Number
- Date and Time Jeopardy Notice Sent
- Committed Due Date
- Service Type

SQM Disaggregation - Analog/Benchmark

SQM Level of Disaggregation	SQM Analog/Benchmark
• Resale Residence	95% > = 48 hours
• Resale Business	95% > = 48 hours
• Resale Design	95% > = 48 hours
• Resale PBX	95% > = 48 hours
• Resale Centrex	95% > = 48 hours
• Resale ISDN	95% > = 48 hours
• LNP (Standalone)	95% > = 48 hours
• INP (Standalone)	95% > = 48 hours
• 2W Analog Loop Design	95% > = 48 hours
• 2W Analog Loop Non-Design	95% > = 48 hours
• 2W Analog Loop with LNP - Design	95% > = 48 hours
• 2W Analog Loop with LNP- Non-Design	95% > = 48 hours
• 2W Analog Loop with INP-Design	95% > = 48 hours
• 2W Analog Loop with INP-Non-Design	95% > = 48 hours
• UNE Digital Loop < DS1	95% > = 48 hours
• UNE Digital Loop >= DS1	95% > = 48 hours
• UNE Loop + Port Combinations	95% > = 48 hours
- Dispatch In	- Dispatch In
- Switch Based	- Switch Based
• UNE Switch Ports	95% > = 48 hours
• UNE Combo Other	95% > = 48 hours
• UNE xDSL (HDSL, ADSL and UCL)	95% > = 48 hours
• UNE ISDN (Includes UDC)	95% > = 48 hours
• UNE Line Sharing	95% > = 48 hours
• UNE Other Design	95% > = 48 hours
• UNE Other Non-Design	95% > = 48 hours
• Local Transport (Unbundled Interoffice Transport)	95% > = 48 hours
• Local Interconnection Trunks	95% > = 48 hours
• UNE Line Splitting	95% > = 48 hours
• EELs	95% > = 48 hours

SEEM Measure

SEEM	Tier I	Tier II
No		

SEEM Disaggregation	SEEM Analog/Benchmark
• Not Applicable	Not Applicable

P-2B: Percentage of Orders Given Jeopardy Notices

Definition

When BellSouth can determine in advance that a committed due date is in jeopardy for facility delay, it will provide advance notice to the CLEC.

The Percent of Orders is the percentage of orders given jeopardy notices for facility delay in the count of orders confirmed in the report period.

Exclusions

- Orders held for CLEC end user reasons
- Disconnect (D) and From (F) orders

Business Rules

When BellSouth can determine in advance that a committed due date is in jeopardy for facility delay, it will provide advance notice to the CLEC. The number of committed orders in a report period is the number of orders that have a due date in the reporting period. Jeopardy notices for interconnection trunks results are usually zero as these trunks seldom experience facility delays. The Committed due date is considered the Confirmed due date. This report measures dispatched orders only. If an order is originally sent as non-dispatch and it is determined there is a facility delay, the order is converted to a dispatch code so the facility problem can be corrected. It will remain coded dispatched until completion.

Calculation

Percent of Orders Given Jeopardy Notice = (a / b) X 100

- a = Number of Orders Given Jeopardy Notices in Reporting Period
- b = Number of Orders Confirmed (due) in Reporting Period

Percent of Orders Given Jeopardy Notice > = 48 hours = (c / d) X 100

- c = Number of Orders Given Jeopardy Notice >= 48 hours in Reporting Period (electronic only)
- d = Number of Orders Given Jeopardy Notices in Reporting Period (electronic only)

Report Structure

- CLEC Specific
- CLEC Aggregate
- BellSouth Aggregate
- Mechanized Orders
- Non-Mechanized Orders
- Dispatch/Non-Dispatch
- Geograhic Scope
  - State
  - Region

Data Retained

Relating to CLEC Experience

- Report Month
- CLEC Order Number and PON

- Date and Time Jeopardy Notice sent
- Committed Due Date
- Service Type

Relating to BellSouth Performance

- Report Month
- BellSouth Order Number
- Date and Time Jeopardy Notice sent
- Committed Due Date
- Service Type

SQM Disaggregation - Analog/Benchmark

SQM Level of Disaggregation	SQM Analog/Benchmark
• Resale Residence	Retail Residence
• Resale Business	Retail Business
• Resale Design	Retail Design
• Resale PBX	Retail PBX
• Resale Centrex	Retail Centrex
• Resale ISDN	Retail ISDN
• LNP (Standalone)	Retail Residence and Business (POTS)
• INP (Standalone)	Retail Residence and Business (POTS)
• 2W Analog Loop Design	Retail Residence and Business Dispatch
• 2W Analog Loop Non-Design	Retail Residence and Business – (POTS Excluding Switch-Based Orders)
• 2W Analog Loop with LNP - Design	Retail Residence and Business Dispatch
• 2W Analog Loop with LNP - Non-Design	Retail Residence and Business – (POTS Excluding Switch-Based Orders)
• 2W Analog Loop with INP-Design	Retail Residence and Business Dispatch
• 2W Analog Loop with INP-Non-Design	Retail Residence and Business – (POTS Excluding Switch-Based Orders)
• UNE Digital Loop <DS1	Retail Digital Loop <DS1
• UNE Digital Loop >=DS1	Retail Digital Loop >=DS1
• UNE Loop + Port Combinations	Retail Residence and Business
- Dispatch In	- Dispatch In
- Switch Based	- Switch Based
• UNE Switch Ports	Retail Residence and Business (POTS)
• UNE Combo Other	Retail Residence, Business and Design Dispatch
• UNE xDSL (HDSL, ADSL and UCL)	ADSL Provided to Retail
• UNE ISDN (Includes UDC)	Retail ISDN - BRI
• UNE Line Sharing	ADSL Provided to Retail
• UNE Other Design	Retail Design
• UNE Other Non-Design	Retail Residence and Business
• Local Transport (Unbundled Interoffice Transport)	Retail DS1/DS3 Interoffice
• Local Interconnection Trunks	Parity with Retail
• UNE Line Splitting	ADSL Provided to Retail
• EELs	Retail DS1/DS3

SEEM Measure

SEEM	Tier I	Tier II
No		

SEEM Disaggregation **SEEM Analog/Benchmark**

- Not Applicable..... Not Applicable

P-3: Percent Missed Initial Installation Appointments

Definition

"Percent missed initial installation appointments" monitors the reliability of BellSouth commitments with respect to committed due dates to assure that the CLEC can reliably quote expected due dates to their retail customer as compared to BellSouth. This measure is the percentage of total orders processed for which BellSouth is unable to complete the service orders on the committed due dates and reported for Total misses and End User Misses.

Exclusions

- Orders canceled prior to the due date including orders that are to be provisioned on the same day they are placed. ("Zero Due Date Orders")
- Order Activities of BellSouth or the CLEC associated with internal or administrative use of local services (Record Orders, Listing Orders Test Orders, etc., Order types may be coded C, N, R or T)
- Disconnect (D) & From (F) orders
- End User Misses

Business Rules

Percent Missed Initial Installation Appointments (PMI) is the percentage of orders with completion dates in the reporting period that are past the original committed due date. Missed Appointments caused by end-user reasons will be excluded and reported separately. The first commitment date on the service order that is a missed appointment is the missed appointment code used for calculation whether it is a BellSouth missed appointment or an End User missed appointment. The "due date" is any time on the confirmed due date. Which means there cannot be a cutoff time for commitments, as certain types of orders are requested to be worked after standard business hours. Also, during Daylight Savings Time, field technicians are scheduled until 9PM in some areas and the customer is offered a greater range of intervals from which to select.

Calculation

Percent Missed Installation Appointments = (a / b) X 100

- a = Number of Orders with Completion date in Reporting Period past the Original Committed Due Date
- b = Number of Orders Completed in Reporting Period

Report Structure

- CLEC Specific
- CLEC Aggregate
- BellSouth Aggregate
- Report in Categories of <10 lines/circuits >= 10 lines/circuits (except trunks)
- Dispatch/Non-Dispatch (except Trunks)
- Geographic Scope
  - State
  - Region

Data Retained

Relating to CLEC Experience

- Report Month
- CLEC Order Number and PON (PON)
- Committed Due Date (DD)

- Completion Date (CMPLTN DD)
- Status Type
- Status Notice Date
- Standard Order Activity

Note: Code in parentheses is the corresponding header found in the raw data file.

Relatng to BellSouth Performance

- Report Month
- BellSouth Order Number
- Committed Due Date (DD)
- Completion Date (CMPLTN DD)
- Status Type
- Status Notice Date
- Standard Order Activity

SQM Disaggregation - Analog/Benchmark

SQM Level of Disaggregation	SQM Analog/Benchmark
• Resale Residence	Retail Residence
• Resale Business	Retail Business
• Resale Design	Retail Design
• Resale PBX	Retail PBX
• Resale Centrex	Retail Centrex
• Resale ISDN	Retail ISDN
• LNP (Standalone)	Retail Residence and Business (POTS)
• INP (Standalone)	Retail Residence and Business (POTS)
• 2W Analog Loop Design	Retail Residence and Business Dispatch
• 2W Analog Loop Non-Design	Retail Residence and Business – (POTS Excluding Switch- Based Orders)
• 2W Analog Loop With LNP - Design	Retail Residence and Business Dispatch
• 2W Analog Loop With LNP- Non-Design	Retail Residence and Business – (POTS Excluding Switch-Based Orders)
• 2W Analog Loop With INP-Design	Retail Residence and Business Dispatch
• 2W Analog Loop With INP-Non-Design	Retail Residence and Business – (POTS Excluding Switch-Based Orders)
• UNE Digital Loop < DS1	Retail Digital Loop < DS1
• UNE Digital Loop >= DS1	Retail Digital Loop >= DS1
• UNE Loop + Port Combinations	Retail Residence and Business
- Dispatch In	- Dispatch In
- Switch Based	- Switched Based
• UNE Switch Ports	Retail Residence and Business (POTS)
• UNE Combo Other	Retail Residence, Business and Design Dispatch
• UNE xDSL (HDSL, ADSL and UCL)	ADSL Provided to Retail
- Without Conditioning	- Without Conditioning
- With Conditioning	- With Conditioning (BellSouth does not offer this service to Retail)
• UNE ISDN	Retail ISDN - BRI
• UNE Line Sharing Without Conditioning	ADSL Provided to Retail
With Conditioning	ADSL Provided to Retail
• UNE Other Design	Retail Design
• UNE Other Non-Design	Retail Residence and Business
• Local Transport (Unbundled Interoffice Transport)	Retail DS1/DS3 Interoffice
• Local Interconnection Trunks	Parity with Retail
• UNE Line Splitting Without Conditioning	ADSL Provided to Retail
• With Conditioning	ADSL Provided to Retail
• EELs	Retail DS1/DS3
• UNE UDC/IDSL	Retail ISDN - BRI

SEEM Measure

SEEM	Tier I	Tier II
Yes	X	X

SEEM Disaggregation - Analog/Benchmark

SEEM Disaggregation	SEEM Analog/Benchmark
• Resale Residence	Retail Residence
• Resale Business	Retail Business
• Resale Design	Retail Design
• Resale PBX	Retail PBX
• Resale Centrex	Retail Centrex
• Resale ISDN	Retail ISDN
• LNP (Standalone)	Retail Residence and Business (POTS)
• INP (Standalone)	Retail Residence and Business (POTS)
• 2W Analog Loop Design	Retail Residence and Business Dispatch
• 2W Analog Loop Non-Design	Retail Residence and Business – (POTS Excluding Switch-Based Orders)
• 2W Analog Loop With LNP - Design	Retail Residence and Business Dispatch
• 2W Analog Loop With LNP- Non-Design	Retail Residence and Business – (POTS Excluding Switch-Based Orders)
• 2W Analog Loop With INP-Design	Retail Residence and Business Dispatch
• 2W Analog Loop With INP-Non-Design	Retail Residence and Business – (POTS Excluding Switch-Based Orders)
• UNE Digital Loop < DS1	Retail Digital Loop < DS1
• UNE Digital Loop >= DS1	Retail Digital Loop >=DS1
• UNE Loop + Port Combinations	Retail Residence and Business
- Dispatch In	- Dispatched In
- Switch Based	- Switch Based
• UNE Switch Ports	Retail Residence and Business (POTS)
• UNE Combo Other	Retail Residence, Business and Design Dispatch
• UNE xDSL (HDSL, ADSL and UCL)	ADSL Provided to Retail
- Without Conditioning	- Without Conditioning
- With Conditioning	- With Conditioning (BellSouth does not offer this service to Retail)
• UNE ISDN	Retail ISDN - BRI
• UNE Line Sharing Without Conditioning	ADSL Provided to Retail
With Conditioning	ADSL Provided to Retail
• Local Transport (Unbundled Interoffice Transport)	Retail DS1/DS3 Interoffice
• Local Interconnection Trunks	Parity with Retail
• UNE Line Splitting Without Conditioning	ADSL Provided to Retail
• With Conditioning	ADSL Provided to Retail
• UNE Other Design	Retail Design
• UNE Other Non-Design	Retail Residence and Business
• EELs	Retail DS1/DS3
• UNE UDC/IDSL	Retail ISDN - BRI

P-3A: Percent Missed Installation Appointments Including Subsequent Appointments

(Deleted)

P-4: Average Completion Interval (OCI) & Order Completion Interval Distribution

Definition

The "average completion interval" measure monitors the interval of time it takes BellSouth to provide service for the CLEC or its own customers. The "Order Completion Interval Distribution" provides the percentages of orders completed within certain time periods. This report measures how well BellSouth meets the interval offered to customers on service orders.

Exclusions

- Canceled Service Orders
- Order Activities of BellSouth or the CLEC associated with internal or administrative use of local services (Record Orders, Listing Orders, Test Orders, etc.)
- Disconnect (D & F) orders (Except "D" orders associated with LNP Standalone)
- "L" Appointment coded orders (where the customer has requested a later than offered interval)
- End user-caused misses

Business Rules

The actual completion interval is determined for each order processed during the reporting period. The completion interval is the elapsed time from when BellSouth issues a FOC or SOCS date time stamp receipt of an order from the CLEC to BellSouth's actual order completion date. The clock starts when a valid order number is assigned by SOCS and stops when the technician or system completes the order in SOCS. Elapsed time for each order is accumulated for each reporting dimension. The accumulated time for each reporting dimension is then divided by the associated total number of orders completed. Orders that are worked on zero due dates are calculated with a .33-day interval (8 hours) in order to report a portion of a day interval. These orders are issued and worked/completed on the same day. They can be either flow through orders (no field work-non-dispatched) or field orders (dispatched).

The interval breakout for UNE and Design is: 0-5 = 0-< 5, 5-10 = 5-<10, 10-15 = 10-< 15, 15-20 = 15- < 20, 20-25 = 20-< 25, 25-30 = 25-< 30, >= 30 = 30 and greater.

Calculation

Completion Interval = (a - b)

- a = Completion Date
- b = FOC/SOCS date time-stamp (application date)

Average Completion Interval = (c / d)

- c = Sum of all Completion Intervals
- d = Count of Orders Completed in Reporting Period

Order Completion Interval Distribution (for each interval) = (e / f) X 100

- e = Service Orders Completed in "X" days
- f = Total Service Orders Completed in Reporting Period

Report Structure

- CLEC Specific
- CLEC Aggregate
- BellSouth Aggregate
- Dispatch/Non-Dispatch categories applicable to all levels except trunks
- Residence and Business reported in day intervals = 0,1,2,3,4,5,5+
- UNE and Design reported in day intervals =0-5,5-10,10-15,15-20,20-25,25-30, >= 30

- All Levels are reported <10 line/circuits; >= 10 line/circuits (except trunks)
- Geographic Scope
  - State
  - Region

Data Retained

Relating to CLEC Experience

- Report Month
- CLEC Company Name
- Order Number (PON)
- Application Date and Time
- Completion Date (CMPLTN_DT)
- Service Type (CLASS_SVC_DESC)
- Geographic Scope

Note: Code in parentheses is the corresponding header found in the raw data file.

Relating to BellSouth Performance

- Report Month
- BellSouth Order Number
- Order Submission Date and Time
- Order Completion Date and Time
- Service Type
- Geographic Scope

SQM Disaggregation - Analog/Benchmark

SQM Level of Disaggregation	SQM Analog/Benchmark
Resale Residence	Retail Residence
Resale Business	Retail Business
Resale Design	Retail Design
Resale PBX	Retail PBX
Resale Centrex	Retail Centrex
Resale ISDN	Retail ISDN
LNP (Standalone)	Retail Residence and Business (POTS)
INP (Standalone)	Retail Residence and Business (POTS)
2W Analog Loop Design	Retail Residence and Business Dispatch
2W Analog Loop Non-Design	Retail Residence and Business – (POTS Excluding Switch-Based Orders)
2W Analog Loop with LNP - Design	Retail Residence and Business Dispatch
2W Analog Loop with LNP- Non-Design	Retail Residence and Business – (POTS Excluding Switch-Based Orders)
2W Analog Loop with INP-Design	Retail Residence and Business Dispatch
2W Analog Loop with INP-Non-Design	Retail Residence and Business – (POTS Excluding Switch-Based Orders)
UNE Digital Loop < DS1	Retail Digital Loop < DS1
UNE Digital Loop >= DS1	Retail Digital Loop >= DS1
UNE Loop + Port Combinations	Retail Residence and Business
- Dispatch In	- Dispatch In
- Switch Based	- Switch Based
UNE Switch Ports	Retail Residence and Business (POTS)
UNE Combo Other	Retail Residence, Business and Design Dispatch
UNE xDSL (HDSL, ADSL and UCL)	
- Without Conditioning	- <= 5 Days
- With Conditioning	- <= 12 Days

- UNE ISDN ..... Retail ISDN - BRI
- UNE Line Sharing Without Conditioning ..... ADSL Provided to Retail
  With Conditioning ..... <= 12 Days
- Local Transport (Unbundled Interoffice Transport) ..... Retail DS1/DS3 Interoffice
- Local Interconnection Trunks ..... Parity with Retail
- UNE Line Splitting Without Conditioning ..... ADSL Provided to Retail
- With Conditioning ..... <= 12 Days
- UNE Other Design ..... Retail Design
- UNE Other Non-Design ..... Retail Residence and Business
- EELs ..... Retail DS1/DS3
- UNE UDC/IDSL ..... Retail ISDN - BRI

SEEM Measure

SEEM	Tier I	Tier II
Yes	X	X

SEEM Disaggregation - Analog/Benchmark

SEEM Disaggregation	SEEM Analog/Benchmark
Resale Residence	Retail Residence
Resale Business	Retail Business
Resale Design	Retail Design
Resale PBX	Retail PBX
Resale Centrex	Retail Centrex
Resale ISDN	Retail ISDN
LNP (Standalone)	Retail Residence and Business (POTS)
INP (Standalone)	Retail Residence and Business (POTS)
2W Analog Loop Design	Retail Residence and Business Dispatch
2W Analog Loop Non-Design	Retail Residence and Business – (POTS Excluding Switch-Based Orders)
2W Analog Loop with LNP - Design	Retail Residence and Business Dispatch
2W Analog Loop with LNP- Non-Design	Retail Residence and Business – (POTS Excluding Switch-Based Orders)
2W Analog Loop with INP-Design	Retail Residence and Business Dispatch
2W Analog Loop with INP-Non-Design	Retail Residence and Business – (POTS Excluding Switch-Based Orders)
UNE Digital Loop < DS1	Retail Digital Loop < DS1
UNE Digital Loop >= DS1	Retail Digital Loop >=DS1
UNE Loop + Port Combinations	Retail Residence and Business
- Dispatch In	- Dispatch In
- Switch Based	- Switch Based
UNE Switch Ports	Retail Residence and Business (POTS)
UNE Combo Other	Retail Residence, Business and Design Dispatch
UNE xDSL (HDSL, ADSL and UCL)	
- Without Conditioning	- <= 5 Days
- With Conditioning	- <= 12 Days
UNE ISDN	Retail ISDN - BRI
UNE Line Sharing Without Conditioning	ADSL Provided to Retail
With Conditioning	<= 12 Days
Local Transport (Unbundled Interoffice Transport)	Retail DS1/DS3 Interoffice
Local Interconnection Trunks	Parity with Retail
UNE Line Splitting Without Conditioning	ADSL Provided to Retail
With Conditioning	<= 12 Days
UNE Other Design	Retail Design
UNE Other Non-Design	Retail Residence and Business
EELs	Retail DS1/DS3
UNE UDC/IDSL	Retail ISDN/BRI

P-4A: Average Order Completion and Completion Notice Interval (AOCCNI) Distribution

(Deleted)

P-5: Average Completion Notice Interval

Definitions

The Completion Notice Interval is the elapsed time between the BellSouth reported completion of work and the issuance of a valid completion notice to the CLEC.

Exclusions

- Canceled Service Orders
- Order Activities of BellSouth or the CLEC associated with internal or administrative use of local services (Record Orders, Listing Orders, Test Orders, etc.) Test order types may be C, N, R, or T.
- D & F orders (Exception: "D" orders associated with LNP Standalone)

Business Rules

Measurement on interval of completion date and time entered by a field technician on dispatched orders, and 5PM start time on the due date for non-dispatched orders; to the release of a notice to the CLEC/BellSouth of the completion status. The field technician notifies the CLEC the work was complete and then he/she enters the completion time stamp information in his/her computer. This information switches through to the SOCS systems either completing the order or rejecting the order to the Work Management Center (WMC). If the completion is rejected, it is manually corrected and then completed by the WMC. The notice is returned on each individual order.

The start time for all orders is the completion stamp either by the field technician or the 5PM due date stamp; the end time for mechanized orders is the time stamp the notice was delivered to the CLEC interface (LENS, EDI, OR TAG). For non-mechanized orders-the end time will be date and timestamp of order update from the FAX record via LON or C-SOTS system. For the retail analog, the start time is when the technician completes the order and the end time is when the order status is changed to complete in SOCS.

Calculation

Completion Notice Interval = (a - b)

- a = Date and Time of Notice of Completion
- b = Date and Time of Work Completion

Average Completion Notice Interval = c / d

- c = Sum of all Completion Notice Intervals
- d = Number of Orders with Notice of Completion in Reporting Period

Report Structure

- CLEC Specific
- CLEC Aggregate
- BellSouth Aggregate
- Mechanized Orders
- Non-Mechanized Orders
- Dispatch/Non-Dispatch
- Reporting intervals in Hours; 0,1- <= 2, > 2 - <= 4, > 4 - <= 8, > 8 - <= 12, > 12- <= 24, > 24 plus Overall Average Hour Interval
- Reported in categories of <10 line / circuits; >= 10 line/circuits (except trunks)
- Geographic Scope
  - State
  - Region

Data Retained

Relating to CLEC Experience

- Report Month
- CLEC Order Number (so_nbr)
- Work Completion Date (cmpltn_dt)
- Work Completion Time
- Completion Notice Availability Date
- Completion Notice Availability Time
- Service Type
- Geographic Scope

Note: Code in parentheses is the corresponding header found in the raw data file.

Relating to BellSouth Performance

- Report Month
- BellSouth Order Number (so_nbr)
- Work Completion Date (cmpltn_dt)
- Work Completion Time
- Completion Notice Availability Date
- Completion Notice Availability Time
- Service Type
- Geographic Scope

Note: Code in parentheses is the corresponding header found in the raw data file.

SQM Disaggregation - Analog/Benchmark

SQM Level of Disaggregation	SQM Analog/Benchmark
Resale Residence	Retail Residence
Resale Business	Retail Business
Resale Design	Retail Design
Resale PBX	Retail PBX
Resale Centrex	Retail Centrex
Resale ISDN	Retail ISDN
LNP (Standalone)	Retail Residence and Business (POTS)
INP (Standalone)	Retail Residence and Business (POTS)
2W Analog Loop Design	Retail Residence and Business Dispatch
2W Analog Loop Non-Design	Retail Residence and Business – (POTS Excluding Switch-Based Orders)
2W Analog Loop with LNP - Design	Retail Residence and Business Dispatch
2W Analog Loop with LNP- Non-Design	Retail Residence and Business - POTS Excluding Switch-Based Orders
2W Analog Loop with INP-Design	Retail Residence and Business Dispatch
2W Analog Loop with INP-Non-Design	Retail Residence and Business - POTS Excluding Switch-Based Orders
UNE Digital Loop < DS1	Retail Digital Loop < DS1
UNE Digital Loop >= DS1	Retail Digital Loop >= DS1
UNE Loop + Port Combinations	Retail Residence and Business
- Dispatch In	- Dispatch In
- Switch Based	- Switch Based
UNE Switch Ports	Retail Residence and Business (POTS)
UNE Combo Other	Retail Residence, Business and Design Dispatch
UNE xDSL (HDSL, ADSL and UCL)	ADSL Provided to Retail

- UNE ISDN (Includes UDC) ..... Retail ISDN - BRI
- UNE Line Sharing ..... ADSL Provided to Retail
- Local Transport (Unbundled Interoffice Transport) ..... Retail DS1/DS3 Interoffice
- Local Interconnection Trunks ..... Parity with Retail
- UNE Line Splitting ..... ADSL to Retail
- UNE Other Design ..... Retail Design
- UNE Other Non-Design ..... Retail Residence and Business
- EELs ..... Retail DS1/DS3

SEEM Measure

SEEM	Tier I	Tier II
No		

SEEM Disaggregation - Analog/Benchmark

SEEM Disaggregation	SEEM Analog/Benchmark
• Not Applicable	Not Applicable

P-6: % Completions/Attempts without Notice or < 24 hours Notice

Definition

The purpose of this measure is to report if BellSouth is returning a FOC to the CLEC in time for the CLEC to notify their customer of the scheduled date.

Exclusions

- Canceled Orders
- Expedited Orders
- "0" dated orders or any request where the subscriber requested an earlier due date of < 24 hours prior to the original commitment date, or any LSR received < 24 hours prior to the original commitment date.

Business Rules

For CLEC Results:

Calculation would exclude any successful or unsuccessful service delivery where the CLEC was informed at least 24 hours in advance. BellSouth may also exclude from calculation any LSRs received from the requesting CLEC with less than 24 hour notice prior to the commitment date.

Calculation

Percent Completions or Attempts without Notice or with Less Than 24 Hours Notice = (a / b) X 100

- a = Completion Dispatches (Successful and Unsuccessful) With No FOC or FOC Received < 24 Hours of Original Committed Due Date
- b = All Completions

Report Structure

- CLEC Specific
- CLEC Aggregate
- Dispatch /Non-Dispatch
- Total Orders FOC < 24 Hours
- Total Completed Service Orders
- % FOC < 24 Hours
- Geographic Scope
  - State
  - Region

Data Retained

Relating to CLEC Experience

- Committed Due Date (DD)
- FOC End Timestamp
- Report Month
- CLEC Order Number and PON

Relating to BellSouth Performance

- Not Applicable

SQM Disaggregation - Analog/Benchmark

SQM Level of Disaggregation	SQM Analog/Benchmark
• Resale Residence	<= 5%
• Resale Business	
• Resale Design	
• Resale PBX	
• Resale Centrex	
• Resale ISDN	
• LNP (Standalone)	
• INP (Standalone)	
• 2W Analog Loop Design	
• 2W Analog Loop Non-Design	
• 2W Analog Loop Design with LNP	
• 2W Analog Loop Non-Design with LNP	
• 2W Analog Loop Design with INP	
• 2W Analog Loop Non-Design with INP	
• UNE Digital Loop < DS1	
• UNE Digital Loop >= DS1	
• UNE Loop + Port Combinations	
- Dispatch In	
- Switch Based	
• UNE Switch Ports	
• UNE Combo Other	
• UNE xDSL (HDSL, ADSL and UCL)	
• UNE ISDN (Includes UDC)	
• UNE Line Sharing	
• UNE Line Splitting	
• Local Transport (Unbundled Interoffice Transport)	
• Local Interconnection Trunks	
• EELS	

SEEM Measure

SEEM	Tier I	Tier II
No		

SEEM Disaggregation - Analog/Benchmark

SEEM Disaggregation	SEEM Analog/Benchmark
• Not Applicable	Not Applicable

P-6: % Completions/Attempts without Notice or < 24 hours Notice

P-7: Coordinated Customer Conversions Interval

Definition

This report measures the average time it takes BellSouth to disconnect an unbundled loop from the BellSouth switch and cross connect it to CLEC equipment. This measurement applies to service orders with INP and LNP, and where the CLEC has requested BellSouth to provide a coordinated cutover.

Exclusions

- Any order canceled by the CLEC will be excluded from this measurement.
- Delays due to CLEC following disconnection of the unbundled loop
- Unbundled Loops where there is no existing subscriber loop and loops where coordination is not requested.

Business Rules

Where the service order includes LNP, the interval includes the total time for the cutover including the translation time to place the line back in service on the ported line. When the service order includes INP, the interval includes the total time for the cutover including the translation time to place the link back in service on the ported line. The interval is calculated for the entire cutover time for the service order and then divided by items worked in that time to give the average per-item interval for each service order.

Calculation

Coordinated Customer Conversions Interval = (a - b)

- a = Completion Date and Time for Cross Connection of a Coordinated Unbundled Loop
- b = Disconnection Date and Time of an Coordinated Unbundled Loop

Percent Coordinated Customer Conversions (for each interval) = (c / d) X 100

- c = Total number of Coordinated Customer Conversions for each interval
- d = Total Number of Unbundled Loop with Coordinated Conversions (items) for the reporting period

Report Structure

- CLEC Specific
- CLEC Aggregate
- The interval breakout is 0-5 = 0-<=5, 5-15 = >5-<=15, >=15 = 15 and greater, plus Overall Average Interval
- Geographic Scope
  - State
  - Region

Data Retained

Relating to CLEC Experience

- Report Month
- CLEC Order Number
- Committed Due Date (DD)
- Service Type (CLASS_SVC_DESC)
- Cutover Start Time
- Cutover Completion time
- Portability Start and Completion Times (INP orders)
- Total Conversions (Items)

Note: Code in parentheses is the corresponding header found in the raw data file.

Relating to BellSouth Performance

- No BellSouth Analog Exists

SQM Disaggregation - Analog/Benchmark

SQM Level of Disaggregation	SQM Analog/Benchmark
• Unbundled Loops with INP	95% <= 15 minutes
• Unbundled Loops with LNP	95% <= 15 minutes

SEEM Measure

SEEM	Tier I	Tier II
Yes	X	X

SEEM Disaggregation - Analog/Benchmark

SEEM Disaggregation	SEEM Analog/Benchmark
• Unbundled Loops With INP	95% <= 15 minutes
• Unbundled Loops With LNP	95% <= 15 minutes

P-7A: Coordinated Customer Conversions – Hot Cut Timeliness % within Interval and Average Interval

Definition

This category measures whether BellSouth begins the cutover of an unbundled loop on a coordinated and/or a time specific order at the CLEC requested start time. It measures the percentage of orders where the cut begins within 15 minutes of the requested start time of the order and the average interval.

Exclusions

- Any order canceled by the CLEC will be excluded from this measurement.
- Delays caused by the CLEC
- Unbundled Loops where there is no existing subscriber loop and loops where coordination is not requested.
- All unbundled loops on multiple loop orders after the first loop
- Test Orders

Business Rules

This report measures whether BellSouth begins the cutover of an unbundled loop on a coordinated and/or a time specific order at the CLEC requested start time. The cut is considered on time if it starts 15 minutes before or after the requested start time. Using the scheduled time and the actual cutover start time, the measurement will calculate the percent within interval and the average interval. If a cut involves multiple lines, the cut will be considered "on time" if the first line is cut within the interval. <= 15 minutes includes intervals that began 15:00 minutes or less before the scheduled cut time and cuts that began 15 minutes or less after the scheduled cut time; >15 minutes, <= 30 minutes includes cuts within 15:00 – 30:00 minutes either prior to or after the scheduled cut time; >30 minutes includes cuts greater than 30:00 minutes either prior to or after the scheduled cut time. If IDLC is involved, a four hour window applies to the start time. (8 A.M. to Noon or 1 P.M. to 5 P.M.) This only applies if BellSouth notifies the CLEC by 10:30 A.M. on the day before the due date that the service is on IDLC.

Calculation

% within Interval = (a / b) X 100

- a = Total Number of Coordinated Unbundled Loop Orders for the interval
- b = Total Number of Coordinated Unbundled Loop Orders for the reporting period

Interval = (c - d)

- c = Scheduled Time for Cross Connection of a Coordinated Unbundled Loop Order
- d = Actual Start Date and Time of a Coordinated Unbundled Loop Order

Average Interval = (e / f)

- Sum of all Intervals
- Total Number of Coordinated Unbundled Loop Orders for the reporting period.

Report Structure

- CLEC Specific
- CLEC Aggregate
  Reported in intervals of early, on time and late cuts % <= 15 minutes; % >15 minutes, <= 30 minutes; % >30 minutes, plus Overall Average Interval
- Geographic Scope
  - State
  - Region
- Percentages are reported in intervals of early, on time and late cuts for IDLC and non-IDLC cuts

  On Time (Non-IDLC)
  <= 15 minutes
  Note: This is a 30-minute bucket representing a cut that begins 15 minutes or less before or after the scheduled start time.

  Early (Non-IDLC)
  >15 minutes - <= 30 minutes
  >30 minutes - <= 60 minutes
  >60 minutes - <= 120 minutes
  >120 minutes - <= 180 minutes
  >180 minutes - <= 240 minutes
  <= 240 minutes

  Late (Non-IDLC)
  >15 minutes - <= 30 minutes
  >30 minutes - <= 60 minutes
  >60 minutes - <= 120 minutes
  >120 minutes - <= 180 minutes
  >180 minutes - <= 240 minutes
  >240 minutes
  Overall Average Interval for non-IDLC

  On Time (IDLC)
  <= 2 hours
  Note: This is a 4-hour bucket representing a cut involving IDLC that begins 2 hours or less before or after the scheduled start time

  Early (IDLC)
  >2 hours

  Late (IDLC)
  >2 hours
  Overall Average Interval for IDLC

Data Retained

Relating to CLEC Experience

- Report Month
- CLEC Order Number (so_nbr)
- Committed Due Date (DD)
- Service Type (CLASS_SVC_DESC)
- Cutover Scheduled Start Time
- Cutover Actual Start Time
- Total Conversions Orders

Note: Code in parentheses is the corresponding header found in the raw data file.

Relating to BellSouth Performance

- No BellSouth Analog exists

SQM Disaggregation - Analog/Benchmark

SQM Level of Disaggregation	SQM Analog/Benchmark
• Product Reporting Level	95% within + or – 15 Minutes of Scheduled Start Time
- SL1 Time Specific	
- SL1 Non-Time Specific	
- SL2 Time Specific	
- SL2 Non-Time Specific	
- SL1 IDLC	95% within 4-Hour Window
- SL2 IDLC	

SEEM Measure

SEEM	Tier I	Tier II
Yes	X	X

SEEM Disaggregation - Analog/Benchmark

SEEM Disaggregation	SEEM Analog/Benchmark
- SL1 Time Specific	95% within + or – 15 Minutes of Scheduled Start Time
- SL1 IDLC	
- SL1 Non-Time Specific	
- SL2 Time Specific	
- SL2 Non-Time Specific	95% within 4-Hour Window
- SL2 IDLC	

P-7B: Coordinated Customer Conversions – Average Recovery Time

Definition

Measures the time between notification and resolution by BellSouth of a service outage found that can be isolated to the BellSouth side of the network. The time between notification and resolution by BellSouth must be measured to ensure that CLEC customers do not experience unjustifiable lengthy service outages during a Coordinated Customer Conversion. This report measures outages associated with Coordinated Customer Conversions prior to service order completion.

Exclusions

- Cutovers where service outages are due to CLEC caused reasons when the CLEC agrees
- Cutovers where service outages are due to end-user caused reasons when the CLEC agrees
- Test Orders

Business Rules

Measures the outage duration time related to Coordinated Customer Conversions from the initial trouble notification until the trouble has been restored and the CLEC has been notified. The duration time is defined as the time from the initial trouble notification until the trouble has been restored and the CLEC has been notified. The interval is calculated on the total outage time for the circuits divided by the total number of outages restored during the report period to give the average outage duration.

Calculation

Recovery Time = (a - b)

- a = Date and Time That Trouble is Closed by CLEC
- b = Date and Time Initial Trouble is Opened with BellSouth

Average Recovery Time = (c / d)

- c = Sum of all the Recovery Times per circuit
- d = Number of Troubles per circuit Referred to BellSouth

Report Structure

- CLEC Specific
- CLEC Aggregate
- Geographic Scope
  - State
  - Region

Data Retained

Relating to CLEC Experience

- Report Month
- CLEC Company Name
- CLEC Order Number (so_nbr)
- Committed Due Date (DD)
- Service Type (CLASS_SVC_DESC)
- CLEC Acceptance Conflict (CLEC_CONFLICT)
- CLEC Conflict Resolved (CLEC_CON_RES)
- CLEC Conflict MFC (CLEC_CONFLICT_MFC)

- Total Conversion Orders

Note: Code in parentheses is the corresponding header found in the raw data file.

Relating to BellSouth Performance

- None

SQM Disaggregation - Analog/Benchmark

SQM Level of Disaggregation	SQM Analog/Benchmark
• Unbundled Loops with INP	<= 5 Hours
• Unbundled Loops with LNP	<= 5 Hours

SEEM Measure

SEEM	Tier I	Tier II
No		

SEEM Disaggregation - Analog/Benchmark

SEEM Disaggregation	SEEM Analog/Benchmark
• Not Applicable	Not Applicable

P-7C: Hot Cut Conversions - % Provisioning Troubles Received within 7 Days of a Completed Service Order

Definition

The Percent Provisioning Troubles received within 7 days of a completed service order associated with a Hot Cut Conversion (CCC) measures the quality and accuracy of Coordinated Customer Conversion Activities.

Exclusions

- Any order cancelled by the CLEC
- Troubles caused by Customer Provided Equipment
- Test Orders

Business Rules

Measures the quality and accuracy of completed service orders associated with Coordinated and Non-coordinated Customer Conversions. The first trouble report received on a circuit ID within 7 days following a service order completion is counted in this measure. Subsequent trouble reports are measured in Repeat Report Rate. Reports are calculated searching in the prior report period for completed Coordinated Customer Conversion service orders and following 7 days after the completion of the service order for a trouble report issue date.

Calculation

% Provisioning Troubles within 7 days of service order completion = (a / b) X 100

- a = The sum of all CCC Circuits with a trouble within 7 days following service order(s) completion
- b = The total number of CCC service order circuits completed in the previous report calendar month

Report Structure

- CLEC Specific
- CLEC Aggregate
- Dispatch/Non-Dispatch
- Geographic Scope
  - State
  - Region

Data Retained

Relating to CLEC Experience

- Report Month
- CLEC Order Number (so_nbr)
- PON
- Order Submission Date (TICKET_ID)
- Order Submission Time (TICKET_ID)
- Status Type
- Status Notice Date
- Standard Order Activity
- Geographic Scope
- Total Conversion Circuits

Note: Code in parentheses is the corresponding header found in the raw data file.

Relating to BellSouth Performance

- No BellSouth Analog exists

SQM Disaggregation - Analog/Benchmark

SQM Level of Disaggregation	SQM Analog/Benchmark
• UNE Loop Design	<= 3%
• UNE Loop Non-Design	<= 3%

SEEM Measure

SEEM	Tier I	Tier II
Yes	X	X

SEEM Disaggregation - Analog/Benchmark

SEEM Disaggregation	SEEM Analog/Benchmark
• UNE Loop Design	<= 3%
• UNE Loop Non-Design	<= 3%

P-8: Cooperative Acceptance Testing - % of xDSL Loops Successfully Passing Cooperative Testing

Definition

A loop will be considered successfully cooperatively tested when both the CLEC and BellSouth representatives agree that the loop meets the technical specifications set forth in TR 73600.

Exclusions

- Testing failures due to CLEC (incorrect contact number, CLEC not ready, etc.)
- xDSL lines with no request for cooperative testing
- Test Orders

Business Rules

When a BellSouth technician finishes delivering an order for an xDSL loop where the CLEC order calls for cooperative testing at the customer's premise, the BellSouth technician is to call a toll free number to the CLEC testing center. The BellSouth technician and the CLEC representative at the center then test the line. As an example of the type of testing performed, the testing center may ask the technician to put a short on the line so that the center can run a test to see if it can identify the short. CLEC caused failures will be captured in the raw data files.

Calculation

Cooperative Acceptance Testing - % of xDSL Loops Successfully Tested = (a / b) X 100

- a = Total number of successful xDSL cooperative tests for xDSL lines where cooperative testing was requested in the reporting period
- b = Total Number of xDSL line tests requested by the CLEC and scheduled in the reporting period

Report Structure

- CLEC Specific
- CLEC Aggregate
- Type of Loop Tested
- Geographic Scope
  - State
  - Region

Data Retained

Relating to CLEC Experience

- Report Month
- CLEC Company Name (OCN)
- CLEC Order Number (so_nbr) and PON (PON)
- Committed Due Date (DD)
- Service Type (CLASS_SVC_DESC)
- Acceptance Testing Completed (ACCEPT_TESTING)
- Acceptance Testing Declined (ACCEPT_TESTING)
- Total xDSL Orders
- Missed Appointments Code (SO_MISSED_CMMT_CD)

Note: Code in parentheses is the corresponding header found in the raw data file.

Relating to BellSouth Performance

- No BellSouth Analog Exists

SQM Disaggregation - Analog/Benchmark

SQM Level of Disaggregation	SQM Analog/Benchmark
• UNE xDSL - ADSL - HDSL - UCL - OTHER	95% of Lines Successfully Tested

SEEM Measure

SEEM	Tier I	Tier II
Yes	X	X

SEEM Disaggregation - Analog/Benchmark

SEEM Disaggregation	SEEM Analog/Benchmark
• UNE xDSL - ADSL - HDSL - UCL - Other	95% of Lines Successfully Tested

P-9: % Provisioning Troubles within 30 Days of Service Order Completion

Definition

Percent Provisioning Troubles within 30 days of Service Order Completion measures the quality and accuracy of Service order activities.

Exclusions

- Cancelled Service Orders
- Order Activities of BellSouth or the CLEC associated with internal or administrative use of local services (Record Orders, Listing Orders, Test Orders, etc.) Test order types may be C, N, R, or T.
- D & F orders
- Trouble reports caused and closed out to Customer Provided Equipment (CPE)

Business Rules

Measures the quality and accuracy of completed orders. The first trouble report received after service order completion is counted in this measure. Subsequent trouble reports are measured in Repeat Report Rate. Reports are calculated searching in the prior report period for completed service orders and following 30 days after completion of the service order for a trouble report issue date.

D & F orders are excluded as there is no subsequent activity following a disconnect.

Note: Standalone LNP historical data is not available in the maintenance systems (LMOS or WFA).

Calculation

% Provisioning Troubles within 30 days of Service Order Activity = (a / b) X 100

- a = Trouble reports on all completed orders within 30 days following service order(s) completion
- b = All Service Orders completed in the previous report calendar month

Report Structure

- CLEC Specific
- CLEC Aggregate
- BellSouth Aggregate
- Reported in categories of <10 line/circuits; >= 10 line/circuits (except trunks)
- Dispatch /Non-Dispatch (except trunks)
- Geographic Scope
  - State
  - Region

Data Retained

Relating to CLEC Experience

- Report Month
- CLEC Order Number and PON
- Order Submission Date (TICKET_ID)
- Order Submission Time (TICKET_ID)
- Status Type
- Status Notice Date

- Standard Order Activity
- Geographic Scope

Note: Code in parentheses is the corresponding header found in the raw data file.

Relating to BellSouth Performance

- Report Month
- BellSouth Order Number
- Order Submission Date
- Order Submission Time
- Status Type
- Status Notice Date
- Standard Order Activity
- Geographic Scope

SQM Disaggregation - Analog/Benchmark

SQM Level of Disaggregation	SQM Analog/Benchmark
• Resale Residence	Retail Residence
• Resale Business	Retail Business
• Resale Design	Retail Design
• Resale PBX	Retail PBX
• Resale Centrex	Retail Centrex
• Resale ISDN	Retail ISDN
• LNP (Standalone)	Retail Residence and Business (POTS)
• INP (Standalone)	Retail Residence and Business (POTS)
• 2W Analog Loop Design	Retail Residence and Business Dispatch
• 2W Analog Loop Non-Design	Retail Residence and Business - (POTS Excluding Switch-Based Orders)
• 2W Analog Loop with LNP Design	Retail Residence and Business Dispatch
• 2W Analog Loop with LNP Non-Design	Retail Residence and Business - (POTS Excluding Switch-Based Orders)
• 2W Analog Loop with INP Design	Retail Residence and Business Dispatch
• 2W Analog Loop with INP Non-Design	Retail Residence and Business (POTS - Excluding Switch-Based Orders)
• UNE Digital Loop < DS1	Retail Digital Loop < DS1
• UNE Digital Loop >= DS1	Retail Digital Loop >= DS1
• UNE xDSL (HDSL, ADSL and UCL)	ADSL provided to Retail
• UNE ISDN (Includes UDC)	Retail ISDN BRI
• UNE Line Sharing	ADSL Provided to Retail
• UNE Loop + Port Combinations	Retail Residence and Business
- Dispatch In	- Dispatch In
- Switch-Based	- Switch Based
• UNE Switch Ports	Retail Residence and Business (POTS)
• UNE Combo Other	Retail Residence, Business and Design Dispatch (Including Dispatch Out and Dispatch In)
• Local Transport (Unbundled Interoffice Transport)	Retail DS1/DS3 Interoffice
• UNE Other Non-Design	Retail Residence and Business
• UNE Other Design	Retail Design
• Local Interconnection Trunks	Parity with Retail
• UNE Line Splitting	ADSL to Retail
• EELs	Retail DS1/DS3

SEEM Measure

SEEM	Tier I	Tier II
Yes	X	X

SEEM Disaggregation - Analog/Benchmark

SEEM Disaggregation	SEEM Analog/Benchmark
• Resale Residence	Retail Residence
• Resale Business	Retail Business
• Resale Design	Retail Design
• Resale PBX	Retail PBX
• Resale Centrex	Retail Centrex
• Resale ISDN	Retail ISDN
• LNP (Standalone)	Retail Residence and Business (POTS)
• INP (Standalone)	Retail Residence and Business (POTS)
• 2W Analog Loop Design	Retail Residence and Business Dispatch
• 2W Analog Loop Non-Design	Retail Residence and Business - (POTS Excluding Switch-Based Orders)
• 2W Analog Loop with LNP Design	Retail Residence and Business Dispatch
• 2W Analog Loop with LNP Non-Design	Retail Residence and Business - (POTS Excluding Switch-Based Orders)
• 2W Analog Loop with INP Design	Retail Residence and Business Dispatch
• 2W Analog Loop with INP Non-Design	Retail Residence and Business (POTS - Excluding Switch-Based Orders)
• UNE Digital Loop < DS1	Retail Digital Loop < DS1
• UNE Digital Loop >= DS1	Retail Digital Loop >= DS1
• UNE Loop + Port Combinations	Retail Residence and Business
- Dispatch In	- Dispatch In
- Switch-Based	- Switch-Based
• UNE Switch Ports	Retail Residence and Business (POTS)
• UNE Combo Other	Retail Residence, Business and Design Dispatch (Including Dispatch Out and Dispatch In)
• UNE xDSL (HDSL, ADSL and UCL)	ADSL provided to Retail
• UNE ISDN (Includes UDC)	Retail ISDN BRI
• UNE Line Sharing	ADSL Provided to Retail
• Local Transport (Unbundled Interoffice Transport)	Retail DS1/DS3 Interoffice
• Local Interconnection Trunks	Parity with Retail
• UNE Line Splitting	ADSL Provided to Retail
• UNE Other Non-Design	Retail Residence and Business
• UNE Other Design	Retail Design
• EELs	Retail DS1/DS3

P-10: Total Service Order Cycle Time (TSOCT)
(Deleted)

P-11: Service Order Accuracy

Definition

The "service order accuracy" measurement measures the accuracy and completeness of BellSouth service orders by comparing what was ordered and what was completed.

Exclusions

- Canceled Service Orders
- Order Activities of BellSouth or the CLEC associated with internal or administrative use of local services (Record Orders, Listing Orders, Test Orders, etc.)
- D & F orders

Business Rules

A statistically valid sample of service orders, completed during a monthly reporting period, is compared to the original account profile and the order that the CLEC sent to BellSouth. An order is "completed without error" if all service attributes and account detail changes (as determined by comparing the original order) completely and accurately reflect the activity specified on the original order and any supplemental CLEC order. For both small and large sample sizes, when a Service Request cannot be matched with a corresponding Service Order, it will not be counted. For small sample sizes an effort will be made to replace the service request.

Service Order Accuracy Sampling Process: A list of all orders completed in the report month is generated. The orders are then listed by the disaggregations specified in the SQM. For each disaggregation, the quantity of completed orders and the error rate for each disaggregation from the previous month are entered into a "Stratified Random Sampling for Proportions" formula. This formula determines the number of orders that are to be reviewed for each disaggregation. Once the sample size for each disaggregation is determined, the specified quantity of orders for each disaggregation are pulled for review.

Calculation

Percent Service Order Accuracy = (a / b) X 100

- a = Orders Completed without Error
- b = Orders Completed in Reporting Period

Report Structure

- CLEC Aggregate
- Reported in categories of <10 line/circuits; >= 10 line/circuits
- Dispatch/Non-Dispatch

Data Retained

Relating to CLEC Experience

- Report Month
- CLEC Order Number and PON
- Local Service Request (LSR)
- Order Submission Date
- Committed Due Date
- Service Type
- Standard Order Activity

Relating to BellSouth Performance

- No BellSouth Analog Exist

SQM Disaggregation - Analog/Benchmark

SQM Level of Disaggregation	SQM Analog/Benchmark
• Resale Residence	95% Accurate
• Resale Business	
• Resale Design (Specials)	
• UNE Specials (Design)	
• UNE (Non-Design)	
• Local Interconnection Trunks	

SEEM Measure

SEEM	Tier I	Tier II
Yes		X

SEEM Disaggregation - Analog/Benchmark

SEEM Disaggregation	SEEM Analog/Benchmark
• Resale	95%
• UNE	95%
• UNE-P	95%

Note: This measure to be replaced when P-11A is implemented.

***Note**: This measure becomes effective with September 2003 service orders. The Service Order Accuracy measure as defined in the previous SQM will be effective prior to that time.*

P-11A: Service Order Accuracy

Definition

The Service Order Accuracy measurement measures the accuracy and completeness of CLEC requests for service by comparing the CLEC Local Service Request (LSR) to the completed service order after provisioning has been completed. Only electronically submitted LSRs that require manual handling by a BellSouth service representative in the LCSC are measured.

Exclusions

- Canceled Service Orders
- Order Activities of BellSouth or the CLEC associated with internal or administrative use of local services (Record Orders, Listing Orders, orders using test OCNs, which may be coded C, N, R or T etc.)
- Disconnect Orders
- CLEC LSRs submitted manually (FAX or Courier)
- CLEC LSRs submitted electronically that are not manually handled by BellSouth (Flow Through)

Business Rules

Only CLEC LSRs submitted electronically that fall out of the electronic system for manual processing (partially mechanized) by a BellSouth representative and the resulting service orders are selected for this measure. The CLEC requested services on the LSR are compared to the completed service order using the CLEC-Affecting Service Attributes shown below.

Selected CLEC-Affecting Service Attributes

The BellSouth Local Service Request (LSR) fields identified below will be used, as applicable, for this Service Order Accuracy review process.

BellSouth LSR Fields

The fields listed below would only be captured as a miss when they are service affecting. For the purpose of the Service Order Accuracy measure, if any of the fields listed below are populated on the LSR and do not match the corresponding field on the Service Order, but this mismatch does not affect the correct provisioning of the Service Order, the field is not considered to be service affecting and therefore will not be included as a miss in this measure. An example would be LCSC/System workarounds, which will be identified in a document posted on the Interconnection website. CLECs may discuss any of the posted LCSC/System Workarounds during the regular PMAP notification calls.

- Company Code
- PON
- Billed Telephone Number
- Telephone Number
- Ported Telephone Number
- Circuit ID
- PIC
- LPIC
- Directory Listing
  - Directory Delivery Address
  - Listing Activity
  - Alphanumeric Listing Identifier Code
  - Record Type

  - Listing Type
  - Listed Telephone Number
  - Listed Name, Last Name
  - Listed Name, First Name
  - Address Indicator
  - Listed Address House Number
  - Listed Address House Number Suffix
  - Listed Address Street Directional
  - Listed Address Street Name
  - Listed Address Thoroughfare
  - Listed Address Street Suffix
  - Listed Address Locality
  - Yellow Pages Heading
- Features
  - Feature Activity
  - Feature Codes
  - Feature Detail*
- Hunting
  - Hunt Group Activity
  - Hunt Group Identifier
  - Telephone Number Identifier
  - Hunt Type Code
  - Hunt Line Activity
  - Hunting Sequence
  - Number Type
  - Hunting Telephone Number
- E911 Listing
  - Service Address House Number
  - Service Address House Number Suffix
  - Service Address Street Directional
  - Service Address Street Name
  - Service Address Thoroughfare
  - Service Address Street Suffix
  - Service Address Descriptive Location
- EATN
- ATN
- APOT
- CFA
- NC
- NCI

* Feature Detail will only be checked for the following USOCs: GCE, GCJ, CREX4, GCJRC, GCZ, DRS, VMSAX, S98VM, S98AF, SMBBX, MBBRX. USOCs and FIDs for Feature Detail will be posted on the Interconnection Website. Any changes to the USOCs and FIDs required to continue checking the identical service will be updated on this Website.

Calculation

Percent Service Order Accuracy = (a / b) X 100

- a = Applicable Orders Completed without Error
- b = Applicable Orders Completed in Reporting Period

Report Structure

- CLEC Specific
- CLEC Aggregate
- Geographic Scope

- Region

Data Retained

Relating to CLEC Experience

- Report Month
- CLEC Order Number (PON)
- Local Service Request (LSR) Number
- BellSouth Service Order Number
- BellSouth Service Order Completion Date
- Service Type (Resale, UNE, UNE-P)
- Standard Order Activity

Relating to BellSouth Performance

- No BellSouth Analog Exists

SQM Disaggregation – Analog/Benchmark

SQM Level of Disaggregation	SQM Analog/Benchmark
Resale	95% Accurate
UNE	95% Accurate
UNE-P	95% Accurate

SEEM Measure

SEEM	Tier I	Tier II	Tier III
Yes	X	X	

SEEM Disaggregation - Analog/Benchmark

SEEM Disaggregation	SEEM Analog/Benchmark
Resale	95% Accurate
UNE	95% Accurate
UNE-P	95% Accurate

P-12: LNP-Average Disconnect Timeliness Interval & Disconnect Timeliness Interval Distribution

(Deleted)

P-13B: LNP - Percent Out of Service < 60 Minutes

Definition

The Number of LNP related conversions where the time required to facilitate the activation of the port in BellSouth's network is less than 60 minutes, expressed as a percentage of total number of activations that took place.

Exclusions

- CLEC-caused errors
- NPAC caused errors unless caused by BellSouth
- Standalone LNP orders with more than 500 number activations

Business Rules

The Start time is the Receipt of the NPAC broadcast activation message in BellSouth's LSMS. The End time is when the Provisioning event is successfully completed in BellSouth's network as reflected in BellSouth's LSMS. Count the number of activations that took place in less than 60 minutes.

Calculation

Percent Out of Service < 60 Minutes = (a / b) X 100

- a = Number of activations provisioned in less than 60 minutes
- b = Total LNP activations

Report Structure

- CLEC Specific
- CLEC Aggregate
- Geographic Scope
  - State
  - Region

Data Retained

Relating to CLEC Experience

- Order Number
- Telephone Number/Circuit Number
- Committed Due Date
- Date/Time of Recent Change Notice

Relating to BellSouth Performance

- SOCS Completion Date and Time Stamp
- CLEC Activate Message

SQM Disaggregation – Analog/Benchmark

SQM Level of Disaggregation	SQM Analog/Benchmark
• LNP	> = 96.5%

SEEM Measure

SEEM	Tier I	Tier II	Tier III
Yes	X	X	

SEEM Disaggregation - Analog/Benchmark

SEEM Disaggregation	SEEM Analog/Benchmark
• LNP	> = 96.5%

P-13C: LNP – Percentage of Time BellSouth Applies the 10-Digit Trigger Prior to the LNP Order Due Date

Definition

Percentage of time BellSouth applies 10-digit trigger for LNP TNs prior to the due date.

Exclusions

Excludes CLEC or Customer caused misses or delays.

Business Rules

Obtain number of LNP TNs where the 10-digit trigger was applicable prior to due date, and the total number of LNP TNs where the 10-digit trigger was applicable.

Calculation

Percentage of 10-Digit Applications = (a / b) X 100

- a = Count of LNP TNs for which 10-digit trigger was applied prior to due date
- b = Total LNP TNs for which 10-digit triggers were applicable

Report Structure

- CLEC Specific
- CLEC Aggregate
- Geographic Scope
  - State
  - Region

Data Retained

Relating to CLEC Experience

- Order Number
- Telephone Number/Circuit Number
- Committed Due Date
- Date/Time of Recent Change Notice

Relating to BellSouth Performance

- SOCS Completion Date and Time Stamp
- CLEC Activate Message

SQM Disaggregation - Analog/Benchmark

SQM Level of Disaggregation	SQM Analog/Benchmark
• LNP (Standalone)	Benchmark: 95%

SEEM Measure

SEEM	Tier I	Tier II
Yes	X	X

SEEM Disaggregation	SEEM Analog/Benchmark
• LNP (Standalone)	Benchmark: 95%

P-13D: LNP - Average Disconnect Timeliness Interval (Non-Trigger)

Definition

Disconnect Timeliness is defined as the interval between the time ESI Number Manager receives the valid 'Number Ported' message from NPAC (signifying the CLEC 'Activate') until the time the Disconnect is completed in the Central Office switch. This interval effectively measures BellSouth responsiveness by isolating it from impacts that are caused by CLEC related activities.

Exclusions

- Canceled Service Orders
- Order Activities of BellSouth or the CLEC associated with internal or administrative use of local services (Record Orders, Listing Orders, Test Orders, etc.) where identifiable. Order types may be C, N, R, or T.
- CLEC-caused errors
- NPAC-caused errors, unless caused by BellSouth
- Incomplete Ports where only a subset of activate messages have been received compared with the LSR and create messages.
- Orders which are candidates for 10 digit triggers, except those that did not receive 10 digit triggers prior to the port out date.
- LSRs where the CLEC did not contact BST within 30 minutes after Activate Message.

Business Rules

The Disconnect Timeliness interval is determined for each telephone number ported associated with a disconnect service order processed on an LSR during the reporting period. The Disconnect Timeliness interval is the elapsed time from when BellSouth receives a valid 'Number Ported' message in ESI Number Manager (signifying the CLEC 'Activate') for each telephone number ported until each number on the service order is disconnected in the Central Office switch. Elapsed time for each ported number is accumulated for each reporting dimension. The accumulated time for each reporting dimension is then divided by the total number of selected telephone numbers disconnected in the reporting period. Non-Business hours will be excluded from the duration calculation for unscheduled after hours LNP ports. This will yield a benchmark equivalent to by 12:00 noon the next business day thus, keeping the benchmark at 4 hours.

Calculation

Disconnect Timeliness Interval = (a - b)

- a = Completion Date and Time in Central Office switch for each number on disconnect order
- b = Valid 'Number Ported' message received date and time

Average Disconnect Timeliness Interval = (c / d)

- c = Sum of all Disconnect Timeliness Intervals
- d = Total Number of disconnected numbers completed in reporting period

Report Structure

- CLEC Specific
- CLEC Aggregate
- Geographic Scope
  - State
  - Region

Data Retained

Relating to CLEC Experience

- Order Number
- Telephone Number/Circuit Number
- Committed Due Date
- Receipt Date/Time (ESI Number Manager)
- Date/Time of Recent Change Notice

Relating to BellSouth Performance

- SOCS Completion Date and Time Stamp
- CLEC Activate Message

SQM Disaggregation – Analog/Benchmark

SQM Level of Disaggregation	SQM Analog/Benchmark
LNP (Normal Working Hours and Approved After Hours)	95% < = 4 Hours
LNP (Unscheduled After Hours Ports)	95% <= 4 Hours (excluding non-business hours)

SEEM Measure

SEEM	Tier I	Tier II
Yes	X	X

SEEM Disaggregation - Analog/Benchmark

- LNP (Normal Working Hours and Approved After Hours)..... 95% < = 4 Hours
- LNP (Unscheduled After Hours Ports)..... 95% <= 4 Hours (excluding non-business hours)

Section 4: Maintenance & Repair

M&R-1: Missed Repair Appointments

Definition

The percent of customer trouble reports not cleared by the committed date and time.

Exclusions

- Trouble tickets canceled at the CLEC request
- BellSouth trouble reports associated with internal or administrative service
- Customer Provided Equipment (CPE) troubles or CLEC Equipment Trouble

Business Rules

The negotiated commitment date and time is established when the repair report is received. The cleared time is the date and time that BellSouth personnel clear the trouble and closes the trouble report in his/her Computer Access Terminal (CAT) or workstation. If this is after the Commitment time, the report is flagged as a "Missed Commitment" or a missed repair appointment. When the data for this measure is collected for BellSouth and a CLEC, it can be used to compare the percentage of the time repair appointments are missed due to BellSouth reasons. (No access reports are not part of this measure because they are not a missed appointment.)

> **Note**: Appointment intervals vary with force availability in the POTS environment. Specials and Trunk intervals are standard interval appointments of no greater than 24 hours. Standalone LNP historical data is not available in the maintenance systems (LMOS or WFA).

Calculation

Percentage of Missed Repair Appointments = (a / b) X 100

- a = Count of Customer Troubles Not Cleared by the Quoted Commitment Date and Time
- b = Total Customer Trouble reports closed in Reporting Period

Report Structure

- Dispatch/Non-Dispatch
- CLEC Specific
- CLEC Aggregate
- BellSouth Aggregate
- Geographic Scope
  - State
  - Region

Data Retained

Relating to CLEC Experience

- Report Month
- CLEC Company Name
- Submission Date and Time (TICKET_ID)
- Completion Date (CMPLTN_DT)
- Service Type (CLASS_SVC_DESC)
- Disposition and Cause (CAUSE_CD & CAUSE_DESC)

Note: Code in parentheses is the corresponding header found in the raw data file.

Relating to BellSouth Performance

- Report Month
- BellSouth Company Code
- Submission Date and Time
- Completion Date
- Service Type
- Disposition and Cause (Non-Design /Non-Special Only)
- Trouble Code (Design and Trunking Services)

SQM Disaggregation - Analog/Benchmark

SQM Level of Disaggregation	SQM Analog/Benchmark
Resale Residence	Retail Residence
Resale Business	Retail Business
Resale Design	Retail Design
Resale PBX	Retail PBX
Resale Centrex	Retail Centrex
Resale ISDN	Retail ISDN
2W Analog Loop Design	Retail Residence & Business Dispatch
2W Analog Loop Non – Design	Retail Residence & Business (POTS) (Exclusion of Switch-based feature troubles)
UNE Digital Loop < DS1	Retail Digital Loop < DS1
UNE Digital Loop >= DS1	Retail Digital Loop >= DS1
UNE Loop + Port Combinations	Retail Residence and Business
UNE Switch ports	Retail Residence and Business (POTS)
UNE Combo Other	Retail Residence, Business and Design Dispatch
UNE xDSL (HDSL, ADSL and UCL)	ADSL Provided to Retail
UNE ISDN	Retail ISDN – BRI
UNE Line Sharing	ADSL provided to Retail
UNE Other Design	Retail Design
UNE Other Non-Design	Retail Residence and Business
Local Interconnection Trunks	Parity with Retail
Local Transport (Unbundled Interoffice Transport)	Retail DS1/DS3 Interoffice

SEEM Measure

SEEM	Tier I	Tier II
Yes	X	X

SEEM Disaggregation - Analog/Benchmark

SEEM Disaggregation	SEEM Analog/Benchmark
• Resale Residence	Retail Residence
• Resale Business	Retail Business
• Resale Design	Retail Design
• Resale PBX	Retail PBX
• Resale Centrex	Retail Centrex
• Resale ISDN	Retail ISDN
• 2W Analog Loop Design	Retail Residence and Business Dispatch
• 2W Analog Loop Non – Design	Retail Residence and Business (POTS) (Exclusion of Switch-based feature troubles)
• UNE Digital Loop < DS1	Retail Digital Loop < DS1
• UNE Digital Loop >= DS1	Retail Digital Loop >= DS1
• UNE Loop + Port Combinations	Retail Residence & Business
• UNE Switch ports	Retail Residence & Business (POTS)
• UNE Combo Other	Retail Residence, Business and Design Dispatch
• UNE xDSL (HDSL, ADSL and UCL)	ADSL provided to Retail
• UNE ISDN	Retail ISDN – BRI
• UNE Line Sharing	ADSL Provided to Retail
• UNE Other Design	Retail Design
• UNE Other Non-Design	Retail Residence and Business
• Local Transport (Unbundled Interoffice Transport)	Retail DS1/DS3 Interoffice
• Local Interconnection Trunks	Parity with Retail

M&R-2: Customer Trouble Report Rate

Definition

Initial and repeated customer direct or referred customer troubles reported within a calendar month per 100 lines/circuits in service.

Exclusions

- Trouble tickets canceled at the CLEC request.
- BellSouth trouble reports associated with internal or administrative service.
- Customer Provided Equipment (CPE) troubles or CLEC Equipment Trouble.

Business Rules

Customer Trouble Report Rate is computed by accumulating the number of maintenance initial and repeated trouble reports during the reporting period. The resulting number of trouble reports are divided by the total "number of service" lines, ports or combination that exist for the CLECs and BellSouth respectively at the end of the report month.

Calculation

Customer Trouble Report Rate = (a / b) X 100

- a = Count of Initial and Repeated Customer Trouble Reports closed in the Current Period
- b = Number of Service Access Lines in service at End of the Report Period

Report Structure

- CLEC Specific
- CLEC Aggregate
- BellSouth Aggregate
- Dispatch/Non-Dispatch
- Geographic Scope
  - State
  - Region

Data Retained

Relating to CLEC Experience

- Report Month
- CLEC Company Name
- Ticket Submission Date and Time (TICKET_ID)
- Ticket Completion Date (CMPLTN_DT)
- Service Type (CLASS_SVC_DESC)
- Disposition and Cause (CAUSE_CD & CAUSE_DESC)
- # Service Access Lines in Service at the end of period

Note: Code in parentheses is the corresponding header found in the raw data file.

Relating to BellSouth Performance

- Report Month
- BellSouth Company Code
- Ticket Submission Date and Time
- Ticket Completion Date
- Service Type
- Disposition and Cause (Non-Design /Non-Special Only)
- Trouble Code (Design and Trunking Services)
- # Service Access Lines in Service at the end of period

SQM Disaggregation - Analog/Benchmark

SQM Level of Disaggregation	SQM Analog/Benchmark
Resale Residence	Retail Residence
Resale Business	Retail Business
Resale Design	Retail Design
Resale PBX	Retail PBX
Resale Centrex	Retail Centrex
Resale ISDN	Retail ISDN
2W Analog Loop Design	Retail Residence and Business Dispatch
2W Analog Loop Non – Design	Retail Residence and Business (POTS) (Exclusion of Switch-based feature troubles)
UNE Digital Loop < DS1	Retail Digital Loop < DS1
UNE Digital Loop >= DS1	Retail Digital Loop >= DS1
UNE Loop + Port Combinations	Retail Residence and Business
UNE Switch Ports	Retail Residence and Business (POTS)
UNE Combo Other	Retail Residence, Business and Design Dispatch
UNE xDSL (HDSL, ADSL and UCL)	ADSL Provided to Retail
UNE ISDN	Retail ISDN – BRI
UNE Line Sharing	ADSL Provided to Retail
UNE Other Design	Retail Design
UNE Other Non-Design	Retail Residence and Business
Local Interconnection Trunks	Parity with Retail
Local Transport (Unbundled Interoffice Transport)	Retail DS1/DS3 Interoffice

SEEM Measure

SEEM	Tier I	Tier II
Yes	X	X

SEEM Disaggregation - Analog/Benchmark

SEEM Disaggregation	SEEM Analog/Benchmark
Resale Residence	Retail Residence
Resale Business	Retail Business
Resale Design	Retail Design
Resale PBX	Retail PBX
Resale Centrex	Retail Centrex
Resale ISDN	Retail ISDN
2W Analog Loop Design	Retail Residence and Business Dispatch
2W Analog Loop Non – Design	Retail Residence and Business (POTS) (Exclusion of Switch-based feature troubles)
UNE Digital Loop < DS1	Retail Digital Loop < DS1
UNE Digital Loop > DS1	Retail Digital Loop >= DS1
UNE Loop + Port Combinations	Retail Residence and Business
UNE Switch Ports	Retail Residence and Business (POTS)

- UNE Combo Other ..... Retail Residence, Business and Design Dispatch
- UNE xDSL (HDSL, ADSL and UCL) ..... ADSL Provided to Retail
- UNE ISDN ..... Retail ISDN – BRI
- UNE Line Sharing ..... ADSL Provided to Retail
- UNE Other Design..... Retail Design
- UNE Other Non-Design ..... Retail Residence and Business
- Local Transport (Unbundled Interoffice Transport) ..... Retail DS1/DS3 Interoffice
- Local Interconnection Trunks..... Parity with Retail

M&R-3: Maintenance Average Duration

Definition

The Average duration of Customer Trouble Reports from the receipt of the Customer Trouble Report to the time the trouble report is cleared.

Exclusions

- Trouble tickets canceled at the CLEC request.
- BellSouth trouble reports associated with internal or administrative service.
- Customer Provided Equipment (CPE) troubles or CLEC Equipment Trouble.

Business Rules

For Average Duration the clock starts on the date and time of the receipt of the correct report information, i.e. correct telephone number, correct circuit identification, trouble description, etc. for the repair request. The clock stops on the date and time the service is restored and the BellSouth or CLEC customer is notified (when the technician completes the trouble ticket on his/her CAT or work systems).

Calculation

Maintenance Duration = (a - b)

- a = Date and Time of Service Restoration
- b = Date and Time Customer Trouble Ticket was Opened

Average Maintenance Duration = (c / d)

- c = Total of all maintenance durations in the reporting period
- d = Total Closed Customer Troubles in the reporting period

Report Structure

- Dispatch/Non-Dispatch
- CLEC Specific
- CLEC Aggregate
- BellSouth Aggregate
- Geographic Scope
  - State
  - Region

Data Retained

Relating to CLEC Experience

- Report Month
- Total Tickets (LINE_NBR)
- CLEC Company Name
- Ticket Submission Date and Time (TICKET_ID)
- Ticket Completion Date (CMPLTN_DT)
- Service Type (CLASS_SVC_DESC)
- Disposition and Cause (CAUSE_CD & CAUSE_DESC)

Note: Code in parentheses is the corresponding header found in the raw data file.

Relating to BellSouth Performance

- Report Month
- Total Tickets
- BellSouth Company Code
- Ticket Submission Date
- Ticket Submission Time
- Ticket Completion Date
- Ticket Completion Time
- Total Duration Time
- Service Type
- Disposition and Cause (Non-Design/Non-Special Only)
- Trouble Code (Design and Trunking Services)

SQM Disaggregation - Analog/Benchmark

SQM Level of Disaggregation	SQM Analog/Benchmark
Resale Residence	Retail Residence
Resale Business	Retail Business
Resale Design	Retail Design
Resale PBX	Retail PBX
Resale Centrex	Retail Centrex
Resale ISDN	Retail ISDN
2W Analog Loop Design	Retail Residence and Business Dispatch
2W Analog Loop Non – Design	Retail Residence and Business (POTS) (Exclusion of Switch-based feature troubles)
UNE Digital Loop < DS1	Retail Digital Loop < DS1
UNE Digital Loop >= DS1	Retail Digital Loop >= DS1
UNE Loop + Port Combinations	Retail Residence and Business
UNE Switch ports	Retail Residence and Business (POTS)
UNE Combo Other	Retail Residence, Business & Design Dispatch
UNE xDSL (HDSL, ADSL and UCL)	ADSL Provided to Retail
UNE ISDN	Retail ISDN – BRI
UNE Line Sharing	ADSL Provided to Retail
UNE Other Design	Retail Design
UNE Other Non-Design	Retail Residence and Business
Local Transport (Unbundled Interoffice Transport)	Retail DS1/DS3 Interoffice
Local Interconnection Trunks	Parity with Retail

SEEM Measure

SEEM	Tier I	Tier II
Yes	X	X

SEEM Disaggregation - Analog/Benchmark

SEEM Disaggregation	SEEM Analog/Benchmark
Resale Residence	Retail Residence
Resale Business	Retail Business
Resale Design	Retail Design
Resale PBX	Retail PBX
Resale Centrex	Retail Centrex
Resale ISDN	Retail ISDN
2W Analog Loop Design	Retail Residence and Business Dispatch
2W Analog Loop Non – Design	Retail Residence and Business (POTS) (Exclusion of Switch-based feature troubles)
UNE Digital Loop < DS1	Retail Digital Loop < DS1

- UNE Digital Loop >= DS1 ..... Retail Digital Loop >= DS1
- UNE Loop + Port Combinations ..... Retail Residence and Business
- UNE Switch ports ..... Retail Residence and Business (POTS)
- UNE Combo Other ..... Retail Residence, Business and Design Dispatch
- UNE xDSL (HDSL, ADSL and UCL) ..... ADSL Provided to Retail
- UNE ISDN ..... Retail ISDN – BRI
- UNE Line Sharing ..... ADSL Provided to Retail
- UNE Other Design ..... Retail Design
- UNE Other Non-Design ..... Retail Residence and Business
- Local Transport (Unbundled Interoffice Transport) ..... Retail DS1/DS3 Interoffice
- Local Interconnection Trunks ..... Parity with Retail

M&R-4: Percent Repeat Troubles within 30 Days

Definition

Percent Customer Repeat Troubles within 30 Days measures the percent of customer troubles, during the current reporting period, that had at least one prior trouble ticket on the same line/circuit, anytime in the proceeding 30 calendar days from the receipt of the current trouble report.

Exclusions

- Trouble tickets canceled at the CLEC request.
- BellSouth trouble reports associated with internal or administrative service.
- Customer Provided Equipment (CPE) troubles or CLEC Equipment Trouble.

Business Rules

This measure includes Customer trouble reports on the same line/circuit, received within 30 days of an original Customer trouble report, using the 'cleared date' of the first trouble and the 'received date' of the next trouble.

Calculation

Percent Repeat Customer Troubles within 30 Days = (a / b) X 100

- a = Count of Customer Troubles using the 'received date' where more than one trouble report was logged for the same service line/circuit, within a continuous 30 days
- b = Count of Total Customer Trouble Reports using the 'cleared date', in the Reporting Period

Report Structure

- Dispatch/Non-Dispatch
- CLEC Specific
- CLEC Aggregate
- BellSouth Aggregate
- Geographic Scope
  - State
  - Region

Data Retained

Relating to CLEC Experience

- Report Month
- Total Tickets (LINE_NBR)
- CLEC Company Name
- Ticket Submission Date and Time (TICKET_ID)
- Ticket Completion Date (CMPLTN_DT)
- Total and Percent Repeat Customer Trouble Reports within 30 Days (TOT_REPEAT)
- Service Type
- Disposition and Cause (CAUSE_CD & CAUSE_DESC)

Note: Code in parentheses is the corresponding header found in the raw data file.

Relating to BellSouth Performance

- Report Month

- Total Tickets
- BellSouth Company Code
- Ticket Submission Date
- Ticket Submission Time
- Ticket Completion Date
- Ticket Completion Time
- Total and Percent Repeat Customer Trouble Reports within 30 Days
- Service Type
- Disposition and Cause (Non-Design /Non-Special Only)
- Trouble Code (Design and Trunking Services)

SQM Disaggregation - Analog/Benchmark

SQM Level of Disaggregation	SQM Analog/Benchmark
Resale Residence	Retail Residence
Resale Business	Retail Business
Resale Design	Retail Design
Resale PBX	Retail PBX
Resale Centrex	Retail Centrex
Resale ISDN	Retail ISDN
2W Analog Loop Design	Retail Residence and Business Dispatch
2W Analog Loop Non – Design	Retail Residence and Business (POTS) (Exclusion of Switch-based feature troubles)
UNE Digital Loop < DS1	Retail Digital Loop < DS1
UNE Digital Loop >= DS1	Retail Digital Loop >= DS1
UNE Loop + Port Combinations	Retail Residence and Business
UNE Switch ports	Retail Residence and Business (POTS)
UNE Combo Other	Retail Residence, Business and Design Dispatch
UNE xDSL (HDSL, ADSL and UCL)	ADSL Provided to Retail
UNE ISDN	Retail ISDN – BRI
UNE Line Sharing	ADSL Provided to Retail
UNE Other Design	Retail Design
UNE Other Non-Design	Retail Residence and Business
Local Transport (Unbundled Interoffice Transport)	Retail DS1/DS3 Interoffice
Local Interconnection Trunks	Parity with Retail

SEEM Measure

SEEM	Tier I	Tier II
Yes	X	X

SEEM Disaggregation - Analog/Benchmark

SEEM Disaggregation	SEEM Analog/Benchmark
Resale Residence	Retail Residence
Resale Business	Retail Business
Resale Design	Retail Design
Resale PBX	Retail PBX
Resale Centrex	Retail Centrex
Resale ISDN	Retail ISDN
2W Analog Loop Design	Retail Residence and Business Dispatch
2W Analog Loop Non – Design	Retail Residence and Business (POTS) (Exclusion of Switch-based feature troubles)
UNE Digital Loop < DS1	Retail Digital Loop < DS1
UNE Digital Loop >= DS1	Retail Digital Loop >= DS1
UNE Loop + Port Combinations	Retail Residence and Business
UNE Switch ports	Retail Residence and Business (POTS)
UNE Combo Other	Retail Residence, Business and Design Dispatch

- UNE xDSL (HDSL, ADSL and UCL) ..... ADSL Provided to Retail
- UNE ISDN ..... Retail ISDN – BRI
- UNE Line Sharing ..... ADSL Provided to Retail
- UNE Other Design..... Retail Design
- UNE Other Non-Design ..... Retail Residence and Business
- Local Transport (Unbundled Interoffice Transport) ..... Retail DS1/DS3 Interoffice
- Local Interconnection Trunks..... Parity with Retail

M&R-5: Out of Service (OOS) > 24 Hours

Definition

For Out of Service Customer Troubles (no dial tone, cannot be called or cannot call out) the percentage of Total OOS Customer Troubles cleared in excess of 24 hours. (All design services are considered to be out of service).

Exclusions

- Trouble Reports canceled at the CLEC request
- BellSouth Trouble Reports associated with administrative service
- Customer Provided Equipment (CPE) Troubles or CLEC Equipment Troubles.

Business Rules

Customer Trouble reports that are out of service and cleared in excess of 24 hours. The clock begins when the customer trouble report is created in LMOS/WFA and the customer trouble is counted if the elapsed time exceeds 24 hours.

Calculation

Out of Service (OOS) > 24 hours = (a / b) X 100

- a = Total Cleared Customer Troubles OOS > 24 Hours
- b = Total OOS Customer Troubles in Reporting Period

Report Structure

- Dispatch/Non-Dispatch
- CLEC Specific
- BellSouth Aggregate
- CLEC Aggregate
- Geographic Scope
  - State
  - Region

Data Retained

Relating to CLEC Experience

- Report Month
- Total Tickets
- CLEC Company Name
- Ticket Submission Date and Time (TICKET_ID)
- Ticket Completion Date (CMPLTN_DT
- Percentage of Customer Troubles out of Service > 24 Hours (OOS>24_FLAG)
- Service type (CLASS_SVC_DESC)
- Disposition and Cause (CAUSE_CD & CAUSE-DESC)

Note: Code in parentheses is the corresponding header found in the raw data file.

Relating to BellSouth Performance

- Report Month
- Total Tickets
- BellSouth Company Code
- Ticket Submission Date
- Ticket Submission time
- Ticket Completion Date
- Ticket Completion Time
- Percent of Customer Troubles out of Service > 24 Hours
- Service Type
- Disposition and Cause (Non-Design/Non-Special only)
- Trouble Code (Design and Trunking Services)

SQM Disaggregation - Analog/Benchmark

SQM Level of Disaggregation	SQM Analog/Benchmark
Resale Residence	Retail Residence
Resale Business	Retail Business
Resale Design	Retail Design
Resale PBX	Retail PBX
Resale Centrex	Retail Centrex
Resale ISDN	Retail ISDN
2W Analog Loop Design	Retail Residence and Business Dispatch
2W Analog Loop Non – Design	Retail Residence and Business (POTS) (Exclusion of Switch-based feature troubles)
UNE Digital Loop < DS1	Retail Digital Loop < DS1
UNE Digital Loop >= DS1	Retail Digital Loop >= DS1
UNE Loop + Port Combinations	Retail Residence and Business
UNE Switch ports	Retail Residence and Business (POTS)
UNE Combo Other	Retail Residence, Business and Design Dispatch
UNE xDSL (HDSL, ADSL and UCL)	ADSL provided to Retail
UNE ISDN	Retail ISDN – BRI
UNE Line Sharing	ADSL Provided to Retail
UNE Other Design	Retail Design
UNE Other Non-Design	Retail Residence and Business
Local Transport (Unbundled Interoffice Transport)	Retail DS1/DS3 Interoffice
Local Interconnection Trunks	Parity with Retail

SEEM Measure

SEEM	Tier I	Tier II
Yes	X	X

SEEM Disaggregation - Analog/Benchmark

SEEM Disaggregation	SEEM Analog/Benchmark
Resale Residence	Retail Residence
Resale Business	Retail Business
Resale Design	Retail Design
Resale PBX	Retail PBX
Resale Centrex	Retail Centrex
Resale ISDN	Retail ISDN
2W Analog Loop Design	Retail Residence and Business Dispatch
2W Analog Loop Non – Design	Retail Residence and Business (POTS) (Exclusion of Switch-based feature troubles)
UNE Digital Loop < DS1	Retail Digital Loop < DS1

- UNE Digital Loop >= DS1 ..... Retail Digital Loop >= DS1
- UNE Loop + Port Combinations ..... Retail Residence and Business
- UNE Switch Ports ..... Retail Residence and Business (POTS)
- UNE Combo Other ..... Retail Residence, Business and Design Dispatch
- UNE xDSL (HDSL, ADSL and UCL) ..... ADSL Provided to Retail
- UNE ISDN ..... Retail ISDN – BRI
- UNE Line Sharing ..... ADSL Provided to Retail
- UNE Other Design ..... Retail Design
- UNE Other Non-Design ..... Retail Residence and Business
- Local Transport (Unbundled Interoffice Transport) ..... Retail DS1/DS3 Interoffice
- Local Interconnection Trunks ..... Parity with Retail

M&R-6: Average Answer Time – Repair Centers

Definition

This report measures the average time a customer is in queue when calling a BellSouth Repair Center.

Exclusions

- Abandoned Calls

Business Rules

The clock starts when a CLEC Representative or BellSouth customer makes a choice on the Repair Center's menu and is put in queue for the next repair attendant. The clock stops when the repair attendant answers the call.

Note: The Total Column is a combined BellSouth Residence and Business number.

Calculation

Answer Time for BellSouth Repair Centers = (a - b)

- a = Time BellSouth Repair Attendant Answers Call
- b = Time of entry into queue after ACD Selection

Average Answer Time for BellSouth Repair Centers = (c / d)

- c = Sum of all Answer Times
- d = Total number of calls by reporting period

Report Structure

- CLEC Aggregate
- BellSouth Aggregate
- Geographic Scope
  - Region

Data Retained

Relating to CLEC Experience

- CLEC Average Answer Time

Relating to BellSouth Performance

- BellSouth Average Answer Time

SQM Disaggregation - Analog/Benchmark

SQM Level of Disaggregation

- Region. CLEC/BellSouth Service Centers and BellSouth Repair Centers are regional.

SQM Analog/Benchmark

- For CLEC, Average Answer Times in UNE Center and BRMC are comparable to the Average Answer Times in the BellSouth Repair Centers.

SEEM Measure

SEEM	Tier I	Tier II
No		

SEEM Disaggregation - Analog/Benchmark

SEEM Disaggregation	SEEM Analog/Benchmark
• Not Applicable	Not Applicable

M&R-7: Mean Time To Notify CLEC of Network Outages

Definition

BellSouth will inform the CLEC and appropriate BellSouth personnel of any Network outages (customer impacting).

Exclusions

None

Business Rules

The time it takes for the Network Management Center (NMC) to notify the CLEC and appropriate BellSouth personnel of a customer impacting network incident in equipment that may be utilized by the CLEC. When BellSouth becomes aware of a network incident, the CLEC and appropriate BellSouth personnel will be notified electronically. The notification time for each outage will be measured in minutes and divided by the number of outages for the reporting period. The CLECs will be notified the same way and at the same time as BellSouth personnel. These are broadcast messages. It is up to those receiving the message to determine if they have customers affected by the incident.

Calculation

Time to Notify = (a - b)

- a = Date and Time NMC Notified
- b = Date and Time NMC detected network incident

Mean Time to Notify = (c / d)

- c = Sum of all Times to Notify
- d = Count of all Network Incidents

Report Structure

- BellSouth Aggregate
- CLEC Aggregate
- CLEC Specific
- Geographic Scope
  - Region

Data Retained

Relating to CLEC Experience

- Report Month
- Major Network Events
- Date/Time of Incident
- Date/Time of Notification

Relating to BellSouth Performance

- Report Month
- Major Network Events
- Date/Time of Incident
- Date/Time of Notification

SQM Disaggregation - Analog/Benchmark

SQM Level of Disaggregation	SQM Analog/Benchmark
• BellSouth Aggregate	Parity with Retail
• CLEC Aggregate	Parity with Retail
• CLEC Specific	Parity with Retail

SEEM Measure

SEEM	Tier I	Tier II
No		

SEEM Disaggregation - Analog/Benchmark

SEEM Disaggregation	SEEM Analog/Benchmark
• Not Applicable	Not Applicable

Section 5: Billing

B-1: Invoice Accuracy

Definition

This measure provides the percentage of accuracy of the billing invoices rendered to CLECs during the current month.

Exclusions

- Adjustments not related to billing errors (e.g., credits for service outage, special promotion credits, adjustments to satisfy the customer)
- Test Accounts

Business Rules

The accuracy of billing invoices delivered by BellSouth to the CLEC must enable them to provide a degree of billing accuracy comparative to BellSouth bills rendered to retail customers of BellSouth. CLECs request adjustments on bills determined to be incorrect. The BellSouth Billing verification process includes manually analyzing a sample of local bills from each bill period. The bill verification process draws from a mix of different customer billing options and types of service. An end-to-end auditing process is performed for new products and services. Internal measurements and controls are maintained on all billing processes. The CLEC-specific raw data file (which is available on the PMAP web site) will contain the number of bills and adjustments for the reporting month. The number of bills and bill adjustments will be displayed by OCN and/or ACNA.

Calculation

Invoice Accuracy = [(a - b) / a] X 100

- a = Absolute Value of Total Billed Revenues during current month
- b = Absolute Value of Total Billing Related Adjustments during current month

Measure of Adjustments = [(c-d) / c] X 100

- c = Number of Bills in current month
- d = Number of Billing-related Adjustments in current month

Report Structure

- CLEC Specific
- CLEC Aggregate
- BellSouth Aggregate
- Geographic Scope
  - State
  - Region
- Number of Adjustments

Data Retained

Relating to CLEC Experience

- Report Month
- Invoice Type
  - UNE
  - Resale
  - Interconnection

- Total Billed Revenue
- Total Billing Related Adjustments
- Number of Bills
- Number of Adjustments

Relating to BellSouth Performance

- Report Month
- Retail Type
  - CRIS
  - CABS
- Total Billed Revenue
- Total Billing Related Adjustments

SQM Disaggregation - Analog/Benchmark

SQM Level of Disaggregation	SQM Analog/Benchmark
• Product/Invoice Type - Resale - UNE - Interconnection	Parity with BellSouth Retail Aggregate

SEEM Measure

SEEM	Tier I	Tier II
Yes	X	X

SEEM Disaggregation - Analog/Benchmark

SEEM Disaggregation	SEEM Analog/Benchmark
• Resale	Parity with Retail
• UNE	
• Interconnection	

B-2: Mean Time to Deliver Invoices

Definition

This report measures the mean interval for timeliness of billing invoices sent to CLECs in an agreed upon format. CRIS-based invoices are measured in business days, and CABS-based invoices in calendar days.

Exclusions

None

Business Rules

Bill Distribution is calculated as follows: CRIS BILLS-The number of workdays is reported for CRIS bills. This is calculated by counting the Bill Period date as the first workday. Weekends and holidays are excluded when counting workdays. J/N Bills are counted in the CRIS work day category for the purposes of the measurement since their billing account number (Q account) is provided from the CRIS system.

CABS BILLS-The number of calendar days is reported for CABS bills. This is calculated by counting the day following the Bill Period date as the first calendar day. Weekends and holidays are included when counting the calendar days.

Calculation

Invoice Timeliness = (a - b)

- a = Invoice Transmission Date
- b = Close Date of Scheduled Bill Cycle

Mean Time To Deliver Invoices = (c / d)

- c = Sum of all Invoice Timeliness intervals
- d = Count of Invoices Transmitted in Reporting Period

Report Structure

- CLEC Specific
- CLEC Aggregate
- BellSouth Aggregate
- Geographic Scope
  - State
  - Region

Data Retained

Relating to CLEC Experience

- Report Month
- Invoice Type
  - UNE
  - Resale
  - Interconnection
  - State
- Invoice Transmission Count
- Date of Scheduled Bill Close

Relating to BellSouth Performance

- Report Month
- Invoice Type
  - CRIS
  - CABS
- Invoice Transmission Count
- Date of Scheduled Bill Close

SQM Disaggregation - Analog/Benchmark

SQM Level of Disaggregation

Product/Invoice Type

- Resale
- UNE
- Interconnection
- State

SQM Analog/Benchmark

- CLEC Average Delivery Intervals for both CRIS and CABS Invoices are comparable to BellSouth Average delivery for both systems.

SEEM Measure

SEEM	Tier I	Tier II
Yes	X	X

SEEM Disaggregation - Analog/Benchmark

SEEM Disaggregation	SEEM Analog/Benchmark
CLEC State	Parity with Retail
- CRIS	
- CABS	
BST-State	

B-3: Usage Data Delivery Accuracy

Definition

This measurement captures the percentage of recorded usage that is delivered error free and in an acceptable format to the appropriate Competitive Local Exchange Carrier (CLEC). These percentages will provide the necessary data for use as a comparative measurement for BellSouth performance. This measurement captures Data Delivery Accuracy rather than the accuracy of the individual usage recording.

Exclusions

None

Business Rules

The accuracy of the data delivery of usage records delivered by BellSouth to the CLEC must enable them to provide a degree of accuracy comparative to BellSouth bills rendered to their retail customers. If errors are detected in the delivery process, they are investigated, evaluated and documented. Errors are corrected and the data retransmitted to the CLEC.

Calculation

Usage Data Delivery Accuracy (Packs) = (a - b) / a X 100 **(This calculation not ordered by the FPSC)**

- a = Total number of usage data packs sent during current month
- b = Total number of usage data packs requiring retransmission during current month

Usage Data Delivery Accuracy (Records) = (c - d) / c X 100

- c = Total number of usage records sent during current month
- d = Total number of usage records requiring retransmission during current month

Report Structure

- CLEC Aggregate
- BellSouth Aggregate
- Geographic Scope
  - Region

Data Retained

Relating to CLEC Experience

- Report Month
- Record Type
  - BellSouth Recorded
  - Non-BellSouth Recorded
- Number of Records
- Packs

Relating to BellSouth Performance

- Report Month
- Record Type
- Number of Records
- Packs

SQM Disaggregation - Analog/Benchmark

SQM Level of Disaggregation	SQM Analog/Benchmark
• Region	Parity With Retail

SEEM Measure

SEEM	Tier I	Tier II
Yes	X	X

SEEM Disaggregation - Analog/Benchmark

SEEM Disaggregation	SEEM Analog/Benchmark
• CLEC State (In Florida, SEEM is based on records)	Parity with Retail
• BellSouth Region	

B-4: Usage Data Delivery Completeness

Definition

This measurement provides percentage of complete and accurately recorded usage data (usage recorded by BellSouth and usage recorded by other companies and sent to BellSouth for billing) that is processed and transmitted to the CLEC within thirty (30) days of the message recording date. A parity measure is also provided showing completeness of BellSouth messages processed and transmitted via CMDS. BellSouth delivers its own retail usage from recording location to billing location via CMDS as well as delivering billing data to other companies. Timeliness, Completeness and Mean Time to Deliver Usage measures are reported on the same report.

Exclusions

None

Business Rules

The purpose of these measurements is to demonstrate the level of quality of usage data delivered to the appropriate CLEC. Method of delivery is at the option of the CLEC.

Calculation

Usage Data Delivery Completeness = (a / b) X 100

- a = Total number of Recorded usage records delivered during current month that are within thirty (30) days of the message recording date
- b = Total number of Recorded usage records delivered during the current month

Report Structure

- CLEC Specific
- CLEC Aggregate
- Region

Data Retained

Relating to CLEC Experience

- Report Month
- Record Type
  - BellSouth Recorded
  - Non-BellSouth Recorded

Relating to BellSouth Performance

- None

SQM Disaggregation - Analog/Benchmark

SQM Level of Disaggregation	SQM Analog/Benchmark
Region	>= 98% within 30 Calendar Days

SEEM Measure

SEEM	Tier I	Tier II
No		

SEEM Disaggregation - Analog/Benchmark

SEEM Disaggregation	SEEM Analog/Benchmark
• Not Applicable	Not Applicable

B-5: Usage Data Delivery Timeliness

Definition

This measurement provides a percentage of recorded usage data (usage recorded by BellSouth and usage recorded by other companies and sent to BellSouth for billing) that is delivered to the appropriate CLEC within six (6) calendar days from the receipt of the initial recording. A parity measure is also provided showing timeliness of BellSouth messages processed and transmitted via CMDS. Timeliness, Completeness and Mean Time to Deliver Usage measures are reported on the same report.

Exclusions

None

Business Rules

The purpose of this measurement is to demonstrate the level of timeliness for processing and transmission of usage data delivered to the appropriate CLEC. The usage data will be mechanically transmitted or mailed to the CLEC data processing center once daily. The Timeliness interval of usage recorded by other companies is measured from the date BellSouth receives the records to the date BellSouth distributes to the CLEC. Method of delivery is at the option of the CLEC

Calculation

Usage Data Delivery Timeliness Current month = (a / b) X 100

- a = Total number of usage records sent within six (6) calendar days from initial recording/receipt
- b = Total number of usage records sent

Report Structure

- CLEC Aggregate
- CLEC Specific
- Region

Data Retained

Relating to CLEC Experience

- Report Month
- Record Type
  - BellSouth Recorded
  - Non-BellSouth Recorded

Relating to BellSouth Performance

- None

SQM Level of Disaggregation - Analog/Benchmark

SQM Level of Disaggregation	SQM Analog/Benchmark
• Region	>= 95% Delivered within 6 Calendar Days

SEEM Measure

SEEM	Tier I	Tier II
No		

SEEM Disaggregation - Analog/Benchmark

SEEM Disaggregation	SEEM Analog/Benchmark
• Not Applicable	Not Applicable

B-6: Mean Time to Deliver Usage

Definition

This measurement provides the average time it takes to deliver Usage Records to a CLEC. A parity measure is also provided showing timeliness of BellSouth messages processed and transmitted via CMDS. Timeliness, Completeness and Mean Time to Deliver Usage measures are reported on the same report.

Exclusions

None

Business Rules

The purpose of this measure is to calculate the average number of days it takes BellSouth to deliver usage data to the appropriate CLEC. The calculation reflects the differences between the date the data is transmitted or mailed to the CLEC and the date the data is generated by Customer divided by the total record volume delivery.

Each delivery record is calculated as the time, in days, between when the customer generates the call and when BellSouth delivers the usage data to the CLEC. Each delivery record is categorized by the resulting number of days.

An estimated interval is calculated for each category by taking the total number of usage data records delivered for that period and multiplying it by the total number of days in that period. The mean (average) time to deliver the usage data is calculated by summing all estimated intervals and dividing by the total number of records delivered.

> **Note:** Any usage record falling in the 30+ day interval will be added using an average figure of 31.5 days.

Usage data is mechanically transmitted or mailed to the CLEC data processing center once daily. Method of delivery is at the option of the CLEC.

Calculation

Delivery Interval Record = (a - b)

- a = Date BellSouth delivers the usage data
- b = Date usage data is generated by the customer

Estimated Interval = (c X d)

- c = Number of records delivered in each category
- d = Number of days to deliver for the category

Mean Time to Deliver Usage = (e / f)

- e = Sum of all estimated intervals
- f = Total number of records delivered

Report Structure

- CLEC Aggregate
- CLEC Specific
- Region

Data Retained

Relating to CLEC Experience

- Report Month
- Record Type
  - BellSouth Recorded
  - Non-BellSouth Recorded

Relating to BellSouth Performance

- None

SQM Level of Disaggregation - Analog/Benchmark

SQM Level of Disaggregation	SQM Analog/Benchmark
• Region	<= 6 Days

SEEM Measure

SEEM	Tier I	Tier II
No		

SEEM Disaggregation - Analog/Benchmark

SEEM Disaggregation	SEEM Analog/Benchmark
• Not Applicable	Not Applicable

B-7: Recurring Charge Completeness

Definition

This measure captures percentage of fractional recurring charges appearing on the correct bill.

Exclusions

None

Business Rules

The effective date of the recurring charge must be within 30 days of the bill date for the charge to appear on the correct bill. The count of fractional recurring charges in the calculation refers to a sum of absolute total dollar values either billed on the correct bill or absolute value of total fractional recurring charges on the bill.

Calculation

Recurring Charge Completeness = (a / b) X 100

- a = Count of fractional recurring charges that are on the correct bill[1]
- b = Total count of fractional recurring charges that are on the bill

[1]Correct bill = next available bill

Report Structure

- CLEC Specific
- CLEC Aggregate
- BellSouth Aggregate

Data Retained

Relating to CLEC Experience

- Report Month
- Invoice Type
- Total Recurring Charges Billed
- Total Billed On Time

Relating to BellSouth Performance

- Report Month
- Retail Analog
- Total Recurring Charges Billed
- Total Billed On Time

SQM Level of Disaggregation - Analog/Benchmark

SQM Level of Disaggregation	SQM Analog/Benchmark
Product/Invoice Type	
• Resale	Parity
• UNE	Benchmark 90%
• Interconnection	Benchmark 90%

SEEM Measure

SEEM	Tier I	Tier II
No		

SEEM Disaggregation - Analog/Benchmark

SEEM Disaggregation	SEEM Analog/Benchmark
• Not Applicable	Not Applicable

B-8: Non-Recurring Charge Completeness

Definition

This measure captures percentage of non-recurring charges appearing on the correct bill.

Exclusions

None

Business Rules

The effective date of the non-recurring charge must be within 30 days of the bill date for the charge to appear on the correct bill. The count of non-recurring charges in the calculation refers to a sum of absolute total dollar values either billed on the correct bill or absolute value of total non-recurring charges on the bill.

Calculation

Non-Recurring Charge Completeness = (a / b) X 100

- a = Count of non-recurring charges that are on the correct bill[1]
- b = Total count of non-recurring charges that are on the bill

[1]Correct bill = next available bill

Report Structure

- CLEC Specific
- CLEC Aggregate
- BellSouth Aggregate
- Geographic Scope
  - State

Data Retained

Relating to CLEC Experience

- Report Month
- Invoice Type
- Total Non-Recurring Charges Billed
- Total Billed On Time

Relating to BellSouth Performance

- Report Month
- Retail Analog
- Total Non-Recurring Charges Billed
- Total Billed On Time

SQM Level of Disaggregation - Analog/Benchmark

SQM Level of Disaggregation	SQM Analog/Benchmark
Product/Invoice Type	
• Resale	Parity
• UNE	Benchmark 90%
• Interconnection	Benchmark 90%

SEEM Measure

SEEM	Tier I	Tier II
No		

SEEM Disaggregation - Analog/Benchmark

SEEM Disaggregation	SEEM Analog/Benchmark
• Not Applicable	Not Applicable

B-9: Percent Daily Usage Feed Errors Corrected in "X" Business Days

Definition

Measures the timely correction of Daily Usage Feed (DUF) errors in record information and Pack formats measured separately. Errors included (1) Pack Failure errors and (2) EMI content errors in records.

Exclusions

- Usage that cannot be corrected and resent or usage that the CLEC doesn't want Retransmitted.
- CLEC Problem/Issue/File Retransmission forms disputed by BellSouth SMEs that do not result in an EMI error.
- CLEC notification received by BellSouth > 10 business days from transmission date of errored messages or packs.

Business Rules

This measure will provide the % of errors corrected in "X" Business days.

Pack Failure errors are defined as a DUF header/trailer error containing one or more of the following conditions: Grand total records not equal to records in pack or sequence/invoice numbers for a from RAO is not sequential

EMI content errors are defined as those records with errors contained in the EMI detail records that cause a message to be unbillable by the CLEC

Only notification received via the CLEC Problem/Issue/File Retransmission form will be included in this measure. To locate the form, go to the PMAP web site (http://pmap.bellsouth.com/) and click the Documentation/Exhibits link, then select the "CLEC Problem/Issue/File Retransmission form."

When circumstances arise for multiple content errors it is not necessary for the form to be filled out in its entirety, the CLECs agree to provide sufficient information for content error research so that a thorough investigation and resolution can be completed.

For each type error condition, a new CLEC Problem/Issue/File Retransmission form should be submitted.

EMI content errors should be attached in a separate file from the CLEC Problem/Issue/File Retransmission form

Elapsed time is measured in business days.

The clock starts when BellSouth receives CLEC's Problem/Issue/File Retransmission form.

The clock stops when BellSouth provides the corrected usage to the CLEC using the predesignated DUF delivery method.

This measure applies only to CLECs that are ODUF and ADUF participants

Calculation

Timeliness of Daily Usage EMI Content Errors Corrected = (a / b) X 100

- a = Total number of Daily Usage Records with EMI Content Errors Corrected in the reporting month within 10 Business Days.
- b = Total number of Daily Usage Records with EMI Content Errors corrected in reporting month.

Timeliness of Daily Usage Pack Format Errors Corrected = (c / d) X 100

- c = Total number of Daily Usage Packs with Format Errors Corrected in the reporting month within 4 Business Days.
- d = Total number of Daily Usage Packs with Format Errors corrected in reporting month

Report Structure

- CLEC Specific
  - Total number of BST disputed Daily Usage Records with EMI Content Errors received in reporting month.
  - Total number of Daily Usage Records with EMI Content Errors received in reporting month.
  - Total number of BST disputed Daily Usage Packs with Format Errors received in reporting month
  - Total number of Daily Usage Packs with Format Errors received in reporting month
- CLEC Aggregate
- Geographic Scope
  - Region

Data Retained

Relating to CLEC Experience

- Report Month
  - BellSouth Recorded
  - Non-BellSouth Recorded

Relating to BellSouth Performance

- None

SQM Level of Disaggregation - Analog/Benchmark

SQM Level of Disaggregation	SQM Analog/Benchmark
• Region	Diagnostic

SEEM Measure

SEEM	Tier I	Tier II
No		

SEEM Disaggregation - Analog/Benchmark

SEEM Disaggregation	SEEM Analog/Benchmark
• Not Applicable	Not Applicable

B-10: Percent Billing Errors Corrected in "X" Business Days

Definition

Measures timely carrier bill adjustments.

Exclusions

Adjustments that are initiated by BellSouth

Business Rules

This measure applies to CLEC wholesale bill adjustment requests. IXC Access billing adjustment requests are not reflected in this measure. Elapsed time is measured in business days. The clock starts when BellSouth receives the CLEC Billing Adjustment Request (BAR) form and the clock stops when BellSouth either makes an adjustment through BOCRIS or ACATS (generally next CLEC bill unless adjustment request after middle of the month) or BellSouth denies the request in BDATS or ACATS and BellSouth notifies the CLEC of the BAR resolution. BellSouth will report separately those adjustment requests that are disputed by BellSouth. (BAR form and instructions are found at www.interconnection.bellsouth.com/forms/html/billing&collections.html).

Calculation

Percent Billing Errors Corrected in 45 Business Days = (a / b) X 100

- a = Number of BAR resolutions sent in 45 Business Days
- b = Total Number of BAR resolutions due in Reporting Period

Report Structure

- CLEC Specific
- CLEC Aggregate
- Geographic Scope
  - State
  - Region

Data Retained

Relating to CLEC Experience

- Number of BellSouth Adjustments in 45 Business Days
- Total number of Billing Adjustment Requests in Reporting Period
- Number of Adjustments disputed by BellSouth (reported separately)

Relating to BellSouth Performance

- None

SQM Disaggregation - Retail Analog/Benchmark

SQM Level of Disaggregation	SQM Analog/Benchmark
• State	90% Billing Disputes <= 45 Business Days

SEEM Measure

SEEM	Tier I	Tier II
Yes	X	X

SEEM Disaggregation - Analog/Benchmark

SEEM Disaggregation	SEEM Analog/Benchmark
• State	90% Billing Disputes <= 45 Business Days

Note: In order to set an appropriate penalty provision, staff recommends deferring implementation of the penalty until conclusion of the commission proceeding on the remedy structure of the SEEM Plan, or 120 days, whichever comes first.

Section 6: Operator Services and Directory Assistance

OS-1: Speed to Answer Performance/Average Speed to Answer – Toll

Definition

Measurement of the average time in seconds calls wait before answered by a toll operator.

Exclusions

None

Business Rules

The clock starts when the customer enters the queue and the clock stops when a BellSouth representative answers the call or the customer abandons the call. The length of each call is determined by measuring, using a scanning technique, and accumulating the elapsed time from the entry of a customer call into the BellSouth call management system queue until the customer call is abandoned or transferred to BellSouth personnel assigned to handle calls for assistance. The system makes no distinction between CLEC customers and BellSouth customers.

Calculation

Speed to Answer Performance/Average Speed to Answer – Toll = a / b

- a = Total queue time
- b = Total calls answered

Note: Total queue time includes time that answered calls wait in queue as well as time abandoned calls wait in queue prior to abandonment.

Report Structure

- Reported for the aggregate of BellSouth and CLECs
  - State

Data Retained (on Aggregate Basis)

- For the items below, BellSouth's Performance Measurement Analysis Platform (PMAP) receives a final computation; therefore, no raw data file is available in PMAP
- Month
- Call Type (Toll)
- Average Speed of Answer

SQM Disaggregation - Analog/Benchmark

SQM Level of Disaggregation	SQM Analog/Benchmark
None	Parity by Design

SEEM Measure

SEEM	Tier I	Tier II
No		

SEEM Disaggregation - Analog/Benchmark

SEEM Disaggregation	SEEM Analog/Benchmark
• Not Applicable	Not Applicable

OS-2: Speed to Answer Performance/Percent Answered within "X" Seconds – Toll

Definition

Measurement of the percent of toll calls that are answered in less than ten seconds

Exclusions

None

Business Rules

The clock starts when the customer enters the queue and the clock stops when a BellSouth representative answers the call or the customer abandons the call. The length of each call is determined by measuring, using a scanning technique, and accumulating the elapsed time from the entry of a customer call into the BellSouth call management system queue until the customer call is abandoned or transferred to BellSouth personnel assigned to handle calls for assistance. The system makes no distinction between CLEC customers and BellSouth customers.

Calculation

The Percent Answered within "X" Seconds measurement for toll is derived by using the BellCore Statistical Answer Conversion Tables, to convert the Average Speed to Answer measure into a percent of calls answered within "X" seconds. The BellCore Conversion Tables are specific to the defined parameters of work time, number of operators, max queue size and call abandonment rates.

Report Structure

- Reported for the aggregate of BellSouth and CLECs
  - State

Data Retained (on Aggregate Basis)

- For the items below, BellSouth's Performance Measurement Analysis Platform (PMAP) receives a final computation; therefore, no raw data file is available in PMAP
- Month
- Call Type (Toll)
- Average Speed of Answer

SQM Disaggregation - Analog/Benchmark

SQM Level of Disaggregation:	SQM Analog/Benchmark
None	Parity by Design

SEEM Measure

SEEM	Tier I	Tier II
No		

SEEM Disaggregation - Analog/Benchmark

SEEM Disaggregation	SEEM Analog/Benchmark
• Not Applicable	Not Applicable

DA-1: Speed to Answer Performance/Average Speed to Answer – Directory Assistance (DA)

Definition

Measurement of the average time in seconds calls wait before answered by a DA operator.

Exclusions

None

Business Rules

The clock starts when the customer enters the queue and the clock stops when a BellSouth representative answers the call or the customer abandons the call. The length of each call is determined by measuring, using a scanning technique, and accumulating the elapsed time from the entry of a customer call into the BellSouth call management system queue until the customer call is abandoned or transferred to BellSouth personnel assigned to handle calls for assistance. The system makes no distinction between CLEC customers and BellSouth customers.

Calculation

Speed to Answer Performance/Average Speed to Answer – Directory Assistance (DA) = a / b

- a = Total queue time
- b = Total calls answered

Note: Total queue time includes time that answered calls wait in queue as well as time abandoned calls wait in queue prior to abandonment.

Report Structure

- Reported for the aggregate of BellSouth and CLECs
  - State

Data Retained (on Aggregate Basis)

- For the items below, BellSouth's Performance Measurement Analysis Platform (PMAP) receives a final computation; therefore, no raw data file is available in PMAP
- Month
- Call Type (DA)
- Average Speed of Answer

SQM Level of Disaggregation - Analog/Benchmark

SQM Level of Disaggregation	SQM Analog/Benchmark
None	Parity by Design

SEEM Measure

SEEM	Tier I	Tier II
No		

SEEM Disaggregation - Analog/Benchmark

SEEM Disaggregation	SEEM Analog/Benchmark
• Not Applicable	Not Applicable

DA-2: Speed to Answer Performance/Percent Answered within "X" Seconds – Directory Assistance (DA)

Definition

Measurement of the percent of DA calls that are answered in less than twelve seconds.

Exclusions

None

Business Rules

The clock starts when the customer enters the queue and the clock stops when a BellSouth representative answers the call or the customer abandons the call. The length of each call is determined by measuring, using a scanning technique, and accumulating the elapsed time from the entry of a customer call into the BellSouth call management system queue until the customer call is abandoned or transferred to BellSouth personnel assigned to handle calls for assistance. The system makes no distinction between CLEC customers and BellSouth customers.

Calculation

The Percent Answered within "X" Seconds measurement for DA is derived by using the BellCore Statistical Answer Conversion Tables, to convert the Average Speed to Answer measure into a percent of calls answered within "X" seconds. The BellCore Conversion Tables are specific to the defined parameters of work time, number of operators, max queue size and call abandonment rates.

Report Structure

- Reported for the aggregate of BellSouth and CLECs
  - State

Data Retained (on Aggregate Basis)

- For the items below, BellSouth's Performance Measurement Analysis Platform (PMAP) receives a final computation; therefore, no raw data file is available in PMAP.
- Month
- Call Type (DA)
- Average Speed of Answer

SQM Disaggregation - Analog/Benchmark

SQM Level of Disaggregation	SQM Analog/Benchmark
None	Parity by Design

SEEM Measure

SEEM	Tier I	Tier II
No		

SEEM Disaggregation - Analog/Benchmark

SEEM Disaggregation	SEEM Analog/Benchmark
• Not Applicable	Not Applicable

Section 7: Database Update Information

D-1: Average Database Update Interval

Definition

This report measures the interval from receipt of the database change request to the completion of the update to the database for Line Information Database (LIDB), Directory Assistance and Directory Listings.

Exclusions

- Updates Canceled by the CLEC
- Initial update when supplemented by CLEC
- BellSouth updates associated with internal or administrative use of local services.

Business Rules

The interval for this measure begins with the date and time stamp when a service order is completed and the completion notice is released to all systems to be updated with the order information including Directory Assistance, Directory Listings, and Line Information Database (LIDB). The end time stamp is the date and time of completion of updates to the system. This metric includes updates from stand-alone directory listing orders.

For BellSouth Results:

The BellSouth computation is identical to that for the CLEC with the clarifications noted below.

Other Clarifications and Qualification:

- For LIDB, the elapsed time for a BellSouth update is measured from the point in time when the BellSouth file maintenance process makes the LIDB update information available until the date and time reported by BellSouth that database updates are completed.
- Results for the CLECs are captured and reported at the update level by Reporting Dimension (see below).
- The Completion Date is the date upon which BellSouth issues the Update Completion Notice to the CLEC.
- If the CLEC initiates a supplement to the originally submitted update and the supplement reflects changes in customer requirements (rather than responding to BellSouth initiated changes), then the update submission date and time will be the date and time of BellSouth receipt of a syntactically correct update supplement. Update activities responding to BellSouth initiated changes will not result in changes to the update submission date and time used for the purposes of computing the update completion interval.
- Elapsed time is measured in hours and hundredths of hours rounded to the nearest tenth of an hour.
- Because this should be a highly automated process, the accumulation of elapsed time continues through off-schedule, weekends and holidays; however, scheduled maintenance windows are excluded.

Calculation

Update Interval = (a - b)

- a = Completion Date and Time of Database Update
- b = Submission Date and Time of Database Change

Average Update Interval = (c / d)

- c = Sum of all Update Intervals
- d = Total Number of Updates Completed During Reporting Period

Report Structure

- CLEC Specific (Under development)
- CLEC Aggregate
- BellSouth Aggregate
- Geographic Scope
  - Region

Data Retained

Relating to CLEC Experience

- Database File Submission Time
- Database File Update Completion Time
- CLEC Number of Submissions
- Total Number of Updates

Relating to BellSouth Performance

- Database File Submission Time
- Database File Update Completion Time
- BellSouth Number of Submissions
- Total Number of Updates

SQM Disaggregation - Analog/Benchmark

SQM Level of Disaggregation	SQM Analog/Benchmark
Database Type	Parity by Design
LIDB	
Directory Listings	
Directory Assistance	

SEEM Measure

SEEM	Tier I	Tier II
No		

SEEM Disaggregation - Analog/Benchmark

SEEM Disaggregation	SEEM Analog/Benchmark
Not Applicable	Not Applicable

D-2: Percent Database Update Accuracy

Definition

This report measures the accuracy of database updates by BellSouth for Line Information Database (LIDB) Directory Assistance and Directory Listings using a statistically valid sample of completed CLEC Service Orders in a manual review. This manual review is not conducted on BellSouth Service Orders.

Exclusions

- Updates canceled by the CLEC
- Initial update when supplemented by CLEC
- CLEC orders that had CLEC errors
- BellSouth updates associated with internal or administrative use of local services.

Business Rules

For each update reviewed during the reporting period, the original update that the CLEC sent to BellSouth is compared to the database following completion of the update by BellSouth. An update is "completed without error" if the database completely and accurately reflects the activity specified on the original and supplemental update (e.g., orders) submitted by the CLEC. Each database (e.g., LIDB, Directory Assistance and Directory Listings) should be separately tracked and reported.

A statistically valid sample of completed CLEC Service Orders is pulled each month. This metric includes updates from stand-alone directory listing orders.

Calculation

Percent Update Accuracy = (a / b) X 100

- a = Number of Updates Completed Without Error
- b = Number Updates Completed

Report Structure

- CLEC Aggregate
- CLEC Specific (not available in this report)
- BellSouth Aggregate (not available in this report)
- Geographic Scope
  - Region

Data Retained

Relating to CLEC Experience

- Report Month
- CLEC Order Number (so_nbr) and PON (PON)
- Local Service Request (LSR)
- Order Submission Date
- Number of Orders Reviewed

Note: Code in parentheses is the corresponding header found in the raw data file.

Relating to BellSouth Performance

- Not Applicable

SQM Disaggregation - Analog/Benchmark

SQM Level of Disaggregation	SQM Analog/Benchmark
• Database Type - LIDB - Directory Listings - Directory Assistance	95% Accurate

SEEM Measure

SEEM	Tier I	Tier II
No		

SEEM Disaggregation - Analog/Benchmark

SEEM Disaggregation	SEEM Analog/Benchmark
• Not Applicable	Not Applicable

D-3: Percent NXXs and LRNs Loaded by the LERG Effective Date

Definition

Measurement of the percent of NXX(s) and Location Routing Numbers LRN(s) loaded and tested in new end office and/or tandem switches by the Local Exchange Routing Guide (LERG) effective date when facilities are in place. BellSouth has a single provisioning process for both NXX(s) and LRN(s). In this measure BellSouth will identify whether or not a particular NXX has been flagged as LNP capable (set triggers for dips) by the LERG effective date.

Exclusions

- Activation requests where the CLEC's interconnection arrangements and facilities are not in place by the LERG effective date.
- Expedite requests

Business Rules

Data for the initial NXX(s) and LRN(s) in a local calling area will be based on the LERG effective date or completion of the initial interconnection trunk group(s), whichever is longer. Data for additional NXX(s) in the local calling area will be based on the LERG effective date. The LERG effective date is loaded into the system at the request of the CLEC. It is contingent upon the CLEC to engineer, order, and install interconnection arrangements and facilities prior to that date.

The total Count of NXX(s) and LRN(s) that were scheduled to be loaded and those that were loaded by the LERG effective date in BellSouth switches will be captured in the Work Force Administration - Dispatch In database.

An LRN is assigned by the owner of the switch and is placed into the software translations for every switch to be used as an administrative pointer to route NXX(s) in LNP capable switches. The LRN is a result of Local Number Porting and is housed in a national database provided by the Number Portability Administration Center (NPAC). The switch owner is responsible for notifying NPAC and requesting the effective date that will be reflected in the LERG. The national database downloads routing tables into BellSouth's Service Control Point (SCP) regional databases, which are queried by switches when routing ported numbers.

The basic NXX routing process includes the addition of all NXX(s) in the response translations. This addition to response translations is what supports LRN routing. Routing instructions for all NXX(s), including LRN(s), are received from the Advance Routing & Trunking System (ARTS) and all routing, including response, is established based on the information contained in the Translation Work Instructions (TWINs) document.

Calculation

Percent NXXs/LRNs Loaded and Tested Prior to the LERG Effective Date = (a / b) X 100

- a = Count of NXXs and LRNs loaded by the LERG effective date
- b = Total NXXs and LRNs to be scheduled and loaded by the LERG effective date

Report Structure

- CLEC Specific
- CLEC Aggregate
- BellSouth (Not Applicable)
- Geographic Scope
  - Region

Data Retained

Relating to CLEC Experience

- Company Name
- Company Code
- NPA/NXX
- LERG Effective Date
- Loaded Date

Relating to BellSouth Performance

- Not Applicable

SQM Disaggregation - Analog/Benchmark

SQM Level of Disaggregation	SQM Analog/Benchmark
• Geographic Scope - Region	100% by LERG Effective Date

SEEM Measure

SEEM	Tier I	Tier II
No		

SEEM Disaggregation - Analog/Benchmark

SEEM Disaggregation	SEEM Analog/Benchmark
• Not Applicable	Not Applicable

Section 8: E911

E-1: Timeliness

Definition

Measures the percent of batch orders for E911 database updates (to CLEC resale and BellSouth retail records) processed successfully within a 24-hour period.

Exclusions

- Any resale order canceled by a CLEC
- Facilities-based CLEC orders

Business Rules

The 24-hour processing period is calculated based on the date and time processing starts on the batch orders and the date and time processing stops on the batch orders. Mechanical processing starts when SCC (the BellSouth E911 vendor) receives E911 files containing batch orders extracted from the BellSouth Service Order Control System (SOCS). Processing stops when SCC loads the individual records to the E911 database. The E911 database includes updates to the Automatic Location Identification (ALI) database. The system makes no distinction between CLEC resale records and BellSouth retail records.

Calculation

E911 Timeliness = (a / b) X 100

- a = Number of batch orders processed within 24 hours
- b = Total number of batch orders submitted

Report Structure

Reported for the aggregate of CLEC resale updates and BellSouth retail updates

- State
- Region

Data Retained

- Report Month
- Aggregate Data

SQM Disaggregation - Analog/Benchmark

SQM Level of Disaggregation	SQM Analog/Benchmark
None	Parity by Design

SEEM Measure

SEEM	Tier I	Tier II
No		

SEEM Disaggregation - Analog/Benchmark

SEEM Disaggregation	SEEM Analog/Benchmark
• Not Applicable	Not Applicable

E-2: Accuracy

Definition

Measures the percent of E911 telephone number (TN) record updates (to CLEC resale and BellSouth retail records) processed successfully for E911 (including the Automatic Location Identification (ALI) database).

Exclusions

- Any resale order canceled by a CLEC
- Facilities-based CLEC orders

Business Rules

Accuracy is based on the number of records processed without error at the conclusion of the processing cycle. Mechanical processing starts when SCC (the BellSouth E911 vendor) receives E911 files containing telephone number (TN) records extracted from BellSouth's Service Order Control System (SOCS). The system makes no distinction between CLEC resale records and BellSouth retail records.

Calculation

E911 Accuracy = (a / b) X 100

- a = Number of record individual updates processed with no errors
- b = Total number of individual record updates

Report Structure

Reported for the aggregate of CLEC resale updates and BellSouth retail updates

- State
- Region

Data Retained

- Report Month
- Aggregate Data

SQM Disaggregation - Analog/Benchmark

SQM Level of Disaggregation	SQM Analog/Benchmark
• None	Parity by Design

SEEM Measure

SEEM	Tier I	Tier II
No		

SEEM Disaggregation - Analog/Benchmark

SEEM Disaggregation	SEEM Analog/Benchmark
• Not Applicable	Not Applicable

E-3: Mean Interval

Definition

Measures the mean interval processing of E911 batch orders (to update CLEC resale and BellSouth retail records) including processing against the Automatic Location Identification (ALI) database.

Exclusions

- Any resale order canceled by a CLEC
- Facilities-based CLEC orders

Business Rules

The processing period is calculated based on the date and time processing starts on the batch orders and the date and time processing stops on the batch orders. Data is posted is 4-hour increments up to and beyond 24 hours. The system makes no distinction between CLEC resale records and BellSouth retail records.

Calculation

E911 Interval = (a - b)

- a = Date and time of batch order completion
- b = Date and time of batch order submission

E911 Mean Interval = (c / d)

- c = Sum of all E911 Intervals
- d = Number of batch orders completed

Report Structure

Reported for the aggregate of CLEC resale updates and BellSouth retail updates

- State
- Region

Data Retained

- Report Month
- Aggregate Data

SQM Disaggregation - Analog/Benchmark

SQM Level of Disaggregation	SQM Analog/Benchmark
None	Parity by Design

SEEM Measure

SEEM	Tier I	Tier II
No		

SEEM Disaggregation - Analog/Benchmark

SEEM Disaggregation	SEEM Analog/Benchmark
• Not Applicable	Not Applicable

Section 9: Trunk Group Performance

TGP-1: Trunk Group Performance-Aggregate

Definition

The Trunk Group Performance report displays, over a reporting cycle, aggregate, average trunk group blocking data for each hour of each day of the reporting cycle, for both CLEC affecting and BellSouth affecting trunk groups.

Exclusions

- Trunk Groups blocked due to unanticipated significant increase in CLEC traffic
- Orders that are delayed or refused by CLEC
- Trunk Groups for which there was no valid data available for an entire study period
- Duplicate trunk group information
- Trunk Groups blocked due to CLEC network/equipment failure
- Final Groups actually overflowing, not blocked

Business Rules

The purpose of the Trunk Group Performance Report is to provide trunk blocking measurements on CLEC and BellSouth trunk groups for comparison only. It is not the intent of the report that it be used for network management and/or engineering. BellSouth should notify the CLEC when such blocking meets this exclusion criteria (orders that are delayed or refused by the CLEC) and report the results, both with and without the exclusions. An unanticipated significant increase in traffic is indicated by a 20% increase for small trunk groups or 1800 CCS for large groups over the previous months traffic when the increase was not forecasted by the CLEC.

Monthly Average Blocking:

- The reporting cycle includes both business and non-business days in a calendar month.
- Monthly average blocking values are calculated for each trunk group for each of the 24 time consistent hours across a reporting cycle.

Aggregate Monthly Blocking:

- Used to compare aggregate blocking across trunk groups which terminate traffic at CLEC points of presence versus BellSouth switches.
- Aggregate monthly blocking data is calculated for each hour of the day across all trunk groups assigned to a category.

Trunk Categorization:

- This report displays, over a reporting cycle, aggregate, average blocking data for each hour of a day. Therefore, for each reporting cycle, 24 blocking data points are generated for two aggregate groups of selected trunk groups. These groups are CLEC affecting and BellSouth affecting trunk groups. In order to assign trunk groups to each aggregate group, all trunk groups are first assigned to a category. A trunk group's end points and the type of traffic that is transmitted on it define a category. Selected categories of trunk groups are assigned to the aggregate groups so that trunk reports can be generated. The categories to which trunk groups have been assigned for this report are as follows.

CLEC Affecting Categories:

	Point A	Point B
Category 1:	BellSouth End Office	BellSouth Access Tandem
Category 3:	BellSouth End Office	CLEC Switch
Category 4:	BellSouth Local Tandem	CLEC Switch
Category 5:	BellSouth Access Tandem	CLEC Switch

Category 10:..... BellSouth End Office ..... BellSouth Local Tandem

Category 16:..... BellSouth Tandem..... BellSouth Tandem

BellSouth Affecting Categories:

	Point A	Point B
Category 1:	BellSouth End Office	BellSouth Access Tandem
Category 9:	BellSouth End Office	BellSouth End Office
Category 10:	BellSouth End Office	BellSouth Local Tandem
Category 16:	BellSouth Tandem	BellSouth Tandem

Calculation

Monthly Average Blocking:

- For each hour of the day, each day's raw data are summed across all valid measurements days in a report cycle for blocked and attempted calls.
- The sum of the blocked calls is divided by the total number of calls attempted in a reporting period.

Aggregate Monthly Blocking:

- For each hour of the day, the monthly sums of the blocked and attempted calls from each trunk group are separately aggregated over all trunk groups within each assigned category.
- The total blocked calls is divided by the total call attempts within a group to calculate an aggregate monthly blocking for each assigned group.
- The result is an aggregate monthly average blocking value for each of the 24 hours by group.
- The difference between the CLEC and BellSouth affecting trunk groups are also calculated for each hour.

Report Structure

- CLEC Aggregate
- BellSouth Aggregate
  - State
- With and Without Exclusion for Orders Delayed or Refused by CLEC

Data Retained

Relating to CLEC Experience

- Report Month
- Total Trunk Groups
- Number of Trunk Groups by CLEC
- Hourly Blocking Per Trunk Group
- Hourly Usage Per Trunk Group
- Hourly Call Attempts Per Trunk Group

Related to BellSouth Performance

- Report Month
- Total Trunk Groups
- Aggregate Hourly Blocking Per Trunk Group
- Hourly Usage Per Trunk Group
- Hourly Call Attempts Per Trunk Group

SQM Disaggregation - Analog/Benchmark

SQM Level of Disaggregation	SQM Analog/Benchmark
• CLEC Aggregate	Any consecutive 2 hour period in 24 hours where CLEC blockage exceeds BellSouth blockage by more than 0.5% using trunk groups 1, 3, 4, 5, 10, 16 for CLECs and 9 for BellSouth
• BellSouth Aggregate	

SEEM Measure

SEEM	Tier I	Tier II
Yes		X

SEEM Disaggregation - Analog/Benchmark

SEEM Disaggregation	SEEM Analog/Benchmark
• CLEC Aggregate	Any consecutive 2 hour period in 24 hours where CLEC blockage exceeds BellSouth blockage by more than 0.5% using trunk groups 1,3,4,5,10,16 for CLECs and 9 for BellSouth
• BellSouth Aggregate	

TGP-2: Trunk Group Performance – CLEC Specific

Definition

The Trunk Group Performance report displays, over a reporting cycle, CLEC specific, average trunk group blocking data for each hour of each day of the reporting cycle, for both CLEC affecting and BellSouth affecting trunk groups.

Exclusions

- Trunk Groups blocked due to unanticipated significant increase in CLEC traffic
- Orders that are delayed or refused by CLEC
- Trunk Groups for which there was no valid data available for an entire study period
- Duplicate trunk group information
- Trunk Groups blocked due to CLEC network/equipment failure
- Final Groups actually overflowing not blocked

Business Rules

The purpose of the Trunk Group Performance Report is to provide trunk blocking measurements on CLEC and BellSouth trunk groups for comparison only. It is not the intent of the report that it be used for network management and/or engineering. BellSouth should notify the CLEC when such blocking meets this exclusion criteria (orders that are delayed or refused by the CLEC) and report the results, both with and without the exclusions. An unanticipated significant increase in traffic is indicated by a 20% increase for small trunk groups or 1800 CCS for large groups over the previous months traffic when the increase was not forecasted by the CLEC.

Monthly Average Blocking:

- The reporting cycle includes both business and non-business days in a calendar month.
- Monthly average blocking values are calculated for each trunk group for each of the 24 time consistent hours across a reporting cycle.

Aggregate Monthly Blocking:

- Used to compare aggregate blocking across trunk groups which terminate traffic at CLEC points of presence versus BellSouth switches.
- Aggregate monthly blocking data is calculated for each hour of the day across all trunk groups assigned to a category.

Trunk Categorization:

- This report displays, over a reporting cycle, aggregate, average blocking data for each hour of a day. Therefore, for each reporting cycle, 24 blocking data points are generated for two aggregate groups of selected trunk groups. These groups are CLEC affecting and BellSouth affecting trunk groups. In order to assign trunk groups to each aggregate group, all trunk groups are first assigned to a category. A trunk group's end points and the type of traffic that is transmitted on it define a category. Selected categories of trunk groups are assigned to the aggregate groups so that trunk reports can be generated. The categories to which trunk groups have been assigned for this report are as follows.

CLEC Affecting Categories:

	Point A	Point B
Category 1:	BellSouth End Office	BellSouth Access Tandem
Category 3:	BellSouth End Office	CLEC Switch
Category 4:	BellSouth Local Tandem	CLEC Switch
Category 5:	BellSouth Access Tandem	CLEC Switch
Category 10:	BellSouth End Office	BellSouth Local Tandem

Category 16:..... BellSouth Tandem..... BellSouth Tandem

BellSouth Affecting Categories:

	Point A	Point B
Category 1:	BellSouth End Office	BellSouth Access Tandem
Category 9:	BellSouth End Office	BellSouth End Office
Category 10:	BellSouth End Office	BellSouth Local Tandem
Category 16:	BellSouth Tandem	BellSouth Tandem

Calculation

Monthly Average Blocking:

- For each hour of the day, each day's raw data are summed across all valid measurements days in a report cycle for blocked and attempted calls.
- The sum of the blocked calls is divided by the total number of calls attempted in a reporting period.

Aggregate Monthly Blocking:

- For each hour of the day, the monthly sums of the blocked and attempted calls from each trunk group are separately aggregated over all trunk groups within each assigned category.
- The total blocked calls is divided by the total call attempts within a group to calculate an aggregate monthly blocking for each assigned group.
- The result is an aggregate monthly average blocking value for each of the 24 hours by group.
- The difference between the CLEC and BellSouth affecting trunk groups are also calculated for each hour.

Report Structure

- CLEC Specific
  - State
- With and Without Exclusion for Orders Delayed or Refused by CLEC

Data Retained

Relating to CLEC Experience

- Report Month
- Total Trunk Groups
- Number of Trunk Groups by CLEC
- Hourly Blocking Per Trunk Group
- Hourly Usage Per Trunk Group
- Hourly Call Attempts Per Trunk Group

Relating to BellSouth Performance

- Report Month
- Total Trunk Groups
- Aggregate Hourly Blocking Per Trunk Group
- Hourly Usage Per Trunk Group
- Hourly Call Attempts Per Trunk Group

SQM Disaggregation - Analog/Benchmark

SQM Level of Disaggregation	SQM Analog/Benchmark
• CLEC Trunk Group	Any 2 consecutive hour period in 24 hours where CLEC blockage exceeds BellSouth blockage by more than 0.5% using trunk groups 1, 3, 4, 5, 10, 16 for CLECs and 9 for BellSouth

SEEM Measure

SEEM	Tier I	Tier II
Yes	X	

SEEM Disaggregation - Analog/Benchmark

SEEM Disaggregation	SEEM Analog/Benchmark
• CLEC Trunk Group	Any 2 consecutive hour period in 24 hours where CLEC blockage exceeds BellSouth blockage by more than 0.5% using trunk groups 1, 3, 4, 5, 10, 16 for CLECs and 9 for BellSouth
• BellSouth Trunk Group	

Section 10: Collocation

C-1: Collocation Average Response Time

Definition

Measures the average time (counted in calendar days) from the receipt of a complete and accurate collocation application (including receipt of application fee if required) to the date BellSouth returns a response electronically or in writing. Within the number of calendar days as designated by the Collocation order after having received a bona fide application for physical collocation, BellSouth must respond with space availability and a price quote.

Exclusions

Any application canceled by the CLEC

Business Rules

The clock starts on the date that BellSouth receives a complete and accurate collocation application accompanied by the appropriate application fee if required. The clock stops on the date that BellSouth returns a response. The clock will restart upon receipt of changes to the original application request.

Calculation

Response Time = (a - b)

- a = Request Response Date
- b = Request Submission Date

Average Response Time = (c / d)

- c = Sum of all Response Times
- d = Count of Responses Returned within Reporting Period

Report Structure

- Individual CLEC (alias) aggregate
- Aggregate of all CLECs
- Geographic Scope
  - State

Data Retained

- Report period
- Aggregate data

SQM Disaggregation - Analog/Benchmark

SQM Level of Disaggregation	SQM Analog/Benchmark
State	Virtual - 15 Calendar Days
Virtual-Initial	Physical Caged - 15 Calendar Days
Virtual-Augment	Physical Cageless - 15 Calendar Days
Physical Caged-Initial	
Physical Caged-Augment	
Physical-Cageless-Initial	
Physical Cageless-Augment	

SEEM Measure

SEEM	Tier I	Tier II
No		

SEEM Disaggregation - Analog/Benchmark

SEEM Disaggregation	SEEM Analog/Benchmark
• Not Applicable	Not Applicable

C-2: Collocation Average Arrangement Time

Definition

Measures the average time (counted in calendar days) from receipt of a complete and accurate Bona Fide firm order (including receipt of appropriate fee if required) to the date BellSouth completes the collocation arrangement and notifies the CLEC.

Exclusions

Any Bona Fide firm order canceled by the CLEC

Business Rules

The clock starts on the date that BellSouth receives a complete and accurate Bone Fide firm order accompanied by the appropriate fee. The clock stops on the date that BellSouth completes the collocation arrangement and notifies the CLEC. The cable assignments associated with the specific collocation request will be provided prior to completion of the arrangement.

Calculation

Arrangement Time = (a - b)

- a = Date Collocation Arrangement is Complete
- b = Date Order for Collocation Arrangement Submitted

Average Arrangement Time = (c / d)

- c = Sum of all Arrangement Times
- d = Total Number of Collocation Arrangements Completed during Reporting Period

Report Structure

- Individual CLEC (alias) Aggregate
- Aggregate of all CLECs
- Geographic Scope
  - State

Data Retained

- Report Period
- Aggregate Data

SQM Disaggregation - Analog/Benchmark

SQM Level of Disaggregation	SQM Analog/Benchmark
• State	Virtual - 60 Calendar Days
• Virtual-Initial	Virtual-Augment - 60 Calendar Days (Without Space Increase)
• Virtual-Augment	Virtual-Augment - 60 Calendar Days (With Space Increase)
• Physical Caged-Initial	Physical Caged - 90 Calendar Days (Ordinary)
• Physical Caged-Augment	Physical Caged-Augment - 45 Calendar Days (Without Space Increase)
• Physical Cageless-Initial	Physical Caged-Augment - 90 Calendar Days (With Space Increase)
• Physical Cageless-Augment	Physical Cageless - 90 Calendar Days

Physical Cagedless-Augment - 45 Calendar Days (Without Space Increase)
Physical Cagedless-Augment - 90 Calendar Days (With Space Increase)

SEEM Measure

SEEM	Tier I	Tier II
No		

SEEM Disaggregation - Analog/Benchmark

SEEM Disaggregation	SEEM Analog/Benchmark
• Not Applicable	Not Applicable

C-3: Collocation Percent of Due Dates Missed

Definition

Measures the percent of missed due dates for both virtual and physical collocation arrangements

Exclusions

Any Bona Fide firm order canceled by the CLEC

Business Rules

Percent Due Dates Missed is the percent of total collocation arrangements which BellSouth is unable to complete by end of the BellSouth committed due date. The arrangement is considered a missed due date if it is not completed on or before the committed due date.

Calculation

% of Due Dates Missed = (a / b) X 100

- a = Number of Completed Orders that were not completed by BellSouth Committed Due Date during Reporting Period
- b = Number of Orders Completed in Reporting Period

Report Structure

- Individual CLEC (alias) aggregate
- Aggregate of all CLECs
- Geographic Scope
  - State

Data Retained

- Report Period
- Aggregate Data

SQM Disaggregation - Analog/Benchmark

SQM Level of Disaggregation	SQM Analog/Benchmark
State	>= 95% on time
Virtual-Initial	
Virtual- Augment	
Physical Caged- Initial	
Physical Caged- Augment	
Physical Cageless- Initial	
Physical Cageless- Augment	

SEEM Measure

SEEM	Tier I	Tier II
Yes	X	X

SEEM Disaggregation - Analog/Benchmark

SEEM Disaggregation	SEEM Analog/Benchmark
• All Collocation Arrangements	>= 95% on time

Section 11: Change Management

CM-1: Timeliness of Change Management Notices

Definition

Measures whether CLECs receive required software release notices on time to prepare for BellSouth interface/system changes so CLEC interfaces are not impaired by change.

Exclusions

- Changes to release dates for reasons outside BellSouth control, such as the system software vendor changes. For example: a patch to fix a software problem.
- Type 6 Change Requests (Defects/Expedites), as defined by the Change Control Process (CCP)

Business Rules

This metric is designed to measure the percent of change management notices sent to the CLECs according to notification standards and time frames set forth in the Change Control Process. The CCP is used by BellSouth and the CLECs to manage requested changes to the BellSouth Local Interfaces.

The clock starts on the notification date. The clock stops on the software release date. When project events occur (scope changes, analysis information, etc.), the software release date may change. A revised notification would be required and the clock would restart. Based on release constraints for defects/expedites, notification may be less than the agreed upon interval in the CCP for new features.

Calculation

Timeliness of Change Management Notices = (a / b) X 100

- a = Total number of Change Management Notifications Sent Within Required Time frames
- b = Total Number of Change Management Notifications Sent

Report Structure

- BellSouth Aggregate
- Geographic Scope
  - Region

Data Retained

- Report Period
- Notice Date
- Release Date

SQM Disaggregation - Analog/Benchmark

SQM Level of Disaggregation	SQM Analog/Benchmark
• Region	98% on time

SEEM Measure

SEEM	Tier I	Tier II
Yes		X

SEEM Disaggregation - Analog/Benchmark

SEEM Disaggregation	SEEM Analog/Benchmark
• Region	98% on time

CM-2: Change Management Notice Average Delay Days

Definition

Measures the average delay days for change management system release notices sent outside the time frame set forth in the Change Control Process.

Exclusions

- Changes to release dates for reasons outside BellSouth control, such as the system vendor
- Type 6 Change Requests (Defects/Expedites), as defined by the Change Control Process

Business Rules

This metric is designed to compute the average delay days for change management notices sent to the CLECs outside the time frames set forth in the Change Control Process. The CCP is used by BellSouth and the CLECs to manage requested changes to the BellSouth Local Interfaces.

The clock starts on the notification due date. The clock stops on the software release date. When project events occur (scope changes, analysis information, etc.), the software release date may change. A revised notification would be required and the clock would restart. Based on release constraints for defects/expedites, notification may be less than the agreed upon interval in the CCP for new features

Calculation

Change Management Notice Delay Days = (a - b)

- a = Date Notice Sent
- b = Date Notice Due

Change Management Notice Average Delay Days = (c / d)

- c = Sum of all Change Management Notice Delay Days
- d = Total Number of Notices Sent Late

Report Structure

- BellSouth Aggregate
- Geographic Scope
  - Region

Data Retained

- Report Period
- Notice Date
- Release Date

SQM Disaggregation - Analog/Benchmark

SQM Level of Disaggregation	SQM Analog/Benchmark
• Region	<= 5 Days

SEEM Measure

SEEM	Tier I	Tier II
No		

SEEM Disaggregation - Analog/Benchmark

SEEM Disaggregation	SEEM Analog/Benchmark
• Not Applicable	Not Applicable

CM-3: Timeliness of Documents Associated with Change

Definition

Measures whether CLECs received requirements or business rule documentation on time to prepare for BellSouth interface/system changes so CLEC interfaces are not impaired by change.

Exclusions

- Documentation for release dates that slip less than 30 days for a change mandated by regulatory or legal entities (Federal Communications Commission [FCC], a state commission/authority, or state and federal courts) or CLEC request.
- Type 6 Change Requests (Defects/Expedites), as defined by the Change Control Process.

Business Rules

This metric is designed to measure the percent of requirements or business rule documentation sent to the CLECs according to documentation standards and time frames set forth in the Change Control Process, a copy of which can be found at http://www.interconnection.bellsouth.com/markets/lec/ccp_live/index.html. The CCP is used by BellSouth and the CLECs to manage requested changes to the BellSouth Local Interfaces.

The clock starts on the business rule documentation release date. The clock stops on the software release date. When project events occur (scope changes, analysis information, etc.), the software release date may change. Revisions to documentation could be required and the clock would restart.

Calculation

Timeliness of Documents Associated with Change = (a / b) X 100

- a = Change Management Documentation Sent Within Required Time frames after Notices
- b = Total Number of Change Management Documentation Sent

Report Structure

- BellSouth Aggregate
- Geographic Scope
  - Region

Data Retained

- Report Period
- Notice Date
- Release Date

SQM Disaggregation - Analog/Benchmark

SQM Level of Disaggregation	SQM Analog/Benchmark
• Region	98% on Time

SEEM Measure

SEEM	Tier I	Tier II
Yes		X

SEEM Disaggregation - Analog/Benchmark

SEEM Disaggregation	SEEM Analog/Benchmark
• Region	98% on Time

CM-4: Change Management Documentation Average Delay Days

Definition

Measures the average delay days for requirements or business rule documentation sent outside the time frames set forth in the Change Control Process.

Exclusions

- Documentation for release dates that slip less than 30 days for reasons outside BellSouth control, such as changes due to Regulatory mandate or CLEC request.
- Type 6 Change Requests (Defects/Expedites), as defined by the Change Control Process.

Business Rules

This metric is designed to compute the average delay days for business rule documentation sent to the CLECs outside the time frames set forth in the Change Control Process. The CCP is used by BellSouth and the CLECs to manage requested changes to the BellSouth Local Interfaces.

The clock starts on the business rule documentation release date. The clock stops on the software release date. When project events occur (scope changes, analysis information, etc.), the software release date may change. Revisions to documentation could be required and the clock would restart.

Calculation

Change Management Documentation Delay Days = (a - b)

- a = Date Documentation Provided
- b = Date Documentation Due

Change Management Documentation Average Delay Days = (c / d)

- c = Sum of all CM Documentation Delay Days
- d = Total Change Management Documents Sent

Report Structure

- BellSouth Aggregate
- Geographic Scope
  - Region

Data Retained

- Report Period
- Notice Date
- Release Date

SQM Disaggregation - Analog/Benchmark

SQM Level of Disaggregation	SQM Analog/Benchmark
• Region	<= 5 Days

SEEM Measure

SEEM	Tier I	Tier II
No		

SEEM Disaggregation - Analog/Benchmark

SEEM Disaggregation	SEEM Analog/Benchmark
• Not Applicable	Not Applicable

CM-5: Notification of CLEC Interface Outages

Definition

Measures the time it takes BellSouth to notify the CLEC of an outage of an interface.

Exclusions

None

Business Rules

This metric measures the process of notifying CLECs of an interface outage as defined by the Change Control Process Documentation. BellSouth has 15 minutes to notify the CLECs via email, once the Help Desk has verified the existence of an outage. An outage is verified to exist when on or more of the following conditions occur:

1. BellSouth can duplicate a CLEC reported error.
2. BellSouth finds an error message within the system error log that identifiably matches a CLEC reported outage.
3. When 3 or more CLECs report the identical type of outage.
4. BellSouth detects a problem due to the loss of functionality for users of a system.

Note: The 15 minute clock begins once a CLEC reported or a BellSouth detected outage has lasted for 20 minutes and has been verified. If the outage is not verified within 20 minutes, the clock begins at the point of verification.

This metric will be expressed as a percentage.

Calculation

Notification of CLEC Interface Outages = (a / b) X 100

- a = Number of Interface Outages where CLECs are notified within 15 minutes
- b = Total Number of Interface Outages

Report Structure

- CLEC Aggregate
- Geographic Scope
  - Region

Data Retained

Relating to CLEC Experience

- Number of Interface Outages
- Number of Notifications <= 15 minutes

Relating to BellSouth Performance

- Not Applicable

SQM Disaggregation - Analog/Benchmark

SQM Level of Disaggregation	SQM Analog/Benchmark
• By interface type for all interfaces accessed by CLECs	97% <= 15 Minutes

Interface	Applicable to
EDI	CLEC
CSOTS	CLEC
LENS	CLEC
TAG	CLEC
ECTA	CLEC
TAFI	CLEC/BellSouth

SEEM Measure

SEEM	Tier I	Tier II
No		

SEEM Disaggregation - Analog/Benchmark

SEEM Disaggregation	SEEM Analog/Benchmark
• Not Applicable	Not Applicable

CM-6: Percent of Software Errors Corrected in "X" (10, 30, 45) Business Days

Definition

Measures the percent of all outstanding Software Errors due and overdue to be corrected by BellSouth in "X" (10, 30, 45) business days within the monthly report period.

Exclusions

- Software Corrections having implementation intervals that are longer than those defined in this measure and agreed upon by the CLECs
- Rejected or reclassified software errors (BellSouth must report the number of rejected or reclassified software errors disputed by the CLECs)

Business Rules

This metric is designed to measure BellSouth's performance each month in correcting identified Software Errors within the specified interval. The clock starts when a Software Error validated per the Change Control Process, a copy of which can be found at http://www.interconnection.bellsouth.com/markets/lec/ccp_live/index.html, and stops when the error is corrected and notice posted to the Change Control Website. The monthly report should include all defects due and overdue to be corrected within the report period. Software defects are defined as Type 6 Change Requests in the Change Control Process.

Calculation

Percent of Software Errors Corrected in "X" (10, 30, 45) Business Days = (a / b) X 100

- a = Total number of Software Errors Corrected where "X" = 10, 30, or 45 Business Days.
- b = Total number of Software Errors requiring correction where "X" = 10, 30, or 45 Business Days.

Report Structure

- Severity 2 = 10 Business Days
- Severity 3 = 30 Business Days
- Severity 4 = 45 Business Days

Data Retained

- Report Period
- Total Completed
- Total Completed within "X" Business Days
- Disputed, Rejected or Reclassified Software Errors

SQM Level of Disaggregation - Analog/Benchmark

SQM Level of Disaggregation	SQM Analog/Benchmark
• Region	95% within interval

SEEM Measure

SEEM	Tier I	Tier II
Yes		X

SEEM Disaggregation - Analog/Benchmark

SEEM Disaggregation	SEEM Analog/Benchmark
• Region	95% within interval

CM-7: Percent of Change Requests Accepted or Rejected within 10 Days

Definition

Measures the percent of Change Requests other than Type 1 or Type 6 Change Requests, submitted by CLECs that are Accepted or Rejected by BellSouth in 10 business days within the report period.

Exclusions

- Change Requests that are canceled or withdrawn before a response from BellSouth is due.

Business Rules

The Acceptance/Rejection interval starts when the acknowledgement is due to the CLEC per the Change Control Process, a copy of which can be found at http://www.interconnection.bellsouth.com/markets/lec/ccp_live/index.html. The clock ends when BellSouth issues an acceptance or rejection notice to the CLEC. This metric includes all change requests not subject to the above exclusions, not just those received and accepted or rejected in the reporting period.

Calculation

Percent of Change Requests Accepted or Rejected within 10 Business Days = (a / b) X 100

- a = Total number of Change Requests accepted or rejected within 10 business days
- b = Total number of Change Requests submitted in the reporting period

Report Structure

- BellSouth Aggregate

Data Retained

- Report Period
- Requests Accepted or Rejected
- Total Requests

SQM Level of Disaggregation - Analog/Benchmark

SQM Level of Disaggregation	SQM Analog/Benchmark
• Region	95% within interval

SEEM Measure

SEEM	Tier I	Tier II
Yes		X

SEEM Disaggregation - Analog/Benchmark

SEEM Disaggregation	SEEM Analog/Benchmark
• Region	95% within interval

CM-8: Percent Change Requests Rejected

Definition

Measures the percent of Change Requests (other than Type 1 or Type 6 Change Requests) submitted by CLECs that are rejected by reason within the report period.

Exclusions

- Change Requests that are canceled or withdrawn before a response from BellSouth is due.

Business Rules

This metric includes any rejected change requests in the reporting period, regardless of whether received early or late. The metric will be disaggregated by major categories of rejections per the Change Control Process, a copy of which can be found at http://www.interconnection.bellsouth.com/markets/lec/ccp_live/index.html. These reasons are: Cost, Technical Feasibility, and Industry Direction. This metric includes all change requests not subject to the above exclusions, not just those received and accepted or rejected in the same reporting period.

Calculation

Percent Change Requests Rejected = (a / b) X 100

- a = Total number of Change Requests rejected
- b = Total number of Change Requests submitted within the report period

Report Structure

- BellSouth Aggregate
- Cost
- Technical Feasibility

Data Retained

- Report Period
- Requests Rejected
- Total Requests

SQM Level of Disaggregation - Analog/Benchmark

SQM Level of Disaggregation	SQM Analog/Benchmark
Region	Diagnostic
Reason – Cost	
Reason – Technical Feasibility	
Reason – Industry Direction	

SEEM Measure

SEEM	Tier I	Tier II
No		

SEEM Disaggregation - Analog/Benchmark

SEEM Disaggregation	SEEM Analog/Benchmark
• Not Applicable	Not Applicable

CM-9: Number of Defects in Production Releases (Type 6 CR)

Definition

Measures the number of defects in Production Releases. This measure will be presented as the number of Type 6 Severity 1 defects, the number of Type 6 Severity 2 defects without a mechanized work around, and the number of Type 6 Severity 3 defects resulting within a three week period from a Production Release date. The definition of Type 6 Change Requests (CR) and Severity 1, Severity 2, and Severity 3 defects can be found in the Change Control Process Document.

Exclusions

None

Business Rules

This metric measures the number of Type 6 Severity 1 defects, the number of Type 6 Severity 2 defects without a mechanized work around, and the number of Type 6 Severity 3 defects resulting within a three week period from a Production Release date. The definitions of Type 6 Change Requests (CR) and Severity 1, 2, and 3 defects can be found in the Change Control Process, which can be found at http://www.interconnection.bellsouth.com/markets/lec/ccp_live/index.html.

Calculation

The number of Type 6 Severity 1 Defects, the number of Type 6 Severity 2 Defects without a mechanized work around, and the number of Type 6 Severity 3 defects.

Report Structure

- Production Releases
- Number of Type 6 Severity 1 defects
- Number of Type 6 Severity 2 defects without a mechanized work around
- Number of Type 6 Severity 3 defects

Data Retained

- Region
- Report Period
- Production Releases
- Number of Type 6 Severity 1 defects
- Number of Type 6 Severity 2 defects without a mechanized work around
- Number of Type 6 Severity 3 defects

SQM Level of Disaggregation - Analog/Benchmark

SQM Level of Disaggregation	SQM Analog/Benchmark
Region—Number of Type 6 Severity 1 Defects	0 Defects
Region—Number of Type 6 Severity 2 Defects	0 Defects without a mechanized work around
Region—Number of Type 6 Severity 3 Defects	0 Defects

SEEM Measure

SEEM	Tier I	Tier II
No		

SEEM Disaggregation **SEEM Analog/Benchmark**

- Not Applicable ..... Not Applicable

CM-10: Software Validation

Definition

Measures software validation test results for Production Releases of BellSouth Local Interfaces.

Exclusions

None

Business Rules

BellSouth maintains a test deck of transactions that are used to validate that functionality in software Production Releases work as designed. Each transaction in the test deck is assigned a weight factor, which is based on the weights that have been assigned to the metrics. Within the software validation metric weight factors will be allocated among transaction types (e.g., Pre-Order, Order Resale, Order UNE, Order UNE-P) and then equally distributed across transactions within the specific type.

BellSouth will begin to execute the software validation test deck within one (1) business day following a Production Release. Test deck transactions will be executed using Production Release software in the CAVE environment. Within seven (7) business days following completion of the Production Release software validation test in CAVE, BellSouth will report the number of test deck transactions that failed. Each failed transaction will be multiplied by the transaction's weight factor.

A transaction is considered failed if the request cannot be submitted or processed, or results in incorrect or improperly formatted data.

The test deck scenario weight table can be found in the Change Control Process, a copy of which can be found at http://www.interconnection.bellsouth.com/markets/lec/ccp_live/index.html.

Calculation

This software validation metric is defined as the ratio of the sum of the weights of failed transactions using Production Release software in CAVE to the sum of the weights of all transactions in the test deck.

- Numerator = Sum of weights of failed transactions
- Denominator = Sum of weights of all transactions in the test deck

Report Structure

- BellSouth Aggregate

Data Retained

- Report Period
- Production Release Number
- Test Deck Weights
- % Test Deck Weight Failure

SQM Level of Disaggregation - Analog/Benchmark

SQM Level of Disaggregation	SQM Analog/Benchmark
• Region	<= 5%

SEEM Measure

SEEM	Tier I	Tier II
No		

SEEM Disaggregation	SEEM Analog/Benchmark
• Not Applicable	Not Applicable

CM-11: Percent of Change Requests Implemented within 60 Weeks of Prioritization

Definition

Measures whether BellSouth provides CLECs timely implementation of prioritized change requests.

Exclusions

- Change requests that are implemented later than 60 weeks with the consent of the CLECs
- Change requests for which BellSouth has regulatory authority to exceed the interval

Business Rules

This metric is designed to measure BellSouth's monthly performance in implementing prioritized change requests. The clock starts when a change request has first been prioritized as described in the Change Control Process. The clock stops when the change request has been implemented by BellSouth and made available to the CLECs. BellSouth will begin reporting this monthly measure with the next release for diagnostic purposes, and will be measured for SEEM purposes 60 weeks from first prioritization meeting following Commission approval of this measure.

Calculation

Percent of Type 5 CLEC initiated Change Requests implemented on time = (a / b) X 100

- a = Total number of prioritized Type 5 Change Requests implemented each month that are less than or equal to 60 weeks of age from the date of their first prioritization plus all other prioritized change requests existing at the end of the month that are less than or equal to 60 weeks of age from prioritization.

- b = All entries in "a" above plus all Type 5 Change Requests prioritized more than 60 weeks before the end of the monthly reporting period.

Percent of Type 4 BellSouth initiated Change Requests implemented on time = (a / b) X 100

- a = Total number of prioritized Type 4 Change Requests implemented each month that are less than or equal to 60 weeks of age from the date of the release prioritization list plus all other Type 4 prioritized change requests existing at the end of the month that are less than or equal to 60 weeks of age from prioritization.

- b = All entries in "a" above plus all Type 4 Change Requests prioritized more than 60 weeks before the end of the monthly reporting period.

Report Structure

- BellSouth Aggregate
- Type 4 requests implemented
- Type 5 requests implemented
- % implemented within 16, 32, 48, and 60 weeks

Data Retained

- Region
- Report Month
- Total implemented by type
- Total implemented within 60 weeks

SQM Level of Disaggregation - Analog/Benchmark

SQM Level of Disaggregation	SQM Analog/Benchmark
• Region	95% within interval
• Type 4 requests implemented	95% within interval
• Type 5 requests implemented	95% within interval

SEEM Measure

SEEM	Tier I	Tier II	Tier III
Yes		X	

SEEM Disaggregation	SEEM Analog/Benchmark
• Region	95% within interval

Appendix A: Reporting Scope

A-1: Standard Service Groupings

See individual reports in the body of the SQM.

A-2: Standard Service Order Activities

These are the generic BellSouth/CLEC service order activities which are included in the Pre-Ordering, Ordering, and Provisioning sections of this document. It is not meant to indicate specific reporting categories.

Service Order Activity Types

- Service Migrations Without Changes
- Service Migrations With Changes
- Move and Change Activities
- Service Disconnects (Unless noted otherwise)
- New Service Installations

Pre-Ordering Query Types

- Address
- Telephone Number
- Appointment Scheduling
- Customer Service Record
- Feature Availability
- Service Inquiry

Maintenance Query Types

TAFI - TAFI queries the systems below

- CRIS
- March
- Predictor
- LMOS
  - DLR
  - DLETH
  - LMOSupd
- LNP
- NIW
- OSPCM
- SOCS

Report Levels

- CLEC RESH
- CLEC State
- CLEC Region
- Aggregate CLEC State
- Aggregate CLEC Region
- BellSouth State
- BellSouth Region

Appendix B: Glossary of Acronyms and Terms

Symbols used in calculations

Σ
A mathematical symbol representing the sum of a series of values following the symbol.

-
A mathematical operator representing subtraction.

+
A mathematical operator representing addition.

/
A mathematical operator representing division.

<
A mathematical symbol that indicates the metric on the left of the symbol is less than the metric on the right.

<=
A mathematical symbol that indicates the metric on the left of the symbol is less than or equal to the metric on the right.

>
A mathematical symbol that indicates the metric on the left of the symbol is greater than the metric on the right.

>=
A mathematical symbol that indicates the metric on the left of the symbol is greater than or equal to the metric on the right.

( )
Parentheses, used to group mathematical operations which are completed before operations outside the parentheses.

A

ACD
Automatic Call Distributor - A service that provides status monitoring of agents in a call center and routes high volume incoming telephone calls to available agents while collecting management information on both callers and attendants.

Aggregate
Sum total of all items in like category, e.g. CLEC aggregate equals the sum total of all CLECs' data for a given reporting level.

ALEC
Alternative Local Exchange Company = FL CLEC

ADSL
Asymmetrical Digital Subscriber Line

ASR
Access Service Request - A request for access service terminating delivery of carrier traffic into a Local Exchange Carrier's network.

ATLAS

Application for Telephone Number Load Administration System - The BellSouth Operations System used to administer the pool of available telephone numbers and to reserve selected numbers from the pool for use on pending service requests/service orders.

ATLASTN
ATLAS software contract for Telephone Number.

Auto Clarification
The number of LSRs that were electronically rejected from LESOG and electronically returned to the CLEC for correction.

B

BFR:
Bona Fied Request

BILLING
The process and functions by which billing data is collected and by which account information is processed in order to render accurate and timely billing.

BOCRIS
Business Office Customer Record Information System (Front-end to the CRIS database.)

BRI
Basic Rate ISDN

BRC
Business Repair Center – The BellSouth Business Systems trouble receipt center which serves large business and CLEC customers.

BellSouth
BellSouth Telecommunications, Inc.

C

CABS
Carrier Access Billing System

CCC
Coordinated Customer Conversions

CCP
Change Control Process

Centrex
A business telephone service, offered by local exchange carriers, which is similar to a Private Branch Exchange (PBX) but the switching equipment is located in the telephone company Central Office (CO).

CKTID
A unique identifier for elements combined in a service configuration

CLEC
Competitive Local Exchange Carrier

CLP
Competitive Local Provider = NC CLEC

CM
Change Management

CMDS
Centralized Message Distribution System - Telcordia administered national system used to transfer specially formatted messages among companies.

COFFI
Central Office Feature File Interface - Provides information about USOCs and class of service. COFFI is a part of DOE/SONGS. It indicates all services available to a customer.

CRIS
Customer Record Information System - This system is used to retain customer information and render bills for telecommunications service.

CRSACCTS
CRIS software contract for CSR information

CRSG
Complex Resale Support Group

C-SOTS
CLEC Service Order Tracking System

CSR
Customer Service Record

CTTG
Common Transport Trunk Group - Final trunk groups between BellSouth & Independent end offices and the BellSouth access tandems.

D

DA
Directory Assistance

DESIGN
Design Service is defined as any Special or Plain Old Telephone Service Order which requires BellSouth Design Engineering Activities.

DISPOSITION & CAUSE
Types of trouble conditions, e.g. No Trouble Found, Central Office Equipment, Customer Premises Equipment, etc.

DLETH
Display Lengthy Trouble History - A history report that gives all activity on a line record for trouble reports in LMOS.

DLR
Detail Line Record - A report that gives detailed line record information on records maintained in LMOS

DS-0
The worldwide standard speed for one digital voice signal (64000 bps).

DS-1
24 DS-0s (1.544Mb/sec., i.e. carrier systems)

DOE
Direct Order Entry System - An internal BellSouth service order entry system used by BellSouth Service Representatives to input business service orders in BellSouth format.

DSAP
DOE (Direct Order Entry) Support Application - The BellSouth Operations System which assists a Service Representative or similar carrier agent in negotiating service provisioning commitments for non-designed services and Unbundled Network Elements.

DSAPDDI
DSAP software contract for schedule information.

DSL
Digital Subscriber Line

DUI
Database Update Information

E

E911
Provides callers access to the applicable emergency services bureau by dialing a 3-digit universal telephone number.

EDI
Electronic Data Interchange - The computer-to-computer exchange of inter and/or intra-company business documents in a public standard format.

ESSX
BellSouth Centrex Service

F G

Fatal Reject
The number of LSRs that were electronically rejected from LEO, which checks to see of the LSR has all the required fields correctly populated.

Flow-Through
In the context of this document, LSRs submitted electronically via the CLEC mechanized ordering process that flow through to the BellSouth OSS without manual or human intervention.

FOC
Firm Order Confirmation - A notification returned to the CLEC confirming that the LSR has been received and accepted, including the specified commitment date.

FX
Foreign Exchange

H

HAL
“Hands Off” Assignment Logic - Front end access and error resolution logic used in interfacing BellSouth Operations Systems such as ATLAS, BOCRIS, LMOS, PSIMS, RSAG and SOCS.

HALCRIS
HAL software contract for CSR information

HDSL
High Density Subscriber Loop/Line

I J K

ILEC
Incumbent Local Exchange Company

INP
Interim Number Portability

ISDN
Integrated Services Digital Network

IPC
Interconnection Purchasing Center

L

LAN
Local Area Network

LAUTO
The automatic processor in the LNP Gateway that validates LSRs and issues service orders.

LCSC
Local Carrier Service Center - The BellSouth center which is dedicated to handling CLEC LSRs, ASRs, and Preordering transactions along with associated expedite requests and escalations.

Legacy System
Term used to refer to BellSouth Operations Support Systems (see OSS)

LENS
Local Exchange Negotiation System - The BellSouth LAN/web server/OS application developed to provide both preordering and ordering electronic interface functions for CLECs.

LEO
Local Exchange Ordering - A BellSouth system which accepts the output of EDI, applies edit and formatting checks, and reformats the Local Service Requests in BellSouth Service Order format.

LERG
Local Exchange Routing Guide

LESOG
Local Exchange Service Order Generator - A BellSouth system which accepts the service order output of LEO and enters the Service Order into the Service Order Control System using terminal emulation technology.

LFACS
Loop Facilities Assessment and Control System

LIDB
Line Information Database

LMOS
Loop Maintenance Operations System - A system that provides a mechanized means of maintaining customer line records and for entering, processing, and tracking trouble reports.

LMOS HOST

LMOS host computer

LMOSupd
LMOS update allows trouble tickets on line records to be entered into LMOS.

LMU
Loop Make-up

LMUS
Loop Make-up Service Inquiry

LNP
Local Number Portability - In the context of this document, the capability for a subscriber to retain his current telephone number as he transfers to a different local service provider.

LNP Gateway
Local Number Portability (gateway)- A system that provides both internal and external communications with various interfaces and process including:

(1). Linking BellSouth to the Number Portability Administration Center (NPAC).

(2). Allowing for inter-company communications between BellSouth and the CLECs for electronic ordering.

(3). Providing interface between NPAC and AIN SMS for LNP routing processes.

LOOPS
Transmission paths from the central office to the customer premises.

LRN
Location Routing Number

LSR
Local Service Request – A request for local resale service or unbundled network elements from a CLEC.

M

Maintenance & Repair
The process and function by which trouble reports are passed to BellSouth and by which the related service problems are resolved.

MARCH
A memory administration system that translates line-related service order data into switch provisioning messages and automatically transmits the messages to targeted stored program control system switches.

N

NBR
New Business Request

NC
"No Circuits" - All circuits busy announcement.

NIW
Network Information Warehouse - A system that stores central office blockage data for use in processing trouble reports.

NMLI
Native Mode LAN Interconnection

NPA
Numbering Plan Area

NXX
The "exchange" portion of a telephone number.

O

OASIS
Obtain Availability Services Information System - A BellSouth front-end processor, which acts as an interface between COFFI and RNS. This system takes the USOCs in COFFI and translates them to English for display in RNS.

OASISBSN
OASIS software contract for feature/service

OASISNET
OASIS software contract for feature/service

OASISOCP
OASIS software contract for feature/service

ORDERING
The process and functions by which resale services or unbundled network elements are ordered from BellSouth as well as the process by which an LSR or ASR is placed with BellSouth.

Order Types
The following order types are used in this document:

(1). T - The "to" portion of a change of address. This Order Type is used to connect main service at a new address when a customer moves from one address to another in any of the nine states within the BellSouth region. A "T" Order Type is always pared with an "F" Order Type which will have the same telephone number following the "F" Order Type Code unless the orders are within different states.

(2). N - Orders establishing a new account. Also, this Order Type Code is occasionally used when changing from one type of system to another such as when changing from PBX to Centrex.

(3). C - Order Type used for the following conditions: changes or partial connections or disconnections of service or equipment; change of telephone number, grade or class of main line, additional lines, auxiliary lines, PBX trunks and stations; addition of trunks or lines to existing accounts; move of equipment (other than change of address); temporary suspension and restoration of service at customer's request.

(4). R - Order Type used for the following conditions: additions, removals or changes in directory listings; responsibility change orders, addition, removal or changes in directory and billing information; other record corrections where no "field work" is involved.

OSPCM
Outside Plant Contract Management System - A system that provides scheduling and completion information on outside plant construction activities.

OSS
Operations Support System - A support system or database which is used to mechanize the flow or performance of work. The term is used to refer to the overall system consisting of hardware complex, computer operating system(s), and

application which is used to provide the support functions.

OUT OF SERVICE
Customer has no dial tone and cannot call out.

P Q

PMAP
Performance Measurement Analysis Platform

PON
Purchase Order Number

POTS
Plain Old Telephone Service

PREDICTOR
A system which is used to administer proactive maintenance and rehabilitation activities on outside plant facilities, provide access to selected work groups to Mechanized Loop Testing and switching system I/O ports.

Preordering
The process and functions by which vital information is obtained, verified, or validated prior to placing a service request.

PRI
Primary Rate ISDN

Provisioning
The process and functions by which necessary work is performed to activate a service requested via an LSR or ASR and to initiate the proper billing and accounting functions.

PSIMS
Product/Service Inventory Management System - A BellSouth database Operations System which contains availability information on switching system features and capabilities and on BellSouth service availability. This database is used to verify the availability of a feature or service in an NXX prior to making a commitment to the customer.

PSIMSORB
PSIMS software contract for feature/service.

R

RNS
Regional Negotiation System - An internal BellSouth service order entry system used by BellSouth Consumer Services to input service orders in BellSouth format.

ROS
Regional Ordering System

RRC
Residence Repair Center - The BellSouth Consumer Services trouble receipt center which serves residential customers.

RSAG
Regional Street Address Guide - The BellSouth database, which contains street addresses validated to be accurate with state and local governments.

RSAGADDR
RSAG software contract for address search.

RSAGTN
RSAG software contract for telephone number search.

S

SAC
Service Advocacy Center

SEEM
Self Effectuating Enforcement Mechanism

SOCS
Service Order Control System - A system which routes service order images among BellSouth drop points and BellSouth OSS during the service provisioning process.

SOIR
Service Order Interface Record - any change effecting activity to a customer account by service order that impacts 911/E911

SONGS
Service Order Negotiation and Generation System.

Syntactically Incorrect Query
A query that cannot be fulfilled due to insufficient or incorrect input data from the end user. For example, A CLEC would like to query the legacy system for the following address: 1234 Main ST. Entering "1234 Main ST" will be considered syntactically correct because valid characters were used in the address field. However, entering "AB34 Main ST" will be considered syntactically incorrect because invalid characters (i.e., alpha characters were entered in numeric slots) were used in the address field.

T

TAFI
Trouble Analysis Facilitation Interface - The BellSouth Operations System that supports trouble receipt center personnel in taking and handling customer trouble reports.

TAG
Telecommunications Access Gateway – TAG was designed to provide an electronic interface, or machine-to-machine interface for the bi-directional flow of information between BellSouth's OSSs and participating CLECs.

TN
Telephone Number

Total Manual Fallout
The number of LSRs which are entered electronically but require manual entering into a service order generator.

U V

UNE
Unbundled Network Element

UCL
Unbundled Copper Link

USOC
Universal Service Order Code

W X Y Z

WATS
Wide Area Telephone Service

WFA
Work Force Administration

WMC
Work Management Center

WTN
Working Telephone Number.

Appendix C: BellSouth Audit Policy

C-1: BellSouth's Internal Audit Policy

BellSouth's internal efforts to make certain that the reports produced by the PMAP platform are of the highest accuracy has been formalized into a Performance Measurements Quality Assurance Plan (PMQAP) that documents and augments existing quality assurance processes integral to the production and validation of Performance Measurements data.

The plan consists of three sections:

1. Change Control addresses the quality assurance steps involved in the introduction of new measurements and changes to existing measurements.
2. Production addresses the quality assurance steps used to create monthly SQM reports.
3. Monthly Validation addresses the quality assurance steps used to ensure accurate posting of monthly results.

The BellSouth PMQAP will ensure that BellSouth effectively and consistently provides accurate performance measurements data for the activities included in the SQM. The BellSouth Internal Audit department will audit this plan and its quality assurance steps annually, beginning in 4Q01.

C-2: BellSouth's External Audit Policy

BellSouth currently provides many CLECs with audit rights as a part of their individual interconnection agreements. BellSouth has developed a proposed Audit Plan for use by the parties to an audit. If requested by a Public Service Commission or by a CLEC exercising contractual audit rights, BellSouth will agree to undergo a comprehensive audit of the current year aggregate level reports for both BellSouth and the CLECs for each of the next five (5) years (2001 - 2005), to be conducted by an independent third party auditor jointly selected by BellSouth and the CLEC. The results of audits will be made available to all the parties subject to proper safeguards to protect proprietary information. Requested audits include the following specifications:

1. The cost shall be borne by BellSouth.
2. The independent third party auditor shall be selected with input from BellSouth, the PSC, if applicable, and the CLEC(s).
3. BellSouth, the PSC and the CLECs shall jointly determine the scope of the audit.

These comprehensive audits are intended to provide the basis for the PSCs and CLECs to determine that the SQM, PMAP and SEEM produce accurate data that reflects each States Order for performance measurements. Once this has been verified by an initial audit, the BellSouth PMQAP will provide the basis for future audits.

Appendix D: OSS Tables

OSS-1: Average Response Interval and Percent Within Interval (Pre-Ordering/Ordering)

Table 1: Legacy System Access Times For RNS

System	Contract	Data	< 2.3 sec.	> 6 sec.	<= 6.3 sec.	Avg. Sec.	# of Calls
RSAG	RSAG-TN	Address	x	x	x	x	x
RSAG	RSAG-ADDR	Address	x	x	x	x	x
ATLAS	ATLAS-TN	TN	x	x	x	x	x
DSAP	DSAP-DDI	Schedule	x	x	x	x	x
CRIS	CRSACCTS	CSR	x	x	x	x	x
OASIS	OASISBIG	Feature/Service	x	x	x	x	x

Table 2: Legacy System Access Times For R0S

System	Contract	Data	< 2.3 sec.	> 6 sec.	<= 6.3 sec.	Avg. sec.	# of Calls
RSAG	RSAG-TN	Address	x	x	x	x	x
RSAG	RSAG-ADDR	Address	x	x	x	x	x
ATLAS	ATLAS-TN	TN	x	x	x	x	x
DSAP	DSAP-DDI	Schedule	x	x	x	x	x
CRIS	CRSOCSR	CSR	x	x	x	x	x
OASIS	OASISBIG	Feature/Service	x	x	x	x	x

Table 3: Legacy System Access Times For LENS

System	Contract	Data	< 2.3 sec.	> 6 sec.	<= 6.3 sec.	Avg. sec.	# of Calls
RSAG	RSAG-TN	Address	x	x	x	x	x
RSAG	RSAG-ADDR	Address	x	x	x	x	x
ATLAS	ATLAS-TN	TN	x	x	x	x	x
DSAP	DSAP	Schedule	x	x	x	x	x
CRIS	CRSECSRL	CSR	x	x	x	x	x
COFFI	COFFI/USOC	Feature/Service	x	x	x	x	x
P/SIMS	PSIMS/ORB	Feature/Service	x	x	x	x	x

Table 4: Legacy System Access Times For TAG

System	Contract	Data	< 2.3 sec.	> 6 sec.	<= 6.3 sec.	Avg. sec.	# of Calls
RSAG	RSAG-TN	Address	x	x	x	x	x
RSAG	RSAG-ADDR	Address	x	x	x	x	x
ATLAS	ATLAS-TN	TN	x	x	x	x	x
ATLAS	ATLAS-MLH	TN	x	x	x	x	x
ATLAS	ATLAS-DID	TN	x	x	x	x	x
DSAP	DSAP-DDI	Schedule	x	x	x	x	x
CRIS	TAG-CSR	CSR	x	x	x	x	x
P/SIMS	PSIM/ORB	Feature/Service	x	x	x	x	x

OSS-1: Average Response Interval and Percent Within Interval (Pre-Ordering/Ordering)

SEEM OSS Legacy System

System	BellSouth	CLEC
	Telephone Number/Address	
RSAG-ADDR	RNS, ROS	TAG, LENS
RSAG-TN	RNS, ROS	TAG, LENS
Atlas	RNS,ROS	TAG. LENS
	Appointment Scheduling	
DSAP	RNS, ROS	TAG, LENS
	CSR Data	
CRSACCTS	RNS	
CRSOCSR	ROS	
CRSECSRL		LENS
TAG-CSR		TAG
	Service/Feature Availability	
OASISBIG	RNS, ROS	
PSIMS/ORB, COFFI		LENS, TAG

OSS-2: OSS Availability (Pre-Ordering/Ordering)

OSS Availability

OSS Interface	Applicable to	% Availability
EDI	CLEC	x
LENS	CLEC	x
LEO	CLEC	x
LESOG	CLEC	x
PSIMS	CLEC	x
TAG	CLEC	x
LNP Gateway	CLEC	x
COG	CLEC	x
SOG	CLEC	x

DOM	CLEC	x
DOE	CLEC/BellSouth	x
CRIS	CLEC/BellSouth	x
ATLAS/COFFI	CLEC/BellSouth	x
BOCRIS	CLEC/BellSouth	x
DSAP	CLEC/BellSouth	x
RSAG	CLEC/BellSouth	x
SOCS	CLEC/BellSouth	x
SONGS	CLEC/BellSouth	x
RNS	BellSouth	x
ROS	BellSouth	x

OSS-2: OSS Availability (Pre-Ordering/Ordering)

SEEM OSS Availability

OSS Interface	Applicable to	% Availability
EDI	CLEC	x
LENS	CLEC	x
LEO	CLEC	x
LESOG	CLEC	x
PSIMS	CLEC	x
TAG	CLEC	x
LNP Gateway	CLEC	x
COG	CLEC	x
SOG	CLEC	x
DOM	CLEC	x

OSS-3: OSS Availability (Maintenance & Repair)

OSS Availability (M&R)

OSS Interface	% Availability
BellSouth TAFI	x
CLEC TAFI	x
CLEC ECTA	x
BellSouth & CLEC	
CRIS	x
LMOS HOST	x
LNP Gateway	x
MARCH	x
OSPCM	x
PREDICTOR	x
SOCS	x

OSS-3: OSS Availability (Maintenance & Repair)

SEEM OSS Availability (M&R)

OSS Interface	% Availability
CLEC TAFI	x
CLEC ECTA	x

OSS-4: Response Interval (Maintenance & Repair)

Legacy System Access Times for M&R

System	BellSouth & CLEC	Count <= 4	> 4 <= 10	<= 10	> 10	> 30	Avg. Int.
CRIS	x	x	x	x	x	x	x
DLETH	x	x	x	x	x	x	x
DLR	x	x	x	x	x	x	x
LMOS	x	x	x	x	x	x	x
LMOSupd	x	x	x	x	x	x	x
LNP	x	x	x	x	x	x	x
MARCH	x	x	x	x	x	x	x
OSPCM	x	x	x	x	x	x	x
Predictor	x	x	x	x	x	x	x
SOCS	x	x	x	x	x	x	x
NIW	x	x	x	x	x	x	x

TAFI

System	Open Trouble Ticket	Status Trouble Ticket	Mechanized Line Testing	Close Trouble Ticket
CRIS	x			
DLETH	x			
DLR	x			
LMOS	x	x		x
LMOSSupd	x	x	x	x
LNP	x			
MARCH	x			
OSPCM	x	x		
Predictor	x	x		
SOCS	x	x		
NIW	x			

Note: Depending on the type of customer report multiple systems maybe touched in one transaction.

Product	PRODUCT TYPE	REQTYPE	ACT TYPE	F/T[3]	COMPLEX SERVICE	COMPLEX ORDER	PLANNED FALLOUT FOR MANUAL HANDLING[1]	EDI	TAG[2]	LENS[4]	COMMENTS
2 wire analog DID trunk port	U	F	N	No	UNE	Yes	NA	N	N	N	
2 wire analog port	U	F	N	No	UNE	No	Yes	Y	Y	Y	
2 wire ISDN digital line	U	A	N,T	No	UNE	Yes	NA	N	N	N	
2 wire ISDN digital loop	U	A	N,C,D	Yes	UNE	Yes	No	Y	Y	N	
2 wire ISDN digital loop - LNP	U	B	V,P,Q	Yes	UNE	Yes	No	Y	Y	N	
3 Way Calling	R,B	E,M	N,C,V,W,P,Q,T	Yes	No	No	No	Y	Y	Y	
3rd Party Call Block	R,B	E,M	N,C,V,W,D,P,Q,T	Yes	No	No	No	Y	Y	Y	
4 wire analog voice grade loop	U	A	T	No	UNE	Yes	Yes	Y	Y	N	
4 wire analog voice grade loop	U	A	N	Yes	UNE	Yes	No	Y	Y	N	
4 wire DS1 & PRI digital loop	U	A	N,T	No	UNE	Yes	NA	N	N	N	
4 wire DSO & PRI digital loop	U	A	N,T	No	UNE	Yes	NA	N	N	N	
4 wire ISDN DSI digital trunk ports	U	A	N,T	No	UNE	Yes	NA	N	N	N	
4-WIRE DS1 LOOP WITH CHANNELIZATION WITH PORT DS1	C	M	N,C,D,V	No	Yes	Yes	NA	N	N	N	
4-WIRE DS1 LOOP WITH CHANNELIZATION WITH PORT TRUNK SERVICE	C	M	N,C,D,V	No	Yes	Yes	NA	N	N	N	
900 Call Block	R,B	E,M	N,C,V,W,D,P,Q,T	Yes	No	No	No	Y	Y	Y	
Accupulse	C	E	N,C,T,V,W	No	Yes	Yes	NA	N	N	N	
ADSL	R,B,C	E	V,W,D	Yes	C/S	C/S	No	Y	Y	Y	NOTE THIS PRODUCT CAN BE ORDERED FOR RES/BUS AND CENTREX
Analog Data/Private Line	C	E	N,C,T,V,W,D	No	Yes	Yes	NA	N	N	N	
Area Plus	R,B	E,M	N,C,V,W,P,Q,T	Yes	No	No	No	Y	Y	Y	
ATM (ASYNCHRONOUS TRANFER MODE)	C	E	N,C,V,W,D	No	Yes	Yes	NA	N	N	N	
Basic Rate ISDN *Unbundled	U	A	T	No	Yes	Yes	Yes	Y	Y	N	
Basic Rate ISDN *Unbundled	U	A	N,V,D	Yes	UNE	Yes	No	Y	Y	Y	
Basic Rate ISDN *Unbundled	U	A	C,T	No	UNE	Yes	Yes	Y	Y	Y	
Basic Rate ISDN 2 Wire UNE P	C	M	N,C,D,V	No	Yes	Yes	NA	N	N	N	Manual
Basic Rate ISDN 2 Wire	C	E	N,C, D,T,V,P,Q	No	Yes	Yes	Yes	Y	Y	Y	

Product	PRODUCT TYPE	REQTYPE	ACT TYPE	F/T[3]	COMPLEX SERVICE	COMPLEX ORDER	PLANNED FALLOUT FOR MANUAL HANDLING[1]	EDI	TAG[2]	LENS[4]	COMMENTS
BELLSOUTH CHANNELIZED TRUNKS	C	E	N,C,D,T,V,W,P,Q	No	Yes	Yes	NA	N	N	N	
Call Block	R,B	E,M	N,C,V,W,P,Q,T	Yes	No	No	No	Y	Y	Y	
Call Forwarding	R,B	E,M	N,C,V,W,P,Q,T	Yes	No	No	No	Y	Y	Y	
Call Return	R,B	E,M	N,C,V,W,P,Q,T	Yes	No	No	No	Y	Y	Y	
Call Selector	R,B	E,M	N,C,V,W,P,Q,T	Yes	No	No	No	Y	Y	Y	
Call Tracing	R,B	E,M	N,C,V,W,P,Q,T	Yes	No	No	No	Y	Y	Y	
Call Waiting	R,B	E,M	N,C,V,W,P,Q,T	Yes	No	No	No	Y	Y	Y	
Call Waiting Deluxe	R,B	E,M	N,C,V,W,P,Q,T	Yes	No	No	No	Y	Y	Y	
Caller ID	R,B	E,M	N,C,V,W,P,Q,T	Yes	No	No	No	Y	Y	Y	
BELLSOUTH CENTREX*	C	P	N,C,D,W,T,S,B,L,V,P	No	Yes	Yes	NA	N	N	N	
UNE P CENTREX	C	M	N,C,D,V	No	Yes	Yes	NA	N	N	N	
Collect Call Block	R,B	E,M	N,C,V,W,D,P,Q,T	Yes	No	No	No	Y	Y	Y	
DID	C	N	N,C,D,V,W,T,P,Q	No	Yes	Yes	Yes	Y	Y	Y	
2-WIRE DIRECT INWARD DIAL (DID) TRUNK PORT AND VOICE GRADE LOOP COMBINATION	C	M	N,C,D,V	No	Yes	Yes	NA	N	N	N	
Digital Data Transport	U	E	N,C,T,V,W	No	UNE	Yes	NA	N	N	N	
DIGITAL DIRECT INTEGRATION TERMINATION SERVICES (DDITS) DS1	C	M	N,C,D,V	No	Yes	Yes	NA	N	N	N	
DIGITAL DIRECT INTEGRATION TERMINATION SERVICES (DDITS) TRUNK SERVICE	C	M	N,C,D,V	No	Yes	Yes	NA	N	N	N	
Directory Listing Indentions	B,U	B,C,E,F,J,M,N	N,C,T,R,V,W,P,Q	No	No	No	Yes	Y	Y	Y	
Directory Listings (simple)	R,B,U	B,C,E,F,J,M,N	N,C,R,V,W,P,Q	Yes	No	No	No	Y	Y	Y	
Directory Listings (simple)	R,B,U	B,C,E,F,J,M,N	T	No	No	No	Yes	Y	Y	N	
Directory Listings Captions	R,B,U	B,C,E,F,J,M,N	N,C,T,R,V,W,P,Q	No	No	Yes	Yes	Y	Y	Y	
DIFFERENT PREMISE ADDRESS (DPA)	C	E	N,C,D,V,W,T	No	Yes	Yes	NA	N	N	N	
DS1Loop	U	A	N,D,V	Yes	UNE	Yes	No	Y	Y	Y	
DS3	U	A	N,C,V	No	UNE	Yes	NA	N	N	N	
DSO Loop	U	A	N,D,V	Yes	UNE	Yes	No	Y	Y	Y	
DSO Loop	U	A	C,T	No	No	No	Yes	Y	Y	Y	

Product	PRODUCT TYPE	REQTYPE	ACT TYPE	F/T[3]	COMPLEX SERVICE	COMPLEX ORDER	PLANNED FALLOUT FOR MANUAL HANDLING[1]	EDI	TAG[2]	LENS[4]	COMMENTS
Enhanced Caller ID	R,B	E	C,D,N,V,W,P,Q,T	Yes	No	No	No	Y	Y	Y	
Enhanced Extended Links (EELS)	U	A	C,D,N,T,V	Yes	No	No	No	Y	Y	Y	
ESSX	C	P	C,D,T,V,S,B,W,L,P,Q	No	Yes	Yes	NA	N	N	N	
Flat Rate/Business	B	E, M	C,D,N,V,W,T Y,B,L,S,D,T,P,Q	Yes	No	No	No	Y	Y	Y	
Flat Rate/Residence	R	E, M	C,D,N,V,W,T Y,B,L,S,D,T,P,Q	Yes	No	No	No	Y	Y	Y	
FLEXSERV	C	E	N,C,D,T,V,W,P,Q	No	Yes	Yes	NA	N	N	N	
Frame Relay	C	E	N,C,D,V,W	No	Yes	Yes	NA	N	N	N	
FX/FCO	C	E	N,C,D,T,V,W,P,Q	No	Yes	Yes	NA	N	N	N	
UNE P FX/FCO (RES,BUS,PBX) (NOTE: THIS PRODUCT WILL NOT BE AVAILABLE UNTIL 08--01-02	C	M	N,C,V,D,T,S,B,L,W,Y,P,Q	No	Yes	Yes	NA	N	N	N	
Ga. Community Calling	R,B	M	C,D,N,V,W,P,Q	No	No	No	NA	N	N	N	
Ga. Community Calling	R,B	E	T	No	No	No	Yes	Y	Y	N	
HDSL	U	A	T	No	UNE	No	Yes	Y	Y	N	
HDSL	U	A	N,C,D,V	Yes	UNE	No	No	Y	Y	Y	
Hunting MLH	R,B	E, M	C,D,N,T,V,W	No	C/S[4]	C/S	Yes	Y	Y	N	
Hunting Series Completion	R,B	E, M	C,D,N,V,W	Yes	C/S	C/S	No	Y	Y	Y	
Hunting Series Completion	R,B	E, M	T	No	No	No	Yes	Y	Y	N	
INP to LNP Conversion	U	C	C	No	UNE	Yes	Yes	Y	Y	N	
LightGate	C	E	N,C,D,T,V,W,P,Q	No	Yes	Yes	NA	N	N	N	
Line Sharing	U	A	N,C,D,V,P,Q	Yes	UNE	No	No	Y	Y	Y	
Line Splitting	U	A	N,C,D	Yes	UNE	No	No	Y	Y	Y	
LNP With Complex Listing	U	C	P,V,Q	No	UNE	Yes	Yes	Y	Y	N	
LNP with Complex Services	U	C	P,V,Q	No	UNE	Yes	Yes	Y	Y	N	
LNP with Partial Migration	U	C	P,V,Q	No	UNE	Yes	Yes	Y	Y	N	
LNP	U	C	P,V,Q	Yes	UNE	Yes	No	Y	Y	N	
Local Number Portability (INP to LNP)	U	C	C	No	UNE	No	Yes	Y	Y	N	
INP	U	B,C	D	No	UNE	No	Yes	Y	Y	N	
Loop+LNP	U	B	V,P,Q	Yes	UNE	No	No	Y	Y	N	

Product	PRODUCT TYPE	REQTYPE	ACT TYPE	F/T[3]	COMPLEX SERVICE	COMPLEX ORDER	PLANNED FALLOUT FOR MANUAL HANDLING[1]	EDI	TAG[2]	LENS[4]	COMMENTS
Measured Rate/Bus	R,B	E,M	C,D,N,V,W,P,Q,T Y,B,L,S,D	Yes	No	No	No	Y	Y	Y	
Measured Rate/Res	R,B	E,M	C,D,N,V,W,P,Q,T Y,B,L,S,D	Yes	No	No	No	Y	Y	Y	
Megalink POINT TO POINT	C	E	N,V,W,T,D,C,P,Q	No	Yes	Yes	NA	N	N	N	
Megalink CHANNELIZED	C	E	N,V,W,T,D,C,P,Q	No	Yes	Yes	NA	N	N	N	
Memory Call	R,B	E, M	C,D,N,V,W,P,Q,T	Yes	No	No	No	Y	Y	Y	
Memory Call Ans. Svc.	R,B	E, M	C,D,N,V,W,P,Q,T	Yes	No	No	No	Y	Y	Y	
Multiserv	C	P	N,C,D,T,V,S,B,W,L,P,Q	No	Yes	Yes	NA	N	N	N	
Native Mode LAN Interconnection (NMLI)	C	E	N,C,D,V,W	No	Yes	Yes	NA	N	N	N	
Off-Prem Stations	C	E	N,C,D,V,W,T,P,Q	No	Yes	Yes	NA	N	N	N	
Optional Calling Plan	R,B	E, M	N,V,P,Q,W	Yes	No	No	No	Y	Y	Y	
Package/Complete Choice and Area Plus	R,B	E, M	N,C,V,W,P,Q	Yes	No	No	No	Y	Y	Y	
Package/Complete Choice and Area Plus	R,B	E, M	T	No	No	No	Yes	Y	Y	N	
Pathlink/ Primary Rate ISDN	C	E	N,C,D,T,V,W,P,Q	No	Yes	Yes	NA	N	N	N	
4-WIRE ISDN PRI UNE COMBO	C	M	N,C,D,V	No	Yes	Yes	NA	N	N	N	
Pay Phone Provider	B	E,M	C,D,T,N,V,W,P,Q	Yes	No	No	No	Y	Y	Y	
PBX Standalone Port	C	F	N,C,D	No	Yes	Yes	Yes	Y	Y	N	
PBX Trunks	C	E	N,C,D,V,W,T,P,Q	No	Yes	Yes	Yes	Y	Y	N	
PIC/LPIC Change	R,B,C	E,M	C,V,P,Q,T	Yes	No	No	No	Y	Y	Y	
PIC/LPIC Freeze	R,B,C	E,M	N,C,V,P,Q,T	Yes	No	No	No	Y	Y	Y	
PORT/LOOP COMBO 2-WIRE PBX	C	M	N,C,D,V	No	No	No	Yes	Y	Y	N	
Port/Loop Simple	U	M	N,C,D,V	Yes	No	No	No	Y	Y	Y	
Preferred Call Forward	R,B,U	E,M	C,D,N,V,W,P,Q,T	Yes	No	No	No	Y	Y	Y	
RCF Basic	R,B	E,M	N,D,W,V,P,Q,T	No	No	No	Yes	Y	Y	N	
Remote Access to CF	R,B	E,M	C,D,N,V,W,P,Q,T	No	No	No	NA	Y	Y	N	
Repeat Dialing	R,B	E,M	C,D,N,V,W,P,Q,T	Yes	No	No	No	Y	Y	Y	
Ringmaster	R,B	E,M	C,D,N,V,W,P,Q,T	Yes	No	No	No	Y	Y	Y	
Smartpath	R,B	E	C,D,T,N,V,W	No	Yes	Yes	NA	N	N	N	
SmartRING	C	E	N,D,C,V,W	No	Yes	Yes	NA	N	N	N	

Product	PRODUCT TYPE	REQTYPE	ACT TYPE	F/T[3]	COMPLEX SERVICE	COMPLEX ORDER	PLANNED FALLOUT FOR MANUAL HANDLING[1]	EDI	TAG[2]	LENS[4]	COMMENTS
Speed Calling	R,B	E,M	C,D,N,V,W,P,Q,T	Yes	No	No	No	Y	Y	Y	
Synchronet	C	E	N,D,C,V,W	No	Yes	Yes	Yes	Y	Y	N	
Three Way Call Block	R,B	E,M	C,D,N,V,W,P,Q,T	Yes	No	No	No	Y	Y	N	
Tie Lines	C	E	N,C,D,V,W,T,P,Q	No	Yes	Yes	NA	N	N	N	
TOLL FREE DIALING (TFD)	C	E	N,C,D,V,W	No	Yes	Yes	NA	N	N	N	
Touchtone	R,B	E	C,D,N,V,W,P,Q,T	Yes	No	No	No	Y	Y	Y	
Unbundled Loop-Analog 2W, SL1, SL2	U	A,B	D,N,V	Yes	UNE	No	No	Y	Y	Y	
Unbundled Loop-Analog 2W, SL1,SL2	U	A,B	C **	Yes	UNE	No	Yes	Y	Y	Y	
Unbundled Universal Digital Channel (UDC) Loop	U	A	N,D	Yes	UNE	No	No	Y	Y	Y	
WATS*	C	E	W,D,N,C,V	No	Yes	Yes	NA	N	N	N	
XDSL	U	A,B	N,C,V,D	Yes	UNE	No	No	Y	Y	Y	
XDSL	U	A,B	T	No	No	No	Yes	Y	Y	N	

Product: U-UNE; C-Complex; B-Business; R-Residence

Reqtype: A-Loop; B-Loop with LNP/INP; C-LNP/INP; E-Resale; F-Port; J-Directory Listing and Directory Assistance; M–UNE-P; N-DID Resale; P-Centrex Resale, ACT: N-New installation-; C-Change an existing account; D-Disconnection; T-Outside move of end user location; R-Record activity is for ordering administrative changes; V-Conversion of service to new LSP as specified; W-Conversion of service to new LSP "as is"; S-Suspend; B-Restore; Y-Deny; L-Seasonal Suspend; P-Partial Migration (initial); Q-Partial Migration (subsequent)

Note 1: Planned Fallout for Manual Handling denotes those services that are electronically submitted and are not intended to flow-through due to the complexity of the service.

Note 2: The TAG column includes thse LSRs submitted via Robo TAG.

Note 3: For all services that indicate 'No' for flow-through, the following reasons, in addition to complex services or complex order, also prompt manual handling: Expedites from CLECs, special pricing plans, partial migrations (although conversions-as-is flow through for issue 9 unless migrating the main TN and a new TN must be assigned), class of service invalid in certain states with some TOS e.g. government, or cannot be changed when changing main TN on C activity, pnding order review required (Example: Any pending service order (PSO) not related to current PON, pending service order (PSO) with multiple service orders pending realted to current PON and SUP received), more than 25 business lines and more than 15 loops, CSR inaccuracies such as invalid or missing CSR data in CRIS, Directory listings with Indentions or Captions, , transfer of calls option for CLEC end user – new TN not yet posted to CRIS.

Note 4: Services with C/S in the Complex Service and/or the Complex Order columns can be either complex or simple.

Note 5: The following list of items will not FT:

LSRs with Project or RPON fields populated

**SL1 REQTYP A, ACT C, LNA N, C, or D

**SL2 REQTYP A, ACT C, LNA C

REQTYP B, C, ACT P when migrating main telephone number

REQTYP B, C ACT V with Complex

REQTYP E, M, N and P; ACT = V, LNA = V (LNP to Resale/UNE Switched Combinations)