MFN AGREEMENT

This MFN Agreement ("MFN Agreement"), which shall be filed with and is subject to approval by the State Commission and shall become effective ten (10) days after approval by such Commission ("Effective Date"), is entered into by and between Capital Communications Consultants, Inc. ("CLEC"), a Georgia Corporation on behalf of itself, and BellSouth Telecommunications, LLC d/b/a AT&T Alabama, AT&T Florida, AT&T Georgia, AT&T Kentucky, AT&T Louisiana, AT&T Mississippi, AT&T North Carolina, AT&T South Carolina and AT&T Tennessee, ("AT&T"), (previously referred to as BellSouth Telecommunications, Inc., d/b/a AT&T South Carolina (AT&T)) having an office at 675 W. Peachtree Street, Atlanta, Georgia, 30375, on behalf of itself and its successors and assigns.

WHEREAS, the Telecommunications Act of 1996 (the "Act") was signed into law on February 8, 1996; and

WHEREAS, CLEC has requested that AT&T make available the Interconnection Agreement in its entirety executed between AT&T and tw telecom of south carolina llc dated November 2, 2007 for the State(s) of South Carolina ("Interconnection Agreement").

WHEREAS, pursuant to Section 252(i) of the Act, for purposes of this MFN Agreement, CLEC has adopted the Interconnection Agreement for the State(s) of South Carolina;

NOW, THEREFORE, in consideration of the promises and mutual covenants of this MFN Agreement, CLEC and AT&T hereby agree as follows:

1. AT&T-9STATE shall be defined as the States of Alabama, Florida, Georgia, Kentucky, Louisiana, Mississippi, North Carolina, South Carolina and Tennessee.

2. CLEC and AT&T shall adopt in its entirety the Interconnection Agreement dated November 2, 2007 and any and all amendments to said Interconnection Agreement executed and approved by the appropriate state regulatory commission as of the date of the execution of this MFN Agreement. The Interconnection Agreement and all amendments are attached hereto as Exhibit 1 and incorporated herein by this reference. The adoption of this Interconnection Agreement with amendment(s) consists of the following:

ITEM
Adoption Papers
Signature Page
Exhibit 1 Cover Page
tw telecom of south carolina llc Agreement
Name Change Amendment – Effective August 4, 2008
Notices Change and OSS Update Amendment – Effective January 26, 2010
BellSouth Telecommunications Name Change – Effective October 29, 2011

3. In the event that CLEC consists of two (2) or more separate entities as set forth in the preamble to this MFN Agreement, all such entities shall be jointly and severally liable for the obligations of CLEC under this MFN Agreement.

4. The term of this MFN Agreement shall be from the Effective Date as set forth above and shall expire as set forth in Section 2 of the General Terms and Conditions of the Interconnection Agreement. For the purposes of determining the expiration date of this MFN Agreement, the expiration date shall be December 1, 2012.

5. CLEC shall accept and incorporate any approved amendments to the Interconnection Agreement executed as a result of any final judicial, regulatory, or legislative action.

6. In entering into this MFN Agreement, the Parties acknowledge and agree that neither Party waives, and each Party expressly reserves, any of its rights, remedies or arguments it may have at law or under the intervening law or regulatory

change provisions in this MFN Agreement with respect to any orders, decisions, legislation or proceedings and any remands by the FCC, state utility commission, court, legislature or other governmental body including, without limitation, any such orders, decisions, legislation, proceedings, and remands which were issued, released or became effective prior to the Effective Date of this MFN Agreement, or which the Parties have not yet fully incorporated into this Agreement or which may be the subject of further government review.

7. Every notice, consent or approval of a legal nature, required or permitted by this MFN Agreement shall be in writing and shall be delivered either by hand, by overnight courier or by US mail postage prepaid addressed to:

To AT&T:

Contract Management
ATTN: Notices Manager
311 S. Akard, 9th Floor
Dallas, TX 75202-5398
Facsimile Number: 214-464-2006

With a Copy To:

Business Markets Attorney
Suite 4300
675 W. Peachtree St.
Atlanta, GA 30375

To CLEC:

Bryan Michael
CEO/President
7470 Bartlett Corporate Cove W., Suite 102
Bartlett, TN 38133
Facsimile Number: 855-233-1338

or at such other address as the intended recipient previously shall have designated by written notice to the other Party. Where specifically required, notices shall be by certified or registered mail. Unless otherwise provided in this MFN Agreement, notice by mail shall be effective on the date it is officially recorded as delivered by return receipt or equivalent, and in the absence of such record of delivery, it shall be presumed to have been delivered the fifth day, or next business day after the fifth day, after it was deposited in the mails.

Capital Communications Consultants, Inc.

By: _____

Name: Bryan Michael

Title: CEO / President

Date: 1-27-2012

BellSouth Telecommunications, LLC d/b/a AT&T Alabama, AT&T Florida, AT&T Georgia, AT&T Kentucky, AT&T Louisiana, AT&T Mississippi, AT&T North Carolina, AT&T South Carolina and AT&T Tennessee, by AT&T Services, Inc., its authorized agent

By: _____

Name: Patrick Doherty

Title: Director - Regulatory

Date: 2-3-12

State	Resale OCN	ULEC OCN	CLEC OCN
SOUTH CAROLINA	376G		

Description	ACNA Code(s)
ACNA(s)	YCL

EXHIBIT 1

Customer Name: Time Warner Telecom of South Carolina LLC

Time Warner Telecom of South Carolina LLC (Xspedius) TRRO Compliant Interconnection Agreement	2
Table of Contents	3
General Terms and Conditions	5
Signature Page	25
Att 1 - Resale	26
Att 1 - Resale Discounts & Rates	49
Att 2 - Network Elements and Other Services	50
Att 2 - Network Element Rates - Exhibit A	105
Att 2 - Network Elements Rates - Exhibit B	116
Att 3 - Network Interconnection	118
Att 3 - Local Interconnection Rates - Renegotiated	147
Att 3 - Exhibit F	148
Att 4 - Collocation - Central Office	164
Att 4 - Collocation Rates - Exhibit B	219
Att 4 - Collocation - Remote Office	224
Att 5 - Access to Numbers and Number Portability	262
Att 6 - Ordering	268
Att 7 - Billing	277
Att 8 - Rights of Way	290
Att 9 - Performance Measurements	292
Att 10 - Disaster Recovery Plan	294
Att 11 - BFR and NBR Process	303
tw telecom name change SC	310

Note: This page is not part of the actual signed contract/amendment, but is present for record keeping purposes only.

CLEC Agreement With:

Time Warner Telecom of South Carolina LLC

TABLE OF CONTENTS

General Terms and Conditions

Definitions
1. CLEC Certification
2. Term of the Agreement
3. Nondiscriminatory Access .
4. Court Ordered Requests for Call Detail Records and Other Subscriber Information
5. Liability and Indemnification
6. Intellectual Property Rights and Indemnification
7. Proprietary and Confidential Information
8. Resolution of Disputes
9. Taxes
10. Force Majeure
11. Adoption of Agreements
12. Modification of Agreement
13. Legal Rights
14. Indivisibility
15. Severability
16. Non-Waivers
17. Governing Law
18. Assignments and Transfers
19. Notices
20. Rule of Construction
21. Headings of No Force or Effect
22. Multiple Counterparts
23. Filing of Agreement
24. Compliance with Law
25. Necessary Approvals
26. Good Faith Performance
27. Rates
28. Rate True-Up
29. Survival
30. Entire Agreement
31. Insurance

TABLE OF CONTENTS (cont'd)

Attachment 1 - Resale

Attachment 2 - Network Elements & Other Services

Attachment 3 - Network Interconnection

Attachment 4 - Collocation

Attachment 5 - Access to Numbers and Number Portability

Attachment 6 - Ordering

Attachment 7 - Billing

Attachment 8 - Rights-of-Way

Attachment 9 - Performance Measurements

Attachment 10 – Disaster Recovery Plan

Attachment 11 – BFR & NBR Process

AGREEMENT
GENERAL TERMS AND CONDITIONS

THIS AGREEMENT is made by and between BellSouth Telecommunications, Inc., d/b/a AT&T South Carolina (AT&T), a Georgia corporation, and Time Warner Telecom of South Carolina LLC (TWTC), and shall be effective on the Effective Date, as defined herein. This Agreement may refer to either AT&T or TWTC or both as a "Party" or "Parties."

W I T N E S S E T H

WHEREAS, AT&T is a local exchange telecommunications company authorized to provide Telecommunications Services (as defined below) in the state of South Carolina; and

WHEREAS, TWTC is or seeks to become a CLEC authorized to provide telecommunications services in the state of South Carolina; and

WHEREAS, pursuant to Sections 251 and 252 of the Act; TWTC wishes to purchase certain services from AT&T; and

WHEREAS, Parties wish to interconnect their facilities, exchange traffic, and perform Local Number Portability (LNP) pursuant to Sections 251 and 252 of the Act as set forth herein; and

NOW THEREFORE, in consideration of the mutual agreements contained herein, AT&T and TWTC agree as follows:

Definitions

Affiliate is defined as a person that (directly or indirectly) owns or controls, is owned or controlled by, or is under common ownership or control with, another person. For purposes of this paragraph, the term "own" means to own an equity interest (or equivalent thereof) of more than ten percent (10%).

Commission is defined as the appropriate regulatory agency in each state of AT&T's nine-state region (Alabama, Florida, Georgia, Kentucky, Louisiana, Mississippi, North Carolina, South Carolina, and Tennessee).

Competitive Local Exchange Carrier (CLEC) means a telephone company authorized and certificated by the Commission to provide local exchange service within AT&T's service area.

Effective Date is defined as the date that the Agreement is effective for purposes of rates, terms and conditions and shall be thirty (30) days after the date of the last signature executing the Agreement. Future amendments for rate changes will also

be effective thirty (30) days after the date of the last signature executing the amendment unless stated otherwise in the amendment.

End User means the ultimate user of the Telecommunications Service.

FCC means the Federal Communications Commission.

Telecommunications means the transmission, between or among points specified by the user, of information of the user's choosing, without change in the form or content of the information as sent and received.

Telecommunications Service means the offering of telecommunications for a fee directly to the public, or to such classes of users as to be effectively available directly to the public, regardless of the facilities used.

Telecommunications Act of 1996 (Act) means Public Law 104-104 of the United States Congress effective February 8, 1996. The Act amended the Communications Act of 1934 (47 U.S.C. Section 1 et. seq.).

1. CLEC Certification

1.1 TWTC agrees to provide AT&T in writing TWTC's CLEC certification for all states covered by this Agreement except Kentucky prior to AT&T filing this Agreement with the appropriate Commission for approval.

1.2 To the extent TWTC is not certified as a CLEC in each state covered by this Agreement as of the execution hereof, TWTC may not purchase services hereunder in that state. TWTC will notify AT&T in writing and provide CLEC certification when it becomes certified to operate in any other state covered by this Agreement and upon receipt thereof, TWTC may thereafter purchase services pursuant to this Agreement in that state. AT&T will file this Agreement with the appropriate Commission for approval.

1.3 Should TWTC's certification in any state be rescinded or otherwise terminated, AT&T may, at its election, terminate this Agreement immediately and all monies owed on all outstanding invoices shall become due, and AT&T may refuse to provide services hereunder in that state until certification is reinstated in that state, provided such notification is made prior to expiration of the initial term of this Agreement. TWTC shall provide an effective certification to do business issued by the secretary of state or equivalent authority in each state covered by this Agreement.

2. Term of the Agreement

2.1 The initial term of this Agreement shall be five years, beginning on the Effective Date and shall apply to the AT&T territory in the state of South Carolina.

Notwithstanding any prior agreement of the Parties, the rates, terms and conditions of this Agreement shall not be applied retroactively prior to the Effective Date.

2.2 The Parties agree that by no earlier than two hundred seventy (270) days and no later than one hundred and eighty (180) days prior to the expiration of the initial term of this Agreement, they shall commence negotiations for a new agreement to be effective beginning on the expiration date of this Agreement (Subsequent Agreement). If as of the expiration of the initial term of this Agreement, a Subsequent Agreement has not been executed by the Parties, then except as set forth in Sections 2.3.1 and 2.3.2 below, this Agreement shall continue on a month-to-month basis while a Subsequent Agreement is being negotiated. The Parties' rights and obligations with respect to this Agreement after expiration of the initial term shall be as set forth in Section 2.3 below.

2.3 If, within one hundred and thirty-five (135) days of commencing the negotiation referred to in Section 2.2 above, the Parties are unable to negotiate new terms, conditions and prices for a Subsequent Agreement, either Party may petition the Commission to establish appropriate rates, terms and conditions for the Subsequent Agreement pursuant to 47 U.S.C. 252.

2.3.1 TWTC may request termination of this Agreement only if it is no longer purchasing services pursuant to this Agreement. Except as set forth in Section 2.3.2 below, notwithstanding the foregoing, in the event that as of the date of expiration of the initial term of this Agreement and conversion of this Agreement to a month-to-month term, the Parties have not entered into a Subsequent Agreement and no arbitration proceeding has been filed in accordance with 2.3 above, then AT&T may terminate this Agreement upon sixty (60) days notice to TWTC. In the event that AT&T terminates this Agreement as provided above, AT&T shall continue to offer services to TWTC pursuant to the rates, terms and conditions set forth in AT&T's then current standard interconnection agreement. In the event that AT&T's standard interconnection agreement becomes effective between the Parties, the Parties shall continue to negotiate a Subsequent Agreement.

2.3.2 Notwithstanding Section 2.3 above, in the event that as of the expiration of the initial term of this Agreement the Parties have not entered into a Subsequent Agreement and no arbitration proceeding has been filed in accordance with Section 2.2 above and AT&T is not providing any services under this Agreement as of the date of expiration of the initial term of this Agreement, then this Agreement shall not continue on a month to month basis but shall be deemed terminated as of the expiration date hereof.

2.4 In addition to as otherwise set forth in this Agreement, each Party reserves the right to suspend access to ordering systems, refuse to process additional or pending applications for service, or terminate service in the event of prohibited, unlawful or improper use of its facilities or service, abuse of its facilities or any

other material breach of this Agreement, and all monies owed on all outstanding invoices shall become due, only after notice and thirty (30) days right to cure.

2.5 If, at any time during the term of this Agreement, AT&T is unable to contact TWTC pursuant to the Notices provision hereof or any other contact information provided by TWTC under this Agreement, and there are no active services being provisioned under this Agreement, then AT&T may, at its discretion, terminate this Agreement, without any liability whatsoever, upon sending of notification to TWTC pursuant to the Notices section hereof.

3. Nondiscriminatory Access

When TWTC purchases Telecommunications Services from AT&T pursuant to Attachment 1 of this Agreement for the purposes of resale to End Users, such services shall be equal in quality, subject to the same conditions, and provided within the same provisioning time intervals that AT&T provides to others, including its End Users. To the extent technically feasible, the quality of a Network Element, as well as the quality of the access to such Network Element provided by AT&T to TWTC shall be at least equal to that which AT&T provides to itself and shall be the same for all Telecommunications carriers requesting access to that Network Element. The quality of the interconnection between the network of AT&T and the network of TWTC shall be at a level that is equal to that which AT&T provides itself, a subsidiary, an Affiliate, or any other party. The interconnection facilities shall be designed to meet the same technical criteria and service standards that are used within AT&T's network and shall extend to a consideration of service quality as perceived by AT&T's End Users and service quality as perceived by TWTC.

4 Court Ordered Requests for Call Detail Records and Other Subscriber Information

4.1 Subpoenas Directed to AT&T. Where AT&T provides resold services for TWTC, or, if applicable under this Agreement, switching, AT&T shall respond to subpoenas and court ordered requests delivered directly to AT&T for the purpose of providing call detail records when the targeted telephone numbers belong to TWTC End Users. Billing for such requests will be generated by AT&T and directed to the law enforcement agency initiating the request. AT&T shall maintain such information for TWTC End Users for the same length of time it maintains such information for its own End Users.

4.2 Subpoenas Directed to TWTC. Where AT&T is providing resold services to TWTC, or, if applicable under this Agreement, switching, then TWTC agrees that in those cases where TWTC receives subpoenas or court ordered requests regarding targeted telephone numbers belonging to TWTC End Users, and where TWTC does not have the requested information, TWTC will advise the law

enforcement agency initiating the request to redirect the subpoena or court ordered request to AT&T for handling in accordance with 4.1 above.

4.3 In all other instances, where either Party receives a request for information involving the other Party's End User, the Party receiving the request will advise the law enforcement agency initiating the request to redirect such request to the other Party.

5 Liability and Indemnification

5.1 TWTC Liability. In the event that TWTC consists of two (2) or more separate entities as set forth in this Agreement and/or any Amendments hereto, or any third party places orders under this Agreement using TWTC's company codes or identifiers, all such entities shall be jointly and severally liable for the obligations of TWTC under this Agreement.

5.2 Liability for Acts or Omissions of Third Parties. AT&T shall not be liable to TWTC for any act or omission of another entity providing any services to TWTC.

5.3 Limitation of Liability. Except for any indemnification obligations of the Parties hereunder, each Party's liability to the other for any loss, cost, claim, injury, liability or expense, including reasonable attorneys' fees relating to or arising out of any cause whatsoever, whether based in contract, negligence or other tort, strict liability or otherwise, relating to the performance of this Agreement, shall not exceed a credit for the actual cost of the services or functions not performed or improperly performed. Any amounts paid to TWTC pursuant to Attachment 9 hereof shall be credited against any damages otherwise payable to TWTC pursuant to this Agreement.

5.3.1 Limitations in Tariffs. A Party may, in its sole discretion, provide in its tariffs and contracts with its End Users and third parties that relate to any service, product or function provided or contemplated under this Agreement, that to the maximum extent permitted by Applicable Law, such Party shall not be liable to the End User or third party for (i) any loss relating to or arising out of this Agreement, whether in contract, tort or otherwise, that exceeds the amount such Party would have charged that applicable person for the service, product or function that gave rise to such loss and (ii) consequential damages. To the extent that a Party elects not to place in its tariffs or contracts such limitations of liability, and the other Party incurs a loss as a result thereof, such Party shall, except to the extent caused by the other Party's gross negligence or willful misconduct, indemnify and reimburse the other Party for that portion of the loss that would have been limited had the first Party included in its tariffs and contracts the limitations of liability that such other Party included in its own tariffs at the time of such loss.

5.3.2 Neither AT&T nor TWTC shall be liable for damages to the other Party's terminal location, equipment or End User premises resulting from the furnishing of a service, including, but not limited to, the installation and removal of equipment or

associated wiring, except to the extent caused by a Party's negligence or willful misconduct or by a Party's failure to ground properly a local loop after disconnection.

5.3.3 Under no circumstance shall a Party be responsible or liable for indirect, incidental, or consequential damages, including, but not limited to, economic loss or lost business or profits, damages arising from the use or performance of equipment or software, or the loss of use of software or equipment, or accessories attached thereto, delay, error, or loss of data. In connection with this limitation of liability, each Party recognizes that the other Party may, from time to time, provide advice, make recommendations, or supply other analyses related to the services or facilities described in this Agreement, and, while each Party shall use diligent efforts in this regard, the Parties acknowledge and agree that this limitation of liability shall apply to provision of such advice, recommendations, and analyses.

5.3.4 To the extent any specific provision of this Agreement purports to impose liability, or limitation of liability, on either Party different from or in conflict with the liability or limitation of liability set forth in this Section, then with respect to any facts or circumstances covered by such specific provisions, the liability or limitation of liability contained in such specific provision shall apply.

5.4 Indemnification for Certain Claims. Except to the extent caused by the indemnified Party's gross negligence or willful misconduct, the Party providing services hereunder, its Affiliates and its parent company, shall be indemnified, defended and held harmless by the Party receiving services hereunder against any claim, loss or damage arising from the receiving Party's use of the services provided under this Agreement pertaining to (1) claims for libel, slander or invasion of privacy arising from the content of the receiving Party's own communications, or (2) any claim, loss or damage claimed by the End User of the Party receiving services arising from such company's use or reliance on the providing Party's services, actions, duties, or obligations arising out of this Agreement.

5.5 Disclaimer. EXCEPT AS SPECIFICALLY PROVIDED TO THE CONTRARY IN THIS AGREEMENT, NEITHER PARTY MAKES ANY REPRESENTATIONS OR WARRANTIES TO THE OTHER PARTY CONCERNING THE SPECIFIC QUALITY OF ANY SERVICES, OR FACILITIES PROVIDED UNDER THIS AGREEMENT. THE PARTIES DISCLAIM, WITHOUT LIMITATION, ANY WARRANTY OR GUARANTEE OF MERCHANTABILITY OR FITNESS FOR A PARTICULAR PURPOSE, ARISING FROM COURSE OF PERFORMANCE, COURSE OF DEALING, OR FROM USAGES OF TRADE.

6 Intellectual Property Rights and Indemnification

6.1 No License. Except as expressly set forth in Section 6.2, no patent, copyright, trademark or other proprietary right is licensed, granted or otherwise transferred

by this Agreement. The Parties are strictly prohibited from any use, including but not limited to, in the selling, marketing, promoting or advertising of telecommunications services, of any name, service mark, logo or trademark (collectively, the "Marks") of the other Party. The Marks include those Marks owned directly by a Party or its Affiliate(s) and those Marks that a Party has a legal and valid license to use. The Parties acknowledge that they are separate and distinct and that each provides a separate and distinct service and agree that neither Party may, expressly or impliedly, state, advertise or market that it is or offers the same service as the other Party or engage in any other activity that may result in a likelihood of confusion between its own service and the service of the other Party.

6.2 Ownership of Intellectual Property. Any intellectual property that originates from or is developed by a Party shall remain the exclusive property of that Party. Except for a limited, non-assignable, non-exclusive, non-transferable license to use patents or copyrights to the extent necessary for the Parties to use any facilities or equipment (including software) or to receive any service solely as provided under this Agreement, no license in patent, copyright, trademark or trade secret, or other proprietary or intellectual property right, now or hereafter owned, controlled or licensable by a Party, is granted to the other Party. Neither shall it be implied nor arise by estoppel. Any trademark, copyright or other proprietary notices appearing in association with the use of any facilities or equipment (including software) shall remain on the documentation, material, product, service, equipment or software. It is the responsibility of each Party to ensure at no additional cost to the other Party that it has obtained any necessary licenses in relation to intellectual property of third Parties used in its network that may be required to enable the other Party to use any facilities or equipment (including software), to receive any service, or to perform its respective obligations under this Agreement.

6.3 Intellectual Property Remedies

6.3.1 Indemnification. The Party providing a service pursuant to this Agreement will indemnify, defend and hold harmless the Party receiving such service or data provided as a result of such service against claims of infringement arising solely from the use by the receiving Party of such service in the manner contemplated under this Agreement and will indemnify and defend the receiving Party for any damages awarded based solely on such claims in accordance with Section 5 preceding.

6.3.2 Claim of Infringement. In the event that use of any facilities or equipment (including software), becomes, or in the reasonable judgment of the Party who owns the affected network is likely to become, the subject of a claim, action, suit, or proceeding based on intellectual property infringement, then said Party, promptly and at its sole expense and sole option, but subject to the limitations of liability set forth below, shall:

6.3.2.1 modify or replace the applicable facilities or equipment (including software) while maintaining form and function, or

6.3.2.2 obtain a license sufficient to allow such use to continue.

6.3.2.3 In the event Section 6.3.2.1 or 6.3.2.2 are commercially unreasonable, then said Party may terminate, upon reasonable notice, this contract with respect to use of, or services provided through use of, the affected facilities or equipment (including software), but solely to the extent required to avoid the infringement claim. The termination of a particular service under this Section does not relieve the Party of its obligation to provide any other service required under the Act, the regulations thereunder or by the Commission.

6.3.3 Exception to Obligations. Neither Party's obligations under this Section shall apply to the extent the infringement is caused by: (i) modification of the facilities or equipment (including software) by the indemnitee; (ii) use by the indemnitee of the facilities or equipment (including software) in combination with equipment or facilities (including software) not provided or authorized by the indemnitor, provided the facilities or equipment (including software) would not be infringing if used alone; (iii) conformance to specifications of the indemnitee which would necessarily result in infringement; or (iv) continued use by the indemnitee of the affected facilities or equipment (including software) after being placed on notice to discontinue use as set forth herein.

6.3.4 Exclusive Remedy. The foregoing shall constitute the Parties' sole and exclusive remedies and obligations with respect to a third party claim of intellectual property infringement arising out of the conduct of business under this Agreement.

6.3.5 Dispute Resolution. Any claim arising under Section 6.1 and 6.2 shall be excluded from the dispute resolution procedures set forth in Section 8 and shall be brought in a court of competent jurisdiction.

7 Proprietary and Confidential Information

7.1 Proprietary and Confidential Information. It may be necessary for AT&T and TWTC, each as the “Discloser,” to provide to the other Party, as “Recipient,” certain proprietary and confidential information (including trade secret information) including but not limited to technical, financial, marketing, staffing and business plans and information, strategic information, proposals, request for proposals, specifications, drawings, maps, prices, costs, costing methodologies, procedures, processes, business systems, software programs, techniques, customer account data, call detail records and like information (collectively the “Information”). All such Information conveyed in writing or other tangible form shall be clearly marked with a confidential or proprietary legend. Information conveyed orally by the Discloser to Recipient shall be designated as proprietary and confidential at the time of such oral conveyance, shall be reduced to writing by the Discloser within thirty (30) days thereafter, and shall be clearly marked with a confidential or proprietary legend.

7.2 Use and Protection of Information. Recipient agrees to protect such Information of the Discloser provided to Recipient from whatever source from distribution, disclosure or dissemination to anyone except employees of Recipient with a need to know such Information solely in conjunction with Recipient's analysis of the Information and for no other purpose except as authorized herein or as otherwise authorized in writing by the Discloser. Recipient will not make any copies of the Information inspected by it.

7.3 Exceptions. Recipient will not have an obligation to protect any portion of the Information which:

7.3.1 (a) is made publicly available by the Discloser or lawfully by a nonparty to this Agreement; (b) is lawfully obtained by Recipient from any source other than Discloser; (c) is previously known to Recipient without an obligation to keep it confidential; or (d) is released from the terms of this Agreement by Discloser upon written notice to Recipient.

7.4 Recipient agrees to use the Information solely for the purposes of negotiations pursuant to 47 U.S.C. 251 or in performing its obligations under this Agreement and for no other entity or purpose, except as may be otherwise agreed to in writing by the Parties. Nothing herein shall prohibit Recipient from providing information requested by the FCC or a state regulatory agency with jurisdiction over this matter, or to support a request for arbitration or an allegation of failure to negotiate in good faith, or where required by law, regulation, court order or otherwise legally compelled (e.g., by the FCC or a Commission) provided that Recipient provides Discloser with prompt notice of such requirement and cooperates in good faith in ensuring proper confidential protection for such disclosure.

7.5 Recipient agrees not to publish or use the Information for any advertising, sales or marketing promotions, press releases, or publicity matters that refer either directly or indirectly to the Information or to the Discloser or any of its affiliated companies.

7.6 The disclosure of Information neither grants nor implies any license to the Recipient under any trademark, patent, copyright, application or other intellectual property right that is now or may hereafter be owned by the Discloser.

7.7 Survival of Confidentiality Obligations. The Parties' rights and obligations under this Section 7 shall survive and continue in effect until two (2) years after the expiration or termination date of this Agreement with regard to all Information exchanged during the term of this Agreement. Thereafter, the Parties' rights and obligations hereunder survive and continue in effect with respect to any Information that is a trade secret under applicable law.

8 Resolution of Disputes

Except as otherwise stated in this Agreement, if any dispute arises as to the interpretation of any provision of this Agreement or as to the proper implementation of this Agreement, the aggrieved Party, if it elects to pursue resolution of the dispute, shall petition the Commission for a resolution of the dispute. Each Party reserves any rights it may have to seek judicial review of any ruling made by the Commission concerning this Agreement.

9 Taxes

9.1 Definition. For purposes of this Section, the terms "taxes" and "fees" shall include but not be limited to federal, state or local sales, use, excise, gross receipts or other taxes or tax-like fees of whatever nature and however designated (including tariff surcharges and any fees, charges or other payments, contractual or otherwise, for the use of public streets or rights of way, whether designated as franchise fees or otherwise) imposed, or sought to be imposed, on or with respect to the services furnished hereunder or measured by the charges or payments therefore, excluding any taxes levied on or tariff surcharge in lieu of income.

9.2 Taxes and Fees Imposed Directly On Either Providing Party or Purchasing Party. Taxes and fees imposed on the providing Party, which are not permitted or required to be passed on by the providing Party to its customer, shall be borne and paid by the providing Party.

9.2.1 Taxes and fees imposed on the purchasing Party, which are not required to be collected and/or remitted by the providing Party, shall be borne and paid by the purchasing Party.

9.3 Taxes and Fees Imposed on Purchasing Party But Collected And Remitted By Providing Party. Taxes and fees imposed on the purchasing Party shall be borne by the purchasing Party, even if the obligation to collect and/or remit such taxes or fees is placed on the providing Party.

9.3.1 To the extent permitted by applicable law, any such taxes and/or fees shall be shown on applicable billing documents between the Parties. If the providing Party fails to bill any tax or fee as required herein, then, as between the providing Party and the purchasing Party, the purchasing Party shall remain liable for such uncollected tax or fee, subject to the back billing provisions but based on the statute of limitations for assessment and collection of such tax or fee against the providing Party, including any extensions thereof. The Providing Party shall be liable for any penalty and interest assessed with respect to such uncollected tax or fee by such authority unless the purchasing Party had instructed the providing Party not to bill such tax or fee, in which case the purchasing Party shall be liable for such tax or fee, penalty and interest. If the purchasing Party fails to pay any such tax or fee properly billed, then, as between the providing Party and the purchasing Party, the purchasing Party will be solely responsible for payment of the tax or fee and penalties and interest.

9.3.2 If the purchasing Party determines that in its opinion any such taxes or fees are not payable, the providing Party shall not bill such taxes or fees to the purchasing Party if the purchasing Party provides written certification, reasonably satisfactory to the providing Party, stating that it is exempt or otherwise not subject to the tax or fee, setting forth the basis therefore, and satisfying any other requirements under applicable law. If any authority seeks to collect any such tax or fee that the purchasing Party has determined and certified not to be payable, or any such tax or fee that was not billed by the providing Party, the purchasing Party may contest the same in good faith, at its own expense.

9.3.3 In the event that all or any portion of an amount sought to be collected must be paid in order to contest the imposition of any such tax or fee, or to avoid the existence of a lien on the assets of the providing Party during the pendency of such contest, the purchasing Party shall be responsible for such payment and shall be entitled to the benefit of any refund or recovery.

9.3.4 Notwithstanding any provision to the contrary, the purchasing Party shall protect, indemnify and hold harmless (and defend at the purchasing Party's expense) the providing Party from and against any such tax or fee, interest or penalties thereon, or other charges or payable expenses (including reasonable attorney fees) with respect thereto, which are incurred by the providing Party in connection with any claim for or contest of any such tax or fee where such claim or contest was initiated by the purchasing Party.

9.3.5 Each Party shall notify the other Party in writing of any assessment, proposed assessment or other claim for any additional amount of such a tax or fee by a taxing authority; such notice to be provided, if possible, at least ten (10) days prior to the date by which a response, protest or other appeal must be filed, but in no event later than thirty (30) days after receipt of such assessment, proposed assessment or claim.

9.4 Taxes and Fees Imposed on Providing Party But Passed On To Purchasing Party. Taxes and fees imposed on the providing Party, which are permitted or required to be passed on by the providing Party to its customer, shall be borne by the purchasing Party.

9.4.1 To the extent permitted by applicable law, any such taxes and/or fees shall be shown on applicable billing documents between the Parties. If the providing Party fails to bill any tax or fee as required herein, then, as between the providing Party and the purchasing Party, the purchasing Party shall remain liable for such uncollected tax or fee subject to the back billing provisions but based on the statute of limitations for assessment and collection of such tax or fee against the providing Party, including any extensions thereof. The providing Party shall be liable for any penalty and interest assessed with respect to such uncollected tax or fee by such authority unless the purchasing Party had instructed the providing Party not to bill such tax or fee, in which case the purchasing Party shall be liable for such tax or fee, penalty and interest. If purchasing Party fails to pay any such

tax or fee properly billed, then, as between the providing Party and the purchasing Party, the purchasing Party will be solely responsible for payment of the tax or fee and penalties and interest.

9.4.2 If the purchasing Party disagrees with the providing Party's determination as to the application or basis for any such tax or fee, the Parties shall consult with respect to the imposition and billing of such tax or fee. Notwithstanding the foregoing, the providing Party shall retain ultimate responsibility for determining whether and to what extent any such taxes or fees are applicable, and the purchasing Party shall abide by such determination and pay such taxes or fees to the providing Party. The purchasing Party shall further retain ultimate responsibility for determining whether and how to contest the imposition of such taxes and fees; provided, however, that any such contest undertaken at the request of the purchasing Party shall be at the purchasing Party's expense.

9.4.3 In the event that all or any portion of an amount sought to be collected must be paid in order to contest the imposition of any such tax or fee, or to avoid the existence of a lien on the assets of the providing Party during the pendency of such contest, the purchasing Party shall be responsible for such payment and shall be entitled to the benefit of any refund or recovery.

9.4.4 Notwithstanding any provision to the contrary, the purchasing Party shall protect, indemnify and hold harmless (and defend at the purchasing Party's expense) the providing Party from and against any such tax or fee, interest or penalties thereon, or other reasonable charges or payable expenses (including reasonable attorneys' fees) with respect thereto, which are incurred by the providing Party in connection with any claim for or contest of any such tax or fee where such claim or contest was initiated by the purchasing Party.

9.4.5 Each Party shall notify the other Party in writing of any assessment, proposed assessment or other claim for any additional amount of such a tax or fee by a taxing authority; such notice to be provided, if possible, at least ten (10) days prior to the date by which a response, protest or other appeal must be filed, but in no event later than thirty (30) days after receipt of such assessment, proposed assessment or claim.

9.5 Mutual Cooperation. In any contest of a tax or fee by one Party, the other Party shall cooperate fully by providing records, testimony and such additional information or assistance as may reasonably be necessary to pursue the contest. Further, the other Party shall be reimbursed for any reasonable and necessary out-of-pocket copying and travel expenses incurred in assisting in such contest.

10 Force Majeure

In the event performance of this Agreement, or any obligation hereunder, is either directly or indirectly prevented, restricted, or interfered with by reason of fire, flood, earthquake or like acts of God, wars, revolution, civil commotion, explosion, acts of public enemy, embargo, acts of the government in its sovereign

capacity, labor difficulties, including without limitation, strikes, slowdowns, picketing, or boycotts, unavailability of equipment from any contracted vendor changes requested by TWTC, or any other circumstances beyond the reasonable control and without the fault or negligence of the Party affected, the Party affected, upon giving prompt notice to the other Party, shall be excused from such performance on a day-to-day basis to the extent of such prevention, restriction, or interference (and the other Party shall likewise be excused from performance of its obligations on a day-to-day basis until the delay, restriction or interference has ceased); provided, however, that the Party so affected shall use diligent efforts to avoid or remove such causes of non-performance and both Parties shall proceed whenever such causes are removed or cease.

11 Adoption of Agreements

Pursuant to 47 USC § 252(i) and 47 C.F.R. § 51.809, AT&T shall make available to TWTC any entire interconnection agreement filed and approved pursuant to 47 USC § 252. The adopted agreement shall apply only to the same states as the agreement that was adopted, and the term of the adopted agreement shall expire on the same date as set forth in the agreement that was adopted.

12 Modification of Agreement

12.1 If a Party changes its name or makes changes to its company structure or identity due to a merger, acquisition, transfer or any other reason, it is the responsibility of the Party to notify the other Party of said change, request that an amendment to this Agreement, if necessary, be executed to reflect said change and notify the appropriate state commission of such modification of company structure in accordance with the state rules governing such modification in company structure if applicable. Additionally, the Party shall provide the other Party with any necessary supporting documentation.

12.2 No modification, amendment, supplement to, or waiver of the Agreement or any of its provisions shall be effective and binding upon the Parties unless it is made in writing and duly signed by the Parties.

12.3 In the event that any effective legislative, regulatory, judicial or other legal action materially affects any material terms of this Agreement, or the ability of TWTC or AT&T to perform any material terms of this Agreement, TWTC or AT&T may, on thirty (30) days' written notice, require that such terms be renegotiated, and the Parties shall renegotiate in good faith such mutually acceptable new terms as may be required. In the event that such new terms are not renegotiated within forty five (45) days after such notice, and either Party elects to pursue resolution of such amendment such Party shall pursue the Dispute Resolution procedure set forth in this Agreement.

13 Legal Rights

Execution of this Agreement by either Party does not confirm or imply that the executing Party agrees with any decision(s) issued pursuant to the Telecommunications Act of 1996 and the consequences of those decisions on specific language in this Agreement. Neither Party waives its rights to appeal or otherwise challenge any such decision(s) and each Party reserves all of its rights to pursue any and all legal and/or equitable remedies, including appeals of any such decision(s).

14 Indivisibility

Subject to Section 15 below, the Parties intend that this Agreement be indivisible and nonseverable, and each of the Parties acknowledges that it has assented to all of the covenants and promises in this Agreement as a single whole and that all of such covenants and promises, taken as a whole, constitute the essence of the contract. Without limiting the generality of the foregoing, each of the Parties acknowledges that any provision by AT&T of collocation space under this Agreement is solely for the purpose of facilitating the provision of other services under this Agreement as set forth in Attachment 4. The Parties further acknowledge that this Agreement is intended to constitute a single transaction and that the obligations of the Parties under this Agreement are interdependent.

15 Severability

If any provision of this Agreement, or part thereof, shall be held invalid or unenforceable in any respect, the remainder of the Agreement or provision shall not be affected thereby, provided that the Parties shall negotiate in good faith to reformulate such invalid provision, or part thereof, or related provision, to reflect as closely as possible the original intent of the parties, consistent with applicable law, and to effectuate such portions thereof as may be valid without defeating the intent of such provision. In the event the Parties are unable to mutually negotiate such replacement language, either Party may elect to pursue the dispute resolution process set forth in Section 8.

16 Non-Waivers

A failure or delay of either Party to enforce any of the provisions hereof, to exercise any option which is herein provided, or to require performance of any of the provisions hereof shall in no way be construed to be a waiver of such provisions or options, and each Party, notwithstanding such failure, shall have the right thereafter to insist upon the performance of any and all of the provisions of this Agreement.

17 Governing Law

Where applicable, this Agreement shall be governed by and construed in accordance with federal and state substantive telecommunications law, including rules and regulations of the FCC and appropriate Commission. In all other respects, this Agreement shall be governed by and construed and enforced in

accordance with the laws of the state in which the services are provided without regard to its conflict of laws principles.

18 Assignments and Transfers

18.1 Neither Party shall assign or transfer any right, obligation, or duty, or any other interest hereunder, in whole or in part, without first obtaining the prior written consent of the other Party, which shall not be unreasonably withheld, conditioned, or delayed. A proposed assignee or transferee must provide evidence of a Commission approved certification to provide Telecommunications Service in each state as required by applicable state law. Following issuance of the written consent, the Parties shall amend this Agreement to reflect such assignments or transfer and shall work cooperatively to implement any changes required due to such assignment or transfer. All rights, obligations and duties of any Party to this Agreement shall be binding upon and inure to the benefit of all successors in interest and assigns of such Party. No assignment, delegation, or subcontract shall relieve the assignor or transferor of any obligations which accrued prior to an assignment or transfer. Notwithstanding any provision to the contrary in this Section 18, a Party shall not be permitted to assign or transfer this Agreement, in whole or in part, to any other entity unless the assigning or transferring Party (1) pays all undisputed past due and current undisputed amounts outstanding on all bills incurred pursuant to the terms of this Agreement, and the assignee or transferee expressly assumes liability for any amounts disputed pursuant to Section 2.1 of Attachment 7, or (2) the assignee or transferee expressly assumes liability for payment of all such amounts.

19 Notices

19.1 With the exception of certain billing notices, governed by Attachment 7, every notice, consent or approval of a legal nature, required or permitted by this Agreement shall be in writing and shall be delivered either by hand, by overnight courier or by certified US mail postage prepaid, and email if an email address is listed below**,** addressed to:

BellSouth Telecommunications, Inc.

AT&T Local Service Specialist
600 North 19th Street, 10th floor
Birmingham, AL 35203

and

Business Markets Attorney
Suite 4300
675 West Peachtree Street
Atlanta, GA 30375

Time Warner Telecom Holdings, Inc.

Tina Davis, Sr. Vice President and Deputy General Counsel
Time Warner Telecom
10475 Park Meadow Drive
Littleton, CO 80124
Tina.Davis@twtelecom.com

Carolyn Ridley, Vice President Regulatory, Southeast
Time Warner Telecom
555 Church Street; Suite 2300
Nashville, TN 37069
Carolyn.Ridley@twtelecom.com

or at such other address as the intended recipient previously shall have designated by written notice to the other Party.

19.2 Unless otherwise provided in this Agreement, notice sent by U.S. mail without a return receipt requested shall be presumed to have been delivered on the fifth day, or if the fifth day is a holiday, Sunday, or other day on which the U.S. Postal Office does not officially deliver mail, then on the next business day after the fifth day, after it was deposited in the mail.

19.3 Notwithstanding the above, and subject to 30.2 below, AT&T will post to AT&T's Interconnection Web site changes to business processes and policies and shall post to AT&T's Interconnection Web site or submit through applicable electronic systems, other service and business related notices not requiring an amendment to this Agreement.

20 Rule of Construction

No rule of construction requiring interpretation against the drafting Party hereof shall apply in the interpretation of this Agreement.

21 Headings of No Force or Effect

The headings of Articles and Sections of this Agreement are for convenience of reference only, and shall in no way define, modify or restrict the meaning or interpretation of the terms or provisions of this Agreement.

22 Multiple Counterparts

This Agreement may be executed in multiple counterparts, each of which shall be deemed an original, but all of which shall together constitute but one and the same document.

23 Filing of Agreement

This Agreement, and amendments hereto, shall be filed with the appropriate state regulatory agency pursuant to the requirements of Section 252 of the Act, or as otherwise required by the state and the Parties shall share equally in any applicable fees. Notwithstanding the foregoing, this Agreement shall not be submitted for approval by the appropriate state regulatory agency unless and until such time as TWTC is duly certified as a local exchange carrier in such state, except as otherwise required by a Commission.

24 Compliance with Law

Each Party shall comply with this Agreement and all effective laws, government regulations applicable to each Parties performance of its obligations under this Agreement at its own expense.

25 Necessary Approvals

Each Party shall be responsible for obtaining and keeping in effect all approvals from, and rights granted by, governmental authorities, building and property owners, other carriers, and any other persons that may be required in connection with the performance of its obligations under this Agreement. Each Party shall reasonably cooperate with the other Party in obtaining and maintaining any required approvals and rights for which such Party is responsible.

26 Good Faith Performance

Each Party shall act in good faith in its performance under this Agreement and, in each case in which a Party's consent or agreement is required or requested hereunder, such Party shall not unreasonably withhold or delay such consent or agreement.

27 Rates

27.1 The Parties shall pay the charges set forth in this Agreement. In the event that the billing Party is unable to bill the applicable rate for any services provided pursuant to this Agreement, the billing Party reserves the right to back bill the other Party for such rate or for the difference between the rate actually billed and the rate that should have been billed pursuant to this Agreement, but not to exceed one (1) year. However, both Parties recognize that specific situations exist which may necessitate billing beyond one (1) year which shall be exceptions to the one (1) year limitation period. These exceptions are:

27.1.1 Charges connected with jointly provided services whereby meet point billing guidelines require either party to rely on records provided by a third party and such

records have not been provided in a timely manner (in which case the charges based on such records must be billed promptly upon receipt of the records, but in no case more than one year from the date of receipt of the records needed to bill jointly provided services);

27.1.2 Charges incorrectly billed due to erroneous information supplied by the non-billing Party, not to exceed two (2) years except in the case of fraud: and

27.1.3 Charges for which a regulatory body has granted, or a regulatory change permits, the billing Party the authority to back bill.

27.2 To the extent a rate element is not established in this Agreement, a Party has the right not to provision such new or additional service until the Agreement is amended to include a rate for such service.

27.3 To the extent the Party requests services not included in this Agreement, such services shall be provisioned pursuant to the rates, terms and conditions set forth in the applicable tariffs or a separately negotiated Agreement**.**

28 Rate True-Up

28.1 This section applies to rates that are expressly ordered in a final and effective order of the Commission as subject to true-up.

28.2 The rates shall be trued-up, either up or down, based on final prices determined either by further agreement between the Parties, or by a final and effective order of the Commission. The Parties shall implement the true-up by comparing the actual volumes and demand for each item, together with the rates for each item, with the final prices determined for each item. Each Party shall keep its own records upon which the true-up can be based, and any final payment from one Party to the other shall be in an amount agreed upon by the Parties based on such records. In the event of any discrepancy between the records or disagreement between the Parties regarding the amount of such true-up, the dispute shall be subject to the dispute resolution process set forth in this Agreement.

28.3 A final and effective order of the Commission that forms the basis of a true-up shall be based upon cost studies submitted by either or both Parties to the Commission and shall be binding upon AT&T and TWTC specifically or upon all carriers generally, such as a generic cost proceeding.

29 Survival

The Parties' obligations under this Agreement which by their nature are intended to continue beyond the termination or expiration of this Agreement shall survive the termination or expiration of this Agreement.

30 Entire Agreement

30.1 This Agreement means the General Terms and Conditions, the Attachments hereto and all documents identified therein, as such may be amended from time to time and which are incorporated herein by reference, all of which, when taken together, are intended to constitute one indivisible agreement. This Agreement sets forth the entire understanding and supersedes prior agreements between the Parties relating to the subject matter contained in this Agreement and merges all prior discussions between them. Any orders placed under prior agreements between the Parties shall be governed by the terms of this Agreement and TWTC acknowledges and agrees that any and all amounts and obligations owed for services provisioned or orders placed under prior agreements between the Parties, related to the subject matter hereof, shall be due and owing under this Agreement and be governed by the terms and conditions of this Agreement as if such services or orders were provisioned or placed under this Agreement, unless the terms of this Agreement make performance impossible or increases the liability of or costs to TWTC. Neither Party shall be bound by any definition, condition, provision, representation, warranty, covenant or promise other than as expressly stated in this Agreement or as is contemporaneously or subsequently set forth in writing and executed by a duly authorized officer or representative of the Party to be bound thereby.

30.2 **Guides**

30.2.1 The Parties acknowledge that certain provisions of this Agreement reference certain AT&T documents and publications (collectively referred to herein as the "Guides"). All Guides referred to in this Agreement, are incorporated herein and made a part hereof by reference. To the extent that there is a conflict between a provision of a Guide and a provision of this Agreement, the provision of this Agreement shall prevail. AT&T may, from time to time during the term hereof, change or alter said Guides (including replacing a Guide entirely with a successor Guide with a different name). The Parties agree that if the change or alteration was made to AT&T's OSS interface Guides as a result of the Change Control Process (CCP), results from a revision to a generally accepted and implemented industry standard or guideline (e.g. Ordering Billing Forum (OBF), Telcordia guidelines, etc.), or other legal requirement directly affecting the Guides provided, if such legal requirement would be subject to the change of law provision in these General Terms and Conditions, the change to the Guide would not be applicable until this Agreement is amended to reflect the update to the Guide, or if TWTC agrees to such change or alteration, any such change or alteration shall become effective as specified in the terms of the notice to TWTC via the applicable Internet website posting. In all other cases, a change in a Guide which (1) alters, amends or conflicts with any term of this Agreement; (2) changes any charge or rate, or the application of any charge or rate, specified in this Agreement; (3) adds a new rate or rate element not previously specified in the Agreement; (4) causes TWTC to incur material cost or expense to implement the change or alteration; or (5) increases an interval set forth in this agreement, will not be effective with respect to TWTC until AT&T and TWTC sign an amendment to this Agreement reflecting the changes described in items (1), (2), (3) or (5); or unless TWTC fails to inform AT&T in writing that it does not agree to such change or alteration within forty-

five (45) days of notice of such change being given to TWTC for item (4). For purposes of item (4), a cost or expense shall be deemed material if it imposes a financial burden on TWTC, but shall not include costs associated with disseminating notice of the change or providing training regarding the change to employees. In addition, AT&T will use its best efforts, upon TWTC's request to AT&T's Web site group at clecmail@att.com, to provide such notices via e-mail to the address specified by TWTC.

30.2.2 In the event that the Parties disagree as to whether any alteration or amendment described in this Section is effective as to TWTC pursuant to the requirements of this Section, either Party may, at its option, seek resolution of the dispute in accordance with the Dispute Resolution provisions in the General Terms and Conditions of this Agreement. In cases where there is a dispute with respect to any alteration or amendment described in this Section becoming effective as to TWTC, such alteration or amendment described in this Section shall not become effective as to TWTC until there is mutual agreement between the Parties that it should become effective or an order resulting from the Dispute Resolution process finding in favor of its becoming effective.

30.3 In various provisions of this Agreement, the Parties have included references to tariffs filed by the Parties; provided, however, that in any state where certain AT&T services or tariff provisions have been or become deregulated or detariffed, any reference in this Agreement to a detariffed or deregulated service or provision of such tariff shall be deemed to refer to the service description, price list or other agreement pursuant to which AT&T provides such services as a result of detariffing or deregulation. If such tariff is referenced for the purposes of a service that is provisioned pursuant to such tariff, and there is a conflict between such referenced tariff provisions and this Agreement, the terms of the tariff shall control. If the service is provisioned pursuant to this Agreement but the tariff is referenced for a rate, an interval or another purpose, to the extent that there is a conflict between such referenced tariff provision and this Agreement, and except as otherwise set forth in this Agreement, the terms of this Agreement shall prevail.

31 Insurance

Each Party will maintain any insurance, self-insurance or bonds with coverages and in amounts as similar telecommunications companies and as to comply with federal and local laws.

BellSouth Telecommunications, Inc.
d/b/a AT&T South Carolina

By: Kristen E. Shore

Name: Kristen E. Shore

Title: Director

Date: 11/2/07

Time Warner Telecom of South Carolina LLC
By: Time Warner Telecom Holdings Inc.,
its sole member

By: Tina Davis

Name: Tina Davis

Title: Senior Vice President
Deputy General Counsel

Date: 11·1·07

FACILITIES-BASED OCN # 174B, 7178, 7280, 7273

ACNA AVS, ICG, LUW, TIM, TDL, XPC

Attachment 1

Resale

Table of Contents

1. Discount Rates 3

2. Definition of Terms 3

3. General Provisions 3

4. AT&T's Provision of Services to TWTC 8

5. Maintenance of Services 9

6. Establishment of Service 9

7. Discontinuance of Service 10

8 White Pages Listings 10

9. Operator Services (Operator Call Processing and Directory Assistance) 12

10 Branding for Wholesale Operator Call Processing and Directory Assistance 14

11. Line Information Database (LIDB) 15

12. RAO Hosting 16

13. Optional Daily Usage File (ODUF) 16

14. Enhanced Optional Daily Usage File (EODUF) 16

Resale Restrictions ..... Exhibit A

Optional Daily Usage File (ODUF) ..... Exhibit B

Enhanced Option Daily Usage File (EODUF) ..... Exhibit C

Resale Discounts and Rates ..... Exhibit D

RESALE

1. Discount Rates

1.1 The discount rates applied to TWTC purchases of BellSouth Telecommunications Services for the purpose of resale shall be as set forth in Exhibit D. Such discounts have been determined by the applicable Commission to reflect the costs avoided by AT&T when selling a service for wholesale purposes.

1.2 The telecommunications services available for purchase by TWTC for the purposes of resale to TWTC's End Users shall be available at AT&T's tariffed rates less the discount set forth in Exhibit D to this Agreement and subject to the exclusions and limitations set forth in Exhibit A to this Agreement.

2. Definition of Terms

2.1 COMPETITIVE LOCAL EXCHANGE COMPANY (CLEC) means a telephone company certificated by the Commission to provide local exchange service within AT&T's franchised area.

2.2 CUSTOMER OF RECORD means the entity responsible for placing application for service; requesting additions, rearrangements, maintenance or discontinuance of service; payment in full of charges incurred such as non-recurring, monthly recurring, toll, directory assistance, etc.

2.3 DEPOSIT means assurance provided by a customer in the form of cash, surety bond or bank letter of credit to be held by AT&T.

2.4 END USER means the ultimate user of the Telecommunications Service.

2.5 END USER CUSTOMER LOCATION means the physical location of the premises where an End User makes use of the telecommunications services.

2.6 NEW SERVICES means functions, features or capabilities that are not currently offered by AT&T. This includes packaging of existing services or combining a new function, feature or capability with an existing service.

2.7 RESALE means an activity wherein a certificated CLEC, such as TWTC, subscribes to the telecommunications services of AT&T and then offers those telecommunications services to the public.

3. General Provisions

3.1 All of the negotiated rates, terms and conditions set forth in this Attachment pertain to the resale of AT&T's retail telecommunications services and other

services specified in this Attachment. Subject to effective and applicable FCC and Commission rules and orders, AT&T shall make available to TWTC for resale those telecommunications services AT&T makes available, pursuant to its General Subscriber Services Tariff and Private Line Services Tariff, to customers who are not telecommunications carriers.

3.1.1 When TWTC provides Resale service in a cross boundary area (areas that are part of the local serving area of another state's exchange) the rates, regulations and discounts for the tariffing state will apply. Billing will be from the serving state.

3.1.2 In Tennessee, if TWTC does not resell Lifeline service to any End Users, and if TWTC agrees to order an appropriate Operator Services/Directory Assistance block as set forth in AT&T's General Subscriber Services Tariff, the discount shall be 21.56%.

3.1.2.1 In the event TWTC resells Lifeline service to any End User in Tennessee, AT&T will begin applying the 16% discount rate to all services. Upon TWTC and AT&T's implementation of a billing arrangement whereby a separate Master Account (Q-account) associated with a separate Operating Customer Number (OCN) is established for billing of Lifeline service End Users, the discount shall be applied as set forth in 3.1.2 preceding for the non-Lifeline affected Master Account (Q-account).

3.1.2.2 TWTC must provide written notification to AT&T within 30 days prior to either providing its own operator services/ directory services or orders the appropriate operator services/directory assistance blocking, to qualify for the higher discount rate of 21.56%.

3.2 TWTC may purchase resale services from AT&T for its own use in operating its business. The resale discount will apply to those services under the following conditions:

3.2.1 TWTC must resell services to other End Users.

3.2.2 TWTC cannot be a competitive local exchange telecommunications company for the single purpose of selling to itself.

3.3 TWTC will be the customer of record for all services purchased from AT&T. Except as specified herein, AT&T will take orders from, bill and receive payment from TWTC for said services.

3.4 TWTC will be AT&T's single point of contact for all services purchased pursuant to this Agreement. AT&T shall have no contact with the End User except to the extent provided for herein. Each Party shall provide to the other a nation wide (50 states) toll-free contact number for purposes of repair and maintenance.

3.5 AT&T will continue to bill the End User for any services that the End User specifies it wishes to receive directly from AT&T. AT&T maintains the right to serve directly any End User within the service area of TWTC. AT&T will continue to market directly its own telecommunications products and services according to any applicable state and federal statutes and rules and in doing so may establish independent relationships with End Users of TWTC. Neither Party shall interfere with the right of any person or entity to obtain service directly from the other Party.

3.5.1 When an End User of TWTC or AT&T elects to change his/her carrier to the other Party, both Parties agree to release the End User's service to the other Party concurrent with the due date of the service order, which shall be established based on the standard interval for the End User's requested service as set forth in the AT&T Product and Services Interval Guide.

3.5.2 AT&T and TWTC will refrain from contacting an End User who has placed or whose selected carrier has placed on the End User's behalf an order to change the End User's service provider from AT&T or TWTC to the other Party until such time that the order for service has been completed.

3.6 Current telephone numbers may normally be retained by the End User and are assigned to the service furnished. However, neither Party nor the End User has a property right to the telephone number or any other call number designation associated with services furnished by AT&T, and no right to the continuance of service through any particular central office. AT&T reserves the right to change such numbers, or the central office designation associated with such numbers, or both, in accordance with the FCC's Notices of Network Change rules on a nondiscriminatory basis.

3.7 Where AT&T provides resold services to TWTC, AT&T will provide TWTC with on-line access to intermediate telephone numbers as defined by applicable FCC rules and regulations on a first come first served basis. TWTC acknowledges that such access to numbers shall be in accordance with the appropriate FCC rules and regulations. TWTC acknowledges that there may be instances where there is a shortage of telephone numbers in a particular Common Language Location Identifier Code (CLLIC); and in such instances, TWTC shall return unused intermediate telephone numbers to AT&T upon AT&T's request. AT&T shall make all such requests on a nondiscriminatory basis.

3.8 AT&T will allow TWTC to designate up to 100 intermediate telephone numbers per CLLIC, for TWTC's sole use. Assignment, reservation and use of telephone numbers shall be governed by applicable FCC rules and regulations. TWTC acknowledges that there may be instances where there is a shortage of telephone numbers in a particular CLLIC and AT&T has the right to limit access to blocks of intermediate telephone numbers. These instances include: 1) where jeopardy status has been declared by the North American Numbering Plan (NANP) for a

particular Numbering Plan Area (NPA); or 2) where a rate center has less than six months supply of numbering resources.

3.9 Service is furnished subject to the condition that it will not be used for any unlawful purpose.

3.10 Service will be discontinued if any law enforcement agency advises that the service being used is in violation of the law.

3.11 AT&T can refuse service when it has reasonable grounds to believe that service will be used in violation of the law.

3.12 AT&T will cooperate with law enforcement agencies with subpoenas and court orders relating to TWTC's End Users, pursuant to Section 4 of the General Terms and Conditions.

3.13 If TWTC or its End Users utilize a AT&T resold telecommunications service in a manner other than that for which the service was originally intended as described in AT&T's retail tariffs, TWTC has the responsibility to notify AT&T. AT&T will only provision and maintain said service consistent with the terms and conditions of the tariff describing said service.

3.14 Facilities and/or equipment utilized by AT&T to provide service to TWTC remain the property of AT&T.

3.15 White page directory listings for TWTC End Users will be provided in accordance with Section 8 below.

3.16 Service Ordering and Operations Support Systems (OSS)

3.16.1 TWTC must order services through resale interfaces, i.e., the Local Carrier Service Center (LCSC) and/or appropriate Complex Resale Support Group (CRSG) pursuant to this Agreement. AT&T has developed and made available the interactive interfaces by which TWTC may submit a Local Service Request (LSR) electronically as set forth in Attachment 6 of this Agreement. Service orders will be in a standard format designated by AT&T.

3.16.2 LSRs submitted by means of one of these interactive interfaces will incur an OSS electronic charge as set forth in Exhibit D of this Attachment. An individual LSR will be identified for billing purposes by its Purchase Order Number (PON). LSRs submitted by means other than one of these interactive interfaces (Mail, fax, courier, etc.) will incur a manual order charge as set forth in Exhibit D of this Attachment. Supplements or clarifications to a previously billed LSR will not incur another OSS charge.

3.16.3 Denial/Restoral OSS Charge. In the event TWTC provides a list of customers to be denied and restored, rather than an LSR, each location on the list will require a separate PON and therefore will be billed as one LSR per location.

3.16.4 Cancellation OSS Charge. TWTC will incur an OSS charge for an accepted LSR that is later canceled.

3.17 Where available to AT&T's End Users, AT&T shall provide the following telecommunications services at a discount to allow for voice mail services**:**

- Message Waiting Indicator ("MWI"), stutter dialtone and message waiting light feature capabilities
- Call Forward Busy Line ("CF/B")
- Call Forward Don't Answer ("CF/DA")

Further, AT&T messaging services set forth in AT&T's Messaging Service Information Package shall be made available for resale without the wholesale discount.

3.18 AT&T shall provide branding for, or shall unbrand, voice mail services for TWTC per the Bona Fide Request/New Business Request process as set forth in Attachment 11 of this Agreement.

3.19 AT&T's Inside Wire Maintenance Service Plan is available for resale at rates, terms and conditions as set forth by AT&T and without the wholesale discount.

3.20 In the event TWTC acquires an End User whose service is provided pursuant to a AT&T Special Assembly, AT&T shall make available to TWTC that Special Assembly at the wholesale discount at TWTC's option. TWTC shall be responsible for all terms and conditions of such Special Assembly including but not limited to termination liability if applicable.

3.21 AT&T shall provide 911/E911 for TWTC customers in the same manner that it is provided to AT&T customers. AT&T shall provide and validate TWTC customer information to the PSAP. AT&T shall use its service order process to update and maintain, on the same schedule that it uses for its customers, the TWTC customer service information in the ALI/DMS (Automatic Location Identification/Location Information) databases used to support 911/E911 services.

3.22 AT&T shall bill, and TWTC shall pay, the End User line charge associated with implementing Number Portability as set forth in AT&T's FCC No. 1 tariff. This charge is not subject to the wholesale discount.

3.23 Pursuant to 47 CFR Section 51.617, AT&T shall bill to TWTC, and TWTC shall pay, the End User common line charges identical to the End User common line charges AT&T bills its End Users.

4. AT&T's Provision of Services to TWTC

4.1 Resale of AT&T services shall be as follows:

4.1.1 The resale of telecommunications services shall be limited to users and uses conforming to the class of service restrictions.

4.1.2 Hotel and Hospital PBX services are the only telecommunications services available for resale to Hotel/Motel and Hospital End Users, respectively. Similarly, Access Line Service for Customer Provided Coin Telephones is the only local service available for resale to Payphone Service Provider (PSP) customers. Shared Tenant Service customers can only be sold those local exchange access services available in AT&T's A23 Shared Tenant Service Tariff in the states of Florida, Georgia, North Carolina and South Carolina, and in A27 in the states of Alabama, Kentucky, Louisiana, Mississippi and Tennessee.

4.1.3 AT&T reserves the right to periodically audit services purchased by TWTC to establish authenticity of use. Such audit shall not occur more than once in a calendar year. TWTC shall make any and all records and data available to AT&T or AT&T's auditors on a reasonable basis. AT&T shall bear the cost of said audit. Any information provided by TWTC for purposes of such audit shall be deemed Confidential Information pursuant to the General Terms and Conditions of this Agreement.

4.2 Subject to Exhibit A hereto, resold services can only be used in the same manner as specified in AT&T's Tariffs. Resold services are subject to the same terms and conditions as are specified for such services when furnished to an individual End User of AT&T in the appropriate section of AT&T's Tariffs. Specific tariff features (e.g. a usage allowance per month) shall not be aggregated across multiple resold services.

4.3 TWTC may resell services only within the specific service area as defined in its certificate of operation approved by the Commission.

4.4 If TWTC cancels an order for resold services, any costs incurred by AT&T in conjunction with provisioning of such order will be recovered in accordance with AT&T's General Subscriber Services Tariffs and Private Line Services Tariffs.

4.5 <u>Service Jointly Provisioned with an Independent Company or Competitive Local Exchange Company Areas.</u> AT&T will in some instances provision resold services in accordance with the General Subscriber Services Tariff and Private Line Tariffs

jointly with an Independent Company or other Competitive Local Exchange Carrier.

4.5.1 When TWTC assumes responsibility for such service, all terms and conditions defined in the Tariff will apply for services provided within the AT&T service area only.

4.5.2 Service terminating in an Independent Company or other Competitive Local Exchange Carrier area will be provisioned and billed by the Independent Company or other Competitive Local Exchange Carrier directly to TWTC.

4.5.3 TWTC must establish a billing arrangement with the Independent Company or other Competitive Local Exchange Carrier prior to assuming an End User account where such circumstances apply.

4.5.4 Specific guidelines regarding such services are available on the AT&T Web site at http://www.interconnection.bellsouth.com.

5. Maintenance of Services

5.1 Services resold pursuant to this Attachment and AT&T's General Subscriber Service Tariff and Private Line Service Tariff and facilities and equipment provided by AT&T shall be maintained by AT&T.

5.2 TWTC or its End Users may not rearrange, move, disconnect, remove or attempt to repair any facilities owned by AT&T except with the written consent of AT&T.

5.3 TWTC accepts responsibility to notify AT&T of situations that arise that may result in a service problem.

5.4 TWTC will contact the appropriate repair centers in accordance with procedures established by AT&T.

5.5 For all repair requests, TWTC shall adhere to AT&T's prescreening guidelines prior to referring the trouble to AT&T.

5.6 AT&T will bill TWTC for handling troubles that are found not to be in AT&T's network pursuant to its standard time and material charges. The standard time and material charges will be no more than what AT&T charges to its retail customers for the same services.

6. Establishment of Service

6.1 After receiving certification as a local exchange carrier from the applicable regulatory agency, TWTC will provide the appropriate AT&T Advisory team manager the necessary documentation to enable AT&T to establish accounts for resold services ("master account"). TWTC is required to provide the following

before a master account is established: blanket letter of authorization, misdirected number form, proof of PSC/PUC certification, the Application for Master Account, an Operating Company Number ("OCN") assigned by the National Exchange Carriers Association ("NECA") and a deposit and tax exemption certificate, if applicable.

6.2 TWTC shall provide to AT&T a blanket letter of authorization ("LOA") certifying that TWTC will have End User authorization prior to viewing the End User's customer service record or switching the End User's service. AT&T will not require End User confirmation prior to establishing service for TWTC's End User.

6.3 AT&T will accept a request directly from the End User for conversion of the End User's service from TWTC to AT&T or will accept a request from another CLEC for conversion of the End User's service from TWTC to such other CLEC. Upon completion of the conversion AT&T will notify TWTC that such conversion has been completed.

7. Discontinuance of Service

7.1 The procedures for discontinuing service to an End User are as follows:

7.1.1 AT&T will deny service to TWTC's End User on behalf of, and at the request of, TWTC. Upon restoration of the End User's service, restoral charges will apply and will be the responsibility of TWTC.

7.1.2 At the request of TWTC, AT&T will disconnect a TWTC End User.

7.1.3 All requests by TWTC for denial or disconnection of an End User for nonpayment must be in writing.

7.1.4 TWTC will be made solely responsible for notifying the End User of the proposed disconnection of the service.

7.1.5 AT&T will continue to process calls made to the Annoyance Call Center and will advise TWTC when it is determined that annoyance calls are originated from one of its End User's locations. AT&T shall be indemnified, defended and held harmless by TWTC and/or the End User against any claim, loss or damage arising from providing this information to TWTC. It is the responsibility of TWTC to take the corrective action necessary with its End Users who make annoying calls. (Failure to do so will result in AT&T's disconnecting the End User's service.)

8 White Pages Listings

8.1 AT&T shall provide TWTC and its End Users access to white pages directory listings under the following terms:

8.1.2 Listings. TWTC shall provide all new, changed and deleted listings on a timely basis and AT&T or its agent will include TWTC residential and business End User listings in the appropriate White Pages (residential and business) or alphabetical directories in the geographic areas covered by this Agreement. Directory listings will make no distinction between TWTC and AT&T End Users. TWTC shall provide listing information in accordance with the procedures set forth in The AT&T Business Rules for Local Ordering found at AT&T's Interconnection Services Web site.

8.1.3 Unlisted/Non-Published End Users. TWTC will be required to provide to AT&T the names, addresses and telephone numbers of all TWTC End Users who wish to be omitted from directories. Unlisted/Non-Published listings will be subject to the rates as set forth in AT&T's General Subscriber Services Tariff (GSST) and shall not be subject to wholesale discount.

8.1.4 Inclusion of TWTC End Users in Directory Assistance Database. AT&T will include and maintain TWTC End User listings in AT&T's Directory Assistance databases. TWTC shall provide such Directory Assistance listings to AT&T at no charge.

8.1.5 Listing Information Confidentiality. AT&T will afford TWTC's directory listing information the same level of confidentiality that AT&T affords its own directory listing information.

8.1.6 Additional and Designer Listings. Additional and designer listings will be offered by AT&T at tariffed rates as set forth in the GSST and shall not be subject to the wholesale discount.

8.1.7 Rates. So long as TWTC provides listing information to AT&T as set forth in Section 8.1.2 above, AT&T shall provide to TWTC one (1) basic White Pages directory listing per TWTC End User at no charge other than applicable service order charges as set forth in AT&T's tariffs. Except in the case of a local service request (LSR) submitted solely to port a number from AT&T, if such listing is requested on the initial LSR associated with the request for services, a single manual service order charge or electronic service order charge, as appropriate, as described in Attachment 6 of this Agreement, will apply to both the request for service and the request for the directory listing. Where a subsequent LSR is placed solely to request a directory listing, or is placed to port a number and request a directory listing, separate service order charges as set forth in AT&T's tariffs shall apply, as well as the manual service order charge or the electronic service order charge, as appropriate, as described in Attachment 6 of this Agreement.

8.2 Directories. AT&T or its agent shall make available White Pages directories to TWTC End User at no charge or as specified in a separate agreement between TWTC and AT&T's agent.

8.3 Procedures for submitting TWTC Subscriber Listing Information (SLI) are found in The AT&T Business Rules for Local Ordering found at AT&T's Interconnection Services Web site.

8.3.1 TWTC authorizes AT&T to release all TWTC SLI provided to AT&T by TWTC to qualifying third parties pursuant to either a license agreement or AT&T's Directory Publishers Database Service (DPDS), General Subscriber Services Tariff (GSST), as the same may be amended from time to time. Such TWTC SLI shall be intermingled with AT&T's own End User listings and listings of any other CLEC that has authorized a similar release of SLI.

8.3.2 No compensation shall be paid to TWTC for AT&T's receipt of TWTC SLI, or for the subsequent release to third parties of such SLI. In addition, to the extent AT&T incurs costs to modify its systems to enable the release of TWTC's SLI, or costs on an ongoing basis to administer the release of TWTC SLI, TWTC shall pay to AT&T its proportionate share of the reasonable costs associated therewith. At any time that costs may be incurred to administer the release of TWTC's SLI, TWTC will be notified. If TWTC does not wish to pay its proportionate share of these reasonable costs, TWTC may instruct AT&T that it does not wish to release its SLI to independent publishers, and TWTC shall amend this Agreement accordingly. TWTC will be liable for all costs incurred until the effective date of the amendment.

8.3.3 Neither AT&T nor any agent shall be liable for the content or accuracy of any SLI provided by TWTC under this Agreement. TWTC shall indemnify, except to the extent caused by AT&T's gross negligence or willful misconduct, hold harmless and defend AT&T and its agents from and against any damages, losses, liabilities, demands, claims, suits, judgments, costs and expenses (including but not limited to reasonable attorneys' fees and expenses) arising from AT&T's tariff obligations or otherwise and resulting from or arising out of any third party's claim of inaccurate TWTC listings or use of the SLI provided pursuant to this Agreement. AT&T may forward to TWTC any complaints received by AT&T relating to the accuracy or quality of TWTC listings.

8.3.4 Listings and subsequent updates will be released consistent with AT&T system changes and/or update scheduling requirements.

9. Operator Services (Operator Call Processing and Directory Assistance)

9.1 Operator Call Processing provides: (1) operator handling for call completion (for example, collect, third number billing, and manual calling-card calls). (2) operator or automated assistance for billing after the End User has dialed the called number (for example, calling card calls); and (3) special services including but not limited to Busy Line Verification and Emergency Line Interrupt (ELI), Emergency Agency Call and Operator-assisted Directory Assistance.

9.2 Upon request for AT&T Operator Call Processing, AT&T shall:

9.2.1 Process 0+ and 0- dialed local calls

9.2.2 Process 0+ and 0- intraLATA toll calls.

9.2.3 Process calls that are billed to TWTC End User's calling card that can be validated by AT&T.

9.2.4 Process person-to-person calls.

9.2.5 Process collect calls.

9.2.6 Provide the capability for callers to bill a third party and shall also process such calls.

9.2.7 Process station-to-station calls.

9.2.8 Process Busy Line Verify and Emergency Line Interrupt requests.

9.2.9 Process emergency call trace originated by Public Safety Answering Points.

9.2.10 Process operator-assisted directory assistance calls.

9.2.11 Adhere to equal access requirements, providing TWTC local End Users the same IXC access that AT&T provides its own operator service.

9.2.12 Exercise at least the same level of fraud control in providing Operator Service to TWTC that AT&T provides for its own operator service.

9.2.13 Perform Billed Number Screening when handling Collect, Person-to-Person, and Billed-To-Third-Party calls.

9.2.14 Direct customer account and other similar inquiries to the customer service center designated by TWTC.

9.2.15 Provide call records to TWTC in accordance with ODUF standards.

9.2.16 The interface requirements shall conform to the interface specifications for the platform used to provide Operator Services as long as the interface conforms to industry standards.

9.3 Directory Assistance Service. Directory Assistance Service provides local and non-local End User telephone number listings with the option to complete the call at the caller's direction separate and distinct from local switching.

9.3.1 Directory Assistance Service shall provide up to two listing requests per call, if available and if requested by TWTC's End User. AT&T shall provide caller-

optional directory assistance call completion service at rates set forth in AT&T's General Subscriber Services Tariff to one of the provided listings.

9.4 Directory Assistance Service Updates. AT&T shall update End User listings changes daily. These changes include:

9.4.1 New End User connections

9.4.2 End User disconnections

9.4.3 End User address changes

9.4.4 These updates shall also be provided for non-listed and non-published numbers for use in emergencies.

9.4.5 Unbranded DA and/or OCP calls ride common trunk groups provisioned by AT&T from those end offices identified by TWTC to the AT&T Tops. The calls are routed to "No Announcement."

10 Branding for Wholesale Operator Call Processing and Directory Assistance

10.1 AT&T's branding feature provides a definable announcement to TWTC End Users using Directory Assistance (DA)/Operator Call Processing (OCP) prior to placing such End Users in queue or connecting them to an available operator or automated operator system. This feature allows TWTC to have its calls custom branded with TWTC's name on whose behalf AT&T is providing DA and/or OCP. Rates for the branding features are set forth in Exhibit D of this Attachment.

10.2 AT&T offers three branding options to TWTC when ordering AT&T's DA and OCP: AT&T Branding, Unbranding and Custom Branding.

10.3 Upon receipt of the custom branding order from TWTC, the order is considered firm after ten (10) business days. Should TWTC decide to cancel the order, TWTC must provide written notification to TWTC's Local Contract Manager. If TWTC decides to cancel after ten (10) business days from receipt of the custom branding order, TWTC shall pay all charges per the order. For branding and unbranding via Originating Line Number Screening (OLNS), TWTC must contact its account team to initiate the order via the OLNS Branding Order form.

10.4 Branding via Originating Line Number Screening (OLNS). AT&T Branding, Unbranding and Custom Branding are also available for DA, OCP or both via OLNS software. When utilizing this method of Unbranding or Custom Branding, TWTC shall not be required to purchase dedicated trunking.

10.5 AT&T Branding is the default branding offering.

10.5.1 For AT&T to provide Unbranding or Custom Branding via OLNS software for OCP or for DA, TWTC must have its Operating Company Number (OCN(s)) and telephone numbers reside in AT&T's LIDB. To implement Unbranding and Custom Branding via OLNS software, TWTC must submit a manual order form which requires, among other things, TWTC's OCN and a forecast, pursuant to the appropriate AT&T form provided, for the traffic volume anticipated for each AT&T TOPS during the peak busy hour. TWTC shall provide updates to such forecast on a quarterly basis and at any time such forecasted traffic volumes are expected to change significantly. Upon TWTC's purchase of Unbranding or Custom Branding using OLNS software for any particular TOPS, all TWTC End Users served by that TOPS will receive the Unbranded "no announcement" or the Custom Branded announcement.

11. Line Information Database (LIDB)

11.1 The AT&T Line Information Database (LIDB) stores current information on working telephone numbers and billing account numbers. LIDB data is used by providers of Telecommunications Services to validate billing of collect calls, calls billed to a third party number and nonproprietary calling card calls, to screen out attempts to bill calls to payphones, for billing and for fraud prevention.

11.2 Where TWTC is purchasing Resale services AT&T shall utilize AT&T's service order generated from TWTC LSR's to populate LIDB with TWTC's End User information AT&T provides access to information in its LIDB, including TWTC End User information, to various providers of Telecommunications Services via queries to LIDB pursuant to applicable tariffs. Information stored for TWTC, pursuant to this Agreement, shall be available to those Telecommunications Service providers.

11.2.1 When necessary for fraud control measures, AT&T may perform additions, updates and deletions of TWTC data to the LIDB (e.g., calling card deactivation).

11.3 Responsibilities of the Parties

11.3.1 AT&T will administer the data provided by TWTC pursuant to this Agreement in the same manner as AT&T administers its own data.

11.3.2 TWTC is responsible for completeness and accuracy of the data being provided to AT&T.

11.3.3 AT&T shall not be responsible to TWTC for any lost revenue which may result from AT&T's administration of the LIDB pursuant to its established practices and procedures as they exist.

12. RAO Hosting

12.1 RAO Hosting is not required for resale in the AT&T region.

13. Optional Daily Usage File (ODUF)

13.1 The Optional Daily Usage File (ODUF) Agreement with terms and conditions is included in this Attachment as Exhibit B. Rates for ODUF are as set forth in Exhibit D of this Attachment.

13.2 AT&T will provide ODUF service upon written request.

14. Enhanced Optional Daily Usage File (EODUF)

14.1 The Enhanced Optional Daily Usage File (EODUF) service Agreement with terms and conditions is included in this Attachment as Exhibit C. Rates for EODUF are as set forth in Exhibit D of this Attachment.

14.2 AT&T will provide EODUF service upon written request.

EXCLUSIONS AND LIMITATIONS ON SERVICES AVAILABLE FOR RESALE (Note 3)

	Type of Service	AL		FL		GA		KY		LA		MS		NC		SC		TN	
		Resale	Discount	Resale	Discount	Resale	Discount	Resale	Discount	Resale	Discount	Resale	Discount	Resale	Discount	Resale	Discount	Resale	Discount
1	Grandfathered Services (Note 1)	Yes	Yes	Yes	Yes	Yes	Yes	Yes	Yes	Yes	Yes	Yes	Yes	Yes	Yes	Yes	Yes	Yes	Yes
2	Promotions - > 90 Days(Note 2 & 3)	Yes	Yes	Yes	Yes	Yes	Yes	Yes	Yes	Yes	Yes	Yes	Yes	Yes	Yes	Yes	Yes	Yes	Yes
3	Promotions - ≤ 90 Days (Note 2 & 3)	Yes	No	Yes	No	Yes	No	Yes	No	Yes	No	Yes	No	Yes	No	Yes	No	Yes	No
4	Lifeline/Link Up Services	Yes	Yes	Yes	Yes	Yes	Yes	No	No	Yes	Yes	Yes	Yes	Yes	Yes	Yes	Yes	Yes	Yes
5	911/E911 Services	Yes	Yes	Yes	Yes	Yes	Yes	Yes	Yes	No	No	Yes	Yes	Yes	Yes	Yes	Yes	Yes	Yes
6	N11 Services (Note 1)	Yes	Yes	Yes	Yes	Yes	Yes	No	No	No	No	Yes	Yes	Yes	Yes	No	No	Yes	Yes
7	MemoryCall® Service	Yes	No	Yes	No	Yes	No	Yes	No	Yes	No	Yes	No	Yes	No	Yes	No	Yes	No
8	Mobile Services	Yes	No	Yes	No	Yes	No	Yes	No	Yes	No	Yes	No	Yes	No	Yes	No	Yes	No
9	Federal Subscriber Line Charges	Yes	No	Yes	No	Yes	No	Yes	No	Yes	No	Yes	No	Yes	No	Yes	No	Yes	No
10	Nonrecurring Charges	Yes	Yes	Yes	Yes	Yes	Yes	Yes	Yes	Yes	Yes	Yes	Yes	Yes	Yes	Yes	Yes	Yes	No
11	End User Line Chg-Number Portability	Yes	No	Yes	No	Yes	No	Yes	No	Yes	No	Yes	No	Yes	No	Yes	No	Yes	No
12	Public Telephone Access Svc(PTAS)	Yes	Yes	Yes	Yes	Yes	Yes	Yes	Yes	Yes	Yes	Yes	Yes	Yes	Yes	Yes	No	Yes	Yes
13	Inside Wire Maint Service Plan	Yes	No	Yes	No	Yes	No	Yes	No	Yes	No	Yes	No	Yes	No	Yes	No	Yes	No

	Applicable Notes:
1.	**Grandfathered services** can be resold only to existing subscribers of the grandfathered service.
2.	Where available for resale, **promotions** will be made available only to End Users who would have qualified for the promotion had it been provided by AT&T directly.
3.	Promotions shall be available only for the term set forth in the applicable tariff.
4.	Some of AT&T's local exchange and toll telecommunications services are not available in certain central offices and areas.

Optional Daily Usage File

1. Upon written request from TWTC, AT&T will provide the Optional Daily Usage File (ODUF) service to TWTC pursuant to the terms and conditions set forth in this section.

2. TWTC shall furnish all relevant information required by AT&T for the provision of the ODUF.

3. The ODUF feed provides TWTC messages that were carried over the AT&T network and processed by AT&T for TWTC.

4. Charges for ODUF will appear on TWTC's monthly bills for the previous month's usage in arrears. The charges are as set forth in Exhibit D to this Attachment.

5. The ODUF feed will contain both rated and unrated messages. All messages will be in the standard Alliance for Telecommunications Industry Solutions (ATIS) EMI record format.

5.1 Messages that error in the billing system of TWTC will be the responsibility of TWTC. If, however, TWTC should encounter significant volumes of error messages that prevent processing by TWTC within its systems, AT&T will work with TWTC to determine the source of the errors and the appropriate resolution.

6. ODUF Specifications

6.1 ODUF Message to be Transmitted

6.1.1 The following messages recorded by AT&T will be transmitted to TWTC:

6.1.1.1 Message recording for per use/per activation type services (examples: Three Way Calling, Verify, Interrupt, Call Return, etc.)

6.1.1.2 Measured local calls

6.1.1.3 Directory Assistance messages

6.1.1.4 IntraLATA Toll

6.1.1.5 WATS and 800 Service

6.1.1.6 N11

6.1.1.7 Information Service Provider Messages

6.1.1.8 Operator Services Messages

6.1.1.9 Operator Services Message Attempted Calls

6.1.1.10 Credit/Cancel Records

6.1.1.11 Usage for Voice Mail Message Service

6.1.2 Rated Incollects (messages AT&T receives from other revenue accounting offices) appear on ODUF. Rated Incollects will be intermingled with AT&T recorded rated and unrated usage. Rated Incollects will not be packed separately.

6.1.3 AT&T will perform duplicate record checks on records processed to ODUF. Any duplicate messages detected will be deleted and not sent to TWTC.

6.1.4 In the event that TWTC detects a duplicate on ODUF they receive from AT&T, TWTC will drop the duplicate message and will not return the duplicate to AT&T.

6.2 ODUF Physical File Characteristics

6.2.1 ODUF will be distributed to TWTC via Secure File Transfer Protocol (FTP). The ODUF feed will be a variable block format. The data on the ODUF feed will be in a non-compacted EMI format (175 byte format plus modules). It will be created on a daily basis Monday through Friday except holidays. Details such as dataset name and delivery schedule will be addressed during negotiations of the distribution medium. There will be a maximum of one dataset per workday per OCN. If AT&T determines the Secure FTP Mailbox is nearing capacity levels, AT&T may move the customer to CONNECT: Direct file delivery.

6.2.2 If the customer is moved, CONNECT: Direct data circuits (private line or dial-up) will be required between AT&T and TWTC for the purpose of data transmission. Where a dedicated line is required, TWTC will be responsible for ordering the circuit, overseeing its installation and coordinating the installation with AT&T. TWTC will also be responsible for any charges associated with this line. Equipment required on the AT&T end to attach the line to the mainframe computer and to transmit messages successfully on an ongoing basis will be negotiated on an individual case basis. Any costs incurred for such equipment will be TWTC's responsibility. Where a dial-up facility is required, dial circuits will be installed in the AT&T data center by AT&T and the associated charges assessed to TWTC. Additionally, all message toll charges associated with the use of the dial circuit by TWTC will be the responsibility of TWTC. Associated equipment on the AT&T end, including a modem, will be negotiated on an individual case basis between the Parties. All equipment, including modems and software, that is required on TWTC end for the purpose of data transmission will be the responsibility of TWTC.

6.2.3 If TWTC utilizes FTP for data file transmission, purchase of the FTP software will be the responsibility of TWTC.

6.3 ODUF Packing Specifications

6.3.1 The data will be packed using ATIS EMI records. A pack will contain a minimum of one message record or a maximum of 99,999 message records plus a pack header record and a pack trailer record. One transmission can contain a maximum of 99 packs and a minimum of one pack.

6.3.2 The OCN, From RAO, and Invoice Number will control the invoice sequencing. The From RAO will be used to identify to TWTC which AT&T RAO is sending the message. AT&T and TWTC will use the invoice sequencing to control data exchange. AT&T will be notified of sequence failures identified by TWTC and resend the data as appropriate.

6.4 ODUF Pack Rejection

6.4.1 TWTC will notify AT&T within one business day of rejected packs (via the mutually agreed medium). Packs could be rejected because of pack sequencing discrepancies or a critical edit failure on the Pack Header or Pack Trailer records (e.g., out-of-balance condition on grand totals, invalid data populated). Standard ATIS EMI error codes will be used. TWTC will not be required to return the actual rejected data to AT&T. Rejected packs will be corrected and retransmitted to TWTC by AT&T.

6.5 ODUF Control Data

TWTC will send one confirmation record per pack that is received from AT&T. This confirmation record will indicate TWTC's receipt of the pack and the acceptance or rejection of the pack. Pack Status Code(s) will be populated using standard ATIS EMI error codes for packs that were rejected by TWTC for reasons stated in the above section.

6.6 ODUF Testing

6.6.1 Upon request from TWTC, AT&T shall send ODUF test files to TWTC. The Parties agree to review and discuss the ODUF file content and/or format. For testing of usage results, AT&T shall request that TWTC set up a production (live) file. The live test may consist of TWTC’s employees making test calls for the types of services TWTC requests on ODUF. These test calls are logged by TWTC, and the logs are provided to AT&T. These logs will be used to verify the files. Testing will be completed within thirty (30) days from the date on which the initial test file was sent.

Enhanced Optional Daily Usage File

1. Upon written request from TWTC, AT&T will provide the Enhanced Optional Daily Usage File (EODUF) service to TWTC pursuant to the terms and conditions set forth in this section. EODUF will only be sent to existing ODUF subscribers who request the EODUF option.

2. TWTC shall furnish all relevant information required by AT&T for the provision of the EODUF.

3. The EODUF will provide usage data for local calls originating from resold Flat Rate Business and Residential Lines.

4. Charges for EODUF will appear on TWTC's monthly bills for the previous month's usage in arrears. The charges are as set forth in Exhibit D to this Attachment.

5. All messages will be in the standard Alliance for Telecommunications Industry Solutions (ATIS) EMI record format.

6. Messages that error in the billing system of TWTC will be the responsibility of TWTC. If, however, TWTC should encounter significant volumes of error messages that prevent processing by TWTC within its systems, AT&T will work with TWTC to determine the source of the errors and the appropriate resolution.

7. EODUF Specifications.

7.1 EODUF Usage To Be Transmitted

7.1.1 The following messages recorded by AT&T will be transmitted to TWTC:

7.1.1.1 Customer usage data for flat rated local call originating from TWTC's End User lines (1FB or 1FR). The EODUF record for flat rate messages will include:

7.1.1.1.1 Date of Call

7.1.1.1.2 From Number

7.1.1.1.3 To Number

7.1.1.1.4 Connect Time

7.1.1.1.5 Conversation Time

7.1.1.1.6 Method of Recording

7.1.1.1.7 From RAO

7.1.1.1.8 Rate Class

7.1.1.1.9 Message Type

7.1.1.1.10 Billing Indicators

7.1.1.1.11 Bill to Number

7.1.2 AT&T will perform duplicate record checks on EODUF records processed to O DUF. Any duplicate messages detected will be deleted and not sent to TWTC.

7.1.3 In the event that TWTC detects a duplicate on EODUF they receive from AT&T, TWTC will drop the duplicate message and will not return the duplicate to AT&T.

7.2 EODUF Physical File Characteristics

7.2.1 EODUF feed will be distributed to TWTC via Secure File Transfer Protocol (FTP). The EODUF messages will be intermingled among TWTC's Optional Daily Usage File (ODUF) messages. The EODUF will be a variable block format. The data on the EODUF will be in a non-compacted EMI format (175 byte format plus modules). It will be created on a daily basis Monday through Friday except holiday. If AT&T determines the Secure FTP mailbox is nearing capacity levels, AT&T may move the customer to CONNECT: Direct file delivery.

7.2.2 Data circuits (private line or dial-up) may be required between AT&T and TWTC for the purpose of data transmission. Where a dedicated line is required, TWTC will be responsible for ordering the circuit, overseeing its installation and coordinating the installation with AT&T. TWTC will also be responsible for any charges associated with this line. Equipment required on the AT&T end to attach the line to the mainframe computer and to transmit successfully ongoing will be negotiated on an individual case basis. Where a dial-up facility is required, dial circuits will be installed in the AT&T data center by AT&T and the associated charges assessed to TWTC. Additionally, all message toll charges associated with the use of the dial circuit by TWTC will be the responsibility of TWTC. Associated equipment on the AT&T end, including a modem, will be negotiated on an individual case basis between the Parties. All equipment, including modems and software, that is required on TWTC's end for the purpose of data transmission will be the responsibility of TWTC.

7.2.3 If TWTC utilizes FTP for data file transmission, purchase of the FTP software will be the responsibility of TWTC.

7.3 EODUF Packing Specifications

7.3.1 The data will be packed using ATIS EMI records. A pack will contain a minimum of one message record or a maximum of 99,999 message records plus a pack header record and a pack trailer record. One transmission can contain a maximum of 99 packs and a minimum of one pack.

7.3.2 The OCN, From (RAO), and Invoice Number will control the invoice sequencing. The From RAO will be used to identify to TWTC which AT&T RAO is sending the message. AT&T and TWTC will use the invoice sequencing to control data exchange. AT&T will be notified of sequence failures identified by TWTC and resend the data as appropriate.

RESALE DISCOUNTS & RATES - South Carolina

Att: 1 Exh: D

CATEGORY	RATE ELEMENTS	Interim	Zone	BCS	USOC	RATES($)					Svc Order Submitted Elec per LSR	Svc Order Submitted Manually per LSR	Incremental Charge - Manual Svc Order vs. Electronic-1st	Incremental Charge - Manual Svc Order vs. Electronic-Add'l	Incremental Charge - Manual Svc Order vs. Electronic-Disc 1st	Incremental Charge - Manual Svc Order vs. Electronic-Disc Add'l
						Rec	Nonrecurring		Nonrecurring Disconnect		OSS Rates($)					
							First	Add'l	First	Add'l	SOMEC	SOMAN	SOMAN	SOMAN	SOMAN	SOMAN
RESALE APPLICABLE DISCOUNTS																
	Residence %					14.80										
	Business %					14.80										
	CSAs %					8.98										
OPERATIONS SUPPORT SYSTEMS (OSS) - "REGIONAL RATES"																
	NOTE: (1) CLEC should contact its contract negotiator if it prefers the "state specific" OSS charges as ordered by the State Commissions. The OSS charges currently contained in this rate exhibit are the AT&T "regional" service ordering charges. CLEC may elect either the state specific Commission ordered rates for the service ordering charges, or CLEC may elect the regional service ordering charge, however, CLEC can not obtain a mixture of the two regardless if CLEC has a interconnection contract established in each of the 9 states.															
	OSS - Electronic Service Order Charge, Per Local Service Request (LSR) - Resale Only				SOMEC		3.50	0.00	3.50	0.00						
	OSS - Manual Service Order Charge, Per Local Service Request (LSR) - Resale Only				SOMAN		19.99	0.00	19.99	0.00						
ODUF/EODUF SERVICES																
	OPTIONAL DAILY USAGE FILE (ODUF)															
	ODUF: Recording, per message					0.0000216										
	ODUF: Message Processing, per message					0.004704										
	ODUF: Message Processing, per Magnetic Tape provisioned					48.87										
	ODUF: Data Transmission (CONNECT:DIRECT), per message					0.00010863										
	ENHANCED OPTIONAL DAILY USAGE FILE (EODUF)															
	EODUF: Message Processing, per message					0.258301										
SELECTIVE CALL ROUTING USING LINE CLASS CODES (SCR-LCC)																
	Selective Routing Per Unique Line Class Code Per Request Per Switch						84.89	84.89	14.14	14.14						
DIRECTORY ASSISTANCE CUSTOM BRANDING ANNOUNCEMENT via OLNS SOFTWARE																
	Recording of DA Custom Branded Announcement						3,000.00	3,000.00								
	Loading of DA Custom Branded Anouncement per Switch per OCN						1,170.00	1,170.00								
DIRECTORY ASSISTANCE UNBRANDING via OLNS SOFTWARE																
	Loading of DA per OCN (1 OCN per Order)						420.00	420.00								
	Loading of DA per Switch per OCN						16.00	16.00								
OPERATOR ASSISTANCE CUSTOM BRANDING ANNOUNCEMENT via OLNS SOFTWARE																
	Recording of Custom Branded OA Announcement						7,000.00	7,000.00								
	Loading of Custom Branded OA Announcement per shelf/NAV per OCN						500.00	500.00								
	Loading of OA Custom Branded Announcement per Switch per OCN						1,170.00	1,170.00								
OPERATOR ASSISTANCE UNBRANDING via OLNS SOFTWARE																
	Loading of OA per OCN (Regional)						1,200.00	1,200.00								

Attachment 2

Network Elements and Other Services

TABLE OF CONTENTS

1 Introduction 3

2 Loops 11

3 Line Splitting 35

4 Unbundled Network Element Combinations 38

5 Dedicated Transport and Dark Fiber Transport 43

6 Automatic Location Identification/Data Management System (ALI/DMS) 52

Rates ..... Exhibit A

Rates ..... Exhibit B

ACCESS TO NETWORK ELEMENTS AND OTHER SERVICES

1 Introduction

1.1 This Attachment sets forth rates, terms and conditions for unbundled network elements (Network Elements) and combinations of Network Elements (Combinations) that AT&T offers to TWTC for TWTC's provision of Telecommunications Services in accordance with its obligations under Section 251(c)(3) of the Act. Additionally, this Attachment sets forth the rates, terms and conditions for other facilities and services AT&T makes available to TWTC (Other Services). Additionally, the provision of a particular Network Element or Other Service may require TWTC to purchase other Network Elements or services. In the event of a conflict between this Attachment and any other Section or provision of this Agreement, the provisions of this Attachment shall control. In providing access or obtaining access to Network Elements, Combinations and Other Services, the Parties shall comply with all applicable FCC rules and orders and Commission rules and orders.

1.1.1 The rates for Network Elements, Combinations and Other Services are set forth in Exhibits A and B. If no rate is identified in this Agreement, the rate will be as set forth in the applicable AT&T tariff or as negotiated by the Parties upon request by either Party. If TWTC purchases service(s) from a tariff, all terms and conditions and rates as set forth in such tariff shall apply.

1.1.2 Fractionalized billing shall apply to all UNEs and Combinations such that recurring charges will be prorated based upon the number of days that the UNEs are in service. Non-recurring charges shall not be fractionalized.

1.2 In some cases, Commissions have ordered AT&T to separate its disconnect costs and its installation costs into two (2) separate nonrecurring charges. Accordingly, unless otherwise noted in this Agreement, the Commission ordered disconnect charges will be applied at the time the disconnect activity is performed by AT&T, regardless of whether or not a disconnect order is issued by TWTC. Disconnect charges are set forth in the rate exhibit of this Attachment.

1.3 TWTC may purchase and use Network Elements and Other Services from AT&T in accordance with 47 C.F.R § 51.309.

1.4 AT&T shall provide and TWTC may access UNEs and Other Services in accordance with all applicable FCC and Commission rules and orders, including but not limited to: 47 C.F.R 51.307, 51.309, 51.311, 51.313, 51.315, 51.316, 51.318, 51.319.

1.5 The Parties shall comply with the requirements as set forth in the technical references within this Attachment 2. Such requirements shall be applied in a non-

discriminatory manner and at parity and shall be in accord with all FCC and Commission requirements.

1.6 TWTC shall not obtain a Network Element for the exclusive provision of mobile wireless services or interexchange services.

1.7 Conversion of Wholesale Services to Network Elements or Network Elements to Wholesale Services. Upon request, AT&T shall convert a wholesale service, or group of wholesale services, to the equivalent Network Element or Combination that is available to TWTC pursuant to Section 251 of the Act and under this Agreement or convert a Network Element or Combination that is available to TWTC pursuant to Section 251 of the Act and under this Agreement to an equivalent wholesale service or group of wholesale services offered by AT&T (collectively "Conversion"). AT&T shall charge the applicable nonrecurring switch-as-is rates for Conversions to specific Network Elements or Combinations found in Exhibit A. AT&T shall also charge the same nonrecurring switch-as-is rates when converting from Network Elements or Combinations. Any rate change resulting from the Conversion will be effective as of the next billing cycle following AT&T's receipt of a complete and accurate Conversion request from TWTC. A Conversion shall be considered termination for purposes of any volume and/or term commitments and/or grandfathered status between TWTC and AT&T. Any change from a wholesale service/group of wholesale services to a Network Element/Combination, or from a Network Element/Combination to a wholesale service/group of wholesale services, that requires a physical rearrangement will not be considered to be a Conversion for purposes of this Agreement. AT&T will not require physical rearrangements if the Conversion can be completed through record changes only. Orders for Conversions will be handled in accordance with the guidelines set forth in the Ordering Guidelines and Processes and CLEC Information Packages as referenced in Sections 1.14.1 and 1.14.2 below.

1.8 Except to the extent expressly provided otherwise in this Attachment, in all states, TWTC may not maintain unbundled network elements or combinations of unbundled network elements, that are no longer offered pursuant to this Agreement (collectively "Arrangements"). In the event AT&T determines that TWTC has in place any Arrangements after the Effective Date of this Agreement, AT&T will identify such Arrangements and provide TWTC with thirty (30) days written notice to disconnect or convert such Arrangements. For orders submitted by TWTC within such thirty (30) day period, AT&T will charge the applicable switch-as-is charge set forth in Exhibit A. If TWTC fails to submit orders to disconnect or convert such Arrangements within such thirty (30) day period, AT&T will transition such circuits to the equivalent tariffed AT&T service(s), and shall charge TWTC all applicable disconnect charges as set forth in this Agreement and the full nonrecurring charges for installation of the equivalent tariffed AT&T service as set forth in AT&T's tariffs. For all transitions pursuant to this Section 1.8 that require a physical rearrangement, AT&T shall charge any applicable

nonrecurring installation charges. To the extent no tariff equivalent service exists, AT&T shall disconnect such facility or Arrangement. The applicable recurring tariff charge shall apply to each circuit as of March 11, 2006.

1.8.1 In addition to the foregoing, for the state of Florida, , the applicable recurring tariff charges shall apply to each circuit beginning the day following the thirty (30) day notice period.

1.8.2 Notwithstanding the foregoing, for the state of Georgia, those circuits for which TWTC failed to submit a disconnect or conversion order within such thirty (30) day period and are subsequently transitioned by AT&T pursuant to this Section 1.8.2 shall be subject to the applicable switch-as-is charges set forth in Exhibit A. If an equivalent service is set forth in Exhibit 1, AT&T shall transition to such service. Otherwise, AT&T shall transition to the equivalent tariff service. To the extent no tariff equivalent service exists and no equivalent service is set forth in Exhibit 1, AT&T shall disconnect such facility or Arrangement. The applicable recurring 271 rate, resale or tariffed charge shall apply to each circuit as of March 11, 2006.

1.8.3 Notwithstanding the foregoing, for the state of North Carolina those circuits for which TWTC failed to submit a disconnect or conversion order within such thirty (30) day period and are subsequently transitioned by AT&T pursuant to this Section 1.8.3 shall be subject to applicable switch-as-is charges.

1.8.4 Notwithstanding the foregoing, for the state of Alabama, the written notice provided by AT&T, as described in Section 1.8, must identify by circuit identification number the specific Arrangements to be converted or disconnected. If TWTC fails to dispute AT&T's identified Arrangements or fails to submit orders to disconnect or convert such Arrangements within the established thirty (30) day period, AT&T will transition such circuits to the equivalent tariffed AT&T service(s) subject to the Commission-established switch-as-is rate. The full nonrecurring charges for installation of the equivalent tariffed AT&T service as set forth in AT&T's tariffs will not apply to such conversions. However, the applicable recurring tariff charges shall apply to each circuit upon conversion.

1.8.5 Notwithstanding the foregoing, for the state of Louisiana, AT&T will provide TWTC with written notice identifying the specific Arrangements which must be converted or disconnected. TWTC shall have thirty (30) days from the date of the notice to submit orders to disconnect or convert the Arrangements. Those circuits to be converted to other AT&T services shall be subject to nonrecurring charges associated with that conversion. If TWTC disputes AT&T's identification of Arrangements to be disconnected or converted, TWTC shall send written notice of its dispute within thirty (30) days of AT&T's notice. AT&T shall not disconnect the disputed Arrangements while the dispute is being resolved. If the Parties are unable to reach a voluntary resolution of the dispute, they may petition the Commission for assistance. If TWTC does not dispute AT&T's identification of

Arrangements and fails to submit orders to disconnect or convert such Arrangements within the established thirty (30) day period, AT&T will transition such circuits to the equivalent tariffed AT&T services subject to the full nonrecurring charges for installation of the equivalent tariffed AT&T services as set forth in AT&T's tariffs. The applicable recurring tariff charges shall apply to each circuit upon conversion.

1.9 AT&T's Master List of Unimpaired Wire Centers as Approved by State Commissions in its Region (Master List of Unimpaired Wire Centers), and as modified in accordance with FCC 06-189 (AT&T/AT&T Merger Order), located on the AT&T Interconnection Web site designates those wire centers that, in accordance with state Commission orders, met the FCC's established criteria for non-impairment, as of March 11, 2005, where certain high capacity (DS1 and above) Loops and high capacity Dedicated Transport are no longer available as Network Elements. AT&T's List of Unimpaired Wire Centers in Kentucky and Tennessee (AT&T's List of Unimpaired Wire Centers), also located on the AT&T Interconnection Web site, are those wire centers that AT&T proposed met the FCC's established criteria for non-impairment as of March 11, 2005 but have not yet been approved by these respective Commissions. The Master List of Unimpaired Wire Centers and AT&T's List of Unimpaired Wire Centers shall be subject to modification and/or the addition of wire centers without amendment to this Agreement upon subsequent orders from state Commissions in the respective generic dockets establishing the wire centers that as of March 11, 2005, were unimpaired. Notification of such modification, addition or deletion of wire centers shall be made via AT&T's Carrier Notification process on AT&T's Interconnection Web site. Upon the Effective Date of this Agreement, TWTC may not place any new orders for high capacity Dedicated Transport or high capacity Loops, as applicable, in those wire centers listed on the Master List of Unimpaired Wire Centers. In those wire centers set forth on AT&T's List of Unimpaired Wire Centers, TWTC may place new orders for high capacity Loops and high capacity Dedicated Transport pursuant to Section 1.9.1 (self-certification) until such wire centers are approved by the Commissions. To the extent TWTC placed orders after March 10, 2005 for high capacity Loops or high capacity Dedicated Transport in wire centers designated on the Master List of Unimpaired Wire Centers, as amended as specified above, within thirty (30) days after the Effective Date of this Agreement, or in the case of additions to the Master List of Unimpaired Wire Centers, within thirty (30) days after the notice of such addition, TWTC shall submit an LSR(s) or spreadsheet(s), as applicable, identifying those non-compliant circuits to be disconnected or converted to the equivalent AT&T tariffed service or, in the state of Georgia, to the equivalent 271 service set forth in Exhibit 1. AT&T shall bill TWTC the difference between the UNE recurring rates for such circuits pursuant to this Agreement and the applicable recurring charges for the equivalent AT&T tariffed service or 271 service in the state of Georgia from the date UNE circuit was installed in the unimpaired wire center to the date the circuit is disconnected or transitioned to the

equivalent AT&T tariffed service. If TWTC fails to submit an LSR or spreadsheet identifying such de-listed circuits within thirty (30) days as set forth above, AT&T will identify such circuits and convert them to the equivalent AT&T tariffed service, and charge TWTC applicable disconnect charges for the UNE circuit and the difference between the UNE recurring rate billed for such circuit and the full non-recurring and recurring charges for the tariffed service from the date the UNE circuit was installed in the unimpaired wire center to the date the circuit is transitioned to the equivalent AT&T tariffed service. To the extent there is no equivalent AT&T tariffed service for the de-listed UNE circuit, AT&T will disconnect the circuit and bill TWTC full disconnect charges.

1.9.1 Prior to submitting an order pursuant to this Agreement for high capacity Dedicated Transport or high capacity Loops, TWTC shall undertake a reasonably diligent inquiry to determine whether TWTC is entitled to unbundled access to such Network Elements in accordance with the terms of this Agreement. By submitting any such order, TWTC self-certifies that to the best of TWTC's knowledge, the high capacity Dedicated Transport or high capacity Loop requested is available as a Network Element pursuant to this Agreement. Upon receiving such order, except in wire centers set forth on the Master List of Unimpaired Wire Centers, or AT&T's List of Unimpaired Wire Centers, AT&T shall process the request in reliance upon TWTC's self-certification. To the extent AT&T believes that such request does not comply with the terms of this Agreement, AT&T shall seek dispute resolution in accordance with the General Terms and Conditions of this Agreement. In the event such dispute is resolved in AT&T's favor, AT&T shall bill TWTC the difference between the rates for such circuits pursuant to this Agreement and the applicable nonrecurring and recurring charges for the equivalent AT&T alternative arrangement from the date of installation to the date the circuit is transitioned to the equivalent AT&T alternative arrangement

1.9.2 In the event that (1) AT&T designated a wire center as unimpaired as set forth on the Master List of Unimpaired Wire Centers on the AT&T Interconnection Web site, or AT&T's List of Unimpaired Wire Centers, (2) as a result of such designation,TWTC converted high capacity Dedicated Transport or high capacity Loops to other services or ordered new services as services other than high capacity Dedicated Transport or high capacity Loop Network Elements subsequent to March 10, 2005, (3) TWTC otherwise would have been entitled to high capacity Dedicated Transport or high capacity Loops in such wire center at the time such alternative services were provisioned, and (4) AT&T acknowledges, or a state or federal regulatory body with authority determines, that, at the time AT&T designated such wire center as unimpaired, such wire center did not meet the FCC's non-impairment criteria, then upon request of TWTCconsistent with the applicable ordering processes as reflected in the Guides, such Guides being consistent with Section 30.2.1 of the General Terms and Conditions, located on AT&T's Interconnection Web site no later than sixty (60) days after AT&T

acknowledges or the state or federal regulatory body issues an order making such a finding, AT&T shall transition to high capacity Dedicated Transport or high capacity Loops, as appropriate, any alternative services in such wire center that were established after such wire center was designated as unimpaired. In such instances, AT&T shall refund to TWTC the difference between the rate paid by TWTC for such services and the applicable rates set forth herein for high capacity Dedicated Transport or high capacity Loops, including but not limited to any charges associated with the Conversion (as defined in Section 1.7 above) from high capacity Dedicated Transport or high capacity Loops to other wholesale services, if applicable, for the period from the later of March 11, 2005, or the date the circuit became a wholesale service to the date the circuit is transitioned to high capacity Dedicated Transport or high capacity Loop as described in this Section.

1.10 TWTC may utilize UNEs and Other Services in a manner consistent with applicable industry standards and applicable AT&T Technical References incorporated into AT&T's Guides found on AT&T's website at http://interconnection.bellsouth.com.

1.11 AT&T will perform Routine Network Modifications (RNM) in accordance with FCC 47 C.F.R. § 51.319 (a)(7) and (e)(4) for Loops and Dedicated Transport provided under this Attachment. If AT&T has anticipated such RNMs and performs them during normal operations and such function was included in AT&T's cost studies that, through Commission proceedings or agreement by the Parties resulted in the rates set forth in Exhibit A, then AT&T shall perform such RNM at no additional charge. RNM shall be performed within the intervals established for the Network Element and subject to the service quality measurements and associated remedies set forth in Attachment 9 to the extent such RNM were anticipated in the setting of such intervals. If AT&T has not anticipated a requested network modification as being a RNM and has not recovered the costs of such RNM in the rates set forth in Exhibit A, then AT&T TWTC must submit a LSR to have the work performed. Each request will be handled as a project on an individual case basis until such time as AT&T incorporates such RNM into its normal operations and develops a charge for such RNM that is included in this Agreement by amendment hereto. If TWTC believes that a RNM should be incorporated into AT&T's normal operations and AT&T disagrees with such determination, the dispute shall be resolved pursuant to the resolution of disputes provision of the General Terms and Conditions. AT&T will provide a price quote for the request, and upon receipt of payment from TWTC, AT&T shall perform the RNM. If TWTC believes that AT&T's firm price quote is not consistent with the requirements of the Act, TWTC may seek dispute resolution in accordance with the dispute resolution provisions set forth in the General Terms and Conditions of this Agreement. While the dispute is pending, TWTC shall have the option of requesting AT&T to perform the RNM subject to a retroactive pricing true-up upon an effective Commission order resolving the dispute. The Parties agree that subsequent true-ups may result from multiple

rounds of appellate or reconsideration decisions, should the relevant Party pursue such appeals/reconsiderations/review and prevail. AT&T will provide a cost study upon request after the firm quote.

1.11.1 Notwithstanding the foregoing, for the states of Alabama and Georgia, AT&T shall perform RNM at no additional charge, provided however, for any RNM performed by AT&T for which costs are not recovered through existing rates; AT&T can seek resolution from the Commission.

1.12 Commingling of Services

1.12.1 Commingling means the connecting, attaching, or otherwise linking of a Network Element, or a Combination, to one or more Telecommunications Services or facilities that TWTC has obtained at wholesale from AT&T, or the combining of a Network Element or Combination with one or more such wholesale Telecommunications Services or facilities. TWTC must comply with all rates, terms or conditions applicable to such wholesale Telecommunications Services or facilities. Commingle means the act of commingling.

1.12.2 AT&T shall provide commingling of services in accordance with 47 C.F.R. 51.309.

1.12.3 Subject to the limitations set forth elsewhere in this Attachment, AT&T shall not deny access to a Network Element or a Combination on the grounds that one or more of the elements: (1) is connected to, attached to, linked to, or combined with such a facility or service obtained from AT&T; or (2) shares part of AT&T's network with access services or inputs for mobile wireless services and/or interexchange services.

1.12.4 Except for the states of Georgia, Kentucky, and North Carolina, notwithstanding any other provision of this Agreement, AT&T shall not be obligated to commingle or combine, pursuant to this Agreement, Network Elements or Combinations with any service, network element or other offering that it is obligated to make available pursuant only to Section 271 of the Act.

1.12.4.1 In Georgia, Kentucky and North Carolina, AT&T shall permit TWTC to commingle a Network Element or a Combination obtained pursuant to Section 251 with one (1) or more facilities or services that a requesting carrier has obtained at wholesale from AT&T pursuant to a method other than unbundling under Section 251(c)(3) of the Act, including those obtained as Section 271 elements.

1.12.5 Unless otherwise agreed to by the Parties, the Network Element portion of a commingled circuit will be billed at the rates set forth in this Agreement and the remainder of the circuit or service will be billed in accordance with AT&T's tariffed rates, rates set forth in a separate agreement between the Parties, or in the

state of Georgia only, in accordance with the rates set forth in Exhibit 1 of this Attachment, as applicable.

1.12.6 When multiplexing equipment is attached to a commingled circuit, the multiplexing equipment will be billed from the same agreement or tariff as the higher bandwidth circuit. Central Office Channel Interfaces (COCI) will be billed from the same agreement or tariff as the lower bandwidth circuit.

1.12.7 The Commingling process and requirements will be handled in accordance with the guidelines set forth in the Ordering Guidelines and Processes and CLEC Information Packages as referenced in Sections 1.14.1 and 1.14.2 below.

1.13 Terms and conditions for order cancellation charges and Service Date Advancement Charges will apply in accordance with Attachment 6 and are incorporated herein by this reference. The charges shall be as set forth in Exhibit A.

1.14 Ordering Guidelines and Processes

1.14.1 For information regarding Ordering Guidelines and Processes for various Network Elements, Combinations and Other Services, TWTC should refer to the "Guides" section of the AT&T Interconnection Web site. TWTC will be notified of any material changes to such "Guides".

1.14.2 Additional information may also be found in the individual CLEC Information Packages, located at the "CLEC UNE Products" on AT&T's Interconnection Web site.

1.14.3 The provisioning of Network Elements, Combinations and Other Services to TWTC's Collocation Space will require cross-connections within the central office to connect the Network Element, Combinations or Other Services to the demarcation point associated with TWTC's Collocation Space. These cross-connects are separate components that are not considered a part of the Network Element, Combinations or Other Services and, thus, have a separate charge pursuant to Attachment 4.

1.15 Testing/Trouble Reporting

1.15.1 TWTC will be responsible for testing and isolating troubles on Network Elements. TWTC must test and isolate trouble to the AT&T network before reporting the trouble to the Network Elements Customer Wholesale Interconnection Network Services (CWINS) Center. Upon request from AT&T at the time of the trouble report, TWTC will be required to provide the results of the TWTC test which indicate a problem on the AT&T network.

1.15.2 Once TWTC has isolated a trouble to the AT&T network, and has issued a trouble report to AT&T, AT&T will take the actions necessary to repair the Network Element when trouble is found. AT&T will repair its network facilities to its wholesale customers in the same time frames that AT&T repairs similar services to its retail customers.

1.15.3 If TWTC reports a trouble on a AT&T Network Element and no trouble is found in AT&T's network, AT&T will charge TWTC a Maintenance of Service Charge for any dispatching and testing (both inside and outside the CO) required by AT&T in order to confirm the Network Element's working status. AT&T will assess the applicable Maintenance of Service rates from AT&T's FCC No.1 Tariff, Section 13.3.1. If TWTC reports the same trouble on the same UNE loop within thirty (30) calendar days of AT&T's notification to TWTC of its disposition of the prior trouble, and AT&T is able to determine that such trouble does exist on AT&T's network, TWTC shall be credited on the next billing cycle for charges associated with the prior trouble.

1.15.4 In the event AT&T must dispatch to the customer's location more than once due to incorrect or incomplete information provided by TWTC (e.g., incomplete address, incorrect contact name/number, etc.), AT&T will bill TWTC for each additional dispatch required to repair the Network Element due to the incorrect/incomplete information provided. AT&T will assess the applicable Maintenance of Service rates from AT&T's FCC No.1 Tariff, Section 13.3.1.

2 Loops

2.1 General. The local loop Network Element is defined as a transmission facility that AT&T provides pursuant to this Attachment between a distribution frame (or its equivalent) in AT&T's central office and the loop demarcation point at a customer premises (Loop). Facilities that do not terminate at a demarcation point at a customer premises, including, by way of example, but not limited to, facilities that terminate to another carrier's switch or premises, a cell site, Mobile Switching Center or base station, do not constitute local Loops except to the extent that a carrier may require loops to such locations for the purpose of providing telecommunications services to its personnel at those locations. The Loop Network Element includes all features, functions, and capabilities of the transmission facilities, including the network interface device, and attached electronics (except those used for the provision of advanced services, such as Digital Subscriber Line Access Multiplexers (DSLAMs)), optronics and intermediate devices (including repeaters and load coils) used to establish the transmission path to the customer's premises, including inside wire owned or controlled by AT&T.

2.1.1 AT&T will provide unbundled access to Loops as required by FCC Rule 51.319(a).

2.1.2 TWTC shall purchase the entire bandwidth of the Loop and, except as required herein or as otherwise agreed to by the Parties, AT&T shall not subdivide the frequency of the Loop.

2.1.3 The loop shall include the use of all test access functionality, including without limitation, smart jacks, for both voice and data.

2.1.4 Where facilities are available, AT&T will install Loops in compliance with AT&T's Products and Services Interval Guide available at AT&T's Interconnection Web site. For orders of fifteen (15) or more Loops, the installation and any applicable Order Coordination (OC) as described below will be handled on a project basis, and the intervals will be set by the AT&T project manager for that order. When Loops require a Service Inquiry (SI) prior to issuing the order to determine if facilities are available, the interval for the SI process is separate from the installation interval.

2.1.5 The Loop shall be provided to TWTC in accordance with AT&T's TR73600 Unbundled Local Loop Technical Specification and applicable industry standard technical references.

2.1.6 AT&T will only provision, maintain and repair the Loops to the standards that are consistent with the type of Loop ordered.

2.1.7 When a AT&T technician is required to be dispatched to provision the Loop, AT&T will tag the Loop with the Circuit ID number and the name of the ordering CLEC. When a dispatch is not required to provision the Loop, AT&T will tag the Loop on the next required visit to the customer's location. If TWTC wants to ensure the Loop is tagged during the provisioning process for Loops that may not require a dispatch (e.g., UVL-SL1, UVL-SL2, and UCL-ND), TWTC may order Loop Tagging. Rates for Loop Tagging are as set forth in Exhibit A.

2.1.8 For voice grade Loop orders (or orders for Loops intended to provide voice grade services), TWTC shall have dial-tone available for that Loop forty-eight (48) hours prior to the Loop order completion due date. This applies to all conversions from one provider to another provider as well as Service Rearrangements as set forth in Section 2.10. Where TWTC dial-tone is not available on the conversion date the Loop will not be cut over and the Loop order will be returned to TWTC for rescheduling.

2.1.9 The Loop does not include any packet switched features, functions or capabilities.

2.2 Fiber to the Home (FTTH) loops are local loops consisting entirely of fiber optic cable, whether dark or lit, serving a customer's premises or, in the case of predominantly residential multiple dwelling units (MDUs), a fiber optic cable, whether dark or lit, that extends to the MDU minimum point of entry (MPOE).

Fiber to the Curb (FTTC) loops are local loops consisting of fiber optic cable connecting to a copper distribution plant that is not more than five hundred (500) feet from the customer's premises or, in the case of predominantly residential MDUs, not more than five hundred (500) feet from the MDU's MPOE. The fiber optic cable in a FTTC loop must connect to a copper distribution plant at a serving area interface from which every other copper distribution subloop also is not more than five hundred (500) feet from the respective customer's premises.

2.2.1 In new build (Greenfield) areas, where AT&T has only deployed FTTH/FTTC facilities, AT&T is under no obligation to provide FTTH/FTTC Loops. FTTH facilities include fiber loops deployed to the MPOE of a MDU that is predominantly residential regardless of the ownership of the inside wiring from the MPOE to each customer in the MDU.

2.2.2 In FTTH/FTTC overbuild situations where AT&T also has copper Loops, AT&T will make those copper Loops available to TWTC on an unbundled basis, until such time as AT&T chooses to retire those copper Loops using the FCC's network disclosure requirements. In these cases, AT&T will offer a sixty-four (64) kilobits per second (kbps) voice grade channel over its FTTH/FTTC facilities.

2.2.2.1 Notwithstanding the foregoing, AT&T shall make available DS1 and DS3 Loops in any wire center where AT&T is required to provide such Loop facilities.

2.2.2.2 Furthermore, in FTTH/FTTC overbuild areas where AT&T has not yet retired copper facilities, AT&T is not obligated to ensure that such copper Loops in that area are capable of transmitting signals prior to receiving a request for access to such Loops by TWTC. If a request is received by AT&T for a copper Loop, and the copper facilities have not yet been retired, AT&T will restore the copper Loop to serviceable condition if technically feasible. Except for the state of Georgia, in these instances of Loop orders in an FTTH/FTTC overbuild area, AT&T's standard Loop provisioning interval will not apply, and the order will be handled on a project basis by which the Parties will negotiate the applicable provisioning interval. For the state of Georgia, in these instances of Loop orders in an FTTH/FTTC overbuild area, AT&T's standard Loop provisioning interval will apply.

2.3 A hybrid Loop is a local Loop, composed of both fiber optic cable, usually in the feeder plant, and copper twisted wire or cable, usually in the distribution plant. AT&T shall provide TWTC access to hybrid Loops pursuant to the requirements of 47 C.F.R. § 51.319(a)(2). AT&T is not required to provide access to the packet switched features, functions and capabilities of its hybrid Loops.

2.4 AT&T shall not engineer the transmission capabilities of its network in a manner, or engage in any policy, practice, or procedure, that disrupts or degrades access to a local Loop or Subloop, including the time division multiplexing-based features, functions and capabilities of a hybrid Loop, for which a requesting

telecommunications carrier may obtain or has obtained access pursuant to this Attachment.

2.5 DS1 and DS3 Loop Requirements

2.5.1 For purposes of this Section 2, a Business Line is defined in 47 C.F.R. § 51.5.

2.5.2 For purposes of this Section 2, a "Fiber-Based Collocator" is defined in 47 C.F.R. § 51.5.

2.5.3 Building is defined as a permanent physical structure including, but not limited to, a structure in which people reside, or conduct business or work on a daily basis and through which there is one centralized point of entry in the structure through which all telecommunications services must transit. With respect to multi-tenant property with a single street address, an individual tenant's space shall constitute one Building for purposes of this Attachment if: (1) the multi-tenant structure is subject to separate ownership of each tenant's space; or (2) if the multi-tenant structure is under single ownership and there is no centralized point of entry through which all telecommunications service must transit. As an example only, a high rise office building with a general telecommunications equipment room through which all telecommunications services to that building's tenants must pass would be a single Building for purposes of this Attachment 2. Two or more physical areas served by individual points of entry through which telecommunications services must transit will be considered separate Buildings. For instance, a strip mall with individual businesses obtaining telecommunications services from different access points on the Buildings(s) will be considered individual Buildings, even though they might share common walls.

2.5.4 Notwithstanding anything to the contrary in this Agreement, AT&T shall make available DS1 and DS3 Loops as described in this Agreement, except in any wire center meeting the criteria described below:

2.5.4.1 DS1 Loops at any Building within the service area of a wire center containing sixty thousand (60,000) or more Business Lines and four (4) or more fiber-based collocators.

2.5.4.2 DS3 Loops at any Building within the service area of a wire center containing thirty-eight thousand (38,000) or more Business Lines and four (4) or more fiber-based collocators.

2.5.5 The Master List of Unimpaired Wire Centers and AT&T's List of Unimpaired Wire Centers as described in Section 1.9 sets forth the list of wire centers meeting the criteria set forth in Sections 2.5.4.1 and 2.5.4.2 above as of March 11, 2005.

2.5.6 Once any wire center exceeds both of the thresholds set forth in Section 2.5.4.1 above, no future DS1 Loop unbundling will be required in that wire center.

2.5.7 Once any wire center exceeds both of the thresholds set forth in Section 2.5.4.2 above, no future DS3 Loop unbundling will be required in that wire center.

2.5.8 Modifications and Updates to the Wire Center Lists and Subsequent Transition Periods

2.5.8.1 In the event AT&T identifies additional wire centers that meet the criteria set forth in Section 2.5.4 above but that were not included in the Master List of Unimpaired Wire Centers and AT&T's List of Unimpaired Wire Centers, AT&T shall include such additional wire centers in a carrier notification letter (CNL). Each such list of additional wire centers shall be considered a "Subsequent Wire Center List". AT&T will follow any limitations on the frequency with which it may issue such lists and notification procedures set forth in applicable Commission orders.

2.5.8.2 TWTC shall have thirty (30) business days to dispute the additional wire centers listed on AT&T's CNL. Absent such dispute, effective thirty (30) business days after the date of a AT&T CNL providing a Subsequent Wire Center List, AT&T shall not be required to unbundle DS1 and/or DS3 Loops, as applicable, in such additional wire center(s), except pursuant to the self-certification process as set forth in Section 1.9.1 of this Attachment.

2.5.8.3 For purposes of Section 2.5.8.1 above, AT&T shall make available DS1 and DS3 Loops that were in service for TWTC in a wire center on the Subsequent Wire Center List as of the thirtieth (30th) business day after the date of AT&T's CNL identifying the Subsequent Wire Center List (Subsequent Embedded Base) until one hundred eighty (180) days after the thirtieth (30th) business day from the date of AT&T's CNL identifying the Subsequent Wire Center List (Subsequent Transition Period).

2.5.8.4 The rates set forth in Exhibit B shall apply to the Subsequent Embedded Base during the Subsequent Transition Period.

2.5.8.5 No later than one hundred eighty (180) days from AT&T's CNL identifying the Subsequent Wire Center List, TWTC shall submit an LSR(s) or spreadsheet(s) as applicable, identifying the Subsequent Embedded Base of circuits to be disconnected or converted to other AT&T services.

2.5.8.5.1 In the case of disconnection, the applicable disconnect charges set forth in this Agreement shall apply.

2.5.8.5.2 If TWTC chooses to convert DS1 and/or DS3 Loops in existence as of the Effective Date of this Agreement to special access circuits, AT&T will include such DS1 and DS3 Loops within TWTC's total special access circuits, and apply any discounts to which TWTC is entitled from the transition period of 3/11/2006 to the conversion date. Conversions will be subject to the switch-as-is charge set forth in Exhibit A to this Attachment 2.

2.5.8.5.3 AT&T shall not impose disconnect or nonrecurring installation charges when transitioning the Subsequent Embedded Base of DS1 and DS3 Loops in existence as of the Effective Date of this Agreement.

2.5.8.6 If TWTC fails to submit the LSR(s) or spreadsheet(s) for all of its Subsequent Embedded Base by one hundred eighty (180) days after the date of AT&T's CNL identifying the Subsequent Wire Center List, AT&T will identify TWTC's remaining Subsequent Embedded Base, if any, and will transition such circuits to the equivalent tariffed AT&T service(s), or in the case of Georgia, to the equivalent 271 service(s) set forth in Exhibit 1. In the states of Florida, Kentucky, Mississippi and South Carolina, those circuits identified and transitioned by AT&T shall be subject to the applicable disconnect charges as set forth in this Agreement and the full nonrecurring charges for installation of the equivalent tariffed AT&T service as set forth in AT&T's tariffs. In the states of Alabama, Georgia, North Carolina and Tennessee, those circuits identified and transitioned by AT&T shall be subject to the applicable switch-as-is rates set forth in Exhibit A of Attachment 2. In the state of Louisiana, those circuits identified and transitioned by AT&T shall be subject to the full nonrecurring charges for installation of the equivalent tariffed AT&T service as set forth in AT&T's tariffs.

2.5.8.7 For Subsequent Embedded Base circuits converted pursuant to Section 2.5.8.5 above or transitioned pursuant to Section 2.5.8.6 above, the applicable recurring tariff charges shall apply as of the earlier of the date each circuit is converted or transitioned, as applicable, or the first day after the end of the Subsequent Transition Period.

2.5.8.8 The Subsequent Embedded Base facilities converted by AT&T pursuant to Section 2.5.8.5 or Section 2.5.8.6 above shall be converted in a manner that avoids, or otherwise minimizes, to the extent possible, disruption or degradation to TWTC's customers.

2.6 Where facilities are available, AT&T will install Loops in compliance with AT&T's Products and Services Interval Guide, such Guide being consistent with Section 30.2.1 of the General Terms and Conditions, available at AT&T's Interconnection Web site. For orders of fifteen (15) or more Loops, the installation and any applicable Order Coordination (OC) as described below will be handled on a project basis, and the intervals will be set by the AT&T project manager for that order. When Loops require a Service Inquiry (SI) prior to issuing the order to determine if facilities are available, the interval for the SI process is separate from the installation interval.

2.6.1 The Loop shall be provided to TWTC in accordance with AT&T's TR73600 Unbundled Local Loop Technical Specification and applicable industry standard technical references.

2.6.2 AT&T will only provision, maintain and repair the Loops to the standards that are consistent with the type of Loop ordered.

2.6.3 When a AT&T technician is required to be dispatched to provision the Loop, AT&T will tag the Loop with the Circuit ID number and the name of the ordering CLEC. When a dispatch is not required to provision the Loop, AT&T will tag the Loop on the next required visit to the customer's location. If TWTC wants to ensure the Loop is tagged during the provisioning process for Loops that may not require a dispatch (e.g., UVL-SL1, UVL-SL2, and UCL-ND), TWTC may order Loop Tagging. Rates for Loop Tagging are as set forth in Exhibit A.

2.7 Order Coordination (OC) and Order Coordination-Time Specific (OC-TS)

2.7.1 OC allows AT&T and TWTC to coordinate the installation of the SL2 Loops, Unbundled Digital Loops (UDL) and other Loops where OC may be purchased as an option, to TWTC's facilities to limit customer service outage. OC is available when the Loop is provisioned over an existing circuit that is currently providing service to the customer. OC for physical conversions will be scheduled at AT&T's discretion during normal working hours on the committed due date. OC shall be provided in accordance with the chart set forth below.

2.7.2 OC-TS allows TWTC to order a specific time for OC to take place. AT&T will make commercially reasonable efforts to accommodate TWTC's specific conversion time request. However, AT&T reserves the right to negotiate with TWTC a conversion time based on load and appointment control when necessary. This OC-TS is a chargeable option for all Loops except Unbundled Copper Loops (UCL) and is billed in addition to the OC charge. TWTC may specify a time between 9:00 a.m. and 4:00 p.m. (location time) Monday through Friday (excluding holidays). If TWTC specifies a time outside this window, or selects a time or quantity of Loops that requires AT&T technicians to work outside normal work hours, overtime charges will apply in addition to the OC and OC-TS charges. Overtime charges will be applied based on the amount of overtime worked and in accordance with the rates established in AT&T's intrastate Access Services Tariff, Section E13.2, for each state. The OC-TS charges for an order due on the same day at the same location will be applied on a per LSR basis.

2.7.3 For a coordinated conversion, i.e., to LNP with loop or to stand alone loop where OC is provided for in this agreement, AT&T shall verbally coordinate the disconnect with TWTC and perform any switch translations so as to limit customer service outage. When OC is provided, AT&T will call TWTC twenty-four (24) to forty-eight (48) hours prior to the actual conversion to ensure TWTC will be ready on the due date and to review the details of the cutover. TWTC may designate the conversion time when the conversion involves a loop with LNP by ordering Time Specific conversion at rates designated in this agreement. For Time Specific conversions, AT&T and TWTCshall mutually agree upon cut over time and AT&T will verify the cut over time designated by TWTC twenty-four (24) to forty-eight

(48) hours in advance to ensure that the conversion is to be completed as ordered. Both Parties will use best efforts to ensure that conversions will commence within fifteen (15) minutes of the established time, with the exception of conversions involving IDLC where the Commission has granted extended conversion windows. For coordinated conversions, AT&T's target interval for service disruption to the customer is fifteen (15) minutes or less.

	Order Coordination (OC)	**Order Coordination – Time Specific (OC-TS)**	**Test Points**	**DLR**	**Charge for Dispatch and Testing if No Trouble Found**
SL-1 **(Non-Designed)**	Chargeable Option	Chargeable Option	Not available	Chargeable Option – ordered as Engineering Information Document	Charged for Dispatch inside and outside Central Office
UCL-ND **(Non-Designed)**	Chargeable Option	Not Available	Not Available	Chargeable Option – ordered as Engineering Information Document	Charged for Dispatch inside and outside Central Office
Unbundled Voice Loops - SL-2 (including 2- and 4-wire UVL) (Designed)	Included	Chargeable Option	Included	Included	Charged for Dispatch outside Central Office
Unbundled Digital Loop (Designed)	Included	Chargeable Option	Included (where appropriate)	Included	Charged for Dispatch outside Central Office
Unbundled Copper Loop (Designed)	Chargeable in accordance with Section 2	Not available	Included	Included	Charged for Dispatch outside Central Office
For UVL-SL1 and UCLs, TWTC must order and will be billed for both OC and OC-TS if requesting OC-TS.					

2.8 <u>CLEC to CLEC Conversions for Unbundled Loops</u>

2.8.1 The CLEC to CLEC conversion process for Loops may be used by TWTC when converting an existing Loop from another CLEC for the same customer. The

Loop type being converted must be included in TWTC's Agreement before requesting a conversion.

2.8.2 To utilize the CLEC to CLEC conversion process, the Loop being converted must be the same Loop type with no requested changes to the Loop, must serve the same customer location from the same serving wire center, and must not require an outside dispatch to provision.

2.8.3 The Loops converted to TWTC pursuant to the CLEC to CLEC conversion process shall be provisioned in the same manner and with the same functionality and options as described in this Agreement for the specific Loop type.

2.9 Bulk Migration

2.9.1 AT&T will make available to TWTC a Bulk Migration process pursuant to which TWTC may request to migrate port/loop combinations, provisioned pursuant to a separate agreement between the parties, to Loops (UNE-L). The Bulk Migration process may be used if such loop/port combinations are (1) associated with two (2) or more Existing Account Telephone Numbers (EATNs); and (2) located in the same Central Office. The terms and conditions for use of the Bulk Migration process are described in the AT&T CLEC Information Package. The CLEC Information Package is located on AT&T's Interconnection Web site. The rates for the Bulk Migration process shall be the nonrecurring rates associated with the Loop type being requested on the Bulk Migration, as set forth in Exhibit A. Additionally, OSS charges will also apply. Loops connected to Integrated Digital Loop Carrier (IDLC) systems will be migrated pursuant to Section 2.16 below.

2.9.1.1 Should TWTC request migration for two (2) or more EATNs containing fifteen (15) or more circuits, TWTC must use the Bulk Migration process referenced in Section 2.9.1 above.

2.10 Unbundled Loop (DS1 and below) Service Rearrangements

2.10.1 The Unbundled Loop Service Rearrangement processes will allow changes to be made to a working Loop facility assignment within the same end-user serving wire center. Service Rearrangements will result in service outages to the customer during the time the Loop is being moved.

2.10.2 An Unbundled Loop Service Rearrangement connecting facility change (CFC) allows TWTC to change its installed Loop from one working facility assignment to another facility assignment. CFC includes Connecting Facility Assignment (CFA) and Cable ID & Pair changes within same collocation arrangement or from collocation to collocation. CFA changes are allowed within the same multiplexer or from one multiplexer to another multiplexer. For a CFC, the Loop class of service, Loop type and the customer must remain the same.

2.10.3 An Unbundled Loop Service Rearrangement connecting facility move (CFM) allows TWTC to move the Loop facility assignment from a collocation arrangement to a multiplexer or from a multiplexer to a collocation arrangement. CFMs require a change to the Loop basic class of service. The Loop type and the customer must remain the same.

2.10.4 For Unbundled Loop Service Rearrangements, AT&T shall charge the applicable "Service Rearrangement change in Loop facility" rate found in Exhibit A.

2.10.5 The Unbundled Loop Service Rearrangement process and requirements will be handled in accordance with the guidelines set forth in the Ordering Guidelines and CLEC Information Packages as referenced in Sections 1.14.1 and 1.14.2 above.

2.11 EEL to Loop Retermination

2.11.1 TWTC may utilize the EEL to Loop Retermination process to disconnect an EEL circuit and reterminate the Loop portion of the former EEL circuit to a collocation arrangement in the end-user's Serving Wire Center (EU SWC).

2.11.2 This process is available when the existing Loop portion of the EEL will be re-used and the resulting Loop will be subject to the rates, terms and conditions for that particular Loop as set forth in this Attachment. This process will apply only to EELs that include as a part of its combination a DS1 Loop, UVL-SL2 Loop, 4-Wire UDL Loop (64, 56 kbs) and a 2-Wire ISDN Loop.

2.11.3 AT&T shall charge the applicable EEL to Loop Retermination rates found in Exhibit A. TWTC shall also be charged applicable manual service order, collocation cross-connect and EEL (including the Transport and Loop portions of the EEL) disconnect charges as set forth in Exhibit A of this Attachment.

2.11.4 The EEL to Loop Retermination process is not available when a dispatch outside the serving wire center where the Loop terminates is required. If an outside dispatch is required, or if the Loop portion of the EEL is not one of the Loop types referenced in Section 2.11.2 above, or if TWTC elects not to utilize the EEL to Loop Retermination process, TWTC must submit an LSR to disconnect the entire EEL circuit, and must submit a separate LSR for the requested standalone Loop. In such cases, TWTC will be charged the EEL disconnect charges and the full nonrecurring rates for installation of a new Loop, as set forth in Exhibit A.

2.11.5 The EEL to Loop Retermination process and requirements will be handled in accordance with the guidelines set forth in the Ordering Guidelines and CLEC Information Packages as referenced in Sections 1.14.1 and 1.14.2 above.

2.12 Unbundled Voice Loops (UVLs)

2.12.1 AT&T shall make available the following UVLs:

2.12.1.1 2-wire Analog Voice Grade Loop – SL1 (Non-Designed);

2.12.1.2 2-wire Analog Voice Grade Loop – SL2 (Designed); or

2.12.1.3 4-wire Analog Voice Grade Loop (Designed).

2.12.2 UVL may be provisioned using any type of facility that will support voice grade services. This may include loaded copper, non-loaded copper, digital loop carrier systems, fiber/copper combination (hybrid loop) or a combination of any of these facilities. AT&T, in the normal course of maintaining, repairing, and configuring its network, may also change the facilities that are used to provide any given voice grade circuit. This change may occur at any time and shall result in no voice grade service disruption or degradation to the customer. In these situations, AT&T will only ensure that the newly provided facility will support voice grade services. AT&T will not guarantee that TWTC will be able to continue to provide any advanced services over the new facility. AT&T will offer UVL in two different service levels - Service Level One (SL1) and Service Level Two (SL2).

2.12.3 Unbundled Voice Loop - SL1 (UVL-SL1). Loops are 2-wire loop start circuits, will be non-designed, and will not have remote access test points. OC will be offered as a chargeable option on SL1 Loops when reuse of existing facilities has been requested by TWTC, however, OC is always required on UCLs that involve the reuse of facilities that are currently providing service. TWTC may also order OC-TS when a specified conversion time is requested. OC-TS is a chargeable option for any coordinated order and is billed in addition to the OC charge. An Engineering Information (EI) document can be ordered as a chargeable option. The EI document provides Loop Make-Up information which is similar to the information normally provided in a Design Layout Record (DLR). Upon issuance of a non-coordinated order in the service order system, SL1 Loops will be activated on the due date in the same manner and time frames that AT&T normally activates POTS-type Loops for its customers. For SL1 orders that include the OC option, AT&T will use best efforts to notify TWTC within thirty (30) minutes of the completion of the physical wire work.

2.12.4 For an additional charge AT&T will make available Loop Testing so that TWTC may request further testing on new UVL-SL1 Loops. Rates for Loop Testing are as set forth in Exhibit A.

2.12.5 Unbundled Voice Loop – SL2 (UVL-SL2). Loops may be 2-wire or 4-wire circuits, shall have remote access test points, and will be designed with a DLR provided to TWTC. SL2 circuits can be provisioned with loop start, ground start or reverse battery signaling. OC is provided as a standard feature on SL2 Loops. The OC feature will allow TWTC to coordinate the installation of the Loop with the disconnect of an existing customer's service and/or number portability service. In these cases, AT&T will perform the order conversion with standard order coordination at its discretion during normal work hours.

2.13 Unbundled Digital Loops

2.13.1 AT&T will offer UDLs. UDLs are service specific, will be designed, will be provisioned with test points (where appropriate), and will come standard with OC and a DLR. The various UDLs are intended to support a specific digital transmission scheme or service.

2.13.2 AT&T shall make available the following UDLs, subject to restrictions set forth herein:

2.13.2.1 2-wire Unbundled ISDN Digital Loop;

2.13.2.2 2-wire Unbundled ADSL Compatible Loop;

2.13.2.3 2-wire Unbundled HDSL Compatible Loop;

2.13.2.4 4-wire Unbundled HDSL Compatible Loop;

2.13.2.5 4-wire Unbundled DS1 Digital Loop;

2.13.2.6 4-wire Unbundled Digital Loop/DS0 – 64 kbps, 56 kbps and below;

2.13.2.7 DS3 Loop; or

2.13.2.8 STS-1 Loop.

2.13.3 2-wire Unbundled ISDN Digital Loops. These will be provisioned according to industry standards for 2-Wire Basic Rate ISDN services and will come standard with a test point, OC, and a DLR. TWTC will be responsible for providing AT&T with a Service Profile Identifier (SPID) associated with a particular ISDN-capable Loop and customer. With the SPID, AT&T will be able to adequately test the circuit and ensure that it properly supports ISDN service. When ISDN loops are provisioned using a Digital Loop Carrier (DLC) system, AT&T will ensure that the loops are provisioned on time slots that are compatible with data-only services such as IDSL.

2.13.4 2-wire ADSL-Compatible Loop. This is a designed Loop that is provisioned according to Revised Resistance Design (RRD) criteria and may be up to eighteen thousand (18,000) feet long and may have up to six thousand (6,000) feet of bridged tap (inclusive of Loop length). The Loop is a 2-wire circuit and will come standard with a test point, OC, and a DLR.

2.13.5 2-wire or 4-wire HDSL-Compatible Loop. This is a designed Loop that meets Carrier Serving Area (CSA) specifications, may be up to twelve thousand (12,000) feet long and may have up to twenty-five hundred (2,500) feet of bridged tap (inclusive of Loop length). It may be a 2-wire or 4-wire circuit and will come standard with a test point, OC, and a DLR.

2.13.6 4-wire Unbundled DS1 Digital Loop. This is a designed 4-wire Loop that is provisioned according to industry standards for DS1 or Primary Rate ISDN services and will come standard with a test point, OC, and a DLR. A DS1 Loop may be provisioned over a variety of loop transmission technologies including copper, HDSL-based technology or fiber optic transport systems. It will include a 4-wire DS1 Network Interface at the customer's location.

2.13.7 For the purposes of AT&T's unbundling obligations pursuant to this Agreement, for the states of Alabama, Florida, Kentucky, Mississippi, South Carolina and Tennessee, DS1 Loops include 2-wire and 4-wire HDSL Compatible Loops.

2.13.8 AT&T shall not provide more than ten (10) unbundled DS1 Loops to TWTC at any single Building in which DS1 Loops are available as unbundled Loops.

2.13.9 4-wire Unbundled Digital/DS0 Loop. These are designed 4-wire Loops that may be configured as sixty-four (64)kbps, fifty-six (56)kbps, nineteen (19)kbps, and other sub-rate speeds associated with digital data services and will come standard with a test point, OC, and a DLR.

2.13.10 DS3 Loop. DS3 Loop is a two-point digital transmission path which provides for simultaneous two-way transmission of serial, bipolar, return-to-zero isochronous digital electrical signals at a transmission rate of forty-four point seven thirty-six (44.736) megabits per second (Mbps) that is dedicated to the use of the ordering CLEC. It may provide transport for twenty-eight (28) DS1 channels, each of which provides the digital equivalent of twenty-four (24) analog voice grade channels. The interface to unbundled dedicated DS3 transport is a metallic-based electrical interface. For the purpose of AT&T's unbundling obligations pursuant to this Agreement, DS3 Loops include STS-1 Loops.

2.13.11 STS-1 Loop. STS-1 Loop is a high-capacity digital transmission path with SONET VT1.5 mapping that is dedicated for the use of the ordering customer. It is a two-point digital transmission path which provides for simultaneous two-way transmission of serial bipolar return-to-zero synchronous digital electrical signals at a transmission rate of fifty-one point eighty-four (51.84) Mbps. It may provide transport for twenty-eight (28) DS1 channels, each of which provides the digital equivalent of twenty-four (24) analog voice grade channels. The interface to unbundled dedicated STS-1 transport is a metallic-based electrical interface.

2.13.12 Both DS3 Loop and STS-1 Loop require a SI in order to ascertain availability.

2.13.13 DS3 services come with a test point and a DLR. Mileage is airline miles, rounded up and a minimum of one (1) mile applies. AT&T's TR73501 LightGate® Service Interface and Performance Specifications, Issue D, June 1995 applies to DS3 services.

2.13.14 TWTC may obtain a maximum of a single Unbundled DS3 Loop to any single Building in which DS3 Loops are available as Unbundled Loops.

2.14 Unbundled Copper Loops (UCL). AT&T shall make available UCLs. The UCL is a copper twisted pair Loop that is unencumbered by any intervening equipment (e.g., filters, load coils, range extenders, digital loop carrier, or repeaters) and is not intended to support any particular telecommunications service. The UCL will be offered in two (2) types – Designed and Non-Designed.

2.14.1 Unbundled Copper Loop – Designed (UCL-D) The UCL-D will be provisioned as a dry copper twisted pair (2-wire or 4-wire) Loop that is unencumbered by any intervening equipment (e.g., filters, load coils, range extenders, digital loop carrier, or repeaters).

2.14.1.1 A UCL-D will be eighteen thousand (18,000) feet or less in length and is provisioned according to Resistance Design parameters, may have up to six thousand (6,000) feet of bridged tap and will have up to thirteen hundred (1300) Ohms of resistance.

2.14.1.2 The UCL-D is a designed circuit, is provisioned with a test point, and comes standard with a DLR. OC is a chargeable option for a UCL-D; however, OC is always required on UCLs where a reuse of existing facilities has been requested by TWTC.

2.14.1.3 These Loops are not intended to support any particular services and may be utilized by TWTC to provide a wide-range of telecommunications services as long as those services do not adversely affect AT&T's network. This facility will include a Network Interface Device (NID) at the customer's location for the purpose of connecting the Loop to the customer's inside wire.

2.14.2 Unbundled Copper Loop – Non-Designed (UCL-ND) The UCL–ND is provisioned as a dedicated 2-wire metallic transmission facility from AT&T's Main Distribution Frame (MDF) to a customer's premises (including the NID). The UCL-ND will be a "dry copper" facility in that it will not have any intervening equipment such as load coils, repeaters, or digital access main lines (DAMLs), and may have up to six thousand (6,000) feet of bridged tap between the customer's premises and the serving wire center. The UCL-ND typically will be thirteen hundred (1300) Ohms resistance and in most cases will not exceed eighteen thousand (18,000) feet in length, although the UCL-ND will not have a specific length limitation. For Loops less than eighteen thousand (18,000) feet and with less than thirteen hundred (1300) Ohms resistance, the Loop will provide a voice grade transmission channel suitable for loop start signaling and the transport of analog voice grade signals. The UCL-ND will not be designed and will not be provisioned with either a DLR or a test point.

2.14.2.1 The UCL-ND facilities may be mechanically assigned using AT&T's assignment systems. Therefore, the Loop Makeup (LMU) process is not required to order and provision the UCL-ND. However, TWTC can request LMU for which additional charges would apply.

2.14.2.2 For an additional charge, AT&T also will make available Loop Testing so that TWTC may request further testing on the UCL-ND. Rates for Loop Testing are as set forth in Exhibit A.

2.14.2.3 UCL-ND Loops are not intended to support any particular service and may be utilized by TWTC to provide a wide-range of telecommunications services as long as those services do not adversely affect AT&T's network. The UCL-ND will include a NID at the customer's location for the purpose of connecting the Loop to the customer's inside wire.

2.14.2.4 OC will be provided as a chargeable option and may be utilized when the UCL-ND provisioning is associated with the reuse of AT&T facilities. OC-TS does not apply to this product.

2.14.2.5 TWTC may use AT&T's Unbundled Loop Modification (ULM) offering to remove excessive bridged taps and/or load coils from any copper Loop within the AT&T network. Therefore, some Loops that would not qualify as UCL-ND could be transformed into Loops that do qualify, using the ULM process.

2.15 Unbundled Loop Modifications (Line Conditioning)

2.15.1 Except for the states of Georgia, Kentucky, Louisiana, and North Carolina, , Line Conditioning is defined as routine network modification that AT&T regularly undertakes to provide xDSL services to its own customers. This may include the removal of any device, from a copper Loop or copper Subloop that may diminish the capability of the Loop or Subloop to deliver high-speed switched wireline telecommunications capability, including xDSL service. Such devices include, load coils, excessive bridged taps, low pass filters, and range extenders. Excessive bridged taps are bridged taps that serves no network design purpose and that are beyond the limits set according to industry standards and/or the AT&T's TR 73600 Unbundled Local Loop Technical Specification. AT&T shall provide Line Conditioning on Loops, as requested by TWTC, even in instances where AT&T does not provide advanced services to the end user on such Loops.

2.15.1.1 In Georgia, Kentucky, Louisiana, and North Carolina, AT&T shall perform line conditioning in accordance with FCC 47 C.F.R. § 51.319 (a)(1)(iii). Line Conditioning is as defined in FCC 47 C.F.R. § 51.319 (a)(1)(iii)(A).

2.15.2 Insofar as it is technically feasible, AT&T shall test and report troubles for all the features, functions, and capabilities of conditioned copper lines, and may not restrict its testing to voice transmission only.

2.15.3 Except for the states of Georgia, Kentucky and North Carolina, AT&T will remove load coils only on copper Loops that are equal to or less than eighteen thousand (18,000) feet in length. AT&T will remove load coils on copper subloops where the total loop distance (feeder plus distribution) from the AT&T central office to the end user is equal to or less than 18,000 feet or, if there is no copper feeder, the distance from the remote terminal (RT) to the end user is equal to or less than 18,000 feet. AT&T will remove load coils on copper loops and subloops that are greater than 18,000 feet in length upon TWTC's request at rates pursuant to AT&T's Special Construction Process contained in AT&T's FCC No. 2 as mutually agreed to by the Parties. Should AT&T begin removing load coils on loops over 18,000 feet, it will do so for TWTC at the rates set forth in Exhibit A. Should AT&T begin removing load coils on loops over 18,000 feet for other carriers other than at AT&T's Special Construction rates, it will do so for TWTC at parity under the same rates, terms, and conditions and the Parties shall amend this Agreement to include the necessary rates, terms, and conditions.

2.15.3.1 In Georgia, Kentucky and North Carolina, AT&T will remove load coils on copper loops and subloops of any length at the rates set forth in Exhibit A.

2.15.4 For any copper loop being ordered by TWTC which has over six thousand (6,000) feet of combined bridged tap will be modified, upon request from TWTC, so that the loop will have a maximum of six thousand (6,000) feet of bridged tap. This modification will be performed at no additional charge to TWTC. Loop Conditioning orders that require the removal of bridged tap that serves no network design purpose on a copper Loop that will result in a combined total of bridged tap between two thousand five hundred (2,500) and six thousand (6,000) feet will be performed at the rates set forth in Exhibit A.

2.15.5 Except for the states of Georgia, Kentucky and North Carolina, TWTC may request removal of any unnecessary and non-excessive bridged tap (bridged tap between zero (0) and two thousand five hundred (2,500) feet which serves no network design purpose), at rates pursuant to AT&T's SC Process as mutually agreed to by the Parties.

2.15.5.1 In the states of Georgia, Kentucky and North Carolina, Line Conditioning orders that require the removal of other bridged tap will be performed at the rates set forth in Exhibit A of this Attachment.

2.15.6 Rates for ULM are as set forth in Exhibit A.

2.15.7 AT&T will not modify a Loop in such a way that it no longer meets the technical parameters of the original Loop type (e.g., voice grade, ADSL, etc.) being ordered.

2.15.8 If TWTC requests ULM on a reserved facility for a new Loop order, AT&T may perform a pair change and provision a different Loop facility in lieu of the reserved

facility with ULM if feasible. The Loop provisioned will meet or exceed specifications of the requested Loop facility as modified. TWTC will not be charged for ULM if a different Loop is provisioned. For Loops that require a DLR or its equivalent, AT&T will provide LMU detail of the Loop provisioned.

2.15.9 TWTC shall request Loop make up information pursuant to this Attachment prior to submitting a service inquiry and/or a LSR for the Loop type that TWTC desires AT&T to condition.

2.15.10 When requesting ULM for a Loop that AT&T has previously provisioned for TWTC, TWTC will submit a SI to AT&T. If a spare Loop facility that meets the Loop modification specifications requested by TWTC is available at the location for which the ULM was requested, TWTC will have the option to change the Loop facility to the qualifying spare facility rather than to provide ULM. In the event that AT&T changes the Loop facility in lieu of providing ULM, TWTC will not be charged for ULM but will only be charged the service order charges for submitting an order.

2.16 Loop Provisioning Involving IDLC

2.16.1 Where TWTC has requested an Unbundled Loop and AT&T uses IDLC systems to provide the local service to the customer and AT&T has a suitable alternate facility available, AT&T will make such alternative facilities available to TWTC. If a suitable alternative facility is not available, then to the extent it is technically feasible, AT&T will implement one of the following alternative arrangements for TWTC (e.g., hairpinning):

1. Roll the circuit(s) from the IDLC to any spare copper that exists to the customer premises.
2. Roll the circuit(s) from the IDLC to an existing DLC that is not integrated.
3. If capacity exists, provide "side-door" porting through the switch.
4. If capacity exists, provide "Digital Access Cross-Connect System (DACS)-door" porting (if the IDLC routes through a DACS prior to integration into the switch).

2.16.2 Arrangements 3 and 4 above require the use of a designed circuit. Therefore, non-designed Loops such as the SL1 voice grade and UCL-ND may not be ordered in these cases.

2.16.3 If no alternate facility is available, and upon request from TWTC, and if agreed to by both Parties, AT&T may utilize its SC process to determine the additional costs required to provision facilities. TWTC will then have the option of paying the one-time SC rates to place the Loop.

2.17 Network Interface Device

2.17.1 The NID is defined as any means of interconnection of the customer's customer premises wiring to AT&T's distribution plant, such as a cross-connect device used for that purpose. The NID is a single line termination device or that portion of a multiple line termination device required to terminate a single line or circuit at the premises. The NID features two (2) independent chambers or divisions that separate the service provider's network from the customer's premises wiring. Each chamber or division contains the appropriate connection points or posts to which the service provider and the customer each make their connections. The NID provides a protective ground connection and is capable of terminating cables such as twisted pair cable.

2.17.2 AT&T shall permit TWTC to connect TWTC's Loop facilities to the customer's customer premises wiring through the AT&T NID or at any other technically feasible point.

2.17.3 Access to NID

2.17.3.1 TWTC may access the customer's premises wiring by any of the following means and TWTC shall not disturb the existing form of electrical protection and shall maintain the physical integrity of the NID:

2.17.3.1.1 AT&T shall allow TWTC to connect its Loops directly to AT&T's multi-line residential NID enclosures that have space and are not used by AT&T or any other telecommunications carriers to provide service to the premises;

2.17.3.1.2 TWTC can install the NID and cross connect to AT&T's NID itself. If TWTC decides to do so, TWTC can have AT&T install the NID or have AT&T install the NID and cross connect to AT&T's NID. To have AT&T do this installation work TWTC must submit a LSR. AT&T will perform the installation and bill TWTC a nonrecurring charge for the NID or for the NID and cross connect;

2.17.3.1.3 Where an adequate length of the customer's customer premises wiring is present and environmental conditions permit, either Party may remove the customer premises wiring from the other Party's NID and connect such wiring to that Party's own NID;

2.17.3.1.4 Either Party may enter the subscriber access chamber or dual chamber NID enclosures for the purpose of extending a cross-connect or spliced jumper wire from the customer premises wiring through a suitable "punch-out" hole of such NID enclosures; or

2.17.3.1.5 TWTC may request AT&T to make other rearrangements to the customer premises wiring terminations or terminal enclosure on a time and materials cost basis.

2.17.3.2 In no case shall either Party remove or disconnect the other Party's loop facilities from either Party's NIDs, enclosures, or protectors unless the applicable Commission has expressly permitted the same and the disconnecting Party provides prior notice to the other Party. In such cases, it shall be the responsibility of the Party disconnecting the loop facilities to leave undisturbed the existing form of electrical protection and to maintain the physical integrity of the NID. Furthermore, it shall be the responsibility of the disconnecting Party, once the other Party's loop has been disconnected from the NID, to reconnect the disconnected loop to a nationally recognized testing laboratory listed station protector, which has been grounded as per Article 800 of the National Electrical Code. If no spare station protector exists in the NID, the disconnected loop must be appropriately cleared, capped and stored.

2.17.3.3 TWTC shall not remove or disconnect ground wires from AT&T's NIDs, enclosures, or protectors.

2.17.3.4 TWTC shall not remove or disconnect NID modules, protectors, or terminals from AT&T's NID enclosures.

2.17.3.5 Due to the wide variety of NID enclosures and outside plant environments, AT&T will work with TWTC to develop specific procedures to establish the most effective means of implementing this Section if the procedures set forth herein do not apply to the NID in question.

2.17.4 Technical Requirements

2.17.4.1 The NID shall provide an accessible point of interconnection and shall maintain a connection to ground.

2.17.4.2 If an existing NID is accessed, it shall be capable of transferring electrical analog or digital signals between the customer's customer premises and the distribution media and/or cross-connect to TWTC's NID.

2.17.4.3 Existing AT&T NIDs will be operational and provided in "as is" condition. TWTC may request AT&T to do additional work to the NID on a time and material basis. When TWTC deploys its own local loops in a multiple-line termination device, TWTC shall specify the quantity of NID connections that it requires within such device.

2.17.4.4 The NID shall be equal to or better than all requirements for NIDs set forth in the applicable industry standard technical requirements.

2.18 Subloop Elements. Where facilities permit, AT&T shall offer access to its Unbundled Subloop elements in accordance with 47 C.F.R. § 51.319(b).

2.19 Unbundled Subloops Distribution (USLD) The USLD facility is a dedicated transmission facility that AT&T provides from a customer's point of demarcation to a AT&T cross-connect device. The AT&T cross-connect device may be located within a remote terminal (RT) or a stand-alone cross-box in the field or in the equipment room of a building. The USLD media is a copper twisted pair that can be provisioned as a 2-wire or 4-wire facility. AT&T will make available the following subloop distribution offerings where facilities exist:

USLD – Voice Grade (USLD-VG)
Unbundled Copper Subloop (UCSL)
USLD – Intrabuilding Network Cable (USLD-INC (aka riser cable))

2.19.1 USLD-VG is a copper subloop facility from the cross-box in the field up to and including the point of demarcation at the customer's premises and may have load coils.

2.19.2 UCSL is a copper facility eighteen thousand (18,000) feet or less in length provided from the cross-box in the field up to and including the customer's point of demarcation. If available, this facility will not have any intervening equipment such as load coils between the customer and the cross-box.

2.19.2.1 If TWTC requests a UCSL and it is not available, TWTC may request the copper Subloop facility be modified pursuant to the ULM process to remove load coils and/or excessive bridged taps. If load coils and/or excessive bridged taps are removed, the facility will be classified as a UCSL.

2.19.3 USLD-INC is the distribution facility owned or controlled by AT&T inside a building or between buildings on the same property that is not separated by a public street or road. USLD-INC includes the facility from the cross-connect device in the building equipment room up to and including the point of demarcation at the customer's premises.

2.19.3.1 Upon request for USLD-INC from TWTC, AT&T will install a cross-connect panel in the building equipment room for the purpose of accessing USLD-INC pairs from a building equipment room. The cross-connect panel will function as a single point of interconnection (SPOI) for USLD-INC and will be accessible by multiple carriers as space permits. AT&T will place cross-connect blocks in twenty five (25) pair increments for TWTC's use on this cross-connect panel. TWTC will be responsible for connecting its facilities to the twenty five (25) pair cross-connect block(s).

2.19.4 For access to Voice Grade USLD and UCSL, TWTC shall install a cable to the AT&T cross-box pursuant to the terms and conditions for physical collocation for remote sites set forth in Attachment 4. This cable would be connected by a AT&T technician within the AT&T cross-box during the set-up process. TWTC's cable

pairs can then be connected to AT&T's USL within the AT&T cross-box by the AT&T technician.

2.19.5 Through the SI process, AT&T will determine whether access to USLs at the location requested by TWTC is technically feasible and whether sufficient capacity exists in the cross-box. If existing capacity is sufficient to meet TWTC's request, then AT&T will perform the site set-up as described in the CLEC Information Package, located at AT&T's Interconnection Web site.

2.19.6 The site set-up must be completed before TWTC can order Subloop pairs. For the site set-up in a AT&T cross-connect box in the field, AT&T will perform the necessary work to splice TWTC's cable into the cross-connect box. For the site set-up inside a building equipment room, AT&T will perform the necessary work to install the cross-connect panel and the connecting block(s) that will be used to provide access to the requested USLs.

2.19.7 Once the site set-up is complete, TWTC will request Subloop pairs through submission of a LSR form to the LCSC. OC is required with USL pair provisioning when TWTC requests reuse of an existing facility, and the OC charge shall be billed in addition to the USL pair rate. For expedite requests by TWTC for Subloop pairs, expedite charges will apply for intervals less than five (5) days.

2.19.8 USLs will be provided in accordance with AT&T's TR 73600 Unbundled Local Loop Technical Specifications.

2.20 <u>Unbundled Network Terminating Wire (UNTW)</u>

2.20.1 UNTW is unshielded twisted copper wiring that is used to extend circuits from an intra-building network cable terminal or from a building entrance terminal to an individual customer's point of demarcation. It is the final portion of the Loop that in multi-subscriber configurations represents the point at which the network branches out to serve individual subscribers.

2.20.2 AT&T will provide this element in Multi-Dwelling Units (MDUs) and/or Multi-Tenants Units (MTUs) where AT&T owns, controls or leases, but only to the extent that AT&T has control by virtue of such lease, wiring all the way to the end users customer's premises. AT&T shall use commercially reasonable efforts to obtain the right to permit TWTC to access the UNTW.

2.20.3 <u>Requirements</u>

2.20.3.1 On a multi-unit premises, upon request of TWTC, AT&T will provide access to UNTW pairs on an Access Terminal that is suitable for use by multiple carriers at each Garden Terminal or Wiring Closet.

2.20.3.2 Except as otherwise required in this Attachment or as necessary for AT&T to perform its obligations under Section 2.20, AT&T shall not be required to install

new or additional UNTW beyond existing UNTW to provision the services of TWTC.

2.20.3.3 Upon receipt of the UNTW SI requesting access to AT&T's UNTW pairs at a multi-unit premises, representatives of both Parties will participate in a meeting at the site of the requested access. The purpose of the site visit will include discussion of the procedures for installation and location of the Access Terminals. By request of TWTC, an Access Terminal will be installed either adjacent to each of AT&T's Garden Terminal or inside each Wiring Closet. TWTC will deliver and connect its central office facilities to the UNTW pairs within the Access Terminal. TWTC may access any available pair on an Access Terminal. A pair is available when a pair is not being utilized to provide service or where the customer has requested a change in its local service provider to TWTC on that pair. Prior to connecting TWTC's service on a pair previously used by AT&T, TWTC will use commercially reasonable efforts to ensure the customer is no longer using AT&T's service or another CLEC's service on that pair before accessing UNTW pairs.

2.20.3.3.1 Access Terminal installation intervals will be established on an individual case basis.

2.20.3.3.2 TWTC is responsible for obtaining the property owner's permission for AT&T to install an Access Terminal(s) on behalf of TWTC. The submission of the SI by TWTC will serve as certification by TWTC that such permission has been obtained. If the property owner objects to Access Terminal installations that are in progress or within thirty (30) calendar days after completion and demands removal of Access Terminals, TWTC will be responsible for costs associated with removing Access Terminals and restoring the property to its original state prior to Access Terminals being installed TWTC shall indemnify and hold harmless AT&T against any claims of any kind that may arise out of TWTC's failure to obtain the property owner's permission.

2.20.3.3.3 TWTC will be billed for nonrecurring and recurring charges for accessing UNTW pairs at the time TWTC activates the pair(s). TWTC will notify AT&T within five (5) business days of activating UNTW pairs using the LSR form.

2.20.3.3.4 If a trouble exists on a UNTW pair, TWTC may use an alternate spare pair that serves that customer if a spare pair is available. In such cases, TWTC will re-terminate its existing jumper from the defective pair to the spare pair. Alternatively, **TWTC** will isolate and report troubles to AT&T. In such cases, TWTC must tag the UNTW pair that requires repair. If AT&T dispatches a technician on a reported trouble call and no UNTW trouble is found, AT&T will charge TWTC for time spent on the dispatch and testing the UNTW pair(s).

2.20.3.3.5 If TWTC initiates the Access Terminal installation and TWTC has not activated at least ten percent (10%) of the capacity of the Access Terminal installed pursuant to TWTC's request for an Access Terminal within six (6) months of installation of

the Access Terminal, AT&T will bill TWTC a nonrecurring charge equal to the actual cost of provisioning the Access Terminal. Once TWTC has activated at least ten percent (10%) of the capacity of the Access Terminal within six (6) months of installation of the Access Terminal, TWTC will not be billed for the placement of the Access Terminal even if the percentage of activated pairs drops at a later time below ten percent (10%) or is completely deactivated.If AT&T determines that TWTC is using the UNTW pairs without reporting the activation of the pairs, TWTC will be billed for the use of that pair back to the date the customer began receiving service from TWTC at that location. Upon request, TWTC will provide copies of its redacted billing record or installation order with sufficient information to substantiate such date. If TWTC fails to provide such records, then AT&T will bill TWTC back to the date of the Access Terminal installation.

2.21 Loop Makeup

2.21.1 Description of Service

2.21.1.1 AT&T shall make available to TWTC LMU information with respect to Loops that are required to be unbundled under this Agreement so that TWTC can make an independent judgment about whether the Loop is capable of supporting the advanced services equipment TWTC intends to install and the services TWTC wishes to provide. LMU is a preordering transaction, distinct from TWTC ordering any other service(s). Loop Makeup Service Inquiries (LMUSI) and mechanized LMU queries for preordering LMU are likewise unique from other preordering functions with associated SIs as described in this Agreement.

2.21.1.2 AT&T will provide TWTC LMU information consisting of the composition of the Loop material (copper/fiber); the existence, location and type of equipment on the Loop, including but not limited to digital loop carrier or other remote concentration devices, feeder/distribution interfaces, bridged taps, load coils, pair-gain devices; the Loop length; the wire gauge and electrical parameters.

2.21.1.3 AT&T's LMU information is provided to TWTC as it exists either in AT&T's databases or in its hard copy facility records. AT&T does not guarantee accuracy or reliability of the LMU information provided, but AT&T shall provide to TWTC the same information that it would provide to itself.

2.21.1.4 AT&T's provisioning of LMU information to the requesting CLEC for facilities is contingent upon either AT&T or the requesting CLEC controlling the Loop(s) that serve the service location for which LMU information has been requested by the CLEC. The requesting CLEC is not authorized to receive LMU information on a facility used or controlled by another CLEC unless AT&T receives a LOA from the voice CLEC (owner) or its authorized agent on the LMUSI submitted by the requesting CLEC.

2.21.1.5 TWTC may choose to use equipment that it deems will enable it to provide a certain type and level of service over a particular AT&T Loop as long as that equipment does not disrupt other services on the AT&T network. The determination shall be made solely by TWTC and AT&T shall not be liable in any way for the performance of the advanced data services provisioned over said Loop. The specific Loop type (e.g., ADSL, HDSL, or otherwise) ordered on the LSR must match the LMU of the Loop reserved taking into consideration any requisite line conditioning. The LMU data is provided for informational purposes only and does not guarantee TWTC's ability to provide advanced data services over the ordered Loop type. Furthermore, the LMU information for Loops other than copper-only Loops (e.g., ADSL, UCL-ND, etc.) that support xDSL services, is subject to change at any time due to modifications and/or upgrades to AT&T's network. Except as set forth in Section 2.21.1.6 below, copper-only Loops will not be subject to change due to modification and/or upgrades to AT&T's network and will remain on copper facilities until the Loop is disconnected by TWTC or the customer, or until AT&T retires the copper facilities via the FCC's and any applicable Commission's requirements. TWTC is fully responsible for any of its service configurations that may differ from AT&T's technical standard for the Loop type ordered.

2.21.1.6 If AT&T retires its copper facilities using 47 C.F.R § 51.325(a) requirements; or is required by a governmental agency or regulatory body to move or replace copper facilities as a maintenance procedure, AT&T will notify TWTC, according to the applicable network disclosure requirements. It will be TWTC's responsibility to move any service it may provide over such facilities to alternative facilities. If TWTC fails to move the service to alternative facilities by the date in the network disclosure notice, AT&T may terminate the service to complete the network change.

2.21.2 <u>Submitting LMUSI</u>

2.21.2.1 TWTC may obtain LMU information and reserve facilities by submitting a mechanized LMU query or a manual LMUSI according to the terms and conditions as described in the LMU CLEC Information Package, incorporated herein by reference as it may be amended from time to time or negotiated in a form of an amendment if material changes are required. The CLEC Information Package is located at the "CLEC UNE Product" on AT&T's Interconnection Web site. After obtaining the Loop information from the mechanized LMU process, if TWTC needs further Loop information in order to determine Loop service capability, TWTC may initiate a separate Manual SI for a separate nonrecurring charge as set forth in Exhibit A.

2.21.2.2 The service interval for the return of a Manual LMUSI is three (3) business days. Manual LMUSIs are not subject to expedite requests. This service interval is distinct from the interval applied to the subsequent service order.

2.21.2.3 All LSRs issued for reserved facilities shall reference the facility reservation number as provided by AT&T. TWTC will not be billed any additional LMU charges for the Loop ordered on such LSR. If, however, TWTC does not reserve facilities upon an initial LMUSI, TWTC's placement of an order for an advanced data service type facility will incur the appropriate billing charges to include SI and reservation per Exhibit A.

2.21.2.4 Where TWTC has reserved multiple Loop facilities on a single reservation, TWTC may not specify which facility shall be provisioned when submitting the LSR. For those occasions, AT&T will assign to TWTC, subject to availability, a facility that meets the AT&T technical standards of the AT&T type Loop as ordered by TWTC.

2.21.2.5 Charges for preordering manual LMUSI or mechanized LMU are separate from any charges associated with ordering other services from AT&T.

2.21.3 Loop Reservations

2.21.3.1 For a Mechanized LMUSI, TWTC may reserve up to ten (10) loop facilities. For a Manual LMUSI, TWTC may reserve up to three (3) loop facilities.

2.21.3.2 TWTC may reserve facilities for up to four (4) business days for each facility requested through LMU from the time the LMU information is returned to TWTC. During and prior to TWTC placing an LSR, the reserved facilities are rendered unavailable to other customers, including AT&T. If TWTC does not submit an LSR for a UNE service on a reserved facility within the four (4) business day reservation timeframe, the reservation of that spare facility will become invalid and the facility will be released.

3. Line Splitting

3.1 Line splitting shall mean that a provider of data services (a Data LEC) and a provider of voice services (a Voice CLEC) to deliver voice and data service to customers over the same Loop. The Voice CLEC and Data LEC may be the same or different carriers. AT&T will provide Line Splitting over a Loop (UNE-L) purchased by TWTC in accordance with 47 C.F.R. § 51.319(a)(1)(ii).

3.2 AT&T must make all necessary network modifications, including providing nondiscriminatory access to OSS necessary for pre-ordering, ordering, provisioning, maintenance and repair, and billing for Loops used in line splitting arrangements. The Parties may use the Change Control Process to address necessary OSS modifications.

3.3 Line Splitting – UNE-L. In the event TWTC provides its own switching or obtains switching from a third party, TWTC may engage in line splitting arrangements with another CLEC using a splitter, provided by TWTC, in a

Collocation Space at the central office where the loop terminates into a distribution frame or its equivalent.

3.4 Provisioning Line Splitting – UNE-L

3.4.1 The Voice CLEC provides the splitter when providing Line Splitting with UNE-L. When TWTC owns the splitter, Line Splitting requires the following: a loop from NID at the customer's location to the serving wire center and terminating into a distribution frame or its equivalent.

3.4.2 An unloaded 2-wire copper Loop must serve the customer. The meet point for the Voice CLEC and the Data LEC is the point of termination on the MDF for the Data LEC's cable and pairs.

3.4.3 To order Line Splitting utilizing UNE-L on a particular Loop, TWTC must have a DSLAM collocated in the central office that serves the customer of such Loop.

3.4.4 TWTC may purchase, install and maintain central office POTS splitters in its collocation arrangements. TWTC may use such splitters for access to its customers and to provide digital line subscriber services to its customers using the high frequency spectrum of the UNE-L. Existing Collocation rules and procedures and the terms and conditions relating to Collocation set forth in Attachment 4-Central Office shall apply.

3.5 Maintenance – Line Splitting – UNE-L

3.5.1 AT&T will be responsible for repairing voice troubles and the troubles with the physical loop between the NID at the customer's premises and the termination point.

3.5.2 TWTC shall indemnify, defend and hold harmless AT&T from and against any claims, losses, actions, causes of action, suits, demands, damages, injury, and costs including reasonable attorney fees, which arise out of actions related to the other service provider, except to the extent caused by AT&T's gross negligence or willful misconduct.

3.5.3 For the state of Alabama, the following rights are in addition to the general indemnification rights set forth above:

3.5.3.1 PROVIDED, HOWEVER, that all amounts advanced in respect of such claims, losses and costs shall be repaid to TWTC by AT&T if it shall ultimately be determined in a final judgment without further appeal by a court of appropriate jurisdiction that AT&T is not entitled to be indemnified for such claims, losses and costs because the Claims, Losses and Costs arose as a result of AT&T's gross negligence or willful misconduct.

3.5.3.2 AT&T will indemnify, defend and hold harmless TWTC from and against any Claims, Losses and Costs which arise out of actions related to the other service provider (i.e. CLEC party to the line splitting arrangement who is not TWTC brought against TWTC to the extent such Claim alleges that the cause of Claim, Loss and Cost was found to be the result of AT&T's gross negligence or willful misconduct.

3.5.3.3 PROVIDED, HOWEVER, that AT&T shall have no obligation to indemnify TWTC under this Section unless TWTC provides AT&T with prompt written notice of any such Claim; TWTC permits AT&T to assume and control the defense to such action, with counsel chosen by AT&T; and AT&T does not enter into any settlement or compromise of such Claim.

3.5.3.4 PROVIDED, HOWEVER, that all amounts advanced in respect of such Claims, Losses and Costs shall be repaid to AT&T by TWTC if it shall ultimately be determined in a final judgment without further appeal by a court of appropriate jurisdiction that TWTC is not entitled to be indemnified for such Claims, Losses and Costs because the Claims, Losses and Costs did not arises as a result of AT&T's gross negligence or willful misconduct.

3.5.3.5 Definitions:

3.5.3.5.1 "Claim" means any threatened, pending or completed action, suit or proceeding, or any inquiry or investigation that AT&T or TWTC in good faith believes might lead to the institution of any such action, suit or proceeding.

3.5.3.5.2 "Loss" means any and all damages, injuries, judgments, fines penalties, amounts paid or payable in settlement, deficiencies, and expenses (including all interest, assessments, and other charges paid or payable in connection with or respect of such Losses) incurred in connection with the Claim.

3.5.3.5.3 "Costs" means all reasonable attorney's fees and all other reasonable fees, expenses and obligations paid or incurred in connection with the Claim or related matters, including without limitation, investigating, defending, or participating (as a party, witness or otherwise) in (including on appeal), or preparing to defend or participate in any Claim.

3.6 <u>Line Splitting – Loop and Port for the states of Georgia and North Carolina only</u>

3.6.1 To the extent TWTC is using a commingled arrangement that consists of a Loop purchased pursuant to this Agreement and Local Switching provided by AT&T pursuant to Section 271, AT&T will permit TWTC to utilize Line Splitting. AT&T shall charge the applicable line splitting rates set forth in Exhibit A of this Agreement.

3.6.2 TWTC shall provide AT&T with a signed LOA between it and the third party CLEC (Data CLEC or Voice CLEC) with which it desires to provision Line Splitting services, where TWTC will not provide voice and data services.

3.6.3 Provisioning Line Splitting and Splitter Space – Loop and Port

3.6.3.1 The Data LEC, Voice CLEC, or a third party may provide the splitter. When TWTC or its authorized agent owns the splitter, Line Splitting requires the following: a non-designed analog Loop from the serving wire center to the NID at the customer's location; a collocation cross-connection connecting the Loop to the collocation space; and a second collocation cross-connection from the collocation space connected to a voice port.

3.6.3.2 An unloaded 2-wire copper Loop must serve the customer. The meet point for the Voice CLEC and the Data CLEC is the point of termination on the MDF for the Data CLEC's cable and pairs.

3.6.4 CLEC Provided Splitter – Line Splitting – Loop and Port

3.6.4.1 TWTC or its authorized agent may purchase, install and maintain central office line splitters in its collocation arrangements. TWTC or its authorized agent may use such splitters for access to its customers and to provide digital line subscriber services to its customers using the High Frequency Spectrum. Existing collocation rules and procedures and the terms and conditions relating to collocation set forth in Attachment 4-Central Office shall apply.

3.6.4.2 Any splitters installed by TWTC or its authorized agent in its collocation arrangement shall comply with ANSI T1.413, Annex E, or any future ANSI splitter standards. TWTC or its authorized agent may install any splitters that AT&T deploys or permits to be deployed for itself or any AT&T affiliate.

3.6.5 Maintenance – Line Splitting – Loop and Port

3.6.5.1 AT&T will be responsible for repairing troubles with the physical Loop between the NID at the customer's premises and the termination point.

4 Unbundled Network Element Combinations

4.1 AT&T shall provide unbundled network element combinations in accordance with 47 CFR 51.315.

4.1.1 For purposes of this Section, references to "Currently Combined" Network Elements shall mean that the particular Network Elements requested by TWTC are in fact already combined by AT&T in the AT&T network. References to "Ordinarily Combined" Network Elements shall mean that the particular Network Elements requested by TWTC are not already combined by AT&T in the location

requested by TWTC but are elements that are typically combined in AT&T's network. References to "Not Typically Combined" Network Elements shall mean that the particular Network Elements requested by TWTC are not elements that AT&T combines for its use in its network.

4.1.2 Upon request, AT&T shall perform the functions necessary to combine Network Elements that AT&T is required to provide under this Agreement in any manner, even if those elements are not ordinarily combined in AT&T's network, provided that such Combination is technically feasible and will not undermine the ability of other carriers to obtain access to Network Elements or to interconnect with AT&T's network, unless otherwise required by law.

4.1.3 To the extent TWTC requests a Combination for which AT&T does not have methods and procedures in place to provide such Combination, rates and/or methods or procedures for such Combination will be developed pursuant to the BFR process.

4.2 Rates

4.2.1 The rates for the Currently Combined Network Elements specifically set forth in Exhibit A shall be the rates associated with such Combinations. Where a Currently Combined Combination is not specifically set forth in Exhibit A, the rate for such Currently Combined Combination shall be the sum of the recurring rates for those individual Network Elements as set forth in Exhibit A and/or Exhibit B in addition to the applicable nonrecurring switch-as-is charge set forth in Exhibit A.

4.2.2 The rates for the Ordinarily Combined Network Elements specifically set forth in Exhibit A shall be the nonrecurring and recurring charges for those Combinations. Where an Ordinarily Combined Combination is not specifically set forth in Exhibit A, the rate for such Ordinarily Combined Combination shall be the sum of the recurring rates for those individual Network Elements as set forth in Exhibit A and/or Exhibit B and nonrecurring rates for those individual Network Elements as set forth in Exhibit A.

4.2.3 The rates for Not Typically Combined Combinations shall be developed pursuant to the BFR process upon request of TWTC.

4.3 Enhanced Extended Links (EELs)

4.3.1 EELs are combinations of Loops and Dedicated Transport as defined in this Attachment, together with any facilities, equipment, or functions necessary to combine those Network Elements. AT&T shall provide TWTC with EELs where the underlying Network Element are available and are required to be provided pursuant to this Agreement and in all instances where the requesting carrier meets the eligibility requirements, if applicable.

4.3.2 High-capacity EELs are (1) combinations of Loop and Dedicated Transport, (2) Dedicated Transport commingled with a wholesale loop, or (3) a Loop commingled with wholesale transport, provided that all such elements are at the DS1 and/or DS3 level as described in 47 C.F.R. § 51.318(b).

4.3.3 By placing an order for a high-capacity EEL, TWTC thereby certifies that the service eligibility criteria set forth herein are met for access to a converted high-capacity EEL, a new high-capacity EEL, or part of a high-capacity commingled EEL as a Network Element. Beginning June 29, 2010, and with respect to any period of time, either before of after such date, AT&T shall have the right to audit TWTC's high-capacity EELs as specified below. AT&T may not deny, except as set forth in Section 4.3.5 below, TWTC's request for a high-capacity EEL based upon eligibility criteria, but shall have the right to clarify the order back to TWTC rather than processing the order should the AT&T representative identify that TWTC does not have a collocation arrangement that meets the requirements of 47 C.F.R. 51.318(c).

4.3.4 <u>Service Eligibility Criteria</u>

4.3.4.1 High capacity EELs must comply with the following service eligibility requirements:

4.3.4.1.1 TWTC has received state certification to provide local voice service in the area being served or, in the absence of a state certification requirement, has complied with registration, tariffing, filing fee, or other regulatory requirements applicable to the provision of local voice service in that area;

4.3.4.1.2 For each combined circuit, including each DS1 circuit, each DS1 EEL, and each DS1-equivalent circuit on a DS3 EEL:

4.3.4.1.2.1 1) Each circuit to be provided to each customer will be assigned a local number prior to the provision of service over that circuit;

4.3.4.1.2.2 2) Each DS1-equivalent circuit on a DS3 EEL must have its own local number assignment so that each DS3 must have at least twenty-eight (28) local voice numbers assigned to it;

4.3.4.1.2.3 3) Each circuit to be provided to each customer will have 911 or E911 capability prior to provision of service over that circuit;

4.3.4.1.2.4 4) Each circuit to be provided to each customer will terminate in a collocation arrangement that meets the requirements of 47 C.F.R. § 51.318(c);

4.3.4.1.2.5 5) Each circuit to be provided to each customer will be served by an interconnection trunk over which TWTC will transmit the calling party's number in connection with calls exchanged over the trunk;

4.3.4.1.2.6 6) For each twenty-four (24) DS1 EELs or other facilities having equivalent capacity, TWTC will have at least one (1) active DS1 local service interconnection trunk over which TWTC will transmit the calling party's number in connection with calls exchanged over the trunk; and

4.3.4.1.2.7 7) Each circuit to be provided to each customer will be served by a switch capable of switching local voice traffic.

4.3.5 EEL Audit

4.3.5.1 Except for the states of Georgia, Kentucky and North Carolina, beginning June 29, 2010, and with respect to any period of time, either before of after such date, on an annual basis, AT&T may audit TWTC's records in order to verify compliance with the qualifying service eligibility criteria. To invoke the audit, AT&T will send a Notice of Audit to TWTC. Such Notice of Audit will be delivered to TWTC no less than thirty (30) days prior to the date upon which AT&T seeks to commence an audit.

4.3.5.1.1 In the states of Georgia and North Carolina, beginning June 29, 2010, and with respect to any period of time, either before of after such date, on an annual basis, and only based upon cause, AT&T may conduct an audit of TWTC's records in order to verify compliance with the high capacity EEL eligibility criteria. To invoke its limited right to audit, AT&T will send a Notice of Audit to TWTC identifying the cause upon which AT&T rests its allegations. Such Notice of Audit will be delivered to TWTC no less than thirty (30) calendar days prior to the date upon which AT&T seeks to commence an audit.

4.3.5.1.2 In the state of Kentucky beginning June 29, 2010, and with respect to any period of time, either before of after such date, to invoke its limited right to audit, AT&T will send a Notice of Audit to TWTC identifying the cause upon which AT&T rests its allegations. Such Notice of Audit will be delivered to TWTC no less than thirty (30) calendar days prior to the date upon which AT&T seeks to commence an audit. TWTC may object to the audit after it has been performed but may not prevent its initiation once AT&T asserts it has adequate documentation to support an audit. The audit should be limited to those circuits over which AT&T initially raised concern.

4.3.5.1.3 Such Notice of Audit to TWTC shall state AT&T's concern that TWTC is not complying with the service eligibility requirements as set forth above and a concise statement of the reasons therefor. AT&T is not required to provide documentation, as distinct from a statement of concern, to support its basis for an audit, or seek the concurrence of the requesting carrier before selecting the location of the audit. AT&T may select the independent auditor without the prior approval of TWTC or the Commission. Challenges to the independence of the auditor may be filed with the Commission only after the audit has been concluded.

4.3.5.2 The audit shall be conducted by a third party independent auditor retained and paid for by AT&T at a mutually agreeable location, and the audit must be performed in accordance with the standards established by the American Institute for Certified Public Accountants (AICPA) which will require the auditor to perform an "examination engagement" and issue a report regarding TWTC's compliance with the high capacity EEL eligibility criteria. AICPA standards and other AICPA requirements will be used to determine the independence of an auditor.

4.3.5.2.1 For the state of Alabama, TWTC may, however, challenge the legal qualifications of the auditor selected by filing an objection to that effect with the Commission within 10 days of receiving AT&T's Notice of Audit.

4.3.5.2.2 For the state of Florida, unless the Parties mutually agree otherwise, the audit shall be conducted by an auditor retained and paid for by AT&T from the following list of third party auditors; (1) Grant Thornton, (2) Dixon Hughes, (3) BDO Seidman, and (4) PRG Schultz. If in the selection of any of the four auditors it is determined that a conflict of interest exists with either AT&T or TWTC, the Parties may agree to waive such conflict of interest to allow the audit to proceed. If no waiver is agreed upon, or if the auditor declines a request for an audit, another auditor from the list above, subject to the same conflict and waiver process, shall be selected. If all the auditors from the list above have a conflict that is not resolved, refuse to proceed or decline such request for an audit, the Parties shall agree to another auditor.

4.3.5.2.3 In Georgia and Tennessee, AT&T may select the independent auditor without the prior approval of TWTC. If TWTC has an objection that the auditor does not meet the legal standard, then it may raise that objection with the Commission.

4.3.5.2.4 For the state of Louisiana, AT&T's notice to TWTC shall include a listing of the circuits for which AT&T alleges noncompliance, including all supporting documentation and a list of three auditors from which TWTC may choose one to conduct the audit.

4.3.5.3 The concept of materiality governs the audit. The independent auditor's report will conclude whether or the extent to which TWTC complied in all material respects with the applicable service eligibility criteria. Consistent with standard auditing practices, such audits require compliance testing designed by the independent auditor, which typically include an examination of a sample selected in accordance with the independent auditor's judgment.

4.3.5.3.1 To the extent the independent auditor's report concludes that TWTC failed to comply with the service eligibility criteria, TWTC must true-up any difference in payments, convert all noncompliant circuits to the appropriate service, and make the correct payments on a going-forward basis.

4.3.5.3.2 To the extent the independent auditor's report concludes that TWTC failed to comply in all material respects with the service eligibility criteria, TWTC shall reimburse AT&T for the cost of the independent auditor. Similarly, to the extent the independent auditor's report concludes that TWTC did comply in all material respects with the service eligibility criteria, AT&T will reimburse TWTC for its reasonable and demonstrable costs associated with the audit, including, among other things, staff time.

4.3.5.3.3 For the state of Alabama, TWTC will maintain appropriate documentation to support its certifications and may dispute any portion of the findings of an audit by petitioning the Commission for a review within twenty (20) days of receiving the reported findings of the auditor.

4.3.5.4 In the event TWTC converts special access services to Network Elements, TWTC shall be subject to the termination liability provisions in the applicable special access tariffs, if any.

5 Dedicated Transport and Dark Fiber Transport

5.1 AT&T shall offer unbundled access to Dedicated Transport in accordance with FCC Rules 47 C.F.R. §§ 51.311 and 51.319 and Section 251(c) of the Act.

5.2 A Route is defined in 47 C.F.R. § 51.319 (e) as a transmission path between one (1) of AT&T's wire centers or switches and another of AT&T's wire centers or switches. A Route between two (2) points may pass through one (1) or more intermediate wire centers or switches. Transmission paths between the same end points are the same Route, irrespective of whether they pass through the same intermediate wire centers or switches, if any.

5.3 Dedicated Transport. Dedicated Transport is defined as AT&T's transmission facilities between wire centers or switches owned by AT&T, or between wire centers or switches owned by AT&T and switches owned by TWTC, including but not limited to DS1, DS3 and OCn level services, as well as dark fiber, dedicated to TWTC. To the extent AT&T has local switching equipment, as defined by the FCC's rules, "reverse collocated" in a non-incumbent LEC premises, the transmission path back to the AT&T wire center shall constitute Dedicated Transport. AT&T shall not be required to provide access to OCn level Dedicated Transport pursuant to this Agreement.

5.4 DS1 and DS3 Dedicated Transport Requirements

5.4.1 For purposes of this Section 5.4, a Business Line is as defined in 47 C.F.R. § 51.5.

5.4.2 Notwithstanding anything to the contrary in this Agreement, AT&T shall make available Dedicated Transport as described in this Agreement, except in any wire center meeting the criteria described below:

5.4.2.1 DS1 Dedicated Transport where both wire centers at the end points of the Route contain thirty-eight thousand (38,000) or more Business Lines or four (4) or more fiber-based collocators.

5.4.2.2 DS3 Dedicated Transport where both wire centers at the end points of the Route contain twenty-four thousand (24,000) or more Business Lines or three (3) or more fiber-based collocators.

5.4.3 The Master List of Unimpaired Wire Centers and AT&T's List of Unimpaired Wire Centers, as described in Section 1.9, sets forth the list of wire centers meeting the criteria set forth in Sections 5.4.2.1 and 5.4.2.2 above as of March 11, 2005.

5.4.4 Once a wire center meets or exceeds either of the thresholds set forth in Section 5.4.2.1 above, no future DS1 Dedicated Transport unbundling will be required between that wire center and any other wire center exceeding these same thresholds.

5.4.5 Once a wire center meets or exceeds either of the thresholds set forth in Section 5.4.2.2 above, no future DS3 Dedicated Transport will be required between that wire center and any other wire center meeting or exceeding these same thresholds.

5.4.6 <u>Modifications and Updates to the Wire Center List and Subsequent Transition Periods</u>

5.4.6.1 In the event AT&T identifies additional wire centers that meet the criteria set forth in Sections 5.4.2.1 or 5.4.2.2 above, but that were not included in the Master List of Unimpaired Wire Centers or AT&T's List of Unimpaired Wire Centers, AT&T shall include such additional wire centers in a CNL. Each such list of additional wire centers shall be considered a Subsequent Wire Center List. AT&T will follow any limitations on the frequency with which it may issue such lists and notification procedures set forth in applicable Commission orders.

5.4.6.2 TWTC shall have thirty (30) business days to dispute the additional wire centers listed on AT&T's CNL. Absent such dispute, effective thirty (30) business days after the date of a AT&T CNL providing a Subsequent Wire Center List, AT&T shall not be required to provide DS1 and DS3 Dedicated Transport, as applicable, in such additional wire center(s), except pursuant to the self-certification process as set forth in Section 1.9.1 of this Attachment.

5.4.6.3 For purposes of Section 5.4.6.1 above, AT&T shall make available DS1 and DS3 Dedicated Transport that were in service for TWTC in a wire center on the Subsequent Wire Center List as of the thirtieth (30th) business day after the date of AT&T's CNL identifying the Subsequent Wire Center List (Subsequent Embedded Base) until one hundred eighty (180) days after the thirtieth (30th) business day

from the date of AT&T's CNL identifying the Subsequent Wire Center List (Subsequent Transition Period).

5.4.6.4 The rates set forth in Exhibit B shall apply to the Subsequent Embedded Base during the Subsequent Transition Period.

5.4.6.5 No later than one hundred eighty (180) days from AT&T's CNL identifying the Subsequent Wire Center List, TWTC shall submit an LSR(s) or spreadsheet(s) as applicable, identifying the Subsequent Embedded Base of circuits to be disconnected or converted to other AT&T services.

5.4.6.5.1 In the case of disconnection, the applicable disconnect charges set forth in this Agreement shall apply.

5.4.6.5.2 If TWTC chooses to convert DS1 and/or DS3 Dedicated Transport to special access circuits in existence as of the Effective Date of this Agreement, AT&T will include such DS1 and/or DS3 Dedicated Transport within TWTC's total special access circuits, and apply any discounts to which TWTC is entitled from the transition period of 3/11/2006 to the conversion date. Conversions will be subject to the switch-as-is charge set forth in Exhibit A to this Attachment 2.

5.4.6.5.3 AT&T shall not impose disconnect or nonrecurring installation charges when transitioning the Subsequent Embedded Base of DS1 and DS3 Dedicated Transport in existence as of the Effective Date of this Agreement.

5.4.6.6 If TWTC fails to submit the LSR(s) or spreadsheet(s) for all of its Subsequent Embedded Base by one hundred eighty (180) days after the date of AT&T's CNL identifying the Subsequent Wire Center List, AT&T will identify TWTC's remaining Subsequent Embedded Base, if any, and will transition such circuits to the equivalent tariffed AT&T service(s), or in the case of Georgia, to the equivalent 271 service(s) set forth in Exhibit 1. In the states of Florida, Kentucky, Mississippi and South Carolina, those circuits identified and transitioned by AT&T shall be subject to the applicable disconnect charges as set forth in this Agreement and the full nonrecurring charges for installation of the equivalent tariffed AT&T service as set forth in AT&T's tariffs. In the states of Alabama, Georgia, North Carolina and Tennessee, those circuits identified and transitioned by AT&T shall be subject to the applicable switch-as-is rates set forth in Exhibit A of Attachment 2. For the state of Louisiana, those circuits identified and transitioned by AT&T shall be subject to the applicable switch-as-is rates set forth in AT&T's tariffs.

5.4.6.7 For Subsequent Embedded Base circuits converted pursuant to Section 5.4.6.5 above or transitioned pursuant to Section 5.4.6.6 above, the applicable recurring tariff charges shall apply as of the earlier of the date each circuit is converted or transitioned, as applicable, or the first day after the end of the Subsequent Transition Period.

5.4.6.8 The Subsequent Embedded Base facilities converted by AT&T pursuant to Section 5.4.6.5 or Section 5.4.6.6 above shall be converted in a manner that avoids, or otherwise minimizes, to the extent possible, disruption or degradation to TWTC's customers.

5.4.7 AT&T shall:

5.4.7.1 Provide TWTC exclusive use of Dedicated Transport to a particular customer or carrier;

5.4.7.2 Provide all technically feasible features, functions, and capabilities of Dedicated Transport as outlined within the technical requirements of this Section;

5.4.7.3 Permit, to the extent technically feasible, TWTC to connect Dedicated Transport to equipment designated by TWTC, including but not limited to, TWTC's collocated facilities; and

5.4.7.4 Permit, to the extent technically feasible, TWTC to obtain the functionality provided by AT&T's digital cross-connect systems.

5.4.8 AT&T shall offer Dedicated Transport:

5.4.8.1 As capacity on a shared facility; and

5.4.8.2 As a circuit (i.e., DS0, DS1, DS3, STS-1) dedicated to TWTC.

5.4.9 Dedicated Transport may be provided over facilities such as optical fiber, copper twisted pair, and coaxial cable, and shall include transmission equipment such as line terminating equipment, amplifiers, and regenerators.

5.4.10 TWTC may obtain a maximum of twelve (12) unbundled DS3 Dedicated Transport circuits on each Route where DS3 Dedicated Transport is available as a Network Element, and a maximum of ten (10) unbundled DS1 Dedicated Transport circuits on each Route where there is no 251(c)(3) unbundling obligation for DS3 Dedicated Transport, but for which impairment exists for DS1 Dedicated Transport.

5.5 <u>Technical Requirements</u>

5.5.1 AT&T shall offer DS0 equivalent interface transmission rates for DS0 or voice grade Dedicated Transport. For DS1 or DS3 circuits, Dedicated Transport shall at a minimum meet the performance, availability, jitter, and delay requirements specified for Customer Interface to Central Office (CI to CO) connections in the applicable industry standards.

5.5.2 AT&T shall offer the following interface transmission rates for Dedicated Transport:

5.5.2.1 DS0 Equivalent;

5.5.2.2 DS1;

5.5.2.3 DS3;

5.5.2.4 STS-1; and

5.5.2.5 SDH (Synchronous Digital Hierarchy) Standard interface rates are in accordance with International Telecommunications Union (ITU) Recommendation G.707 and Plesiochronous Digital Hierarchy (PDH) rates per ITU Recommendation G.704.

5.5.3 AT&T shall design Dedicated Transport according to its network infrastructure. TWTC shall specify the termination points for Dedicated Transport.

5.5.4 At a minimum, Dedicated Transport shall meet each of the requirements set forth in the applicable industry technical references and AT&T Technical References:

5.5.4.1 Telcordia TR-TSY-000191 Alarm Indication Signals Requirements and Objectives, Issue 1, May 1986.

5.5.4.2 AT&T's TR73501 LightGate®Service Interface and Performance Specifications, Issue D, June 1995.

5.5.4.3 AT&T's TR73525 MegaLink®Service, MegaLink Channel Service and MegaLink Plus Service Interface and Performance Specifications, Issue C, May 1996.

5.6 Unbundled Channelization (Multiplexing)

5.6.1 To the extent TWTC is purchasing DS1 or DS3 or STS-1 Dedicated Transport pursuant to this Agreement, Unbundled Channelization (UC) provides the optional multiplexing capability that will allow a DS1 (1.544 Mbps) or DS3 (44.736 Mbps) or STS-1 (51.84 Mbps) Network Elements to be multiplexed or channelized at a AT&T central office. Channelization can be accomplished through the use of a multiplexer or a digital cross-connect system at the discretion of AT&T. Once UC has been installed, TWTC may request channel activation on a channelized facility and AT&T shall connect the requested facilities via COCIs. The COCI must be compatible with the lower capacity facility and ordered with the lower capacity facility. This service is available as defined in NECA 4. Channelization may be incorporated within dedicated transport or ordered as a stand-alone capability, which requires either the high or low speed side to be connected to collocation.

5.6.2 AT&T shall make available the following channelization systems and interfaces:

5.6.2.1 DS1 Channelization System: channelizes a DS1 signal into a maximum of twenty-four (24) DS0s. The following COCI are available: Voice Grade, Digital Data and ISDN.

5.6.2.2 DS3 Channelization System: channelizes a DS3 signal into a maximum of twenty-eight (28) DS1s. A DS1 COCI is available with this system.

5.6.2.3 STS-1 Channelization System: channelizes a STS-1 signal into a maximum of twenty-eight (28) DS1s. A DS1 COCI is available with this system.

5.6.3 AMI and B8ZS line coding with either Super Frame (SF) and Extended Super Frame (ESF) framing formats will be supported as an optional feature on DS1 facilities.

5.6.4 In the case of disconnection, the applicable disconnect charges set forth in this Agreement shall apply.

5.7 Technical Requirements. In order to assure proper operation with AT&T provided central office multiplexing functionality, TWTC's channelization equipment must adhere strictly to form and protocol standards. TWTC must also adhere to such applicable industry standards for the multiplex channel bank, for voice frequency encoding, for various signaling schemes, and for sub rate digital access.

5.8 Dark Fiber Transport. AT&T shall make Dark Fiber Transport available in accordance with FCC Rule 51.319 (e)(3). Dark Fiber Transport is defined as Dedicated Transport that consists of unactivated optical interoffice transmission facilities without attached signal regeneration, multiplexing, aggregation or other electronics.

5.8.1 AT&T shall provide access to Dark Fiber Transport for test access and testing at termination points (demarcation points) within the relevant Serving Wire Centers. For maintenance troubles after acceptance of the Dark Fiber Transport, TWTC should use the normal trouble reporting process and AT&T will isolate and correct the problem.

5.8.2 After TWTC requests Dark Fiber Transport, AT&T shall provide TWTC with the DB loss report for such Dark Fiber Transport that will reflect the engineered to DB loss.

5.8.3 TWTC may test Dark Fiber Transport obtained from AT&T using CLEC or CLEC designated personnel. AT&T shall provide appropriate interfaces to allow TWTC to test Dark Fiber Transport. For maintenance troubles after acceptance of the Dark Fiber Transport, TWTC should use the normal trouble reporting process and AT&T will isolate and correct the problem to the same engineered to DB loss levels that were met when AT&T originally provisioned the Dark Fiber Transport to TWTC or AT&T shall provide TWTC access to other existing, spare strands of Dark Fiber Transport that meet such engineered to DB loss levels.

5.8.4 AT&T shall make available in a reasonable and nondiscriminatory manner Dark Fiber Transport where it exists in AT&T's network and where, as a result of future

building or deployment, it becomes available. Dark Fiber Transport will not be deemed available if (1) it is used by AT&T for maintenance and repair purposes, (2) it is designated for use pursuant to a firm order placed by another customer, (3) it is restricted for use by all carriers, including AT&T, because of transmission problems or because it is scheduled for removal due to documented changes to roads and infrastructure, or (4) AT&T has plans to use the fiber within a two-year planning period. AT&T is not required to place fibers for Dark Fiber Transport if there are none available.

5.8.5 TWTC may test the quality of the Dark Fiber Transport to determine its usability and performance specifications.

5.8.6 AT&T shall use its best efforts to provide to TWTC information regarding the location, availability and performance of Dark Fiber Transport within ten (10) business days after receiving a request from TWTC. Within such time period, AT&T shall send written confirmation of availability of the Dark Fiber Transport.

5.8.7 If the requested Dark Fiber Transport is available, AT&T shall use its commercially reasonable efforts to provision the Dark Fiber Transport to TWTC within twenty (20) business days after TWTC submits a valid, error free LSR. Provisioning includes identification of appropriate connection points (e.g., LGX) to enable TWTC to connect TWTC provided transmission media (e.g., optical fiber) or equipment to the Dark Fiber Transport.

5.8.8 If requested dark fiber has any lightwave repeater equipment interspliced to it, AT&T will remove such equipment at TWTC's request subject to time and materials charges listed in AT&T's General Subscriber Service Tariffs.

5.8.9 If deployed in AT&T's network, on a case by case basis, AT&T may provide wave division multiplexer ("WDM") applications at rates to be negotiated by the Parties. For WDM applications, AT&T shall provide to TWTC an interface to an existing WDM device or allow TWTC to install its own WDM device (where sufficient system loss margins exist or where TWTC provides the necessary loss compensation) to multiplex the traffic at wavelengths. This applies to both the transmit and the receive ends of the Dark Fiber.

5.8.10 <u>Dark Fiber Transport Requirements</u>

5.8.10.1 For purposes of this Section 5.8, a Business Line is as defined in 47 C.F.R. § 51.5.

5.8.10.2 Notwithstanding anything to the contrary in this Agreement, AT&T shall make available Dark Fiber Transport as described in this Agreement, except in any wire center meeting the criteria described below:

5.8.10.2.1 Dark Fiber Transport where both wire centers at the end points of the Route contain twenty-four thousand (24,000) or more Business Lines or three (3) or more fiber-based collocators.

5.8.10.2.2 The Master List of Unimpaired Wire Centers or AT&T's List of Unimpaired Wire Centers, as described in Section 1.9, sets forth the list of wire centers meeting the criteria set forth in Section 5.8.10.2.1 above as of March 11, 2005.

5.8.10.2.3 Once any wire center exceeds either of the thresholds set forth in Section 5.8.10.2.1 above, no future Dark Fiber Transport unbundling will be required in that wire center.

5.8.11 Modifications and Updates to the Wire Center List and Subsequent Transition Periods

5.8.11.1 In the event AT&T identifies additional wire centers that meet the criteria set forth in Section 5.8.10.2.1 above, but that were not included in the Master List of Unimpaired Wire Centers or AT&T's List of Unimpaired Wire Centers, AT&T shall include such additional wire centers in a CNL. Each such list of additional wire centers shall be considered a "Subsequent Wire Center List". AT&T will follow any limitations on the frequency with which it may issue such lists and notification procedures in applicable Commission orders.

5.8.11.2 TWTC shall have thirty (30) business days to dispute the additional wire centers listed on AT&T's CNL. Absent such dispute, eEffective thirty (30) business days after the date of a AT&T CNL providing a Subsequent Wire Center List, AT&T shall not be required to provide unbundled access to Dark Fiber Transport, as applicable, in such additional wire center(s), except pursuant to the self-certification process as set forth in Section 1.9.1 of this Attachment.

5.8.11.3 For purposes of Section 5.8.11.1 above, AT&T shall make available Dark Fiber Transport that was in service for TWTC in a wire center on the Subsequent Wire Center List as of the thirtieth (30) business day after the date of AT&T's CNL identifying the Subsequent Wire Center List (Subsequent Embedded Base) until one hundred eighty (180) days after the thirtieth (30th) business day from the date of AT&T's CNL identifying the Subsequent Wire Center List (Subsequent Transition Period).

5.8.11.4 The rates set forth in Exhibit B shall apply to the Subsequent Embedded Base during the Subsequent Transition Period.

5.8.11.5 No later than one hundred eighty (180) days from AT&T's CNL identifying the Subsequent Wire Center List, TWTC shall submit an LSR(s) or spreadsheet(s) as applicable, identifying the Subsequent Embedded Base of circuits to be disconnected or converted to other AT&T services.

5.8.11.5.1 In the case of disconnection, the applicable disconnect charges set forth in this Agreement shall apply.

5.8.11.5.2 If TWTC chooses to convert Dark Fiber Transport and Dark Fiber Entrance Facilities to special access circuits in existence as of the Effective Date of this Agreement, AT&T will include such Dark Fiber Transport and Dark Fiber Entrance Facilities within TWTC's total special access circuits, and apply any discounts to which TWTC is entitled from the transition period of 3/11/2006 to the conversion date. Conversions will be subject to the switch-as-is charge set forth in Exhibit A to this Attachment 2.

5.8.11.5.3 In the case of disconnection, the applicable disconnect charge set forth in this Agreement shall apply. AT&T shall not impose disconnect or nonrecurring installation charges when transitioning the Subsequent Embedded Base of Dark Fiber Transport Facilities in existence as of the Effective Date of this Agreement.

5.8.11.6 If TWTC fails to submit the LSR(s) or spreadsheet(s) for all of its Subsequent Embedded Base by one hundred eighty (180) days after the date of AT&T's CNL identifying the Subsequent Wire Center List, AT&T will identify TWTC's remaining Subsequent Embedded Base, if any, and will transition such circuits to the equivalent tariffed AT&T service(s), or in the case of Georgia, to the equivalent 271 service set forth in Exhibit 1.

5.8.11.6.1 In the states of Florida, Kentucky, Mississippi and South Carolina, those circuits identified and transitioned by AT&T shall be subject to the applicable disconnect charges as set forth in this Agreement and the full nonrecurring charges for installation of the equivalent tariffed AT&T service as set forth in AT&T's tariffs. In the states of Alabama, Georgia, South Carolina and Tennessee, those circuits identified and transitioned by AT&T shall be subject to the applicable switch-as-is rates set forth in Exhibit A of Attachment 2. In the state of Louisiana, those circuits identified and transitioned by AT&T shall be subject to the full nonrecurring charges for installation of the equivalent tariffed AT&T service as set forth in AT&T's tariffs.

5.8.11.7 For Subsequent Embedded Base circuits converted pursuant to Section 5.8.11.5above or transitioned pursuant to Section 5.8.11.6 above, the applicable recurring tariff charges shall apply as of the earlier of the date each circuit is converted or transitioned, as applicable, or the first day after the end of the Subsequent Transition Period.

5.9 <u>Rearrangements</u>

5.9.1 A request to move a working TWTC Dedicated Transport circuit or a Combination including Dedicated Transport from one connecting facility assignment (CFA) to another CFA in the same AT&T Central Office (Change in

CFA), shall not constitute the establishment of new service. The applicable Rearrangement rates for the Change in CFA are set forth in Exhibit A.

5.9.2 A request to reterminate one end of a Dedicated Transport facility that is not a Change in CFA and thus results in retermination in a different AT&T Central Office (Retermination) shall constitute disconnection of existing service and the establishment of new service. Disconnect charges and full nonrecurring charges for establishment of service, as set forth in Exhibit A, shall apply.

5.9.3 Upon request of TWTC, AT&T shall project manage the Change in CFA or Retermination of Dedicated Transport and Combinations that include Dedicated Transport as described in Sections 5.9.1 and 5.9.2 above and TWTC may request OC-TS for such orders. TWTC may request OC-TS for such orders, and such OC-TS will be available at times designated by TWTC twenty-four (24) hours a day, seven (7) days a week except on National Holidays.

5.9.4 AT&T shall accept a LOA between TWTC and another carrier that will allow TWTC, in connection with a Change in CFA or Retermination, to connect Dedicated Transport or a Combination that includes Dedicated Transport, via a CFA, to the other carrier's collocation space or to another carrier's Multiplexer.

6 Automatic Location Identification/Data Management System (ALI/DMS)

6.1 <u>911 and E911 Databases</u>

6.1.1 AT&T shall provide TWTC with nondiscriminatory access to 911 and E911 databases on an unbundled basis, in accordance with 47 C.F.R. § 51.319 (f).

6.1.2 The ALI/DMS database contains end user information (including name, address, telephone information, and sometimes special information from the local service provider or end user) used to determine to which PSAP to route the call. The ALI/DMS database is used to provide enhanced routing flexibility for E911. TWTC will be required to provide the AT&T 911 database vendor daily service order updates to E911 database in accordance with Section 6.2.1 below.

6.2 <u>Technical Requirements</u>

6.2.1 AT&T's 911 database vendor shall provide TWTC the capability of providing updates to the ALI/DMS database through a specified electronic interface. TWTC shall contact AT&T's 911 database vendor directly to request interface. TWTC shall provide updates directly to AT&T's 911 database vendor on a daily basis. Updates shall be the responsibility of TWTC and AT&T shall not be liable for the transactions between TWTC and AT&T's 911 database vendor.

6.2.2 It is TWTC's responsibility to retrieve and confirm statistical data and to correct errors obtained from AT&T's 911 database vendor on a daily basis. All errors will

be assigned a unique error code and the description of the error and the corrective action is described in the CLEC Users Guide for Facility Based Providers that is found on the AT&T Interconnection Web site.

6.2.3 TWTC shall conform to the AT&T standards as described in the CLEC Users Guide to E911 for Facilities Based Providers that is located on the AT&T Interconnection Web site.

6.2.4 Stranded Unlocks are defined as end user records in AT&T's ALI/DMS database that have not been migrated for over ninety (90) days to TWTC, as a new provider of local service to the end user. Stranded Unlocks are those end user records that have been "unlocked" by the previous local exchange carrier that provided service to the end user and are open for TWTC to assume responsibility for such records.

6.2.4.1 AT&T has implemented a policy of deleting all stranded unlocks for which AT&T is the old service provider and where the new service provider has not submitted a migrate record within ninety (90) days. The submission of a migrate by TWTC locking the E911 customer record will prevent this stranded unlock record deletion. The lack of a migrate will be acknowledgement that the stranded unlock is not a live customer with TWTC. AT&T will be deleting the E911 name and address information previously submitted for the former AT&T customer, as AT&T will no longer be responsible for the E911 customer information currently in the E911 database in an unlocked status. Deletion of these stranded unlocks will be accomplished without notification, in that submission of the migrate for any live customers would have been completed much earlier than the ninety (90) day timeframe. Based upon end user record ownership information available in the NPAC database, AT&T shall provide a Stranded Unlock annual report to TWTC that reflects all Stranded Unlocks that remain in the ALI/DMS database for over ninety (90) days. TWTC shall review the Stranded Unlock report, identify its end user records and request to either delete such records or migrate the records to TWTC within two (2) months following the date of the Stranded Unlock report provided by AT&T. TWTC shall reimburse AT&T for any charges AT&T's database vendor imposes on AT&T for the deletion of TWTC's records.

6.3 <u>911 PBX Locate Service®.</u> 911 PBX Locate Service is comprised of a database capability and a separate transport component.

6.3.1 <u>Description of Product.</u> The transport component provides a dedicated trunk path from a Private Branch Exchange (PBX) switch to the appropriate AT&T 911 tandem.

6.3.1.1 The database capability allows TWTC to offer an E911 service to its PBX end users that identifies to the PSAP the physical location of the TWTC PBX 911 end user station telephone number for the 911 call that is placed by the end user.

6.3.2 TWTC may order either the database capability or the transport component as desired or TWTC may order both components of the service.

6.3.3 911 PBX Locate Database Capability. TWTC's end user or TWTC's end user's database management agent (DMA) must provide the end user PBX station telephone numbers and corresponding address and location data to AT&T's 911 database vendor. The data will be loaded and maintained in AT&T's ALI database.

6.3.4 Ordering, provisioning, testing and maintenance shall be provided by TWTC pursuant to the 911 PBX Locate Marketing Service Description (MSD) that is located on the AT&T Interconnection Web site.

6.3.5 TWTC's end user, or TWTC's end user DMA must provide ongoing updates to AT&T's 911 database vendor within a commercially reasonable timeframe of all PBX station telephone number adds, moves and deletions. It will be the responsibility of TWTC to ensure that the end user or DMA maintain the data pertaining to each end user's extension managed by the 911 PBX Locate Service product. TWTC should not submit telephone number updates for specific PBX station telephone numbers that are submitted by TWTC's end user, or TWTC's end user DMA under the terms of 911 PBX Locate product.

6.3.5.1 TWTC must provision all PBX station numbers in the same LATA as the E911 tandem.

6.3.6 TWTC agrees to release, indemnify, defend and hold harmless AT&T from any and all loss, claims, demands, suits, or other action, or any liability whatsoever, whether suffered, made, instituted or asserted by TWTC's end user or by any other party or person, for any personal injury to or death of any person or persons, or for any loss, damage or destruction of any property, whether owned by TWTC or others, or for any infringement or invasion of the right of privacy of any person or persons, caused or claimed to have been caused, directly or indirectly, by the installation, operation, failure to operate, maintenance, removal, presence, condition, location or use of PBX Locate Service features or by any services which are or may be furnished by AT&T in connection therewith, including but not limited to the identification of the telephone number, address or name associated with the telephone used by the party or parties accessing 911 services using 911 PBX Locate Service hereunder, except to the extent caused by AT&T's gross negligence or wilful misconduct. TWTC is responsible for assuring that its authorized end users comply with the provisions of these terms and that unauthorized persons do not gain access to or use the 911 PBX Locate Service through user names, passwords, or other identifiers assigned to TWTC's end user or DMA pursuant to these terms. Specifically, TWTC's end user or DMA must keep and protect from use by any unauthorized individual identifiers, passwords, and any other security token(s) and devices that are provided for access to this product.

6.3.7 TWTC may only use AT&T PBX Locate Service solely for the purpose of validating and correcting 911 related data for TWTC's end users' telephone numbers for which it has direct management authority.

6.3.8 911 PBX Locate Transport Component. The 911 PBX Locate Service transport component requires TWTC to order a CAMA type dedicated trunk from TWTC's end user premise to the appropriate AT&T 911 tandem pursuant to the following provisions.

6.3.8.1 Except as otherwise set forth below, a minimum of two (2) end user specific, dedicated 911 trunks are required between the TWTC's end user premise and the AT&T 911 tandem as described in AT&T's TR 73576 and in accordance with the 911 PBX Locate Marketing Service Description located on the AT&T Interconnection Web site. TWTC is responsible for connectivity between the end user's PBX and TWTC's switch or POP location. TWTC will then order 911 trunks from their switch or POP location to the AT&T 911 tandem. The dedicated trunks shall be, at a minimum, DS0 level trunks configured as part of a digital interface (delivered over a TWTC purchased DS1 facility that hands off at a DS1 or higher level digital or optical interface). TWTC is responsible for ensuring that the PBX switch is capable of sending the calling station's Direct Inward Dial (DID) telephone number to the AT&T 911 tandem in a specified Multi-frequency (MF) Address Signaling Protocol. If the PBX switch supports Primary Rate ISDN (PRI) and the calling stations are DID numbers, then the 911 call can be transmitted using PRI, and there will be no requirement for the PBX Locate Transport component.

6.3.9 Ordering and Provisioning. TWTC will submit an Access Service Request (ASR) to AT&T to order a minimum of two (2) end user specific 911 trunks from its switch or POP location to the AT&T 911 tandem.

6.3.9.1 Testing and maintenance shall be provided by TWTC pursuant to the 911 PBX Locate Marketing Service description that is located on the AT&T Interconnection Web site.

6.3.10 Rates. Rates for the 911 PBX Locate Service database component are set forth in Exhibit A. Trunks and facilities for 911 PBX Locate transport component may be ordered by TWTC pursuant to the terms and conditions set forth in Attachment 3.

UNBUNDLED NETWORK ELEMENTS - South Carolina

Att: 2 Exh: A

CATEGORY	RATE ELEMENTS	Interim	Zone	BCS	USOC	RATES($) Rec	Nonrecurring First	Nonrecurring Add'l	Nonrecurring Disconnect First	Nonrecurring Disconnect Add'l	Svc Order Submitted Elec per LSR	Svc Order Submitted Manually per LSR	Incremental Charge - Manual Svc Order vs. Electronic- 1st	Incremental Charge - Manual Svc Order vs. Electronic- Add'l	Incremental Charge - Manual Svc Order vs. Electronic- Disc 1st	Incremental Charge - Manual Svc Order vs. Electronic- Disc Add'l
											OSS Rates($)					
							First	Add'l	First	Add'l	SOMEC	SOMAN	SOMAN	SOMAN	SOMAN	SOMAN
	The "Zone" shown in the sections for stand-alone loops or loops as part of a combination refers to Geographically Deaveraged UNE Zones. To view Geographically Deaveraged UNE Zone Designations by Central Office, refer to internet Website: http://www.interconnection.bellsouth.com/become_a_clec/html/interconnection.htm															
OPERATIONS SUPPORT SYSTEMS (OSS) - "REGIONAL RATES"																
	NOTE: (1) CLEC should contact its contract negotiator if it prefers the "state specific" OSS charges as ordered by the State Commissions. The OSS charges currently contained in this rate exhibit are the AT&T "regional" service ordering charges. CLEC may elect either the state specific Commission ordered rates for the service ordering charges, or CLEC may elect the regional service ordering charge, however, CLEC can not obtain a mixture of the two regardless if CLEC has a interconnection contract established in each of the 9 states.															
	NOTE: (2) Any element that can be ordered electronically will be billed according to the SOMEC rate listed in this category. Please refer to AT&T's Local Ordering Handbook (LOH) to determine if a product can be ordered electronically. For those elements that cannot be ordered electronically at present per the LOH, the listed SOMEC rate in this category reflects the charge that would be billed to a CLEC once electronic ordering capabilities come on-line for that element. Otherwise, the manual ordering charge, SOMAN, will be applied to a CLECs bill when it submits an LSR to AT&T.															
	OSS - Electronic Service Order Charge, Per Local Service Request (LSR) - UNE Only				SOMEC		3.50	0.00	3.50	0.00						
	OSS - Manual Service Order Charge, Per Local Service Request (LSR) - UNE Only				SOMAN		15.69	0.00	1.97	0.00						
UNE SERVICE DATE ADVANCEMENT CHARGE																
	NOTE: The Expedite charge will be maintained commensurate with BellSouth's FCC No.1 Tariff, Section 5 as applicable.															
	UNE Expedite Charge per Circuit or Line Assignable USOC, per Day			UAL, UEANL, UCL, UEF, UDF, UEQ, UDL, UENTW, UDN, UEA, UHL, ULC, USL, U1T12, U1T48, U1TD1, U1TD3, U1TDX, U1TO3, U1TS1, U1TVX, UC1BC, UC1BL, UC1CC, UC1CL, UC1DC, UC1DL, UC1EC, UC1EL, UC1FC, UC1FL, UC1GC, UC1GL, UC1HC, UC1HL, UDL12, UDL48, UDLO3, UDLSX, UE3, ULD12, ULD48, ULDD1, ULDD3, ULDDX, ULDO3, ULDS1, ULDVX, UNC1X, UNC3X, UNCDX, UNCNX, UNCSX, UNCVX, UNLD1, UNLD3, UXTD1, UXTD3, UXTS1, U1TUC, U1TUD, U1TUB, U1TUA,NTCVG, NTCUD, NTCD1	SDASP		200.00									
ORDER MODIFICATION CHARGE																
	Order Modification Charge (OMC)						26.21	0.00	0.00	0.00						
	Order Modification Additional Dispatch Charge (OMCAD)						150.00	0.00	0.00	0.00						
UNBUNDLED EXCHANGE ACCESS LOOP																
	2-WIRE ANALOG VOICE GRADE LOOP															
	2-Wire Analog Voice Grade Loop - Service Level 1- Zone 1		1	UEANL	UEAL2	14.94	37.92	17.62	23.56	5.32						
	2-Wire Analog Voice Grade Loop - Service Level 1- Zone 2		2	UEANL	UEAL2	21.39	37.92	17.62	23.56	5.32						
	2-Wire Analog Voice Grade Loop - Service Level 1- Zone 3		3	UEANL	UEAL2	26.72	37.92	17.62	23.56	5.32						
	2-Wire Analog Voice Grade Loop - Service Level 1- Zone 1		1	UEANL	UEASL	14.94	37.92	17.62	23.56	5.32						
	2-Wire Analog Voice Grade Loop - Service Level 1- Zone 2		2	UEANL	UEASL	21.39	37.92	17.62	23.56	5.32						
	2-Wire Analog Voice Grade Loop - Service Level 1- Zone 3		3	UEANL	UEASL	26.72	37.92	17.62	23.56	5.32						
	Tag Loop at End User Premise			UEANL	URETL		8.95	0.88								
	Loop Testing - Basic 1st Half Hour			UEANL	URET1		34.23	0.00								
	Loop Testing - Basic Additional Half Hour			UEANL	URETA		19.90	19.90								
	Manual Order Coordination for UVL-SL1s (per loop)			UEANL	UEAMC		8.17	8.17								
	Order Coordination for Specified Conversion Time for UVL-SL1 (per LSR)			UEANL	OCOSL		18.13	18.13								

UNBUNDLED NETWORK ELEMENTS - South Carolina																	Att: 2 Exh: A
CATEGORY		RATE ELEMENTS	Interim	Zone	BCS	USOC	RATES($)					Svc Order Submitted Elec per LSR	Svc Order Submitted Manually per LSR	Incremental Charge - Manual Svc Order vs. Electronic-1st	Incremental Charge - Manual Svc Order vs. Electronic-Add'l	Incremental Charge - Manual Svc Order vs. Electronic-Disc 1st	Incremental Charge - Manual Svc Order vs. Electronic-Disc Add'l
							Rec	Nonrecurring		Nonrecurring Disconnect		OSS Rates($)					
								First	Add'l	First	Add'l	SOMEC	SOMAN	SOMAN	SOMAN	SOMAN	SOMAN
		Unbundled Non-Design Voice Loop, billing for AT&T providing make-up (Engineering Information - E.I.)			UEANL	UEANM		13.47	13.47								
		Unbundled Loop Service Rearrangement, change in loop facility, per circuit			UEANL	UREWO		15.81	8.96	23.56	5.32						
		Bulk Migration, per 2 Wire Voice Loop-SL1			UEANL	UREPN		37.92	17.62	23.56	5.32						
		Bulk Migration Order Coordination, per 2 Wire Voice Loop-SL1			UEANL	UREPM		8.17	8.17								
	2-WIRE Unbundled COPPER LOOP																
		2-Wire Unbundled Copper Loop - Non-Designed Zone 1		1	UEQ	UEQ2X	12.94	36.40	16.10	22.66	4.42						
		2 Wire Unbundled Copper Loop - Non-Designed - Zone 2		2	UEQ	UEQ2X	14.51	36.40	16.10	22.66	4.42						
		2 Wire Unbundled Copper Loop - Non-Designed - Zone 3		3	UEQ	UEQ2X	15.02	36.40	16.10	22.66	4.42						
		Unbundled Miscellaneous Rate Element, Tag Loop at End User Premise			UEQ	URETL		8.95	0.88								
		Loop Testing - Basic 1st Half Hour			UEQ	URET1		34.23	0.00								
		Loop Testing - Basic Additional Half Hour			UEQ	URETA		19.90	19.90								
		Manual Order Coordination 2 Wire Unbundled Copper Loop - Non-Designed (per loop)			UEQ	USBMC		8.17	8.17								
		Unbundled Copper Loop - Non-Design billing for AT&T providing make-up (Engineering Information - E.I.)			UEQ	UEQMU		13.47	13.47								
		Unbundled Loop Service Rearrangement, change in loop facility, per circuit			UEQ	UREWO		14.30	7.45	22.66	4.42						
		Bulk Migration, per 2 Wire UCL-ND			UEQ	UREPN		36.40	16.10	22.66	4.42						
		Bulk Migration Order Coordination, per 2 Wire UCL-ND			UEQ	UREPM		8.17	8.17								
UNBUNDLED EXCHANGE ACCESS LOOP																	
	2-WIRE ANALOG VOICE GRADE LOOP																
		2-Wire Analog Voice Grade Loop - Service Level 2 w/Loop or Ground Start Signaling - Zone 1		1	UEA	UEAL2	16.68	105.98	68.43	53.05	10.61						
		2-Wire Analog Voice Grade Loop - Service Level 2 w/Loop or Ground Start Signaling - Zone 2		2	UEA	UEAL2	23.13	105.98	68.43	53.05	10.61						
		2-Wire Analog Voice Grade Loop - Service Level 2 w/Loop or Ground Start Signaling - Zone 3		3	UEA	UEAL2	28.46	105.98	68.43	53.05	10.61						
		2-Wire Analog Voice Grade Loop - Service Level 2 w/Reverse Battery Signaling - Zone 1		1	UEA	UEAR2	16.68	105.98	68.43	53.05	10.61						
		2-Wire Analog Voice Grade Loop - Service Level 2 w/Reverse Battery Signaling - Zone 2		2	UEA	UEAR2	23.13	105.98	68.43	53.05	10.61						
		2-Wire Analog Voice Grade Loop - Service Level 2 w/Reverse Battery Signaling - Zone 3		3	UEA	UEAR2	28.46	105.98	68.43	53.05	10.61						
		Switch-As-Is Conversion rate per UNE Loop, Single LSR, (per DS0)			UEA	URESL		24.88	3.51								
		Switch-As-Is Conversion rate per UNE Loop, Spreadsheet, (per DS0)			UEA	URESP		26.37	4.99								
		Unbundled Loop Service Rearrangement, change in loop facility, per circuit			UEA	UREWO		87.90	36.44								
		Loop Tagging - Service Level 2 (SL2)			UEA	URETL		11.24	1.10								
		Bulk Migration, per 2 Wire Voice Loop-SL2			UEA	UREPN		105.98	68.43								
		Bulk Migration Order Coordination, per 2 Wire Voice Loop-SL2			UEA	UREPM		0.00	0.00								
	4-WIRE ANALOG VOICE GRADE LOOP																
		4-Wire Analog Voice Grade Loop - Zone 1		1	UEA	UEAL4	32.59	132.38	94.83	59.35	14.61						
		4-Wire Analog Voice Grade Loop - Zone 2		2	UEA	UEAL4	43.89	132.38	94.83	59.35	14.61						
		4-Wire Analog Voice Grade Loop - Zone 3		3	UEA	UEAL4	43.38	132.38	94.83	59.35	14.61						
		Switch-As-Is Conversion rate per UNE Loop, Single LSR, (per DS0)			UEA	URESL		24.88	3.51								
		Switch-As-Is Conversion rate per UNE Loop, Spreadsheet, (per DS0)			UEA	URESP		26.37	4.99								
		Unbundled Loop Service Rearrangement, change in loop facility, per circuit			UEA	UREWO		87.90	36.44								
	2-WIRE ISDN DIGITAL GRADE LOOP																
		2-Wire ISDN Digital Grade Loop - Zone 1		1	UDN	U1L2X	25.21	117.58	80.03	53.05	10.61						
		2-Wire ISDN Digital Grade Loop - Zone 2		2	UDN	U1L2X	32.76	117.58	80.03	53.05	10.61						
		2-Wire ISDN Digital Grade Loop - Zone 3		3	UDN	U1L2X	37.70	117.58	80.03	53.05	10.61						
		Unbundled Loop Service Rearrangement, change in loop facility, per circuit			UDN	UREWO		91.82	44.25								
	2-WIRE ASYMMETRICAL DIGITAL SUBSCRIBER LINE (ADSL) COMPATIBLE LOOP																
		2 Wire Unbundled ADSL Loop including manual service inquiry & facility reservation - Zone 1		1	UAL	UAL2X	12.19	120.84	70.56	50.37	7.93						

CATEGORY	RATE ELEMENTS	Interim	Zone	BCS	USOC	RATES($)					Svc Order Submitted Elec per LSR	Svc Order Submitted Manually per LSR	Incremental Charge - Manual Svc Order vs. Electronic-1st	Incremental Charge - Manual Svc Order vs. Electronic-Add'l	Incremental Charge - Manual Svc Order vs. Electronic-Disc 1st	Incremental Charge - Manual Svc Order vs. Electronic-Disc Add'l
						Rec	Nonrecurring		Nonrecurring Disconnect		OSS Rates($)					
							First	Add'l	First	Add'l	SOMEC	SOMAN	SOMAN	SOMAN	SOMAN	SOMAN
	2 Wire Unbundled ADSL Loop including manual service inquiry & facility reservation - Zone 2		2	UAL	UAL2X	13.71	120.84	70.56	50.37	7.93						
	2 Wire Unbundled ADSL Loop including manual service inquiry & facility reservation - Zone 3		3	UAL	UAL2X	14.14	120.84	70.56	50.37	7.93						
	2 Wire Unbundled ADSL Loop without manual service inquiry & facility reservaton - Zone 1		1	UAL	UAL2W	12.19	95.81	57.82	50.37	7.93						
	2 Wire Unbundled ADSL Loop without manual service inquiry & facility reservaton - Zone 2		2	UAL	UAL2W	13.71	95.81	57.82	50.37	7.93						
	2 Wire Unbundled ADSL Loop without manual service inquiry & facility reservaton - Zone 3		3	UAL	UAL2W	14.14	95.81	57.82	50.37	7.93						
	Unbundled Loop Service Rearrangement, change in loop facility, per circuit			UAL	UREWO		86.38	40.48								
	2-WIRE HIGH BIT RATE DIGITAL SUBSCRIBER LINE (HDSL) COMPATIBLE LOOP															
	2 Wire Unbundled HDSL Loop including manual service inquiry & facility reservation - Zone 1		1	UHL	UHL2X	9.58	129.52	79.24	50.37	7.93						
	2 Wire Unbundled HDSL Loop including manual service inquiry & facility reservation - Zone 2		2	UHL	UHL2X	10.92	129.52	79.24	50.37	7.93						
	2 Wire Unbundled HDSL Loop including manual service inquiry & facility reservation - Zone 3		3	UHL	UHL2X	11.40	129.52	79.24	50.37	7.93						
	2 Wire Unbundled HDSL Loop without manual service inquiry and facility reservation - Zone 1		1	UHL	UHL2W	9.58	104.49	66.50	50.37	7.93						
	2 Wire Unbundled HDSL Loop without manual service inquiry and facility reservation - Zone 2		2	UHL	UHL2W	10.92	104.49	66.50	50.37	7.93						
	2 Wire Unbundled HDSL Loop without manual service inquiry and facility reservation - Zone 3		3	UHL	UHL2W	11.40	104.49	66.50	50.37	7.93						
	Unbundled Loop Service Rearrangement, change in loop facility, per circuit			UHL	UREWO		86.32	40.48								
	4-WIRE HIGH BIT RATE DIGITAL SUBSCRIBER LINE (HDSL) COMPATIBLE LOOP															
	4 Wire Unbundled HDSL Loop including manual service inquiry and facility reservation - Zone 1		1	UHL	UHL4X	16.02	158.18	107.89	55.12	10.38						
	4-Wire Unbundled HDSL Loop including manual service inquiry and facility reservation - Zone 2		2	UHL	UHL4X	14.33	158.18	107.89	55.12	10.38						
	4-Wire Unbundled HDSL Loop including manual service inquiry and facility reservation - Zone 3		3	UHL	UHL4X	16.84	158.18	107.89	55.12	10.38						
	4-Wire Unbundled HDSL Loop without manual service inquiry and facility reservation - Zone 1		1	UHL	UHL4W	16.02	133.14	95.16	55.12	10.38						
	4-Wire Unbundled HDSL Loop without manual service inquiry and facility reservation - Zone 2		2	UHL	UHL4W	14.33	133.14	95.16	55.12	10.38						
	4-Wire Unbundled HDSL Loop without manual service inquiry and facility reservation - Zone 3		3	UHL	UHL4W	16.84	133.14	95.16	55.12	10.38						
	Unbundled Loop Service Rearrangement, change in loop facility, per circuit			UHL	UREWO		86.32	40.48								
	4-WIRE DS1 DIGITAL LOOP															
	4-Wire DS1 Digital Loop - Zone 1		1	USL	USLXX	79.51	253.03	157.89	44.80	11.73						
	4-Wire DS1 Digital Loop - Zone 2		2	USL	USLXX	136.00	253.03	157.89	44.80	11.73						
	4-Wire DS1 Digital Loop - Zone 3		3	USL	USLXX	229.15	253.03	157.89	44.80	11.73						
	Switch-As-Is Conversion rate per UNE Loop, Single LSR, (per DS1)			USL	URESL		24.88	3.51								
	Switch-As-Is Conversion rate per UNE Loop, Spreadsheet, (per DS1)			USL	URESP		26.37	4.99								
	Unbundled Loop Service Rearrangement, change in loop facility, per circuit			USL	UREWO		101.30	43.13								
	4-WIRE 19.2, 56 OR 64 KBPS DIGITAL GRADE LOOP															
	4 Wire Unbundled Digital Loop 2.4 Kbps - Zone 1		1	UDL	UDL2X	29.93	126.66	89.12	59.35	14.61						
	4 Wire Unbundled Digital Loop 2.4 Kbps - Zone 2		2	UDL	UDL2X	33.99	126.66	89.12	59.35	14.61						
	4 Wire Unbundled Digital Loop 2.4 Kbps - Zone3		3	UDL	UDL2X	34.74	126.66	89.12	59.35	14.61						
	4 Wire Unbundled Digital Loop 4.8 Kbps -Zone 1		1	UDL	UDL4X	29.93	126.66	89.12	59.35	14.61						
	4 Wire Unbundled Digital Loop 4.8 Kbps - Zone 2		2	UDL	UDL4X	33.99	126.66	89.12	59.35	14.61						
	4 Wire Unbundled Digital Loop 4.8 Kbps - Zone 3		3	UDL	UDL4X	34.74	126.66	89.12	59.35	14.61						
	4 Wire Unbundled Digital Loop 9.6 Kbps - Zone 1		1	UDL	UDL9X	29.93	126.66	89.12	59.35	14.61						
	5 Wire Unbundled Digital Loop 9.6 Kbps - Zone 2		2	UDL	UDL9X	33.99	126.66	89.12	59.35	14.61						
	6 Wire Unbundled Digital Loop 9.6 Kbps - Zone 3		3	UDL	UDL9X	34.74	126.66	89.12	59.35	14.61						
	4 Wire Unbundled Digital 19.2 Kbps - Zone 1		1	UDL	UDL19	29.93	126.66	89.12	59.35	14.61						
	4 Wire Unbundled Digital 19.2 Kbps - Zone 2		2	UDL	UDL19	33.99	126.66	89.12	59.35	14.61						

UNBUNDLED NETWORK ELEMENTS - South Carolina																	Att: 2 Exh: A
CATEGORY		RATE ELEMENTS	Interim	Zone	BCS	USOC	RATES($)					Svc Order Submitted Elec per LSR	Svc Order Submitted Manually per LSR	Incremental Charge - Manual Svc Order vs. Electronic-1st	Incremental Charge - Manual Svc Order vs. Electronic-Add'l	Incremental Charge - Manual Svc Order vs. Electronic-Disc 1st	Incremental Charge - Manual Svc Order vs. Electronic-Disc Add'l
							Rec	Nonrecurring		Nonrecurring Disconnect		OSS Rates($)					
								First	Add'l	First	Add'l	SOMEC	SOMAN	SOMAN	SOMAN	SOMAN	SOMAN
		4 Wire Unbundled Digital 19.2 Kbps - Zone 3		3	UDL	UDL19	34.74	126.66	89.12	59.35	14.61						
		4 Wire Unbundled Digital Loop 56 Kbps - Zone 1		1	UDL	UDL56	29.93	126.66	89.12	59.35	14.61						
		4 Wire Unbundled Digital Loop 56 Kbps - Zone 2		2	UDL	UDL56	33.99	126.66	89.12	59.35	14.61						
		4 Wire Unbundled Digital Loop 56 Kbps - Zone 3		3	UDL	UDL56	34.74	126.66	89.12	59.35	14.61						
		4 Wire Unbundled Digital Loop 64 Kbps - Zone 1		1	UDL	UDL64	29.93	126.66	89.12	59.35	14.61						
		4 Wire Unbundled Digital Loop 64 Kbps - Zone 2		2	UDL	UDL64	33.99	126.66	89.12	59.35	14.61						
		4 Wire Unbundled Digital Loop 64 Kbps - Zone 3		3	UDL	UDL64	34.74	126.66	89.12	59.35	14.61						
		Switch-As-Is Conversion rate per UNE Loop, Single LSR, (per DS0)			UDL	URESL		24.88	3.51								
		Switch-As-Is Conversion rate per UNE Loop, Spreadsheet, (per DS0)			UDL	URESP		26.37	4.99								
		Unbundled Loop Service Rearrangement, change in loop facility, per circuit			UDL	UREWO		102.34	49.85								
	2-WIRE Unbundled COPPER LOOP																
		2-Wire Unbundled Copper Loop-Designed including manual service inquiry & facility reservation - Zone 1		1	UCL	UCLPB	12.19	119.91	69.62	50.37	7.93						
		2-Wire Unbundled Copper Loop-Designed including manual service inquiry & facility reservation - Zone 2		2	UCL	UCLPB	13.71	119.91	69.62	50.37	7.93						
		2 Wire Unbundled Copper Loop-Designed including manual service inquiry & facility reservation - Zone 3		3	UCL	UCLPB	14.14	119.91	69.62	50.37	7.93						
		2-Wire Unbundled Copper Loop-Designed without manual service inquiry and facility reservation - Zone 1		1	UCL	UCLPW	12.19	94.87	56.89	50.37	7.93						
		2-Wire Unbundled Copper Loop-Designed without manual service inquiry and facility reservation - Zone 2		2	UCL	UCLPW	13.71	94.87	56.89	50.37	7.93						
		2-Wire Unbundled Copper Loop-Designed without manual service inquiry and facility reservation - Zone 3		3	UCL	UCLPW	14.14	94.87	56.89	50.37	7.93						
		Order Coordination for Unbundled Copper Loops (per loop)			UCL	UCLMC		8.17	8.17								
		Unbundled Loop Service Rearrangement, change in loop facility, per circuit			UCL	UREWO		94.87	42.57								
	4-WIRE COPPER LOOP																
		4-Wire Copper Loop-Designed including manual service inquiry and facility reservation - Zone 1		1	UCL	UCL4S	19.64	144.17	93.88	55.12	10.38						
		4-Wire Copper Loop-Designed including manual service inquiry and facility reservation - Zone 2		2	UCL	UCL4S	20.90	144.17	93.88	55.12	10.38						
		4-Wire Copper Loop-Designed including manual service inquiry and facility reservation - Zone 3		3	UCL	UCL4S	19.34	144.17	93.88	55.12	10.38						
		4-Wire Copper Loop-Designed without manual service inquiry and facility reservation - Zone 1		1	UCL	UCL4W	19.64	119.13	81.15	55.12	10.38						
		4-Wire Copper Loop-Designed without manual service inquiry and facility reservation - Zone 2		2	UCL	UCL4W	20.90	119.13	81.15	55.12	10.38						
		4-Wire Copper Loop-Designed without manual service inquiry and facility reservation - Zone 3		3	UCL	UCL4W	19.34	119.13	81.15	55.12	10.38						
		Order Coordination for Unbundled Copper Loops (per loop)			UCL	UCLMC		8.17	8.17								
		Unbundled Loop Service Rearrangement, change in loop facility, per circuit			UCL	UREWO		94.87	42.57								
		Order Coordination for Specified Conversion Time (per LSR)			UEA, UDN, UAL, UHL, UDL, USL	OCOSL		18.13									
	Rearrangements																
		EEL to UNE-L Retermination, per 2 Wire Unbundled Voice Loop-SL2			UEA	UREEL		87.90	36.44								
		EEL to UNE-L Retermination, per 4 Wire Unbundled Voice Loop			UEA	UREEL		87.90	36.44								
		EEL to UNE-L Retermination, per 2 Wire ISDN Loop			UDN	UREEL		91.82	44.25								
		EEL to UNE-L Retermination, per 4 Wire Unbundled Digital Loop			UDL	UREEL		102.34	49.85								
		EEL to UNE-L Retermination, per 4 Wire Unbundled DS1 Loop			USL	UREEL		101.30	43.13								
UNE LOOP COMMINGLING																	
	2-WIRE ANALOG VOICE GRADE LOOP - COMMINGLING																
		2-Wire Analog Voice Grade Loop - Service Level 2 w/Loop or Ground Start Signaling - Zone 1		1	NTCVG	UEAL2	16.68	105.98	68.43	53.05	10.61						
		2-Wire Analog Voice Grade Loop - Service Level 2 w/Loop or Ground Start Signaling - Zone 2		2	NTCVG	UEAL2	23.13	105.98	68.43	53.05	10.61						
		2-Wire Analog Voice Grade Loop - Service Level 2 w/Loop or Ground Start Signaling - Zone 3		3	NTCVG	UEAL2	28.46	105.98	68.43	53.05	10.61						

UNBUNDLED NETWORK ELEMENTS - South Carolina																	Att: 2 Exh: A
CATEGORY		RATE ELEMENTS	Interim	Zone	BCS	USOC	RATES($)					Svc Order Submitted Elec per LSR	Svc Order Submitted Manually per LSR	Incremental Charge - Manual Svc Order vs. Electronic-1st	Incremental Charge - Manual Svc Order vs. Electronic-Add'l	Incremental Charge - Manual Svc Order vs. Electronic-Disc 1st	Incremental Charge - Manual Svc Order vs. Electronic-Disc Add'l
							Rec	Nonrecurring		Nonrecurring Disconnect		OSS Rates($)					
								First	Add'l	First	Add'l	SOMEC	SOMAN	SOMAN	SOMAN	SOMAN	SOMAN
		2-Wire Analog Voice Grade Loop - Service Level 2 w/Reverse Battery Signaling - Zone 1		1	NTCVG	UEAR2	16.68	105.98	68.43	53.05	10.61						
		2-Wire Analog Voice Grade Loop - Service Level 2 w/Reverse Battery Signaling - Zone 2		2	NTCVG	UEAR2	23.13	105.98	68.43	53.05	10.61						
		2-Wire Analog Voice Grade Loop - Service Level 2 w/Reverse Battery Signaling - Zone 3		3	NTCVG	UEAR2	28.46	105.98	68.43	53.05	10.61						
		Switch-As-Is Conversion rate per UNE Loop, Single LSR, (per DS0)			NTCVG	URESL		24.88	3.51								
		Switch-As-Is Conversion rate per UNE Loop, Spreadsheet, (per DS0)			NTCVG	URESP		26.37	4.99								
		Unbundled Loop Service Rearrangement, change in loop facility, per circuit			NTCVG	UREWO		87.90	36.44								
		Loop Tagging - Service Level 2 (SL2)			NTCVG	URETL		11.24	1.10								
	4-WIRE ANALOG VOICE GRADE LOOP																
		4-Wire Analog Voice Grade Loop - Zone 1		1	NTCVG	UEAL4	32.59	132.38	94.83	59.35	14.61						
		4-Wire Analog Voice Grade Loop - Zone 2		2	NTCVG	UEAL4	43.89	132.38	94.83	59.35	14.61						
		4-Wire Analog Voice Grade Loop - Zone 3		3	NTCVG	UEAL4	43.38	132.38	94.83	59.35	14.61						
		Switch-As-Is Conversion rate per UNE Loop, Single LSR, (per DS0)			NTCVG	URESL		24.88	3.51								
		Switch-As-Is Conversion rate per UNE Loop, Spreadsheet, (per DS0)			NTCVG	URESP		26.37	4.99								
		Unbundled Loop Service Rearrangement, change in loop facility, per circuit			NTCVG	UREWO		87.90	36.44								
	4-WIRE DS1 DIGITAL LOOP - COMMINGLING																
		4-Wire DS1 Digital Loop - Zone 1		1	NTCD1	USLXX	79.51	253.03	157.89	44.80	11.73						
		4-Wire DS1 Digital Loop - Zone 2		2	NTCD1	USLXX	136.00	253.03	157.89	44.80	11.73						
		4-Wire DS1 Digital Loop - Zone 3		3	NTCD1	USLXX	229.15	253.03	157.89	44.80	11.73						
		Switch-As-Is Conversion rate per UNE Loop, Single LSR, (per DS1)			NTCD1	URESL		24.88	3.51								
		Switch-As-Is Conversion rate per UNE Loop, Spreadsheet, (per DS1)			NTCD1	URESP		26.37	4.99								
		Unbundled Loop Service Rearrangement, change in loop facility, per circuit			NTCD1	UREWO		101.30	43.13								
	4-WIRE 19.2, 56 OR 64 KBPS DIGITAL GRADE LOOP																
		4 Wire Unbundled Digital Loop 2.4 Kbps - Zone 1		1	NTCUD	UDL2X	29.93	126.66	89.12	59.35	14.61						
		4 Wire Unbundled Digital Loop 2.4 Kbps - Zone 2		2	NTCUD	UDL2X	33.99	126.66	89.12	59.35	14.61						
		4 Wire Unbundled Digital Loop 2.4 Kbps - Zone3		3	NTCUD	UDL2X	34.74	126.66	89.12	59.35	14.61						
		4 Wire Unbundled Digital Loop 4.8 Kbps -Zone 1		1	NTCUD	UDL4X	29.93	126.66	89.12	59.35	14.61						
		4 Wire Unbundled Digital Loop 4.8 Kbps - Zone 2		2	NTCUD	UDL4X	33.99	126.66	89.12	59.35	14.61						
		4 Wire Unbundled Digital Loop 4.8 Kbps - Zone 3		3	NTCUD	UDL4X	34.74	126.66	89.12	59.35	14.61						
		4 Wire Unbundled Digital Loop 9.6 Kbps - Zone 1		1	NTCUD	UDL9X	29.93	126.66	89.12	59.35	14.61						
		5 Wire Unbundled Digital Loop 9.6 Kbps - Zone 2		2	NTCUD	UDL9X	33.99	126.66	89.12	59.35	14.61						
		6 Wire Unbundled Digital Loop 9.6 Kbps - Zone 3		3	NTCUD	UDL9X	34.74	126.66	89.12	59.35	14.61						
		4 Wire Unbundled Digital 19.2 Kbps - Zone 1		1	NTCUD	UDL19	29.93	126.66	89.12	59.35	14.61						
		4 Wire Unbundled Digital 19.2 Kbps - Zone 2		2	NTCUD	UDL19	33.99	126.66	89.12	59.35	14.61						
		4 Wire Unbundled Digital 19.2 Kbps - Zone 3		3	NTCUD	UDL19	34.74	126.66	89.12	59.35	14.61						
		4 Wire Unbundled Digital Loop 56 Kbps - Zone 1		1	NTCUD	UDL56	29.93	126.66	89.12	59.35	14.61						
		4 Wire Unbundled Digital Loop 56 Kbps - Zone 2		2	NTCUD	UDL56	33.99	126.66	89.12	59.35	14.61						
		4 Wire Unbundled Digital Loop 56 Kbps - Zone 3		3	NTCUD	UDL56	34.74	126.66	89.12	59.35	14.61						
		4 Wire Unbundled Digital Loop 64 Kbps - Zone 1		1	NTCUD	UDL64	29.93	126.66	89.12	59.35	14.61						
		4 Wire Unbundled Digital Loop 64 Kbps - Zone 2		2	NTCUD	UDL64	33.99	126.66	89.12	59.35	14.61						
		4 Wire Unbundled Digital Loop 64 Kbps - Zone 3		3	NTCUD	UDL64	34.74	126.66	89.12	59.35	14.61						
		Switch-As-Is Conversion rate per UNE Loop, Single LSR, (per DS0)			NTCUD	URESL		24.88	3.51								
		Switch-As-Is Conversion rate per UNE Loop, Spreadsheet, (per DS0)			NTCUD	URESP		26.37	4.99								
		Unbundled Loop Service Rearrangement, change in loop facility, per circuit			NTCUD	UREWO		102.34	49.85								
		Order Coordination for Specified Conversion Time (per LSR)			NTCVG, NTCUD, NTCD1	OCOSL		18.13									
MAINTENANCE OF SERVICE																	

CATEGORY		RATE ELEMENTS	Interim	Zone	BCS	USOC	RATES($)					Svc Order Submitted Elec per LSR	Svc Order Submitted Manually per LSR	Incremental Charge - Manual Svc Order vs. Electronic-1st	Incremental Charge - Manual Svc Order vs. Electronic-Add'l	Incremental Charge - Manual Svc Order vs. Electronic-Disc 1st	Incremental Charge - Manual Svc Order vs. Electronic-Disc Add'l
							Rec	Nonrecurring		Nonrecurring Disconnect		OSS Rates($)					
								First	Add'l	First	Add'l	SOMEC	SOMAN	SOMAN	SOMAN	SOMAN	SOMAN
		Maintenance of Service Charge, Basic Time, per half hour			UDC, UEA, UDL, UDN, USL, UAL, UHL, UCL, NTCVG, NTCUD, NTCD1, U1TD1, U1TD3, U1TDX, U1TS1, U1TVX, UDF, UDFCX, UDLSX, UE3, ULDD1, ULDD3, ULDDX, ULDS1, ULDVX, UNC1X, UNC3X, UNCDX, UNCSX, UNCVX, ULS	MVVBT		80.00	55.00								
		Maintenance of Service Charge, Overtime, per half hour			UDC, UEA, UDL, UDN, USL, UAL, UHL, UCL, NTCVG, NTCUD, NTCD1, U1TD1, U1TD3, U1TDX, U1TS1, U1TVX, UDF, UDFCX, UDLSX, UE3, ULDD1, ULDD3, ULDDX, ULDS1, ULDVX, UNC1X, UNC3X, UNCDX, UNCSX, UNCVX, ULS	MVVOT		90.00	65.00								
		Maintenance of Service Charge, Premium, per half hour			UDC, UEA, UDL, UDN, USL, UAL, UHL, UCL, NTCVG, NTCUD, NTCD1, U1TD1, U1TD3, U1TDX, U1TS1, U1TVX, UDF, UDFCX, UDLSX, UE3, ULDD1, ULDD3, ULDDX, ULDS1, ULDVX, UNC1X, UNC3X, UNCDX, UNCSX, UNCVX, ULS	MVVPT		100.00	75.00								
LOOP MODIFICATION																	
		Unbundled Loop Modification, Removal of Load Coils - 2 Wire pair less than or equal to 18k ft, per Unbundled Loop			UAL, UHL, UCL, UEQ, ULS, UEA, UEANL, UEPSR, UEPSB	ULM2L		32.46	32.46								
		Unbundled Loop Modification Removal of Load Coils - 4 Wire less than or equal to 18K ft, per Unbundled Loop			UHL, UCL, UEA	ULM4L		32.46	32.46								
		Unbundled Loop Modification Removal of Bridged Tap Removal, per unbundled loop			UAL, UHL, UCL, UEQ, ULS, UEA, UEANL, UEPSR, UEPSB	ULMBT		32.48	32.48								
SUB-LOOPS																	
	Sub-Loop Distribution																
		Sub-Loop - Per Cross Box Location - CLEC Feeder Facility Set-Up			UEANL, UEF	USBSA		241.42	241.42								
		Sub-Loop - Per Cross Box Location - Per 25 Pair Panel Set-Up			UEANL, UEF	USBSB		22.69	22.69								
		Sub-Loop - Per Building Equipment Room - CLEC Feeder Facility Set-Up			UEANL	USBSC		177.84	177.84								
		Sub-Loop - Per Building Equipment Room - Per 25 Pair Panel Set-Up			UEANL	USBSD		55.58	55.58								

UNBUNDLED NETWORK ELEMENTS - South Carolina																	Att: 2 Exh: A
CATEGORY		RATE ELEMENTS	Interim	Zone	BCS	USOC	RATES($)					Svc Order Submitted Elec per LSR	Svc Order Submitted Manually per LSR	Incremental Charge - Manual Svc Order vs. Electronic-1st	Incremental Charge - Manual Svc Order vs. Electronic-Add'l	Incremental Charge - Manual Svc Order vs. Electronic-Disc 1st	Incremental Charge - Manual Svc Order vs. Electronic-Disc Add'l
							Rec	Nonrecurring		Nonrecurring Disconnect		OSS Rates($)					
								First	Add'l	First	Add'l	SOMEC	SOMAN	SOMAN	SOMAN	SOMAN	SOMAN
		Sub-Loop Distribution Per 2-Wire Analog Voice Grade Loop - Zone 1		1	UEANL	USBN2	8.87	65.94	31.03	45.35	6.71						
		Sub-Loop Distribution Per 2-Wire Analog Voice Grade Loop - Zone 2		2	UEANL	USBN2	12.58	65.94	31.03	45.35	6.71						
		Sub-Loop Distribution Per 2-Wire Analog Voice Grade Loop - Zone 3		3	UEANL	USBN2	14.79	65.94	31.03	45.35	6.71						
		Order Coordination for Unbundled Sub-Loops, per sub-loop pair			UEANL	USBMC		8.17	8.17								
		Sub-Loop Distribution Per 4-Wire Analog Voice Grade Loop - Zone 1		1	UEANL	USBN4	14.11	79.21	44.29	49.82	9.09						
		Sub-Loop Distribution Per 4-Wire Analog Voice Grade Loop - Zone 2		2	UEANL	USBN4	19.40	79.21	44.29	49.82	9.09						
		Sub-Loop Distribution Per 4-Wire Analog Voice Grade Loop - Zone 3		3	UEANL	USBN4	18.90	79.21	44.29	49.82	9.09						
		Order Coordination for Unbundled Sub-Loops, per sub-loop pair			UEANL	USBMC		8.17	8.17								
		Sub-Loop 2-Wire Intrabuilding Network Cable (INC)			UEANL	USBR2	2.41	53.13	18.21	45.35	6.71						
		Order Coordination for Unbundled Sub-Loops, per sub-loop pair			UEANL	USBMC		8.17	8.17								
		Sub-Loop 4-Wire Intrabuilding Network Cable (INC)			UEANL	USBR4	5.36	59.38	24.47	49.82	9.09						
		Order Coordination for Unbundled Sub-Loops, per sub-loop pair			UEANL	USBMC		8.17	8.17								
		Loop Testing - Basic 1st Half Hour			UEANL	URET1		34.23	0.00								
		Loop Testing - Basic Additional Half Hour			UEANL	URETA		19.90	19.90								
		2 Wire Copper Unbundled Sub-Loop Distribution - Zone 1		1	UEF	UCS2X	7.11	65.94	31.03	45.35	6.71						
		2 Wire Copper Unbundled Sub-Loop Distribution - Zone 2		2	UEF	UCS2X	9.83	65.94	31.03	45.35	6.71						
		2 Wire Copper Unbundled Sub-Loop Distribution - Zone 3		3	UEF	UCS2X	10.48	65.94	31.03	45.35	6.71						
		Order Coordination for Unbundled Sub-Loops, per sub-loop pair			UEF	USBMC		8.17	8.17								
		4 Wire Copper Unbundled Sub-Loop Distribution - Zone 1		1	UEF	UCS4X	7.85	79.21	44.29	49.82	9.09						
		4 Wire Copper Unbundled Sub-Loop Distribution - Zone 2		2	UEF	UCS4X	14.17	79.21	44.29	49.82	9.09						
		4 Wire Copper Unbundled Sub-Loop Distribution - Zone 3		3	UEF	UCS4X	12.64	79.21	44.29	49.82	9.09						
		Order Coordination for Unbundled Sub-Loops, per sub-loop pair			UEF	USBMC		8.17	8.17								
		Loop Tagging Service Level 1, Unbundled Copper Loop, Non-Designed and Distribution Subloops			UEF, UEANL	URETL		8.95	0.88								
		Loop Testing - Basic 1st Half Hour			UEF	URET1		34.23	0.00								
		Loop Testing - Basic Additional Half Hour			UEF	URETA		19.90	19.90								
	Unbundled Sub-Loop Modification																
		Unbundled Sub-Loop Modification - 2-W Copper Dist Load Coil/Equip Removal per 2-W PR			UEF	ULM2X		176.17	5.11								
		Unbundled Sub-loop Modification - 4-W Copper Dist Load Coil/Equip Removal per 4-W PR			UEF	ULM4X		176.17	5.11								
		Unbundled Loop Modification, Removal of Bridge Tap, per unbundled loop			UEF	ULMBT		278.82	6.13								
	Unbundled Network Terminating Wire (UNTW)																
		Unbundled Network Terminating Wire (UNTW) per Pair			UENTW	UENPP	0.3303	30.20	30.20								
	Network Interface Device (NID)																
		Network Interface Device (NID) - 1-2 lines			UENTW	UND12		43.68	28.79								
		Network Interface Device (NID) - 1-6 lines			UENTW	UND16		64.42	49.53								
		Network Interface Device Cross Connect - 2 W			UENTW	UNDC2		5.92	5.92								
		Network Interface Device Cross Connect - 4W			UENTW	UNDC4		5.92	5.92								
UNE OTHER, PROVISIONING ONLY - NO RATE																	
		Unbundled Contact Name, Provisioning Only - no rate			UAL, UCL, UDC, UDL, UDN, UEA, UHL, UEANL, UEF, UEQ, UENTW, NTCVG, NTCUD, NTCD1, USL	UNECN	0.00	0.00									
		Unbundled DS1 Loop - Superframe Format Option - no rate			USL, NTCD1	CCOSF		0.00									
		Unbundled DS1 Loop - Expanded Superframe Format option - no rate			USL, NTCD1	CCOEF		0.00									
		NID - Dispatch and Service Order for NID installation			UENTW	UNDBX	0.00	0.00									
		UNTW Circuit Establishment, Provisioning Only - No Rate			UENTW	UENCE	0.00	0.00									

UNBUNDLED NETWORK ELEMENTS - South Carolina																	Att: 2 Exh: A
CATEGORY		RATE ELEMENTS	Interim	Zone	BCS	USOC	RATES($)					Svc Order Submitted Elec per LSR	Svc Order Submitted Manually per LSR	Incremental Charge - Manual Svc Order vs. Electronic-1st	Incremental Charge - Manual Svc Order vs. Electronic-Add'l	Incremental Charge - Manual Svc Order vs. Electronic-Disc 1st	Incremental Charge - Manual Svc Order vs. Electronic-Disc Add'l
							Rec	Nonrecurring		Nonrecurring Disconnect		OSS Rates($)					
								First	Add'l	First	Add'l	SOMEC	SOMAN	SOMAN	SOMAN	SOMAN	SOMAN
LOOP MAKE-UP																	
		Loop Makeup - Preordering Without Reservation, per working or spare facility queried (Manual).			UMK	UMKLW		24.04	24.04								
		Loop Makeup - Preordering With Reservation, per spare facility queried (Manual).			UMK	UMKLP		25.49	25.49								
		Loop Makeup--With or Without Reservation, per working or spare facility queried (Mechanized)			UMK	UMKMQ		0.34	0.34								
LINE SPLITTING																	
	END USER ORDERING-CENTRAL OFFICE BASED																
		Line Splitting - per line activation DLEC owned splitter			UEPSR UEPSB	UREOS	0.61										
		Line Splitting - per line activation AT&T owned - physical			UEPSR UEPSB	UREBP	0.61	37.09	21.24	20.07	9.85						
		Line Splitting - per line activation AT&T owned - virtual			UEPSR UEPSB	UREBV	0.61	37.09	21.24	20.07	9.85						
	END USER ORDERING - REMOTE SITE LINE SPLITTING																
	UNBUNDLED EXCHANGE ACCESS LOOP																
	2-WIRE ANALOG VOICE GRADE LOOP																
		2 Wire Analog Voice Grade Loop-Service Level 1-Line Splitting-Zone 1		1	UEPSR UEPSB	UEALS	14.94	37.92	17.62	23.56	5.32						
		2 Wire Analog Voice Grade Loop-Service Level 1-Line Splitting-Zone 1		1	UEPSR UEPSB	UEABS	14.94	37.92	17.62	23.56	5.32						
		2 Wire Analog Voice Grade Loop- Service Level 1-Line Splitting-Zone 2		2	UEPSR UEPSB	UEALS	21.39	37.92	17.62	23.56	5.32						
		2 Wire Analog Voice Grade Loop- Service Level 1-Line Splitting-Zone 2		2	UEPSR UEPSB	UEABS	21.39	37.92	17.62	23.56	5.32						
		2 Wire Analog Voice Grade Loop-Service Level 1-Line Splitting-Zone 3		3	UEPSR UEPSB	UEALS	26.72	37.92	17.62	23.56	5.32						
		2 Wire Analog Voice Grade Loop-Service Level 1-Line Splitting-Zone 3		3	UEPSR UEPSB	UEABS	26.72	37.92	17.62	23.56	5.32						
	PHYSICAL COLLOCATION																
		Physical Collocation-2 Wire Cross Connects (Loop) for Line Splitting			UEPSR UEPSB	PE1LS	0.0341	12.32	11.83	6.04	5.45						
	VIRTUAL COLLOCATION																
		Virtual Collocation-2 Wire Cross Connects (Loop) for Line Splitting			UEPSR UEPSB	VE1LS	0.0317	12.32	11.83	6.04	5.45						
UNBUNDLED DEDICATED TRANSPORT																	
	INTEROFFICE CHANNEL - DEDICATED TRANSPORT																
		Interoffice Channel - 2-Wire Voice Grade - per mile			U1TVX	1L5XX	0.0167										
		Interoffice Channel - 2-Wire Voice Grade - Facility Termination			U1TVX	U1TV2	24.30	40.63	27.47	16.77	6.91						
		Interoffice Channel - 2-Wire Voice Grade Rev Bat. - per mile			U1TVX	1L5XX	0.0167										
		Interoffice Channel - 2-Wire VG Rev Bat. - Facility Termination			U1TVX	U1TR2	24.30	40.63	27.47	16.77	6.91						
		Interoffice Channel - 4-Wire Voice Grade - per mile			U1TVX	1L5XX	0.0167										
		Interoffice Channel - 4- Wire Voice Grade - Facility Termination			U1TVX	U1TV4	21.29	40.63	27.47	16.77	6.91						
		Interoffice Channel - 56 kbps - per mile			U1TDX	1L5XX	0.0167										
		Interoffice Channel - 56 kbps - Facility Termination			U1TDX	U1TD5	16.76	40.63	27.47	16.77	6.91						
		Interoffice Channel - 64 kbps - per mile			U1TDX	1L5XX	0.0167										
		Interoffice Channel - 64 kbps - Facility Termination			U1TDX	U1TD6	16.76	40.63	27.47	16.77	6.91						
		Interoffice Channel - DS1 - per mile			U1TD1	1L5XX	0.3415										
		Interoffice Channel - DS1 - Facility Termination			U1TD1	U1TF1	77.14	89.47	81.99	16.39	14.48						
		Interoffice Channel - DS3 - per mile			U1TD3	1L5XX	8.02										
		Interoffice Channel - DS3 - Facility Termination			U1TD3	U1TF3	880.65	279.37	163.12	60.33	58.59						
		Interoffice Channel - STS-1 - per mile			U1TS1	1L5XX	8.02										
		Interoffice Channel - STS-1 - Facility Termination			U1TS1	U1TFS	880.55	279.37	163.12	60.33	58.59						
	UNBUNDLED DARK FIBER																
		Dark Fiber - Interoffice Transport, Per Four Fiber Strands, Per Route Mile Or Fraction Thereof			UDF, UDFCX	1L5DF	36.41										
		Dark Fiber - Interoffice Transport, Per Four Fiber Strands, Per Route Mile Or Fraction Thereof			UDF, UDFCX	UDF14		640.51	138.17	317.76	198.11						
HIGH CAPACITY UNBUNDLED LOCAL LOOP																	
	DS-3/STS-1 UNBUNDLED LOCAL LOOP - Stand Alone																
		DS3 Unbundled Local Loop - per mile			UE3	1L5ND	12.26										
		DS3 Unbundled Local Loop - Facility Termination			UE3	UE3PX	306.36	452.52	264.53	119.75	83.77						
		STS-1Unbundled Local Loop - per mile			UDLSX	1L5ND	12.26										
		STS-1 Unbundled Local Loop - Facility Termination			UDLSX	UDLS1	313.49	452.52	264.53	119.75	83.77						

UNBUNDLED NETWORK ELEMENTS - South Carolina

Att: 2 Exh: A

CATEGORY	RATE ELEMENTS	Interim	Zone	BCS	USOC	RATES($)					Svc Order Submitted Elec per LSR	Svc Order Submitted Manually per LSR	Incremental Charge - Manual Svc Order vs. Electronic-1st	Incremental Charge - Manual Svc Order vs. Electronic-Add'l	Incremental Charge - Manual Svc Order vs. Electronic-Disc 1st	Incremental Charge - Manual Svc Order vs. Electronic-Disc Add'l
						Rec	Nonrecurring		Nonrecurring Disconnect		OSS Rates($)					
							First	Add'l	First	Add'l	SOMEC	SOMAN	SOMAN	SOMAN	SOMAN	SOMAN
ENHANCED EXTENDED LINK (EELs)																
	Network Elements Used in Combinations															
	2-Wire VG Loop (SL2) in Combination - Zone 1		1	UNCVX	UEAL2	16.68	105.98	68.43	53.05	10.61						
	2-Wire VG Loop (SL2) in Combination - Zone 2		2	UNCVX	UEAL2	23.13	105.98	68.43	53.05	10.61						
	2-Wire VG Loop (SL2) in Combination - Zone 3		3	UNCVX	UEAL2	28.46	105.98	68.43	53.05	10.61						
	4-Wire Analog Voice Grade Loop in Combination - Zone 1		1	UNCVX	UEAL4	32.59	132.38	94.83	59.35	14.61						
	4-Wire Analog Voice Grade Loop in Combination - Zone 2		2	UNCVX	UEAL4	43.89	132.38	94.83	59.35	14.61						
	4-Wire Analog Voice Grade Loop in Combination - Zone 3		3	UNCVX	UEAL4	43.38	132.38	94.83	59.35	14.61						
	2-Wire ISDN Loop in Combination - Zone 1		1	UNCNX	U1L2X	25.21	117.58	80.03	53.05	10.61						
	2-Wire ISDN Loop in Combination - Zone 2		2	UNCNX	U1L2X	32.76	117.58	80.03	53.05	10.61						
	2-Wire ISDN Loop in Combination - Zone 3		3	UNCNX	U1L2X	37.70	117.58	80.03	53.05	10.61						
	4-Wire 56Kbps Digital Grade Loop in Combination - Zone 1		1	UNCDX	UDL56	29.93	126.66	89.12	59.35	14.61						
	4-Wire 56Kbps Digital Grade Loop in Combination - Zone 2		2	UNCDX	UDL56	33.99	126.66	89.12	59.35	14.61						
	4-Wire 56Kbps Digital Grade Loop in Combination - Zone 3		3	UNCDX	UDL56	34.74	126.66	89.12	59.35	14.61						
	4-Wire 64Kbps Digital Grade Loop in Combination - Zone 1		1	UNCDX	UDL64	29.93	126.66	89.12	59.35	14.61						
	4-Wire 64Kbps Digital Grade Loop in Combination - Zone 2		2	UNCDX	UDL64	33.99	126.66	89.12	59.35	14.61						
	4-Wire 64Kbps Digital Grade Loop in Combination - Zone 3		3	UNCDX	UDL64	34.74	126.66	89.12	59.35	14.61						
	4-Wire DS1 Digital Loop in Combination - Zone 1		1	UNC1X	USLXX	79.51	253.03	157.89	44.80	11.73						
	4-Wire DS1 Digital Loop in Combination - Zone 2		2	UNC1X	USLXX	136.00	253.03	157.89	44.80	11.73						
	4-Wire DS1 Digital Loop in Combination - Zone 3		3	UNC1X	USLXX	229.15	253.03	157.89	44.80	11.73						
	DS3 Local Loop in combination - per mile			UNC3X	1L5ND	12.26										
	DS3 Local Loop in combination - Facility Termination			UNC3X	UE3PX	306.36	452.52	264.53	119.75	83.77						
	STS-1 Local Loop in combination - per mile			UNCSX	1L5ND	12.26										
	STS-1 Local Loop in combination - Facility Termination			UNCSX	UDLS1	313.49	452.52	264.53	119.75	83.77						
	Interoffice Channel in combination - 2-wire VG - per mile			UNCVX	1L5XX	0.0167										
	Interoffice Channel in combination - 2-wire VG - Facility Termination			UNCVX	U1TV2	24.30	40.63	27.47	16.77	6.91						
	Interoffice Channel in combination - 4-wire VG - per mile			UNCVX	1L5XX	0.0167										
	Interoffice Channel in combination - 4-wire VG - Facility Termination			UNCVX	U1TV4	21.29	40.63	27.47	16.77	6.91						
	Interoffice Channel in combination - 4-wire 56 kbps - per mile			UNCDX	1L5XX	0.0167										
	Interoffice Channel in combination - 4-wire 56 kbps - Facility Termination			UNCDX	U1TD5	16.76	40.63	27.47	16.77	6.91						
	Interoffice Channel in combination - 4-wire 64 kbps - per mile			UNCDX	1L5XX	0.0167										
	Interoffice Channel in combination - 4-wire 64 kbps - Facility Termination			UNCDX	U1TD6	16.76	40.63	27.47	16.77	6.91						
	Interoffice Channel in combination - DS1 - per mile			UNC1X	1L5XX	0.3415										
	Interoffice Channel in combination - DS1 Facility Termination			UNC1X	U1TF1	77.14	89.47	81.99	16.39	14.48						
	Interoffice Channel in combination - DS3 - per mile			UNC3X	1L5XX	8.02										
	Interoffice Channel in combination - DS3 - Facility Termination			UNC3X	U1TF3	880.65	279.37	163.12	60.33	58.59						
	Interoffice Channel in combination - STS-1 - per mile			UNCSX	1L5XX	8.02										
	Interoffice Channel in combination - STS-1 Facility Termination			UNCSX	U1TFS	880.55	279.37	163.12	60.33	58.59						
ADDITIONAL NETWORK ELEMENTS																
	Optional Features & Functions:															
	Clear Channel Capability Extended Frame Option - per DS1	I		U1TD1, ULDD1,UNC1X	CCOEF		0.00									
	Clear Channel Capability Super FrameOption - per DS1	I		U1TD1, ULDD1,UNC1X	CCOSF		0.00									
	Clear Channel Capability (SF/ESF) Option - Subsequent Activity - per DS1	I		ULDD1, U1TD1, UNC1X, USL	NRCCC		185.26	23.86	1.99	0.78						
	C-bit Parity Option - Subsequent Activity - per DS3	i		U1TD3, ULDD3, UE3, UNC3X	NRCC3		219.58	7.69	0.737	0.00						
	DS1/DS0 Channel System			UNC1X	MQ1	107.57	91.24	62.71	10.56	9.81						
	DS3/DS1Channel System			UNC3X, UNCSX	MQ3	144.02	178.54	94.18	33.33	31.90						
	Voice Grade COCI in combination			UNCVX	1D1VG	0.56	6.59	4.73								
	Voice Grade COCI - for 2W-SL2 & 4W Voice Grade Local Loop			UEA	1D1VG	0.56	6.59	4.73								
	Voice Grade COCI - for connection to a channelized DS1 Local Channel in the same SWC as collocation			U1TUC	1D1VG	0.56	6.59	4.73								
	OCU-DP COCI (2.4-64kbs) in combination			UNCDX	1D1DD	1.19	6.59	4.73								
	OCU-DP COCI (2.4-64kbs) - for Unbundled Digital Loop			UDL	1D1DD	1.19	6.59	4.73								
	OCU-DP COCI (2.4-64kbs) - for connection to a channelized DS1 Local Channel in the same SWC as collocation			U1TUD	1D1DD	1.19	6.59	4.73								
	2-wire ISDN COCI (BRITE) in combination			UNCNX	UC1CA	2.56	6.59	4.73								

UNBUNDLED NETWORK ELEMENTS - South Carolina

Att: 2 Exh: A

CATEGORY	RATE ELEMENTS	Interim	Zone	BCS	USOC	RATES($) Rec	Nonrecurring First	Nonrecurring Add'l	Nonrecurring Disconnect First	Nonrecurring Disconnect Add'l	Svc Order Submitted Elec per LSR	Svc Order Submitted Manually per LSR	Incremental Charge - Manual Svc Order vs. Electronic- 1st	Incremental Charge - Manual Svc Order vs. Electronic- Add'l	Incremental Charge - Manual Svc Order vs. Electronic- Disc 1st	Incremental Charge - Manual Svc Order vs. Electronic- Disc Add'l
											OSS Rates($)					
							First	Add'l	First	Add'l	SOMEC	SOMAN	SOMAN	SOMAN	SOMAN	SOMAN
	2-wire ISDN COCI (BRITE) - for a Local Loop			UDN	UC1CA	2.56	6.59	4.73								
	2-wire ISDN COCI (BRITE) - for connection to a channelized DS1 Local Channel in the same SWC as collocation			U1TUB	UC1CA	2.56	6.59	4.73								
	DS1 COCI in combination			UNC1X	UC1D1	8.64	6.59	4.73								
	DS1 COCI - for Stand Alone Local Channel			ULDD1	UC1D1	8.64	6.59	4.73								
	DS1 COCI - for Stand Alone Interoffice Channel			U1TD1	UC1D1	8.64	6.59	4.73								
	DS1 COCI - for DS1 Local Loop			USL, NTCD1	UC1D1	8.64	6.59	4.73								
	DS1 COCI - for connection to a channelized DS1 Local Channel in the same SWC as collocation			U1TUA	UC1D1	8.64	6.59	4.73								
	Wholesale - UNE, Switch-As-Is Conversion Charge			UNCVX, UNCDX, UNC1X, UNC3X, UNCSX, UDFCX, XDH1X, HFQC6, XDD2X, XDV6X, XDDFX, XDD4X, HFRST, UNCNX	UNCCC		5.61	5.61								
	Unbundled Misc Rate Element, SNE SAI, Single Network Element - Switch As Is Non-recurring Charge, per circuit (LSR)			U1TVX, U1TDX, U1TD1, U1TD3, U1TS1, UDF, UE3	URESL		40.27	13.52								
	Unbundled Misc Rate Element, SNE SAI, Single Network Element - Switch As Is Non-recurring Charge, incremental charge per circuit on a spreadsheet			U1TVX, U1TDX, U1TD1, U1TD3, U1TS1, UDF, UE3	URESP		23.80	12.11								
	Access to DCS - Customer Reconfiguration (FlexServ)															
	Customer Reconfiguration Establishment						1.48		1.85							
	DS1 DCS Termination with DS0 Switching					27.96	25.60	19.70	16.67	13.41						
	DS1 DCS Termination with DS1 Switching					12.67	18.51	12.61	12.24	8.98						
	DS3 DCS Termination with DS1 Switching					176.51	25.60	19.70	16.67	13.41						
	Node (SynchroNet)															
	Node per month			UNCDX	UNCNT	14.55										
	Service Rearrangements															
	NRC - Change in Facility Assignment per circuit Service Rearrangement	I		U1TVX, U1TDX, U1TUC, U1TUD, U1TUB, ULDVX, ULDDX, UNCVX, UNCDX, UNC1X	URETD		101.30	43.13								
	NRC - Change in Facility Assignment per circuit Project Management (added to CFA per circuit if project managed)	I		U1TVX, U1TDX, U1TUC, U1TUD, U1TUB, ULDVX, ULDDX, UNCVX, UNCDX, UNC1X	URETB		3.66	3.66								
	NRC - Order Coordination Specific Time - Dedicated Transport	I		UNC1X, UNC3X	OCOSR		18.90	18.90								
COMMINGLING																
	Commingling Authorization			UNCVX, UNCDX, UNC1X, UNC3X, UNCSX, U1TD1, U1TD3, U1TS1, UE3, UDLSX, U1TVX, U1TDX, U1TUB, ULDVX, ULDD1, ULDD3, ULDS1	CMGAU	0.00	0.00	0.00	0.00	0.00						
	Commingled (UNE part of single bandwidth circuit)															
	Commingled VG COCI			XDV2X	1D1VG	0.56	6.59	4.73								
	Commingled Digital COCI			XDV6X	1D1DD	1.19	6.59	4.73								
	Commingled ISDN COCI			XDD4X	UC1CA	2.56	6.59	4.73								
	Commingled 2-wire VG Interoffice Channel Facility Termination			XDV2X	U1TV2	24.30	40.63	27.47	16.77	6.91						
	Commingled 4-wire VG Interoffice Channel Facility Termination			XDV6X	U1TV4	21.29	40.63	27.47	16.77	6.91						
	Commingled 56kbps Interoffice Channel Facility Termination			XDD4X	U1TD5	16.76	40.63	27.47	16.77	6.91						
	Commingled 64kbps Interoffice Channel Facility Termination			XDD4X	U1TD6	16.76	40.63	27.47	16.77	6.91						
	Commingled VG/DS0 Interoffice Channel per mile			XDV2X, XDV6X, XDD4X	1L5XX	0.0167										
	Commingled 2-wire Local Loop Zone 1		1	XDV2X	UEAL2	16.68	105.98	68.43	53.05	10.61						
	Commingled 2-wire Local Loop Zone 2		2	XDV2X	UEAL2	23.13	105.98	68.43	53.05	10.61						
	Commingled 2-wire Local Loop Zone 3		3	XDV2X	UEAL2	28.46	105.98	68.43	53.05	10.61						

UNBUNDLED NETWORK ELEMENTS - South Carolina																	Att: 2 Exh: A
CATEGORY	RATE ELEMENTS	Interim	Zone	BCS	USOC	RATES($)					Svc Order Submitted Elec per LSR	Svc Order Submitted Manually per LSR	Incremental Charge - Manual Svc Order vs. Electronic-1st	Incremental Charge - Manual Svc Order vs. Electronic-Add'l	Incremental Charge - Manual Svc Order vs. Electronic-Disc 1st	Incremental Charge - Manual Svc Order vs. Electronic-Disc Add'l
						Rec	Nonrecurring		Nonrecurring Disconnect		OSS Rates($)					
							First	Add'l	First	Add'l	SOMEC	SOMAN	SOMAN	SOMAN	SOMAN	SOMAN
	Commingled 4-wire Local Loop Zone 1		1	XDV6X	UEAL4	32.59	132.38	94.83	59.35	14.61						
	Commingled 4-wire Local Loop Zone 2		2	XDV6X	UEAL4	43.89	132.38	94.83	59.35	14.61						
	Commingled 4-wire Local Loop Zone 3		3	XDV6X	UEAL4	43.38	132.38	94.83	59.35	14.61						
	Commingled 56kbps Local Loop Zone 1		1	XDD4X	UDL56	29.93	126.66	89.12	59.35	14.61						
	Commingled 56kbps Local Loop Zone 2		2	XDD4X	UDL56	33.99	126.66	89.12	59.35	14.61						
	Commingled 56kbps Local Loop Zone 3		3	XDD4X	UDL56	34.74	126.66	89.12	59.35	14.61						
	Commingled 64kbps Local Loop Zone 1		1	XDD4X	UDL64	29.93	126.66	89.12	59.35	14.61						
	Commingled 64kbps Local Loop Zone 2		2	XDD4X	UDL64	33.99	126.66	89.12	59.35	14.61						
	Commingled 64kbps Local Loop Zone 3		3	XDD4X	UDL64	34.74	126.66	89.12	59.35	14.61						
	Commingled ISDN Local Loop Zone 1		1	XDD4X	U1L2X	25.21	117.58	80.03	53.05	10.61						
	Commingled ISDN Local Loop Zone 2		2	XDD4X	U1L2X	32.76	117.58	80.03	53.05	10.61						
	Commingled ISDN Local Loop Zone 3		3	XDD4X	U1L2X	37.70	117.58	80.03	53.05	10.61						
	Commingled DS1 COCI			XDH1X	UC1D1	8.64	6.59	4.73								
	Commingled DS1 Interoffice Channel Facility Termination			XDH1X	U1TF1	77.14	89.47	81.99	16.39	14.48						
	Commingled DS1 Interoffice Channel per mile			XDH1X	1L5XX	0.3415										
	Commingled DS1/DS0 Channel System			XDH1X	MQ1	107.57	91.24	62.71	10.56	9.81						
	Commingled DS1 Local Loop Zone 1		1	XDH1X	USLXX	79.51	253.03	157.89	44.80	11.73						
	Commingled DS1 Local Loop Zone 2		2	XDH1X	USLXX	136.00	253.03	157.89	44.80	11.73						
	Commingled DS1 Local Loop Zone 3		3	XDH1X	USLXX	229.15	253.03	157.89	44.80	11.73						
	Commingled DS3 Local Loop Facility Termination			HFQC6	UE3PX	306.36	452.52	264.53	119.75	83.77						
	Commingled DS3/STS-1 Local Loop per mile			HFQC6, HFRST	1L5ND	12.26										
	Commingled STS-1 Local Loop Facility Termination			HFRST	UDLS1	313.49	452.52	264.53	119.75	83.77						
	Commingled DS3/DS1 Channel System			HFQC6	MQ3	144.02	178.54	94.18	33.33	31.90						
	Commingled DS3 Interoffice Channel Facility Termination			HFQC6	U1TF3	880.65	279.37	163.12	60.33	58.59						
	Commingled DS3 Interoffice Channel per mile			HFQC6	1L5XX	8.02										
	Commingled STS-1Interoffice Channel Facility Termination			HFRST	U1TFS	880.55	279.37	163.12	60.33	58.59						
	Commingled STS-1Interoffice Channel per mile			HFRST	1L5XX	8.02										
	Commingled Dark Fiber - Interoffice Transport, Per Four Fiber Strands, Per Route Mile Or Fraction Thereof			HEQDL	1L5DF	36.41										
	Commingled Dark Fiber - Interoffice Transport, Per Four Fiber Strands, Per Route Mile Or Fraction Thereof			HEQDL	UDF14		640.51	138.17	317.76	198.11						
	UNE to Commingled Conversion Tracking			XDH1X, HFQC6	CMGUN	0.00	0.00	0.00	0.00	0.00						
	SPA to Commingled Conversion Tracking			XDH1X, HFQC6	CMGSP	0.00	0.00	0.00	0.00	0.00						
LNP Query Service																
	LNP Charge Per query					0.0008837										
	LNP Service Establishment Manual						25.09	25.09	23.07	23.07						
	LNP Service Provisioning with Point Code Establishment						594.82	303.88	269.53	198.18						
911 PBX LOCATE																
	911 PBX LOCATE DATABASE CAPABILITY															
	Service Establishment per CLEC per End User Account			9PBDC	9PBEU		1,813.00									
	Changes to TN Range or Customer Profile			9PBDC	9PBTN		181.40									
	Per Telephone Number (Monthly)			9PBDC	9PBMM	0.07										
	Change Company (Service Provider) ID			9PBDC	9PBPC		532.48									
	PBX Locate Service Support per CLEC (Monthlt)			9PBDC	9PBMR	181.29										
	Service Order Charge			9PBDC	9PBSC		15.69									
	911 PBX LOCATE TRANSPORT COMPONENT															
	See Att 3															
	Note: Rates displaying an "I" in Interim column are interim as a result of a Commission order.															

UNBUNDLED NETWORK ELEMENTS - South Carolina														Attachment: 2 Exh. B			
CATEGORY		RATE ELEMENTS	Interim	Zone	BCS	USOC	RATES ($)					Svc Order Submitted Elec per LSR	Svc Order Submitted Manually per LSR	Incremental Charge - Manual Svc Order vs. Electronic-1st	Incremental Charge - Manual Svc Order vs. Electronic-Add'l	Incremental Charge - Manual Svc Order vs. Electronic-Disc 1st	Incremental Charge - Manual Svc Order vs. Electronic-Disc Add'l
							Rec	Nonrecurring		Nonrecurring Disconnect		OSS Rates ($)					
								First	Add'l	First	Add'l	SOMEC	SOMAN	SOMAN	SOMAN	SOMAN	SOMAN
UNBUNDLED EXCHANGE ACCESS LOOP																	
	2-WIRE HIGH BIT RATE DIGITAL SUBSCRIBER LINE (HDSL) COMPATIBLE LOOP																
		2 Wire Unbundled HDSL Loop including manual service inquiry & facility reservation - Zone 1		1	UHL	UHL2X	11.02										
		2 Wire Unbundled HDSL Loop including manual service inquiry & facility reservation - Zone 2		2	UHL	UHL2X	12.56										
		2 Wire Unbundled HDSL Loop including manual service inquiry & facility reservation - Zone 3		3	UHL	UHL2X	13.11										
		2 Wire Unbundled HDSL Loop without manual service inquiry and facility reservation - Zone 1		1	UHL	UHL2W	11.02										
		2 Wire Unbundled HDSL Loop without manual service inquiry and facility reservation - Zone 2		2	UHL	UHL2W	12.56										
		2 Wire Unbundled HDSL Loop without manual service inquiry and facility reservation - Zone 3		3	UHL	UHL2W	13.11										
	4-WIRE HIGH BIT RATE DIGITAL SUBSCRIBER LINE (HDSL) COMPATIBLE LOOP																
		4 Wire Unbundled HDSL Loop including manual service inquiry and facility reservation - Zone 1		1	UHL	UHL4X	18.42										
		4-Wire Unbundled HDSL Loop including manual service inquiry and facility reservation - Zone 2		2	UHL	UHL4X	16.48										
		4-Wire Unbundled HDSL Loop including manual service inquiry and facility reservation - Zone 3		3	UHL	UHL4X	19.37										
		4-Wire Unbundled HDSL Loop without manual service inquiry and facility reservation - Zone 1		1	UHL	UHL4W	18.42										
		4-Wire Unbundled HDSL Loop without manual service inquiry and facility reservation - Zone 2		2	UHL	UHL4W	16.48										
		4-Wire Unbundled HDSL Loop without manual service inquiry and facility reservation - Zone 3		3	UHL	UHL4W	19.37										
	4-WIRE DS1 DIGITAL LOOP																
		4-Wire DS1 Digital Loop - Zone 1		1	USL	USLXX	91.44										
		4-Wire DS1 Digital Loop - Zone 2		2	USL	USLXX	156.40										
		4-Wire DS1 Digital Loop - Zone 3		3	USL	USLXX	263.52										
HIGH CAPACITY UNBUNDLED LOCAL LOOP																	
		High Capacity Unbundled Local Loop - DS3 - Per Mile per month			UE3	1L5ND	14.10										
		High Capacity Unbundled Local Loop - DS3 - Facility Termination per month			UE3	UE3PX	352.31										
		High Capacity Unbundled Local Loop - STS-1 - Per Mile per month			UDLSX	1L5ND	14.10										
		High Capacity Unbundled Local Loop - STS-1 - Facility Termination per month			UDLSX	UDLS1	360.51										
UNBUNDLED DEDICATED TRANSPORT																	
	INTEROFFICE CHANNEL - DEDICATED TRANSPORT																
		Interoffice Channel - Dedicated Channel - DS1 - Per Mile per month			U1TD1	1L5XX	0.39										
		Interoffice Channel - Dedicated Tranport - DS1 - Facility Termination			U1TD1	U1TF1	88.71										
		Interoffice Channel - Dedicated Transport - DS3 - Per Mile per month			U1TD3	1L5XX	9.22										
		Interoffice Channel - Dedicated Transport - DS3 - Facility Termination per month			U1TD3	U1TF3	1012.75										
		Interoffice Channel - Dedicated Transport - STS-1 - Per Mile per month			U1TS1	1L5XX	9.22										
		Interoffice Channel - Dedicated Transport - STS-1 - Facility Termination			U1TS1	U1TFS	1012.63										
	UNBUNDLED DARK FIBER																
		Dark Fiber - Interoffice Transport, Per Four Fiber Strands, Per Route Mile Or Fraction Thereof			UDF, UDFCX	1L5DF	41.87										
ENHANCED EXTENDED LINK (EELs)																	

UNBUNDLED NETWORK ELEMENTS - South Carolina														Attachment: 2 Exh. B			
CATEGORY		RATE ELEMENTS	Interim	Zone	BCS	USOC	RATES ($)					Svc Order Submitted Elec per LSR	Svc Order Submitted Manually per LSR	Incremental Charge - Manual Svc Order vs. Electronic-1st	Incremental Charge - Manual Svc Order vs. Electronic-Add'l	Incremental Charge - Manual Svc Order vs. Electronic-Disc 1st	Incremental Charge - Manual Svc Order vs. Electronic-Disc Add'l
							Rec	Nonrecurring		Nonrecurring Disconnect		OSS Rates ($)					
								First	Add'l	First	Add'l	SOMEC	SOMAN	SOMAN	SOMAN	SOMAN	SOMAN
	NOTE: The monthly recurring and non-recurring charges below will apply and the Switch-As-Is Charge will not apply for UNE combinations provisioned as ' Ordinarily Combined' Network Elements.																
	NOTE: The monthly recurring and the Switch-As-Is Charge and not the non-recurring charges below will apply for UNE combinations provisioned as ' Currently Combined' Network Elements.																
	EXTENDED 4-WIRE DS1 DIGITAL EXTENDED LOOP WITH DEDICATED DS1 INTEROFFICE TRANSPORT																
		4-Wire DS1 Digital Loop in Combination - Zone 1		1	UNC1X	USLXX	104.50										
		4-Wire DS1 Digital Loop in Combination - Zone 2		2	UNC1X	USLXX	178.74										
		4-Wire DS1 Digital Loop in Combination - Zone 3		3	UNC1X	USLXX	301.17										
		Interoffice Transport - Dedicated - DS1 combination - Per Mile per month			UNC1X	1L5XX	0.31										
		Interoffice Transport - Dedicated - DS1 combination - Facility Termination per month			UNC1X	U1TF1	88.71										
	EXTENDED DS3 DIGITAL EXTENDED LOOP WITH DEDICATED DS3 INTEROFFICE TRANSPORT																
		DS3 Local Loop in combination - per mile per month			UNC3X	1L5ND	14.10										
		DS3 Local Loop in combination - Facility Termination per month			UNC3X	UE3PX	352.31										
		Interoffice Transport - Dedicated - DS3 - Per Mile per month			UNC3X	1L5XX	9.22										
		Interoffice Transport - Dedicated - DS3 combination - Facility Termination per month			UNC3X	U1TF3	1012.75										
	EXTENDED STS-1 DIGITAL EXTENDED LOOP WITH DEDICATED STS-1 INTEROFFICE TRANSPORT																
		STS-1 Local Loop in combination - per mile per month			UNCSX	1L5ND	14.10										
		STS-1 Local Loop in combination - Facility Termination per month			UNCSX	UDLS1	360.51										
		Interoffice Transport - Dedicated - STS-1 combination - per mile per month			UNCSX	1L5XX	9.22										
		Interoffice Transport - Dedicated - STS-1 combination - Facility Termination per month			UNCSX	U1TFS	1012.63										

Attachment 3

Network Interconnection

TABLE OF CONTENTS

1. GENERAL 3

2. DEFINITIONS: (FOR THE PURPOSE OF THIS ATTACHMENT) 3

3. NETWORK INTERCONNECTION 4

4. INTERCONNECTION TRUNK GROUP ARCHITECTURES 7

5. NETWORK DESIGN AND MANAGEMENT FOR INTERCONNECTION 13

6. FORECASTING FOR TRUNK PROVISIONING 14

7. LOCAL DIALING PARITY 16

8. INTERCONNECTION COMPENSATION 16

9. ORDERING CHARGES 22

10. BASIC 911 AND E911 INTERCONNECTION 22

11. SS7 NETWORK INTERCONNECTION 23

Rates	**Exhibit A**
Basic Architecture	**Exhibit B**
One Way Architecture	**Exhibit C**
Two Way Architecture	**Exhibit D**
Supergroup Architecture	**Exhibit E**
AT&T's Jurisdictional Factors Reporting Guide	**Exhibit F**

NETWORK INTERCONNECTION

1. General

1.1 The Parties shall provide interconnection with each other's networks for the transmission and routing of telephone exchange service (Local Traffic), ISP-Bound Traffic, and exchange access (Switched Access Traffic) on the following terms:

2. Definitions: (For the purpose of this Attachment)

For purposes of this attachment only, the following terms shall have the definitions set forth below:

2.1 **Automatic Location Identification (ALI)** is a feature by which the address associated with the calling party's telephone number (ANI) is forwarded to the PSAP for display. Access to the ALI database is described in Attachment 2 to this Agreement.

2.2 **Automatic Number Identification (ANI)** corresponds to the seven-digit telephone number assigned by the serving local exchange carrier.

2.3 **AT&T Trunk Group** is defined as a one-way trunk group carrying AT&T originated traffic to be terminated by TWTC.

2.4 **911 Service** is as described in this Attachment.

2.5 **Call Termination** has the meaning set forth for "termination" in 47CFR § 51.701(d).

2.6 **Call Transport** has the meaning set forth for "transport" in 47 CFR § 51.701(c).

2.7 **Call Transport and Termination** is used collectively to mean the switching and transport functions from the Interconnection Point to the last point of switching.

2.8 **Common (Shared) Transport** is defined as the transport of the originating Party's traffic by the terminating Party over the terminating Party's common (shared) facilities between (1) the terminating Party's tandem switch and end office switch, (2) between the terminating Party's tandem switches, and/or (3) between the terminating Party's host and remote end office switches. All switches referred herein must be entered into the Local Exchange Routing Guide (LERG).

2.9 **Dedicated Interoffice Facility** is defined as a switch transport facility between a Party's Serving Wire Center and the first point of switching within the LATA on the other Party's network.

2.10 **End Office Switching** is defined as the function that establishes a communications path between the trunk side and line side of the End Office switch.

2.11 **Fiber Meet** is an interconnection arrangement whereby the Parties physically interconnect their networks via an optical fiber interface at which one Party's facilities, provisioning, and maintenance responsibility begins and the other Party's responsibility ends.

2.12 **Final Trunk Group** is defined as the trunk group that does not carry overflow traffic.

2.13 **Integrated Services Digital Network User Part (ISUP)** is a message protocol to support call set-up and release for interoffice voice connections over SS7 signaling.

2.14 **Interconnection Point (IP)** is the physical telecommunications equipment interface that interconnects the networks of AT&T and TWTC.

2.15 **ISP-Bound Traffic** is as defined in Section 8.1.2 of this Attachment.

2.16 **Local Channel** is defined as a switched transport facility between a Party's Interconnection Point and the IP's Serving Wire Center.

2.17 **Local Traffic** is as defined in Section 8.1.1 of this Attachment.

2.18 **Public Safety Answering Point (PSAP)** is the answering location for 911 calls.

2.19 **Selective Routing (SR)** is a standard feature that routes an E911 call from the tandem to the designated PSAP based upon the address of the ANI of the calling party.

2.20 **Serving Wire Center** is defined as the wire center owned by one Party from which the other Party would normally obtain dial tone for its IP.

2.21 **Signaling System 7 (SS7)/Common Channel Signaling 7 (CCS7)** is an out-of-band signaling system used to provide basic routing information, call set-up and other call termination functions. Signaling is removed from the voice channel and put on a separate data network.

2.22 **Tandem Switching** is defined as the function that establishes a communications path between two (2) switching offices through a third switching office through the provision of trunk side to trunk side switching.

2.23 **Transit Traffic** is traffic originating on TWTC's network that is switched and/or transported by AT&T and delivered to a third party's network, or traffic originating on a third party's network that is switched and/or transported by AT&T and delivered to TWTC's network.

3. Network Interconnection

3.1 This Attachment pertains only to the provision of network interconnection where TWTC owns, leases from a third party or otherwise provides its own switch (es).

3.2 Network interconnection may be provided by the Parties at any technically feasible point within AT&T's network. Requests to AT&T for interconnection at points other than as set forth in this Attachment may be made through the Bona Fide Request/New Business Request (BFR/NBR) process set out in this Agreement.

3.2.1 Each Party is responsible for providing, engineering and maintaining the network on its side of the IP. The IP must be located within AT&T's serving territory in the LATA in which traffic is originating. The IP determines the point at which the originating Party shall pay the terminating Party for the Call Transport and Termination of Local Traffic, ISP-Bound Traffic and IntraLATA Toll Traffic. In selecting the IP, both Parties will act in good faith and select the point that is most efficient for both Parties.

3.2.2 Pursuant to the provisions of this Attachment, the location of the initial IP in a given LATA shall be established by mutual agreement of the Parties. Subject to the requirements for installing additional IPs, as set forth below, any IPs existing prior to the Effective Date of the Agreement will be accepted as initial IPs and will not require re-grooming. When the Parties mutually agree to utilize two-way interconnection trunk groups for the exchange of Local Traffic, ISP-Bound Traffic and IntraLATA Toll Traffic between each other, the Parties shall mutually agree to the location of IP(s). If the Parties are unable to agree to a mutual initial IP, each Party, as originating Party, shall establish a single IP in the LATA for the delivery of its originated Local Traffic, ISP-Bound Traffic and IntraLATA Toll Traffic to the other Party for Call Transport and Termination by the terminating Party.

3.2.3 Additional IP(s) in a LATA may be established by mutual agreement of the Parties. Notwithstanding the foregoing, additional IP(s) in a particular LATA shall be established, at the request of either Party, when the Local Traffic and ISP-Bound Traffic exceeds eight point nine (8.9) million minutes per month for three (3) consecutive months at the proposed location of the additional IP. AT&T will not request the establishment of an IP in an AT&T Central Office where physical or virtual collocation space is not available or where AT&T fiber connectivity is not available. When the Parties agree to utilize two-way interconnection trunk groups for the exchange of Local Traffic, ISP-Bound Traffic and IntraLATA Toll Traffic the Parties must agree to the location of the IP(s).

3.3 Interconnection via Dedicated Facilities. With the exception of Transit Traffic, the Parties shall institute a "bill and keep" compensation plan under which neither Party will charge the other Party recurring and nonrecurring charges for trunks (i.e., one-way or two-way), trunk ports and associated dedicated facilities for the exchange of Local Traffic (non-transit) and ISP-Bound Traffic (non-transit). The appropriate rate elements that are subject to their "bill and keep" compensation plan are set forth in Exhibit A. Each Party has the obligation to install and

maintain the appropriate trunks, trunk ports and associated facilities on its respective side of the IP and is responsible for bearing its costs for such trunks, trunk ports and associated facilities on its side of the IP. Both Parties, as appropriate, shall be compensated for the ordering of trunks, trunk ports and facilities used exclusively for transit traffic and for ancillary traffic types including, but not limited to OS/DA. The Parties agree that charges for such trunks, trunk ports and facilities are as set forth in Exhibit A or to the extent a rate associated with the interconnecting trunk group is not set forth in Exhibit A, the rate shall be as set forth in the appropriate Party's tariff as filed and effective with the FCC or Commission, or reasonable and non-discriminatory web posted listing if the FCC or Commission does not require filing of a tariff.

3.4 Local Channel Facilities. As part of Call Transport and Termination, the originating Party may obtain Local Channel facilities from the terminating Party. The percentage of Local Channel facilities utilized for Local Traffic and ISP-Bound Traffic shall be determined based upon the application of the Percent Local Facility (PLF) Factor as set forth in this Attachment. The charges applied to the percentage of Local Channel facilities used for Local Traffic and ISP-Bound Traffic as determined by the PLF are as set forth in Exhibit A to this Attachment. The remaining percentage of Local Channel facilities shall be billed at AT&T's applicable access tariff rates.

3.5 Dedicated Interoffice Facilities. As a part of Call Transport and Termination, the originating Party may obtain Dedicated Interoffice Facilities from the terminating Party. The percentage of Dedicated Interoffice Facilities utilized for Local Traffic and ISP-Bound Traffic shall be determined based upon the application of the Percent Local Facility (PLF) Factor as set forth in this Attachment. The charges applied to the percentage of the Dedicated Interoffice Facilities used for Local Traffic and ISP-Bound Traffic as determined by the PLF are as set forth in Exhibit A to this Attachment. The remaining percentage of the Dedicated Interoffice Facilities shall be billed at AT&T's applicable access tariff rates.

3.6 Fiber Meet. Notwithstanding Section 3.2.1, 3.2.2, and 3.2.3 above, if TWTC elects to establish interconnection with AT&T pursuant to a Fiber Meet Local Channel, TWTC and AT&T shall jointly engineer, operate and maintain a Synchronous Optical Network (SONET) transmission system by which they shall interconnect their transmission and routing of Local Traffic and ISP-Bound Traffic via a Local Channel at either the DS1 or DS3 level. The Parties shall work jointly to determine the specific transmission system. However, TWTC's SONET transmission system must be compatible with AT&T's equipment, and the Data Communications Channel (DCC) must be turned off.

3.6.1 Each Party, at its own expense, shall procure, install and maintain the agreed upon SONET transmission system in its network.

3.6.2 The Parties shall agree to a Fiber Meet point between the AT&T Serving Wire Center and the TWTC Serving Wire Center. The Parties shall deliver their fiber optic facilities to the Fiber Meet point with sufficient spare length to reach the fusion splice point for the Fiber Meet Point. AT&T shall, at its own expense, provide and maintain the fusion splice point for the Fiber Meet. A building type Common Language Location Identification (CLLI) code will be established for each Fiber Meet point. All orders for interconnection facilities from the Fiber Meet point shall indicate the Fiber Meet point as the originating point for the facility.

3.6.3 Upon verbal request by TWTC, AT&T shall allow TWTC access to the fusion splice point for the Fiber Meet point for maintenance purposes on TWTC's side of the Fiber Meet point.

3.6.3.1 Neither Party shall charge the other for its Local Channel portion of the Fiber Meet facility used exclusively for Local Traffic and ISP-Bound Traffic. The percentage of Local Channel facilities utilized for Local Traffic and ISP-Bound Traffic shall be determined based upon the application of the Percent Local Facility (PLF) Factor as set forth in this Attachment. The charges applied to the percentage of Local Channel facilities used for Local Traffic and ISP-Bound Traffic as determined by the PLF are as set forth in Exhibit A to this Attachment. The remaining percentage of Local Channel facilities shall be billed at AT&T's applicable access tariff rates. Charges for switched and special access services shall be billed in accordance with the applicable access service tariff.

4. Interconnection Trunk Group Architectures

4.1 AT&T and TWTC shall establish interconnecting trunk groups and trunk group configurations between networks, including the use of one-way or two-way trunks in accordance with the following provisions set forth in this Agreement**.** For trunking purposes, traffic will be routed based on the digits dialed by the originating End User and in accordance with the LERG.

4.2 TWTC shall establish an interconnection trunk group(s) to at least one AT&T access tandem within the LATA for the delivery of TWTC's originated Local Traffic, ISP-Bound Traffic and IntraLATA Toll Traffic and for the receipt and delivery of Transit Traffic. To the extent TWTC desires to deliver Local Traffic, ISP-Bound Traffic, IntraLATA Toll Traffic and/or Transit Traffic to AT&T access tandems within the LATA, other than the tandems(s) to which TWTC has established interconnection trunk groups, TWTC shall pay the appropriate rates for Multiple Tandem Access, as described in this Attachment.

4.2.1 Notwithstanding the forgoing, TWTC shall establish an interconnection trunk group(s) to all AT&T access and local tandems in the LATA where TWTC has homed (i.e. assigned) its NPA/NXXs. TWTC shall home its NPA/NXXs on the AT&T tandems that serve the exchange rate center areas to which the NPA/NXXs

are assigned. The specified exchange rate center assigned to each AT&T tandem is defined in the LERG. TWTC shall enter its NPA/NXX access and/or local tandem homing arrangements into the LERG.

4.3 Switched access traffic will be delivered to and from Interexchange Carriers (IXCs) based on TWTC's NXX access tandem homing arrangement as specified by TWTC in the LERG.

4.4 Any TWTC interconnection request that (1) deviates from the interconnection trunk group architectures as described in this Agreement, (2) affects traffic delivered to TWTC from an AT&T switch, and (3) requires special AT&T switch translations and other network modifications will require TWTC to submit a BFR/NBR via the BFR/NBR Process as set forth in this Agreement. TWTC shall be responsible for ordering and paying for any two-way trunks carrying Transit Traffic, or the portion of Transit Traffic on a multi-use trunk group or facility.

4.5 All trunk groups will be provisioned as Signaling System 7 (SS7) capable where technically feasible. If SS7 is not technically feasible, multi-frequency (MF) protocol signaling shall be used.

4.6 In cases where TWTC is also an IXC, the IXC's Feature Group D (FG D) trunk group(s) must remain separate from the local interconnection trunk group(s).

4.7 Each Party shall order interconnection trunks and trunk group including trunk and trunk group augmentations via the ASR process. A Firm Order Confirmation (FOC) shall be returned to the ordering Party, after receipt of a valid, error free ASR, within the timeframes set forth in each state's applicable Performance Measures. Notwithstanding the foregoing, blocking situations and projects shall be managed through AT&T's Carrier Interconnection Switching Center (CISC) Project Management Group and TWTC's equivalent trunking group, and FOCs for such orders shall be returned in the timeframes applicable to the project. A project is defined as (1) a new trunk group or (2) a request for more than one hundred and ninety-two (192) trunks on a single or multiple group(s) in a given AT&T local calling area.

4.8 <u>Interconnection Trunk Groups for Exchange of Local Traffic and Transit Traffic.</u> Upon mutual agreement of the Parties in a joint planning meeting, the Parties shall exchange Local Traffic on two-way interconnection trunk group(s) with the quantity of trunks being mutually determined and the provisioning being jointly coordinated. Furthermore, the Parties shall agree upon the IP(s) for two-way interconnection trunk groups transporting both Parties' Local Traffic, ISP-Bound Traffic and IntraLATA Toll Traffic. TWTC shall order such two-way trunks via the Access Service Request (ASR) process. AT&T will use the Trunk Group Service Request (TGSR) to request changes in trunking. Furthermore, the Parties shall jointly review trunk performance and forecasts in accordance with Section 6 of this Attachment. The Parties' use of two-way interconnection trunk groups for

the transport of Local Traffic, ISP-Bound Traffic and IntraLATA Toll Traffic between the Parties does not preclude either Party from establishing additional one-way interconnection trunks for the delivery of its originated Local Traffic, ISP-Bound Traffic and IntraLATA Toll Traffic to the other Party. Other trunk groups for operator services, directory assistance and intercept must be established pursuant to the applicable AT&T tariff or other negotiated agreement, if applicable, if service is requested.

4.8.1 AT&T Access Tandem Interconnection. AT&T access tandem interconnection at a single access tandem provides access to those end offices subtending that access tandem (Intratandem Access). Access tandem interconnection is available for any of the following access tandem architectures

4.8.1.1 Basic Architecture. In the basic architecture, TWTC's originating Local Traffic, ISP-Bound Traffic and IntraLATA Toll Traffic and originating and terminating Transit Traffic is transported on a single two-way trunk group between TWTC and AT&T access tandem(s) within a LATA to provide Intratandem Access. This trunk group carries Transit Traffic between TWTC and Independent Companies, Interexchange Carriers, other CLECs, CMRS providers that have a Meet Point Billing arrangement with AT&T and other network providers with which TWTC desires to exchange traffic. This trunk group also carries TWTC originated Transit Traffic transiting a single AT&T access tandem destined to third party tandems such as an Independent Company tandem or other CLEC tandem. AT&T originated Local Traffic, ISP-Bound Traffic and IntraLATA Toll Traffic is transported on a separate single one-way trunk group terminating to TWTC. The LERG contains current routing and tandem serving arrangements. The basic Architecture is illustrated in Exhibit B.

4.8.1.2 One-Way Trunk Group Architecture. In one-way trunk group architecture, the Parties interconnect using three separate trunk groups. A one-way trunk group provides Intratandem Access for TWTC-originated Local Traffic, ISP-Bound Traffic and IntraLATA Toll Traffic destined for AT&T End Users. A second one-way trunk group carries AT&T-originated Local Traffic, ISP-Bound Traffic and IntraLATA Toll Traffic destined for TWTC End-Users. A two-way trunk group provides Intratandem Access for TWTC's originating and terminating Transit Traffic. This trunk group carries Transit Traffic between TWTC and Independent Companies, Interexchange Carriers, other CLECs, CMRS providers that have a Meet Point Billing arrangement with AT&T, and other network providers with which TWTC exchanges traffic. This trunk group also carries TWTC originated Transit Traffic transiting a single AT&T access tandem destined to third party tandems such as an Independent Company tandem or other CLEC tandem. AT&T originated Local Traffic, ISP-Bound Traffic and IntraLATA Toll Traffic is transported on a separate single one-way trunk group terminating to TWTC. The LERG contains current routing and tandem serving arrangements. The one-way trunk group architecture is illustrated in Exhibit C.

4.8.1.3 Two-Way Trunk Group Architecture. The two-way trunk group Architecture establishes one two-way trunk group to provide Intratandem Access for the exchange of Local Traffic, ISP-Bound Traffic and IntraLATA Toll Traffic between TWTC and AT&T. In addition, a separate two-way transit trunk group must be established for TWTC's originating and terminating Transit Traffic. This trunk group carries Transit Traffic between TWTC and Independent Companies, Interexchange Carriers, other CLECs, CMRS providers that have a Meet Point Billing arrangement with AT&T, and other network providers with which TWTC exchanges traffic. This trunk group also carries TWTC originated Transit Traffic transiting a single AT&T access tandem destined to third party tandems such as an Independent Company tandem or other CLEC tandem. AT&T originated traffic may, in order to prevent or remedy traffic blocking situations, be transported on a separate single one-way trunk group terminating to TWTC. However, where TWTC is responsive in a timely manner to AT&T's transport needs for its originated traffic, AT&T originating traffic will be placed on the two-way Local Traffic trunk group carrying ISP-Bound Traffic and IntraLATA Toll Traffic. The LERG contains current routing and tandem serving arrangements. The two-way trunk group architecture is illustrated in Exhibit D.

4.8.1.4 Supergroup Architecture. In the supergroup architecture, the Parties' Local Traffic, ISP-Bound Traffic and IntraLATA Toll Traffic and TWTC's Transit Traffic are exchanged on a single two-way trunk group between TWTC and AT&T to provide Intratandem Access to TWTC. This trunk group carries Transit Traffic between TWTC and Independent Companies, Interexchange Carriers, other CLECs, CMRS providers that have a Meet Point Billing arrangement with AT&T, and other network providers with which TWTC desires to exchange traffic. This trunk group also carries TWTC originated Transit Traffic transiting a single AT&T access tandem destined to third party tandems such as an Independent Company tandem or other CLEC tandem. AT&T originated traffic may, in order to prevent or remedy traffic blocking situations, be transported on a separate single one-way trunk group terminating to TWTC. However, where TWTC is responsive in a timely manner to AT&T's transport needs for its originated traffic, AT&T originating traffic will be placed on the Supergroup. Other trunk groups for operator services, directory assistance, emergency services and intercept must be established pursuant to the applicable AT&T tariff if service is requested. The LERG contains current routing and tandem serving arrangements. The Supergroup architecture is illustrated in Exhibit E.

4.8.1.5 Multiple Tandem Access Interconnection. Where TWTC does not choose access tandem interconnection at every AT&T access tandem within a LATA, TWTC must utilize AT&T's multiple tandem access interconnection (MTA). To utilize MTA TWTC must establish an interconnection trunk group(s) at a minimum of one AT&T access tandem within each LATA as required. AT&T will route TWTC's originated Local Traffic, ISP-Bound Traffic and IntraLATA Toll Traffic for LATA wide transport and termination. TWTC must also establish an

interconnection trunk group(s) at all AT&T access tandems where TWTC NXXs are homed as described in Section 4.2.1 above. If TWTC does not have NXXs homed at any particular AT&T access tandem within a LATA and elects not to establish an interconnection trunk group(s) at such AT&T access tandem, TWTC can order MTA in each AT&T access tandem within the LATA where it does have an interconnection trunk group(s) and AT&T will terminate TWTC's Local Traffic, ISP-Bound Traffic and IntraLATA Toll Traffic to End-Users served through those AT&T access tandems where TWTC does not have an interconnection trunk group(s). MTA shall be provisioned in accordance with AT&T's Ordering Guidelines.

4.8.1.5.1 TWTC may also utilize MTA to route its originated Transit Traffic; provided, however, that MTA may not be utilized to route switched access traffic that transits the AT&T network to an IXC. Switched access traffic originated by or terminated to TWTC will be delivered to and from IXCs based on TWTC's NXX access tandem homing arrangement as specified by TWTC in the LERG.

4.8.1.5.2 Compensation for MTA shall be at the applicable tandem switching and transport charges specified in Exhibit A to this Attachment and shall be billed in addition to any Call Transport and Termination charges.

4.8.1.5.3 To the extent TWTC does not purchase MTA in a LATA served by multiple access tandems, TWTC must establish an interconnection trunk group(s) to every access tandem in the LATA to serve the entire LATA. To the extent TWTC routes its traffic in such a way that utilizes AT&T's MTA service without properly ordering MTA, TWTC shall pay AT&T the associated MTA charges.

4.8.2 Local Tandem Interconnection. Local Tandem Interconnection arrangement allows TWTC to establish an interconnection trunk group(s) at AT&T local tandems for: (1) the delivery of TWTC-originated Local Traffic and ISP-Bound Traffic transported and terminated by AT&T to AT&T end offices served by those AT&T local tandems, and (2) for local Transit Traffic transported by AT&T for third party network providers who have also established an interconnection trunk group(s) at those AT&T local tandems.

4.8.2.1 When a specified local calling area is served by more than one AT&T local tandem, TWTC must designate a "home" local tandem for each of its assigned NPA/NXXs and establish trunk connections to such local tandems. Additionally, TWTC may choose to establish an interconnection trunk group(s) at the AT&T local tandems where it has no codes homing but is not required to do so. TWTC may deliver Local Traffic and ISP-Bound Traffic to a "home" AT&T local tandem that is destined for other AT&T or third party network provider end offices subtending other AT&T local tandems in the same local calling area where TWTC does not choose to establish an interconnection trunk group(s). It is TWTC's responsibility to enter its own NPA/NXX local tandem homing arrangements into the LERG either directly or via a vendor in order for other third party network

providers to determine appropriate traffic routing to TWTC's codes. Likewise, TWTC shall obtain its routing information from the LERG.

4.8.2.2 Notwithstanding establishing an interconnection trunk group(s) to AT&T's local tandems, TWTC must also establish an interconnection trunk group(s) to AT&T access tandems within the LATA on which TWTC has NPA/NXXs homed for the delivery of Interexchange Carrier Switched Access (SWA) and toll traffic, and traffic to Type 2A CMRS connections located at the access tandems. AT&T shall not switch SWA traffic through more than one AT&T access tandem. SWA, Type 2A CMRS or toll traffic routed to the local tandem in error will not be backhauled to the AT&T access tandem for completion. (Type 2A CMRS interconnection is defined in AT&T's A35 General Subscriber Services Tariff).

4.8.2.3 AT&T's provisioning of Local Tandem Interconnection assumes that TWTC has executed the necessary local interconnection agreements with the other third party network providers subtending those local tandems as required by the Act.

4.8.3 Direct End Office-to-End Office Interconnection. Direct End Office-to-End Office one-way or two-way interconnection trunk groups allow for the delivery of a Party's originating Local Traffic, ISP-Bound Traffic and IntraLATA Toll Traffic to the terminating Party on a direct end office-to-end office basis.

4.8.3.1 The Parties shall utilize direct end office-to-end office trunk groups under any one of the following conditions:

4.8.3.1.1 Tandem Exhaust. If a tandem through which the Parties are interconnected is unable to, or is forecasted to be unable to support additional traffic loads for any period of time, the Parties will mutually agree on an end office trunking plan that will alleviate the tandem capacity shortage and ensure completion of traffic between TWTC and AT&T.

4.8.3.1.2 Traffic Volume. To the extent either Party has the capability to measure the amount of traffic between TWTC's switch and an AT&T end office and where such traffic exceeds or is forecasted to exceed a single DS1 of traffic per month, then the Parties shall install and retain direct end office trunking sufficient to handle such traffic volumes. Either Party will install additional capacity between such points when overflow traffic exceeds or is forecasted to exceed a single DS1 of traffic per month. In the case of one-way trunking, additional trunking shall only be required by the Party whose trunking has achieved the preceding usage threshold.

4.8.3.1.3 Mutual Agreement. The Parties may install direct end office trunking upon mutual agreement in the absence of conditions (1) or (2) above.

4.8.4 Transit Traffic Trunk Group. Transit Traffic trunks can either be two-way trunks or two one-way trunks ordered by TWTC to deliver and receive Transit Traffic.

Establishing Transit Traffic trunks at AT&T access and local tandems provides intratandem access to the third parties also interconnected at those tandems. TWTC shall be responsible for all recurring and non-recurring charges associated with Transit Traffic trunks and facilities.

4.8.4.1 Toll Free Traffic. If TWTC chooses AT&T to perform the Service Switching Point (SSP) Function (i.e., handle Toll Free database queries) from AT&T's switches, all TWTC originating Toll Free traffic will be routed over the Transit Traffic Trunk Group and shall be delivered using GR-394 format. Carrier Code "0110" and Circuit Code (to be determined for each LATA) shall be used for all such calls.

4.8.4.1.1 TWTC may choose to perform its own Toll Free database queries from its switch. In such cases, TWTC will determine the nature (local/intraLATA/interLATA) of the Toll Free call (local/IntraLATA/InterLATA) based on the response from the database. If the call is an AT&T local or intraLATA Toll Free call, TWTC will route the post-query local or IntraLATA converted ten-digit local number to AT&T over the local or intraLATA trunk group. If the call is a third party (ICO, IXC, CMRS or other CLEC) local or intraLATA Toll Free call, TWTC will route the post-query local or intraLATA converted ten-digit local number to AT&T over the Transit Traffic Trunk Group and TWTC shall provide to AT&T a Toll Free billing record when appropriate. If the query reveals the call is an interLATA Toll Free call, TWTC will route the post-query interLATA Toll Free call (1) directly from its switch for carriers interconnected with its network or (2) over the Transit Traffic Trunk Group to carriers that are not directly connected to TWTC's network but that are connected to AT&T's access tandem.

4.8.5 All post-query Toll Free calls for which TWTC performs the SSP function, if delivered to AT&T, shall be delivered using GR-394 format for calls destined to IXCs, and GR-317 format for calls destined to end offices that directly subtend an AT&T access tandem within the LATA.

5. NETWORK DESIGN AND MANAGEMENT FOR INTERCONNECTION

5.1 Network Management and Changes. The Parties will exchange toll-free maintenance contact numbers and escalation procedures. The Parties will provide public notice of network changes in accordance with applicable federal and state rules and regulations.

5.2 Interconnection Technical Standards. The interconnection of all networks will be based upon accepted industry/national guidelines for transmission standards and traffic blocking criteria. Interconnecting facilities shall conform, at a minimum, to the telecommunications industry standard of DS-1 pursuant to Telcordia Standard No. GR-NWT-00499. Where TWTC chooses to utilize Signaling System 7 signaling, also known as Common Channel Signaling (SS7), SS7 connectivity is required between the TWTC switch and the AT&T Signaling Transfer Point

(STP). AT&T will provide SS7 signaling using Common Channel Signaling Access Capability in accordance with the technical specifications set forth in the AT&T Guidelines to Technical Publication, GR-905-Core. Facilities of each Party shall provide the necessary on-hook, off-hook answer and disconnect supervision and shall provide calling number ID (Calling Party Number) when technically feasible.

5.3 Network Management Controls. Both Parties will work cooperatively to apply sound network management principles by invoking appropriate network management controls to alleviate or prevent network congestion.

6. Forecasting for Trunk Provisioning

6.1 If an initial forecast has not been previously provided, within six (6) months after execution of this Agreement, TWTC shall provide an initial interconnection trunk group forecast for each LATA in which it plans to provide service within AT&T's region. Upon receipt of TWTC's forecast, the Parties shall conduct a joint planning meeting to develop a joint interconnection trunk group forecast. Each forecast provided under this Section shall be deemed "Confidential Information" under the General Terms and Conditions of this Agreement.

6.1.1 At a minimum, the forecast shall include the projected quantity of Transit Trunks, TWTC-to-AT&T one-way trunks (TWTC Trunks), AT&T-to-TWTC one-way trunks (AT&T Trunk Groups) and/or two-way interconnection trunks, if the Parties have agreed to interconnect using two-way trunking to transport the Parties' Local Traffic, ISP-Bound Traffic and IntraLATA Toll Traffic. The quantities shall be projected for a minimum of six (6) months and shall include an estimate of the current year plus the next two (2) years total forecasted quantities. The Parties shall mutually develop AT&T Trunk Groups and/or two-way interconnection trunk forecast quantities.

6.1.2 All forecasts shall include, at a minimum, Access Carrier Terminal Location (ACTL), trunk group type (local/intraLATA toll, Transit, Operator Services, 911, etc.), A location/Z location (CLLI codes for TWTC location and AT&T location where the trunks shall terminate), interface type (e.g., DS1), Direction of Signaling, Trunk Group Number, if known, (commonly referred to as the 2-6 code) and forecasted trunks in service each year (cumulative).

6.2 Once initial interconnection trunk forecasts have been developed, TWTC shall continue to provide interconnection trunk forecasts at mutually agreeable intervals. TWTC shall use its best efforts to make the forecasts as accurate as possible based on reasonable engineering criteria. The Parties shall continue to develop Reciprocal Trunk Group and/or two-way interconnection trunk forecasts as described in Section 6.1.1.

6.3 The submission and development of interconnection trunk forecasts shall not replace the ordering process for local interconnection trunks. Each Party shall exercise its best efforts to provide the quantity of interconnection trunks mutually forecasted. However, the provision of the forecasted quantity of interconnection trunks is subject to trunk terminations and facility capacity existing at the time the trunk order is submitted. Furthermore, the receipt and development of trunk forecasts does not imply any liability for failure to perform if capacity (trunk terminations or facilities) is not available for use at the forecasted time.

6.4 Trunk Utilization

6.4.1 To the extent that any interconnection trunk group is utilized at a time-consistent busy hour of eighty percent (80%) or greater, the Parties may review the trunk groups and, if necessary, shall negotiate in good faith for the installation of augmented facilities.

6.4.2 For the trunk groups, AT&T and TWTC shall monitor traffic on each interconnection trunk group that is ordered and installed. The Parties agree that within ninety (90) days of the installation of the AT&T trunk or trunks, the trunks will be utilized at 60 percent (60%) of the time consistent busy hour utilization level. The Parties agree that within one hundred and eighty (180) days of the installation of a trunk or trunks, the trunks will be utilized at eighty percent (80%) of the time consistent busy hour utilization level. Any trunk or trunks not meeting the minimum thresholds set forth in this Section are defined as "Under-utilized" trunks. AT&T will request the disconnection of any Under-utilized trunk(s)

6.4.3 AT&T's CISC will notify TWTC of any under-utilized trunk groups and the number of trunks that AT&T wishes to disconnect. AT&T will provide supporting information either by email or facsimile to the designated TWTC interface. TWTC will provide concurrence with the disconnection in seven (7) business days or will provide specific information supporting why the trunks should not be disconnected. Such supporting information should include expected traffic volumes (including traffic volumes generated due to Local Number Portability) and the timeframes within which TWTC expects to need such trunks. AT&T's CISC Project Manager and CCM will discuss the information with TWTC to determine if agreement can be reached on the number of trunks to be removed. If no agreement can be reached, TWTC will issue disconnect orders to AT&T. The due date of these orders will be four (4) weeks after TWTC was first notified in writing of the underutilization of the trunk groups.

6.4.3.1 To the extent that any trunk group is utilized at a time-consistent busy hour of eighty percent (80%) or greater, the Parties may review the trunk groups and, if necessary, shall negotiate in good faith for the installation of augmented facilities.

7. Local Dialing Parity

7.1 AT&T and TWTC shall provide local and toll dialing parity, as defined in FCC rules and regulations, with no unreasonable dialing delays. Dialing parity shall be provided for all originating telecommunications services that require dialing to route a call.

8. Interconnection Compensation

8.1 Compensation for Call Transportation and Termination for Local Traffic, ISP-Bound Traffic and IntraLATA Toll Traffic

8.1.1 For the purposes of this Attachment and for reciprocal compensation between the Parties pursuant to this Attachment, Local Traffic is defined as any traffic that is originated by an end user of one Party in one LATA and terminated to an end user of the other Party within the same LATA on that Party's network except for those calls that are originated or terminated through switched access arrangements as established by the ruling regulatory body. Additionally, Local Traffic includes any cross boundary, intrastate/interLATA or interstate/interLATA calls established as a local call by the ruling regulatory body**.**

8.1.2 For purposes of this Attachment and for intercarrier compensation for ISP-Bound Traffic exchanged between the Parties, ISP-Bound Traffic is defined as calls to an information service provider or Internet service provider (ISP) that are dialed by using a local dialing pattern (seven (7) or ten (10) digits) by a calling party in one exchange to an ISP server or modem in the same LATA. ISP-Bound Traffic is not Local Traffic subject to reciprocal compensation, but instead is information access traffic subject to the FCC's jurisdiction.

8.1.3 In accordance with Paragraph 79 of the FCC's ISP Compensation Order, AT&T and TWTC agree to the rebuttable presumption that any of the combined Section 251(b)(5) Traffic and ISP-Bound Traffic delivered to AT&T or TWTC that exceeds a 3:1 ratio of terminating to originating traffic on a statewide basis shall be considered ISP-Bound Traffic for compensation purposes. AT&T and TWTC further agree to the rebuttable presumption that all combined circuit switched Local and ISP-Bound Traffic delivered to AT&T or TWTC that does not exceed a 3:1 ratio of terminating to originating traffic on a statewide basis shall be considered Local Traffic for compensation purposes.

8.1.3.1 Should either Party determine that the 3:1 ratio does not represent the actual traffic composition, it may notify the other Party that it is rebutting the presumption (ISP-Bound Traffic Ratio Notice). If the Parties are unable to agree as to the true composition of the traffic, either Party may petition the Commission for resolution. Such resolution shall be retroactive to the date of the ISP-Bound Traffic Ratio Notice.

8.1.4 The Parties will compensate each other for the transport and termination of Local Traffic and ISP-Bound Traffic as follows:

8.1.4.1 Each Party shall pay compensation to the other Party for the per minute of use rate elements associated with the Call Transport and Termination of Local Traffic. TWTC is entitled to reciprocal compensation for tandem switching in the States of Alabama, Florida, Georgia, Kentucky, Louisiana, Mississippi, North Carolina, South Carolina and Tennessee, since it has proved to AT&T's satisfaction that its switches serve the same geographical area(s) comparable to the area(s) served by AT&T's tandem switch. For the per minute of use rate elements associated with Call Transport and Termination of ISP-Bound Traffic in the States of Alabama, Florida, Georgia, Kentucky, Louisiana, Mississippi, North Carolina, South Carolina, and Tennessee, the Parties shall compensate each other at the rate of $0.0007 per minute of use.

8.1.5 For all states, the elemental rates set forth in Exhibit A of this Agreement shall apply throughout the term of this Agreement for Multiple Tandem Access, as described in Section 4.8.1.5 above, and Transit Traffic, as described in Section 8.12 below.

8.1.6 The appropriate elemental rates set forth in Exhibit A of this Attachment shall apply for Transit Traffic as described in this Attachment and for Multiple Tandem Access as described in this Attachment.

8.1.7 Neither Party shall knowingly represent their originated Switched Access Traffic as Local Traffic or ISP-Bound Traffic for purposes of determining compensation for the call.

8.2 If a Party assigns NPA/NXXs to a specific rate center within the LATA and assigns numbers from those NPA/NXXs to its End Users physically located outside of that LATA, the other Party's traffic originating from within the LATA where the NPA/NXXs are assigned and delivered to the first Party's customer physically located outside of such LATA, shall not be deemed Local Traffic. Further, each Party agrees to identify such interLATA traffic to the other Party and to compensate the other Party for originating and transporting such interLATA traffic at the terminating Party's switched access tariff rates as filed and effective with the Commission or non-discriminatory web-posted listing if the FCC or Commission does not require filing of a tariff.

8.3 If the originating Party does not identify such interLATA traffic to the other Party, the Party receiving the traffic will determine which whole NPA/NXXs on which to charge the applicable rates for originating network access service as reflected in the terminating Party's Access Service Tariff as filed and effective with the Commission or non-discriminatory web-posted listing if the FCC or Commission does not require filing of a tariff. Both Parties agree to make the appropriate billing adjustments if the other Party can provide sufficient information to determine whether or not said traffic is Local or ISP-Bound Traffic.

8.4 <u>Jurisdictional Reporting</u>

8.4.1 Percent Local Use. Each Party shall report to the other a Percent Local Usage (PLU) factor. The application of the PLU will determine the amount of local or ISP-Bound minutes to be billed to the other Party. Each Party shall update its PLU on the first of January, April, July and October of the year and shall send it to the other Party to be received no later than thirty (30) days after the first of each such month based on local and ISP-Bound usage for the past three (3) months ending the last day of December, March, June and September, respectively. Requirements associated with PLU calculation and reporting shall be in accordance with standard industry OBF MECAB Guidelines, as amended from time to time and AT&T's Jurisdictional Factors Reporting Guide as set forth in Exhibit F of this Attachment.

8.4.2 Percent Local Facility. Each Party shall report to the other a Percent Local Facility (PLF) factor. The application of the PLF will determine the portion of switched dedicated transport to be billed per the local jurisdiction rates. The PLF shall be applied to Multiplexing, Local Channel and Interoffice Channel Switched Dedicated Transport utilized in the provision of local interconnection trunks. Each Party shall update its PLF on the first of January, April, July and October of the year and shall send it to the other Party to be received no later than thirty (30) days after the first of each such month to be effective the first bill period the following month, respectively. Requirements associated with PLF calculation and reporting shall be as set forth in AT&T's Jurisdictional Factors Reporting Guide, attached hereto as Schedule F.

8.4.3 Percent Interstate Usage. Each Party shall report to the other the projected Percent Interstate Usage (PIU) factors. All jurisdictional report requirements, rules and regulations shall be in accordance with standard industry OBF MECAB Guidelines, as amended from time to time and AT&T's Jurisdictional Factors Reporting Guide as set forth in Exhibit F of this Attachment. Each Party shall update its PIUs on the first of January, April, July and October of the year and shall send it to the other Party to be received no later than thirty (30) days after the first of each such month, for all services showing the percentages of use for the past three (3) months ending the last day of December, March, June and September.

8.5 Notwithstanding the provisions in Section 8.4.1, 8.4.2, and 8.4.3 above, where the terminating Party has message recording technology that identifies the jurisdiction of traffic terminated as defined in this Agreement, such information shall, at the terminating Party's option, be utilized to determine the appropriate jurisdictional reporting factors (PLU, PIU, and/or PLF), in lieu of those provided by the originating Party. In the event that the terminating Party opts to utilize its own data to determine jurisdictional reporting factors, such terminating Party shall notify the originating Party at least fifteen (15) days prior to the beginning of the calendar quarter in which the terminating Party will begin to utilize its own data. Such factors shall be subject to the Dispute Resolution provisions in this Agreement, as well as the Audit provisions set forth in 8.3.5 below.

8.6 Audits. On thirty (30) days written notice, each Party must provide the other the ability and opportunity to conduct an annual audit to ensure the proper billing of traffic. AT&T and TWTC shall retain records of call detail for a minimum of nine months from which the PLU, PLF and/or PIU can be ascertained. The audit shall be conducted during normal business hours at an office designated by the Party being audited. Audit requests shall not be submitted more frequently than one (1) time per calendar year. Audits shall be performed by a mutually acceptable independent auditor paid for by the Party requesting the audit. The PLF, PLU and/or PIU shall be adjusted based upon the audit results and shall apply for the quarter the audit was completed, for the quarter prior to the completion of the audit, and for the two (2) quarters following the completion of the audit. If, as a result of an audit, either Party is found to have overstated the PLF, PLU and/or PIU by twenty percentage points (20%) or more, that Party shall reimburse the auditing Party for the cost of the audit**.**

8.7 Compensation for 8XX Traffic. AT&T will charge the appropriate switched access charges as set forth in the AT&T intrastate Access Services Tariff to the IXC that is responsible for terminating the 8XX to the appropriate Wide Area Telecommunications Services (WATS) or Plain Old Telephone Service (POTS) number. TWTC will pay AT&T the database query charge as set forth in the AT&T Intrastate Access Services Tariff. TWTC will be responsible for any applicable Common Channel Signaling (SS7).

8.7.1 Records for 8XX Billing. Where technically feasible, each Party will provide to the other Party the appropriate records, in accordance with industry standards, necessary for billing intraLATA 8XX providers. The providing Party shall be entitled to bill the receiving Party a records provisioning charge of $0.025 for the provisioning of records necessary for billing intraLATA 8XX providers. The records provided will be in a standard EMI format. These messages will only be those created by the billing Parties end user.

8.7.2 8XX Access Screening. AT&T's provision of 8XX Toll Free Dialing (TFD) to TWTC requires interconnection from TWTC to AT&T's 8XX Signal Channel Point (SCP). Such interconnections shall be established pursuant to AT&T's Common Channel Signaling Interconnection Guidelines and Telcordia's CCS Network Interface Specification document, TR-TSV-000905. TWTC shall establish SS7 interconnection at the AT&T Local Signal Transfer Points serving the AT&T 8XX SCPs that TWTC desires to query. The terms and conditions for 8XX TFD are set out in AT&T's Intrastate Access Services Tariff.

8.8 Mutual Provision of Switched Access Service

Switched Access Traffic. Switched Access Traffic is described as telephone calls requiring local transmission or switching services for the purpose of the origination or termination of Telephone Toll Service. Switched Access Traffic includes, but is not limited to, the following types of traffic: Feature Group A, Feature Group B,

Feature Group C, Feature Group D, toll free access (e.g., 8XX), 900 access and their successors. Additionally, any Public Switched Telephone Network interexchange telecommunications traffic, regardless of transport protocol method, where the originating and terminating points, end-to-end points, are in different LATAs, shall be considered Switched Access Traffic. Any traffic that utilizes Switched Access services, even if originated and terminated within the same LATA, shall be billed out of the Switched Access Tariff as filed and effective with the Commission or non-discriminatory web-posted listing if the FCC or Commission does not require filing of a tariff. Irrespective of transport protocol method used, a call which originated in one LATA and terminates in another LATA (i.e., the end to end points of the call) or in which the Parties' Switched Access Services are used for the origination or termination of the call shall be considered Switched Access Traffic.

8.9 The Parties agree that phone-to-phone calls that, originate and terminate in time division multiplexing format (TDM) format - in different LATAs, and are transported using Internet protocol (VoIP Transmission or IP in the middle) between those points, do not constitute Local Traffic or ISP-Bound Traffic, but constitute Switched Access Traffic subject to applicable and effective intrastate or interstate switched access tariff charges.

8.9.1 If an AT&T End User chooses TWTC as their presubscribed interexchange carrier, or if an AT&T End User uses TWTC as an interexchange carrier on a 101XXXX basis, AT&T will charge TWTC the appropriate AT&T tariff charges for originating switched access services.

8.10 Where the originating Party delivers a call to the terminating Party over switched access facilities, the originating Party will pay the terminating Party terminating, switched access charges as set forth in the appropriate Party's tariff as filed and effective with the FCC or Commission, or reasonable and non-discriminatory web posted listing if the FCC or Commission does not require filing of a tariff.

8.10.1 When TWTC's end office switch provides an access service connection to or from an IXC by a direct trunk group to the IXC utilizing AT&T facilities, each Party will provide its own access services to the IXC and bill on a multi-bill, multi-tariff meet-point basis. Each Party will bill its own access services rates to the IXC with the exception of the interconnection charge. The interconnection charge will be billed by TWTC as the Party providing the end office function. Each party will use the Multiple Exchange Carrier Access Billing (MECAB) guidelines to establish meet point billing for all applicable traffic. The Parties shall utilize a thirty (30) day billing period.

8.10.1.1 When TWTC's end office subtends the AT&T Access Tandem switch for receipt or delivery of switched access traffic and provides an access service connection to or from an IXC via AT&T's Access Tandem switch, AT&T, as the tandem company agrees to provide to TWTC, as the End Office Company, as defined in

MECAB, at no charge, all the switched access detail usage data, recorded at the access tandem, within no more than sixty (60) days after the recording date. Each Party will notify the other when it is not feasible to meet these requirements. As business requirements change, data reporting requirements may be modified as necessary.

8.10.2 AT&T, as the tandem provider company, will retain for a minimum period of sixty (60) days, access message detail sufficient to recreate any data that is lost or damaged by the tandem provider company or any third party involved in processing or transporting data.

8.10.3 AT&T, as the tandem provider company, agrees to recreate the lost or damaged data within forty-eight (48) hours of notification by the other or by an authorized third party handling the data.

8.10.4 Any claims against AT&T, as the tandem provider company, for unbillable or uncollectible revenue should be filed with the tandem provider company within one hundred and twenty (120) days of the usage date.

8.10.5 AT&T, as the tandem provider company shall keep records of its billing activities relating to jointly-provided Intrastate and Interstate access services in sufficient detail to permit the Subsequent Billing Party to, by formal or informal review or audit, to verify the accuracy and reasonableness of the jointly-provided access billing data provided by the Initial Billing Party. Each Party agrees to cooperate in such formal or informal reviews or audits, which might occur subsequent to the execution of this Agreement and further agrees to jointly review the findings of such reviews or audits in order to resolve any differences concerning the findings.

8.11 The Parties hereby agree not to knowingly deliver their originated Switched Access Traffic to the other Party for termination except over the appropriate Ordered Switched Access trunks and facilities.

8.12 Transit Traffic. AT&T shall provide tandem switching and transport services for TWTC's Transit Traffic. Rates for local Transit Traffic and ISP-Bound Transit Traffic shall be the applicable composite rate (i.e., Local Intermediary Charge) as set forth in Exhibit A to this Attachment. Rates for Switched Access Transit Traffic shall be the applicable charges as set forth in AT&T Interstate or Intrastate Switched Access tariffs. Billing associated with all Transit Traffic shall be pursuant to MECAB guidelines. Traffic between TWTC and Wireless Type 1 third parties shall not be treated as Transit Traffic from a routing or billing perspective. Traffic between TWTC and Wireless Type 2A or a third party CLEC utilizing AT&T switching shall not be treated as Transit Traffic from a routing or billing perspective until AT&T and the Wireless carrier or a third party CLEC utilizing AT&T switching have the capability to properly meet-point-bill in accordance with MECAB guidelines. TWTC agrees that the transit rates in each of the ICAs in the nine (9) states in AT&T's southeast region have been voluntarily

agreed to between the Parties. TWTC agrees to the transit rates with full knowledge of the Merger Commitment regarding transit rates as set forth in Attachment F to Memorandum Opinion and Order, dated March 26, 2007, In the Matter of AT&T Inc. and BellSouth Corporation Application for Transfer of Control, WC Docket No. 06-74.

8.12.1 The delivery of traffic that transits the AT&T network and is transported to another carrier's network is excluded from any AT&T billing guarantees. AT&T agrees to deliver Transit Traffic to the terminating carrier; provided, however, that TWTC is solely responsible for negotiating and executing any appropriate contractual agreements with the terminating carrier for the exchange of Transit Traffic through the AT&T network. AT&T will not be liable for any compensation to the terminating carrier or to TWTC. In the event that the terminating third party carrier imposes on AT&T any charges or costs for the delivery of Transit Traffic, TWTC shall reimburse AT&T for such charges or costs. Additionally, the Parties agree that any billing to a third party or other Telecommunications carrier under this Section shall be pursuant to MECAB procedures.

9. Ordering Charges

9.1 The facilities purchased pursuant to this Attachment shall be ordered via the Access Service Request (ASR) process.

9.2 The rates, terms and conditions associated with submission and processing of ASRs are as set forth in AT&T's FCC No. 1 Tariff, Section 5.

10. Basic 911 and E911 Interconnection

10.1 Basic 911 and E911 provides a caller access to the applicable emergency service bureau by dialing 911.

10.2 Basic 911 Interconnection. AT&T will provide to TWTC a list consisting of each municipality that subscribes to Basic 911 service. The list will also provide, if known, the E911 conversion date for each municipality and, for network routing purposes, a ten-digit directory number representing the appropriate emergency answering position for each municipality subscribing to 911. TWTC will be required to arrange to accept 911 calls from its end users in municipalities that subscribe to Basic 911 service and translate the 911 call to the appropriate 10-digit directory number as stated on the list provided by AT&T. TWTC will be required to route that call to the appropriate Public Safety Answering Point (PSAP). When a municipality converts to E911 service, TWTC will be required to begin using E911 procedures.

10.3 E911 Interconnection. TWTC shall install a minimum of two (2) dedicated trunks originating from its Serving Wire Center and terminating to the appropriate E911

tandem. The Serving Wire Center must be in the same LATA as the E911 tandem. The dedicated trunks shall be, at a minimum, DS0 level trunks configured as part of a digital (1.544 Mb/s) interface (DS1 facility). The configuration shall use CAMA-type signaling with multifrequency (MF) pulsing or SS7/ISUP signaling either of which shall deliver ANI with the voice portion of the call. If SS7/ISUP connectivity is used, TWTC shall follow the procedures as set forth in Appendix A of the CLEC Users Guide to E911 for Facility Based Providers that is located on the AT&T Interconnection Web site. If the user interface is digital, MF pulses as well as other AC signals shall be encoded per the u-255 Law convention. TWTC will be required to provide AT&T daily updates to the E911 database. TWTC will be required to forward 911 calls to the appropriate E911 tandem along with ANI based upon the current E911 end office to tandem homing arrangement as provided by AT&T. If the E911 tandem trunks are not available, TWTC will be required to route the call to a designated 7-digit or 10-digit local number residing in the appropriate PSAP. This call will be transported over AT&T's interoffice network and will not carry the ANI of the calling party. TWTC shall be responsible for providing AT&T with complete and accurate data for submission to the 911/E911 database for the purpose of providing 911/E911 to its end users.

10.4 Trunks and facilities for 911 Interconnection may be ordered by TWTC from AT&T pursuant to the terms and conditions set forth in this Attachment at the rates set forth in Exhibit A hereto.

10.5 The detailed practices and procedures for 911/E911 interconnection are contained in the E911 Local Exchange Carrier Guide For Facility-Based Providers that is located on the AT&T Interconnection Services Web site.

11. SS7 Network Interconnection

11.1 SS7 Signaling. Both Parties will utilize LEC-to-LEC SS7 Signaling, where available, in conjunction with all traffic in order to enable interoperability of CLASS features and functions except for call return. SS7 signaling parameters will be provided, including but not limited to automatic number identification (ANI), originating line information (OLI) calling company category and charge number. Privacy indicators will be honored, and the Parties will exchange Transactional Capabilities Application Part (TCAP) messages to facilitate SS7-based features between the respective networks. Neither Party shall alter the SS7 parameters, or be a party to altering such parameters, or knowingly pass SS7 parameters that have been altered in order to circumvent appropriate interconnection charges. Nothing herein shall obligate or otherwise require AT&T to send SS7 messages or call-related database queries to TWTC's or any other third-party's call-related database, unless otherwise agreed to by the Parties under a separate agreement.

11.2 Signaling Call Information. AT&T and TWTC will send and receive ten (10) digits for Local Traffic. Additionally, AT&T and TWTC will exchange the proper

call information, i.e. originated call company number and destination call company number, CIC, and OZZ, including all proper translations for routing between networks and any information necessary for billing.

11.3 SS7 Network Interconnection is the interconnection of TWTC local signaling transfer point switches or TWTC local or tandem switching systems with AT&T signaling transfer point switches. This interconnection provides connectivity that enables the exchange of SS7 messages among AT&T switching systems and databases, TWTC local or tandem switching systems, and other third-party switching systems directly connected to the AT&T SS7 network.

11.3.1 The connectivity provided by SS7 Network Interconnection shall fully support the functions of AT&T switching systems and databases and TWTC or other third-party switching systems with A-link access to the AT&T SS7 network.

11.3.2 If traffic is routed based on dialed or translated digits between a TWTC local switching system and a AT&T or other third-party local switching system, either directly or via a AT&T tandem switching system, then it is a requirement that the AT&T SS7 network convey via SS7 Network Interconnection the TCAP messages that are necessary to provide Call Management services (Automatic Callback, Automatic Recall, and Screening List Editing) between the TWTC local signaling transfer point switches and AT&T or other third-party local switch.

11.3.3 SS7 Network Interconnection shall provide:

11.3.3.1 Signaling Data Link functions, as specified in ANSI T1.111.2;

11.3.3.2 Signaling Link functions, as specified in ANSI T1.111.3; and

11.3.3.3 Signaling Network Management functions, as specified in ANSI T1.111.4.

11.3.4 SS7 Network Interconnection shall provide all functions of the SCCP necessary for Class 0 (basic connectionless) service as specified in ANSI T1.112. This includes GTT and SCCP Management procedures as specified in ANSI T1.112.4. Where the destination signaling point is an AT&T switching system or DB, or is another third-party local or tandem switching system directly connected to the AT&T SS7 network, SS7 Network Interconnection shall include final GTT of messages to the destination and SCCP Subsystem Management of the destination. Where the destination signaling point is a TWTC local or tandem switching system, SS7 Network Interconnection shall include intermediate GTT of messages to a gateway pair of TWTC local STPs and shall not include SCCP Subsystem Management of the destination.

11.3.5 SS7 Network Interconnection shall provide all functions of the Integrated Services Digital Network User Part as specified in ANSI T1.113.

11.3.6 SS7 Network Interconnection shall provide all functions of the TCAP as specified in ANSI T1.114.

11.3.7 If Internetwork MRVT and SRVT become approved ANSI standards and available capabilities of AT&T STPs, SS7 Network Interconnection may provide these functions of the OMAP.

11.4 Interface Requirements. The following SS7 Network Interconnection interface options are available to connect TWTC or TWTC-designated local or tandem switching systems or signaling transfer point switches to the AT&T SS7 network:

11.4.1 A-link interface from TWTC local or tandem switching systems; and

11.4.2 B-link interface from TWTC STPs.

11.4.3 The Signaling Point of Interconnection for each link shall be located at a cross-connect element in the central office where the AT&T STP is located. There shall be a DS1 or higher rate transport interface at each of the Signaling Points of interconnection. Each signaling link shall appear as a DS0 channel within the DS1 or higher rate interface.

11.4.4 AT&T shall provide intraoffice diversity between the Signaling Points of Interconnection and the AT&T STP, so that no single failure of intraoffice facilities or equipment shall cause the failure of both B-links in a layer connecting to an AT&T STP.

11.4.5 The protocol interface requirements for SS7 Network Interconnection include the MTP, ISDNUP, SCCP, and TCAP. These protocol interfaces shall conform to the applicable industry standard technical references.

11.4.6 AT&T shall set message screening parameters to accept messages from TWTC local or tandem switching systems destined to any signaling point in the AT&T SS7 network with which the TWTC switching system has a valid signaling relationship.

Exhibit B

Basic Architecture

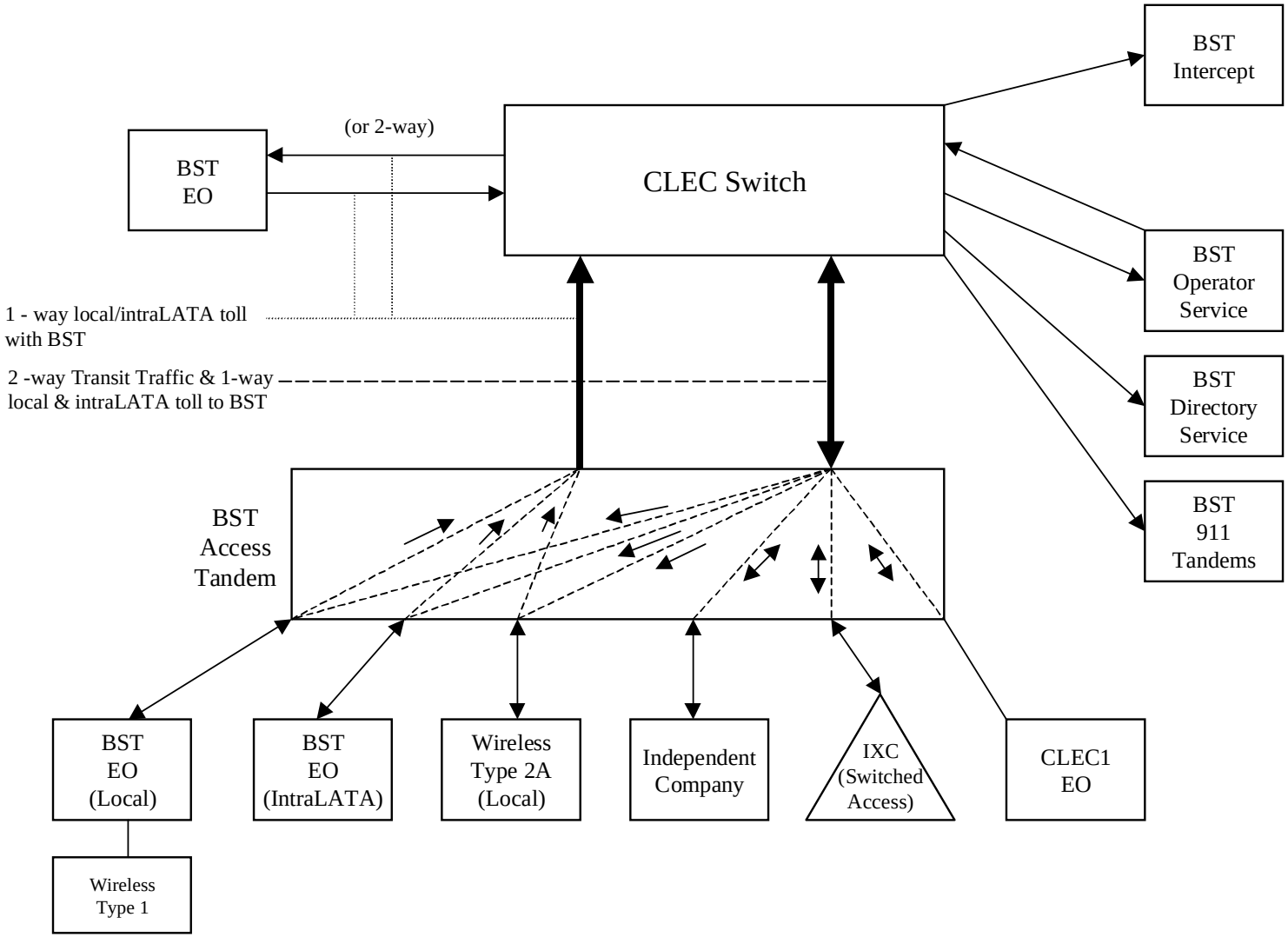

Exhibit C

One-Way Architecture

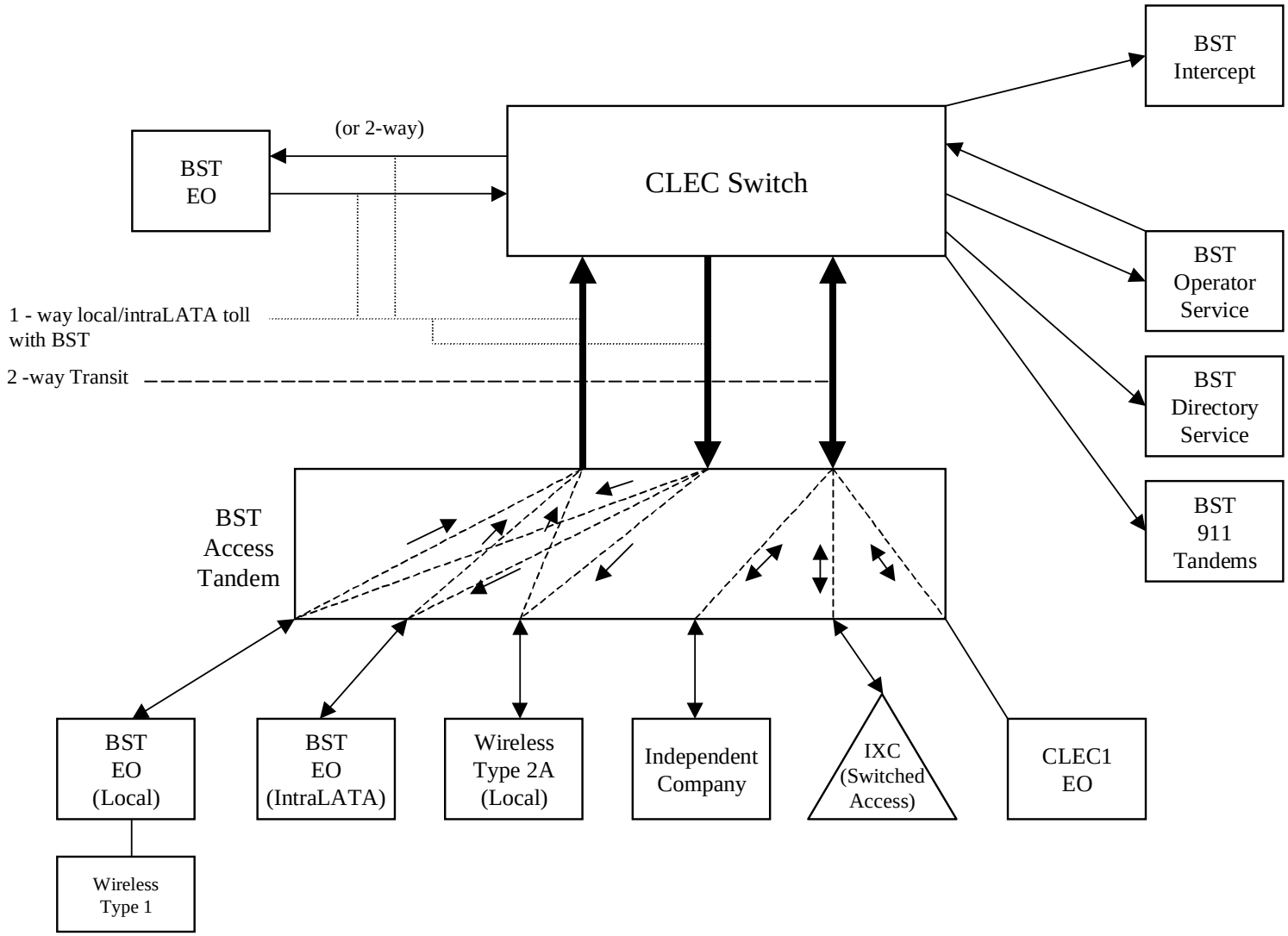

Exhibit D

Two-Way Architecture

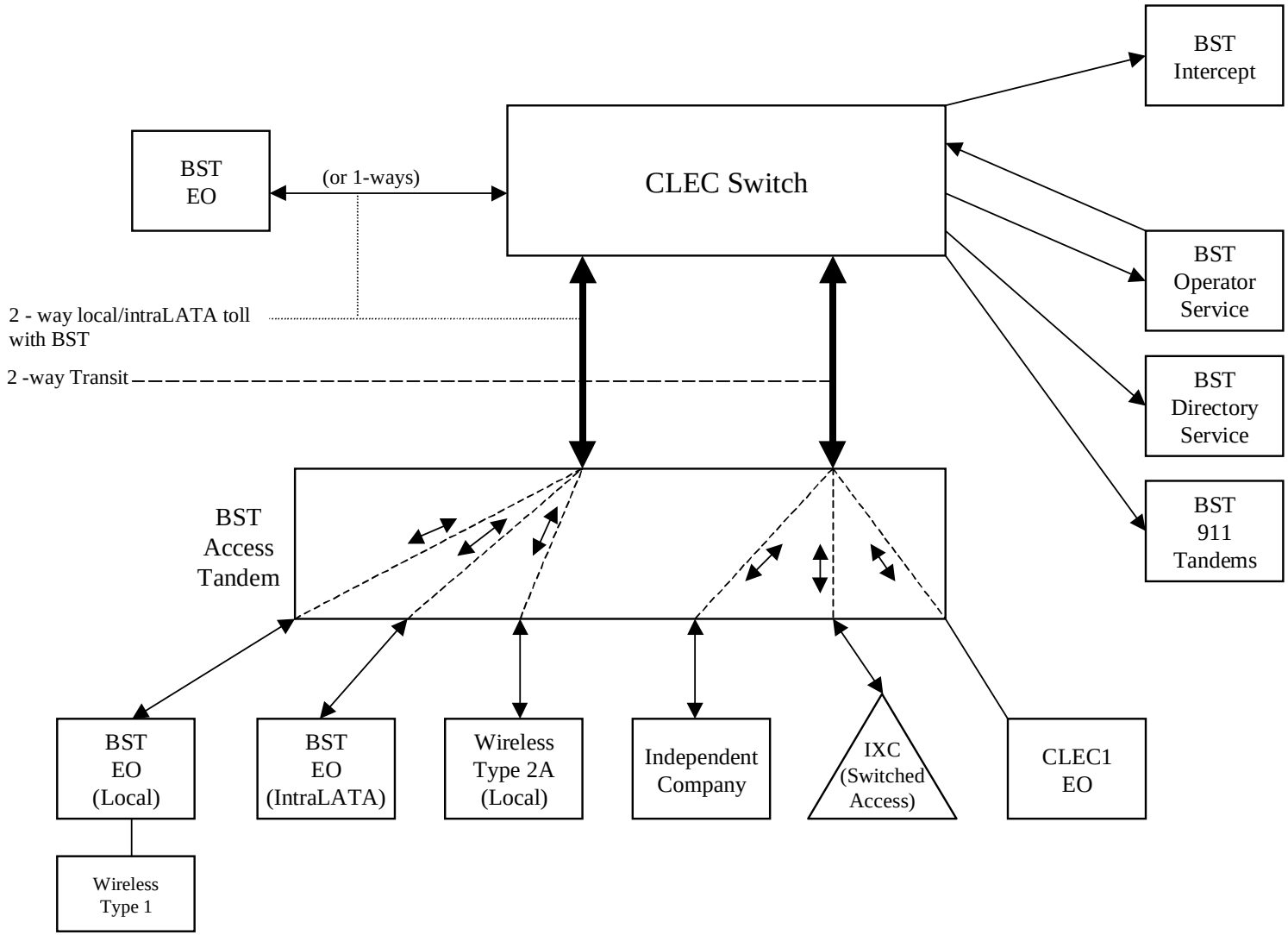

Exhibit E

Supergroup Architecture

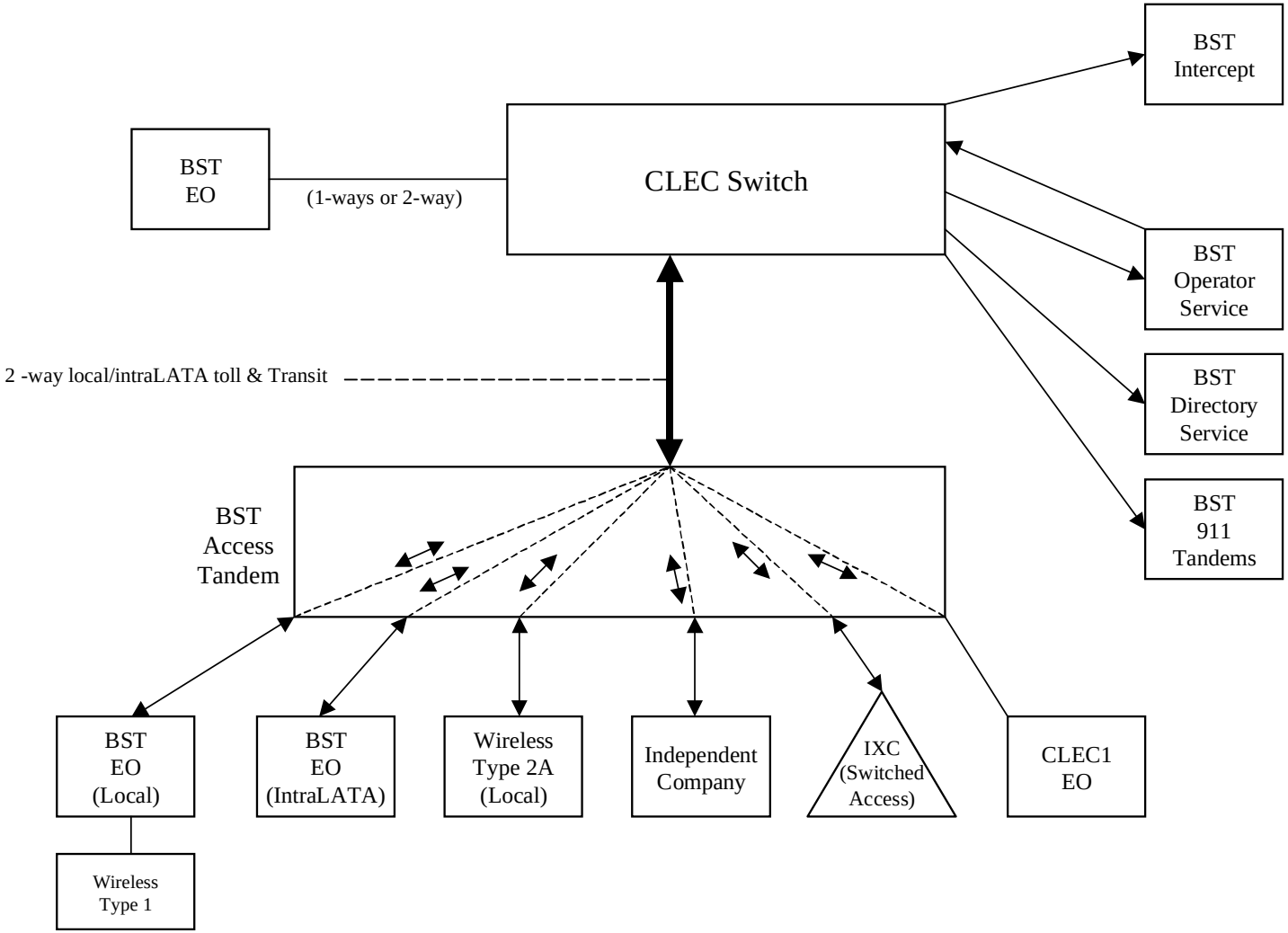

LOCAL INTERCONNECTION - South Carolina

Att: 3 Exh: A

CATEGORY	RATE ELEMENTS	Interim	Zone	BCS	USOC	RATES($) Rec	Nonrecurring First	Nonrecurring Add'l	Nonrecurring Disconnect First	Nonrecurring Disconnect Add'l	Svc Order Submitted Elec per LSR	Svc Order Submitted Manually per LSR	Incremental Charge - Manual Svc Order vs. Electronic- 1st	Incremental Charge - Manual Svc Order vs. Electronic- Add'l	Incremental Charge - Manual Svc Order vs. Electronic- Disc 1st	Incremental Charge - Manual Svc Order vs. Electronic- Disc Add'l
											OSS Rates($)					
							First	Add'l	First	Add'l	SOMEC	SOMAN	SOMAN	SOMAN	SOMAN	SOMAN
LOCAL INTERCONNECTION (CALL TRANSPORT AND TERMINATION)																
	NOTE: "bk" beside a rate indicates that the Parties have agreed to bill and keep for that element pursuant to the terms and conditions in Attachment 3.															
	ISP-BOUND TRAFFIC															
	ISP-bound, per MOU					0.0007										
	END OFFICE SWITCHING															
	End Office Switching Function, Per MOU					0.0012655										
	TANDEM SWITCHING															
	Tandem Switching Function Per MOU					0.000736										
	Multiple Tandem Switching, per MOU (applies to intial tandem only)					0.000736										
	Local Intermediary Charge, per MOU (effective date - 12/31/2007)					0.0020										
	Local Intermediary Charge, per MOU (1/1/2008 - expiration)					0.0025										
	*** This charge is applicable only to transit traffic and is applied in addition to applicable switching and/or interconnection charges.**															
	TRUNK CHARGE															
	Installation Trunk Side Service - per DS0			OHD	TPP6X		21.65bk	8.16bk								
	Installation Trunk Side Service - per DS0			OHD	TPP9X		21.65bk	8.16bk								
	Dedicated End Office Trunk Port Service-per DS0**			OHD	TDEOP	0.00										
	Dedicated End Office Trunk Port Service-per DS1**			OH1 OH1MS	TDE1P	0.00										
	Dedicated Tandem Trunk Port Service-per DS0**			OHD	TDWOP	0.00										
	Dedicated Tandem Trunk Port Service-per DS1**			OH1 OH1MS	TDW1P	0.00										
	**** This rate element is recovered on a per MOU basis and is included in the End Office Switching and Tandem Switching, per MOU rate elements**															
	COMMON TRANSPORT (Shared)															
	Common Transport - Per Mile, Per MOU					0.0000045										
	Common Transport - Facilities Termination Per MOU					0.0004095										
LOCAL INTERCONNECTION (DEDICATED TRANSPORT)																
	INTEROFFICE CHANNEL - DEDICATED TRANSPORT															
	Interoffice Channel - Dedicated Transport - 2-Wire Voice Grade - Per Mile per month			OHM	1L5NF	0.0167bk										
	Interoffice Channel - Dedicated Transport- 2- Wire Voice Grade - Facility Termination per month			OHM	1L5NF	24.30bk	40.63bk	27.47bk	16.77bk	6.91bk						
	Interoffice Channel - Dedicated Transport - 56 kbps - per mile per month			OHM	1L5NK	0.0167bk										
	Interoffice Channel - Dedicated Transport - 56 kbps - Facility Termination per month			OHM	1L5NK	16.76bk	40.63bk	27.47bk	16.77bk	6.91bk						
	Interoffice Channel - Dedicated Transport - 64 kbps - per mile per month			OHM	1L5NK	0.0167bk										
	Interoffice Channel - Dedicated Transport - 64 kbps - Facility Termination per month			OHM	1L5NK	16.76bk	40.63bk	27.47bk	16.77bk	6.91bk						
	Interoffice Channel - Dedicated Channel - DS1 - Per Mile per month			OH1, OH1MS	1L5NL	0.3415bk										
	Interoffice Channel - Dedicated Tranport - DS1 - Facility Termination per month			OH1, OH1MS	1L5NL	77.14bk	89.47bk	81.99bk	16.39bk	14.48bk						
	Interoffice Channel - Dedicated Transport - DS3 - Per Mile per month			OH3, OH3MS	1L5NM	8.02bk										
	Interoffice Channel - Dedicated Transport - DS3 - Facility Termination per month			OH3, OH3MS	1L5NM	880.65bk	279.37bk	163.12bk	60.33bk	58.59bk						
	LOCAL CHANNEL - DEDICATED TRANSPORT															
	Local Channel - Dedicated - 2-Wire Voice Grade per month			OHM	TEFV2	15.33bk	193.53bk	33.24bk	36.72bk	3.21bk						
	Local Channel - Dedicated - 4-Wire Voice Grade per month			OHM	TEFV4	16.54bk	193.97bk	33.68bk	37.19bk	3.68bk						
	Local Channel - Dedicated - DS1 per month			OH1	TEFHG	42.62bk	177.87bk	154.06bk	22.24bk	15.30bk						
	Local Channel - Dedicated - DS3 Facility Termination per month			OH3	TEFHJ	446.00bk	452.52bk	264.53bk	119.75bk	83.77bk						
	LOCAL INTERCONNECTION MID-SPAN MEET															
	Local Channel - Dedicated - DS1 per month			OH1MS	TEFHG	0.00	0.00									
	Local Channel - Dedicated - DS3 per month			OH3MS	TEFHJ	0.00	0.00									
	MULTIPLEXERS															
	Channelization - DS1 to DS0 Channel System			OH1, OH1MS	SATN1	107.57bk	91.24bk	62.71bk	10.56bk	9.81bk						
	DS3 to DS1 Channel System per month			OH3, OH3MS	SATNS	144.02bk	178.54bk	94.18bk	33.33bk	31.90bk						
	DS3 Interface Unit (DS1 COCI) per month			OH1, OH1MS	SATCO	8.64bk	6.59bk	4.73bk								
	Notes: If no rate is identified in the contract, the rates, terms, and conditions for the specific service or function will be as set forth in applicable AT&T tariff.															

BellSouth Jurisdictional Factors Reporting Guide

Issue 5.0

December 3, 2003

BELLSOUTH

Table of Contents

Revisions…… 3

1.0 Introduction…….…..… 4
2.0 Jurisdictions…….. 4
3.0 Factors……..……. 5
3.1 General……..……..……..…. 5
3.2 PIU - Percent Interstate Usage……..… 6
3.3 PLU - Percent Local Usage…….. 7
3.4 PLF - Percent Local Facility……. 7
4.0 Service Reporting Requirements…… 8
4.1 BellSouth Switched Access (SWA) Feature Group A (FGA) PIU (PIUA)… 8
4.2 BellSouth SWA FGB PIU (PIUB)……. 9
4.3 BellSouth SWA FGD & Local Terminating PIU (TPIU)…… 9
4.4 BellSouth Local Interconnection PLU……..…...…… 9
4.5 BellSouth SWA 500 PIU (ZP15)…… 10
4.6 BellSouth SWA 700 Access Service (ZP17)…….……... 10
4.7 BellSouth SWA 8XX Toll Free Dialing Ten Digit Screening (ZP18)…… 10
4.8 BellSouth SWA 900 Service (ZP19)……..… 10
4.9 BellSouth SWA Transport PIUE……..……. 10
4.10 BellSouth Local Interconnection Transport PLF……...… 11
4.11 BellSouth CCS7 Access Arrangements SPIU/SPLU…… 11
4.12 BellSouth Line Information Data Base Service LIDB….……..…… 12
5.0 Report Process…….…. 12
6.0 Frequency of Reporting…….…… 13
7.0 Audits…… 14
7.1 Audit Request…….. 14
7.2 Audit Compliance…… 14
8.0 Ordering…… 15

Revisions

Issue 1.0

The initial version of the *BellSouth Jurisdictional Factors Reporting Guide* was issued on August 15, 2001.

Issue 2.0

Incorporated references to *RF-3995 Jurisdictional Factor Report Form* – issued on December 21, 2001.

Issue 3.0

Added minor clarification concerning value to be used if PLF or PLU factors are not reported – issued on August 2, 2002.

Issue 4.0

Added Clarification concerning reporting of SPIU Factor and added language describing SPLU Factor and calculation of intrastate of non-local traffic – issued on October 17, 2002.

Issue 5.0

Revised the e-mail address that is utilized to report jurisdictional factors by electronic mail – issued on December 3, 2003.

BellSouth Jurisdictional Factors Reporting Guide

1.0 Introduction

Jurisdictional factors are utilized to apportion the billing of BellSouth Access and Local Interconnections Services between the interstate, intrastate and local jurisdictions. The rates, terms and conditions applicable to the provision of services are determined based upon the jurisdictional use of the service. Where sufficient data is available BellSouth will determine the percentage of use by jurisdiction for billing applications in accordance with BellSouth tariffs and contractual agreements. Absent sufficient data it is incumbent upon BellSouth customers to accurately report jurisdictional factors in order for BellSouth to bill the associated services per contractual and regulatory requirements. This document serves as a supplemental guide to the BellSouth tariffs and contracts for the preparation and reporting of the following jurisdictional factors related to Access and Local Interconnection Services

PIU - Percent Interstate Usage
PLU - Percent Local Usage
PLF - Percent Local Facility

These factors are reported by service at a state level as required. Unique service requirements are identified later in this Guide. In general, the PIU factors are required for Access Services and Local Interconnection Services to apportion the billing between the state and interstate jurisdictions. Competitive Local Exchange Carriers (CLECs) are also required to report PLU and PLF factors in addition to PIU factors to further apportion their intrastate use of Local Interconnection services between the state and local jurisdiction. Failure to report values for PLU and/or PLF shall result in the default value of zero percent being applied for these factors. The local jurisdiction is considered a subset of the intrastate jurisdiction in the determination and application of the PLU and PLF factors. The following sections provide information concerning the determination of factors, the application of factors, reporting procedures and customer records requirements. This information is provided as an aide in reporting jurisdictional factors and shall be used as a supplement to BellSouth Tariffs and/or contractual agreements with BellSouth.

2.0 Jurisdictions

There are three basic jurisdictions related to BellSouth Access and Local Interconnections Services. These are the Interstate, Intrastate and the Local jurisdiction. The jurisdiction is determined based upon the physical locations of the

origination and termination points of the communication. An ordinary voice communications telephone call that originates from a location that is in the same state

as the terminating number or called party shall be designated as an intrastate call and the minutes of use for that call shall be billed per the intrastate jurisdictional requirements. Conversely, a call that originates in a different state than the terminating location or called number shall be designated as interstate traffic. A call that originates and terminates within a local calling area as specified in the applicable contract or tariff is designated as local traffic.

The Jurisdiction of a call is determined solely by the location of the party initiating the call and the location of the called party. The origination and termination points are not necessarily determined based upon the carrier's network entry and exit points but rather on the origination and termination locations of the end users or the entities that are involved in the communications or information exchange. When multiple networks or carriers are involved, a particular carrier's transport of the service may be totally within a state boundary, however, the ultimate end points of the call or information exchange may be in different states. In this situation, the traffic shall be designated as interstate for all carriers even though a particular carrier's transport service begins and ends within a state boundary. In other words, jurisdiction of a call is determined solely by the locations of the originating and terminating parties and is not affected by the manner in which the call is routed through the telecommunications network.

The location of the origination or termination end points is determined based upon the location of the serving central offices. If a call terminates to an office that is associated with a LATA in an adjoining state (cross boundary) the call is considered to complete in the state where the central office is located.

3.0 Factors

3.1. General

BellSouth Jurisdictional factors are jurisdictional projections of the percentages of use of access and interconnection services for billing purposes. Factors shall be provided with the first request for each service in each state and are updated quarterly based upon the most recent three months of data. Factors for the initial request shall be reported via *RF-3995 Juridictional Factor Report* that is located at http://www.interconnection.bellsouth.com/forms/index.html, CLEC Forms Online or Interexchange Carrier Webforms. If factors are not updated then BellSouth will

assume that the percentages are the same as previously provided. If a valid quarterly report has never been received then BellSouth may utilize the factor(s) provided with the initial order for service, the most recent audit results if an audit has been performed or the default value for the particular factor. In cases where sufficient data is available then BellSouth will determine the factors to be utilized for billing.

3.2. PIU - Percent Interstate Usage

This factor is the percentage of use that is interstate. For services that are billed on a per minute of use (MOU) basis the PIU is based upon the traffic to and from the BellSouth Network. Further, depending upon the type of usage based service, the PIU may represent the percentage of both originating and terminating usage or may only represent the percentage of terminating usage that is jurisdictionally interstate. Any traffic that originates/terminates in the reporting carrier's network that ultimately originates/terminates to the BellSouth Network through another carrier's network shall be included in the reported PIU factor(s) by the intermediate carrier that accepts billing for the usage. This relationship is usually established per an agency authorization. In these situations, the carrier that accepts billing from BellSouth for the usage to and from BellSouth shall include such usage in their factor calculations that are reported to BellSouth. Any usage that transits a reporting carrier's network shall be included in the jurisdictional factor reporting by the billed carrier to the originating/terminating carrier regardless of the number of carriers involved in the transport of the traffic. It is incumbent upon the carrier that is billed for originating/terminating traffic to the BellSouth Network to report PIU factors to BellSouth that are representative of the actual jurisdiction of traffic delivered to BellSouth.

For services that are not billed on a usage sensitive basis (e.g. Switched Transport Local Channel, Interoffice Channels & Multiplexing Equipment) the total use of the service shall be considered in determining the PIU factors including originating and terminating usage to the BellSouth Network.

The PIU factor is calculated as follows where MOUs are billed minutes of use:

$$\frac{\textit{Total Interstate MOUs}}{\textit{Total Usage MOUs}}$$

Total Usage includes interstate, intrastate and local usage. This percentage is calculated on a statewide basis. Both Interexchange Carriers and Facility Based Competitive Local Exchange Carriers (CLECs) are required to report PIU factors per their Access Carrier Name Abbreviation (ACNA).

3.3. PLU – Percent Local Usage

This factor is the percentage of intrastate terminating usage that is categorized as Local Jurisdiction. For purposes of this guide the total intrastate usage includes intrastate local usage and intrastate non-local usage. The local jurisdiction is applicable to Competitive Local Exchange Carriers (CLECs) that are terminating local traffic from their network to the BellSouth network. CLECs that totally utilize resale or unbundled network elements to provision local services are not required to report PLU factors. Interexchange Carriers that do not terminate local traffic as a CLEC are not required to report PLU factors. Terminating party pays usage shall be excluded from the PLU calculations (same as TPIU, Section 4.3). The local jurisdiction is normally defined per Local Interconnection contractual agreements and is calculated as follows where MOUs are billed minutes of use:

$$\frac{\textit{Total Local Terminating MOUs}}{\textit{Total Intrastate Terminating MOUs}}$$

The total intrastate terminating minutes can be determined by multiplying the total terminating minutes by (1- TPIU). Therefore the PLU may also be calculated as follows:

$$\frac{\textit{Total Local Terminating MOUs}}{(\textit{Total Terminating MOUs}) \times (1\text{-}\textit{TPIU})}$$

This factor is calculated on a statewide basis by Access Carrier Name Abbreviation (ACNA).

3.4. PLF – Percent Local Facility

The PLF is the percentage of the intrastate use of Switched Dedicated Transport and/or Local Interconnection Transport that is jurisdictionally local. This factor is similar to PLU except that it applies to dedicated transport services that are billed on a non-usage sensitive basis. Reporting of this factor is required by Facility Based CLECs utilizing BellSouth Local Interconnection transport services. Factors for the initial request shall be reported via *RF-3995 Jurisdictional Factor Report* **(**see http://www.interconnection.bellsouth.com/forms/index.html, CLEC Forms Online or Interexchange Carrier Webforms). In addition, IXCs that also function as a CLEC and utilize Switched Dedicated Transport and/or Local

Interconnection transport to interconnect with the Bellsouth Network for the exchange of local traffic are required to report a PLF. As with PIU factors for non-usage sensitive billed services, the total use of these services are considered in determining the factor (i.e. all originating and terminating usage). The PLF represents the percentage of use of all the Switched Dedicated Transport and Local Interconnection Transport provisioned by BellSouth that is jurisdictionally local as defined per contract or tariff. The PLF for these services is based upon the usage that is transported by these services as follows:

$$\frac{\textit{Total Local MOUs}}{\textit{Total Intrastate MOUs}}$$

The total intrastate minutes can be determined by multiplying the total minutes by (1- PIUE) where PIUE is the factor applicable to Switched Dedicated Transports and Local Interconnection Transport. Therefore the PLF may also be calculated as follows:

$$\frac{\textit{Total Local Minutes}}{\textit{(Total Minutes) x (1-PIUE)}}$$

This factor may is calculated on a statewide basis and reported per Access Carrier Name Abbreviation (ACNA).

4.0 Service Reporting Requirements

Jurisdictional factors shall be developed and reported for particular services as specified in the BellSouth Tariffs and as specified in applicable contracts that are provisioned for a carrier. Factor reporting requirements for these services are discussed in the following subsections.

4.1. BellSouth Switched Access (SWA) Feature Group A (FGA) PIU (PIUA)

Usage based rate elements are billed for FGA in both the originating and terminating directions. This usage shall be apportioned to the intrastate and interstate jurisdictions. A single PIU factor shall be reported at the state level to apportion all the applicable usage (both originating, terminating and transit) between the state and interstate jurisdictions. All usage received from or delivered to the BellSouth network and through the BellSouth Network to

connecting local exchange carriers shall be considered in the determination of the PIU for FGA.

4.2. BellSouth SWA FGB PIU (PIUB)

Usage based rate elements are billed for FGB in both the originating and terminating directions. This usage shall be apportioned to the state and interstate jurisdictions. A single PIU factor shall be reported at the state level to apportions all the applicable usage (both originating and terminating) based elements between the intrastate and interstate jurisdictions.

4.3. BellSouth SWA FGD & Local Terminating PIU (TPIU)

Usage based rate elements are billed for FGD in both the originating and terminating directions. BellSouth is able to determine the jurisdiction of originating FGD traffic per the billing records generated with each call. Therefore a factor to apportion usage for originating FGD traffic is not required from the reporting carrier. Originating traffic consists of calls where the location of the calling number is served from a BellSouth end office that is connecting to a carrier for completion to the called number location. The terminating usage shall be apportioned to the state and interstate jurisdictions per a TPIU factor. A single TPIU factor for terminating FGD traffic shall be reported at the state level to apportion the applicable usage based elements between the intrastate and interstate jurisdictions. Terminating party pays usage (e.g. 800 terminating traffic) shall be excluded from the TPIU calculations.

Local traffic shall also be included when determining the TPIU. If the reporting carrier functions as an Interexchange and Local carrier then all of the terminating usage sent to BellSouth will be apportioned between the state and interstate jurisdictions per a single TPIU. This factor shall be reported at the state level per Access Carrier Name Abbreviation (ACNA). A TPIU shall be reported by CLECs even if it does not terminate any interstate traffic to the BellSouth network. In this situation, the CLEC should report a TPIU equal to zero (0.00) to indicate that all of its traffic is Intrastate and Local.

4.4. BellSouth Local Interconnection PLU

The percent of usage to be billed per the Local Interconnection contracts is determined by the PLU factor. This factor shall be developed in conjunction with the TPIU factor discussed in the previous subsection. After the TPIU is

determined then the percentage of the intrastate usage that is local shall be determined. By definition, the percentage of intrastate traffic of the total terminating traffic is equal to 1 – TPIU. The total terminating traffic to be considered is discussed in the TPIU subsection. The PLU represents the percentage of intrastate terminating usage that is jurisdictionally local. This factor is reported at the state level by ACNA.

4.5. BellSouth SWA 500 PIU (ZP15)

The SWA 500 PIU factor will be applied to the carrier's originating 500 service MOUS and to the calls to apportion the usage and calls between state and interstate jurisdiction. This factor represents the percentage of originating 500 minutes and calls that are interstate jurisdiction.

4.6. BellSouth SWA 700 Access Service (ZP17)

The SWA 700 PIU factor will be applied to the carrier's originating 700 service MOUS to apportion the usage between state and interstate jurisdiction. This factor represents the percentage of originating 700 minutes that are interstate jurisdiction.

4.7. BellSouth SWA 8XX Toll Free Dialing Ten Digit Screening (ZP18)

The SWA 8XX PIU factor will be applied to the carrier's originating 8XX service MOUS and queries to apportion the usage and queries between the intrastate and interstate jurisdiction. This factor represents the percentage of originating 8XX minutes and queries that are interstate jurisdiction.

4.8. BellSouth SWA 900 Service (ZP19)

The SWA 900 PIU factor will be applied to the carrier's originating 900 service MOUS to apportion the usage between the intrastate and interstate jurisdiction. This factor represents the percentage of originating 900 minutes that are interstate jurisdiction.

4.9. BellSouth SWA Transport PIUE

BellSouth SWA Transport PIUE is applicable to the following SWA Transport Services:

SWA Local Channel
SWA Dedicated Interoffice Channels
SWA Channelization Equipment
Local Interconnection Dedicated Transport
Dedicated End Office Trunk Port Service
Dedicated Tandem End Office Trunk Port Service
SWA Expanded Interconnection Cross-Connects

The PIUE may also be applied to other flat rated charges not specifically covered by other PIU categories.

The utilization of these transport services is considered in combination to determine the PIUE factors. The PIUE will be applied to the recurring billing elements for these services to apportion billing between the intrastate and interstate jurisdictions. The total jurisdictional use of these services shall be considered when determining PIUE factors including all originating and terminating usage. The PIUE represents the percentage that these services are utilized for interstate jurisdiction applications.

4.10. BellSouth Local Interconnection Transport PLF

This factor is utilized to apportion the use of SWA Local Channel, SWA Dedicated Interoffice Channels, SWA Channelization Equipment, Local Interconnection Dedicated Transport, Tandem/End Office Ports and various other flat rated services to the Local Jurisdiction for billing purposes (per tariff and contractual agreements). This factor is developed in conjunction with the PIUE. The PLF represents the percentage of the Intrastate use of these services that is jurisdictionally Local whereby the Intrastate percentage is defined as 1-PIUE. The total jurisdictional use of these services shall be considered when determining PLF and should include originating and terminating traffic. This factor is reported at the state level by ACNA.

4.11.a. BellSouth CCS7 Access Arrangement SPIU

If a carrier has access to CCS7 Signaling Services monitoring software, then that carrier may use this software to identify the appropriate jurisdictional factors (SPIU/SPLU) on its signaling with BellSouth and report these factors in the same format detailed herein.

If, however, a carrier does not have access to CCS7 Signaling Services monitoring software, then as APIU for CCS7 Signaling Services shall be developed and reported based upon the associated billed minutes of use for SWA

Usage- based services. The billed minutes that are jurisdictionally ***interstate*** as a percentage of the total billed minutes shall be reported as the CCS7 Access SPIU.

4.11.a. BellSouth CCS7 Access Arrangement SPLU

If a carrier has access to CCS7 Signaling Services monitoring software, then that carrier may use this software to identify the appropriate jurisdictional factors (SPIU/SPLU) on its signaling with BellSouth and report these factors in the same format detailed herein.

If, however, a carrier does not have access to CCS7 Signaling Services monitoring software, then an SPLU for CCS7 Signaling Services shall be developed and reported based upon the associated billed minutes of use for SWA Usage based services and Local Interconnection services. The billed minutes that are jurisdictionally ***local*** as a percentage of the total *intrastate* billed minutes shall be reported as the CCS7 Access SPLU. Where the customer is a "Third Party Provider" of CCS7 Access services then the SPLU will be developed based upon a weighted average of all of that provider's "Third Party Customer's" end user traffic.

4.11.c. BellSouth CCS7 Access Arrangement: Special Note

In determining a factor for intrastate, ***non-local traffic,*** consider the following example:

Based on evaluating SWA usage-based services and local interconnection services, a BellSouth carrier customer has determined that its signaling traffic merits an SPIU of 80 and an SPLU of 60. As such, the following will then be true:

80% of the carrier's signaling messages will be billed as ***interstate.***
Of the remaining **20%,** 60% of the 20% (.60 x .20 = .12), **12%** will be billed as ***local***.

And, the final **8%** will be billed as ***intrastate, non-local.***

5. BellSouth Line Information Data Base Service LIDB

There are two factors reported for LIDB service, a PIU factor and a PCLU (Percent CLEC LIDB Usage). These factors are utilized to apportion the queries

to the LIDB Data Base between the interstate, intrastate and local jurisdiction. First, the total number of queries in the study period is determined and then the PCLU shall be calculated. The PCLU represents the percentage of LIDB queries that are jurisdictionally Local as a percentage of the total number of queries. The basic formula for the PCLU calculation is as follows:

$$\frac{\textit{Number of Local Queries}}{\textit{Total Number of Queries}}$$

After the PCLU is determined, the LIDB PIU shall be determined. The LIDB PIU represents the percentage of queries that are jurisdictionally interstate of the total number of queries minus the number of queries that are jurisdictionally local. The formula for the LIDB PIU is as follows:

$$\frac{\textit{Number of Interstate Queries}}{\textit{(Total Number of Queries) – (Number of Local Queries)}}$$

5.0 Report Process

The following summarizes the major steps to develop and report jurisdictional factors:

- Install/modify systems to capture usage data with sufficient detail to accurately determine and aggregate the usage to the appropriate jurisdiction, by ACNA
- Create/Modify call detail records for traffic segregation to the appropriate service and jurisdiction
- Record and accumulate usage data
- Analyze usage data
- Calculate the factors
- Report the factors
- Maintain sufficient records of the data resources utilized to determine jurisdictional factors to comply with audit verification requirements as specified in the BellSouth Tariffs and applicable contractual agreements.

6.0 Frequency of Reporting

Jurisdictional factors shall be updated on a quarterly basis during the months of January, April, July and October. These updates shall be received no later than 30

days after the first day in each of these months. These factors shall represent the actual use for the three previous ending on the last day of December, March, June and September respectively. These updates shall be provided in writing by letter or electronic mail and sent to the following address:

US Mail

BellSouth Telecommunications, Inc
2300 Northlake Centre Drive
Suite 415
Tucker, GA 30084

OR

Electronic Mail

piu.reports@bellsouth.com

An e-mail will be returned indicating receipt of reports submitted by electronic mail. The recommended format for updates is via the online form *RF-3995 Jurisdictional Factor Report* (see http://www.interconnection.bellsouth.com/forms/index.html, CLEC Forms Online or Interexchange Carrier Webforms).

In those instances where BellSouth has sufficient information to calculate jurisdictional factors for itself, BellSouth will notify the carrier, by letter or email, of the factors that will be used in billing, as well as the effective date. Unless otherwise notified, BellSouth will continue to update the specific identified factor(s) for subsequent quarters per the above schedule and the carrier will be exempt from further responsibility to report those specific factors.

In the event the customer does not provide a projected jurisdictional factor(s) and BellSouth does not have sufficient information to develop the jurisdictional factor(s) then BellSouth may utilize the most recent audit results if an audit has been performed, the jurisdictional factor(s) provided with the initial order for service or a default value.

7.0 Audits

7.1. Audit Request

If BellSouth disputes a PIU factor provided by a carrier and BellSouth does not have sufficient information to calculate a PIU, BellSouth may initiate negotiations with the carrier in order to reconcile the factor differences and attempt to determine the correct PIU factor.

If negotiations are attempted and are not successful in producing an agreed PIU factor, BellSouth has the option per its access tariffs to initiate an independent, third party audit of the carrier's PIU factors and the process utilized in the development of PIU factors.

Upon 30 days written notice, BellSouth may initiate an audit to ensure proper billing of traffic. The audit will be performed by:

- An independent auditor under contract to BellSouth
- A mutually acceptable independent auditor paid for by BellSouth
- Or an independent auditor selected and paid for by the carrier

Call detail records from which the PIU can be ascertained shall be retained for a minimum of 6 months. The call detail records will be made available for inspection at an agreed upon location during normal business hours. If requested data is not provided within 30 days of the notice, the carrier shall be in violation of the Tariff. BellSouth will not submit more than one audit request per calendar year.

7.2. Audit Compliance

The factor shall be adjusted based upon the audit results. The audited factor shall be applied to the usage for the quarter the audit was completed, the quarter prior to the audit, and the two quarters following the completion of the audit. If the audited factor has a variance of 20% or more from the factor reported factor, the carrier shall reimburse BellSouth for the cost of the audit if the audit was paid for by BellSouth.

Two quarters after the quarter in which the audit was completed, the carrier may report a revised factor. If the revised factor denotes a deviation of 5% or more from the audited factor and the carrier is not able to justify this deviation to BellSouth's satisfaction, BellSouth has the option of requesting another audit.

The carrier may contest the audit within 30 days from the date the audit report has been furnished to the carrier.

8.0 Ordering

As stated in 3.1 preceding, BellSouth jurisdictional shall be provided with the initial request for each service in each state and quarterly thereafter. Factors for the initial request shall be reported via *RF-3995 Jurisdictional Factor Report* which is located at http://www.interconnection.bellsouth.com/forms/index.html, CLEC Forms Online or Interexchange Carrier Webforms. Failure to provide the appropriate factors with the initial request may result in delay of service. In the event that service is provided and the appropriate factors have not been received, a default factor may be used.

Attachment 4

Central Office Collocation

CENTRAL OFFICE COLLOCATION
TABLE OF CONTENTS

1. Scope of Attachment
- **1.1 AT&T Premises**
- **1.2. Right to Occupy**
- **1.3. Space Allocation**
- **1.4. Transfer of Collocation Space**
- **1.5. Space Reclamation**
- **1.6. Use of Space**
- **1.7. Rates and Charges**
- **1.8. Due Dates**
- **1.9. Compliance**

2. Space Availability Report
- **2.1. Optional Space Availability Report**

3. Collocation Options
- **3.1. Cageless Collocation**
- **3.2. Caged Collocation**
- **3.3. Shared Caged Collocation**
- **3.4. Adjacent Collocation**
- **3.5. Direct Connect**
- **3.6. Co-Carrier Cross Connect**

4. Occupancy
- **4.1. Space Ready Notification**
- **4.2. Acceptance Walk Through**
- **4.3. Early Space Acceptance**
- **4.4. Termination of Occupancy**

5. Use of Collocation Space
- **5.1. Equipment Type**
- **5.2. Terminations**
- **5.3. Security Interest in Equipment**
- **5.4. No Marketing**
- **5.5. Equipment Identification**
- **5.6. Entrance Facilities**
- **5.7. Dual Entrance Facilities**
- **5.8. Shared Use**
- **5.9. Demarcation Point**
- **5.10. Equipment and Facilities**
- **5.11. AT&T's Access to Collocation Space**

CENTRAL OFFICE COLLOCATION
TABLE OF CONTENTS (Cont'd.)

5.12. Customer's Access
5.13. Interference or Impairment
5.14. Personalty and Its Removal
5.15. Alterations
5.16. Janitorial Service

6. Ordering and Preparation of Collocation Space
6.1. Initial Application
6.2. Subsequent Application
6.3. Space Preferences
6.4. Space Availability Notification
6.5. Denial of Application
6.6. Petition for Waiver
6.7. Waiting List
6.8. Public Notification
6.9. Application Response
6.10. Application Modifications
6.11. Bona Fide Firm Order

7. Construction and Provisioning
7.1 Construction and Provisioning Intervals
7.2. Joint Planning
7.3. Permits
7.4. Circuit Facility Assignments
7.5. Use of AT&T Certified Supplier
7.6 Alarms and Monitoring
7.7. Virtual to Physical Relocation
7.8 Virtual to Physical Conversion (In Place)
7.9. Cancellation
7.10. Licenses
7.11. Environmental Compliance

8. Rates and Charges
8.1. Rates
8.2. Application Fees
8.3. Recurring Charges
8.4. Non-Recurring Charges
8.5. Space Preparation
8.6. Floor Space
8.7 Power

CENTRAL OFFICE COLLOCATION
TABLE OF CONTENTS (Cont'd.)

8.8 Cable Installation
8.9 Cable Records
8.10 Security Escort
8.11 Other
9. Insurance

10. Mechanics Lien

11. Inspections

12. Security and Safety Requirements

13. Destruction of Collocation Space

14. Eminent Domain

15. Nonexclusivity

EXHIBIT A ENVIRONMENTAL AND SAFETY PRINCIPLES
EXHIBIT B RATES

AT&T

CENTRAL OFFICE COLLOCATION

1. Scope of Attachment

1.1 AT&T Premises. The rates, terms, and conditions contained within this Attachment shall only apply when TWTC is physically collocated as a sole occupant or as a Host within a AT&T Premises pursuant to this Attachment. AT&T Premises, as defined in this Attachment, includes AT&T Central Offices and Serving Wire Centers (hereinafter "AT&T Premises"). This Attachment is applicable to AT&T Premises owned or leased by AT&T. If the AT&T Premises occupied by AT&T is leased by AT&T from a third party or otherwise controlled by a third party, special considerations and/or intervals may apply in addition to the terms and conditions contained in this Attachment.

1.2 Right to Occupy. AT&T shall offer to TWTC collocation on rates, terms, and conditions that are just, reasonable, non-discriminatory and consistent with the rules of the FCC. Subject to the rates, terms and conditions of this Attachment, where space is available and it is technically feasible, AT&T will allow TWTC to occupy a certain area designated by AT&T within a AT&T Premises, or on AT&T property upon which the AT&T Premises is located, of a size which is specified by TWTC and agreed to by AT&T (hereinafter "Collocation Space"). The necessary rates, terms and conditions for a premises as defined by the FCC, other than AT&T Premises, shall be negotiated upon reasonable request for collocation at such premises.

1.2.1 Neither AT&T nor any of AT&T's affiliates may reserve space for future use on more preferential terms than those set forth in this Attachment.

1.2.1.1 In all states other than Florida, the size specified by TWTC may contemplate a request for space sufficient to accommodate TWTC's growth within a twenty-four (24) month period.

1.2.1.2 In the state of Florida, the size specified by TWTC may contemplate a request for space sufficient to accommodate TWTC's growth within an eighteen (18) month period.

1.3 Space Allocation. AT&T shall assign TWTC Collocation Space that utilizes existing infrastructure (e.g., heating, ventilation, air conditioning (HVAC), lighting and available power), if such space is available for collocation. Otherwise, AT&T shall attempt to accommodate TWTC's requested space preferences, if any, including the provision of contiguous space for any subsequent request for collocation. In allocating Collocation Space, AT&T shall not materially increase TWTC's cost or materially delay TWTC's occupation and use of the Collocation Space, assign

Collocation Space that will impair the quality of service or otherwise limit the service TWTC wishes to offer, reduce unreasonably the total space available for physical collocation or preclude reasonable physical collocation within the AT&T Premises. Space shall not be available for collocation if it is: (a) physically occupied by non-obsolete equipment; (b) assigned to another collocated telecommunications carrier; (c) used to provide physical access to occupied space; (d) used to enable technicians to work on equipment located within occupied space; (e) properly reserved for future use, either by AT&T or another collocated telecommunications carrier; or (f) essential for the administration and proper functioning of the AT&T Premises. AT&T may segregate Collocation Space and require separate entrances for collocated telecommunications carriers to access their Collocation Space, pursuant to FCC Rules.

1.4 Transfer of Collocation Space. TWTC shall be allowed to transfer Collocation Space to another CLEC under the following conditions: (1) the central office is not at or near space exhaustion; (2) the transfer of space shall be contingent upon AT&T's approval, which will not be unreasonably withheld; (3) TWTC has no unpaid, undisputed collocation charges; and (4) the transfer of the Collocation Space is in conjunction with TWTC's sale of all, or substantially all, of the in-place collocation equipment to the same CLEC.

1.4.1 The responsibilities of TWTC shall include: (1) submitting a letter of authorization to AT&T for the transfer; (2) entering into a transfer agreement with AT&T and the acquiring CLEC; and (3) returning all Security Access Devices to AT&T. The responsibilities of the acquiring CLEC shall include: (1) submitting an application to AT&T for the transfer of the Collocation Space; (2) satisfying all requirements of its interconnection agreement with AT&T; (3) submitting a letter to AT&T for the assumption of services; and (4) entering into a transfer agreement with AT&T and TWTC.

1.4.2 In conjunction with a transfer of Collocation Space, any services associated with the Collocation Space shall be transferred pursuant to separately negotiated rates, terms and conditions.

1.5 Space Reclamation. In the event of space exhaust within a AT&T Premises, AT&T may include in its documentation for the Petition for Waiver filed with the Commission, any unutilized space in the AT&T Premises. TWTC will be responsible for the justification of unutilized space within its Collocation Space, if the Commission requires such justification.

1.5.1 AT&T may reclaim unused Collocation Space when a AT&T central office is at, or near, space exhaustion and TWTC cannot demonstrate that TWTC will utilize the Collocation Space within a reasonable time. In the event of space exhaust or near exhaust within a AT&T Premises, AT&T will provide written notice to TWTC requesting that TWTC release non-utilized Collocation Space to AT&T, when 100

percent of the Collocation Space in TWTC's collocation arrangement is not being utilized.

Within twenty (20) days of receipt of written notification from AT&T, TWTC shall either: (1) return the non-utilized Collocation Space to AT&T, in which case TWTC shall be relieved of all obligations for charges associated with that portion of the Collocation Space applicable from the date the Collocation Space is returned to AT&T; or (2) for all states, with the exception of Florida, provide AT&T with information demonstrating that the Collocation Space will be utilized within twenty-four (24) months from the date TWTC accepted the Collocation Space (Acceptance Date) from AT&T. For Florida, TWTC shall provide information to AT&T demonstrating that the Collocation Space will be utilized within eighteen (18) months from the Acceptance Date.

Disputes concerning AT&T's claim of central office space exhaust, or near exhaust, or TWTC's refusal to return requested Collocation Space should be resolved by AT&T and TWTC pursuant to the Dispute Resolution language contained in this Agreement.

1.6 Use of Space. TWTC shall use the Collocation Space for the purpose of installing, maintaining and operating TWTC's equipment (which may include testing and monitoring equipment) necessary for interconnection with AT&T's services/facilities or for accessing AT&T's unbundled network elements for the provision of telecommunications services, as specifically set forth in this Agreement. The Collocation Space assigned to TWTC may not be used for any purposes other than as specifically described herein or in any amendment hereto.

1.7 Rates and Charges. TWTC agrees to pay the rates and charges identified in Exhibit B attached hereto.

1.8 Due Dates. If any due date contained in this Attachment falls on a weekend or a national holiday, then the due date will be the next business day thereafter. For intervals of ten (10) days or less, national holidays will be excluded. For purposes of this Attachment, national holidays include the following: New Year's Day, Martin Luther King, Jr. Day, President's Day (Washington's Birthday), Memorial Day, Independence Day, Labor Day, Columbus Day, Veteran's Day, Thanksgiving Day, and Christmas Day.

1.9 Compliance. Subject to Section 24 of the General Terms and Conditions of this Agreement, the Parties agree to comply with all applicable federal, state, county, local and administrative laws, rules, ordinances, regulations and codes in the performance of their obligations hereunder.

2. Optional Space Availability Report

2.1 Upon request from TWTC and at TWTC's expense, AT&T will provide a written report (Space Availability Report) describing in detail the space that is currently available for collocation at a particular AT&T Premises. This report will include the amount of Collocation Space available at the AT&T Premises requested, the number of collocators present at the AT&T Premises, any modifications in the use of the space since the last report on the AT&T Premises requested and the measures AT&T is taking to make additional space available for collocation arrangements. A Space Availability Report does not reserve space at the AT&T Premises for which the Space Availability Report was requested by TWTC.

2.1.1 The request from TWTC for a Space Availability Report must be in writing and include the AT&T Premises street address, as identified in the Local Exchange Routing Guide (LERG), and the Common Language Location Identification (CLLI) code for the AT&T Premises requested. CLLI code information is located in the National Exchange Carrier Association (NECA) Tariff FCC No. 4.

2.1.2 AT&T will respond to a request for a Space Availability Report for a particular AT&T Premises within ten (10) days of the receipt of such request. AT&T will make commercially reasonable efforts to respond in ten (10) days to a Space Availability Report request when the request includes from two (2) to five (5) AT&T Premises within the same state. The response time for Space Availability Report requests of more than five (5) AT&T Premises, whether the request is for the same state or for two or more states within the AT&T Region, shall be negotiated between the Parties. If AT&T cannot meet the ten (10) day response time, AT&T shall notify TWTC and inform TWTC of the timeframe under which it can respond.

3. Collocation Options

3.1 Cageless Collocation. AT&T shall allow TWTC to collocate TWTC's equipment and facilities without requiring the construction of a cage or similar structure. AT&T shall allow TWTC to have direct access to TWTC's equipment and facilities in accordance with Section 5.12. AT&T shall make cageless collocation available in single bay increments. Except where TWTC's equipment requires special technical considerations (e.g., special cable racking or isolated ground plane), AT&T shall assign cageless Collocation Space in conventional equipment rack lineups where feasible. For equipment requiring special technical considerations, TWTC must provide the equipment layout, including spatial dimensions for such equipment pursuant to generic requirements contained in Telcordia GR-63-Core, and shall be responsible for compliance with all special technical requirements associated with such equipment.

3.2 Caged Collocation. AT&T will make caged Collocation Space available in fifty (50) square foot increments. At TWTC's option and expense, TWTC will arrange with a Supplier certified by AT&T (AT&T Certified Supplier) to construct a collocation arrangement enclosure in accordance with AT&T's specifications for a wire mesh enclosure prior to starting equipment installation. Where local building codes require enclosure specifications more stringent than AT&T's wire mesh enclosure specifications, TWTC and TWTC's AT&T Certified Supplier must comply with the more stringent local building code requirements. TWTC's AT&T Certified Supplier shall be responsible for filing and obtaining any and all necessary permits and/or licenses for such construction. AT&T or AT&T's designated agent or contractor shall provide, at TWTC's expense, documentation, which may include existing building architectural drawings, enclosure drawings, specifications, etc., necessary for TWTC's AT&T Certified Supplier to obtain all necessary permits and/or other licenses. TWTC's AT&T Certified Supplier shall bill TWTC directly for all work performed for TWTC. AT&T shall have no liability for, nor responsibility to pay, such charges imposed by TWTC's AT&T Certified Supplier. TWTC must provide the local AT&T Central Office Building Contact with two (2) Access Keys that will allow entry into the locked enclosure. Except in the case of an emergency, AT&T will not access TWTC's locked enclosure prior to notifying TWTC at least forty-eight (48) hours or two (2) business days, whichever is greater, before access to TWTC's Collocation Space is required. Upon request, AT&T shall construct the enclosure for TWTC.

3.2.1 In the event TWTC's AT&T Certified Supplier will construct the collocation arrangement enclosure, AT&T may elect to review TWTC's plans and specifications, prior to allowing the construction to start, to ensure compliance with AT&T's wire mesh enclosure specifications. AT&T will notify TWTC of its desire to conduct this review in AT&T's Application Response, as defined herein, to TWTC's Initial Application. If TWTC's Initial Application does not indicate its desire to construct its own enclosure and TWTC subsequently decides to construct its own enclosure prior to AT&T's Application Response, then TWTC will resubmit its Initial Application, indicating its desire to construct its own enclosure. If TWTC subsequently decides to construct its own enclosure after the bona fide firm order (hereinafter "BFFO") has been accepted by AT&T, TWTC will submit a Subsequent Application, as defined in Section 6.2 of this Attachment. If AT&T elects to review TWTC's plans and specifications, then AT&T will provide notification to TWTC within ten (10) days after the Initial Application BFFO date or, if a Subsequent Application is submitted as set forth in the preceding sentence, then the Subsequent Application BFFO date. AT&T shall complete its review within fifteen (15) days after AT&T's receipt of TWTC's plans and specifications. Regardless of whether or not AT&T elects to review TWTC's plans and specifications, AT&T reserves the right to inspect the enclosure after construction has been completed to ensure that it is constructed according to TWTC's submitted plans and specifications and/or AT&T's wire mesh enclosure specifications, as applicable. If AT&T decides to inspect the constructed Collocation Space, AT&T will complete its inspection within fifteen (15) days after

receipt of TWTC's written notification that the enclosure has been completed. Within seven (7) days after AT&T has completed its inspection of TWTC's caged Collocation Space AT&T shall require TWTC, at TWTC's expense, to remove or correct any structure that does not meet TWTC's plans and specifications or AT&T's wire mesh enclosure specifications, as applicable.

3.3 Shared Caged Collocation. TWTC may allow other telecommunications carriers to share TWTC's caged Collocation Space, pursuant to the terms and conditions agreed to by TWTC (Host) and the other telecommunications carriers (Guests) contained in this Section, except where the AT&T Premises is located within a leased space and AT&T is prohibited by said lease from offering such an option to TWTC. AT&T shall be notified in writing by TWTC upon the execution of any agreement between the Host and its Guest(s) prior to the submission of an application. Further, such notification shall include the name of the Guest(s), the term of the agreement, and a certification by TWTC that said agreement imposes upon the Guest(s) the same terms and conditions for Collocation Space as set forth in this Attachment between AT&T and TWTC. The term of the agreement between the Host and its Guest(s) shall not exceed the term of this Agreement between AT&T and TWTC.

3.3.1 TWTC, as the Host, shall be the sole interface and responsible Party to AT&T for the assessment and billing of rates and charges contained within this Attachment and for the purposes of ensuring that the safety and security requirements of this Attachment are fully complied with by the Guest(s), its employees and agents. AT&T shall provide TWTC with a pro-ration of the costs of the Collocation Space based on the number of collocators and the space used by each. There will be a minimum charge of one (1) bay/rack per Host/Guest. In addition to the above, for all states other than Florida, TWTC shall be the responsible Party to AT&T for the purpose of submitting applications for initial and additional equipment placement for the Guest(s). In Florida, the Guest(s) may submit its own Initial Application and Subsequent Applications for equipment placement using the Host's Access Carrier Name Abbreviation (ACNA). A separate Guest application shall result in the assessment of an Initial Application Fee or a Subsequent Application Fee, as set forth in Exhibit B, which will be billed to the Host on the date that AT&T provides its written Application Response to the Guest(s) Bona Fide application.

3.3.2 Notwithstanding the foregoing, the Guest(s) may submit service orders directly to AT&T to request the provisioning of interconnecting facilities between AT&T and the Guest(s), the provisioning of services, and/or access to Network Elements. The bill for these interconnecting facilities, services and Network Elements will be charged to the Guest(s) pursuant to the applicable AT&T Tariff or the Guest's Interconnection Agreement with AT&T.

3.3.3 TWTC shall indemnify and hold harmless AT&T from any and all claims, actions, causes of action, of whatever kind or nature arising out of the presence of TWTC's

Guest(s) in the Collocation Space, except to the extent caused by AT&T's sole negligence, gross negligence, or willful misconduct.

3.4 Adjacent Collocation. Subject to technical feasibility and space availability, AT&T will permit an adjacent collocation arrangement (Adjacent Arrangement) on AT&T Premises' property only when space within the requested AT&T Premises is legitimately exhausted and where the Adjacent Arrangement does not interfere with access to existing or planned structures or facilities on the AT&T Premises' property. An Adjacent Arrangement shall be constructed or procured by TWTC or TWTC's AT&T Certified Supplier and must be in conformance with the provisions of AT&T's design and construction specifications. Further, TWTC shall construct, procure, maintain and operate said Adjacent Arrangement pursuant to all of the applicable rates, terms and conditions set forth in this Attachment.

3.4.1 If TWTC requests Adjacent Collocation, pursuant to the conditions stated in 3.4 above, TWTC must arrange with a AT&T Certified Supplier to construct or procure the Adjacent Arrangement structure in accordance with AT&T's specifications. AT&T will provide the appropriate specifications upon request. Where local building codes require specifications more stringent than AT&T's own specifications, TWTC and TWTC's AT&T Certified Supplier shall comply with the more stringent local building code requirements. TWTC's AT&T Certified Supplier shall be responsible for filing and obtaining any and all necessary zoning, permits and/or licenses for such construction. TWTC's AT&T Certified Supplier shall bill TWTC directly for all work performed for TWTC to comply with this Attachment. AT&T shall have no liability for, nor responsibility to pay, such charges imposed by TWTC's AT&T Certified Supplier. TWTC must provide the local AT&T Central Office Building Contact with two (2) cards, keys or other access devices used to gain entry into the locked enclosure. Except in the case of an emergency, AT&T will not access TWTC's locked enclosure prior to notifying TWTC at least forty-eight (48) hours or two (2) business days, whichever is greater, before access to the Collocation Space is required.

3.4.2 TWTC must submit its Adjacent Arrangement construction plans and specifications to AT&T when it places its Firm Order. AT&T shall review TWTC's plans and specifications prior to the construction of an Adjacent Arrangement to ensure TWTC's compliance with AT&T's specifications. AT&T shall complete its review within fifteen (15) days after receipt of the plans and specifications from TWTC for the Adjacent Arrangement. AT&T may inspect the Adjacent Arrangement during and after construction is completed to ensure that it is constructed according to TWTC's submitted plans and specifications. If AT&T decides to inspect the completed Adjacent Arrangement, AT&T will complete its inspection within fifteen (15) days after receipt of TWTC's written notification that the Adjacent Arrangement has been completed. Within seven (7) days after AT&T has completed its inspection of TWTC's Adjacent Arrangement, AT&T shall require TWTC, at TWTC's expense, to

remove or correct any structure that does not meet its submitted plans and specifications or AT&T's specifications, as applicable.

3.4.3 TWTC shall provide a concrete pad, the structure housing the Adjacent Arrangement, HVAC, lighting, and all of the facilities that are required to connect the structure (i.e., racking, conduits, etc.) to the AT&T point of demarcation. At TWTC's option, and where the local authority having jurisdiction permits, AT&T shall provide an AC power source and access to physical Collocation services and facilities, subject to the same nondiscriminatory requirements as those applicable to any other physical Collocation arrangement. In Alabama and Louisiana, at TWTC's request and expense, AT&T will provide DC power to an Adjacent Collocation site where technically feasible, as that term has been defined by the FCC, and in accordance with applicable law. AT&T will provide DC power in an Adjacent Arrangement provided that such provisioning can be done in compliance with the National Electric Code (NEC), all safety and building codes, and any local codes, such as, but not limited to, local zoning codes, and upon completion of negotiations between the Parties on the applicable rates and provisioning intervals. TWTC will pay for any and all DC power construction and provisioning costs to an Adjacent Arrangement through individual case basis (ICB) pricing that must be paid as follows: fifty percent (50%) before the DC installation work begins and fifty percent (50%) at completion of the DC installation work to the Adjacent Arrangement. TWTC's AT&T Certified Supplier shall be responsible, at TWTC's sole expense, for filing the required documentation to obtain any and all necessary permits and/or licenses for an Adjacent Arrangement. AT&T shall allow Shared Caged Collocation within an Adjacent Arrangement, pursuant to the terms and conditions set forth in Section 3.3 above.

3.5 Direct Connect. AT&T will permit TWTC to directly interconnect between its own physical/virtual Collocation Spaces within the same AT&T central office (Direct Connect). TWTC shall contract with a AT&T Certified Supplier to place the Direct Connect, which shall be provisioned using facilities owned by TWTC. A Direct Connect shall utilize AT&T common cable support structure. There will be a recurring charge per linear foot, per cable, of the actual common cable support structure used by TWTC to provision the Direct Connect between its physical/virtual Collocation Spaces. In those instances where TWTC's physical/virtual Collocation Spaces are contiguous in the central office, TWTC will have the option of using TWTC's own technicians to deploy the Direct Connect using either electrical or optical facilities between its Collocation Spaces by constructing its own dedicated cable support structure. TWTC will deploy such electrical or optical connections directly between its own equipment without being routed through AT&T's equipment or common cable support structure. TWTC may not self-provision a Direct Connect on any AT&T distribution frame, POT (Point of Termination) Bay, DSX (Digital System Cross-Connect) panel or LGX (Light Guide Cross-Connect) panel. TWTC is solely responsible for ensuring the integrity of the signal.

3.5.1 To place an order for a Direct Connect, TWTC must submit an Initial Application or Subsequent Application to AT&T. If no modification to the Collocation Space is requested other than the placement of a Direct Connect, the Co-Carrier Cross Connect/Direct Connect Application Fee for Direct Connect, as defined in Exhibit B, will apply. If other modifications are requested, in addition to the placement of a Direct Connect, either an Initial Application Fee or a Subsequent Application Fee will apply, pursuant to Section 6.2 of this Attachment. AT&T will bill this nonrecurring charge on the date that AT&T provides an Application Response to TWTC.

3.6 Co-Carrier Cross Connect. A Co-Carrier Cross Connect (CCXC) is a cross connection between TWTC and another collocated telecommunications carrier, other than AT&T, in the same AT&T Premises. Where technically feasible, AT&T will permit TWTC to interconnect between its Collocation Space(s) and the physical/virtual collocation space(s) of another collocated telecommunications carrier(s) within the same AT&T Premises via a CCXC, pursuant to the FCC's Rules. The other collocated telecommunications carrier's agreement must also contain CCXC rates, terms and conditions before AT&T will permit the provisioning of a CCXC between the two collocated carriers. The applicable AT&T charges will be assessed to TWTC upon TWTC's request for the CCXC. TWTC is prohibited from using the Collocation Space for the sole or primary purpose of cross-connecting to other collocated telecommunications carriers.

3.6.1 TWTC must contract with a AT&T Certified Supplier to place the CCXC. The CCXC shall be provisioned using facilities owned by TWTC. Such cross-connections to other collocated telecommunications carriers may be made using either electrical or optical facilities. TWTC shall be responsible for providing a letter of authorization (LOA), with the application, to AT&T from the other collocated telecommunications carrier to which it will be cross-connecting. The CCXC shall utilize AT&T common cable support structure. There will be a recurring charge per linear foot, per cable, of the common cable support structure used by TWTC to provision the CCXC to the other collocated telecommunications carrier. In those instances where TWTC's equipment and the equipment of the other collocated telecommunications carrier are located in contiguous caged Collocation Space, TWTC may use its own technicians to install the CCXC using either electrical or optical facilities between the equipment of both collocated telecommunications carriers by constructing a dedicated cable support structure between the two contiguous cages. TWTC shall deploy such electrical or optical cross-connections directly between its own equipment and the equipment of the other collocated telecommunications carrier without being routed through AT&T's equipment or, in the case of a CCXC provisioned between contiguous collocation spaces, common cable support structure. TWTC shall not provision CCXC on any AT&T distribution frame, POT Bay, DSX panel or LGX panel. TWTC is solely responsible for ensuring the integrity of the signal.

3.6.2 To place an order for a CCXC, TWTC must submit an application to AT&T. If no modification to the Collocation Space is requested other than the placement of a CCXC, the Co-Carrier Cross Connect/Direct Connect Application Fee for a CCXC, as defined in Exhibit B, will apply. If other modifications are requested, in addition to the placement of a CCXC, either an Initial Application or a Subsequent Application Fee will apply, pursuant to Section 6.2 of this Attachment. AT&T will bill this nonrecurring charge on the date that it provides an Application Response to TWTC.

4. Occupancy

4.1 Space Ready Notification. AT&T will notify TWTC in writing when the Collocation Space is ready for occupancy (Space Ready Date).

4.2 Acceptance Walk Through. TWTC will schedule and complete an acceptance walkthrough of new or additional provisioned Collocation Space with AT&T within fifteen (15) days after the Space Ready Date. AT&T will correct any identified deviations from TWTC's original or jointly amended application within seven (7) days after the walkthrough, unless the Parties mutually agree upon a different time frame. AT&T will then establish a new Space Ready Date. Another acceptance walkthrough will be scheduled and conducted within fifteen (15) days after the new Space Ready Date. This follow-up acceptance walkthrough will be limited to only those deviations identified in the initial walkthrough. If TWTC completes its acceptance walkthrough within the fifteen (15) day interval associated with the applicable Space Ready Date, billing will begin upon the date of TWTC's acceptance of the Collocation Space (Space Acceptance Date). In the event TWTC fails to complete an acceptance walkthrough within the fifteen (15) day interval associated with the applicable Space Ready Date, the Collocation Space shall be deemed accepted by TWTC on the Space Ready Date and billing will commence from that date.

4.3 Early Space Acceptance. If TWTC decides to occupy the Collocation Space prior to the Space Ready Date, the date TWTC occupies the space is deemed the Space Acceptance Date and billing will begin from that date. TWTC must notify AT&T in writing that its collocation equipment installation is complete. TWTC's collocation equipment installation is complete, which is when TWTC's equipment has been cross-connected to AT&T's network for the purpose of provisioning telecommunication services to TWTC's customers. AT&T may, at its discretion, refuse to accept any orders for cross-connects until it has received such notice from TWTC.

4.4 Termination of Occupancy. In addition to any other provisions addressing termination of occupancy in this Agreement, TWTC may terminate its occupancy of a particular Collocation Space by submitting a Subsequent Application requesting termination of occupancy for such Collocation Space. Such termination shall be effective upon AT&T's acceptance of the Space Relinquishment Form. Billing for monthly recurring charges will cease on the date that TWTC and AT&T conduct an inspection of the terminated space and jointly sign off on the Space Relinquishment Form or on the date

that TWTC signs off on the Space Relinquishment Form and sends this form to AT&T, provided no discrepancies are found during AT&T's subsequent inspection of the terminated space. If the subsequent inspection by AT&T reveals any discrepancies, billing will cease on the date that AT&T and TWTC jointly conduct an inspection, confirming that TWTC has corrected all of the noted discrepancies identified by AT&T. A Subsequent Application Fee will not apply for the termination of occupancy; however, specific disconnect fees may apply to the services terminating to such Collocation Space. The particular disconnect fees that would apply in each state are contained in Exhibit B of this Attachment. AT&T may terminate TWTC's right to occupy Collocation Space in the event TWTC fails to comply with any provision of this Agreement, including payment of the applicable fees contained in Exhibit B of this Attachment, for such Collocation Space.

4.4.1 Upon termination of occupancy, TWTC, at its sole expense, shall remove its equipment and any other property owned, leased or controlled by TWTC from the Collocation Space. TWTC shall have thirty (30) days from the BFFO date ("Termination Date") to complete such removal, including the removal of all equipment and facilities of TWTC's Guest(s), unless TWTC's Guest(s) has assumed responsibility for the Collocation Space housing the Guest(s)'s equipment and executed the appropriate documentation required by AT&T to transfer the Collocation Space to the Guest(s) prior to TWTC's Termination Date.

4.4.2 TWTC shall continue the payment of all monthly recurring charges to AT&T until the date TWTC, and if applicable TWTC's Guest(s), has fully vacated the Collocation Space and the Space Relinquishment Form has been accepted by AT&T. If TWTC or TWTC's Guest(s) fails to vacate the Collocation Space within thirty (30) days from the Termination Date AT&T shall have the right to remove and dispose of the equipment and any other property of TWTC or TWTC's Guest(s), in any manner that AT&T deems fit, at TWTC's expense and with no liability whatsoever for TWTC's property or TWTC's Guest(s)'s property.

4.4.3 Upon termination of TWTC's right to occupy specific Collocation Space, the Collocation Space will revert back to AT&T's central office space inventory. TWTC shall surrender the Collocation Space to AT&T in the same condition as when it was first occupied by TWTC, with the exception of ordinary wear and tear, unless otherwise agreed to by the Parties. TWTC's AT&T Certified Supplier shall be responsible for updating and making any necessary changes to AT&T's records as required by AT&T specifications including, but not limited to, AT&T's Central Office Record Drawings and ERMA Records. TWTC shall be responsible for the cost of removing any TWTC constructed enclosure, as well as any supporting structures (e.g., racking, conduits, power cables, etc.), by the Termination Date and restoring the grounds to their original condition.

5. Use of Collocation Space

5.1 Equipment Type. AT&T shall permit the collocation and use of any equipment necessary for interconnection to AT&T's network and/or access to AT&T's unbundled network elements in the provision of telecommunications services, as the term "necessary" is defined by FCC 47 C.F.R. Section 51.323 (b). The primary purpose and function of any equipment collocated in a AT&T Premises must be for interconnection to AT&T's network or access to AT&T's unbundled network elements in the provision of telecommunications services. Equipment is necessary for interconnection if an inability to deploy that equipment would, as a practical, economical, or operational matter, preclude the requesting carrier from obtaining interconnection with AT&T at a level equal in quality to that which AT&T obtains within its own network or what AT&T provides to any affiliate, subsidiary, or other party.

5.1.2 Examples of equipment that would not be considered necessary include, but are not limited to: traditional circuit switching equipment, equipment used exclusively for call-related databases, computer servers used exclusively for providing information services, operations support system (OSS) equipment used to support collocated telecommunications carrier network operations, equipment that generates customer orders, manages trouble tickets or inventory, or stores customer records in centralized databases, etc. AT&T will determine upon receipt of an application if the requested equipment is necessary based on the criteria established by the FCC. Multifunctional equipment placed on a AT&T Premises must not place any greater relative burden on AT&T's property than comparable single-function equipment. AT&T reserves the right to allow the collocation of any equipment on a nondiscriminatory basis.

5.1.3 Such equipment must, at a minimum, meet the following Telcordia Network Equipment Building Systems (NEBS) General Equipment Requirements: Criteria Level 1 requirements as outlined in Telcordia Special Report SR-3580, Issue 1. Except where otherwise required by a Commission, AT&T shall comply with the applicable FCC rules relating to denial of collocation equipment based on TWTC's failure to comply with this Section.

5.2 Terminations. TWTC shall not request more DS0, DS1, DS3 and/or optical terminations for a collocation arrangement than the total port or termination capacity of the equipment physically installed in the Collocation Space. The total capacity of the equipment collocated in the Collocation Space will include equipment contained in an application, as well as any equipment already placed in the Collocation Space. If full network termination capacity of the equipment being installed is not requested in the application submitted by TWTC, additional network terminations for the installed equipment will require the submission of a Subsequent Application. In the event TWTC submits an application for terminations that will exceed the total capacity of

the collocated equipment, TWTC will be informed of the discrepancy by AT&T and required to submit a revision to the application.

5.3 Security Interest in Equipment. Commencing with the most current calendar quarter after the effective date of this Attachment, and thereafter with respect to each subsequent calendar quarter during the term of this Agreement, TWTC will, no later than thirty (30) days after the close of such calendar quarter, provide a report to ICS Collocation Product Management, Room 34A55, 675 W. Peachtree Street, Atlanta, Georgia 30375, listing any equipment in the Collocation Space (i) that was added during the calendar quarter to which such report pertains, and (ii) for which there is a UCC-1 lien holder or another entity that has a secured financial interest in such equipment (Secured Equipment). If no Secured Equipment has been installed within a given calendar quarter, no report shall be due hereunder in connection with such calendar quarter.

5.4 No Marketing. TWTC shall not use the Collocation Space for marketing purposes, nor shall it place any identifying signs or markings outside the Collocation Space or on the grounds of the AT&T Premises.

5.5 Equipment Identification. TWTC shall place a plaque or affix other identification (e.g., stenciling or labeling) to each piece of TWTC's equipment, including the appropriate emergency contacts with their corresponding telephone numbers, in order for AT&T to properly identify TWTC's equipment in the case of an emergency. For caged Collocation Space, such identification must be placed on a plaque affixed to the outside of the caged enclosure.

5.6 Entrance Facilities. TWTC may elect to place TWTC-owned or TWTC leased fiber entrance facilities into its Collocation Space. AT&T will designate the point of interconnection in close proximity to the AT&T Premises housing the Collocation Space, such as at an entrance manhole or a cable vault, which are physically accessible by both Parties. TWTC will provide and place fiber cable in the entrance manhole of sufficient length to be pulled through conduit and into the splice location. TWTC will provide and install a sufficient length of fire retardant riser cable, to which AT&T will splice the entrance cable. The fire retardant riser cable will extend from the splice location to TWTC's equipment in TWTC's Collocation Space. In the event TWTC utilizes a non-metallic, riser-type entrance facility, a splice will not be required. TWTC must contact AT&T for authorization and instruction prior to placing any entrance facility cable in an entrance manhole or cable vault. TWTC is responsible for the maintenance of the entrance facilities.

5.6.1 Microwave Transmission Facilities. At TWTC's request, AT&T will accommodate, where technically feasible and space is available, a microwave entrance facility, pursuant to separately negotiated rates, terms and conditions.

5.6.2 Copper and Coaxial Cable Entrance Facilities. In Florida, Georgia and Tennessee, AT&T shall permit TWTC to use copper or coaxial cable entrance facilities, if approved by the Commission, but only in those rare instances where TWTC demonstrates a necessity and entrance capacity is not at or near exhaust in a particular AT&T Premises in which TWTC's Collocation Space is located. Notwithstanding the foregoing, in the case of adjacent collocation, copper facilities may be used between the adjacent collocation arrangement and the central office demarcation point, unless AT&T determines that limited space is available for the placement of these entrance facilities.

5.7 Dual Entrance Facilities. AT&T will provide at least two interconnection points at each AT&T Premises where at least two such interconnection points are available and capacity exists. Upon receipt of a request by TWTC for dual entrance facilities to its physical Collocation Space, AT&T shall provide TWTC with information regarding AT&T's capacity to accommodate the requested dual entrance facilities. If conduit in the serving manhole(s) is available and is not reserved for another purpose or for utilization within twelve (12) months of the receipt of an application for collocation, AT&T will make the requested conduit space available for the installation of a second entrance facility to TWTC's Collocation Space. The location of the serving manhole(s) will be determined at the sole discretion of AT&T. Where dual entrance facilities are not available due to a lack of capacity, AT&T will provide this information to TWTC in the Application Response.

5.8 Shared Use. TWTC may utilize spare capacity on an existing telecommunications carrier's entrance facility for the purpose of obtaining an entrance facility to TWTC's Collocation Space within the same AT&T Premises.

5.8.1 AT&T shall allow the splice, as long as the fiber is non-working dark fiber. TWTC must arrange with AT&T in accordance with AT&T's Special Construction Procedures, RL93-11-030BT, and provide a LOA from the other telecommunications carrier authorizing AT&T to perform the splice of the TWTC-provided riser cable to the spare capacity on the other telecommunications carrier's entrance facility. If TWTC desires to allow another telecommunications carrier to use its entrance facilities, the telecommunications carrier must arrange with AT&T in accordance with AT&T's Special Construction Procedures, RL93-11-030BT, and provide a LOA from TWTC authorizing AT&T to perform the splice of the telecommunications carrier's provided riser cable to the spare capacity on TWTC's entrance facility.

5.9 Demarcation Point. AT&T will designate the point(s) of demarcation between TWTC's equipment and/or network facilities and AT&T's network facilities. Each Party will be responsible for the maintenance and operation of all equipment/facilities on its side of the demarcation point. TWTC shall be responsible for providing the necessary cabling and TWTC's AT&T Certified Supplier shall be responsible for installing and properly labeling/stenciling the common block and any necessary cabling

identified in Section 7 of this Attachment. TWTC or its agent must perform all required maintenance to the equipment/facilities on its side of the demarcation point, pursuant to Section 5.10, following, and may self-provision cross-connects that may be required within its own Collocation Space to activate service requests.

5.9.1 In Tennessee, AT&T will designate the point(s) of demarcation between TWTC's equipment and/or network facilities and AT&T's network facilities. Each Party will be responsible for the maintenance and operation of all equipment/facilities on its side of the demarcation point. For connections to AT&T's network, TWTC may request that the demarcation point be a Point of Termination (POT) bay in a common area within the AT&T Premises, which TWTC shall be responsible for providing and TWTC's AT&T Certified Supplier shall be responsible for installing and properly labeling/stenciling. TWTC's AT&T Certified Supplier shall also be responsible for installing the necessary cabling between TWTC's Collocation Space and the POT bay. TWTC, its agent, or TWTC's AT&T Certified Supplier must perform all required maintenance to the equipment/network facilities on its side of the demarcation point and may self-provision cross-connects that it requires within its own Collocation Space to activate service requests. If TWTC desires to avoid the use of a POT bay or any other intermediary device as contemplated by the Tennessee Regulatory Authority, AT&T shall negotiate alternative rates, terms and conditions for such requested demarcation point.

5.10 Equipment and Facilities. TWTC, or if required by this Attachment, TWTC's AT&T Certified Supplier, is solely responsible for the design, engineering, installation, testing, provisioning, performance, monitoring, and maintenance/repair of the equipment and network facilities used by TWTC, which must be performed in compliance with all applicable AT&T specifications. Such equipment and network facilities may include, but are not limited to, cable(s), equipment, and point of termination connections. TWTC and its designated AT&T Certified Supplier must follow and comply with all AT&T specifications outlined in the following AT&T Technical Requirements: TR 73503, TR 73519, TR 73572, and TR 73564.

5.11 AT&T's Access to Collocation Space. From time to time, AT&T may require access to TWTC's Collocation Space. AT&T retains the right to access TWTC's Collocation Space for the purpose of making AT&T equipment and building modifications (e.g., installing, altering or removing racking, ducts, electrical wiring, HVAC, and cabling). In such cases, AT&T will give notice to TWTC at least forty-eight (48) hours before access to TWTC's Collocation Space is required. TWTC may elect to be present whenever AT&T performs work in the TWTC's Collocation Space. The Parties agree that TWTC will not bear any of the expense associated with this type of work.

5.11.1 In the case of an emergency, AT&T will provide oral notice of entry as soon as possible and, upon request, will provide subsequent written notice.

5.11.2 TWTC must provide the local AT&T Central Office Building Contact with two (2) Access Devices that will allow AT&T entry into any enclosed and locked Collocation Space including, but not limited to, an Adjacent Arrangement, pursuant to the requirements contained in this Section.

5.12 TWTC's Access. Pursuant to Section 12, TWTC shall have access to its Collocation Space twenty-four (24) hours a day, seven (7) days a week. TWTC agrees to provide the name and social security number, date of birth, or driver's license number of each employee, supplier, or agent of TWTC or TWTC's Guest(s) with TWTC's written request for access keys or cards (Access Devices) for specific AT&T Premises, prior to the issuance of said Access Devices, using Form RF-2906-C, the "CLEC and CLEC Certified Supplier Access Request and Acknowledgement" form. The appropriate key acknowledgement forms (the "Collocation Acknowledgement Sheet" for access cards and the "Key Acknowledgement Form" for keys) must be signed by TWTC and returned to AT&T Access Management within fifteen (15) days of TWTC's receipt of these forms. Failure to return these properly acknowledged forms will result in the subsequent access key or card requests being held by AT&T until the proper acknowledgement documents have been received by AT&T and reflect current information. Access Devices may not be duplicated under any circumstances. TWTC agrees to be responsible for all Access Devices and for the return of all Access Devices in the possession of TWTC's employees, suppliers, agents, or Guests after termination of the employment relationship, the contractual obligation with TWTC ends, upon the termination of this Agreement, or upon the termination of occupancy of Collocation Space in a specific AT&T Premises. TWTC shall pay all applicable charges associated with lost or stolen Access Devices.

5.12.1 AT&T will permit one (1) accompanied site visit, which will be limited to no more than one hour, to TWTC's designated Collocation Space, after receipt of the BFFO, without charge to TWTC. TWTC must submit to AT&T the completed Access Control Request Form for all employees, suppliers, agents or Guests requiring access to a AT&T Premises at least thirty (30) days prior to the date TWTC desires to gain access to the Collocation Space. In order to permit reasonable access during construction of the Collocation Space, TWTC may submit a request for its one (1) free accompanied site visit to its designated Collocation Space at any time subsequent to AT&T's receipt of the BFFO. In the event TWTC desires access to its designated Collocation Space after the first accompanied free visit and TWTC's access request form(s) has not been approved by AT&T or TWTC has not yet submitted an access request form to AT&T, TWTC shall be permitted to access the Collocation Space accompanied by a AT&T security escort, at TWTC's expense, which will be assessed pursuant to the Security Escort fees contained in Exhibit B. TWTC must request that escorted access be provided by AT&T to TWTC's designated Collocation Space at least three (3) business days prior to the date such access is desired. A AT&T security escort will be required whenever TWTC or its approved agent or supplier requires access to the entrance manhole.

5.12.2 Lost or Stolen Access Devices. TWTC shall immediately notify AT&T in writing when any of its Access Devices have been lost or stolen. If it becomes necessary for AT&T to re-key buildings or deactivate an Access Device as a result of a lost or stolen Access Device(s) or for failure of TWTC's employees, suppliers, agents or Guest(s) to return an Access Device(s), TWTC shall pay for the costs of re-keying the building or deactivating the Access Device(s).

5.13 Interference or Impairment. Notwithstanding any other provisions of this Attachment, TWTC shall not use any product or service provided under this Agreement, any other service related thereto or used in combination therewith, or place or use any equipment or facilities in any manner that 1) significantly degrades, interferes with or impairs service provided by AT&T or any other entity or any person's use of its telecommunications services; 2) endangers or damages the equipment, facilities or any other property of AT&T or any other entity or person; 3) compromises the privacy of any communications routed through the AT&T Premises; or 4) creates an unreasonable risk of injury or death to any individual or to the public. If AT&T reasonably determines that any equipment or facilities of TWTC violates the provisions of this paragraph, AT&T shall provide written notice to TWTC, which shall direct TWTC to cure the violation within forty-eight (48) hours of TWTC's receipt of written notice or, if such cure is not feasible, at a minimum, to commence curative measures within twenty-four (24) hours and exercise reasonable diligence to complete such measures as soon as possible thereafter. After receipt of the notice, the Parties agree to consult immediately and, if necessary, to conduct an inspection of the Collocation Space.

5.13.1 Except in the case of the deployment of an advanced service which significantly degrades the performance of other advanced services or traditional voice band services, if TWTC fails to cure the violation within forty-eight (48) hours or, if such cure is not possible, to commence curative action within twenty-four (24) hours and exercise reasonable diligence to complete such action as soon as possible, or if the violation is of a character that poses an immediate and substantial threat of damage to property or injury or death to any person, or any other significant degradation, interference or impairment of AT&T's or another entity's service, then and only in that event, AT&T may take such action as it deems necessary to eliminate such threat including, without limitation, the interruption of electrical power to TWTC's equipment and/or facilities. AT&T will endeavor, but is not required, to provide notice to TWTC prior to the taking of such action and AT&T shall have no liability to TWTC for any damages arising from such action, except to the extent that such action by AT&T constitutes willful misconduct.

5.13.2 For purposes of this Section, the term "significantly degrades" shall be defined as an action that noticeably impairs a service from a user's perspective. In the case of the deployment of an advanced service which significantly degrades the performance of other advanced services or traditional voice band services and TWTC fails to cure the

violation within forty-eight (48) hours, or if such cure is not possible, to commence curative action within twenty-four (24) hours and exercise reasonable diligence to complete such action as soon as possible, AT&T will establish before the appropriate Commission that the technology deployed is causing the significant degradation. Any claims of network harm presented to TWTC or, if subsequently necessary, the Commission must be provided by AT&T with specific and verifiable information. When AT&T demonstrates that a certain technology deployed by TWTC is significantly degrading the performance of other advanced services or traditional voice band services, TWTC shall discontinue deployment of that technology and migrate its customers to other technologies that will not significantly degrade the performance of such services. Where the only degraded service itself is a known disturber, and the newly deployed technology satisfies at least one of the criteria for a presumption that it is acceptable for deployment, pursuant to 47 C.F.R. §51.230, the degraded service shall not prevail against the newly-deployed technology.

5.14 Personalty and Its Removal. Facilities and equipment placed by TWTC in the Collocation Space shall not become a part of the Collocation Space, even if nailed, screwed or otherwise fastened to the Collocation Space, but shall retain their status as personal property and may be removed by TWTC at any time. Any damage caused to the Collocation Space by TWTC's employees, suppliers, agents, or Guests during the installation or removal of such property shall be promptly repaired by TWTC at its sole expense. If TWTC decides to remove equipment and/or facilities from its Collocation Space and the removal requires no physical work be performed by AT&T and TWTC's physical work includes, but is not limited to, power reduction, cross-connects, or tie pairs, AT&T will bill TWTC the Administrative Only Application Fee associated with the type of removal activity performed by TWTC, as set forth in Exhibit B. This non-recurring fee will be billed on the date that AT&T provides an Application Response to TWTC.

5.15 Alterations. Under no condition shall TWTC or any person acting on behalf of TWTC make any rearrangement, modification, augment, improvement, addition, and/or other alteration which could affect in any way space, power, HVAC, and/or safety considerations to the Collocation Space or the AT&T Premises, hereinafter referred to individually or collectively as "Alterations", without the express written consent of AT&T, which shall not be unreasonably withheld. The cost of any such Alteration shall be paid by TWTC. An Alteration shall require the submission of a Subsequent Application and will result in the assessment of the applicable application fee associated with the type of alteration requested, as set forth in Sections 6.2.1, and 7.1.4, which will be billed by AT&T on the date that AT&T provides TWTC with an Application Response.

5.16 Janitorial Service. TWTC shall be responsible for the general upkeep of its Collocation Space. TWTC shall arrange directly with a AT&T Certified Supplier for

janitorial services applicable to caged Collocation Space. Upon request, AT&T shall provide a list of such suppliers on a AT&T Premises-specific basis.

6. **Ordering and Preparation of Collocation Space**

6.1 Initial Application. For TWTC's or TWTC's Guest's(s') initial equipment placement, TWTC shall input a physical Expanded Interconnection Application Document (Initial Application) for physical Collocation Space directly into AT&T's electronic application (e.App) system for processing. The Initial Application is considered Bona Fide when it is complete and accurate, meaning that all of the required fields on the Initial Application are completed with the appropriate type of information. An Initial Application Fee, as set forth in Exhibit B, will apply to each Initial Application submitted by TWTC and will be billed by AT&T on the date AT&T provides TWTC with an Application Response.

6.2 Subsequent Application. In the event TWTC or TWTC's Guest(s) desires to modify its use of the Collocation Space after a BFFO, TWTC shall complete an application that contains all of the detailed information associated with a requested Alteration of the Collocation Space, as defined in Section 5.15 of this Attachment (Subsequent Application). The Subsequent Application will be considered Bona Fide when it is complete and accurate, meaning that all of the required fields on the Subsequent Application have been completed with the appropriate type of information associated with the requested Alteration. AT&T shall determine what modifications, if any, to the AT&T Premises are required to accommodate the change(s) requested by TWTC in the Subsequent Application. Such modifications to the AT&T Premises may include, but are not limited to, floor loading changes, changes necessary to meet HVAC requirements, changes to power plant requirements, equipment additions, etc.

6.2.1 Subsequent Application Fees. The application fee paid by TWTC for an Alteration shall be dependent upon the level of assessment needed to complete the Alteration requested. Where the Subsequent Application does not require provisioning or construction work, but requires AT&T to perform an administrative activity, an Administrative Only Application Fee shall apply as set forth in Exhibit B. The Administrative Only Application Fee will apply to Subsequent Applications associated with a transfer of ownership of the Collocation Space, removal of equipment from the Collocation Space (where the removal requires no physical work to be performed by AT&T), an Alteration made to a Bona Fide application by TWTC prior to AT&T's receipt of the BFFO, and a virtual-to-physical conversion (in place). The Co-Carrier Cross Connect/Direct Connect Application Fee will apply when TWTC submits a Subsequent Application for a direct connection between its own physical and virtual Collocation Space(s) in the same AT&T Premises or between its physical or virtual Collocation Space and that of another collocated telecommunications carrier within the same AT&T Premises. The Power Reconfiguration Only Application Fee will apply when TWTC submits a Subsequent Application that reflects only an upgrade or reduction in the amount of power that AT&T is currently providing to TWTC's

physical Collocation Space. The fee for a Subsequent Application, for which the Alteration requested has limited effect (e.g., requires limited assessment and sufficient cable support structure, HVAC, power and terminations are available), shall be the Subsequent Application Fee, as set forth in Exhibit B. The appropriate nonrecurring application fee will be billed on the date that AT&T provides TWTC with an Application Response.

6.3 Space Preferences. If TWTC has previously requested and received a Space Availability Report for the AT&T Premises, TWTC may submit up to three (3) space preferences on its application by identifying the specific space identification numbers referenced on the Space Availability Report for the space it is requesting. In the event AT&T cannot accommodate TWTC's space preference(s), TWTC may accept the space allocated by AT&T or cancel its application and submit another application requesting additional space preferences for the same AT&T Premises. This application will be treated as a new application and the appropriate application fee will apply. The application fee will be billed by AT&T on the date that AT&T provides TWTC with an Application Response.

6.4 Space Availability Notification.

For all states except Florida and Tennessee, AT&T will respond to an application within ten (10) days as to whether space is available or not available within the requested AT&T Premises. In Florida and Tennessee, AT&T will respond to an application within fifteen (15) days as to whether space is available or not available within a AT&T Premises. AT&T's e.App system will reflect when TWTC's application is Bona Fide. If the application cannot be Bona Fide, AT&T will identify what revisions are necessary for the application to become Bona Fide.

6.4.1 If the amount of space requested is not available, AT&T will notify TWTC of the amount of space that is available and no application fee will apply. When AT&T's response includes an amount of space less than that requested by TWTC or space that is configured differently, no application fee will apply. If TWTC decides to accept the available space, TWTC must resubmit its application to reflect the actual space available, including the configuration of the space, prior to submitting a BFFO. When TWTC resubmits its application to accept the available space, AT&T will bill TWTC the appropriate application fee.

6.5 Denial of Application. If AT&T notifies TWTC that no space is available (Denial of Application), AT&T will not assess an application fee to TWTC. After notifying TWTC that AT&T has no available space in the requested AT&T Premises, AT&T will allow TWTC, upon request, to tour the entire AT&T Premises within ten (10) days of such Denial of Application. In order to schedule this tour, AT&T must receive the request for the tour of the AT&T Premises within five (5) days of the Denial of Application.

6.6 Petition for Waiver. Upon Denial of Application, AT&T will timely file a petition with the appropriate Commission pursuant to 47 U.S.C. § 251(c)(6). AT&T shall provide to the Commission any information requested by that Commission. Such information shall include which space, if any, AT&T or any of AT&T's affiliates have reserved for future use and a detailed description of the specific future uses for which the space has been reserved. Subject to an appropriate nondisclosure agreement or provision, AT&T shall permit TWTC to inspect any floor plans or diagrams that AT&T provides to the Commission.

6.7 Waiting List. On a first-come, first-served basis, which is governed by the date of receipt of an application or Letter of Intent, AT&T will maintain a waiting list of requesting telecommunications carriers that have either received a Denial of Application or, where it is publicly known that a AT&T Premises is out of space, have submitted a Letter of Intent to collocate in that AT&T Premises. AT&T will notify each telecommunications carrier on the waiting list that can be accommodated by the amount of space that becomes available, according to the position of the telecommunications carrier on said waiting list.

6.7.1 In Florida, on a first-come, first-served basis, which is governed by the date of receipt of an application or Letter of Intent, AT&T will maintain a waiting list of requesting telecommunications carriers that have either received a Denial of Application or, where it is publicly known that a AT&T Premises is out of space, have submitted a Letter of Intent to collocate in that AT&T Premises. Sixty (60) days prior to space becoming available, if known, AT&T will notify the Commission and the telecommunications carriers on the waiting list by mail when space will become available. If AT&T does not know sixty (60) days in advance of when space will become available, AT&T will notify the Commission and the telecommunications carriers on the waiting list within two (2) business days of the determination that space will become available. A telecommunications carrier that, upon denial of physical Collocation Space, requests virtual Collocation Space shall automatically be placed on the waiting list for physical Collocation Space that may become available in the future.

6.7.2 When physical Collocation Space becomes available, TWTC must submit an updated, complete, and accurate application to AT&T within thirty (30) days of notification by AT&T that physical Collocation Space will be available in the requested AT&T Premises previously out of space. If TWTC has originally requested caged Collocation Space and cageless Collocation Space becomes available, TWTC may refuse such space and notify AT&T in writing, within the thirty (30) day timeframe referenced above, that TWTC wishes to maintain its place on the waiting list for caged physical Collocation Space, without accepting the available cageless Collocation Space.

6.7.3 TWTC may accept an amount of space less than what it originally requested by submitting an application as set forth above, and, upon request, may maintain its position on the waiting list for the remaining space that was initially requested. If

TWTC does not submit an application or notify AT&T in writing within the thirty (30) day timeframe as described above in Section 6.7.2, AT&T will offer the available space to the next telecommunications carrier on the waiting list and remove TWTC from the waiting list. Upon request, AT&T will advise TWTC as to its position on the waiting list for a particular AT&T Premises.

6.8 Public Notification. AT&T will maintain on its Interconnection Services website, www.interconnection.bellsouth.com, a notification document that will indicate all AT&T Premises that are without available space. AT&T shall update such document within ten (10) days of the date that AT&T becomes aware that insufficient space is available to accommodate physical Collocation. AT&T will also post a document on its Interconnection Services website that contains a general notice when space becomes available in a AT&T Premises previously on the space exhaust list.

6.9 Application Response.

6.9.1 In Alabama, Georgia, Kentucky, Louisiana, Mississippi, North Carolina, and South Carolina, when space has been determined to be available for physical (caged or cageless) Collocation arrangements, AT&T will provide an Application Response within twenty (20) days of receipt of a Bona Fide application. The Application Response will be a written response that includes sufficient information to enable TWTC to place a Firm Order, which, at a minimum, will include the configuration of the space, the Cable Installation Fee, the Cable Records Fee, and any other applicable space preparation fees, as described in Section 8.

6.9.2 In Florida and Tennessee, within fifteen (15) days of receipt of a Bona Fide application, when space has been determined to be available or when a lesser amount of space than that requested is available, then with respect to the space available, AT&T will provide an Application Response including sufficient information to enable TWTC to place a Firm Order. The Application Response will include, at a minimum, the configuration of the space, the Cable Installation Fee, the Cable Records Fee, and any other applicable space preparation fees, as described in Section 8. When TWTC submits ten (10) or more applications within ten (10) days, the initial fifteen (15) day response interval will increase by ten (10) days for every additional ten (10) applications or fraction thereof.

6.10 Application Modifications. If a modification or revision is made to any information in the Bona Fide application prior to a BFFO, with the exception of modifications to (1) Customer Information, (2) Contact Information or (3) Billing Contact Information, whether at the request of TWTC or as necessitated by technical considerations, the application shall be considered a new application and handled as a new application with respect to the response and provisioning intervals. AT&T will charge TWTC the appropriate application fee associated with the level of assessment performed by AT&T, pursuant to Sections 6.1 and 6.2.

6.11 Bona Fide Firm Order.

6.11.1 TWTC shall indicate its intent to proceed with a Collocation Space request in a AT&T Premises by submitting a Bona Fide Firm Order (BFFO) to AT&T. The BFFO must be received by AT&T no later than thirty (30) days after AT&T's Application Response to TWTC's Bona Fide application or TWTC's application will expire.

6.11.2 AT&T will establish a Firm Order date based upon the date AT&T is in receipt of TWTC's BFFO. AT&T will acknowledge the receipt of TWTC's BFFO within seven (7) days of receipt, so that TWTC will have positive confirmation that its BFFO has been received. AT&T's response to a BFFO will include a Firm Order Confirmation, which contains the firm order date. No revisions may be made to a BFFO.

7. Construction and Provisioning

7.1 Construction and Provisioning Intervals.

7.1.1 In Florida and Tennessee, AT&T will complete construction of physical Collocation Space as soon as possible within a maximum of ninety (90) days from receipt of a BFFO or as agreed to by the Parties. For virtual Collocation Space, AT&T will complete construction as soon as possible within a maximum of sixty (60) days from receipt of a BFFO or as agreed to by the Parties. For Alterations requested to Collocation Space after the initial space has been completed, AT&T will complete construction for Collocation Space as soon as possible within a maximum of forty-five (45) days from receipt of a BFFO or as agreed to by the Parties, as long as no additional space has been requested by TWTC, If additional space has been requested by TWTC, AT&T will complete construction for the requested Collocation Space as soon as possible within a maximum of ninety (90) days from receipt of a BFFO for physical Collocation Space and forty five (45) days from receipt of a BFFO for virtual Collocation Space. If AT&T does not believe that construction will be completed within the relevant provisioning interval and AT&T and TWTC cannot agree upon a completion date, within forty-five (45) days of receipt of the BFFO for an initial request, or within thirty (30) days of receipt of the BFFO for an Alteration, AT&T may seek an extension from the Commission.

7.1.2 In Alabama, Georgia, Kentucky, Louisiana, Mississippi, North Carolina, and South Carolina, AT&T will complete construction for caged physical Collocation Space under ordinary conditions as soon as possible within a maximum of ninety (90) days from receipt of a BFFO or as agreed to by the Parties. AT&T will complete construction for cageless physical Collocation Space under ordinary conditions as soon as possible within a maximum of sixty (60) days from receipt of a BFFO and ninety (90) days from receipt of a BFFO for extraordinary conditions, or as agreed to by the Parties. Ordinary conditions are defined as space available with only minor changes required to AT&T's support systems. (Examples include, but are not limited to: minor modifications to HVAC, cabling and AT&T's power plant.) Extraordinary

conditions include, but may not be limited to: major AT&T equipment rearrangements or additions; power plant additions or upgrades; major mechanical additions or upgrades; major upgrades for ADA compliance; environmental hazards or hazardous materials abatement; and arrangements for which equipment shipping intervals are extraordinary in length. The Parties may mutually agree to renegotiate an alternative provisioning interval for the Collocation Space requested or AT&T may seek a waiver from the ordered interval, as set forth above, from the appropriate Commission, if AT&T does not believe that construction will be completed within the relevant provisioning interval.

7.1.3 Records Only Change. When TWTC adds equipment, that was originally included on TWTC's Initial Application or a Subsequent Application, and the addition of this equipment requires no additional space preparation work or cable terminations on the part of AT&T, then AT&T will impose no additional charges or intervals.

7.1.4 In the states of Alabama, Georgia, Kentucky, Louisiana, Mississippi, North Carolina, and South Carolina, AT&T will provide the reduced intervals outlined below to TWTC, when TWTC requests an Alteration specifically identified in Sections 7.1.4.1 through 7.1.4.9 as an "Augment. Except as otherwise set forth in Section 7.1.4.10 below, such Augment will require a Subsequent Application and will result in the assessment of the appropriate application fee associated with the type of Augment requested by TWTC. AT&T will assess the appropriate nonrecurring application fee set forth in Exhibit B on the date that it provides an Application Response to TWTC.

7.1.4.1 Simple Augments will be completed within twenty (20) days after receipt of the BFFO for an:

- Extension of Existing AC Circuit Capacity within Arrangement where Sufficient Circuit Capacity is Available
- Fuse Change and/or Increase or Decrease -48V DC Power from Existing AT&T BDFB

7.1.4.2 Minor Augments will be completed within forty-five (45) days after receipt of the BFFO for:

- 168 DS1 Terminations at the AT&T Demarcation Frame (Databasing Only; Panels, Relay Racks and Overhead Racking Exist)
- 96 DS3 Terminations at the AT&T Demarcation Frame (Databasing Only; Panels, Relay Racks and Overhead Racking Exist)
- 99 Fiber Terminations at the AT&T Demarcation Frame (Databasing Only; Panels, Relay Racks and Overhead Racking Exist)
- Maximum of 2000 Service Ready DS0 Terminations at the AT&T Demarcation Frame (Databasing Only; Panels, Relay Racks and Overhead Racking Exist)

7.1.4.3 Intermediate Augments will be completed within sixty (60) days after receipt of the BFFO for:

- 168 DS1s (Databasing and Installation of Termination Panels, Relay Racks or Additional Structure, as Required)
- 96 DS3s (Databasing and Installation of Termination Panels, Relay Racks or Additional Structure, as Required)
- 99 Fiber Terminations (Databasing and Installation of Termination Panels, Relay Racks or Additional Structure, as Required)
- 2000 DS0s (Databasing and Installation of Termination Panels, Relay Racks or Additional Structure, as Required)
- Installation of Cable Racking or Other Support Structures, as Required, to Support Co-Carrier Cross Connects (Adequate Floor or Ceiling Structural Capacity Exists and Support/Protection Structure for Fiber Patch Cord is Excluded)

7.1.4.4 Major Augments of physical Collocation Space will be completed within ninety (90) days after BFFO. This category includes all requests for additional Physical Collocation Space (caged or cageless).

7.1.4.5 Major Augments of virtual Collocation Space will be completed within seventy-five (75) days after BFFO. This category includes all requests for additional virtual Collocation Space.

7.1.4.6 If TWTC submits an Augment that includes two Augment items from the same category in either Section 7.1.4.1, 7.1.4.2, or 7.1.4.3 above, the provisioning interval associated with the next highest Augment category will apply (e.g., if two items from the Minor Augment category are requested on the same request, then an interval of sixty (60) days from the receipt of the BFFO would apply, which is the interval associated with the Intermediate Augment category).

7.1.4.7 If TWTC submits an Augment that includes three Augment items from the same category in either Section 7.1.4.1, 7.1.4.2, or 7.1.4.3 above, the Major Augment interval of ninety (90) days from the receipt of the BFFO would apply (e.g., if three items from the Simple Augment category are requested on the same request for a physical Collocation arrangement, then an interval of ninety (90) days from the receipt of the BFFO would apply, which is the Major physical Augment interval; likewise if three items from the Simple Augment category are requested on the same request for a virtual Collocation arrangement, then an interval of seventy-five (75) days from the receipt of the BFFO would apply, which is the Major virtual Augment interval).

7.1.4.8 If TWTC submits an Augment that includes one Augment item from two separate categories in Sections 7.1.4.1, 7.1.4.2 and 7.1.4.3 above, the Augment interval associated with the highest Augment category will apply (e.g., if an item from the Minor Augment category and an item from the Intermediate Augment category are requested on the same request, then an interval of sixty (60) days from the receipt of

the BFFO would apply, which is the interval associated with the Intermediate Augment category).

7.1.4.9 All Augments not expressly included in the Simple, Minor, Intermediate or Major Augment categories, as outlined above, will be placed into the appropriate category as negotiated by TWTC and AT&T. If TWTC and AT&T are unable to determine the appropriate category through negotiation, then the appropriate Major Augment category, identified in Section 7.1.4.4 and Section 7.1.4.5, would apply based on whether the Augment is for TWTC's physical or virtual Collocation Space.

7.1.4.10 Individual application fees associated with Simple, Minor and Intermediate Augments are contained in Exhibit B. If TWTC requests multiple items from different Augment categories, AT&T will bill TWTC the Augment application fee, as identified in Exhibit B of this Attachment, associated with the higher Augment category only. The appropriate application fee will be assessed to TWTC at the time AT&T provides TWTC with the Application Response. TWTC will be assessed a Subsequent Application Fee for all Major Augments (Major Augments are defined above in Sections 7.1.4.4 and 7.1.4.5 for physical and virtual Collocation Space, respectively). The Subsequent Application Fee is also reflected in Exhibit B of this Attachment.

7.2 Joint Planning. Unless otherwise agreed to by the Parties, a joint planning meeting or other method of joint planning between AT&T and TWTC will commence within a maximum of twenty (20) days from AT&T's receipt of a BFFO. At such meeting, the Parties will agree to the preliminary design of the Collocation Space and the equipment configuration requirements, as reflected in the application and affirmed in the BFFO.

7.3 Permits. Each Party, its agent(s) or AT&T Certified Supplier(s) will diligently pursue filing for the permits required for the scope of work to be performed by that Party, its agent(s) or AT&T Certified Supplier(s) within ten (10) days of the completion of the finalized construction design and specifications.

7.4 Circuit Facility Assignments. Unless otherwise specified, AT&T will provide Circuit Facility Assignments (CFAs) to TWTC prior to the applicable provisioning interval set forth herein (Provisioning Interval) for those AT&T Premises in which TWTC has physical Collocation Space with no POT bay or with a grandfathered POT bay provided by AT&T. AT&T cannot provide CFAs to TWTC prior to the Provisioning Interval for those AT&T Premises in which TWTC has physical Collocation Space with a POT bay provided by TWTC or virtual Collocation Space, until TWTC has provided AT&T with the following information:

7.4.1 For physical Collocation Space with a TWTC-provided POT bay, TWTC shall provide AT&T with a complete layout of the POT panels on an Equipment Inventory Update (EIU) form that shows the locations, speeds, etc.

7.4.2 For virtual Collocation Space, TWTC shall provide AT&T with a complete layout of TWTC's equipment on an EIU form, that includes the locations of the low speed ports and the specific frame terminations to which the equipment will be wired by TWTC's AT&T Certified Supplier.

7.4.3 AT&T cannot begin work on the CFAs until the complete and accurate EIU form has been received from TWTC. If the EIU form is provided within ten (10) days prior to the ending date of the Provisioning Interval, then the CFAs will be made available by the ending date of the Provisioning Interval. If the EIU form is not received ten (10) days prior to the ending date of the Provisioning Interval, then the CFAs will be provided within ten (10) days of AT&T's receipt of the EIU form.

7.4.4 AT&T will bill TWTC a nonrecurring charge, as set forth in Exhibit B, each time TWTC requests a resend of its original CFA information for any reason other than a AT&T error in the CFAs initially provided to TWTC.

7.5 Use of AT&T Certified Supplier. TWTC shall select a supplier which has been approved as a AT&T Certified Supplier to perform all engineering and installation work. TWTC, if a AT&T Certified Supplier, or TWTC's AT&T Certified Supplier must follow and comply with all of AT&T's specifications and the following AT&T Technical Requirements: TR 73503, TR 73519, TR 73572, and TR 73564. Unless the AT&T Certified Supplier has met the requirements for all of the required work activities, TWTC must use a different AT&T Certified Supplier for the work activities associated with transmission equipment, switching equipment and power equipment. AT&T shall provide TWTC with a list of AT&T Certified Suppliers, upon request. TWTC, if a AT&T Certified Supplier, or TWTC's AT&T Certified Supplier(s) shall be responsible for installing TWTC's equipment and associated components, extending power cabling to the AT&T power distribution frame, performing operational tests after installation is complete, and notifying AT&T's equipment engineers and TWTC upon successful completion of the installation and any associated work. When a AT&T Certified Supplier is used by TWTC, the AT&T Certified Supplier shall bill TWTC directly for all work performed for TWTC pursuant to this Attachment. AT&T shall have no liability for, nor responsibility to pay, such charges imposed by TWTC's AT&T Certified Supplier. AT&T shall make available its supplier certification program to TWTC or any supplier proposed by TWTC and will not unreasonably withhold certification. All work performed by or for TWTC shall conform to generally accepted industry standards.

7.6 Alarms and Monitoring. AT&T shall place environmental alarms in the AT&T Premises for the protection of AT&T equipment and facilities. TWTC shall be responsible for the placement, monitoring and removal of environmental and equipment alarms used to service TWTC's Collocation Space. Upon request, AT&T will provide TWTC with an applicable AT&T tariffed service(s) to facilitate remote monitoring of collocated equipment by TWTC. Both Parties shall use best efforts to

notify the other of any verified environmental condition (e.g., temperature extremes or excess humidity) known to that Party.

7.7 Virtual to Physical Relocation. In the event physical Collocation Space was previously denied at a AT&T Premises due to technical reasons or space limitations and physical Collocation Space has subsequently become available, TWTC may relocate its existing virtual Collocation arrangement(s) to a physical Collocation arrangement(s) and pay the appropriate fees associated with the rearrangement or reconfiguration of the services being terminated into the virtual Collocation arrangement, as set forth in Exhibit B to this Attachment. If AT&T knows when additional physical Collocation Space may become available at the AT&T Premises requested by TWTC, such information will be provided to TWTC in AT&T's written denial of physical Collocation Space. TWTC must arrange with a AT&T Certified Supplier for the relocation of equipment from a virtual Collocation Space to a physical Collocation Space and will bear the cost of such relocation, including the costs associated with moving the services from the virtual Collocation Space to the new physical Collocation Space.

7.7.1 In Alabama, AT&T will complete a relocation of a virtual collocation arrangement to a cageless physical collocation arrangement within sixty (60) days from AT&T's receipt of a BFFO and from a virtual collocation arrangement to a caged physical collocation arrangement within ninety (90) days from AT&T's receipt of a BFFO.

7.8 Virtual to Physical Conversion (In-Place). Virtual collocation arrangements may be converted to "in-place" physical caged collocation arrangements if the potential conversion meets all of the following criteria: 1) there is no change in the amount of equipment or the configuration of the equipment that was in the virtual Collocation Space; 2) the conversion of the virtual collocation arrangement will not cause the equipment or the results of that conversion to be located in a space that AT&T has reserved for its own future needs; and 3) any changes to the arrangement can be accommodated by existing power, HVAC, and other requirements. Unless otherwise specified herein, AT&T will complete virtual to physical Collocation Space conversions (in-place) within sixty (60) days from receipt of the BFFO. AT&T will bill TWTC an Administrative Only Application Fee, as set forth in Exhibit B, on the date AT&T provides an Application Response to TWTC.

7.8.1 In Alabama and Tennessee, AT&T will complete virtual to physical conversions (in place) within thirty (30) days from receipt of the BFFO as long as the conversion meets all of the criteria specified above in Section 7.8.

7.9 Cancellation. Unless otherwise specified in this Attachment, if at any time prior to Space Acceptance, TWTC cancels its order for Collocation Space (Cancellation), AT&T will bill the applicable nonrecurring charge(s) for any and all work processes for which work has begun or been completed. In Florida, if TWTC cancels its order for Collocation Space at any time prior to the Space Ready Date, no cancellation fee

shall be assessed by AT&T; however, TWTC will be responsible for reimbursing AT&T for any costs specifically incurred by AT&T on behalf of TWTC up to the date that the written notice of cancellation was received by AT&T. In Georgia, if TWTC cancels its order for Collocation Space at any time prior to space acceptance, AT&T will bill TWTC for all costs incurred prior to the date of Cancellation and for any costs incurred as a direct result of the Cancellation, not to exceed the total amount that would have been due had the Firm Order not been canceled.

7.10 Licenses. TWTC, at its own expense, will be solely responsible for obtaining from governmental authorities, and any other appropriate agency, entity, or person, all rights, privileges, permits, licenses, and certificates necessary or required to operate as a provider of telecommunications services to the public or to build-out, equip and/or occupy Collocation Space in a AT&T Premises.

7.11 Environmental Compliance. The Parties agree to utilize and adhere to the Environmental Hazard Guidelines identified in Exhibit A attached hereto.

8. Rates and Charges

8.1 Rates. TWTC agrees to pay the rates and charges identified in Exhibit B attached hereto.

8.2 Application Fees. AT&T shall assess any non-recurring application fees within thirty (30) days of the date that AT&T provides an Application Response to TWTC or on TWTC's next scheduled monthly billing statement.

8.2.1 In Tennessee, the application fee for caged Collocation Space shall be the Application – Cost Planning Fee for both Initial Applications and Subsequent Applications placed by TWTC. Likewise, for cageless Collocation Space, the same Cageless - Application Fee applies for both Initial Applications and Subsequent Applications placed by TWTC. AT&T will bill the appropriate non-recurring application fee on the date that AT&T provides an Application Response to TWTC.

8.3 Recurring Charges. If TWTC has met the applicable fifteen (15) day acceptance walk through interval specified in Section 4.2, billing for recurring charges will begin upon the Space Acceptance Date. In the event TWTC fails to complete an acceptance walk through within the applicable fifteen (15) day interval, billing for recurring charges will commence on the Space Ready Date. If TWTC occupies the space prior to the Space Ready Date, the date TWTC occupies the space is deemed the Space Acceptance Date and billing for recurring charges will begin on that date. The billing for all applicable monthly recurring charges will begin in TWTC 's next billing cycle and will include any prorated charges for the period from TWTC's Space Acceptance Date or Space Ready Date, whichever is appropriate pursuant to Section 4.2, to the date the bill is issued by AT&T.

8.3.1 Unless otherwise stated in Section 8.6 below, monthly recurring charges for -48V DC power will be assessed per fused amp, per month, based upon the total number of fused amps of power capacity requested by TWTC on TWTC's Initial Collocation Application and all Subsequent Collocation Applications, which may either increase or decrease the originally requested, and any subsequently augmented, number of fused amps of power capacity requested, consistent with Commission orders.

8.3.2 AT&T shall have the right to inspect and inventory any DC power fuse installations at a AT&T BDFB or DC power circuit installations at AT&T's main power board for any TWTC collocation arrangement, to verify that the total number of fused amps of power capacity installed by TWTC's AT&T Certified Supplier matches the number of fused amps of DC power capacity requested by TWTC on TWTC's Initial Application and all Subsequent Applications. If AT&T determines that TWTC's AT&T Certified Supplier has installed more DC capacity than TWTC requested on its Initial Application and all Subsequent Applications, AT&T shall notify TWTC in writing of such discrepancy and shall assess TWTC for the additional DC power fuse/circuit capacity from the Space Acceptance Date or Space Ready Date, whichever is applicable pursuant to Section 8.3 above, for the most recent Initial Application or Subsequent Application, submitted for such collocation arrangement. AT&T shall also revise TWTC's recurring DC power charges, on a going-forward basis, to reflect the higher number of fused amps of power capacity available for the collocation arrangement.

8.4 Nonrecurring Charges. In Florida, unless specified otherwise herein, AT&T shall assess nonrecurring charges, including all application fees, within thirty (30) days of the date that AT&T provides an Application Response to TWTC or on TWTC's next scheduled monthly billing statement, if TWTC's current month's billing cycle has already closed. Nonrecurring charges associated with the processing of the Firm Order for collocation space preparation (Firm Order Processing Fee) shall be billed by AT&T within thirty (30) days of AT&T's confirmation of TWTC's BFFO or on TWTC's next scheduled monthly billing statement.

8.5 Space Preparation. Space preparation fees consist of a nonrecurring charge for Firm Order Processing and monthly recurring charges for Central Office Modifications and Common Systems Modifications. For all states except Florida, TWTC shall remit the payment of the non-recurring Firm Order Processing Fee coincident with the submission of TWTC's BFFO. In Florida, the non-recurring Firm Order Processing Fee will be billed by AT&T, pursuant to Section 8.4 above. The monthly recurring charge for Central Office Modifications will be assessed per arrangement, per square foot, for both caged and cageless physical Collocation Space. The monthly recurring charge for Common Systems Modifications will be assessed per arrangement, per square foot, for cageless physical Collocation Space and on a per cage basis for caged physical Collocation Space. These charges

recover the costs associated with preparing the Collocation Space, which includes, but is not limited to, the following items: a survey, engineering of the Collocation Space, and design and modification costs for network, building and support systems.

8.6 Floor Space. The Floor Space Charge includes reasonable charges for lighting, HVAC, and other allocated expenses associated with maintenance of the AT&T Premises; however, this charge does not include any expenses associated with AC or DC power supplied to TWTC's Collocation Space for the operation of TWTC's equipment.
For caged physical Collocation Space, TWTC shall pay floor space charges based upon the number of square feet enclosed. The minimum size for caged Collocation Space is 50 square feet. Additional caged Collocation Space may be requested in increments of 50 square feet. For cageless Collocation Space, TWTC shall pay floor space charges based upon the following floor space calculation: [(depth of the equipment lineup in which the rack is placed) + (0.5 x maintenance aisle depth) + (0.5 x wiring aisle depth)] x (width of rack and spacers). For purposes of this calculation, the depth of the equipment lineup shall consider the footprint of equipment racks plus any equipment overhang. AT&T will assign cageless Collocation Space in conventional equipment rack lineups where feasible. In the event TWTC's collocated equipment requires special cable racking, an isolated ground plane, or any other considerations and treatment which prevents placement within conventional equipment rack lineups, TWTC shall be required to request an amount of floor space sufficient to accommodate the total equipment arrangement.

8.7 Power. AT&T shall make available –48 Volt (-48V) Direct Current (DC) power for TWTC's Collocation Space at a AT&T Battery Distribution Fuse Bay (BDFB). When obtaining DC power from a AT&T BDFB, TWTC's fuses and power cables (for the A & B feeds) must be engineered (sized), and installed by TWTC's AT&T Certified Supplier, in accordance with the number of fused amps of DC power requested by TWTC on TWTC's Initial Application and any Subsequent Applications. TWTC is also responsible for contracting with a AT&T Certified Supplier to run the power distribution feeder cable from the AT&T BDFB to the equipment in TWTC's Collocation Space. The AT&T Certified Supplier contracted by TWTC must provide AT&T with a copy of the engineering power specifications prior to the day on which TWTC's equipment becomes operational (hereinafter "Commencement Date"). AT&T will provide the common power feeder cable support structure between the AT&T BDFB and TWTC's Collocation Space. TWTC shall contract with a AT&T Certified Supplier who shall be responsible for performing those power provisioning activities required to enable TWTC's equipment to become operational, which may include, but are not limited to, the installation, removal or replacement of the following: dedicated power cable support structure within TWTC's Collocation Space, power cable feeds, and terminations of the power cabling. TWTC and TWTC's AT&T Certified Supplier shall comply with all applicable NEC, AT&T

TR73503, Telcordia and ANSI Standards that address power cabling, installation, and maintenance.

8.7.1 In Florida only, pursuant to technical feasibility, commercial availability, and safety limitations, AT&T will permit TWTC to request DC power in 5-amp increments from 5 amps up to 100 amps from the AT&T BDFB. However, in accordance with industry standard fuse sizing, TWTC may request that AT&T provision DC power of 70 amps or greater directly from AT&T's main power board. The industry standard fuse size (which is a circuit breaker on the main power board) available at a AT&T main power board in all AT&T Premises is a 225-amp circuit breaker.

8.7.2 AT&T will revise TWTC's recurring power charges, in accordance with Section 8.3 above, to reflect a power upgrade when TWTC submits a Subsequent Application requesting an increase in the number of fused amps it is currently receiving from AT&T for its Collocation Space. If TWTC's existing fuses and power cables (for the A&B power feed) are not sufficient to support the additional number of fused amps requested, TWTC's AT&T Certified Supplier shall perform whatever activities are necessary, which may include the installation of new/additional fuses or power cables, to comply with the appropriate NEC, AT&T TR73503, Telcordia, and ANSI Standards, as well as the requirements noted above in Section 8.7 and 8.7.1. TWTC's AT&T Certified Supplier shall provide notification to AT&T when these activities have been completed.

8.7.3 AT&T will revise TWTC's recurring power charges, in accordance with Section 8.3 above, to reflect a power reduction upon AT&T's receipt of the Power Reduction Form from TWTC, certifying the completion of the power reduction work, including the removal of any associated power cabling by TWTC's AT&T Certified Supplier. Notwithstanding the foregoing, if TWTC's AT&T Certified Supplier has not removed or, at AT&T's discretion, cut the power cabling within thirty (30) days, the power reduction will not become effective until the cabling is removed or, at AT&T's discretion, cut by TWTC 's AT&T Certified Supplier and TWTC shall pay for the amount of power that had been requested prior to the power reduction request for the period up to the date the power cabling is actually removed.

8.7.4 If TWTC requests an increase or a reduction in the amount of power that AT&T is currently providing, TWTC must submit a Subsequent Application. If no modification to the Collocation Space is requested other than the increase or reduction in power, the Power Reconfiguration Only Application Fee as set forth in Exhibit B will apply. If modifications are requested in addition to the increase or reduction of power, the Subsequent Application Fee will apply. AT&T will bill this nonrecurring fee on the date that AT&T provides an Application Response to TWTC's Subsequent Application.

8.7.5 If TWTC has existing power configurations currently served from the AT&T main power board and requests that its power be reconfigured to connect to a AT&T

BDFB, in a specific central office, TWTC must submit a Subsequent Application. AT&T will respond to such application within seven (7) days and a Subsequent Application fee will apply for this reconfiguration to a AT&T BDFB.

8.7.6 If TWTC elects to install its own DC Power Plant, AT&T shall provide Alternating Current (AC) power to feed TWTC's DC Power Plant. Charges for AC power will be assessed on a per breaker ampere, per month basis, pursuant to the rates specified in Exhibit B. The AC power rates include recovery for the provision of commercial and standby AC power. When obtaining power from a AT&T service panel, protection devices and power cables must be engineered (sized) and installed by TWTC's AT&T Certified Supplier, with the exception that AT&T shall engineer and install protection devices and power cables for Adjacent Collocation. TWTC's AT&T Certified Supplier must provide a copy of the engineering power specifications prior to the Commencement Date. AC power voltage and phase ratings shall be determined on a per location basis. At TWTC's option, TWTC may arrange for AC power in an adjacent collocation arrangement from a retail provider of electrical power.

8.7.7 TWTC shall contract with a AT&T Certified Supplier to perform the installation and removal of dedicated power cable support structure within TWTC's arrangement and terminations of cable within the Collocation Space.

8.7.8 Fused Amp Billing. In all states, except as noted above in 8.7.1 for Florida, AT&T shall make available –48V DC power on a per fused amp, per month basis, pursuant to the following formula:

For power provisioned from a BDFB. The number of fused amps requested by TWTC on its application should reflect a multiplier of 1.5 to convert its requested amps to fused amps, with a minimum of ten (10) fused amps required. The number of fused amps requested by TWTC on its collocation application will be multiplied by the DC power fused amp rate set forth in Exhibit B.

For existing power configurations that are provisioned from AT&T's main power board. The number of fused amps made available at the main power board, in increments of 225 amps/main power board circuit, will be multiplied by the DC power fused amp rate set forth in Exhibit B. In Florida, the number of fused amps requested by TWTC on its collocation application will be multiplied by the DC power fused amp rate set forth in Exhibit B

8.7.9 Florida Power Usage Option. In Florida only, TWTC may request that –48 DC power provisioned by AT&T to TWTC's Collocation Space be assessed per ampere (amp), per month based upon amps used, pursuant to the rates set forth in Exhibit B of this Attachment. Monthly recurring power charges will be assessed on the Space Acceptance Date or Space Ready Date, whichever is appropriate, pursuant to Section 8.3. If TWTC desires to convert existing physical collocation arrangements to the Florida Power Usage Option (hereinafter "FL Option"), then the monthly recurring

power charges that are applicable to the FL Option, contained in Exhibit B, will be assessed on the Space Ready Date associated with the Subsequent Application submitted by TWTC to convert an existing collocation arrangement to the FL Option. The monthly recurring charges for DC power, under the FL Option, shall be calculated and applied based on the amount of power TWTC requests that it be allowed to draw at a given time to a specific physical collocation arrangement in a particular AT&T Premises on TWTC's Initial Application or Subsequent Application. AT&T shall allow TWTC, at TWTC's option, to order a power feed that is capable of delivering a higher DC power level but to fuse this power feed so as to allow a power level less than the feed's maximum to be drawn by TWTC. AT&T is not required to build its central office power infrastructure to meet TWTC's forecasted DC power demand. TWTC must specify on its Initial or Subsequent Application the power level it wishes to be able to draw from AT&T's power plant for each existing collocation arrangement TWTC converts to the FL Option or for any new collocation arrangements TWTC establishes under the FL Option.

8.7.9.1 AT&T, at any time and at its own expense, shall have the right to verify the accuracy of TWTC's power usage under the FL Option for a specific collocation arrangement in a particular AT&T Premises, based on a meter reading(s) taken by AT&T of the amount of power being consumed by TWTC's collocation arrangement. AT&T may perform its own meter reading(s) via any method it chooses, such as, but not limited to, a clamp-on ammeter. If the meter reading(s) varies by more than ten percent (10%) or five (5) amps from the power usage that has been requested by TWTC for the collocation arrangement, under the FL Option, the Parties agree to work cooperatively to reconcile such discrepancy and establish the appropriate usage figure in a reasonable and expeditious manner. If the Parties substantiate AT&T's reading, then AT&T shall adjust TWTC's billing to reflect AT&T's power reading beginning with the first day of the month immediately following the date of the last metered reading taken by AT&T.

8.7.9.2 AT&T shall assess TWTC a monthly recurring charge for DC power under the FL Option, as set forth in Exhibit B of this Attachment. TWTC shall notify AT&T of any change in its DC power usage by submitting a Subsequent Application, which reflects the new DC power level desired by TWTC. The requested change in DC power usage will be reflected in TWTC's next scheduled monthly billing cycle.

8.7.10 <u>Tennessee Caged Collocation Power Usage Metering Option.</u> In Tennessee only, TWTC may request that DC power provisioned by AT&T to TWTC's caged Collocation Space be assessed pursuant to the Tennessee Regulatory Authority's Power Usage Metering Option (hereinafter "TN Option"). If TWTC chooses the TN Option, AT&T will assess TWTC for -48V DC power using the following two components: (1) the actual measured AC usage, and (2) the DC power plant infrastructure provisioned by AT&T to support the total number of fused amps of DC power requested by TWTC on TWTC's Initial Collocation Application and all

Subsequent Collocation Applications. These monthly recurring power charges will be assessed by AT&T on the Space Acceptance Date or Space Ready Date, whichever is appropriate, pursuant to Section 8.3. If TWTC desires to convert an existing caged collocation arrangement to the TN Option, then the monthly recurring power charges that are applicable to the TN Option, contained in Exhibit B, will be assessed on the Space Ready Date associated with the Subsequent Application submitted by TWTC to convert an existing caged collocation arrangement to the TN Option.

8.7.10.1 AT&T, or its AT&T Certified Supplier, will perform all metering activities, which will include providing the necessary ammeter or other measurement device, to measure the actual power usage (AC usage) being drawn by TWTC's collocation equipment on both the A and B power feeds. The AC Usage component of the DC power charge will be based upon the sum of either the instantaneous or busy hour average electric current readings, depending on the capabilities of the ammeter or other measurement device. TWTC may, at its sole cost and expense, install its own meters on those BDFBs located in its own caged Collocation Space(s) and may notify AT&T if it would like to offer AT&T the option of using such meters for the purposes of measuring TWTC's actual power usage. In such case, AT&T, or its AT&T Certified Supplier, will have the option of reading and recording the actual power usage from either the meter installed or maintained by TWTC on TWTC's own BDFB(s) or via a AT&T provided measurement device. The usage reading for the option elected by AT&T shall be used for purposes of calculating the DC power usage billing.

8.7.10.2 If AT&T, or its AT&T Certified Supplier, requires access to TWTC's caged Collocation Space(s) for purposes of measuring the power usage, AT&T or its AT&T Certified Supplier shall provide TWTC with a minimum of forty-eight (48) hours notice that access is required. TWTC shall respond to such request for access within twenty-four (24) hours for the purpose of establishing the date and time of access to TWTC's caged Collocation Space(s). Once the date and time of access to TWTC's caged Collocation Space(s) has been agreed upon, TWTC and AT&T, or its AT&T Certified Supplier, shall adhere to the agreed upon date and time, or provide a minimum of twenty-four (24) hours notice to the other Party if the original appointment(s) will be missed or must be canceled and rescheduled. If TWTC fails to provide access to its caged Collocation Space(s) or fails to provide AT&T, or its AT&T Certified Supplier, with sufficient notification of the missed appointment(s), as noted above, then TWTC shall pay the non-recurring "Additional Meter Reading Trip Charge", as set forth in Exhibit B of this Attachment, for each additional meter reading trip that must be rescheduled to measure TWTC's power usage for such caged Collocation Space(s). TWTC and the AT&T Certified Supplier may jointly agree to less stringent notification requirements to address, for example, any service interruption or restoration of service situations, on a location-by-location basis.

8.7.10.3 For each new caged collocation arrangement for which TWTC desires the TN Option, TWTC shall indicate on TWTC's Initial Application that the TN Option is being

selected. For each location that TWTC wishes to convert to the TN Option, TWTC will submit a Subsequent Application and agrees to include in the Comments section of the Subsequent Application the following comment:

> This Subsequent Application is TWTC's certification that TWTC is opting to convert this caged collocation arrangement to the TN Option and will permit AT&T, or the AT&T Certified Supplier, to measure its actual power usage on all power feeds.

8.7.10.4 AT&T will bill TWTC a Power Reconfiguration Only Application Fee, as set forth in Exhibit B of this Attachment, on the date that AT&T provides an Application Response to each Subsequent Application submitted by TWTC requesting to convert a caged collocation arrangement to the TN Option. AT&T shall then arrange for the measurement of TWTC's actual power usage on each power feed (each A and B power feed) once each quarter at each of TWTC's caged collocation arrangements for which TWTC has submitted an Initial or Subsequent Application electing the TN Option. Based upon the actual power usage measurement taken by AT&T or the AT&T Certified Supplier, AT&T shall assess TWTC for AC power usage for the following quarter based upon TWTC's actual metered usage for each power feed (both the A and B power feeds) or a minimum of ten (10) amps of -48V DC power usage for the sum of the A and B feeds for each power cable, whichever is greater. Such usage shall then be multiplied by the AC power consumption rate, set forth in Exhibit B of this Attachment, to determine the appropriate monthly recurring AC Usage charge that will be billed to TWTC for the following three (3) months or until the next AC power usage measurement is taken, whichever is later.

8.7.10.5 Either Party, within fifteen (15) days of notice of the usage measurement established by the scheduled meter reading, may challenge the accuracy of that reading by requesting a new reading. If TWTC requests that an unscheduled (prior to the next scheduled quarterly power reading date) power usage reading be taken, then TWTC will be responsible for paying the "Additional Meter Reading Trip Charge" contained in Exhibit B of this Attachment. If AT&T requests a power usage reading be taken in this instance, then TWTC will not be charged the "Additional Meter Reading Trip Charge" for the unscheduled meter reading. If the readings vary by more than ten (10) % or five (5) Amps, whichever is greater, the Parties shall work cooperatively to reconcile such discrepancies and establish the appropriate usage figure in a reasonable and expeditious manner. If the readings do not vary outside these ranges, the initial reading will be used to calculate TWTC's AC Usage charge for the next three (3) months.

8.7.10.6 In the event AT&T elects to measure TWTC's power using TWTC's BDFB meter, then AT&T, at any time and at its own expense, shall have the right to verify the accuracy of TWTC's BDFB meter by performing its own meter reading via an alternate method, such as, but not limited to, an ammeter. If the meter readings vary significantly, the Parties agree to perform a joint investigation. If TWTC's BDFB

meter is found to be in error, then TWTC agrees to recalibrate, repair, or replace its meter as required. The Parties recognize that the meter readings discussed in this Attachment are instantaneous readings that can experience minor fluctuations due to usage traffic, voltage fluctuations, and calibration of the meters themselves. The readings must vary by more than ten (10) % or five (5) Amps, whichever is greater, before any recalibration, repair, or replacement will be required. If the AT&T reading is substantiated, AT&T shall adjust TWTC's billing retroactive to the beginning of the quarter for which the last meter reading was taken.

8.7.10.7 When TWTC submits the appropriate Initial or Subsequent Application indicating its desire to elect the TN Option for a specific caged collocation arrangement in a particular AT&T Premises, AT&T will provide the associated Application Response pursuant to Section 6 of this Attachment. It will then be the responsibility of TWTC to submit a BFFO, indicating its desire to proceed with its request to elect the TN Option. After AT&T receives the BFFO from TWTC, the Initial or Subsequent Application will be completed by AT&T within the provisioning intervals contained in Section 7 of this Attachment and TWTC will be notified of the Space Ready Date or when the appropriate record and database changes have been made by AT&T to reflect TWTC's election of the TN Option (which will be considered the "Space Ready Date" for purposes of a Subsequent Application submitted to convert a specific caged collocation arrangement in a particular AT&T Premises to the TN Option). AT&T will not permit TWTC to elect an earlier Space Acceptance Date than the Space Ready Date for any request submitted via a Subsequent Application for an existing caged collocation arrangement. When a Subsequent Application is used to elect the TN Option and there are no other changes requested, billing for the recurring charges associated with the AC Usage and DC Power Infrastructure components will begin upon the Space Ready Date. If TWTC occupies the space prior to the Space Ready Date, for Initial Application requests only, the date TWTC occupies the space will be deemed the new Space Acceptance Date and billing for the AC Usage and DC Power Infrastructure components will begin on that date. When TWTC elects to move to the TN Option, the number of fused amps of DC Power infrastructure capacity requested by TWTC on its Initial or Subsequent Application will be used for calculating the number of amps to be billed for the AC Usage component until such time as AT&T or its AT&T Certified Supplier can perform, under the currently existing quarterly meter reading schedule, a reading of TWTC's power usage for the requested caged Collocation Space. As soon as this reading has been taken, AT&T will adjust TWTC's billing accordingly to reflect the actual metered usage back to the Space Acceptance Date. AT&T will also use this reading for billing purposes until the next quarterly meter reading is performed by AT&T or its AT&T Certified Supplier.

8.7.10.8 AT&T shall assess TWTC the monthly recurring charge as set forth in Exhibit B of this Attachment for AT&T's power plant infrastructure component of the DC power charges based upon the number of fused DC power amps requested by TWTC, as reflected by TWTC on its Initial Application, as well as any Subsequent Applications

(i.e., augment applications), for the particular caged collocation arrangement(s) converted to the TN Option or any new caged collocation arrangement(s) for which TWTC has chosen the TN Option.

8.7.10.9 TWTC agrees to submit a Subsequent Application to notify AT&T when TWTC has removed or installed telecommunications equipment in TWTC's physical Collocation Space to ensure that TWTC's existing fused DC power capacity is sufficiently engineered to accommodate the power requirements associated with the installation of additional equipment in TWTC's Collocation Space. An associated change in power usage will be reflected in the next quarterly power measurement billing cycle.

8.7.10.10 AT&T will bill TWTC a monthly recurring charge per caged Collocation Space for each arrangement that TWTC has converted to the TN Option or has elected the TN Option for new caged Collocation Space. This "Meter Reading" monthly recurring rate element will be assessed to TWTC for the first twelve (12) power circuits (each A and B feed counts as two circuits), and then for each additional two (2) circuits, read by AT&T or its AT&T Certified Supplier, at the rates set forth in Exhibit B of this Attachment and based on whether the power meter is provided by AT&T or its AT&T Certified Supplier or TWTC.

8.7.11 In Alabama and Louisiana, TWTC has the option to purchase power directly from an electric utility company. Under such option, TWTC is responsible for contracting with the electric utility company for its own power feed and meter and is financially responsible for purchasing all equipment necessary to accomplish the arrangement, including inverters, batteries, power boards, bus bars, BDFBs, backup power supplies and cabling. The actual work to install this arrangement must be performed by a AT&T Certified Supplier hired by TWTC. TWTC's AT&T Certified Supplier must comply with all applicable safety codes, including the NEC and National Electric Safety Code (NESC) standards, in the installation of this power arrangement. If TWTC currently has power supplied by AT&T, TWTC may request to change its Collocation Space to obtain power from an electric utility company by submitting a Subsequent Application. AT&T will waive the application fee for this Subsequent Application if no other changes are requested therein. Any floor space, cable racking, etc. utilized by TWTC in provisioning said power will be billed by AT&T on an ICB basis.

8.7.12 In South Carolina, TWTC has the option to purchase power directly from an electric utility company where technically feasible and where space is available in a requested AT&T Premises. Under such option, TWTC is responsible for contracting with the electric utility company for its own power feed and meter, and is financially responsible for purchasing all equipment necessary to accomplish the conversion of the commercial AC power to DC power, including inverters, batteries, power boards, bus bars, BDFBs, backup power supplies and power cabling. The actual work to install this arrangement must be performed by a AT&T Certified Supplier hired by TWTC. TWTC's AT&T Certified Supplier must comply with all applicable national, regional,

state and local safety, electrical, fire and building codes, including the NESC standards, in the installing this power arrangement, just as AT&T is required to comply with these codes. TWTC must submit an application to AT&T for the appropriate amount of Collocation Space that TWTC requires in order to install this type of power arrangement. AT&T will evaluate the request and determine if the appropriate amount of space is available within the AT&T Premises for the installation of TWTC's power equipment and facilities. This type of power arrangement must be located in an appropriate area in the AT&T Premises that has been properly conditioned for the installation of power equipment and conforms to the applicable national, regional, state and local safety, electrical, fire and building codes. AT&T shall waive the application fee or any other nonrecurring charge that would otherwise be due from a competitive local exchange carrier (CLEC) that decides to reconfigure an existing collocation power arrangement so as to purchase power directly from an electric utility company as provided herein. TWTC shall be responsible for the recurring charges associated with the additional space needed in the AT&T Premises for this type of power arrangement, including space required to place associated power-related equipment and facilities (i.e., batteries, generator, fuse panel, power meter, etc.). If there is no space available for this type of power arrangement in the requested AT&T Premises, AT&T may seek a waiver of these requirements from the Commission for the AT&T Premises requested. TWTC would have the option to order its power needs directly from AT&T.

8.7.13 In Alabama and Louisiana, if TWTC has existing power configurations currently served from the AT&T main power board and requests that its power be reconfigured to connect to a AT&T BDFB, in a specific AT&T Premises, TWTC must submit a Subsequent Application to AT&T. AT&T will provide a response to such application within seven (7) days and no application fee will be assessed by AT&T for this one time only power reconfiguration to a AT&T BDFB. For any power reconfigurations thereafter, TWTC will submit a Subsequent Application and the appropriate application fee will apply.

8.8 Cable Installation. Cable Installation fees will be assessed on a per entrance cable basis. This nonrecurring charge will be billed by AT&T upon receipt of TWTC's BFFO.

8.9 Cable Records. Cable Records charges apply for work activities required to build or remove existing cable records assigned to TWTC in AT&T's database systems. The VG/DS0 per cable record charge is for a maximum of 3,600 records per request. The fiber cable record charge is for a maximum of 99 records per request. Cable Record fees will be assessed as a nonrecurring charge, upon receipt of TWTC's BFFO, in all AT&T states, except Louisiana. In Louisiana, Cable Record fees will be assessed on a monthly recurring charge basis, upon receipt of TWTC's BFFO.

8.10 Security Escort. After TWTC has used its one accompanied site visit, pursuant to Section 5.12.1, and prior to TWTC's completion of the AT&T Security Training

requirements, contained in Section 12 of this Agreement, a security escort will be required when TWTC's employees, approved agent, supplier, or Guest(s) desire access to the entrance manhole or a AT&T Premises. The rates for security escort service are assessed pursuant to the fee schedule contained in Exhibit B, beginning with the scheduled escort time agreed to by the Parties. AT&T will wait for one-half (1/2) hour after the scheduled escort time to provide such requested escort service and TWTC shall pay for such half-hour charges in the event TWTC's employees, approved agent, supplier or Guest(s) fails to show up for the scheduled escort appointment.

8.11 Other. If no collocation rate element and associated rate is identified in Exhibit B of this Attachment, the Parties, upon request by either Party, will negotiate the rate for the specific collocation service or function identified in this Attachment.

9. Insurance

9.1 TWTC shall, at its sole cost and expense, procure, maintain, and keep in force insurance as specified in this Section and underwritten by insurance companies licensed to do business in the states applicable under this Agreement and having a Best's Insurance Rating of A-.

9.2 TWTC shall maintain the following specific coverage:

9.2.1 Commercial General Liability coverage in the amount of ten million dollars ($10,000,000.00) or a combination of Commercial General Liability and Excess/Umbrella coverage totaling not less than ten million dollars ($10,000,000.00). AT&T shall be named as an Additional Insured on the Commercial General Liability policy as specified herein.

9.2.2 Statutory Workers Compensation coverage and Employers Liability coverage in the amount of one hundred thousand dollars ($100,000.00) each accident, one hundred thousand dollars ($100,000.00) each employee by disease, and five hundred thousand dollars ($500,000.00) policy limit by disease.

9.2.3 All Risk Property coverage on a full replacement cost basis insuring all of TWTC's real and personal property situated on or within a AT&T Premises.

9.2.4 TWTC may elect to purchase business interruption and contingent business interruption insurance, having been advised that AT&T assumes no liability for loss of profit or revenues should an interruption of service occur.

9.3 The limits set forth in Section 9.2 above may be increased by AT&T from time to time during the term of this Agreement, upon thirty (30) days notice to TWTC, to at least such minimum limits as shall then be customary with respect to comparable occupancy of AT&T structures.

9.4 All policies purchased by TWTC shall be deemed to be primary and not contributing to or in excess of any similar coverage purchased by AT&T. All insurance must be in effect on or before the date equipment is delivered to AT&T's Premises and shall remain in effect for the term of this Agreement or until all of TWTC's property has been removed from AT&T's Premises, whichever period is longer. If TWTC fails to maintain required coverage, AT&T may pay the premiums thereon and seek reimbursement of same from TWTC.

9.5 TWTC shall submit certificates of insurance reflecting the coverage required pursuant to this Section within a minimum of ten (10) business days prior to the commencement of any work in the Collocation Space. Failure to meet this interval may result in construction and equipment installation delays. TWTC shall arrange for AT&T to receive thirty (30) business days' advance notice of cancellation or non-renewal from TWTC's insurance company. TWTC shall forward a certificate of insurance and notice of cancellation/non-renewal to AT&T at the following address:

BellSouth Telecommunications, Inc.
Attn.: Risk Management Office - Finance
17F54 AT&T Center
675 W. Peachtree Street
Atlanta, Georgia 30375

9.6 TWTC must conform to recommendations made by AT&T's fire insurance company to the extent AT&T has agreed to, or shall hereafter agree to, such recommendations.

9.7 Self-Insurance. If TWTC's net worth exceeds five hundred million dollars ($500,000,000.00), TWTC may elect to request self-insurance status in lieu of obtaining any of the insurance required in Section 9.2. TWTC shall provide audited financial statements to AT&T thirty (30) days prior to the commencement of any work in the Collocation Space. AT&T shall then review such audited financial statements and respond in writing to TWTC in the event that self-insurance status is not granted to TWTC. If AT&T approves TWTC for self-insurance, TWTC shall annually furnish to AT&T, and keep current, evidence of such net worth that is attested to by one of TWTC's corporate officers. The ability to self-insure shall continue so long as the TWTC meets all of the requirements of this Section. If TWTC subsequently no longer satisfies the requirements of this Section, TWTC is required to purchase insurance as indicated by Section 9.2.

9.8 The net worth requirements set forth in Section 9.7 may be increased by AT&T from time to time during the term of this Agreement upon thirty (30) days' notice to TWTC to at least such minimum limits as shall then be customary with respect to comparable occupancy of a AT&T Premises

9.9 Failure to comply with the provisions of this Section will be deemed a material breach of this Attachment.

10. Mechanics Lien

10.1 If any mechanics lien or other liens are filed against property of either Party (AT&T or TWTC), or any improvement thereon by reason of or arising out of any labor or materials furnished or alleged to have been furnished or to be furnished to or for the other Party or by reason of any changes, or additions to said property made at the request or under the direction of the other Party, the other Party directing or requesting those changes shall, within thirty (30) business days after receipt of written notice from the Party against whose property said lien has been filed, either pay such lien or cause the same to be bonded off the affected property in the manner provided by law. The Party causing said lien to be placed against the property of the other shall also defend, at its sole cost and expense, on behalf of the other, any action, suit or proceeding which may be brought for the enforcement of such liens and shall pay any damage and discharge any judgment entered thereon.

11. Inspections

11.1 AT&T may conduct an inspection of TWTC's equipment and facilities in TWTC's Collocation Space(s) prior to the activation of facilities and/or services between TWTC's equipment and equipment of AT&T. AT&T may conduct an inspection if TWTC adds equipment and may otherwise conduct routine inspections at reasonable intervals mutually agreed upon by the Parties. AT&T shall provide TWTC with a minimum of forty-eight (48) hours or two (2) business days, whichever is greater, advance notice of all such inspections. All costs of such inspections shall be borne by AT&T.

12. Security and Safety Requirements

12.1 Unless otherwise specified, TWTC will be required, at its own expense, to conduct a statewide investigation of criminal history records for each TWTC employee hired in the past five years being considered for work on a AT&T Premises, for the states/counties where the TWTC employee has worked and lived for the past five years. Where state law does not permit statewide collection or reporting, an investigation of the applicable counties is acceptable. TWTC shall not be required to perform this investigation if an affiliated company of TWTC has performed an investigation of the TWTC employee seeking access, if such investigation meets the criteria set forth above. This requirement will not apply if TWTC has performed a pre-employment statewide investigation of criminal history records of the TWTC employee for the states/counties where the TWTC employee has worked and lived for the past five years or, where state law does not permit a statewide investigation, an investigation of the applicable counties.

12.2 TWTC will be required to administer to its personnel assigned to the AT&T Premises security training either provided by AT&T, or meeting criteria defined by AT&T at www.interconnection.bellsouth.com/guides.

12.3 TWTC shall provide its employees and agents with picture identification, which must be worn and visible at all times while in TWTC's Collocation Space or other areas in or around the AT&T Premises. The photo identification card shall bear, at a minimum, the employee's name and photo and TWTC's name. AT&T reserves the right to remove from a AT&T Premises any employee of TWTC not possessing identification issued by TWTC or who has violated any of AT&T's policies as outlined in the CLEC Security Training documents. TWTC shall hold AT&T harmless for any damages resulting from such removal of TWTC's personnel from a AT&T Premises. TWTC shall be solely responsible for ensuring that any Guest(s) of TWTC is in compliance with all subsections of this Section.

12.4 TWTC shall not assign to the AT&T Premises any personnel with records of felony criminal convictions. TWTC shall not assign to the AT&T Premises any personnel with records of misdemeanor convictions, except for misdemeanor traffic violations, without advising AT&T of the nature and gravity of the offense(s). AT&T reserves the right to refuse building access to any of TWTC's personnel who have been identified to have misdemeanor criminal convictions. Notwithstanding the foregoing, in the event TWTC chooses not to advise AT&T of the nature and gravity of any misdemeanor conviction, TWTC may, in the alternative, certify to AT&T that it shall not assign to the AT&T Premises any personnel with records of misdemeanor convictions (other than misdemeanor traffic violations).

12.4.1 TWTC shall not knowingly assign to the AT&T Premises any individual who was a former employee of AT&T and whose employment with AT&T was terminated for a criminal offense, whether or not AT&T sought prosecution of the individual for the criminal offense.

12.4.2 TWTC shall not knowingly assign to the AT&T Premises any individual who was a former supplier of AT&T and whose access to a AT&T Premises was revoked due to the commission of a criminal offense, whether or not AT&T sought prosecution of the individual for the criminal offense.

12.5 For each TWTC employee or agent hired by TWTC within the last five years, who requires access to a AT&T Premises to perform work in TWTC Collocation Space(s), TWTC shall furnish AT&T certification that the aforementioned background check and security training were completed. This certification must be provided to and approved by AT&T before an employee or agent will be granted such access to a AT&T Premises. The certification will contain a statement that no felony convictions were found and certify that the employee completed the security training. If the employee's criminal history includes misdemeanor convictions, TWTC will disclose the nature of the convictions to AT&T at that time. In the alternative, TWTC may certify to AT&T that it shall not assign to the AT&T Premises any personnel with records of misdemeanor convictions, other than misdemeanor traffic violations.

12.5.1 For all other TWTC employees requiring access to a AT&T Premises pursuant to this Attachment, TWTC shall furnish AT&T, prior to an employee gaining such access, a certification that the employee is not subject to the requirements of Section 12.5 above and that security training was completed by the employee.

12.6 At AT&T's request, TWTC shall promptly remove from the AT&T Premises any employee of TWTC that AT&T does not wish to grant access to a AT&T Premises: 1) pursuant to any investigation conducted by AT&T, or 2) prior to the initiation of an investigation if an employee of TWTC is found interfering with the property or personnel of AT&T or another collocated telecommunications carrier, provided that an investigation shall be promptly commenced by AT&T.

12.7 Security Violations. AT&T reserves the right to interview TWTC's employees, agents, suppliers, or Guests in the event of wrongdoing in or around a AT&T Premises or involving AT&T's or another collocated telecommunications carrier's property or personnel, provided that AT&T shall provide reasonable notice to TWTC's Security representative of such interview. TWTC and its employees, agents, suppliers, or Guests shall reasonably cooperate with AT&T's investigation into allegations of wrongdoing or criminal conduct committed by, witnessed by, or involving TWTC's employees, agents, suppliers, or Guests. Additionally, AT&T reserves the right to bill TWTC for all reasonable costs associated with investigations involving its employees, agents, suppliers, or Guests if it is established and mutually agreed in good faith that TWTC's employees, agents, suppliers, or Guests are responsible for the alleged act(s). AT&T shall bill TWTC for AT&T property, which is stolen or damaged, where an investigation determines the culpability of TWTC's employees, agents, suppliers, or Guests and where TWTC agrees, in good faith, with the results of such investigation. TWTC shall notify AT&T in writing immediately in the event that TWTC discovers one of its employees, agents, suppliers, or Guests already working on the AT&T Premises is a possible security risk. Upon request of the other Party, the Party who is the employer shall discipline consistent with its employment practices, up to and including removal from AT&T's Premises, any employee found to have violated the security and safety requirements of this Section. TWTC shall hold AT&T harmless for any damages resulting from such removal of TWTC's personnel from a AT&T Premises.

12.8 Use of Supplies. Unauthorized use of equipment, supplies or other property by either Party, whether or not used routinely to provide telephone service will be strictly prohibited and handled appropriately. Costs associated with such unauthorized use may be charged to the offending Party, as may be all associated investigative costs.

12.9 Use of Official Lines. Except for non-toll calls necessary in the performance of their work, neither Party shall use the telephone(s) of the other Party on AT&T's Premises. Charges for unauthorized telephone calls may be charged to the offending Party, as may be all associated investigative costs.

12.10 Accountability. Full compliance with the Security requirements of this Section shall in no way limit the accountability of either Party to the other for the improper actions of its employees, agents, suppliers, or Guests.

13. Destruction of Collocation Space

13.1 In the event a Collocation Space is wholly or partially damaged by fire, windstorm, hurricane, tornado, flood or by similar force majeure circumstances to such an extent as to be rendered wholly unsuitable for TWTC's permitted use hereunder, then either Party may elect within ten (10) days after such damage, to terminate occupancy of the damaged Collocation Space, and if either Party shall so elect, by giving the other written notice of termination, both Parties shall stand released of and from further liability under the terms hereof. If the Collocation Space shall suffer only minor damage and shall not be rendered wholly unsuitable for TWTC's permitted use, or is damaged and the option to terminate is not exercised by either Party, AT&T covenants and agrees to proceed promptly without expense to TWTC, except for improvements not to the property of AT&T, to repair the damage. AT&T shall have a reasonable time within which to rebuild or make any repairs, and such rebuilding and repairing shall be subject to delays caused by storms, shortages of labor and materials, government regulations, strikes, walkouts, and causes beyond the control of AT&T, which causes shall not be construed as limiting factors, but as exemplary only. TWTC may, at its own expense, accelerate the rebuild of its Collocation Space and equipment provided, however, that a AT&T Certified Supplier is used and the necessary space preparation has been completed. If TWTC's acceleration of the project increases the cost of the project, then those additional charges will be incurred at TWTC's expense. Where allowed and where practical, TWTC may erect a temporary facility while AT&T rebuilds or makes repairs. In all cases where the Collocation Space shall be rebuilt or repaired, TWTC shall be entitled to an equitable abatement of rent and other charges, depending upon the unsuitability of the Collocation Space for TWTC's permitted use, until such Collocation Space is fully repaired and restored and TWTC's equipment installed therein (but in no event later than thirty (30) days after the Collocation Space is fully repaired and restored). Where TWTC has placed an Adjacent Arrangement pursuant to Section 3.4, TWTC shall have the sole responsibility to repair or replace said Adjacent Arrangement provided herein. Pursuant to this Section, AT&T will restore the associated services to the Adjacent Arrangement.

14. Eminent Domain

14.1 If the whole of a Collocation Space or Adjacent Arrangement shall be taken by any public authority under the power of eminent domain, then this Attachment shall terminate with respect to such Collocation Space or Adjacent Arrangement as of the date possession shall be taken by such public authority and rent and other charges for the Collocation Space or Adjacent Arrangement shall be paid up to that day with a proportionate refund by AT&T of such rent and charges as may have been paid in

advance for a period subsequent to the date of the taking. If any part of the Collocation Space or Adjacent Arrangement shall be taken under eminent domain, AT&T and TWTC shall each have the right to terminate this Attachment with respect to such Collocation Space or Adjacent Arrangement and declare the same null and void, by written notice of such intention to the other Party within ten (10) days after such taking.

15. <u>Nonexclusivity</u>

15.1 TWTC understands that this Attachment is not exclusive and that AT&T may enter into similar agreements with other Parties. Assignment of Collocation Space pursuant to all such agreements shall be determined by space availability and made on a first come, first served basis

ENVIRONMENTAL AND SAFETY PRINCIPLES

The following principles provide basic guidance on environmental and safety issues when applying for and establishing physical collocation arrangements.

1. GENERAL PRINCIPLES

1.1 Compliance with Applicable Law. AT&T and TWTC agree to comply with applicable federal, state, and local environmental and safety laws and regulations including U.S. Environmental Protection Agency (USEPA) regulations issued under the Clean Air Act (CAA), Clean Water Act (CWA), Resource Conservation and Recovery Act (RCRA), Comprehensive Environmental Response, Compensation and Liability Act (CERCLA), Superfund Amendments and Reauthorization Act (SARA), the Toxic Substances Control Act (TSCA), and OSHA regulations issued under the Occupational Safety and Health Act of 1970, as amended, and National Fire Protection Association (NFPA), NEC and National Electric Safety Codes (NESC) (Applicable Laws) requirements. Each Party shall notify the other if compliance inspections are conducted by regulatory agencies and/or citations are issued that relate to any aspect of this Attachment.

1.2 Notice. AT&T and TWTC shall provide notice to the other, including any Material Safety Data Sheets (MSDSs), of known and recognized physical hazards or Hazardous Chemicals existing on site or brought on site. A Hazardous Chemical inventory list is posted on an OSHA Poster and updated annually at each Central Office. This Poster is normally located near the front entrance of the building or in the lounge area. Each Party is required to provide specific notice for known potential Imminent Danger conditions. TWTC should contact 1-800-743-6737 for any AT&T MSDS required.

1.3 Practices/Procedures. AT&T may make available additional environmental control procedures for TWTC to follow when working at a AT&T Premises (See Section 2, below). These practices/procedures will represent the regular work practices required to be followed by the employees and suppliers of AT&T for environmental protection. TWTC will require its suppliers, agents, Guests, and others accessing the AT&T Premises to comply with these practices. Section 2 lists the Environmental categories where BST practices should be followed by TWTC when operating in the AT&T Premises.

1.4 Environmental and Safety Inspections. AT&T reserves the right to inspect the TWTC space with proper notification. AT&T reserves the right to stop any TWTC work operation that imposes Imminent Danger to the environment, employees or other persons in or around a AT&T Premises.

1.5 Hazardous Materials Brought On Site. Any hazardous materials brought into, used, stored or abandoned at a AT&T Premises by TWTC are owned by and considered the property of TWTC. TWTC will indemnify AT&T for claims, lawsuits or damages to persons or property caused by these materials. Without prior written AT&T approval, no substantial new safety or environmental hazards can be created by TWTC or different hazardous materials used by TWTC at a AT&T Premises. TWTC must demonstrate adequate emergency response capabilities for the materials used by TWTC or remaining at a AT&T Premises.

1.6 Spills and Releases. When contamination is discovered at a AT&T Premises, either Party discovering the condition must notify the other Party. All Spills or Releases of regulated materials will immediately be reported by TWTC to AT&T.

1.7 Coordinated Environmental Plans and Permits. AT&T and TWTC will coordinate plans, permits or information required to be submitted to government agencies, such as emergency response plans, spill prevention control and countermeasures (SPCC) plans and community reporting. If fees are associated with filing, AT&T and TWTC will develop a cost sharing procedure. If AT&T's permit or EPA identification number must be used, TWTC must comply with all of AT&T's permit conditions and environmental processes, including environmental "best management practices (BMP)" (see Section 2, below) and the selection of BST disposition vendors and disposal sites.

1.8 Environmental and Safety Indemnification. AT&T and TWTC shall indemnify, defend and hold harmless the other Party from and against any claims (including, without limitation, third-party claims for personal injury or death or real or personal property damage), judgments, damages (including direct and indirect damages and punitive damages), penalties, fines, forfeitures, costs, liabilities, interest and losses arising in connection with the violation or alleged violation of any Applicable Law or contractual obligation or the presence or alleged presence of contamination arising out of the acts or omissions of the indemnifying Party, its employees, agents, suppliers, or Guests concerning its operations at a AT&T Premises.

2. CATEGORIES FOR CONSIDERATION OF ENVIRONMENTAL ISSUES

2.1 When performing functions that fall under the following Environmental categories on AT&T's Premises, TWTC agrees to comply with the applicable sections of the current issue of AT&T's Environmental and Safety Methods and Procedures (M&Ps), incorporated herein by this reference. TWTC further agrees to cooperate with AT&T to ensure that TWTC's employees, agents, suppliers and/or Guests are knowledgeable of and satisfy those provisions of AT&T's Environmental M&Ps, which apply to the specific Environmental function being performed by TWTC, its employees, agents, suppliers, and/or Guests.

2.2 The most current version of the reference documentation must be requested from TWTC's AT&T Regional Contract Manager (RCM).

ENVIRONMENTAL CATEGORIES	ENVIRONMENTAL ISSUES	ADDRESSED BY THE FOLLOWING DOCUMENTATION
Disposal of hazardous material or other regulated material (e.g., batteries, fluorescent	Compliance with all applicable local, state, & federal laws and regulations	Std T&C 450 Fact Sheet Series 17000

tubes, solvents & cleaning materials)	Pollution liability insurance EVET approval of supplier	Std T&C 660-3 Approved Environmental Vendor List (Contact RCM Representative)
Emergency response	Hazmat/waste release/spill fire safety emergency	Fact Sheet Series 17000 Building Emergency Operations Plan (EOP) (specific to and located on AT&T's Premises)
Contract labor/outsourcing for services with environmental implications to be performed on AT&T Premises (e.g., disposition of hazardous material/waste; maintenance of storage tanks)	Compliance with all applicable local, state, & federal laws and regulations Performance of services in accordance with BST's environmental M&Ps Insurance	Std T&C 450 Std T&C 450-B (Contact RCM Representative for copy of appropriate E/S M&Ps.) Std T&C 660
Transportation of hazardous material	Compliance with all applicable local, state, & federal laws and regulations Pollution liability insurance EVET approval of supplier	Std T&C 450 Fact Sheet Series 17000 Std T&C 660-3 Approved Environmental Vendor List (Contact RCM Representative)
Maintenance/operations work which may produce a waste Other maintenance work	Compliance with all applicable local, state, & federal laws and regulations Protection of BST employees and equipment	Std T&C 450 29CFR 1910.147 (OSHA Standard) 29CFR 1910 Subpart O (OSHA Standard)
Janitorial services	All waste removal and disposal must conform to all applicable federal, state and local regulations	Procurement Manager (CRES Related Matters)-BST Supply Chain Services

	All Hazardous Material and Waste Asbestos notification and protection of employees and equipment	Fact Sheet Series 17000 GU-BTEN-001BT, Chapter 3 BSP 010-170-001BS (Hazcom)
Manhole cleaning	Compliance with all applicable local, state, & federal laws and regulations Pollution liability insurance EVET approval of supplier	Std T&C 450 Fact Sheet 14050 BSP 620-145-011PR Issue A, August 1996 Std T&C 660-3 Approved Environmental Vendor List (Contact RCM Representative)
Removing or disturbing building materials that may contain asbestos	Asbestos work practices	GU-BTEN-001BT, Chapter 3 For questions regarding removing or disturbing materials that contain asbestos, call the AT&T Building Service Center: AL, MS, TN, KY & LA (local area code) 557-6194 FL, GA, NC & SC (local area code) 780-2740

3. DEFINITIONS

Generator. Under RCRA, the person whose act produces a Hazardous Waste, as defined in 40 CFR 261, or whose act first causes a Hazardous Waste to become subject to regulation. The Generator is legally responsible for the proper management and disposal of Hazardous Wastes in accordance with regulations.

Hazardous Chemical. As defined in the U.S. Occupational Safety and Health (OSHA) hazard communication standard (29 CFR 1910.1200), any chemical which is a health hazard or physical hazard.

Hazardous Waste. As defined in Section 1004 of RCRA.

Imminent Danger. Any conditions or practices at a AT&T Premises which are such that a danger exists which could reasonably be expected to cause immediate death or serious harm to people or immediate significant damage to the environment or natural resources.

Spill or Release. As defined in Section 101 of CERCLA.

4. ACRONYMS

RCM – Regional Collocation Manager (f/k/a Account Team Collocation Coordinator)

BST – BST Telecommunications

CRES – Corporate Real Estate and Services (formerly PS&M)

DEC/LDEC - Department Environmental Coordinator/Local Department Environmental Coordinator

E/S – Environmental/Safety

EVET - Environmental Vendor Evaluation Team

GU-BTEN-001BT - AT&T Environmental Methods and Procedures

NESC - National Electrical Safety Codes

P&SM - Property & Services Management

Std T&C - Standard Terms & Conditions

COLLOCATION - South Carolina														Att: 4 Exh: B			
CATEGORY		RATE ELEMENTS	Interim	Zone	BCS	USOC	RATES($)					Svc Order Submitted Elec per LSR	Svc Order Submitted Manually per LSR	Incremental Charge - Manual Svc Order vs. Electronic-1st	Incremental Charge - Manual Svc Order vs. Electronic-Add'l	Incremental Charge - Manual Svc Order vs. Electronic-Disc 1st	Incremental Charge - Manual Svc Order vs. Electronic-Disc Add'l
							Rec	Nonrecurring		Nonrecurring Disconnect		OSS Rates($)					
								First	Add'l	First	Add'l	SOMEC	SOMAN	SOMAN	SOMAN	SOMAN	SOMAN
PHYSICAL COLLOCATION																	
	Application																
		Physical Collocation - Initial Application Fee			CLO	PE1BA		1,883.67		0.51							
		Physical Collocation - Subsequent Application Fee			CLO	PE1CA		1,570.10		0.51							
		Physical Collocation - Co-Carrier Cross Connects/Direct Connect, Application Fee, per application			CLO	PE1DT		584.42									
		Physical Collocation Administrative Only - Application Fee			CLO	PE1BL		743.66									
		Physical Collocation - Application Cost, Simple Augment			CLO	PE1KS		594.27		1.21							
		Physical Collocation - Application Cost, Minor Augment			CLO	PE1KM		833.26		1.21							
		Physical Collocation - Application Cost, Intermediate Augment			CLO	PE1K1		1,058.00		1.21							
		Physical Collocation - Application Cost - Major Augment			CLO	PE1KJ		2,409.00		1.21							
	Space Preparation																
		Physical Collocation - Floor Space, per sq feet			CLO	PE1PJ	3.95										
		Physical Collocation - Space Enclosure, welded wire, first 50 square feet			CLO	PE1BX	197.69										
		Physical Collocation - Space enclosure, welded wire, first 100 square feet			CLO	PE1BW	219.19										
		Physical Collocation - Space enclosure, welded wire, each additional 50 square feet			CLO	PE1CW	21.50										
		Physical Collocation - Space Preparation - C.O. Modification per square ft.			CLO	PE1SK	2.75										
		Physical Collocation - Space Preparation, Common Systems Modifications-Cageless, per square foot			CLO	PE1SL	3.24										
		Physical Collocation - Space Preparation - Common Systems Modifications-Caged, per cage			CLO	PE1SM	110.16										
		Physical Collocation - Space Preparation - Firm Order Processing			CLO	PE1SJ		602.05									
		Physical Collocation - Space Availability Report, per Central Office Requested			CLO	PE1SR		1,077.57									
	Power																
		Physical Collocation - Power, -48V DC Power - per Fused Amp Requested			CLO	PE1PL	9.19										
		Physical Collocation - Power, 120V AC Power, Single Phase, per Breaker Amp			CLO	PE1FB	5.67										
		Physical Collocation - Power, 240V AC Power, Single Phase, per Breaker Amp			CLO	PE1FD	11.36										
		Physical Collocation - Power, 120V AC Power, Three Phase, per Breaker Amp			CLO	PE1FE	17.03										
		Physical Collocation - Power, 277V AC Power, Three Phase, per Breaker Amp			CLO	PE1FG	39.33										
	Cross Connects (Cross Connects, Co-Carrier Cross Connects, and Ports)																
		Physical Collocation - 2-wire cross-connect, loop, provisioning			UEANL,UEQ, UNCNX, UEA, UCL, UAL, UHL, UDN, UNCVX	PE1P2	0.0341	12.32	11.83	6.04	5.45						
		Physical Collocation - 4-wire cross-connect, loop, provisioning			UEA, UHL, UNCVX, UNCDX, UCL, UDL	PE1P4	0.0682	12.42	11.90	6.40	5.74						
		Physical Collocation -DS1 Cross-Connect for Physical Collocation, provisioning			WDS1L, WDS1S, UXTD1, ULDD1, USLEL, UNLD1, U1TD1, UNC1X, UEPSR, UEPSB, UEPSE, UEPSP, USL, UEPEX, UEPDX	PE1P1	1.12	22.08	15.96	6.42	5.80						
		Physical Collocation - DS3 Cross-Connect, provisioning			UE3, U1TD3, UXTD3, UXTS1, UNC3X, UNCSX, ULDD3, U1TS1, ULDS1, UNLD3, UEPEX, UEPDX, UEPSR, UEPSB, UEPSE, UEPSP	PE1P3	14.21	20.94	15.23	7.39	5.93						

COLLOCATION - South Carolina

Att: 4 Exh: B

CATEGORY	RATE ELEMENTS	Interim	Zone	BCS	USOC	RATES($) Rec	Nonrecurring First	Nonrecurring Add'l	Nonrecurring Disconnect First	Nonrecurring Disconnect Add'l	Svc Order Submitted Elec per LSR	Svc Order Submitted Manually per LSR	Incremental Charge - Manual Svc Order vs. Electronic- 1st	Incremental Charge - Manual Svc Order vs. Electronic- Add'l	Incremental Charge - Manual Svc Order vs. Electronic- Disc 1st	Incremental Charge - Manual Svc Order vs. Electronic- Disc Add'l
											OSS Rates($)					
											SOMEC	SOMAN	SOMAN	SOMAN	SOMAN	SOMAN
	Physical Collocation - 2-Fiber Cross-Connect			CLO, ULDO3, ULD12, ULD48, U1TO3, U1T12, U1T48, UDLO3, UDL12, UDF	PE1F2	2.82	20.94	15.23	7.40	5.93						
	Physical Collocation - 4-Fiber Cross-Connect			ULDO3, ULD12, ULD48, U1TO3, U1T12, U1T48, UDLO3, UDL12, UDF, UDFCX	PE1F4	5.01	25.61	19.90	9.73	8.26						
	Physical Collocation - Co-Carrier Cross Connects/Direct Connect - Fiber Cable Support Structure, per linear foot, per cable.			CLO	PE1ES	0.001										
	Physical Collocation - Co-Carrier Cross Connect/Direct Connect - Copper/Coax Cable Support Structure, per linear foot, per cable.			CLO	PE1DS	0.0015										
	Physical Collocation 2-Wire Cross Connect, Port			UEPSR, UEPSP, UEPSE, UEPSB, UEPSX, UEP2C	PE1R2	0.0341	12.32	11.83	6.04	5.45		15.69				
	Physical Collocation 4-Wire Cross Connect, Port			UEPEX, UEPDD	PE1R4	0.0682	12.42	11.90	6.40	5.74		15.69				
Security																
	Physical Collocation - Security Escort for Basic Time - normally scheduled work, per half hour			CLO	PE1BT		16.96	10.75								
	Physical Collocation - Security Escort for Overtime - outside of normally scheduled working hours on a scheduled work day, per half hour			CLO	PE1OT		22.10	13.89								
	Physical Collocation - Security Escort for Premium Time - outside of scheduled work day, per half hour			CLO	PE1PT		27.23	17.02								
	Physical Collocation - Security Access System, Security System, per Central Office			CLO	PE1AX	74.72										
	Physical Collocation -Security Access System - New Card Activation, per Card Activation (First), per State			CLO	PE1A1	0.0601	27.85									
	Physical Collocation-Security Access System-Administrative Change, existing Access Card, per Request, per State, per Card			CLO	PE1AA		7.81									
	Physical Collocation - Security Access System - Replace Lost or Stolen Card, per Card			CLO	PE1AR		22.83									
	Physical Collocation - Security Access - Initial Key, per Key			CLO	PE1AK		13.13									
	Physical Collocation - Security Access - Key, Replace Lost or Stolen Key, per Key			CLO	PE1AL		13.13									
CFA																
	Physical Collocation - CFA Information Resend Request, per premises, per arrangement, per request			CLO	PE1C9		77.71									
Cable Records - Note: The rates in the First & Additional columns will actually be billed as "Initial I" and "Subsequent S" respectively																
	Physical Collocation - Cable Records, per request			CLO	PE1CR		I 760.98	S 489.20	133.29							
	Physical Collocation, Cable Records, VG/DS0 Cable, per cable record (maximum 3600 records)			CLO	PE1CD		327.65		189.54							
	Physical Collocation, Cable Records, VG/DS0 Cable, per each 100 pair			CLO	PE1CO		4.82		5.91							
	Physical Collocation, Cable Records, DS1, per T1 TIE			CLO	PE1C1		2.26		2.77							
	Physical Collocation, Cable Records, DS3, per T3 TIE			CLO	PE1C3		7.90		9.68							
	Physical Collocation - Cable Records, Fiber Cable, per cable record (maximum 99 records)			CLO	PE1CB		84.68		77.30							
	Physical Collocation, Cable Records,CAT5/RJ45			CLO	PE1C5		2.26		2.77							
Virtual to Physical																
	Physical Collocation - Virtual to Physical Collocation Relocation, per Voice Grade Circuit			CLO	PE1BV		33.00									
	Physical Collocation - Virtual to Physical Collocation Relocation, per DSO Circuit			CLO	PE1BO		33.00									
	Physical Collocation - Virtual to Physical Collocation Relocation, per DS1 Circuit			CLO	PE1B1		52.00									
	Physical Collocation - Virtual to Physical Collocation Relocation, per DS3 Circuit			CLO	PE1B3		52.00									

COLLOCATION - South Carolina

Att: 4 Exh: B

CATEGORY	RATE ELEMENTS	Interim	Zone	BCS	USOC	RATES($) Rec	Nonrecurring First	Nonrecurring Add'l	Nonrecurring Disconnect First	Nonrecurring Disconnect Add'l	Svc Order Submitted Elec per LSR	Svc Order Submitted Manually per LSR	Incremental Charge - Manual Svc Order vs. Electronic- 1st	Incremental Charge - Manual Svc Order vs. Electronic- Add'l	Incremental Charge - Manual Svc Order vs. Electronic- Disc 1st	Incremental Charge - Manual Svc Order vs. Electronic- Disc Add'l
											OSS Rates($)					
							First	Add'l	First	Add'l	SOMEC	SOMAN	SOMAN	SOMAN	SOMAN	SOMAN
	Physical Collocation - Virtual to Physical Collocation In-Place, Per Voice Grade Circuit			CLO	PE1BR		22.43									
	Physical Collocation Virtual to Physical Collocation In-Place, Per DSO Circuit			CLO	PE1BP		22.43									
	Physical Collocation - Virtual to Physical Collocation In-Place, Per DS1 Circuit			CLO	PE1BS		32.61									
	Physical Collocation - Virtual to Physical Collocation In-Place, per DS3 Circuit			CLO	PE1BE		32.61									
Entrance Cable																
	Physical Collocation - Fiber Cable Installation, Pricing, non-recurring charge, per Entrance Cable			CLO	PE1BD		794.22		22.54							
	Physical Collocation - Fiber Cable Support Structure, per Entrance Cable			CLO	PE1PM	21.33										
	Physical Collocation - Fiber Entrance Cable Installation, per Fiber			CLO	PE1ED		3.87									
VIRTUAL COLLOCATION																
Application																
	Virtual Collocation - Application Fee			AMTFS	EAF		1,207.95		0.51							
	Virtual Collocation - Co-Carrier Cross Connects/Direct Connect, Application Fee, per application			AMTFS	VE1CA		584.42									
	Virtual Collocation Administrative Only - Application Fee			AMTFS	VE1AF		743.66									
Space Preparation																
	Virtual Collocation - Floor Space, per sq. ft.			AMTFS	ESPVX	3.95										
Power																
	Virtual Collocation - Power, per fused amp			AMTFS	ESPAX	9.19										
Cross Connects (Cross Connects, Co-Carrier Cross Connects, and Ports)																
	Virtual Collocation - 2-wire cross-connect, loop, provisioning			UEANL, UEA, UDN, UAL, UHL, UCL, UEQ, UNCVX, UNCDX, UNCNX	UEAC2	0.0317	12.32	11.83	6.04	5.45						
	Virtual Collocation - 4-wire cross-connect, loop, provisioning			UEA, UHL, UCL, UDL, UNCVX, UNCDX	UEAC4	0.0634	12.42	11.90	6.40	5.74						
	Virtual collocation - Special Access & UNE,cross-connect per DS1			ULR, UXTD1, UNC1X, ULDD1, U1TD1, USLEL, UNLD1, USL, UEPEX, UEPDX	CNC1X	1.12	22.08	15.96	6.42	5.80						
	Virtual collocation - Special Access & UNE, cross-connect per DS3			USL, UE3, U1TD3, UXTS1, UXTD3, UNC3X, UNCSX, ULDD3, U1TS1, ULDS1, UDLSX, UNLD3, XDEST	CND3X	14.21	20.94	15.23	7.39	5.93						
	Virtual Collocation - 2-Fiber Cross Connects			UDL12, UDLO3, U1T48, U1T12, U1TO3, ULDO3, ULD12, ULD48, UDF	CNC2F	2.86	20.94	15.23	7.40	5.93						
	Virtual Collocation - 4-Fiber Cross Connects			UDL12, UDLO3, U1T48, U1T12, U1TO3, ULDO3, ULD12, ULD48, UDF	CNC4F	5.71	25.61	19.90	9.73	8.26						
	Virtual Collocation - Co-Carrier Cross Connects/Direct Connect - Fiber Cable Support Structure, per linear foot, per cable			AMTFS	VE1CB	0.001										
	Virtual Collocation - Co-Carrier Cross Connects/Direct Connect - Copper/Coax Cable Support Structure, per linear foot, per cable			AMTFS	VE1CD	0.0015										
	Virtual Collocation 2-Wire Cross Connect, Port			UEPSX, UEPSB, UEPSE, UEPSP, UEPSR, UEP2C	VE1R2	0.0317	12.32	11.83	6.04	5.45						
	Virtual Collocation 4-Wire Cross Connect, Port			UEPDD, UEPEX	VE1R4	0.0634	12.42	11.90	6.40	5.74						

COLLOCATION - South Carolina														Att: 4 Exh: B			
CATEGORY	RATE ELEMENTS	Interim	Zone	BCS	USOC	RATES($)					Svc Order Submitted Elec per LSR	Svc Order Submitted Manually per LSR	Incremental Charge - Manual Svc Order vs. Electronic-1st	Incremental Charge - Manual Svc Order vs. Electronic-Add'l	Incremental Charge - Manual Svc Order vs. Electronic-Disc 1st	Incremental Charge - Manual Svc Order vs. Electronic-Disc Add'l
						Rec	Nonrecurring		Nonrecurring Disconnect		OSS Rates($)					
							First	Add'l	First	Add'l	SOMEC	SOMAN	SOMAN	SOMAN	SOMAN	SOMAN
CFA																
	Virtual Collocation - CFA Information Resend Request, per Premises, per Arrangement, per request			AMTFS	VE1QR		77.71									
Cable Records - Note: The rates in the First & Additional columns will actually be billed as "Initial I" & "Subsequent S" respectively																
	Virtual Collocation Cable Records - per request			AMTFS	VE1BA		I 760.98	S 489.20	133.29							
	Virtual Collocation Cable Records - VG/DS0 Cable, per cable record			AMTFS	VE1BB		327.65		189.54							
	Virtual Collocation Cable Records - VG/DS0 Cable, per each 100 pair			AMTFS	VE1BC		4.82		5.91							
	Virtual Collocation Cable Records - DS1, per T1TIE			AMTFS	VE1BD		2.26		2.77							
	Virtual Collocation Cable Records - DS3, per T3TIE			AMTFS	VE1BE		7.90		9.68							
	Virtual Collocation Cable Records - Fiber Cable, per 99 fiber records			AMTFS	VE1BF		84.68		77.30							
	Virtual Collocation Cable Records - CAT 5/RJ45			AMTFS	VE1B5		2.26		2.77							
Security																
	Virtual collocation - Security escort, basic time, normally scheduled work hours			AMTFS	SPTBX		16.96	10.75								
	Virtual collocation - Security escort, overtime, outside of normally scheduled work hours on a normal working day			AMTFS	SPTOX		22.10	13.89								
	Virtual collocation - Security escort, premium time, outside of a scheduled work day			AMTFS	SPTPX		27.23	17.02								
Maintenance																
	Virtual collocation - Maintenance in CO - Basic, per half hour			AMTFS	CTRLX		27.99	10.75								
	Virtual collocation - Maintenance in CO - Overtime, per half hour			AMTFS	SPTOM		36.56	13.89								
	Virtual collocation - Maintenance in CO - Premium per half hour			AMTFS	SPTPM		45.12	17.02								
Entrance Cable																
	Virtual Collocation - Cable Installation Charge, per cable			AMTFS	ESPCX		794.22		22.54							
	Virtual Collocation - Cable Support Structure, per cable			AMTFS	ESPSX	18.66										
COLLOCATION IN THE REMOTE SITE																
Physical Remote Site Collocation																
	Physical Collocation in the Remote Site - Application Fee			CLORS	PE1RA		308.38		168.60							
	Cabinet Space in the Remote Site per Bay/ Rack			CLORS	PE1RB	246.44										
	Physical Collocation in the Remote Site - Security Access - Key			CLORS	PE1RD		13.13									
	Physical Collocation in the Remote Site - Space Availability Report per Premises Requested			CLORS	PE1SR		116.13									
	Physical Collocation in the Remote Site - Remote Site CLLI Code Request, per CLLI Code Requested			CLORS	PE1RE		37.64									
	Remote Site DLEC Data (BRSDD), per Compact Disk, per CO			CLORS	PE1RR		234.50									
	Physical Collocation - Security Escort for Basic Time - normally scheduled work, per half hour			CLORS	PE1BT		16.96	10.75								
	Physical Collocation - Security Escort for Overtime - outside of normally scheduled working hours on a scheduled work day, per half hour			CLORS	PE1OT		22.10	13.89								
	Physical Collocation - Security Escort for Premium Time - outside of scheduled work day, per half hour			CLORS	PE1PT		27.23	17.02								
Adjacent Remote Site Collocation																
	Remote Site-Adjacent Collocation-Application Fee			CLORS	PE1RU		755.62	755.62								
	Remote Site-Adjacent Collocation - Real Estate, per square foot			CLORS	PE1RT	0.134										
	Remote Site-Adjacent Collocation - AC Power, per breaker amp			CLORS	PE1RS	6.27										
NOTE: If Security Escort and/or Add'l Engineering Fees become necessary for adjacent remote site collocation, the Parties will negotiate appropriate rates.																
Virtual Remote Site Collocation																
	Virtual Collocation in the Remote Site - Application Fee			VE1RS	VE1RB		616.76		337.19							
	Virtual Collocation in the Remote Site - Per Bay/Rack of Space			VE1RS	VE1RC	246.44										
	Virtual Collocation in the Remote Site - Space Availability Report per Premises requested			VE1RS	VE1RR		232.25									
	Virtual Collocation in the Remote Site - Remote Site CLLI Code Request, per CLLI Code Requested			VE1RS	VE1RL		75.27									
ADJACENT COLLOCATION																

COLLOCATION - South Carolina																	Att: 4 Exh: B
CATEGORY		RATE ELEMENTS	Interim	Zone	BCS	USOC	RATES($)					Svc Order Submitted Elec per LSR	Svc Order Submitted Manually per LSR	Incremental Charge - Manual Svc Order vs. Electronic-1st	Incremental Charge - Manual Svc Order vs. Electronic-Add'l	Incremental Charge - Manual Svc Order vs. Electronic-Disc 1st	Incremental Charge - Manual Svc Order vs. Electronic-Disc Add'l
							Rec	Nonrecurring		Nonrecurring Disconnect		OSS Rates($)					
								First	Add'l	First	Add'l	SOMEC	SOMAN	SOMAN	SOMAN	SOMAN	SOMAN
		Adjacent Collocation - Space Charge per Sq. Ft.			CLOAC	PE1JA	0.0939										
		Adjacent Collocation - Electrical Facility Charge per Linear Ft.			CLOAC	PE1JC	6.40										
		Adjacent Collocation - 2-Wire Cross-Connects			UEANL,UEQ,UEA,UCL, UAL, UHL, UDN	PE1JE	0.0264	12.32	11.83	6.04	5.45						
		Adjacent Collocation - 4-Wire Cross-Connects			UEA,UHL,UDL,UCL	PE1JF	0.0527	12.42	11.90	6.40	5.74						
		Adjacent Collocation - DS1 Cross-Connects			USL	PE1JG	1.03	22.08	15.96	6.42	5.80						
		Adjacent Collocation - DS3 Cross-Connects			UE3	PE1JH	14.00	20.94	15.23	7.39	5.93						
		Adjacent Collocation - 2-Fiber Cross-Connect			CLOAC	PE1JJ	2.37	20.94	15.23	7.40	5.93						
		Adjacent Collocation - 4-Fiber Cross-Connect			CLOAC	PE1JK	4.53	25.61	19.90	9.73	8.26						
		Adjacent Collocation - Application Fee			CLOAC	PE1JB		1,580.20									
		Adjacent Collocation - 120V, Single Phase Standby Power Rate per AC Breaker Amp			CLOAC	PE1JL	5.67										
		Adjacent Collocation - 240V, Single Phase Standby Power Rate per AC Breaker Amp			CLOAC	PE1JM	11.36										
		Adjacent Collocation - 120V, Three Phase Standby Power Rate per AC Breaker Amp			CLOAC	PE1JN	17.03										
		Adjacent Collocation - 277V, Three Phase Standby Power Rate per AC Breaker Amp			CLOAC	PE1JO	39.33										

Attachment 4

Remote Site Collocation

REMOTE SITE COLLOCATION
TABLE OF CONTENTS

1. Scope of Attachment
- **1.1 Scope**
- **1.2 Right to Occupy**
- **1.3. Space Reservation**
- **1.4. Third Party Property**
- **1.5 Space Reclamation**
- **1.6 Use of Space**
- **1.7 Due Dates**
- **1.8 Compliance**

2. Space Availability Optional Report
- **2.1 Space Availability Optional Report**
- **2.2 Remote Terminal Information**

3. Collocation Options
- **3.1 Cageless Collocation**
- **3.2 Caged Collocation**
- **3.3 Shared Caged Collocation**
- **3.4 Adjacent Collocation**
- **3.5 Co-Carrier Cross Connects (CCXCs)**

4. Occupancy
- **4.1. Space Ready Date**
- **4.2 Acceptance Walk Through**
- **4.3 Early Space Acceptance**
- **4.4 Termination of Occupancy**

5. Use of Remote Collocation Space
- **5.1. Equipment Type**
- **5.2. No Marketing**
- **5.3. Equipment Identification**
- **5.4. Entrance Facilities**
- **5.5 Shared Use**
- **5.6 Demarcation Point**
- **5.7 Equipment and Facilities**
- **5.8 AT&T Access**
- **5.9 Customer Access**
- **5.10 Lost or Stolen Access Keys**
- **5.11 Interference or Impairment**
- **5.12 Personalty and Its Removal**
- **5.13 Alterations**
- **5.14 Upkeep of Remote Collocation Space**

6. Ordering and Preparation of Remote Collocation Space
- **6.1. Procedures and Intervals**
- **6.2. Remote Site Application**
- **6.3 Availability of Space**
- **6.4 Space Availability Notification**
- **6.5 Denial of Application**
- **6.6 Petition for Waiver**
- **6.7 Waiting List**
- **6.8 Public Notification**
- **6.9 Application Response**
- **6.10 Application Modifications**
- **6.11 Bona Fide Firm Order**

7. Construction and Provisioning
- **7.1 Construction and Provisioning Intervals**
- **7.2. Joint Planning**
- **7.3. Permits**
- **7.4 Use of a AT&T Certified Supplier**
- **7.5 Alarms and Monitoring**
- **7.6 Virtual to Physical Remote Collocation Space Relocation**
- **7.7 Virtual to Physical Conversion (In-Place)**
- **7.8 Cancellation**
- **7.9 Licenses**
- **7.10 Environmental Compliance**

8. Rates and Charges
- **8.1. Rates**
- **8.2 Recurring Charges**
- **8.3 Application Fee**
- **8.4 Bay Space**
- **8.5 Power**
- **8.6 Adjacent Collocation Power**
- **8.7 Security Escort**
- **8.8 Other**

9. Insurance

10. Mechanics Liens

11. Inspections

12. Security and Safety Requirements

13. Destruction of Remote Collocation Space

14. Eminent Domain

15. Nonexclusivity

EXHIBIT A ENVIRONMENTAL AND SAFETY PRINCIPLES

EXHIBIT B RATES

AT&T

REMOTE SITE COLLOCATION

1. Scope of Attachment

1.1 Scope. The rates, terms, and conditions contained within this Attachment shall only apply when TWTC is occupying the collocation space as a sole occupant or as a Host within a Remote Site Location ("Remote Collocation Space") pursuant to this Attachment. AT&T Premises include AT&T Central Offices and Serving Wire Centers (hereinafter "AT&T Premises"). This Attachment is applicable to AT&T Premises owned or leased by AT&T. However, if the AT&T Premises occupied by AT&T is leased by AT&T from a third party, special considerations and intervals may apply in addition to the terms and conditions contained in this Attachment.

1.2 Right to occupy. AT&T shall offer to TWTC Remote Collocation Space on rates, terms, and conditions that are just, reasonable, non-discriminatory, and consistent with the rules of the Federal Communications Commission ("FCC"). Subject to the rates, terms, and conditions of this Attachment, where space is available and collocation is technically feasible, AT&T will allow TWTC to occupy that certain area designated by AT&T within a AT&T Remote Site Location, or on AT&T property upon which the AT&T Remote Site Location is located, of a size, which is specified by TWTC and agreed to by AT&T. AT&T Remote Site Locations include cabinets, huts, and controlled environmental vaults owned or leased by AT&T that house AT&T Network Facilities. To the extent this Attachment does not include all the necessary rates, terms and conditions for AT&T Remote Site Locations other than cabinets, huts and controlled environmental vaults, the Parties will negotiate said rates, terms, and conditions upon request for collocation at AT&T Remote Site Locations other than those specified above.

1.3 Space Reservation.

1.3.1 In all states other than Florida, the number of bays specified by TWTC may contemplate a request for space sufficient to accommodate TWTC's growth within a two-year period.

1.3.2 In the state of Florida, the number of bays specified by TWTC may contemplate a request for space sufficient to accommodate TWTC's growth within an eighteen (18) month period.

1.3.3 Neither AT&T nor any of AT&T's affiliates may reserve space for future use on more preferential terms than those set forth above.

1.4 Third Party Property. If the Premises, or the property on which it is located, is leased by AT&T from a Third Party or otherwise controlled by a Third Party, special considerations and intervals may apply in addition to the terms and conditions of this Attachment. Additionally, where AT&T notifies TWTC that AT&T's agreement with a Third Party does not grant AT&T the ability to provide access and use rights to others, upon TWTC's request, AT&T will use its best efforts to obtain the owner's consent and to otherwise secure such rights for TWTC. TWTC agrees to reimburse AT&T for the reasonable and demonstrable costs incurred by AT&T in obtaining such rights for TWTC. In cases where a Third Party agreement does not grant AT&T the right to provide access and use rights to others as contemplated by this Attachment and AT&T, despite its best efforts, is unable to secure such access and use rights for TWTC as above, TWTC shall be responsible for obtaining such permission to access and use such property. AT&T shall cooperate with TWTC in obtaining such permission.

1.5 Space Reclamation. In the event of space exhaust within a Remote Site Location, AT&T may include in its documentation for the Petition for Waiver filing any unutilized space in the Remote Site Location. TWTC will be responsible for any justification of unutilized space within its Remote Collocation Space, if the Commission requires such justification.

1.6 Use of Space. TWTC shall use the Remote Collocation Space for the purposes of installing, maintaining and operating TWTC's equipment (which may include testing and monitoring equipment) necessary for interconnection with AT&T services and facilities or for accessing AT&T unbundled network elements (UNEs) in accordance with the Act and FCC and Commission rules. The Remote Collocation Space may be used for no other purposes except as specifically described herein or in any amendment hereto.

1.7 Due Dates. If any due date contained in this Attachment falls on a weekend or National holiday, then the due date will be the next business day thereafter. For intervals of ten (10) days or less National holidays will be excluded. . For purposes of this Attachment, national holidays include the following: New Year's Day, Martin Luther King, Jr. Day, President's Day (Washington's Birthday), Memorial Day, Independence Day, Labor Day, Columbus Day, Veteran's Day, Thanksgiving Day, and Christmas Day.

1.8 Compliance. Subject to Section 24 of the General Terms and Conditions of this Agreement, the Parties agree to comply with all applicable federal, state, county, local and administrative laws, rules, ordinances, regulations and codes in the performance of their obligations hereunder.

2. Space Availability Optional Report

2.1 Space Availability Optional Report. Upon request from TWTC, AT&T will provide a written report ("Space Availability Report"), describing in detail the space that is available for collocation and specifying the amount of Remote Collocation Space available at the Remote Site Location requested, the number of collocators present at the Remote Site Location, any modifications in the use of the space since the last report on the Remote Site Location requested and the measures AT&T is taking to make additional space available for collocation arrangements. A Space Availability Report does not reserve space at the Remote Site Location.

2.1.1 The request from TWTC for a Space Availability Report must be written and must include the Common Language Location Identification ("CLLI") code for both the Remote Site Location and the serving wire center. The CLLI code information for the serving wire center is located in the National Exchange Carrier Association (NECA) Tariff FCC No. 4. If TWTC is unable to obtain the CLLI code for the Remote Site Location from, for example, a site visit to the remote site, TWTC may request the CLLI code from AT&T. To obtain a CLLI code for a Remote Site Location directly from AT&T, TWTC should submit to AT&T a Remote Site Interconnection Request for the serving wire center CLLI code prior to submitting its request for a Space Availability Report. TWTC should complete all the requested information and submit the Request to AT&T. AT&T will bill the applicable fee upon receipt of the request.

2.1.2 AT&T will respond to a request for a Space Availability Report for a particular Remote Site Location within ten (10) days of receipt of such request. AT&T will make commercially reasonable efforts to respond in ten (10) days to such a request when the request includes from two (2) to five (5) Remote Site Locations within the same state. The response time for requests of more than five (5) Remote Site Locations shall be negotiated between the Parties. If AT&T cannot meet the ten (10) day response time, AT&T shall notify TWTC and inform TWTC of the time frame under which it can respond.

2.2 Remote Terminal Information. Upon request, AT&T will provide TWTC with the following information concerning AT&T's remote terminals: (i) the address of the remote terminal; (ii) the CLLI code of the remote terminal; (iii) the carrier serving area of the remote terminal; (iv) the designation of which remote terminals subtend a particular central office; and (v) the number and address of customers that are served by a particular remote terminal.

2.2.1 AT&T will provide this information on a first come, first served basis within thirty (30) days of a TWTC request subject to the following conditions: (i) the information will only be provided on a CD in the same format in which it appears in AT&T's systems; (ii) the information will only be provided for each serving wire center designated by TWTC, up to a maximum of thirty (30) wire centers per TWTC request per month per state, and up to for a maximum of one hundred twenty (120) wire

centers total per month per state for all CLECs; and (iii) TWTC agrees to pay the costs incurred by AT&T in providing the information. Multiple Wire Center CLLI code requests may be place on one CD.

3. Collocation Options

3.1 Cageless Collocation. AT&T shall allow TWTC to collocate TWTC's equipment and facilities without requiring the construction of a cage or similar structure. AT&T shall allow TWTC to have direct access to TWTC's equipment and facilities in accordance with Section 5.8. AT&T shall make cageless collocation available in single bay increments. Except where TWTC's equipment requires special technical considerations (e.g., special cable racking or isolated ground plane), AT&T shall assign cageless Remote Collocation Space in conventional equipment rack lineups where feasible. For equipment requiring special technical considerations, TWTC must provide the equipment layout, including spatial dimensions for such equipment pursuant to generic requirements contained in Telcordia GR-63-Core, and shall be responsible for compliance with all special technical requirements associated with such equipment pursuant to Section 7.4 following.

3.2 Caged Collocation. At TWTC's option and expense, TWTC may arrange with a Supplier certified by AT&T ("AT&T Certified Supplier") to construct a collocation arrangement enclosure, where technically feasible as that term has been defined by the FCC, in accordance with AT&T's specifications for a wire mesh enclosure prior to starting equipment installation. Where local building codes require enclosure specifications more stringent than AT&T's wire mesh enclosure specifications, TWTC and TWTC's AT&T Certified Supplier must comply with the more stringent local building code requirements. TWTC's AT&T Certified Supplier shall be responsible for filing and obtaining any and all necessary permits and/or licenses for such construction. AT&T or AT&T's designated agent or contractor shall provide, at TWTC's expense, documentation, which may include existing building architectural drawings, enclosure drawings, and specifications etc., necessary for TWTC's AT&T Certified Supplier to obtain the zoning, permits and/or other licenses. TWTC's AT&T Certified Supplier shall bill TWTC directly for all work performed for TWTC pursuant to this Attachment and AT&T shall have no liability for nor responsibility to pay such charges imposed by TWTC's AT&T Certified Supplier. TWTC must provide the local AT&T Remote Site Location contact with two Access Keys used to enter the locked enclosure. Except in case of emergency, AT&T will not access TWTC's locked enclosure prior to notifying TWTC at least forty-eight (48) hours or two (2) business days, whichever is greater, before access to TWTC's Remote Site Location is required. Upon request, AT&T shall construct the enclosure for TWTC.

3.2.1 AT&T may elect to review TWTC's plans and specifications, if TWTC has indicated its desire to have TWTC's AT&T Certified Supplier construct the collocation arrangement enclosure, prior to allowing the construction to start, to ensure TWTC's compliance with AT&T's wire mesh enclosure specifications. AT&T will notify TWTC of its desire to execute this review in AT&T's Application Response to

TWTC's application. The Application Response is defined for purposes of this Attachment as AT&T's written response that includes sufficient information for TWTC to place a firm order for the Remote Collocation Space it is requesting. If TWTC's application does not indicate their desire to construct their own enclosure and TWTC subsequently decides to construct its own enclosure prior to AT&T's Application Response, then TWTC will resubmit its application, indicating its desire to construct its own enclosure. AT&T shall complete its review within fifteen (15) days after AT&T's receipt of TWTC's plans and specifications. Regardless of whether or not AT&T elects to review TWTC's plans and specifications, AT&T reserves the right to inspect the enclosure after construction to make sure it is constructed according to the submitted plans and specifications and/or AT&T's wire mesh enclosure specifications, as applicable. If AT&T decides to inspect the constructed Remote Collocation Space, AT&T will complete its inspection within fifteen (15) days after receipt of TWTC's written notification that the enclosure has been completed. AT&T shall require TWTC, at TWTC's expense, to remove or correct within seven (7) days after AT&T has completed its inspection of TWTC's caged Remote Collocation Space, any structure that does not meet TWTC's plans and specifications or AT&T's wire mesh enclosure specifications, as applicable.

3.3 Shared Caged Collocation. TWTC may allow other telecommunications carriers to sublease TWTC's Remote Collocation Space pursuant to terms and conditions agreed to by TWTC ("Host") and other telecommunications carriers ("Guests") and pursuant to this Section, except where the AT&T Remote Site Location is located within a leased space and AT&T is prohibited by said lease from offering such an option or is located on property for which AT&T holds an easement and such easement does not permit such an option. TWTC shall notify AT&T in writing upon execution of any agreement between the Host and its Guest prior to any application. Further, such notice shall include the name of the Guest(s) and the term of the agreement, and shall contain a certification by TWTC that said agreement imposes upon the Guest(s) the same terms and conditions for Remote Collocation Space as set forth in this Attachment between AT&T and TWTC.

3.3.1 TWTC, as the Host, shall be the sole interface and responsible Party to AT&T for assessment of rates and charges contained within this Attachment and for the purposes of ensuring that the safety and security requirements of this Attachment are fully complied with by the Guest, its employees and agents. AT&T shall provide TWTC with a proration of the costs of the Remote Collocation Space based on the number of collocators and the space used by each. AT&T will not allocate less than one (1) bay per Host/Guest. In those instances where the Host permits a Guest to use a shelf within the Host's bay, AT&T will not prorate the cost of the bay. In all states other than Florida, and in addition to the foregoing, TWTC shall be the responsible Party to AT&T for the purpose of submitting applications for bay placement for the Guest. In Florida the Guest may submit its own initial bay placement applications using the Host's access carrier name abbreviation (ACNA). A separate Guest application shall require the assessment of an Application Fee, as set forth in Exhibit B, which will be

charged to the Host. AT&T shall bill this nonrecurring fee on the date that AT&T provides it written Application Response to the Guest(s) bona fide application.

3.3.2 Notwithstanding the foregoing, the Guest may arrange directly with AT&T for the provision of the interconnecting facilities between AT&T and the Guest and for the provision of the services, and/or access to UNEs. The bill for these interconnecting facilities, services and access to UNEs will be charged to the Guest pursuant to the applicable AT&T tariff or the Guest's Interconnection Agreement with AT&T.

3.3.3 TWTC shall indemnify and hold harmless AT&T from any and all claims, actions, causes of action, of whatever kind or nature arising out of the presence of TWTC's Guest(s) in the Remote Collocation Space except to the extent caused by AT&T's sole negligence, gross negligence, or willful misconduct.

3.4 Adjacent Collocation. Subject to technical feasibility and space availability, AT&T will permit an adjacent Remote Site collocation arrangement ("Adjacent Arrangement") on the property on which AT&T's Remote Site is located when space within the Remote Site Location is legitimately exhausted, where the Adjacent Arrangement does not interfere with access to existing or planned structures or facilities on the Remote Site Location property. The Adjacent Arrangement shall be constructed or procured by TWTC and in conformance with AT&T's design and construction specifications. Further, TWTC shall construct, procure, maintain and operate said Adjacent Arrangement pursuant to all of the terms and conditions set forth in this Attachment. Rates shall be negotiated at the time of the application for the Adjacent Arrangement.

3.4.1 Should TWTC elect Adjacent Collocation, TWTC must arrange with a AT&T Certified Supplier to construct or procure an Adjacent Arrangement structure in accordance with AT&T's specifications. Where local building codes require specifications more stringent than AT&T's own specifications, TWTC and TWTC's AT&T Certified Supplier must comply with local building code requirements. TWTC's AT&T Certified Supplier shall be responsible for filing and obtaining any and all necessary zoning, permits and/or licenses for such construction. TWTC's AT&T Certified Supplier shall bill TWTC directly for all work performed for TWTC pursuant to this Attachment and AT&T shall have no liability for nor responsibility to pay such charges imposed by TWTC's AT&T Certified Supplier. TWTC must provide the local AT&T Remote Site Location contact with two cards, keys or other access device used to enter the locked enclosure. Except in cases of emergency, AT&T shall not access TWTC's locked enclosure prior to notifying TWTC at least forty-eight (48) hours or two (2) business days, whichever is greater, before access to the locked enclosure is required.

3.4.2 TWTC must submit its plans and specifications to AT&T with its firm order. AT&T shall review TWTC's plans and specifications prior to construction of an Adjacent Arrangement to ensure compliance with AT&T's specifications. AT&T shall complete its review within fifteen (15) days after receipt of plans and specifications.

AT&T may inspect the Adjacent Arrangement during and after construction to confirm it is constructed according to the submitted plans and specifications. If AT&T decides to inspect the completed Adjacent Arrangement, AT&T will complete its inspection within fifteen (15) days after receipt of TWTC's written notification that the Adjacent Arrangement has been completed. AT&T shall require TWTC, at TWTC's expense, to remove or correct within seven (7) days after AT&T has completed its inspection of TWTC's Adjacent Arrangement, any structure that does not meet its submitted plans and specifications or, AT&T's specifications, as applicable.

3.4.3 TWTC shall provide a concrete pad, the structure housing the Adjacent Arrangement, HVAC, lighting, and all facilities that connect the structure (i.e. racking, conduits, etc.) to the AT&T point of demarcation. At TWTC's option, and where the local authority having jurisdiction permits, AT&T shall provide an AC power source and access to physical collocation services and facilities subject to the same nondiscriminatory requirements as applicable to any other physical collocation arrangement. In Alabama and Louisiana, at TWTC's request and expense, AT&T will provide DC power to an Adjacent Collocation site where technically feasible, as that term has been defined by the FCC, and in accordance with applicable law, AT&T will provide DC power in an Adjacent Arrangement provided that such provisioning can be done in compliance with the National Electric Code (NEC), any and all safety and local codes, such as, but not limited to, local zoning codes, and upon completion of negotiations between the Parties on the applicable rates and intervals. TWTC will pay for any and all (100%) DC power construction and provisioning costs to an Adjacent Arrangement through individual case basis (ICB) pricing that must be paid as follows: fifty percent (50%) before the DC installation work begins, and fifty percent (50%) at completion of the DC installation work to the Adjacent Arrangement. TWTC's AT&T Certified Supplier shall be responsible, at TWTC's expense, for filing and receiving any and all necessary zoning, permits and/or licenses for such arrangement. AT&T shall allow Shared caged Host/Guest collocation within an Adjacent Arrangement pursuant to the terms and conditions set forth herein.

3.5 Co-Carrier Cross-Connects (CCXCs). A Co-Carrier Cross Connect (CCXC) is a cross connection between TWTC and another collocated telecommunications carrier, other than AT&T, in the same AT&T Remote Site Location. Where technically feasible, AT&T will permit TWTC to interconnect between its Remote Collocation Space(s) and Remote Collocation Space(s) of another (or other) collocated telecommunications carrier(s) within the same AT&T Remote Site Location via a CCXC, pursuant to FCC Rules. The other collocated telecommunications carrier's agreement must also contain CCXC rates, terms and conditions before AT&T will permit the provisioning of CCXC between the two collocated carriers. The applicable AT&T charges will be assessed to the collocated telecommunications carrier that requests the CCXC. TWTC is prohibited from using the Remote Collocation Space for the sole or primary purpose of cross-connecting to other collocated telecommunications carriers.

3.5.1 TWTC must contract with a AT&T Certified Supplier to place the CCXC. The CCXC shall be provisioned using facilities owned by TWTC. Such cross-connections to other collocated telecommunications carriers may be made using either optical or electrical facilities. TWTC shall be responsible for providing a letter of authorization (LOA), with the application, to AT&T from the other collocated telecommunications carrier to which it will be cross-connecting. The CCXC shall utilize AT&T common cable support structure. . There will be a recurring charge per linear foot, per cable, of the common cable support structure used by TWTC to provision the CCXC to the other collocated telecommunications carrier. In those instances where TWTC's equipment and the equipment of the other collocated telecommunications carrier are located in contiguous caged Remote Collocation Spaces, TWTC may use its own technicians to install the co-carrier cross connects using either electrical or optical facilities between the sets of equipment of both collocated telecommunications carriers by constructing a dedicated cable support structure between the two contiguous cages. TWTC shall deploy such optical or electrical cross-connections directly between its own equipment and the equipment of the other collocated telecommunications carrier without being routed through AT&T's equipment or, in the case of a CCXC provisioned between contiguous collocation spaces, common cable support structure. TWTC shall not provision CCXC on any AT&T distribution frame, POT (Point of Termination) Bay, DSX (Digital System Cross-connect) panel or LGX (Light Guide Cross-connect) panel. TWTC is solely responsible for ensuring the integrity of the signal.

3.5.2 To place an order for a CCXC, TWTC must submit an application to AT&T. If no modification to the Remote Collocation Space is requested other than the placement of a CCXC, the Co-Carrier Cross Connect Application Fee for a CCXC, as defined in Exhibit B, will apply. If other modifications are requested, in addition to the placement of a CCXC, the Application Fee will apply. AT&T will bill this nonrecurring charge on the date that it provides an Application Response to TWTC.

4. Occupancy

4.1 Space Ready Date. AT&T will notify TWTC in writing that the Remote Collocation Space is ready for occupancy ("Space Ready Date").

4.2 Acceptance Walk Through. TWTC will schedule and complete an acceptance walkthrough of each Remote Collocation Space with AT&T within fifteen (15) days after AT&T notifies TWTC that Remote Collocation Space is ready for occupancy ("Space Ready Date"). AT&T will correct any deviations to TWTC's original or jointly amended requirements within seven (7) days after the walkthrough, unless the Parties jointly agree upon a different time frame, and AT&T shall establish a new Space Ready Date. Another acceptance walkthrough will then be scheduled and conducted within fifteen (15) days after the new Space Ready Date. This follow-up acceptance walkthrough will be limited to those items identified in the initial walkthrough. If TWTC completes its acceptance walkthrough within the fifteen (15) day interval(s) associated with the applicable Space Ready Date, billing will begin

upon the date of TWTC's acceptance of the Remote Collocation Space ("Space Acceptance Date"). In the event that TWTC fails to complete an acceptance walkthrough within this fifteen (15) day interval, the Remote Collocation Space shall be deemed accepted by TWTC on the Space Ready Date and billing will commence from that date.

4.3 Early Space Acceptance. If TWTC decides to occupy the Remote Collocation Space prior to the Space Ready Date, the date TWTC occupies the space is deemed the Space Acceptance Date and billing will begin from that date. TWTC must notify AT&T in writing that its collocation equipment installation is complete. TWTC's collocation equipment installation is complete, which is when TWTC's equipment has been cross-connected to AT&T's network for the purpose of provisioning telecommunication services to TWTC's customers. AT&T may, at its discretion, refuse to accept any orders for cross-connects until it has received such notice from TWTC.

4.4 Termination of Occupancy. In addition to any other provisions addressing termination of occupancy in this Attachment, TWTC may terminate occupancy in a particular Remote Collocation Space by submitting an application requesting termination of occupancy for such Remote Collocation Space. Such termination shall be effective upon AT&T's acceptance of the Space Relinquishment Form. Billing for monthly recurring charges will cease on the date TWTC and AT&T conduct an inspection of the terminated space and jointly sign off on the Space Relinquishment Form or on the date that TWTC signs off on the Space Relinquishment Form and sends the form to AT&T if a subsequent inspection of the terminated space by AT&T reveals no discrepancies. If the subsequent inspection by AT&T reveals any discrepancies, billing will cease on the date that AT&T and TWTC jointly conduct an inspection, which confirms that TWTC has corrected the discrepancies. An Application Fee will not apply for termination of occupancy. AT&T may terminate TWTC's right to occupy the Remote Collocation Space in the event TWTC fails to comply with any provision of this Agreement, for such Remote Collocation Space..

4.4.1 Upon termination of occupancy, TWTC, at its sole expense, shall remove its equipment and other property from the Remote Collocation Space. TWTC shall have thirty (30) days from the BFFO date ("Termination Date") to complete such removal, including the removal of all equipment and facilities of TWTC's Guest(s), unless TWTC's Guest(s) has assumed responsibility for the Remote Collocation Space housing the Guest(s)'s equipment and executed the appropriate documentation required by AT&T to transfer the Remote Collocation Space to the Guest(s) prior to TWTC's Termination Date.

4.4.2 TWTC shall continue payment of all monthly recurring charges to AT&T until the date TWTC, and if applicable TWTC's Guest(s), has fully vacated the Remote Collocation Space and the Space Relinquish Form has been accepted by AT&T. If TWTC or TWTC's Guest(s) fails to vacate the Remote Collocation Space within

thirty (30) days from the Termination Date, AT&T shall have the right to remove and dispose of the equipment and any other property of TWTC or TWTC's Guest(s), in any manner that AT&T deems fit, at TWTC's expense and with no liability whatsoever for TWTC's property or TWTC's Guest(s)'s property.

4.4.3 Upon termination of TWTC's right to occupy Remote Collocation Space, the Remote Collocation Space will revert back to AT&T, and TWTC shall surrender such Remote Collocation Space to AT&T in the same condition as when it was first occupied by TWTC, with the exception of ordinary wear and tear, unless otherwise agreed to by the Parties. For CEVs and huts, TWTC's AT&T Certified Supplier shall be responsible for updating and making any necessary changes to AT&T's records as required by AT&T specifications including, but not limited to, Record Drawings and ERMA Records. TWTC shall be responsible for the cost of removing any TWTC constructed enclosure, as well as any support structures (e.g., racking, conduits, power cables, etc.), by the Termination Date and restoring the grounds to their original condition.

5. Use of Remote Collocation Space

5.1 Equipment Type. AT&T permits the collocation and use of any type of equipment that is necessary and will be used primarily for interconnection to AT&T's network or for access to UNEs in the provision of telecommunications services, as the term "necessary" is defined by FCC 47 C.F.R. Section 51.323 (b). Equipment is necessary for interconnection if an inability to deploy that equipment would, as a practical, economical, or operational matter, preclude the requesting carrier from obtaining interconnection with AT&T at a level equal in quality to that which AT&T obtains within its own network or what AT&T provides to any affiliate, subsidiary, or other party.

5.1.1 Examples of equipment that would not be considered necessary include but are not limited to: traditional circuit switching equipment, equipment used exclusively for call-related databases, computer servers used exclusively for providing information services, operations support system (OSS) equipment used to support collocated telecommunications carrier network operations, equipment that generates customer orders, manages trouble tickets or inventory, or stores customer records in centralized databases, etc. AT&T will determine upon receipt of an application if the requested equipment is necessary based on the criteria established by the FCC. Multifunctional equipment placed on AT&T's Premises must not place any greater relative burden on AT&T's property than comparable single-function equipment. AT&T reserves the right to permit collocation of any equipment on a nondiscriminatory basis.

5.1.2 Such equipment must, at a minimum, meet the following Telcordia Network Equipment Building Systems (NEBS) General Equipment Requirements: Criteria Level 3 requirements as outlined in the Telcordia Special Report SR-3580, Issue 1. Except where otherwise required by a Commission, AT&T shall comply with the

applicable FCC rules relating to denial of collocation equipment based on TWTC's failure to comply with this Section.

5.1.2.1 All TWTC equipment installation shall comply with AT&T TR 73503-11h, "Grounding - Engineering Procedures". Metallic cable sheaths and metallic strength members of optical fiber cables as well as the metallic cable sheaths of all copper conductor cables shall be bonded to the designated grounding bus for the Remote Site Location. All copper conductor pairs, working and non-working, shall be equipped with a solid-state protector unit (over-voltage protection only), which has been listed by a nationally recognized testing laboratory.

5.1.3 TWTC shall identify to AT&T whenever TWTC submits a Method of Procedure ("MOP") adding equipment to TWTC's Remote Collocation Space all UCC-1 lien holders or other entities that have a financial interest, secured or otherwise, in the equipment in TWTC's Remote Collocation Space. TWTC shall submit a copy of the list of any lien holders or other entities that have a financial interest to TWTC's ATCC Representative.

5.2 No Marketing. TWTC shall not use the Remote Collocation Space for marketing purposes nor shall it place any identifying signs or markings in the area surrounding the Remote Collocation Space or on the grounds of the Remote Site Location.

5.3 Equipment Identification. TWTC shall place a plaque or affix other identification (e.g., stenciling or labeling) to each piece of TWTC's equipment, including the appropriate emergency contacts with their corresponding telephone numbers, in order for AT&T to properly identify TWTC's equipment in the case of an emergency. For caged Remote Collocation Space, such identification must be placed on a plaque affixed to the outside of the caged enclosure.

5.4 Entrance Facilities. TWTC may elect to place TWTC-owned or TWTC-leased fiber entrance facilities into the Remote Collocation Space. AT&T will designate the point of interconnection at the Remote Site Location housing the Remote Collocation Space, which is physically accessible by both Parties. TWTC will provide and place copper cable through conduit from the Remote Collocation Space to the feeder distribution interface to the splice location of sufficient length for splicing by AT&T. TWTC must contact AT&T for authorization and instruction prior to placing any entrance facility cable. TWTC is responsible for maintenance of the entrance facilities that terminate into TWTC's Remote Collocation Space.

5.5 Shared Use. TWTC may utilize spare capacity on an existing telecommunications carrier's entrance facility for the purpose of obtaining an entrance facility to TWTC's Remote Collocation Space within the same AT&T Remote Site Location.

5.6 Demarcation Point. AT&T will designate the point(s) of demarcation between TWTC's equipment and/or network facilities and AT&T's network facilities. Each

Party will be responsible for maintenance and operation of all equipment/facilities on its side of the demarcation point. TWTC or its agent must perform all required maintenance to TWTC equipment/facilities on its side of the demarcation point, pursuant to Section 5.7, following.

5.7 Equipment and Facilities. TWTC, or if required by this Attachment, TWTC's AT&T Certified Supplier, is solely responsible for the design, engineering, installation, testing, provisioning, performance, monitoring, maintenance and repair of the equipment and network facilities used by TWTC which must be performed in compliance with all applicable AT&T specifications. Such equipment and network facilities may include but are not limited to cable(s), equipment, and point of termination connections. TWTC and its selected AT&T Certified Supplier must follow and comply with all AT&T specifications outlined in the following AT&TTechnical Requirements: TR 73503, TR 73519, TR 73572, and TR 73564.

5.8 AT&T Access. From time to time AT&T may require access to the Remote Collocation Space. AT&T retains the right to access the Remote Collocation Space for the purpose of making AT&T equipment and Remote Site Location modifications. Except in case of emergency, AT&T will give notice to TWTC at least forty-eight (48) hours before access to the Remote Collocation Space is required. TWTC may elect to be present whenever AT&T performs work in the Remote Collocation Space. The Parties agree that TWTC will not bear any of the expense associated with this work. In the case of an emergency, AT&T will provide oral notice of entry as soon as possible and, upon request, will provide subsequent written notice.

5.9 Customer Access. Pursuant to Section 12, TWTC shall have access to its Remote Collocation Space twenty-four (24) hours a day, seven (7) days a week. TWTC agrees to provide the name and social security number, date of birth, or driver's license number of each employee, supplier, or agent of TWTC or TWTC's Guest(s) with TWTC's written request for access keys or cards (Access Devices) for specific AT&T Premises, prior to the issuance of said Access Devices, using Form RF-2906-C, the "CLEC and CLEC Certified Supplier Access Request and Acknowledgement" form. The appropriate key acknowledgement forms (the "Collocation Acknowledgement Sheet" for access cards and the "Key Acknowledgement Form" for keys) must be signed by TWTC and returned to AT&T Access Management within fifteen (15) days of TWTC's receipt of these forms. Failure to return these properly acknowledged forms will result in the subsequent access key or card requests being held by AT&T until the proper acknowledgement documents have been received by AT&T and reflect current information. Access Devices may not be duplicated under any circumstances. TWTC agrees to be responsible for all Access Devices and for the return of all Access Devices in the possession of TWTC's employees, suppliers, agents, or Guests after termination of the employment relationship, the contractual obligation with TWTC ends, upon the termination of this Agreement, or upon the termination of occupancy of Remote Collocation Space in a specific AT&T Premises. TWTC shall pay all applicable charges associated with lost or stolen Access Devices.

5.9.1 AT&T will permit one (1) accompanied site visit, which will be limited to no more than one hour, to TWTC's designated Remote Collocation Space, after receipt of the BFFO, without charge to TWTC. TWTC must submit to AT&T the completed Access Control Request Form for all employees, suppliers, agents or Guests requiring access to a AT&T Premises at least thirty (30) days prior to the date TWTC desires to gain access to the Remote Collocation Space. In order to permit reasonable access during construction of the Remote Collocation Space, TWTC may submit a request for its one (1) free accompanied site visit to its designated Remote Collocation Space at any time subsequent to AT&T's receipt of the BFFO. In the event TWTC desires access to its designated Remote Collocation Space after the first accompanied free visit and TWTC's access request form(s) has not been approved by AT&T or TWTC has not yet submitted an access request form to AT&T, TWTC shall be permitted to access the Remote Collocation Space accompanied by a AT&T security escort, at TWTC's expense, which will be assessed pursuant to the Security Escort fees contained in Exhibit B. TWTC must request that escorted access be provided by AT&T to TWTC's designated Remote Collocation Space at least three (3) business days prior to the date such access is desired. A AT&T security escort will be required whenever TWTC or its approved agent or supplier requires access to the entrance manhole.

5.10 Lost or Stolen Access Keys. TWTC shall notify AT&T in writing immediately in the case of lost or stolen Access Keys. Should it become necessary for AT&T to re-key Remote Site Locations or deactivate a card as a result of a lost Access Key(s) or for failure to return an Access Key(s), TWTC shall pay for all reasonable costs associated with the re-keying or deactivating the device(s).

5.11 Interference or Impairment. Notwithstanding any other provisions of this Attachment, TWTC shall not use any product or service provided under this Agreement, any other service related thereto or used in combination therewith, or place or use any equipment and facilities in any manner that 1) significantly degrades, interferes with or impairs service provided by AT&T or by any other entity or any person's use of its telecommunications service; 2) endangers or damages the equipment, facilities or other property of AT&T or of any other entity or person; 3) compromises the privacy of any communications routed through the Remote Site; or 4) creates an unreasonable risk of injury or death to any individual or to the public. If AT&T reasonably determines that any equipment or facilities of TWTC violates the provisions of this paragraph, AT&T shall provide written notice to TWTC, which shall direct TWTC to cure the violation within forty-eight (48) hours of TWTC's receipt of written notice or, if such cure is not feasible, at a minimum, to commence curative measures within twenty-four (24) hours and exercise reasonable diligence to complete such measures as soon as possible thereafter. After receipt of the notice, the Parties agree to consult immediately and, if necessary, to conduct the inspection of the Remote Collocation Space.

5.11.1 Except in the case of the deployment of an advanced service which significantly degrades the performance of other advanced services or traditional voice band services, if TWTC fails to take cure the violation within forty-eight (48) hours or, if such cure is not possible, to commence curative action within twenty-four (24) hours and exercise reasonable diligence to complete such action as soon as possible, or if the violation is of a character which poses an immediate and substantial threat of damage to property or injury or death to any person, or any other significant degradation, interference or impairment of AT&T's or another entity's service, then and only in that event, AT&T may take such action as it deems necessary to eliminate such threat including, without limitation, the interruption of electrical power to TWTC's equipment and/or facilities. AT&T will endeavor, but is not required, to provide notice to TWTC prior to the taking of such action and AT&T shall have no liability to TWTC for any damages arising from such action, except to the extent that such action by AT&T constitutes willful misconduct.

5.11.2 For purposes of this Section, the term "significantly degrades" shall be defined as an action that noticeably impairs a service from a user's perspective. In the case of the deployment of an advanced service which significantly degrades the performance of other advanced services or traditional voice band services and TWTC fails to take curative action within forty-eight (48) hours, or such cure is not possible, to commence curative action within twenty-four (24) hours and exercise reasonable diligence to complete such action as soon as possible, AT&T will establish before the appropriate Commission that the technology deployed is causing the significant degradation. Any claims of network harm presented to TWTC or, if subsequently necessary, the Commission must be provided by AT&T with specific and verifiable information. Where AT&T demonstrates that a certain technology deployed by TWTC is significantly degrading the performance of other advanced services or traditional voice band services, TWTC shall discontinue deployment of that technology and migrate its customers to other technologies that will not significantly degrade the performance of such services. Where the only degraded service itself is a known disturber, and the newly deployed technology satisfies at least one of the criteria for a presumption that it is acceptable for deployment, pursuant to 47CFR, Section 51.230 of the FCC's Rules, the degraded service shall not prevail against the newly-deployed technology.

5.12 Personalty and Its Removal. Facilities and equipment placed by TWTC in the Remote Collocation Space shall not become a part of the Remote Site Location, even if nailed, screwed or otherwise fastened to the Remote Collocation Space but shall retain their status as personal property and may be removed by TWTC at any time. Any damage caused to the Remote Collocation Space by TWTC's employees, suppliers, agents or Guests during the installation or removal of such property shall be promptly repaired by TWTC at its sole expense.

5.13 Alterations. Under no condition shall TWTC or any person acting on behalf of TWTC make any rearrangement, modification, augment, improvement, addition, and/or other

alteration which could affect in any way space, power, HVAC, and/or safety considerations to the Remote Collocation Space or the AT&T Remote Site Location, hereinafter referred to individually or collectively as "Alterations", without the express written consent of AT&T, which shall not be unreasonably withheld. The cost of any such Alteration shall be paid by TWTC. An Alteration shall require the submission of an application and Application Fee. AT&T will bill the nonrecurring fee on the date that AT&T provides TWTC with an Application Response.

5.14 Upkeep of Remote Collocation Space. TWTC shall be responsible for the general upkeep and cleaning of the Remote Collocation Space. TWTC shall be responsible for removing any of TWTC's debris from the Remote Collocation Space and from in and around the Remote Site Location on each visit.

6. Ordering and Preparation of Remote Collocation Space

6.1 Procedures and Intervals. Should any state or federal regulatory agency impose procedures or intervals applicable to TWTC and AT&T that are different from procedures or intervals set forth in this Section, whether now in effect or that become effective after execution of this Attachment, those procedures or intervals shall supersede the requirements set forth herein for that jurisdiction for all applications submitted after the effective date thereof.

6.2 Remote Site Application. When TWTC or TWTC's Guest(s) desires to install a bay in a Remote Site Location, TWTC shall input a AT&T Physical Expanded Interconnection Application Document ("Application") directly into AT&T's electronic application (e.App) system for processing. The Application is considered Bona Fide when it is complete and accurate, meaning that all of the required fields on the Application are completed with the appropriate type of information. An Application Fee, as set forth in Exhibit B, will apply to each Application submitted by TWTC and will be billed on the date AT&T provides TWTC with an Application Response. The placement of an additional bay at a later date will be treated in the same fashion and an Application will be required. The installation of additional shelves/equipment, subject to the restrictions contained in Section 5.7, within an existing bay, does not require an Application.

6.3 Availability of Space. Upon submission of an Application, AT&T will permit TWTC to physically collocate, pursuant to the terms of this Attachment, at any AT&T Remote Site Location, unless AT&T has determined that there is no space available due to space limitations or that collocation at the Remote Site Location is not practical for technical reasons. In the event space is not immediately available at a Remote Site Location, AT&T reserves the right to make additional space available, in which case the conditions in Section 7 shall apply, or AT&T may elect to deny space in accordance with this Section, in which case, virtual or adjacent collocation options may be available. If the amount of space requested is not available, AT&T will notify TWTC of the amount that is available.

6.4 Space Availability Notification. For all states except Florida and Tennessee, AT&T will respond to an Application within ten (10) days as to whether space is available or not available within a AT&T Remote Site Location. . In Florida and Tennessee, AT&T will respond to an Application within fifteen (15) days as to whether space is available or not available within a AT&T Premises. AT&T's e.App system will reflect when TWTC's Application is Bona Fide. If the Application cannot be Bona Fide, AT&T will identify what revisions are necessary for the Application to become Bona Fide. If the amount of space requested is not available, AT&T will notify TWTC of the amount of space that is available and no Application fee will apply. When AT&T's response includes an amount of space less than that requested by TWTC or space that is configured differently, no Application Fee shall apply. If TWTC decides to accept the available space, TWTC must resubmit its Application to reflect the actual space available, including the configuration of the space, prior to submitting a BFFO. When TWTC resubmits its Application to accept the available space, AT&T will bill TWTC the appropriate Application Fee.

6.5 Denial of Application. If AT&T notifies TWTC that no space is available (Denial of Application), AT&T will not assess an Application Fee to TWTC. After notifying TWTC that AT&T has no available space in the requested Remote Site Location, AT&T will allow TWTC, upon request, to tour the Remote Site Location within ten (10) days of such Denial of Application. In order to schedule this tour within ten (10) days, AT&T must receive the request for the tour of the Remote Site Location within five (5) days of the Denial of Application.

6.6 Petition for Waiver. Upon Denial of Application, AT&T will timely file a petition with the appropriate Commission pursuant to 47 U.S.C. § 251(c)(6). AT&T shall provide to the Commission any information requested by that Commission. Such information shall include which space, if any, AT&T or any of AT&T's affiliates have reserved for future use and a detailed description of the specific future uses for which the space has been reserved. Subject to an appropriate nondisclosure agreement or provision, AT&T shall permit TWTC to inspect any plans or diagrams that AT&T provides to the Commission.

6.7 Waiting List. On a first-come, first-served basis, which is governed by the date of receipt of an application or Letter of Intent, AT&T will maintain a waiting list of requesting telecommunications carriers who have either received a Denial of Application or, where it is publicly known that a Remote Site Location is out of space, have submitted a Letter of Intent to collocate in that Remote Site Location. AT&T will notify the telecommunications carriers on the waiting list that can be accommodated by the amount of space that becomes available according to the position of the telecommunications carriers on said waiting list.

6.7.1 In Florida, on a first-come, first-served basis, which is governed by the date of receipt of an application or Letter of Intent, AT&T will maintain a waiting list of requesting telecommunications carriers that have either received a Denial of Application or,

where it is publicly known that a Remote Site Location is out of space, have submitted a Letter of Intent to collocate in that Remote Site Location. Sixty (60) days prior to Remote Collocation Space becoming available, if known, AT&T will notify the Commission and the telecommunications carriers on the waiting list by mail when space will become available. If AT&T does not know sixty (60) days in advance of when Remote Collocation Space will become available, AT&T will notify the Commission and the telecommunications carriers on the waiting list within two (2) business days of the determination that space will become available.

6.7.2 When Remote Collocation Space becomes available, TWTC must submit an updated, complete, and accurate Application to AT&T within thirty (30) days of such notification that Remote Collocation Space will be available in the requested Remote Site Location previously out of space. If TWTC has originally requested caged Remote Collocation Space and cageless Remote Collocation Space becomes available, TWTC may refuse such space and notify AT&T in writing, within the thirty (3) day timeframe referenced above, that TWTC wishes to maintain its place on the waiting list for caged Remote Collocation Space, without accepting the available cageless Remote Collocation Space. TWTC may accept an amount of space less than what it originally requested by submitting an Application as set forth above, and, upon request, may maintain its position on the waiting list for the remaining space that was initially requested. If TWTC does not submit an Application or notify AT&T in writing within the thirty (3) day timeframe as described above, AT&T will offer the available Remote Collocation Space to the next telecommunications carrier on the waiting list and remove TWTC from the waiting list. Upon request, AT&T will advise TWTC as to its position on the waiting list for a particular Remote Site Location.

6.8 Public Notification. AT&T will maintain on its Interconnection Services Web site, www.interconnection.bellsouth.com, a notification document that will indicate all Remote Site Locations that are without available space. AT&T shall update such document within ten (10) days of the date that AT&T becomes aware that there is insufficient space to accommodate collocation at the Remote Site Location. AT&T will also post a document on its Interconnection Services website that contains a general notice where space has become available in a Remote Site Location previously on the space exhaust list.

6.9 Application Response.

6.9.1 In Florida and Tennessee, within fifteen (15) days of receipt of a Bona Fide Application, when Remote Collocation Space has been determined to be available or when a lesser amount of space than that requested is available, then with respect to the Remote Collocation Space available, AT&T will provide an Application Response including sufficient information to enable TWTC to place a firm order. The Application Response will include, at a minimum, the configuration of the space, the Cable Installation Fee, the Cable Records Fee, and any other applicable space preparation fees, as described in Section 8. When TWTC submits ten (10) or more

Applications within ten (10) days, the initial fifteen (15) day response interval will increase by ten (10) days for every additional ten (10) Applications or fraction thereof.

6.9.2 In Alabama, Georgia, Kentucky, Louisiana, Mississippi, North Carolina, and South Carolina, when Remote Collocation Space has been determined to be available, AT&T will provide an Application Response within twenty (20) days of receipt of a Bona Fide Application. The Application Response will be a written response that includes sufficient information to enable TWTC to place a firm order, which, at a minimum, will include the configuration of the space, the Cable Installation Fee, the Cable Records Fee, and any other applicable space preparation fees, as described in Section 8.

6.10 Application Modifications. If a modification or revision is made to any information in the Bona Fide Application prior to a BFFO, with the exception of modifications to (1) Customer Information, (2) Contact Information or (3) Billing Contact Information, whether at the request of TWTC or as necessitated by technical considerations, the Application shall be considered a new Application and handled as a new Application with respect to the response and provisioning intervals. AT&T will charge TWTC the Application Fee as set forth in Exhibit B. AT&T will bill the nonrecurring fee on the date that AT&T provides an Application Response.

6.11 Bona Fide Firm Order.

6.11.1 TWTC shall indicate its intent to proceed with equipment installation in a AT&T Remote Site Location by submitting a BFFO to AT&T. The BFFO must be received by AT&T no later than thirty (30) days after AT&T's Application Response to TWTC's Bona Fide Application or TWTC's Application will expire.

6.11.2 AT&T will establish a Firm Order date based upon the date AT&T is in receipt of TWTC's BFFO. AT&T will acknowledge the receipt of TWTC's BFFO within seven (7) days of receipt, so that TWTC will have positive confirmation that its BFFO has been received. AT&T's response to a BFFO will include a Firm Order Confirmation, which contains the firm order date. No revisions may be made to a BFFO.

7. Construction and Provisioning

7.1 Construction and Provisioning Intervals.

7.1.1 In Florida and Tennessee, AT&T will complete construction for Remote Collocation Space as soon as possible within a maximum of ninety (90) days from receipt of a BFFO or as agreed to by the Parties. For Alterations requested to Remote Collocation Space after the initial space has been completed, AT&T will complete construction for Remote Collocation Space as soon as possible within a maximum of forty-five (45) days from receipt of a BFFO or as agreed to by the Parties, as long as no additional space has been requested by TWTC, If additional space has been requested by TWTC, AT&T will complete construction for the requested Remote

Collocation Space as soon as possible within a maximum of ninety (90) days from receipt of a BFFO for physical Remote Collocation Space and forty five (45) days from receipt of a BFFO for virtual Remote Collocation Space. If AT&T does not believe that construction will be completed within the relevant provisioning interval and AT&T and TWTC cannot agree upon a completion date, within forty-five (45) days of receipt of the BFFO for an initial request, or within thirty (30) days of receipt of the BFFO for an Alteration, AT&T may seek an extension from the Commission.

7.1.2 In Alabama, Georgia, Kentucky, Louisiana, Mississippi, North Carolina, and South Carolina, AT&T will complete construction for Remote Collocation Space under ordinary conditions as soon as possible within a maximum of sixty (60) days from receipt of a BFFO and ninety (90) days from receipt of a BFFO for extraordinary conditions, or as agreed to by the Parties. Ordinary conditions are defined as space available with only minor changes required to AT&T's support systems. (Examples include, but are not limited to: minor modifications to HVAC, cabling and AT&T's power plant). Extraordinary conditions, include, but may not be limited to: major AT&T equipment rearrangements or additions; power plant additions or upgrades; major mechanical additions or upgrades; major upgrades for ADA compliance; environmental hazards or hazardous materials abatement; and arrangements for which equipment shipping intervals are extraordinary in length. The Parties may mutually agree to renegotiate an alternative provisioning interval for the Remote Collocation Space requested or AT&T may seek a waiver from the interval, as set forth above, from the appropriate Commission, if AT&T does not believe that construction will be completed within the relevant provisioning interval.

7.1.3 If AT&T does not have space immediately available at a Remote Site Location, AT&T may elect, but not be limited, to make additional space available by rearranging AT&T facilities or constructing additional capacity. In such cases, the above intervals shall not apply and AT&T will provision the Remote Collocation Space in a nondiscriminatory manner and at parity with AT&T and will provide TWTC with the estimated completion date in its Application Response.

7.2 Joint Planning. Unless otherwise agreed to by the Parties, a joint planning meeting or other method of joint planning between AT&T and TWTC will commence within a maximum of twenty (20) days from AT&T's receipt of a BFFO. At such meeting, the Parties will agree to the preliminary design of the Remote Collocation Space and the equipment configuration requirements, as reflected in the Application and affirmed in the BFFO.

7.3 Permits. Each Party, its agent(s) or AT&T Certified Supplier(s) will diligently pursue filing for the permits required for the scope of work to be performed by that Party, its agent(s) or AT&T Certified Supplier(s) within ten (10) days of the completion of finalized construction designs and specifications.

7.4 Use of AT&T Certified Supplier. TWTC shall select a supplier, which has been approved as a AT&T Certified Supplier to perform all construction, engineering (as specified in TR 73503), installation, and removal work. TWTC, if a AT&T Certified Supplier, or TWTC's AT&T Certified Supplier must follow and comply with all of AT&T's specifications and the following AT&T Technical Requirements: TR 73503, TR 73519, TR 73572, and TR 73564. Unless the AT&T Certified Supplier has met the requirements for all of the required work activities, TWTC must use a different AT&T Certified Supplier for the work activities associated with transmission equipment, switching equipment and power equipment. AT&T shall provide TWTC with a list of AT&T Certified Suppliers, upon request. TWTC, if a AT&T Certified Supplier, or TWTC's AT&T Certified Supplier(s) shall be responsible for installing TWTC's equipment and associated components, extending power cabling to the AT&T power distribution frame, performing operational tests after installation is complete, and notifying AT&T's equipment engineers and TWTC upon successful completion of the installation and any associated work. When a AT&T Certified Supplier is used by TWTC, the AT&T Certified Supplier shall bill TWTC directly for all work performed for TWTC pursuant to this Attachment. AT&T shall have no liability for, nor responsibility to pay, such charges imposed by TWTC's AT&T Certified Supplier. AT&T shall make available its supplier certification program to TWTC or any supplier proposed by TWTC and will not unreasonably withhold certification. All work performed by or for TWTC shall conform to generally accepted industry standards.

7.5 Alarms and Monitoring. AT&T may place alarms in the Remote Site Location for the protection of AT&T equipment and facilities. TWTC shall be responsible for the placement, monitoring and removal of environmental and equipment alarms used to service TWTC's Remote Collocation Space. Upon request, AT&T will provide TWTC with applicable AT&T tariffed service(s) to facilitate remote monitoring of collocated equipment by TWTC. Both Parties shall use best efforts to notify the other of any verified environmental condition (e.g., temperature extremes or excess humidity) known to that Party.

7.6 Virtual to Physical Remote Collocation Space Relocation. In the event physical Remote Collocation Space was previously denied at a Remote Site Location due to technical reasons or space limitations and physical Remote Collocation Space has subsequently become available, TWTC may relocate its existing virtual Remote Collocation Space(s) to physical Remote Collocation Space and pay the appropriate fees associated with the rearrangement or reconfiguration of the services being terminated into the virtual Remote Collocation Space. If AT&T knows when additional physical Remote Collocation Space may become available at the Remote Site Location requested by TWTC, such information will be provided to TWTC in AT&T's written denial of physical Remote Collocation Space. To the extent that (i) physical Remote Collocation Space becomes available to TWTC within one hundred eighty (180) days of AT&T's written denial of TWTC's request for physical Remote Collocation Space, (ii) AT&T had knowledge that the Remote Collocation Space was

going to become available, and (iii) TWTC was not informed in the written denial that physical Remote Collocation Space would become available within such one hundred eighty (180) day period, then TWTC may relocate its virtual Remote Collocation Space to a physical Remote Collocation Space and will receive a credit for any nonrecurring charges previously paid for such virtual Remote Collocation Space. TWTC must arrange with a AT&T Certified Supplier for the relocation of equipment from a virtual Remote Collocation Space to a physical Remote Collocation Space and will bear the cost of such relocation, including the costs associated with moving the services from the virtual Remote Collocation Space to the new physical Remote Collocation Space.

7.6.1 In Alabama, AT&T will complete a relocation of a virtual Remote Collocation Space to a cageless physical Remote Collocation Space within sixty (60) days from AT&T's receipt of a BFFO and from a virtual Remote Collocation Space to a caged physical Remote Collocation Space within ninety (90) days from AT&T's receipt of a BFFO.

7.7 Virtual to Physical Conversion (In-Place). Virtual Remote Collocation Space may be converted to "in-place" physical caged Remote Collocation Space if the potential conversion meets all of the following criteria: 1) there is no change in the amount of equipment or the configuration of the equipment that was in the virtual Remote Collocation Space; 2) the conversion of the virtual Remote Collocation Space will not cause the equipment or the results of that conversion to be located in a space that AT&T has reserved for its own future needs; and 3) any changes to the existing Remote Collocation Space can be accommodated by existing power, HVAC, and other requirements. Unless otherwise specified herein, AT&T will complete virtual to physical Remote Collocation Space conversions (in-place) within sixty (60) days from receipt of the BFFO. AT&T will bill TWTC an Application Fee, as set forth in Exhibit B, on the date AT&T provides an Application Response to TWTC.

7.7.1 In Alabama and Tennessee, AT&T will complete virtual to physical conversions (in-place) within thirty (30) days from receipt of the BFFO as long as the conversion meets all of the criteria specified above in Section 7.7.

7.8 Cancellation. Unless otherwise specified in this Attachment, if at any time prior to Space Acceptance, TWTC cancels its order for Remote Collocation Space (Cancellation), AT&T will bill the applicable nonrecurring charge(s) for any and all work processes for which work has begun or been completed. In Florida, if TWTC cancels its order for Remote Collocation Space at any time prior to the Space Ready Date, no cancellation fee shall be assessed by AT&T; however, TWTC will be responsible for reimbursing AT&T for any costs specifically incurred by AT&T on behalf of TWTC up to the date that the written notice of cancellation was received by AT&T. In Georgia, if TWTC cancels its order for Remote Collocation Space at any time prior to Space Acceptance, AT&T will bill TWTC for all costs incurred prior to the date of Cancellation and for any costs incurred as a direct result of the

Cancellation, not to exceed the total amount that would have been due had the firm order not been cancelled.

7.9 Licenses. TWTC, at its own expense, will be solely responsible for obtaining from governmental authorities, and any other appropriate agency, entity, or person, all rights, privileges, permits, licenses, and certificates necessary or required to operate as a provider of telecommunications services to the public or to build-out, equip and/or occupy the Remote Collocation Space.

7.10 Environmental Compliance. The Parties agree to utilize and adhere to the Environmental Hazard Guidelines identified in Exhibit A attached hereto.

8. Rates and Charges

8.1 Rates. TWTC agrees to pay the rates and charges identified in Exhibit B attached hereto.

8.2 Recurring Charges. If TWTC has met the applicable fifteen (15) day acceptance walkthrough interval specified in Section 4, billing for recurring charges will begin upon the Space Acceptance Date. In the event TWTC fails to complete an acceptance walkthrough within the applicable fifteen (15) day interval, billing for recurring charges will commence on the Space Ready Date. If TWTC occupies the space prior to the Space Ready Date, the date TWTC occupies the space is deemed the Space Acceptance Date and billing for recurring charges will begin on that date. The billing for all applicable monthly recurring charges will begin in TWTC ‘s next billing cycle and will include any prorated charges for the period from TWTC’s Space Acceptance Date or Space Ready Date, whichever is appropriate pursuant to Section 4.2, to the date the bill is issued by AT&T.

8.3 Application Fee. AT&T shall assess a nonrecurring Application Fee, via a service order, on the date that AT&T provides an Application Response. AT&T will bill the appropriate non-recurring Application Fee on the date that AT&T provides an Application Response to TWTC.

8.4 Bay Space. The bay space charge recovers the costs associated with air conditioning, ventilation and other allocated expenses for the maintenance of the Remote Site Location, and includes the amperage necessary to power TWTC’s equipment. TWTC shall remit bay space charges based upon the number of bays requested. AT&T will assign Remote Collocation Space in conventional remote site bay lineups where feasible.

8.5 Power. AT&T shall make available –48 Volt (-48V) Direct Current (DC) power for TWTC’s Remote Collocation Space at a AT&T Battery Distribution Fuse Bay (BDFB) within the Remote Site Location. The charge for power shall be assessed as part of the recurring charge for bay space, as referenced above in Section 8.4. If the power requirements for TWTC’s equipment exceed the capacity available, then such

additional power requirements shall be assessed on an individual case basis. AT&T will revise TWTC's recurring power charges to reflect a power upgrade upon notification of the completion of the upgrade by TWTC's AT&T Certified Vendor. AT&T will revise recurring power charges to reflect a power reduction upon AT&T's receipt of the Power Reduction Form from TWTC certifying the completion of the power reduction, including the removal of the power cabling by TWTC's AT&T Certified Supplier.

8.6 Adjacent Collocation Power. Charges for AC power will be assessed on a per breaker ampere, per month basis. Rates include the provision of commercial and standby AC power, where available. When obtaining power from a AT&T service panel, protection devices and power cables must be engineered (sized) and installed by TWTC's AT&T Certified Supplier, with the exception that AT&T shall engineer and install the protection devices and power cables for Adjacent Collocation. TWTC's AT&T Certified Supplier must provide a copy of the engineering power specifications prior to the equipment becoming operational. Charges for AC power shall be assessed pursuant to the rates specified in Exhibit B. AC power voltage and phase ratings shall be determined on a per location basis. At TWTC's option, TWTC may arrange for AC power in an Adjacent Collocation arrangement from a retail provider of electrical power.

8.7 Security Escort. After TWTC has used its one accompanied site visit, pursuant to Section 5.9.1, and prior to TWTC's completion of the AT&T Security Training requirements, contained in Section 12 of this Agreement, a security escort will be required when TWTC's employees, approved agent, supplier, or Guest(s) desire access to the Remote Site Location The rates for security escort service are assessed pursuant to the fee schedule contained in Exhibit B, beginning with the scheduled escort time agreed to by the Parties. AT&T will wait for one-half (1/2) hour after the scheduled escort time to provide such requested escort service and TWTC shall pay for such half-hour charges in the event TWTC's employees, approved agent, supplier or Guest(s) fails to show up for the scheduled escort appointment.

8.8 Other. If no collocation rate element and associated rate is identified in Exhibit B of this Attachment, the Parties, upon request by either Party, will negotiate the rate for the specific collocation service or function identified in this Attachment.

9. Insurance

9.1 TWTC shall, at its sole cost and expense, procure, maintain, and keep in force insurance as specified in this Section and underwritten by insurance companies licensed to do business in the states applicable under this Agreement and having a Best's Insurance Rating of A-.

9.2 TWTC shall maintain the following specific coverage:

9.2.1 Commercial General Liability coverage in the amount of ten million dollars ($10,000,000.00) or a combination of Commercial General Liability and Excess/Umbrella coverage totaling not less than ten million dollars ($10,000,000.00). AT&T shall be named as an Additional Insured on the Commercial General Liability policy as specified herein.

9.2.2 Statutory Workers Compensation coverage and Employers Liability coverage in the amount of one hundred thousand dollars ($100,000.00) each accident, one hundred thousand dollars ($100,000.00) each employee by disease, and five hundred thousand dollars ($500,000.00) policy limit by disease.

9.2.3 All Risk Property coverage on a full replacement cost basis insuring all of TWTC's real and personal property situated on or within a AT&T Premises and AT&T's Remote Site Locations.

9.2.4 TWTC may elect to purchase business interruption and contingent business interruption insurance, having been advised that AT&T assumes no liability for loss of profit or revenues should an interruption of service occur.

9.3 The limits set forth in Section 9.2 above may be increased by AT&T from time to time during the term of this Agreement upon thirty (30) days notice to TWTC to at least such minimum limits as shall then be customary with respect to comparable occupancy of AT&T structures.

9.4 All policies purchased by TWTC shall be deemed to be primary and not contributing to or in excess of any similar coverage purchased by AT&T. All insurance must be in effect on or before the date equipment is delivered to a AT&T Remote Site Location and shall remain in effect for the term of this Agreement or until all of TWTC's property has been removed from AT&T's Remote Site Location, whichever period is longer. If TWTC fails to maintain required coverage, AT&T may pay the premiums thereon and seek reimbursement of same from TWTC.

9.5 TWTC shall submit certificates of insurance reflecting the coverage required pursuant to this Section within a minimum of ten (10) business days prior to the commencement of any work in the Remote Collocation Space. Failure to meet this interval may result in construction and equipment installation delays. TWTC shall arrange for AT&T to receive thirty (30) business days' advance notice of cancellation or non-renewal from TWTC's insurance company. TWTC shall forward a certificate of insurance and notice of cancellation/non-renewal to AT&T at the following address:

BellSouth Telecommunications, Inc.
Attn.: Risk Management Office - Finance
17F54 AT&T Center
675 W. Peachtree Street
Atlanta, Georgia 30375

9.6 TWTC must conform to recommendations made by AT&T's fire insurance company to the extent AT&T has agreed to, or shall hereafter agree to, such recommendations.

9.7 Self-Insurance. If TWTC's net worth exceeds five hundred million dollars ($500,000,000.00), TWTC may elect to request self-insurance status in lieu of obtaining any of the insurance required in Section 9.2. TWTC shall provide audited financial statements to AT&T thirty (30) days prior to the commencement of any work in the Remote Collocation Space. AT&T shall then review such audited financial statements and respond in writing to TWTC in the event that self-insurance status is not granted to TWTC. If AT&T approves TWTC for self-insurance, TWTC shall annually furnish to AT&T, and keep current, evidence of such net worth that is attested to by one of TWTC's corporate officers. The ability to self-insure shall continue so long as TWTC meets all of the requirements of this Section. If TWTC subsequently no longer satisfies the requirements of this Section, TWTC is required to purchase insurance as indicated by Section 9.2.

9.8 The net worth requirements set forth in Section 9.7 may be increased by AT&T from time to time during the term of this Agreement upon thirty (30) days' notice to TWTC to at least such minimum limits as shall then be customary with respect to comparable occupancy of a AT&T Premises.

9.9 Failure to comply with the provisions of this Section will be deemed a material breach of this Attachment.

10. Mechanics Liens

10.1 If any mechanics lien or other liens are filed against property of either Party (AT&T or TWTC), or any improvement thereon by reason of or arising out of any labor or materials furnished or alleged to have been furnished or to be furnished to or for the other Party or by reason of any changes, or additions to said property made at the request or under the direction of the other Party, the other Party directing or requesting those changes shall, within thirty (30) business days after receipt of written notice from the Party against whose property said lien has been filed, either pay such lien or cause the same to be bonded off the affected property in the manner provided by law. The Party causing said lien to be placed against the property of the other shall also defend, at its sole cost and expense, on behalf of the other, any action, suit or proceeding which may be brought for the enforcement of such liens and shall pay any damage and discharge any judgment entered thereon.

11. Inspections

11.1 AT&T may conduct an inspection of TWTC's equipment and facilities in TWTC's Remote Collocation Space(s) prior to the activation of facilities and/or services between TWTC's equipment and equipment of AT&T. AT&T may conduct an inspection if TWTC adds equipment and may otherwise conduct routine inspections at

reasonable intervals mutually agreed upon by the Parties. AT&T shall provide TWTC with a minimum of forty-eight (48) hours or two (2) business days, whichever is greater, advance notice of all such inspections. All costs of such inspections shall be borne by AT&T.

12. Security and Safety Requirements

12.1 Unless otherwise specified, TWTC will be required, at its own expense, to conduct a statewide investigation of criminal history records for each TWTC employee hired in the past five years being considered for work on a AT&T Remote Site Location, for the states/counties where the TWTC employee has worked and lived for the past five years. Where state law does not permit statewide collection or reporting, an investigation of the applicable counties is acceptable. TWTC shall not be required to perform this investigation if an affiliated company of TWTC has performed an investigation of the TWTC employee seeking access, if such investigation meets the criteria set forth above. This requirement will not apply if TWTC has performed a pre-employment statewide investigation of criminal history records of the TWTC employee for the states/counties where the TWTC employee has worked and lived for the past five years or, where state law does not permit a statewide investigation, an investigation of the applicable counties.

12.2 TWTC will be required to administer to its personnel assigned to the AT&T Premises security training either provided by AT&T, or meeting criteria defined by AT&T at www.interconnection.bellsouth.com/guides.

12.3 TWTC shall provide its employees and agents with picture identification, which must be worn, and visible at all times while in TWTC's Remote Collocation Space or other areas in or around the Remote Site Location. The photo Identification card shall bear, at a minimum, the employee's name and photo, and TWTC's name. AT&T reserves the right to remove from its Remote Site Location any employee of TWTC not possessing identification issued by TWTC or who have violated any of AT&T's policies as outlined in the CLEC Security Training documents. TWTC shall hold AT&T harmless for any damages resulting from such removal of TWTC's personnel from AT&T Remote Site Location. TWTC shall be solely responsible for ensuring that any Guest(s) of TWTC is in compliance with all subsections of this Section.

12.4 TWTC shall not assign to the AT&T Remote Site Location any personnel with records of felony criminal convictions. TWTC shall not assign to the AT&T Remote Site Location any personnel with records of misdemeanor convictions, except for misdemeanor traffic violations, without advising AT&T of the nature and gravity of the offense(s). AT&T reserves the right to refuse access to any of TWTC's personnel who have been identified to have misdemeanor criminal convictions. Notwithstanding the foregoing, in the event TWTC chooses not to advise AT&T of the nature and gravity of any misdemeanor conviction, TWTC may, in the alternative, certify to AT&T that it shall not assign to the AT&T Remote Site Location any personnel with records of misdemeanor convictions (other than misdemeanor traffic violations).

12.4.1 TWTC shall not knowingly assign to the AT&T Remote Site Location any individual who was a former employee of AT&T and whose employment with AT&T was terminated for a criminal offense whether or not AT&T sought prosecution of the individual for the criminal offense.

12.4.2 TWTC shall not knowingly assign to the AT&T Remote Site Location any individual who was a former supplier of AT&T and whose access to a AT&T Remote Site Location was revoked due to the commission of a criminal offense, whether or not AT&T sought prosecution of the individual for the criminal offense.

12.5 For each TWTC employee or agent hired by TWTC within five years prior to being considered for work on the AT&T Premises or AT&T's Remote Site Locations, who requires access to a AT&T Remote Site Location to perform work in TWTC's Remote Collocation Space(s), TWTC shall furnish AT&T, a certification that the aforementioned background check and security training were completed. This certification must be provided to and approved by AT&T before an employee or agent will be granted such access to a AT&T Premises. The certification will contain a statement that no felony convictions were found and certifying that the employee completed the security training. If the employee's criminal history includes misdemeanor convictions, TWTC will disclose the nature of the convictions to AT&T at that time. In the alternative, TWTC may certify to AT&T that it shall not assign to the AT&T Remote Site Location any personnel with records of misdemeanor convictions, other than misdemeanor traffic violations.

12.5.1 For all other TWTC employees requiring access to a AT&T Remote Site Location pursuant to this Attachment, TWTC shall furnish AT&T, prior to an employee gaining such access, a certification that the employee is not subject to the requirements of Section 12.5 above and that security training was completed by the employee.

12.6 At AT&T's request, TWTC shall promptly remove from the AT&T Remote Site Location any employee of TWTC that AT&T does not wish to grant access to a Remote Site Location: 1) pursuant to any investigation conducted by AT&T, or 2) prior to the initiation of an investigation if an employee of TWTC is found interfering with the property or personnel of AT&T or another collocated telecommunications carrier, provided that an investigation shall be promptly commenced by AT&T.

12.7 Security Violations. AT&T reserves the right to interview TWTC's employees, agents, suppliers, or Guests in the event of wrongdoing in or around a AT&T Premises or Remote Site Location or involving AT&T's or another collocated telecommunications carrier's property or personnel, provided that AT&T shall provide reasonable notice to TWTC's Security representative of such interview. TWTC and its employees, agents, suppliers, or Guests shall reasonably cooperate with AT&T's investigation into allegations of wrongdoing or criminal conduct committed by, witnessed by, or involving TWTC's employees, agents, suppliers, or Guests.

Additionally, AT&T reserves the right to bill TWTC for all reasonable costs associated with investigations involving its employees, agents, or suppliers, or Guests if it is established and mutually agreed in good faith that TWTC's employees, agents, suppliers, or Guests are responsible for the alleged act(s). AT&T shall bill TWTC for AT&T property, which is stolen or damaged, where an investigation determines the culpability of TWTC's employees, agents, suppliers, or Guests and where TWTC agrees, in good faith, with the results of such investigation. TWTC shall notify AT&T in writing immediately in the event that TWTC discovers one of its employees, agents, suppliers, or Guests already working on the AT&T Remote Site Location is a possible security risk. Upon request of the other Party, the Party who is the employer shall discipline consistent with its employment practices, up to and including removal from a AT&T Premises or Remote Site Location, any employee found to have violated the security and safety requirements of this Section. TWTC shall hold AT&T harmless for any damages resulting from such removal of TWTC's personnel from a AT&T Premises.

12.8 Use of Supplies. Unauthorized use of telecommunications equipment or supplies by either Party, whether or not used routinely to provide telephone service (e.g. plug-in cards,) will be strictly prohibited and handled appropriately. Costs associated with such unauthorized use may be charged to the offending Party, as may be all associated investigative costs.

12.9 Use of Official Lines. Except for non-toll calls necessary in the performance of their work, neither Party shall use the telephone(s) of the other Party on the AT&T Remote Site Location. Charges for unauthorized telephone calls may be charged to the offending Party, as may be all associated investigative costs.

12.10 Accountability. Full compliance with the Security requirements of this Section shall in no way limit the accountability of either Party to the other for the improper actions of its employees, agents, suppliers, or Guests.

13. Destruction of Remote Collocation Space

13.1 In the event a Remote Collocation Space is wholly or partially damaged by fire, windstorm, hurricane, tornado, flood or by similar Acts of God or force majeure circumstances beyond a Party's reasonable control to such an extent as to be rendered wholly unsuitable for TWTC's permitted use hereunder, then either Party may elect within ten (10) days after such damage, to terminate this Attachment with respect to the affected Remote Collocation Space, and if either Party shall so elect, by giving the other written notice of termination, both Parties shall stand released of and from further liability under the terms hereof with respect to such Remote Collocation Space. If the Remote Collocation Space shall suffer only minor damage and shall not be rendered wholly unsuitable for TWTC's permitted use, or is damaged and the option to terminate is not exercised by either Party, AT&T covenants and agrees to proceed promptly without expense to TWTC, except for improvements not to the property of AT&T, to repair the damage. AT&T shall have a reasonable time within which to

rebuild or make any repairs, and such rebuilding and repairing shall be subject to delays caused by storms, shortages of labor and materials, government regulations, strikes, walkouts, and causes beyond the control of AT&T, which causes shall not be construed as limiting factors, but as exemplary only. TWTC may, at its own expense, accelerate the rebuild of its Remote Collocation Space and equipment provided, however, that a AT&T Certified Supplier is used and the necessary space preparation has been completed. A AT&T Certified Vendor must perform a rebuild of equipment. If TWTC's acceleration of the project increases the cost of the project, then those additional charges will be incurred at TWTC's expense. Where allowed and where practical, TWTC may erect a temporary facility while AT&T rebuilds or makes repairs. In all cases where the Remote Collocation Space shall be rebuilt or repaired, TWTC shall be entitled to an equitable abatement of rent and other charges, depending upon the unsuitability of the Remote Collocation Space for TWTC's permitted use, until such Remote Collocation Space is fully repaired and restored and TWTC's equipment installed therein (but in no event later than thirty (30) days after the Remote Collocation Space is fully repaired and restored). Where TWTC has placed a Remote Site Adjacent Arrangement pursuant to Section 3.4, TWTC shall have the sole responsibility to repair or replace said Remote Site Adjacent Arrangement provided herein. Pursuant to this Section, AT&T will restore the associated services to the Remote Site Adjacent Arrangement.

14. Eminent Domain

14.1 If the whole of a Remote Collocation Space or Remote Site Adjacent Arrangement shall be taken by any public authority under the power of eminent domain, then this Attachment shall terminate with respect to such Remote Collocation Space or Remote Site Adjacent Arrangement as of the date possession shall be taken by such public authority and rent and other charges for the Remote Collocation Space or Remote Site Adjacent Arrangement shall be paid up to that day with a proportionate refund by AT&T of such rent and charges as may have been paid in advance for a period subsequent to the date of the taking. If any part of the Remote Collocation Space or Remote Site Adjacent Arrangement shall be taken under eminent domain, AT&T and TWTC shall each have the right to terminate this Attachment with respect to such Remote Collocation Space or Remote Site Adjacent Arrangement and declare the same null and void, by written notice of such intention to the other Party within ten (10) days after such taking.

15. Nonexclusivity

15.1 TWTC understands that this Attachment is not exclusive and that AT&T may enter into similar agreements with other Parties. Assignment of Remote Collocation Space pursuant to all such agreements shall be determined by space availability and made on a first come, first served basis.

ENVIRONMENTAL AND SAFETY PRINCIPLES

The following principles provide basic guidance on environmental and safety issues when applying for and establishing physical collocation arrangements.

1. GENERAL PRINCIPLES

1.1 Compliance with Applicable Law. AT&T and TWTC agree to comply with applicable federal, state, and local environmental and safety laws and regulations including U.S. Environmental Protection Agency (USEPA) regulations issued under the Clean Air Act (CAA), Clean Water Act (CWA), Resource Conservation and Recovery Act (RCRA), Comprehensive Environmental Response, Compensation and Liability Act (CERCLA), Superfund Amendments and Reauthorization Act (SARA), the Toxic Substances Control Act (TSCA), and OSHA regulations issued under the Occupational Safety and Health Act of 1970, as amended, and National Fire Protection Association (NFPA) NEC and National Electric Safety Codes (NESC) ("Applicable Laws") requirements. Each Party shall notify the other if compliance inspections are conducted by regulatory agencies and/or citations are issued that relate to any aspect of this Attachment.

1.2 Notice. AT&T and TWTC shall provide notice to the other, including any Material Safety Data Sheets (MSDSs), of known and recognized physical hazards or Hazardous Chemicals existing on site or brought on site. A Hazardous Chemical inventory list is posted on an OSHA Poster and updated annually at each Central Office. This Poster is normally located near the front entrance of the building or in the lounge area. Each Party is required to provide specific notice for known potential Imminent Danger conditions. TWTC should contact 1-800-743-6737 for any AT&T MSDS required.

1.3 Practices/Procedures. AT&T may make available additional environmental control procedures for TWTC to follow when working at a AT&T Remote Site Location (See Section 2, below). These practices/procedures will represent the regular work practices required to be followed by the employees and suppliers of AT&T for environmental protection. TWTC will require its suppliers, agents, Guests and others accessing the AT&T Remote Site Location to comply with these practices. Section 2 lists the Environmental categories where BST practices should be followed by TWTC when operating in the AT&T Remote Site Location.

1.4 Environmental and Safety Inspections. AT&T reserves the right to inspect TWTC's Remote Collocation Space with proper notification. AT&T reserves the right to stop any TWTC work operation that imposes Imminent Danger to the environment, employees or other persons in or around a Remote Site Location.

1.5 Hazardous Materials Brought On Site. Any hazardous materials brought into, used, stored or abandoned a AT&T Remote Site Location by TWTC are owned by and considered the property of TWTC. TWTC will indemnify AT&T for claims, lawsuits or damages to persons or property caused by these materials. Without prior written AT&T approval, no substantial new safety or environmental hazards can be created by TWTC or different hazardous materials used by TWTC at the AT&T Remote Site Location. TWTC must demonstrate adequate emergency response capabilities for the

materials used by TWTC or remaining at a AT&T Remote Site Location.

1.6 Spills and Releases. When contamination is discovered at a AT&T Remote Site Location, either Party discovering the condition must notify the other Party. All Spills or Releases of regulated materials will immediately be reported by TWTC to AT&T.

1.7 Coordinated Environmental Plans and Permits. AT&T and TWTC will coordinate plans, permits or information required to be submitted to government agencies, such as emergency response plans, spill prevention control and countermeasures (SPCC) plans and community reporting. If fees are associated with filing, AT&T and TWTC will develop a cost sharing procedure. If AT&T's permit or EPA identification number must be used, TWTC must comply with all of AT&T's permit conditions and environmental processes, including environmental "best management practices (BMP)" (see Section 2, below) and the selection of BST disposition vendors and disposal sites.

1.8 Environmental and Safety Indemnification. AT&T and TWTC shall indemnify, defend and hold harmless the other Party from and against any claims (including, without limitation, third-party claims for personal injury or death or real or personal property damage), judgments, damages, (including direct and indirect damages, and punitive damages), penalties, fines, forfeitures, costs, liabilities, interest and losses arising in connection with the violation or alleged violation of any Applicable Law or contractual obligation or the presence or alleged presence of contamination arising out of the acts or omissions of the indemnifying Party, its employees, agents, suppliers, or Guests concerning its operations at a Remote Site Location.

2. CATEGORIES FOR CONSIDERATION OF ENVIRONMENTAL ISSUES

2.1 When performing functions that fall under the following Environmental categories on AT&T's Remote Site Location, TWTC agrees to comply with the applicable sections of the current issue of AT&T's Environmental and Safety Methods and Procedures (M&Ps), incorporated herein by this reference. TWTC further agrees to cooperate with AT&T to ensure that TWTC's employees, agents, suppliers and/or Guests are knowledgeable of and satisfy those provisions of AT&T's Environmental M&Ps which apply to the specific Environmental function being performed by TWTC, its employees, agents ,suppliers and/or Guests.

2.1.1 The most current version of reference documentation must be requested from TWTC's AT&T Regional Contract Manager (RCM).

ENVIRONMENTAL CATEGORIES	ENVIRONMENTAL ISSUES	ADDRESSED BY THE FOLLOWING DOCUMENTATION
Disposal of hazardous material or other regulated material (e.g., batteries, fluorescent tubes, solvents & cleaning materials)	Compliance with all applicable local, state, & federal laws and regulations Pollution liability insurance	• Std T&C 450 • Fact Sheet Series 17000 • Std T&C 660-3

	EVET approval of supplier	• Approved Environmental Vendor List (Contact ATCC Representative)
Emergency response	Hazmat/waste release/spill fire safety emergency	• Fact Sheet Series 1700 • Building Emergency Operations Plan (EOP) (specific to and located on Remote Site Location)
Contract labor/outsourcing for services with environmental implications to be performed on AT&T Remote Site Location (e.g., disposition of hazardous material/waste; maintenance of storage tanks)	Compliance with all applicable local, state, & federal laws and regulations Performance of services in accordance with BST's environmental M&Ps InsuranceTWTC	• Std T&C 450 • Std T&C 450-B • (Contact ATCC Representative for copy of appropriate E/S M&Ps.) • Std T&C 660
Transportation of hazardous material	Compliance with all applicable local, state, & federal laws and regulations Pollution liability insurance EVET approval of supplier	• Std T&C 450 • Fact Sheet Series 17000 • Std T&C 660-3 • Approved Environmental Vendor List (Contact ATCC Representative)
Maintenance/operations work which may produce a waste Other maintenance work	Compliance with all applicable local, state, & federal laws and regulations Protection of BST employees and equipment	• Std T&C 450 • 29CFR 1910.147 (OSHA Standard) • 29CFR 1910 Subpart O (OSHA Standard)
Janitorial services	All waste removal and disposal must conform to all applicable federal, state and local regulations All Hazardous Material and Waste Asbestos notification and protection of employees and equipment	• –Procurement Manager (CRES Related Matters)-BST Supply Chain Services • Fact Sheet Series 17000 • GU-BTEN-001BT, Chapter 3 • BSP 010-170-001BS

		(Hazcom)
Manhole cleaning	Compliance with all applicable local, state, & federal laws and regulations Pollution liability insurance EVET approval of supplier	• Std T&C 450 • Fact Sheet 14050 • BSP 620-145-011PR Issue A, August 1996 • Std T&C 660-3 • Approved Environmental Vendor List (Contact ATCC Representative)
Removing or disturbing building materials that may contain asbestos	Asbestos work practices	• GU-BTEN-001BT, Chapter 3 For questions regarding removing or disturbing materials that contain asbestos, call the AT&T Building Service Center: AL, MS, TN, KY & LA (local area code) 557-6194 FL, GA, NC & SC (local area code) 780-2740

3. DEFINITIONS

Generator. Under RCRA, the person whose act produces a Hazardous Waste, as defined in 40 CFR 261, or whose act first causes a Hazardous Waste to become subject to regulation. The Generator is legally responsible for the proper management and disposal of Hazardous Wastes in accordance with regulations.

Hazardous Chemical. As defined in the U.S. Occupational Safety and Health (OSHA) hazard communication standard (29 CFR 1910.1200), any chemical which is a health hazard or physical hazard.

Hazardous Waste. As defined in section 1004 of RCRA.

Imminent Danger. Any conditions or practices at a remote site location which are such that a danger exists which could reasonably be expected to cause immediate death or serious harm to people or immediate significant damage to the environment or natural resources.

Spill or Release. As defined in Section 101 of CERCLA.

4. ACRONYMS

ATCC – Account Team Collocation Coordinator

BST – BST Telecommunications

CRES – Corporate Real Estate and Services (formerly PS&M)

DEC/LDEC - Department Environmental Coordinator/Local Department Environmental Coordinator

E/S – Environmental/Safety

EVET - Environmental Vendor Evaluation Team

GU-BTEN-001BT - AT&T Environmental Methods and Procedures

NESC - National Electrical Safety Codes

P&SM - Property & Services Management

Std T&C - Standard Terms & Conditions

Attachment 5

Access to Numbers and Number Portability

TABLE OF CONTENTS

1. NON-DISCRIMINATORY ACCESS TO TELEPHONE NUMBERS 3

2. LOCAL NUMBER PORTABILITY..... 4

3. OSS RATES 5

4. LNP IN CONJUNCTION WITH LOCAL SWITCHING 5

ACCESS TO NUMBERS AND NUMBER PORTABILITY

1. NON-DISCRIMINATORY ACCESS TO TELEPHONE NUMBERS

1.1 During the term of this Agreement, where TWTC is utilizing its own switch, TWTC shall contact the North American Numbering Plan Administrator (NANPA), or, where applicable, the relevant Number Pool Administrator for the assignment of numbering resources.

1.2 Where AT&T provides local switching or resold services to TWTC, AT&T will provide TWTC with online access to available telephone numbers as defined by applicable FCC rules and regulations on a first come first served basis. TWTC acknowledges that such access to numbers shall be in accordance with the appropriate FCC rules and regulations. TWTC may designate up to a forecasted six (6) months supply of available numbers as intermediate (an available number provided to TWTC telephone numbers per rate center if the following conditions are met:

1.2.1 TWTC must: (1) indicate that all of the intermediate numbers currently held by TWTC in each rate center where TWTC will be requesting intermediate telephone numbers have six (6) or less months to exhaust; (2) supply projected monthly telephone number demand on a rate center basis for the coming twelve (12) months for each rate center where TWTC will be requesting intermediate telephone numbers; and, (3) demonstrate that the utilization level on current intermediate numbers held by TWTC in the rate center where TWTC is requesting telephone numbers has reached at least 75%.

1.2.2 The above information will be provided by TWTC by submitting to AT&T a fully completed "CO Code Assignments Months To Exhaust Certification Worksheet – TN Level" ("MTE Worksheet"), Appendix B to the Central Office Code (NXX) Assignments Guidelines, INC 95-0407-008 for each rate center where TWTC will be requesting intermediate telephone numbers. The utilization level is calculated by dividing all intermediate numbers currently assigned by TWTC to End Users by the total number of intermediate numbers held by TWTC in the rate center and multiplying the result by one hundred (100).

1.2.3 If fulfilling TWTC's request for intermediate numbers results in AT&T having to submit a request for additional telephone numbers to a national numbering administrator (either NANPA CO Code Administration or NeuStar Pooling Administration or their successors), AT&T will submit the required numbering request to the national numbering administrator to satisfy TWTC's request for intermediate numbers. AT&T will also pursue all appropriate steps (including submitting a safety valve request (petition) to the appropriate Commission if the

numbering request is denied by the national administrator) to satisfy TWTC's request for intermediate numbers. In these cases, AT&T is not obligated to fulfill the request by TWTC for intermediate numbers unless, and until, AT&T's request for additional numbering resources is granted.

1.2.4 TWTC agrees to supply supporting information for any numbering request and/or safety valve request that AT&T files pursuant to Section 1.2.3above.

1.3 TWTC acknowledges that there may be instances where there is an industry shortage of available telephone numbers in a number plan area (NPA). These instances occur where a jeopardy status has been declared by NANPA and the industry has determined that limiting the assignment of new numbers is the appropriate method to employ until the jeopardy can be alleviated. In such NPA jeopardy situations where assignment of new numbers is restricted per the jeopardy guidelines developed by the industry, AT&T may request that TWTC cancel all or a portion of its unassigned intermediate numbers. TWTC's consent to AT&T's request shall not be unreasonably withheld.

2. LOCAL NUMBER PORTABILITY

2.1 The Parties will offer Local number portability (LNP) in accordance with rules, regulations and guidelines adopted by the Commission, the FCC and industry fora.

2.2 Service Management System (SMS) Administration. The Parties will work cooperatively with other local service providers to establish and maintain contracts for the LNP SMS.

2.3 Network Architecture. The Parties agree to adhere to applicable FCC rules and orders governing LNP network architecture.

2.4 Signaling. In connection with LNP, each Party agrees to use SS7 signaling in accordance with applicable FCC rules and orders.

2.5 N-1 Query. The Parties agree to adhere to applicable FCC rules and orders governing LNP N-1 queries.

2.6 Porting of Reserved Numbers and Suspended Lines. End Users of each Party may port numbers, via LNP, that are in a denied state or that are on suspend status. In addition, End Users of each Party may port reserved numbers that the End User has paid to reserve. Portable reserved numbers are identified on the Customer Service Record (CSR). In anticipation of porting from one Party to the other Party, a Party's End User may reserve additional telephone numbers and include them with the numbers that are subsequently ported to the other Party. It is not necessary to restore a denied number before it is ported.

2.7 Splitting of Number Groups. The Parties shall permit blocks of subscriber numbers (including, but not limited to, Direct Inward Dial (DID) numbers and MultiServ groups) to be split in connection with an LNP request. AT&T and TWTC shall permit End Users who port a portion of DID numbers to retain DID

service on the remaining portion of numbers. If a Party requests porting a range of DID numbers smaller than a whole block, that Party shall pay the applicable charges for doing so as set forth in Attachment 2 of this Agreement. In the event no rate is set forth in Attachment 2, then the Parties shall negotiate a rate for such services.

2.8 The Parties will set Location Routing Number (LRN) unconditional or 10-digit triggers where applicable. Where triggers are set, the porting Party will remove the ported number at the same time the trigger is removed.

2.9 A trigger order is a service order issued in advance of the porting of a number. A trigger order 1) initiates call queries to the AIN SS7 network in advance of the number being ported; and 2) provides for the new service provider to be in control of when a number ports.

2.10 Where triggers are not set, the Parties shall coordinate the porting of the number between service providers so as to minimize service interruptions to the End User.

2.11 AT&T and TWTC will work cooperatively to implement changes to LNP process flows ordered by the FCC or as recommended by standard industry foras addressing LNP.

2.12 Where TWTC utilizes AT&T's LNP Query Service, AT&T shall bill and TWTC shall pay the query charge associated with LNP Query Service as set forth in Attachment 2. To receive the LNP Query Service charge set forth in Attachment 2, TWTC shall fill out and submit the Interconnection data sheet for AT&T LNP Query Service. The form can be obtained on www.interconnection.bellsouth.com under AT&T LNP Query Service and click on forms. Once the form has been filled out and submitted the LNP Query charge will take effect on the approved date. This charge is not subject to the resale discount set forth in Attachment 1 of this Agreement.

3. OSS RATES

3.1 The terms, conditions and rates for OSS utilized in connection with LNP are as set forth in Exhibit A of Attachment 2.

4. LNP IN CONJUNCTION WITH LOCAL SWITCHING

4.1 Where TWTC purchases local switching from AT&T, the Parties shall adhere to the following processes:

4.2 When TWTC submits an LSR for services, if the telephone number associated with the services requested resides in a switch other than AT&T's, then AT&T will submit an LNP LSR to the appropriate switch owner. TWTC shall be responsible for reimbursing AT&T for any costs or charges imposed on AT&T by the switch owner resulting from the submission of the LNP LSR. In addition, TWTC shall pay to AT&T the manual service order charges specified in Exhibit A of

Attachment 2 of this Agreement for AT&T's creation and submission of the LNP LSR to the appropriate switch owner.

4.3 Working telephone numbers, telephone numbers for which payment has been made to reserve and telephone numbers that are in a denied state (but not disconnected) or suspended status may be subject to porting.

Attachment 6

Pre-Ordering, Ordering, Provisioning, Maintenance and Repair

TABLE OF CONTENTS

1. Quality of Pre-Ordering, Ordering, Provisioning, Maintenance and Repair 3

2. Access to Operations Support Systems 3

3. Miscellaneous 8

PRE-ORDERING, ORDERING, PROVISIONING, MAINTENANCE AND REPAIR

1. Quality of Pre-Ordering, Ordering, Provisioning, Maintenance and Repair

1.1 AT&T shall provide to TWTC nondiscriminatory access to its OSS and the necessary information contained therein in order that TWTC can perform the functions of pre-ordering, ordering, provisioning, maintenance and repair, and billing. AT&T shall provide TWTC with all relevant documentation (manuals, user guides, specifications, etc.) regarding business rules and other formatting information as well as practices and procedures necessary to ensure requests are efficiently processed. All documentation will be readily accessible at AT&T's Interconnection Web site. AT&T shall ensure that its OSS are designed to accommodate requests for both current and projected demands of TWTC and other CLECs in the aggregate.

2. Access to Operations Support Systems

2.1 AT&T shall provide to TWTC nondiscriminatory access to its OSS and the necessary information contained therein in order that TWTC can perform the functions of pre-ordering, ordering, provisioning, maintenance and repair, and billing. AT&T shall provide nondiscriminatory access to the OSS through manual and/or electronic interfaces as described in this Attachment. It is the sole responsibility of TWTC to obtain the technical capability to access and utilize AT&T's OSS interfaces. Specifications for TWTC's access and use of AT&T's electronic interfaces are set forth at AT&T's Interconnection Web site.

2.1.1 TWTC agrees to comply with the provisions of the OSS Interconnection Volume Guidelines as set forth at AT&T's Interconnection Web site.

2.2 <u>Pre-Ordering</u>

2.2.1 AT&T will provide to TWTC electronic access to AT&T's OSS and the information contained therein in order that TWTC can perform the following pre-ordering functions: service address validation, telephone number selection, service and feature availability, due date information, customer record information and loop makeup information. Mechanized access is provided by electronic interfaces whose specifications for access and use are set forth at AT&T's Interconnection Web site. The process by which the Parties will manage these electronic interfaces to include the development and introduction of new interfaces will be governed by the change management process as described in Section 2.7 below.

2.2.2 AT&T shall provide to TWTC electronic access to customer service record information in accordance with the applicable performance intervals referenced in Attachment 9. If electronic access is not available, AT&T shall provide to TWTC such information within twenty-four (24) hours. TWTC shall provide to AT&T access to customer record information, including circuit numbers associated with each telephone number where applicable. TWTC shall provide such information within four (4) hours after request via electronic access where available. If electronic access is not available, TWTC shall provide to AT&T paper copies of customer record information, including circuit numbers associated with each telephone number where applicable. TWTC shall use commercially reasonable efforts to provide to AT&T such customer service records within twenty-four (24) hours of a valid request, exclusive of Saturdays, Sundays and holidays.

2.2.3 The Parties agree not to view, copy, or otherwise obtain access to the customer record information of any customer without that customer's permission. The Parties will obtain access to customer record information only in strict compliance with applicable laws, rules, or regulations of the state in which the service is provided. The Parties reserve the right to audit the other Party's access to customer record information. If either Party has reason to believe, through its audit or by any other means, that the other Party is accessing customer record information without having obtained the proper customer authorization (Letter of Authorization, or LOA), the Party upon reasonable notice to the other Party may take corrective action, including but not limited to suspending or terminating the other Party's access to its pre-ordering and ordering OSS, and the provisioning of pending and existing services. All such information obtained through an audit shall be subject to the terms of the Proprietary and Confidential Information section in the General Terms and Conditions of this Agreement.

2.3 <u>Ordering</u>

2.3.1 AT&T will make available to TWTC electronic interfaces for the purpose of exchanging order information, including order status and completion notification, for non-complex and certain complex resale requests and certain network elements. Specifications for access and use of AT&T's electronic interfaces are set forth at AT&T's Interconnection Web site. The process by which the Parties will manage these electronic interfaces to include the development and introduction of new interfaces will be governed by the change management process as described in Section 2.7 below.

2.3.2 The Parties shall place orders for services by submitting an LSR to the other Party. AT&T shall bill TWTC an electronic service order charge at the rate set forth in the applicable Attachment to this Agreement for each LSR submitted by means of an electronic interface. AT&T shall bill TWTC a manual service order charge at the rate set forth in the applicable Attachment to this Agreement for each LSR submitted by means other than the electronic Interfaces (e.g., mail, fax, courier,

etc.). TWTC shall bill AT&T a single manual OSS charge per LSR associated with the port-back of a telephone number to AT&T's switch as set forth in Exhibit A to Attachment 7 of this Agreement until such time as electronic ordering is provided by TWTC to AT&T. At such time, the applicable electronic OSS charge as set forth in Exhibit A to Attachment 7 of this Agreement would apply. To the extent TWTC performs another OSS function for AT&T that AT&T performs for TWTC pursuant to this Agreement, the Parties shall amend this Agreement to include such function subject to the same rates, terms and conditions that apply to AT&T under this Agreement. An individual LSR will be identified for billing purposes by its PON.

2.3.2.1 TWTC may submit an LSR to request that a customer's service be temporarily suspended, denied, or restored. Alternatively, TWTC may submit a list of such customers if TWTC provides a separate PON for each location on the list. AT&T will bill an electronic or manual service order charge for each location.

2.3.2.2 The Parties will bill the electronic or manual service order charge, as applicable, for an LSR, regardless of whether that LSR is later supplemented, clarified or cancelled.

2.3.2.3 Notwithstanding the foregoing, the Parties will not bill an additional electronic or manual service order charge for supplements to any LSR submitted to clarify, correct, change or cancel a previously submitted LSR.

2.3.2.4 AT&T shall return to TWTC a Firm Order Confirmation (FOC) or LSR clarification in accordance with the applicable performance intervals referenced in Attachment 9. TWTC shall provide to AT&T an FOC within twenty-four (24) hours of the receipt from AT&T of a complete and accurate LSR, exclusive of Saturdays, Sundays and holidays. TWTC shall provide to AT&T an LSR clarification within twenty-four (24) hours of the receipt from AT&T of an incomplete and inaccurate LSR, exclusive of Saturdays, Sundays and holidays.

2.4 Provisioning

2.4.1 AT&T shall provision services during its regular working hours. To the extent TWTC requests provisioning of service to be performed outside AT&T's regular working hours, or the work so requested requires AT&T's technicians or project managers to work outside of regular working hours, overtime charges set forth in AT&T's intrastate Access Services Tariff, Section E13.2, shall apply. Notwithstanding the foregoing, if such work is performed outside of regular working hours by a AT&T technician or project manager during his or her scheduled shift and AT&T does not incur any overtime charges in performing the work on behalf of TWTC, AT&T will not assess TWTC additional charges beyond the rates and charges specified in this Agreement.

2.4.2 In the event AT&T must dispatch to the customer's location more than once due to incorrect or incomplete information provided by TWTC (e.g., incomplete address, incorrect contact name/number, etc.), AT&T will bill TWTC for each additional dispatch required to provision the circuit due to the incorrect/incomplete information provided. AT&T will assess the applicable Maintenance of Service rates from AT&T's FCC No. 1 Tariff, Section 13.3.1.

2.4.3 Cancellation Charges. If TWTC cancels an LSR for network elements or resold services subsequent to AT&T's generation of a service order, any costs incurred by AT&T in conjunction with provisioning of Services as requested on the cancelled LSR will be recovered in accordance with the cancellation methodology set forth in the Cancellation Charge Percentage Chart found on AT&T's Interconnection Web site. In addition, AT&T reserves the right to assess cancellation charges if TWTC fails to respond within nine (9) business days to a Missed Appointment order notification.

2.4.3.1 Notwithstanding the foregoing, if TWTC places an LSR based upon AT&T's loop makeup information, and such information is inaccurate resulting in the inability of AT&T to provision the network elements requested and another spare compatible facility cannot be found with the transmission characteristics of the network elements originally requested, cancellation charges described in this Section shall not apply. Where TWTC places a single LSR for multiple network elements or services based upon loop makeup information, and information as to some, but not all, of the network elements or services is inaccurate, if AT&T cannot provision the network elements or services that were the subject of the inaccurate loop makeup information, TWTC may cancel its request for those network elements or services without incurring cancellation charges as described in this Section. In such instance, should TWTC elect to cancel the entire LSR, cancellation charges as described in this Section shall apply to those elements and services that were not the subject of inaccurate loop makeup.

2.4.4 Service Date Advancement Charges (Expedites). For Service Date Advancement requests by either Party, Service Date Advancement charges as applicable will apply for intervals less than the standard interval as outlined in the AT&T Product and Services Interval Guide. The charges are as set forth in Exhibit A of Attachment 7 of this Agreement. AT&T proposes making this simplistically reciprocal. Currently, AT&T would only be requesting service date advancements on port-back orders. Therefore, the only circumstance that would really qualify currently under this provision from a TWTC reciprocal perspective would be TWTC's ability to charge AT&T the same SDA charge that AT&T would bill TWTC if TWTC requested an SDA for a port. This also assumes that TWTC operates under the same standard interval that AT&T provisions a port.

2.4.5 Order Modification Charges. If TWTC modifies an order after being sent a FOC from AT&T, the Order Modification Charge (OMC) or Order Modification

Charge Additional Dispatch (OMCAD) will be paid by TWTC in accordance with Exhibit A of Attachment 7.

2.5 Maintenance and Repair

2.5.1 AT&T will make available to TWTC electronic interfaces for the purpose of reporting and monitoring service troubles. Specifications for access and use of AT&T's maintenance and repair electronic interfaces are set forth at AT&T's Interconnection Web site. The process by which the Parties will manage these electronic interfaces to include the development and introduction of new interfaces will be governed by the change management process as described in Section 2.7 below. Requests for trouble repair are billed in accordance with the provisions of this Agreement. The Parties agree to adhere to AT&T's Operational Understanding. The Operational Understanding may be accessed via AT&T's Interconnection Web site.

2.5.2 If TWTC reports a trouble on a AT&T Network Element and no trouble is found in AT&T's network, AT&T will charge TWTC a Maintenance of Service Charge for any dispatching and testing (both inside and outside the CO) required by AT&T in order to confirm the working status. AT&T will assess the applicable Maintenance of Service rates from AT&T's FCC No. 1 Tariff, Section 13.3.1**.** If AT&T reports a trunk trouble on a TWTC Network Element and no trouble is found in TWTC's network, TWTC will charge AT&T a Maintenance of Service Charge for any dispatching and testing (both inside and outside the CO) required by TWTC in order to confirm the working status. TWTC will assess the applicable Maintenance of Service rates from TWTC's applicable tariff, price list or price posted on its web site. TWTC will identify the charge to AT&T as a Maintenance of Service charge and will agree to the reciprocal Billing Dispute process.

2.5.3 In the event AT&T must dispatch to the customer's location more than once due to incorrect or incomplete information provided by TWTC (e.g., incomplete address, incorrect contact name/number, etc.), AT&T will bill TWTC for each additional dispatch required to repair the circuit due to the incorrect/incomplete information provided. AT&T will assess the applicable Maintenance of Service rates from AT&T's FCC No. 1 Tariff, Section 13.3.1.

2.6 Billing. AT&T will provide to TWTC nondiscriminatory access to billing information as specified in Attachment 7.

2.7 Change Management. The Parties agree that the collaborative change management process known as the Change Control Process (CCP) will be used to manage changes to existing interfaces, introduction of new interfaces and retirement of interfaces. The Parties agree to comply with the provisions of the documented CCP as may be amended from time to time and incorporated herein

by reference. The change management process will cover changes to AT&T's electronic interfaces, AT&T's testing environment, associated manual process improvements, and relevant documentation. The process will define a procedure for resolution of change management disputes. Documentation of the CCP as well as related information and processes will be clearly organized and readily accessible to TWTC at AT&T's Interconnection Web site.

2.8 Rates. Unless otherwise specified herein, AT&T shall bill TWTC charges for the use of AT&T's OSS, and other charges applicable to pre-ordering, ordering, provisioning and maintenance and repair, at the rates, terms and conditions as set forth in Exhibit A to Attachment 7 of this Agreement.

2.9 The Commissions in some states have ordered per element manual additive nonrecurring charges for Network Elements and Other Services ordered by means other than one of the interactive interfaces. These ordered Network Elements and Other Services manual additive nonrecurring charges will apply in these states, rather than the charge per LSR. The per-element charges are listed in Exhibit A of Attachment 7 of this Agreement.

3. Miscellaneous

3.1 Pending Orders. To the extent that the ordering Party submits an LSR with incomplete, incorrect or conflicting information, the other Party will return the LSR to the ordering Party for clarification. The ordering Party shall respond to the request for clarification within thirty (30) days by submitting a supplemental LSR. If the ordering Party does not submit a supplement LSR within thirty (30) days, the other Party will cancel the original LSR and the ordering Party shall be required to submit a new LSR, with a new PON.

3.2 Single Point of Contact. TWTC will be the single point of contact with AT&T for ordering activity for network elements and other services used by TWTC to provide services to its customers, except that AT&T may accept a request directly from another CLEC, or AT&T, acting with authorization of the affected customer. TWTC and AT&T shall each execute a blanket LOA with respect to customer requests so that prior proof of customer authorization will not be necessary with every request (except in the case of a local service freeze). The Parties shall each be entitled to adopt their own internal processes for verification of customer authorization for requests, provided, however, that such processes shall comply with applicable state and federal law and industry and regulatory guidelines. Pursuant to a request from another carrier, AT&T may disconnect any network element being used by TWTC to provide service to that customer and may reuse such network elements or facilities to enable such other carrier to provide service to the customer. AT&T will notify TWTC that such a request has been processed but will not be required to notify TWTC in advance of such processing.

3.2.1 Neither Party shall prevent or delay a customer from migrating to another carrier because of unpaid bills, denied service, or contract terms.

3.2.2 Use of Facilities. When a customer of TWTC elects to discontinue service and to transfer service to another local exchange carrier, including AT&T, AT&T shall have the right to reuse the facilities provided to TWTC by AT&T. In addition, where AT&T provides local switching, AT&T may disconnect and reuse facilities when the facility is in a denied state and AT&T has received a request to establish new service or transfer service from a customer or from a CLEC. AT&T will notify TWTC that such a request has been processed after the disconnect order has been completed.

3.3 Contact Numbers. The Parties agree to provide one another with toll-free nation-wide (50 states) contact numbers for the purpose of ordering, provisioning and maintenance of services. Contact numbers for maintenance/repair of services shall be staffed twenty-four (24) hours per day, seven (7) days per week. AT&T will close trouble tickets after making a reasonable effort to contact TWTC for authorization to close a ticket. AT&T will place trouble tickets in delayed maintenance status after making a reasonable effort to contact TWTC to request additional information or to request authorization for additional work deemed necessary by AT&T.

3.4 Subscription Functions. In cases where AT&T performs subscription functions for an interexchange carrier (IXC) (i.e., Preferred Interexchange Carrier, or PIC, and Local Preferred Interexchange Carrier, or LPIC, changes via Customer Account Record Exchange (CARE)), AT&T will in all possible instances provide the affected IXCs with the Operating Company Number (OCN) of the local provider for the purpose of obtaining customer billing account and other customer information required under subscription requirements.

3.4.1 When TWTC's customer, served by resale or loop and port combinations, changes its PIC or LPIC, and per AT&T's FCC or state tariff the IXC elects to charge the customer the PIC or LPIC change charge, AT&T will bill the PIC or LPIC change charge to TWTC, which has the billing relationship with that customer, and TWTC may pass such charge to the customer.

Attachment 7

Billing

TABLE OF CONTENTS

1. PAYMENT AND BILLING ARRANGEMENTS 3

2. BILLING DISPUTES 8

3. REVENUE ACCOUNTING OFFICE (RAO) HOSTING 9

BILLING

1. PAYMENT AND BILLING ARRANGEMENTS

The terms and conditions set forth in this Attachment shall apply to all services ordered and provisioned pursuant to this Agreement.

1.1 AT&T will bill through the Carrier Access Billing System (CABS), Integrated Billing System (IBS) and/or the Customer Records Information Systems (CRIS) depending on the particular service(s) provided to TWTC under this Agreement. AT&T will format all bills in CABS Billing Output Specification (CBOS) Standard or CLUB/EDI format, depending on the type of service provided. For those services where standards have not yet been developed, AT&T's billing format may change in accordance with applicable industry standards.

1.1.1 For any service(s) AT&T receives from TWTC, TWTC shall bill AT&T in CABS/SECABS format.

1.1.2 Any switched access charges associated with interexchange carrier access to the resold local exchange lines will be billed by, and due to AT&T.

1.1.3 The Parties will render bills each month on established bill days for each of the other Party's accounts. If either Party requests multiple billing media or additional copies of the bills, the billing Party will provide these at the rates set forth in AT&T's FCC No. 1 Tariff, Section 13.3.6.3, except for resold services provided by AT&T which shall be at the rates set forth in AT&T's Non-Regulated Services Pricing List N6.

1.1.4 The Parties will bill each other in advance for all respective services to be provided during the ensuing billing period except charges associated with service usage and nonrecurring charges, which will be billed in arrears.

1.1.4.1 For resold services, charges for services will be calculated on an individual End User account level, including, if applicable, any charge for usage or usage allowances. AT&T will also bill TWTC, and TWTC will be responsible for and remit to AT&T, all charges applicable to said services including but not limited to 911 and E911 charges, End Users common line charges, federal subscriber line charges, telecommunications relay charges, and franchise fees, unless otherwise ordered by a Commission.

1.1.5 The Parties will not perform billing and collection services for either Party as a result of the execution of this Agreement.

1.2 <u>Establishing Accounts.</u> After submitting a credit profile and deposit, if required, and after receiving certification as a local exchange carrier from the appropriate Commission, TWTC will provide the appropriate AT&T advisory team/local contract manager the necessary documentation to enable AT&T to establish

accounts for Local Interconnection, Network Elements and Other Services and/or resold services. Such documentation shall include the Application for Master Account, if applicable, proof of authority to provide telecommunications services, the appropriate Operating Company Numbers (OCN) for each state as assigned by the National Exchange Carriers Association (NECA), Carrier Identification Code (CIC), if applicable, Access Customer Name and Abbreviation (ACNA), if applicable, Blanket Letter of Authorization (LOA), Misdirected Number form, and a tax exemption certificate, if applicable. Notwithstanding anything to the contrary in this Agreement, TWTC may not order services under a new account established in accordance with this Section 1.2 until thirty (30) days after all information specified in this Section 1.2 is received from TWTC.

1.2.1 Company Identifiers. If TWTC needs change, add to, eliminate or convert its OCNs, ACNA(s) or other identifying codes ("Company Identifiers") under which it operates when TWTC has already been conducting business utilizing those Company Identifiers, TWTC shall bear all costs incurred by AT&T to convert TWTC to the new Company Identifiers. Company Identifiers conversion charges include the time required to make system updates to all of TWTC's customer records and will be handled in a separately negotiated agreement.

1.2.2 Tax Exemption. It is the responsibility of TWTC to provide AT&T with a properly completed tax exemption certificate at intervals required by the appropriate taxing authorities. A tax exemption certificate must be supplied for each individual TWTC entity purchasing Services under this Agreement. Upon AT&T's receipt of a properly completed tax exemption certificate, subsequent billings to TWTC will not include those taxes or fees from which TWTC is exempt. Prior to receipt of a properly completed exemption certificate, AT&T shall bill, and TWTC shall pay all applicable taxes and fees. In the event that TWTC believes that it is entitled to an exemption from and refund of taxes with respect to the amount billed prior to AT&T's receipt of a properly completed exemption certificate, AT&T shall assign to TWTC its rights to claim a refund of such taxes. If applicable law prohibits the assignment of tax refund rights or requires the claim for refund of such taxes to be filed by AT&T, AT&T shall, after receiving a written request from TWTC and at TWTC's sole expense, pursue such refund claim on behalf of TWTC, provided that TWTC promptly reimburses AT&T for any costs and expenses incurred by AT&T in pursuing such refund claim, and provided further that AT&T shall have the right to deduct any such outstanding costs and expenses from the amount of any refund obtained prior to remitting such refund to TWTC. TWTC shall be solely responsible for the computation, tracking, reporting and payment of all taxes and fees associated with the services provided by TWTC to its End Users.

1.3 Deposit Policy:

1.3.1 Credit Analysis. TWTC shall complete the AT&T Credit Profile and provide information to AT&T regarding credit worthiness. AT&T shall utilize a

commercially acceptable credit scoring tool applied in a commercially reasonable manner to determine TWTC's credit worthiness. The credit scoring tool utilized may consider: number of years in business; management history; liens, suits and judgments; payment history with third parties; payment history with AT&T (on undisputed amounts); publicly available information. AT&T will use a commercially acceptable financial scoring tool applied in a commercially reasonable manner to consider financial data evidencing the degree of financial stability including but not limited to: debt ratings; debt performance; net worth; cash flow; debt/net worth; profitability and financial statements, if available. AT&T may consider other data made available to AT&T by TWTC. Using the data, tools and analysis described above, AT&T will determine in a commercially reasonable manner whether TWTC represents a credit risk and whether a deposit is required to secure TWTC's account. AT&T shall provide in writing its reasons for requesting a deposit to TWTC upon written request.

1.3.2 Deposit Amounts and Interest. If, in the reasonable discretion of AT&T, circumstances so warrant and/or gross monthly billing has materially increased with respect to the level initially used to determine the level of security deposit, AT&T reserves the right to request additional security. The total of initial and additional security deposits collected under this Section shall not exceed two months' estimated billing. Estimated billings are calculated based upon the monthly average of the previous six (6) months current billings, if TWTC has received service from AT&T during such period at a level comparable to that anticipated to occur over the next six (6) months. If either TWTC or AT&T has reason to believe that the level of service to be received during the next six (6) months will be materially higher or lower than received in the previous six (6) months, TWTC and AT&T shall agree on a level of estimated billings based on all relevant information.

Such security deposit shall take the form of cash, or an annually renewable Irrevocable Letter of Credit, or Surety Bond, at TWTC's sole option, provided that the documents are on the AT&T form. Interest on a security deposit, if provided in cash, shall accrue and be paid in accordance with the appropriate AT&T Tariff. In the event TWTC fails to provide AT&T with a suitable form of security deposit or additional security deposit as required herein, defaults on its account(s), or otherwise fails to make any payment or payments required under this Agreement in the manner and within the time required, service to TWTC may be Suspended, Discontinued or Terminated in accordance with the terms of Section 1.5 below.

1.3.3 Payments. TWTC shall pay any applicable deposit within thirty (30) days following written notice that a deposit is required pursuant to this Section. Any such security deposit shall in no way release TWTC from its obligation to make complete and timely payments of undisputed bills. In the event TWTC defaults on its account, service to TWTC will be terminated and any security deposits will be applied to

TWTC's account. Requests for security deposits pursuant to this Section 1.3 shall constitute an amount billed by AT&T pursuant to this Agreement, and payment of the deposit shall be subject to the remainder of the provisions of this Attachment.

1.3.4 Refund. After TWTC has established a consecutive twelve (12) month history of prompt payment and provided that a new credit analysis indicates that TWTC is no longer a credit risk, or upon the expiration of this Agreement, whichever is earlier, the deposit, plus accrued interest if applicable, will be returned to TWTC; provided, however, that in the event AT&T is holding a security deposit under this Agreement at the time the Parties enter into a Subsequent Agreement containing a provision for payment of deposits, AT&T may continue to hold the deposit under the Subsequent Agreement to the extent provided in such Subsequent Agreement.

1.3.5 At least sever (7) days prior to the expiration of any Letter of Credit provided by TWTC as security under this Agreement, TWTC shall renew such Letter of Credit or provide AT&T with evidence that TWTC has obtained a suitable replacement for the Letter of Credit. If TWTC fails to comply with the foregoing, AT&T shall thereafter be authorized to draw down the full amount of such Letter of Credit and utilize the case proceeds as security for TWTC accounts(s). If TWTC provides a security deposit or additional security deposit in the form of a surety bond as required herein, TWTC shall renew the surety bond or provide AT&T with evidence that TWTC has obtained a suitable replacement for the surety bond at least (7) days prior to the cancellation date of the surety bond. If TWTC fails to comply with the foregoing, AT&T shall thereafter be authorized to take action on the surety bond and utilize the cash proceeds as security for TWTC's account(s). If the credit rating of any bonding company that has provided TWTC with a surety bond provided as security hereunder has fallen below B, AT&T will provide written notice to TWTC that TWTC must provide a replacement bond or other suitable security within fifteen (15) days of AT&T's written notice. If TWTC fails to comply with the foregoing, AT&T shall thereafter be authorized to take action on the surety bond and utilize the cash proceeds as security for TWTC's account(s). Notwithstanding anything contained in this Agreement to the contrary, AT&T shall be authorized to draw down the full amount of any Letter of Credit or take action on any surety bond provided by TWTC as security hereunder if TWTC defaults on its account(s) or otherwise fails to make any payment or payments required under this Agreement in the manner and within the time, as required herein.

1.4 Payment Responsibility. Payment of all charges will be the responsibility of the billed Party. The billed Party shall pay invoices by utilizing wire transfer services or automatic clearing house services. The billed Party shall make payment to the billing Party for all services billed for undisputed charges. The billing Party will not become involved in billing disputes that may arise between the billed Party and the billed Parties' End User.

1.4.1 Payment Due. Payment for services provided by the billing Party, excluding disputed charges, is due on or before the next bill date. Information required to apply payments must accompany the payment. The information must notify the billing Party of Billing Account Numbers (BAN) paid; invoices paid and the amount to be applied to each BAN and invoice (Remittance Information). Payment is considered to have been made when the payment and Remittance Information are received by the billing Party. If the Remittance Information is not received with payment, the billing Party will be unable to apply amounts paid to the billed Parties' accounts. In such event, the billing Party shall hold such funds until the Remittance Information is received. If the billing Party does not receive the Remittance Information by the payment due date for any account(s), late payment charges shall apply.

1.4.1.1 Due Dates. If the payment due date falls on a Sunday or on a holiday that is observed on a Monday, the payment due date shall be the first non-holiday day following such Sunday or holiday. If the payment due date falls on a Saturday or on a holiday which is observed on Tuesday, Wednesday, Thursday, or Friday, the payment due date shall be the last non-holiday day preceding such Saturday or holiday. If payment is not received by the payment due date, a late payment charge, as set forth in Section 1.4.1.2, below, shall apply.

1.4.1.2 Late Payment. If any portion of the payment is not received by the other Party on or before the payment due date as set forth preceding, or if any portion of the payment is received in funds that are not immediately available, then a late payment and/or interest charge shall be due. The late payment and/or interest charge shall apply to the portion of the payment not received and shall be assessed at the billing Party's applicable tariff or price list, or in the absence of such tariff or price listed rate, then at a rate not to exceed one and one half percent (1.5%). In addition to any applicable late payment and/or interest charges, each Party may be charged a fee by the other Party for all returned checks at the rate set forth in Section A2 of the General Subscriber Services Tariff or pursuant to the applicable state law.

1.5 Termination of Services on Default. The procedures for the termination of services on default are as follows:

1.5.1 Either Party may, in its sole discretion, suspend or terminate any of the services described and provided to the other Party pursuant to the terms of this Agreement for failure to make timely payments of any undisputed amount due and owing hereunder; or in the event of prohibited, unlawful or improper use of the other party's facilities or services. Notwithstanding any provision to the contrary in this Section 1.5, all billing disputes shall be resolved pursuant to Section 2 of this Attachment rather than pursuant to this Section.

1.5.2 All payments on account shall be due and owing when received and shall become delinquent on the same day of the following month after the original bill day. At such time as any amount owed hereunder shall become delinquent, the Party

seeking payment may provide written notice to the delinquent Party that additional applications for service will be refused and that any pending orders for service will not be completed if payment is not received within fifteen (15) days following the date of the notice. In addition, the Party seeking payment may, at the same time, give written notice to the delinquent Party that existing services may be discontinued if payment is not received within thirty (30) days from the date of such notice.

1.5.3 Upon discontinuance of services in accordance with this paragraph 1.5, all billed charges and applicable termination charges shall become immediately due and payable.

1.5.4 If either Party fails to exercise its right to discontinue any services in accordance with this paragraph 1.5 within the timeframes described in paragraph 1.5.2, such failure shall not be construed as a waiver, and services may be discontinued without further notice at any time thereafter.

1.5.5 The Parties acknowledge that discontinuance of service pursuant to this paragraph 1.5 may result in discontinuance of service to the end user customer of the Party whose services have been terminated. The end user customer's service provider is solely responsible for notifying the end user customer of the service discontinuance. TWTC is solely responsible for notifying the end user of the proposed service disconnection. If within fifteen (15) days after TWTC has been denied and no arrangements to reestablish service have been made consistent with this subsection, TWTC's service will be disconnected.

1.6 Notices. Notwithstanding anything to the contrary in this Agreement, all notices regarding billing matters and rejection of additional orders from TWTC, shall be forwarded to the individual and/or address designated by TWTC in the Notices provision of the General Terms and Conditions of this Agreement The notice of discontinuance of services purchased by TWTC under this Agreement provided for in Section 1.5 of this Attachment and notices of disconnection of services for nonpayment of charges shall be sent via certified mail to the individual(s) listed in the Notices provision of the General Terms and Conditions of this Agreement.

2. BILLING DISPUTES

2.1 AT&T and TWTC shall electronically submit all billing disputes to each other using the OBF approved RF1461 BAR form or as otherwise mutually agreed upon form by AT&T and TWTC. In the event of a billing dispute, the Parties will endeavor to resolve the dispute within sixty (60) days of the notification date. Within five (5) business days of AT&T's denial, or partial denial, of the billing dispute, if TWTC is not satisfied with AT&T's resolution of the billing dispute or if no response to the billing dispute has been received by TWTC by such sixtieth (60th) day, TWTC must pursue the escalation process as outlined in the Billing Dispute Escalation Matrix, set forth on AT&T's Interconnection Services Web

site, or the billing dispute shall be considered denied and closed. If, after escalation, the Parties are unable to reach resolution, then the aggrieved Party, if it elects to pursue the dispute shall pursue dispute resolution in accordance with the General Terms and Conditions of this Agreement.

2.2 For purposes of this Section 2, a billing dispute means a reported dispute submitted pursuant to Section 2.1 of a specific amount of money actually billed by AT&T. The billing dispute must be clearly explained by TWTC and supported by written documentation, which clearly shows the basis for disputing charges. The determination as to whether the billing dispute is clearly explained or clearly shows the basis for disputing charges shall be within AT&T's sole reasonable discretion. Disputes that are not clearly explained or those that do not provide complete information may be rejected by AT&T. Claims by TWTC for damages of any kind will not be considered a billing dispute for purposes of this Section. If AT&T resolves the billing dispute, in whole or in part, in favor of TWTC, any credits and interest due to TWTC as a result thereof shall be applied to TWTC's account by AT&T upon resolution of the billing dispute.

2.3 Notwithstanding anything to the contrary in this Section 2, no billing dispute shall be valid unless notice of such dispute is provided within one (1) year after the disputed amounts were billed, subject to the exceptions set forth in Section 27 of the General Terms and Conditions of this Agreement.

3. REVENUE ACCOUNTING OFFICE (RAO) HOSTING

3.1 Centralized Message Distribution System (CMDS) is a national message exchange system administered by Telcordia Technologies ("Telcordia") used to transmit alternately billed calls (e.g., credit card, third number and collect) from the Earning Company, as defined herein, to the Billing Company, as defined herein, to permit the Earning Company and the Billing Company to receive appropriate compensation. It is also used to transmit access records from one company to another.

3.2 Direct Participants are Telecommunications carriers that exchange data directly with other Direct Participants via the CMDS Data Center and may act as host companies ("Host") for those Telecommunications carriers that do not exchange data directly via the CMDS Data Center ("Indirect Participants").

3.3 Revenue Accounting Office (RAO) Hosting is a hosting relationship where an Indirect Participant sends and receives CMDS eligible messages to and from its Host, who then interfaces, on behalf of the Indirect Participant, with other Direct Participants for distribution and collection of these messages. RAO Hosting also includes the Direct Participant's provision of revenue settlements functions (compensation) for alternately billed calls based upon reports generated by Credit Card and Third Number Settlement (CATS) and Non-InterCompany Settlement

(NICS) as described herein. CATS and NICS are collectively referred to as Intercompany Settlements.

3.4 The CATS System is a national system administered by Telcordia, used to settle revenues for calls that are sent from one CMDS Direct Participant to another for billing. CATS applies to calls that originate within one Regional Bell Operating Company's (RBOC) territory, as defined at Divestiture, and bill in another RBOC's territory. CATS calculates the amounts due to Earning Companies (i.e. billed revenue less the billing and collection fee). For alternately billed calls, the originating company, whose facilities are used to place the call, is the Earning Company and the company that puts the charges on the End User's bill is the Billing Company

3.5 The Non-InterCompany Settlement (NICS) System is the national system administered by Telcordia that is used in the settlement of revenues for calls that are originated and billed by two different local exchange carriers (LEC) within a single Direct Participant's territory to another for billing. NICS applies to calls involving another LEC where the Earning Company and the Billing Company are located within AT&T's territory.

3.6 RAO Hosting, CATS and NICS services provided to TWTC by AT&T will be in accordance with the methods and practices regularly applied by AT&T to its own operations during the term of this Agreement, including such revisions as may be made from time to time by AT&T.

3.7 TWTC shall furnish all relevant information required by AT&T for the provision of RAO Hosting, CATS and NICS.

3.8 Charges or credits, as applicable, will be applied by AT&T to TWTC on a monthly basis in arrears. Amounts due (excluding adjustments) are due on or before the next bill date.

3.9 TWTC must have its own unique hosted RAO code. Where AT&T is the selected CMDS interfacing host, TWTC must request that AT&T establish a unique hosted RAO code for TWTC. Such request shall be in writing to the AT&T RAO Hosting coordinator and must be submitted at least eight (8) weeks prior to provision of services pursuant to this Section. Services shall commence on a date mutually agreed by the Parties.

3.10 AT&T will receive messages from TWTC that are to be processed by AT&T, another Local Exchange Carrier (LEC) in the AT&T region or a LEC outside the AT&T region. TWTC shall send all messages to AT&T no later than sixty (60) days after the message date.

3.11 AT&T will perform invoice sequence checking, standard Exchange Message Interface (EMI) format editing, and balancing of message data with the EMI trailer record counts on all data received from TWTC.

3.12 All data received from TWTC that is to be processed or billed by another LEC within the AT&T region will be distributed to that LEC in accordance with the Agreement(s) in effect between AT&T and the involved LEC.

3.13 All data received from TWTC that is to be placed on the CMDS network for distribution outside the AT&T region will be handled in accordance with the agreement(s) in effect between AT&T and its connecting contractor.

3.14 AT&T will receive messages from the CMDS network that are destined to be processed by TWTC and will forward them to TWTC on a daily basis for processing.

3.15 Transmission of message data between AT&T and TWTC will be distributed via Secure File Transfer Protocol (FTP) mailbox. It will be created on a daily basis Monday through Friday, except holidays. Details such as dataset name and delivery schedule will be addressed during negotiations of the distribution medium. If AT&T determines the Secure FTP Mailbox is nearing capacity levels, AT&T may move TWTC to CONNECT:Direct file delivery.

3.15.1 If TWTC is moved to CONNECT:Direct, data circuits (private line or dial-up) may be required between AT&T and TWTC for the purpose of data transmission. Where a dedicated line is required, TWTC will be responsible for ordering the circuit, overseeing its installation and coordinating the installation with AT&T. TWTC will also be responsible for any charges associated with this line. Equipment required on the AT&T end to attach the line to the mainframe computer and to transmit successfully ongoing will be negotiated on an individual case basis. Where a dial-up facility is required, dial circuits will be installed in the AT&T data center by AT&T and the associated charges assessed to TWTC. Additionally, all message toll charges associated with the use of the dial circuit by TWTC will be the responsibility of TWTC. Associated equipment on the AT&T end, including a modem, will be negotiated on an individual case basis between the Parties. All equipment, including modems and software, that is required on the TWTC end for the purpose of data transmission will be the responsibility of TWTC.

3.15.2 If TWTC utilizes Secure File Transfer Protocol for data file transmission, purchase of the Secure File Transfer Protocol software will be the responsibility of TWTC.

3.16 All messages and related data exchanged between AT&T and TWTC will be EMI formatted records and packed between appropriate EMI header and trailer records in accordance with accepted industry standards.

3.17 TWTC will maintain recorded message detail necessary to recreate files provided to AT&T for a period of three (3) calendar months beyond the related message dates.

3.18 Should it become necessary for TWTC to send data to AT&T more than sixty (60) days past the message date(s), TWTC will notify AT&T in advance of the transmission of the data. AT&T will work with its connecting contractor and/or TWTC, where necessary, to notify all affected LECs.

3.19 In the event that data to be exchanged between the two Parties should become lost or destroyed, the Party responsible for creating the data will make every effort to restore and retransmit such data.

3.20 Should an error be detected by the EMI format edits performed by AT&T on data received from TWTC, the entire pack containing the affected data will not be processed by AT&T. AT&T will notify TWTC of the error. TWTC will correct the error(s) and will resend the entire pack to AT&T for processing. In the event that an out-of-sequence condition occurs on subsequent packs, TWTC will resend these packs to AT&T after the pack containing the error has been successfully reprocessed by AT&T.

3.21 In association with message distribution service, AT&T will provide TWTC with associated intercompany settlements reports (CATS and NICS) as appropriate.

3.22 Notwithstanding anything in this Agreement to the contrary, in no case shall either Party be liable to the other for any direct or consequential damages incurred as a result of the obligations set out in this Section 3.

3.23 Intercompany Settlements Messages

3.23.1 Intercompany Settlements Messages facilitate the settlement of revenues associated with traffic originated from or billed by TWTC as a facilities based provider of local exchange telecommunications services.

3.23.2 AT&T will receive the monthly NICS and CATS reports from Telcordia on behalf of TWTC and will distribute copies of these reports to TWTC on a monthly basis.

3.23.3 Through CATS, AT&T will collect the revenue earned by TWTC from the RBOC in whose territory the messages are billed, less a per message billing and collection fee of five cents ($0.05), or such other amount as may be approved by the Direct Participants and Telcordia, on behalf of TWTC. AT&T will remit the revenue billed by TWTC to the RBOC in whose territory the messages originated, less a per message billing and collection fee of five cents ($0.05), or such other amount as may be approved by the Direct Participants and Telcordia, on behalf of TWTC. These two amounts will be netted together by AT&T and the resulting charge or credit issued to TWTC via a Carrier Access Billing System (CABS) miscellaneous bill on a monthly basis in arrears.

3.23.4 Through NICS, AT&T will collect the revenue earned by TWTC within the AT&T territory from another LEC also within the AT&T territory (NICS) where the messages are billed, less a per message billing and collection fee of five cents ($0.05), on behalf of TWTC. AT&T will remit the revenue billed by TWTC within the AT&T region to the LEC also within the AT&T region, where the messages originated, less a per message billing and collection fee of five cents ($0.05). These two amounts will be netted together by AT&T and the resulting charge or credit issued to TWTC via a CABS miscellaneous bill on a monthly basis in arrears.

3.23.5 AT&T and TWTC agree that monthly netted amounts of less than fifty dollars ($50.00) will not be settled.

Attachment 8

Rights-of-Way, Conduits and Pole Attachments

Rights-of-Way, Conduits and Pole Attachments

AT&T will provide nondiscriminatory access to any pole, duct, conduit, or right-of-way owned or controlled by AT&T pursuant to 47 U.S.C. § 224, as amended by the Act, pursuant to terms and conditions of a separate license agreement negotiated with AT&T.

Attachment 9

Performance Measurements

PERFORMANCE MEASUREMENTS

Upon a particular Commission's issuance of an Order pertaining to Performance Measurements in a proceeding expressly applicable to all CLECs generally, AT&T shall implement in that state such Performance Measurements as of the date specified by the Commission. Performance Measurements that have been Ordered in a particular state can currently be accessed via the internet at http://pmap.bellsouth.com.

Attachment 10

AT&T Disaster Recovery Plan

CONTENTS

PAGE

1.0	Purpose	2
2.0	Single Point of Contact	2
3.0	Identifying the Problem	2
3.1	Site Control	3
3.2	Environmental Concerns	4
4.0	The Emergency Control Center (ECC)	4
5.0	Recovery Procedures	5
5.1	CLEC Outage	5
5.2	AT&T Outage	5
5.2.1	Loss of Central Office	6
5.2.2	Loss of a Central Office with Serving Wire Center Functions	6
5.2.3	Loss of a Central Office with Tandem Functions	6
5.2.4	Loss of a Facility Hub	7
5.3	Combined Outage (CLEC and AT&T Equipment)	7
6.0	T1 Identification Procedures	7
7.0	Acronyms	8

1.0 PURPOSE

In the unlikely event of a disaster occurring that affects AT&T's long-term ability to deliver traffic to a Competitive Local Exchange Carrier (CLEC), general procedures have been developed by AT&T to hasten the recovery process in accordance with the Telecommunications Service Priority (TSP) Program established by the Federal Communications Commission to identify and prioritize telecommunication services that support national security or emergency preparedness (NS/EP) missions. A description of the TSP Program as it may be amended from time to time is available at the following website: http://interconnection.bellsouth.com/products/vertical/tsp.html. Since each location is different and could be affected by an assortment of potential problems, a detailed recovery plan is impractical. However, in the process of reviewing recovery activities for specific locations, some basic procedures emerge that appear to be common in most cases.

These general procedures should apply to any disaster that affects the delivery of traffic for an extended time period. Each CLEC will be given the same consideration during an outage, and service will be restored as quickly as possible.

This document will cover the basic recovery procedures that would apply to every CLEC.

2.0 SINGLE POINT OF CONTACT

When a problem is experienced, regardless of the severity, the AT&T Network Management Center (NMC) will observe traffic anomalies and begin monitoring the situation. Controls will be appropriately applied to insure the sanity of AT&T's network; and, in the event that a switch or facility node is lost, the NMC will attempt to circumvent the failure using available reroutes.

AT&T's NMC will remain in control of the restoration efforts until the problem has been identified as being a long-term outage. At that time, the NMC will contact AT&T's Emergency Control Center (ECC) and relinquish control of the recovery efforts. Even though the ECC may take charge of the situation, the NMC will continue to monitor the circumstances and restore traffic as soon as damaged network elements are revitalized.

The telephone number for the AT&T Network Management Center in Atlanta, as published in Telcordia's National Network Management Directory, is 404-321-2516.

3.0 IDENTIFYING THE PROBLEM

During the early stages of problem detection, the NMC will be able to tell which CLECs are affected by the catastrophe. Further analysis and/or first hand observation will determine if the disaster has affected CLEC equipment only, AT&T equipment only or a combination. The initial restoration activity will be largely determined by the equipment that is affected.

Once the nature of the disaster is determined and after verifying the cause of the problem, the NMC will initiate reroutes and/or transfers that are jointly agreed upon by the affected CLECs' Network Management Center and the AT&T NMC. The type and percentage of controls used will depend upon available network capacity. Controls necessary to stabilize the situation will be invoked and the NMC will attempt to re-establish as much traffic as possible.

For long-term outages, recovery efforts will be coordinated by the Emergency Control Center (ECC). Traffic controls will continue to be applied by the NMC until facilities are re-established. As equipment is made available for service, the ECC will instruct the NMC to begin removing the controls and allow traffic to resume.

3.1 SITE CONTROL

In the total loss of building use scenario, what likely exists will be a smoking pile of rubble. This rubble will contain many components that could be dangerous. It could also contain any personnel on the premises at the time of the disaster. For these reasons, the local fire marshal with the assistance of the police will control the site until the building is no longer a threat to surrounding properties and the companies have secured the site from the general public.

During this time, the majority owner of the building should be arranging for a demolition contractor to mobilize to the site with the primary objective of reaching the cable entrance facility for a damage assessment. The results of this assessment would then dictate immediate plans for restoration, both short term and permanent.

In a less catastrophic event, i.e., the building is still standing and the cable entrance facility is usable, the situation is more complex. The site will initially be controlled by local authorities until the threat to adjacent property has diminished. Once the site is returned to the control of the companies, the following events should occur.

An initial assessment of the main building infrastructure systems (mechanical, electrical, fire and life safety, elevators, and others) will establish building needs. Once these needs are determined, the majority owner should lead the building restoration efforts. There may be situations where the site will not be totally restored within the confines of the building. The companies must individually determine their needs and jointly assess the cost of permanent restoration to determine the overall plan of action.

Multiple restoration trailers from each company will result in the need for designated space and installation order. This layout and control is required to maximize the amount of restoration equipment that can be placed at the site, and the priority of placements.

Care must be taken in this planning to ensure other restoration efforts have logistical access to the building. Major components of telephone and building equipment will need to be removed and replaced. A priority for this equipment must also be jointly established to facilitate overall site restoration. (Example: If the AC switchgear has sustained damage, this would be of the highest priority in order to regain power, lighting, and HVAC throughout the building.)

If the site will not accommodate the required restoration equipment, the companies would then need to quickly arrange with local authorities for street closures, rights of way or other possible options available.

3.2 ENVIRONMENTAL CONCERNS

In the worse case scenario, many environmental concerns must be addressed. Along with the police and fire marshal, the state environmental protection department will be on site to monitor the situation.

Items to be concerned with in a large central office building could include:

1. Emergency engine fuel supply. Damage to the standby equipment and the fuel handling equipment could have created "spill" conditions that have to be handled within state and federal regulations.

2. Asbestos-containing materials that may be spread throughout the wreckage. Asbestos could be in many components of building, electrical, mechanical, outside plant distribution, and telephone systems.

3. Lead and acid. These materials could be present in potentially large quantities depending upon the extent of damage to the power room.

4. Mercury and other regulated compounds resident in telephone equipment.

5. Other compounds produced by the fire or heat.

Once a total loss event occurs at a large site, local authorities will control immediate clean up (water placed on the wreckage by the fire department) and site access.

At some point, the companies will become involved with local authorities in the overall planning associated with site clean up and restoration. Depending on the clean up approach taken, delays in the restoration of several hours to several days may occur.

In a less severe disaster, items listed above are more defined and can be addressed individually depending on the damage.

In each case, the majority owner should coordinate building and environmental restoration as well as maintain proper planning and site control.

4.0 THE EMERGENCY CONTROL CENTER (ECC)

The ECC is located in the Midtown 1 Building in Atlanta, Georgia. During an emergency, the ECC staff will convene a group of pre-selected experts to inventory the damage and initiate corrective actions. These experts have regional access to AT&T's personnel and equipment and will assume control of the restoration activity anywhere in the nine-state area.

In the past, the ECC has been involved with restoration activities resulting from hurricanes, ice storms and floods. They have demonstrated their capabilities during these calamities as well as

during outages caused by human error or equipment failures. This group has an excellent record of restoring service as quickly as possible.

During a major disaster, the ECC may move emergency equipment to the affected location, direct recovery efforts of local personnel and coordinate service restoration activities with the CLECs. The ECC will attempt to restore service as quickly as possible using whatever means is available, leaving permanent solutions, such as the replacement of damaged buildings or equipment, for local personnel to administer.

Part of the ECC's responsibility, after temporary equipment is in place, is to support the NMC efforts to return service to the CLECs. Once service has been restored, the ECC will return control of the network to normal operational organizations. Any long-term changes required after service is restored will be made in an orderly fashion and will be conducted as normal activity.

5.0 RECOVERY PROCEDURES

The nature and severity of any disaster will influence the recovery procedures. One crucial factor in determining how AT&T will proceed with restoration is whether or not AT&T's equipment is incapacitated. Regardless of whose equipment is out of service, AT&T will move as quickly as possible to aid with service recovery; however, the approach that will be taken may differ depending upon the location of the problem.

5.1 CLEC OUTAGE

For a problem limited to one CLEC (or a building with multiple CLECs), AT&T has several options available for restoring service quickly. For those CLECs that have agreements with other CLECs, AT&T can immediately start directing traffic to a provisional CLEC for completion. This alternative is dependent upon AT&T having concurrence from the affected CLECs.

Whether or not the affected CLECs have requested a traffic transfer to another CLEC will not impact AT&T's resolve to re-establish traffic to the original destination as quickly as possible.

5.2 AT&T OUTAGE

Because AT&T's equipment has varying degrees of impact on the service provided to the CLECs, restoring service from damaged AT&T equipment is different. The outage will probably impact a number of Carriers simultaneously. However, the ECC will be able to initiate immediate actions to correct the problem.

A disaster involving any of AT&T's equipment locations could impact the CLECs, some more than others. A disaster at a Central Office (CO) would only impact the delivery of traffic to and from that one location, but the incident could affect many Carriers. If the Central Office is a Serving Wire Center (SWC), then traffic from the entire area to those Carriers served from that switch would also be impacted. If the switch functions as an Access Tandem, or there is a tandem in the building, traffic from every CO to every CLEC could be interrupted. A disaster that destroys a facility hub could disrupt various traffic flows, even though the switching equipment may be unaffected.

The NMC would be the first group to observe a problem involving AT&T's equipment. Shortly after a disaster, the NMC will begin applying controls and finding re-routes for the completion of

as much traffic as possible. These reroutes may involve delivering traffic to alternate Carriers upon receiving approval from the CLECs involved. In some cases, changes in translations will be required. If the outage is caused by the destruction of equipment, then the ECC will assume control of the restoration.

5.2.1 Loss of a Central Office

When AT&T loses a Central Office, the ECC will

a) Place specialists and emergency equipment on notice;

b) Inventory the damage to determine what equipment and/or functions are lost;

c) Move containerized emergency equipment and facility equipment to the stricken area, if necessary;

d) Begin reconnecting service on a parity basis for Hospitals, Police and other emergency agencies or End Users served by AT&T or CLEC in accordance with the TSP priority restoration coding scheme entered in the AT&T Maintenance database immediately prior to the emergency.

5.2.2 Loss of a Central Office with Serving Wire Center Functions

The loss of a Central Office that also serves as a Serving Wire Center (SWC) will be restored as described in Section 5.2.1.

5.2.3 Loss of a Central Office with Tandem Functions

When AT&T loses a Central Office building that serves as an Access Tandem and as a SWC, the ECC will

a) Place specialists and emergency equipment on notice;

b) Inventory the damage to determine what equipment and/or functions are lost;

c) Move containerized emergency equipment and facility equipment to the stricken area, if necessary;

d) Begin reconnecting service on a parity basis for Hospitals, Police and other emergency agencies or End Users served by AT&T or CLEC in accordance with the TSP priority restoration coding scheme entered in the AT&T Maintenance database immediately prior to the emergency;

e) Re-direct as much traffic as possible to the alternate access tandem (if available) for delivery to those CLECs utilizing a different location as a SWC;

f) Begin aggregating traffic to a location near the damaged building. From this location, begin re-establishing trunk groups to the CLECs for the delivery of traffic normally found on the direct trunk groups. (This aggregation point may be the alternate access tandem location or another CO on a primary facility route.)

5.2.4 Loss of a Facility Hub

In the event that AT&T loses a facility hub, the recovery process is much the same as above. Once the NMC has observed the problem and administered the appropriate controls, the ECC will assume authority for the repairs. The recovery effort will include

a) Placing specialists and emergency equipment on notice;

b) Inventorying the damage to determine what equipment and/or functions are lost;

c) Moving containerized emergency equipment to the stricken area, if necessary;

d) Reconnecting service on a parity basis for Hospitals, Police and other emergency agencies or End Users served by AT&T or CLEC in accordance with the TSP priority restoration coding scheme entered in the AT&T Maintenance database immediately prior to the emergency; and

e) If necessary, AT&T will aggregate the traffic at another location and build temporary facilities. This alternative would be viable for a location that is destroyed and building repairs are required.

5.3 COMBINED OUTAGE (CLEC AND AT&T EQUIPMENT)

In some instances, a disaster may impact AT&T's equipment as well as the CLECs'. This situation will be handled in much the same way as described in Section 5.2.3. Since AT&T and the CLECs will be utilizing temporary equipment, close coordination will be required.

6.0 T1 IDENTIFICATION PROCEDURES

During the restoration of service after a disaster, AT&T may be forced to aggregate traffic for delivery to a CLEC. During this process, T1 traffic may be consolidated onto DS3s and may become unidentifiable to the Carrier. Because resources will be limited, AT&T may be forced to "package" this traffic entirely differently than normally received by the CLECs. Therefore, a method for identifying the T1 traffic on the DS3s and providing the information to the Carriers is required.

7.0 ACRONYMS

CLEC	-	Competitive Local Exchange Carrier
CO	-	Central Office (AT&T)
DS3	-	Facility that carries 28 T1s (672 circuits)
ECC	-	Emergency Control Center (AT&T)
NMC	-	Network Management Center
SWC	-	Serving Wire Center (AT&T switch)
T1	-	Facility that carries 24 circuits
TSP	-	Telecommunications Service Priority

Hurricane Information

During a hurricane, AT&T will make every effort to keep CLECs updated on the status of our network. Information centers will be set up throughout BellSouth Telecommunications. These centers are not intended to be used for escalations, but rather to keep the CLEC informed of network related issues, area damages and dispatch conditions, etc.

Hurricane-related information can also be found on line at http://www.interconnection.bellsouth.com/network/disaster/dis_resp.htm. Information concerning Mechanized Disaster Reports can also be found at this website by clicking on CURRENT MDR REPORTS or by going directly to http://www.interconnection.bellsouth.com/network/disaster/mdrs.htm.

BST Disaster Management Plan

AT&T maintenance centers have geographical and redundant communication capabilities. In the event of a disaster removing any maintenance center from service another geographical center would assume maintenance responsibilities. The contact numbers will not change and the transfer will be transparent to the CLEC.

Attachment 11

Bona Fide Request and New Business Request Process

BONA FIDE REQUEST AND NEW BUSINESS REQUEST PROCESS

1. BONA FIDE REQUEST

1.1 The Parties agree that TWTC is entitled to order any Network Element, interconnection option or service option required to be made available by FCC or Commission requirements pursuant to the Act. A Bona Fide Request (BFR) is to be used when TWTC makes a request of AT&T to provide a new or modified Network Element, interconnection option or other service option pursuant to the Act that was not previously provided for in this Agreement.

1.2 A BFR shall be submitted in writing by TWTC and shall specifically identify the requested service date, technical requirements, space requirements and/or such other specifications that clearly define the request such that AT&T has sufficient information to analyze and prepare a response. Such a request shall also include TWTC's designation of the request as being pursuant to the Telecommunications Act of 1996 (i.e. a BFR). The request shall be sent to TWTC's designated AT&T Sales contact or Local Contract Manager (LCM).

1.3 Within two (2) business days of receipt of a BFR, AT&T shall acknowledge in writing its receipt and identify a single point of contact responsible for responding to the BFR and shall request any additional information needed to process the request to the extent known at that time. Notwithstanding the foregoing, AT&T may reasonably request additional information from TWTC at any time during the processing of the BFR.

1.4 Within thirty (30) business days of AT&T's receipt of the BFR, if the preliminary analysis of the requested BFR is not of such complexity that it will cause AT&T to expend extraordinary resources to evaluate the BFR, AT&T shall respond to TWTC by providing a preliminary analysis of the new or modified Network Element or interconnection option not ordered by the FCC or Commission that is the subject of the BFR. The preliminary analysis shall either confirm that AT&T will offer access to the new or modified Network Element, interconnection option or service option or confirm that AT&T will not offer the new or modified Network Element, interconnection option or service option.

1.5 For any new or modified Network Element, interconnection option or service option not ordered by the FCC or Commission, if the preliminary analysis states that AT&T will offer the new or modified Network Element, interconnection option or service option, the preliminary analysis will include an estimate of the costs of utilizing existing resources, both personnel and systems, in the development including, but not limited to,

request parameters analysis, determination of impacted AT&T departments, determination of required resources, project management resources, etc. (Development Rate) including a general breakdown of such costs associated with the Network Element, interconnection option or service option and the date the request can be met. If the preliminary analysis states that AT&T will not offer the new or modified Network Element, interconnection option or service option, AT&T will provide an explanation of why the request is not technically feasible, does not qualify as a BFR for the new or modified Network Element, interconnection option or service option, should actually be submitted as a NBR or is otherwise not required to be provided under the Act. If AT&T cannot provide the Network Element, interconnection option or service option by the requested date, AT&T shall provide an alternative proposed date together with a detailed explanation as to why AT&T is not able to meet TWTC's requested date.

1.6 For any new or modified Network Element, interconnection option or service option not ordered by the FCC or Commission, if AT&T determines that the preliminary analysis of the requested BFR is of such complexity that it will cause AT&T to expend extraordinary resources to evaluate the BFR, AT&T shall notify TWTC within ten (10) business days of AT&T's receipt of BFR that a fee will be required prior to the preliminary evaluation of the BFR. Such fee shall be limited to AT&T's extraordinary expenses directly related to the complex request that require the allocation and engagement of additional resources above the existing allocated resources used on BFR cost development which include, but are not limited to, expenditure of funds to develop feasibility studies, specific resources that are required to determine request requirements (such as operation support system analysts, technical managers, software developers), software impact analysis by specific software developers; software architecture development, hardware impact analysis by specific system analysts, etc. and the request for such fee shall be accompanied with a general breakdown of such costs. If TWTC accepts the complex request evaluation fee proposed by AT&T, TWTC shall submit such fee within thirty (30) business days of AT&T's notice that a complex request evaluation fee is required. Within thirty (30) business days of AT&T's receipt of the complex request evaluation fee, AT&T shall respond to TWTC by providing a preliminary analysis, consistent with Section 1.4 of this Attachment 11.

1.7 TWTC may cancel a BFR at any time up until thirty (30) business days after receiving AT&T's preliminary analysis. If TWTC cancels the BFR within thirty (30) business days after receipt of AT&T's preliminary analysis, AT&T shall be entitled to keep any complex request evaluation fee submitted in accordance with Section 1.6 above, minus those costs

included in the fee that have not been incurred as of the date of cancellation.

1.8 TWTC will have thirty (30) business days from receipt of preliminary analysis to accept the preliminary analysis or cancel the BFR. If TWTC fails to respond within this thirty (30) business day period, the BFR will be deemed cancelled. Acceptance of the preliminary analysis must be in writing and accompanied by the estimated Development Rate for the new or modified Network Element, interconnection option or service option quoted in the preliminary analysis**.**

1.9 Notwithstanding any other provision of this Agreement, AT&T shall propose a firm price quote, including the firm Development Rate, the firm nonrecurring rate and the firm recurring rate, and a detailed implementation plan within ten (10) business days of receipt of TWTC's accurate BFR application for a Network Element, interconnection option or service option that is operational at the time of the request; thirty (30) business days of receipt of TWTC's accurate BFR application for a new or modified Network Element, interconnection option or service option ordered by the FCC or Commission; and within sixty (60) business days of receipt of TWTC's accurate BFR application for a new or modified Network Element, interconnection option or service option not ordered by the FCC or Commission or not operational at the time of the request. The firm nonrecurring rate will not include any of the Development Rate or the complex request evaluation fee, if required, in the calculation of this rate. Such firm price quote shall not exceed the estimate provided with the preliminary analysis by more than ten percent (10%).

1.10 TWTC shall have thirty (30) business days from receipt of firm price quote to accept or deny the firm price quote and submit any additional Development or nonrecurring rates quoted in the firm price quote.

1.11 Unless TWTC agrees otherwise, all prices shall be consistent with the applicable pricing principles and provisions of the Act.

1.12 If TWTC believes that AT&T's firm price quote is not consistent with the requirements of the Act, either Party may seek dispute resolution in accordance with the dispute resolution provisions set forth in the General Terms and Conditions of this Agreement.

1.13 Upon agreement to the rates, terms and conditions of a BFR, the Parties shall negotiate in good faith an amendment to this Agreement.

2 New Business Request

2.1 TWTC also shall be permitted to request the development of new or modified facilities or service options which may not be required by the Act. Procedures applicable to requesting the addition of such elements, services and options are specified in this Attachment 11. A New Business Request (NBR) is to be used by TWTC to make a request of AT&T for a new or modified feature or capability of an existing product or service, a new product or service that is not deployed within the AT&T network or operations and business support systems, or a new or modified service option that was not previously included in this Agreement (Requested NBR Services) and is not required by the Act.

2.2 An NBR shall be submitted in writing by TWTC and shall specifically identify the requested service date, technical requirements, space requirements and/or such specifications that clearly define the request such that AT&T has sufficient information to analyze and prepare a response. The request shall be sent to TWTC's designated AT&T Sales contact or LCM.

2.3 Within two (2) business days of receipt of an NBR, AT&T shall acknowledge in writing its receipt and identify a single point of contact responsible for responding to the NBR and shall request any additional information needed to process the request to the extent known at that time. Notwithstanding the foregoing, AT&T may reasonably request additional information from TWTC at any time during the processing of the NBR.

2.4 If the preliminary analysis of the request NBR is not of such complexity that it will cause AT&T to expend extraordinary resources to evaluate the NBR, within thirty (30) business days of its receipt of the NBR, AT&T shall respond to TWTC by providing a preliminary analysis of such Requested NBR Services that are the subject of the NBR. The preliminary analysis shall either confirm that AT&T will offer access to the Requested NBR Services or confirm that AT&T will not offer the Requested NBR Services.

2.5 If the preliminary analysis states that AT&T will offer the Requested NBR Services, the preliminary analysis will include an estimate of the Development Rate including a general breakdown of costs and the date the request can be met. If AT&T cannot provide the Requested NBR Service by the requested date, it shall provide an alternative proposed date together with a detailed explanation as to why AT&T is not able to meet TWTC's requested date.

2.6 If AT&T determines that the preliminary analysis of the requested NBR is of such complexity that it will cause AT&T to expend extraordinary resources to evaluate the NBR, AT&T shall notify TWTC within ten (10)

business days of AT&T's notice that a complex request evaluation fee is required prior to the evaluation of the NBR. Such fee shall be limited to AT&T's extraordinary expenses directly related to the complex request. If TWTC accepts the complex request evaluation fee amount proposed by AT&T, TWTC shall submit such complex request evaluation fee within thirty (30) business days of AT&T's notice that a complex request evaluation fee is required.

2.7 Within thirty (30) business days of AT&T's receipt of the complex request evaluation fee, AT&T shall respond to TWTC by providing a preliminary analysis of such Requested NBR Services.

2.8 TWTC may cancel an NBR at any time. If TWTC cancels the request more than ten (10) business days after submitting it, TWTC shall pay AT&T's reasonable and demonstrable costs of processing and/or implementing the NBR up to the date of cancellation in addition to any fee submitted in accordance with Section 1.6 above.

2.9 TWTC will have thirty (30) business days from receipt of the preliminary analysis to accept the preliminary analysis or cancel the NBR. If TWTC fails to respond within this thirty (30) business day period, the NBR will be deemed cancelled.

2.10 Acceptance of the preliminary analysis must be in writing and accompanied by the estimated Development Rate for the Requested NBR Services quoted in the preliminary analysis.

2.11 AT&T shall propose a firm price quote including the firm Development Rate, the firm nonrecurring rate, and the firm recurring rate, and a detailed implementation plan within ten (10) business days of receipt of TWTC's accurate NBR application for a Requested NBR Service that is operational at the time of the request and within sixty (60) business days of receipt of TWTC's accurate NBR application for the Requested NBR Services not operational at the time of the request. The firm nonrecurring rate will not include any of the Development Rate or the complex request evaluation fee, if required, in the calculation of this rate. Such firm price quote shall not exceed the estimate provided with the preliminary analysis by more than ten percent (10%).

2.12 TWTC shall have thirty (30) business days from receipt of the firm price quote to accept or deny the firm price quote and submit any additional nonrecurring, non-refundable fees quoted in the firm price quote. If the firm price quote is less than the preliminary analysis' estimate of the Development Rate, AT&T will credit TWTC's account for the difference.

2.13 Upon agreement to the rates, terms and conditions of a NBR, an amendment to this Agreement, or a separate agreement, may be required and the Parties shall negotiate such agreement or amendment in good faith.

Amendment to the Interconnection Agreement
Between
Time Warner Telecom of South Carolina LLC and
BellSouth Telecommunications, Inc.
d/b/a AT&T Alabama, AT&T Florida, AT&T Georgia,
AT&T Kentucky, AT&T Louisiana, AT&T Mississippi,
AT&T North Carolina, AT&T South Carolina and AT&T Tennessee
Dated December 02, 2007

This Amendment is entered into by and between Time Warner Telecom of South Carolina LLC (TWTC) and BellSouth Telecommunications, Inc d/b/a AT&T Alabama, AT&T Florida, AT&T Georgia, AT&T Kentucky, AT&T Louisiana, AT&T Mississippi, AT&T North Carolina, AT&T South Carolina and AT&T Tennessee ("AT&T") hereinafter referred to collectively as the "Parties," to amend that certain Interconnection Agreement between the Parties dated December 02, 2007("Interconnection Agreement") to be effective as of the date of the last signature to the amendment.

WHEREAS, TWTC has changed the name of said business to tw telecom of south carolina llc (tw telecom), a Delaware limited liability company.

WHEREAS, the Parties desire that the Interconnection Agreement be amended to reflect the correct entity name.

NOW, THEREFORE, in consideration of the mutual promises and covenants contained herein and other good and valuable consideration, the receipt and sufficiency of which are hereby acknowledged, the Parties hereby covenant and agree as follows:

1. The Parties agree that **AT&T-9STATE** shall be defined as the states of Alabama, Florida, Georgia, Kentucky, Louisiana, Mississippi, North Carolina, South Carolina and Tennessee.

2. The name of Time Warner Telecom of South Carolina LLC (TWTC) in the Interconnection Agreement is hereby deleted throughout the Interconnection Agreement and replaced with tw telecom of south carolina llc (tw telecom).

3. All of the other provisions of the Interconnection Agreement, dated December 02, 2007, shall remain in full force and effect.

4. Either or both of the Parties are authorized to submit this Amendment to each Public Service Commission for approval subject to Section 252(e) of the Telecommunications Act of 1996.

5. In entering into this Amendment, neither Party waives, and each Party expressly reserves, any rights, remedies or arguments it may have at law or under the intervening law or regulatory change provisions in the underlying Agreement (including intervening law rights asserted by either Party via written notice predating this Amendment) with respect to any orders, decisions, legislation or proceedings and any remands thereof, which the Parties have not yet fully incorporated into this Agreement or which may be the subject of further review.

tw telecom of south carolina llc
By: tw telecom holdings inc., its sole member

By: Tina Davis

Name: Tina Davis

Title: Senior Vice President
Deputy General Counsel

Date: JUL 23 2008

BellSouth Telecommunications, Inc. d/b/a
AT&T South Carolina

By: Kristen E. Shore

Name: Kristen E. Shore

Title: Director

Date: 8/4/08

	OCN #	**ACNA**
SOUTH CAROLINA	_____	_____

[CCCS Amendment 2 of 2]

AT&T Wholesale Amendment

Contract Number: 9129

Amendment to the Interconnection Agreement
Between
tw telecom of south carolina llc
and
BellSouth Telecommunications, Inc.
d/b/a AT&T South Carolina

Dated December 2, 2007

Pursuant to this Amendment, (the "Amendment"), tw telecom of south carolina llc (TWTC), and d/b/a AT&T South Carolina (AT&T), hereinafter referred to collectively as the "Parties," hereby agree to amend that certain Interconnection Agreement between the Parties dated December 2, 2007 (Agreement) to be effective as of the date of the last signature to the amendment..

WHEREAS, AT&T and TWTC entered into the Agreement on December 2, 2007;

WHEREAS this Amendment applies to the State of South Carolina, and;

NOW THEREFORE, in consideration of the mutual provisions contained herein and other good and valuable consideration, the receipt and sufficiency of which are hereby acknowledged, the Parties hereby covenant and agree as follows:

1. The Parties agree to replace the Notices contacts in Section 19.1 of the General Terms and Conditions with the following for TWTC:

Tina Davis
Sr. VP & Deputy Counsel
tw telecom inc.
10475 Park Meadows Drive
Littleton, CO 80124
Tel. 303-566-1279
Fax. 303-566-1010
tina.davis@twtelecom.com

Copy to:
Carolyn Ridley
Vice President Regulatory, Southeast
tw telecom inc.
2078 Quail Run Drive
Bowling Green, KY 42104
Cell 615-584-7372
Office 270-782-1716
carolyn.ridley@twtelecom.com

2. The Parties agree to replace the language in Attachment 6 Section 2.3.2 in its entirety with the following:

The Parties shall place orders for services by submitting an LSR to the other Party.
AT&T shall bill TWTC an electronic service order charge at the rate set forth in the applicable Attachment to the Agreement for each LSR submitted by means of an electronic interface. AT&T shall bill TWTC a manual

service order charge at the rate set forth in the applicable Attachment to this Agreement for each LSR submitted by means other than the electronic Interfaces (e.g., mail, fax, courier, etc.). TWTC shall bill AT&T a single manual OSS charge per LSR associated with the port-back of a telephone number to AT&T's switch as set forth in Exhibit A to Attachment 2 of this Agreement until such time as electronic ordering is provided by TWTC to AT&T. At such time, the applicable electronic OSS charge as set forth in Exhibit A to Attachment 2 of this Agreement would apply. To the extent TWTC performs another OSS function for AT&T that AT&T performs for TWTC pursuant to this Agreement, the Parties shall amend this Agreement to include such function subject to the same rates, terms and conditions that apply to AT&T under this Agreement. An individual LSR will be identified for billing purposes by its PON.

3. All of the other provisions of the Agreement, dated December 2, 2007, shall remain in full force and effect.

4. Either or both of the Parties are authorized to submit this Amendment to the respective state regulatory authorities for approval subject to Section 252(e) of the Federal Telecommunications Act of 1996.

5. In entering into this Amendment, neither Party waives, and each Party expressly reserves, any rights, remedies or arguments it may have at law or under the intervening law or regulatory change provisions in the underlying Agreement (including intervening law rights asserted by either Party via written notice predating this Amendment) with respect to any orders, decisions, legislation or proceedings and any remands thereof, which the Parties have not yet fully incorporated into this Agreement or which may be the subject of further review.

tw telecom of south carolina llc
By: tw telecom holdings, inc., its sole member

Signature: Tina Davis

Name: Tina Davis
(Print or Type)

Title: Sr. Vice President and Deputy General Counsel

Date: 1/15/2010

BellSouth Telecommunications, Inc. d/b/a AT&T South Carolina by AT&T Operations, Inc., its authorized agent

Signature: Eddie Reed Jr.

Name: Eddie A. Reed, Jr.

Title: Director – Interconnection Agreements

Date: 1-26-10

AT&T Wholesale Amendment

Contract Number: 10262

AMENDMENT TO THE AGREEMENT BETWEEN TW TELECOM OF SOUTH CAROLINA LLC AND BELLSOUTH TELECOMMUNICATONS, INC. d/b/a AT&T SOUTH CAROLINA

This Amendment (the "Amendment") amends the Interconnection Agreement by and between BellSouth Telecommunications, Inc. d/b/a AT&T South Carolina ("AT&T South Carolina") and tw telecom of south carolina llc ("CLEC").

WHEREAS, AT&T South Carolina and CLEC are Parties to an Interconnection Agreement under Sections 251 and 252 of the Communications Act of 1934, as amended (the "Act"), approved February 27, 2008 and as subsequently amended (the "Agreement"); and

WHEREAS, BellSouth Telecommunications, Inc. will change its form of organization from a Georgia Corporation to a Georgia Limited Liability Company and wishes to reflect that change as set forth herein.

NOW, THEREFORE, in consideration of the promises and mutual agreements set forth herein, the Parties agree to amend the Agreement as follows:

1. The Agreement is hereby amended to reflect the organizational change from BellSouth Telecommunications, Inc. to BellSouth Telecommunications, LLC, which is incorporated herein by this reference into the Agreement.
2. EXCEPT AS MODIFIED HEREIN, ALL OTHER TERMS AND CONDITIONS OF THE UNDERLYING AGREEMENT SHALL REMAIN UNCHANGED AND IN FULL FORCE AND EFFECT.
3. In entering into this Amendment, neither Party waives, and each Party expressly reserves, any rights, remedies or arguments it may have at law or under the intervening law or regulatory change provisions in the underlying Agreement (including intervening law rights asserted by either Party via written notice predating this Amendment) with respect to any orders, decisions, legislation or proceedings and any remands thereof, which the Parties have not yet fully incorporated into this Agreement or which may be the subject of further review.
4. This Amendment shall not modify or extend the Effective Date or Term of the underlying Agreement, but rather, shall be coterminous with such Agreement.
5. This Amendment shall be filed with and is subject to approval by the Public Service Commission of South Carolina and shall become effective ten (10) days following approval by such Commission.

tw telecom of south carolina llc
By: tw telecom holdings inc., its sole member

By: Tina Davis

Printed: Tina Davis

Title: Senior Vice President
Deputy General Counsel
(Print or Type)

Date: 7-21-11

BellSouth Telecommunications, LLC d/b/a AT&T SOUTH CAROLINA by AT&T Services, Inc., its authorized agent

By: Pat Doherty

Printed: Patrick Doherty

Title: Director - Regulatory
(Print or Type)

Date: JUL 28 2011

State	ULEC OCN
SOUTH CAROLINA	174B

Description	ACNA Code(s)
ACNA(s)	XPC