SCE&G®
A SCANA COMPANY

Generator Interconnection Feasibility Study For SCE&G V.C. Summer Nuclear #2

Prepared for:
SCE&G Nuclear Group

August 4, 2006

Prepared by:
SCE&G Transmission Planning

TABLE OF CONTENTS

General Discussion ..... Page 3

I. Generator Information ..... Page 4

II. Transmission Studies
   a. Power Flow Analysis ..... Page 5
   b. Short Circuit Analysis ..... Page 14

III. Preliminary Recommendations ..... Page 15

IV. General Engineering Design ..... Page 17

V. Cost Estimates ..... Page 19

Generator Interconnection Feasibility Study for SCE&G V.C. Summer Nuclear #2

Generator Interconnection Feasibility Studies are intended to be preliminary studies to aid the requestor in determining if the application should advanced to additional, more detailed and more costly studies or be withdrawn. These additional studies include the System Impact Study, Optional Upgrade Studies and the Facility Study. Interconnection Feasibility Studies do not determine the final facilities and costs of interconnecting the requested generator to the existing transmission system.

General Discussion

The SCE&G Nuclear Group has applied for interconnection of a new 1375 MVA nuclear generator near the existing V.C. Summer site. This new generator would be jointly owed by SCE&G and Santee Cooper, SCE&G would own 55% and Santee Cooper would own the remaining 45%. In this study SCE&G simulated Santee Cooper's portion of the generator being delivered to the Santee Cooper system.

SCE&G Transmission Planning is participating in a joint study with Santee Cooper and other interconnected transmission providers to evaluate the effect of this generator and other planned generators in the region. Results of this joint study, such as short circuit, transient stability and power transfer capabilities, may affect the final recommendations included in this report.

The format of the report is as follows:

I. Generator Information (provided by the SCE&G Nuclear Group)
II. Transmission Studies
   A. Power Flow Analysis
   B. Short Circuit Analysis
III. Preliminary Recommendations
IV. General Engineering Design
V. Cost Estimates

I. Generator Information

The generator design consists of a single nuclear unit and one step-up transformer. The generator unit will have a maximum gross MVA output capacity of 1,375 MVA and a maximum net MW of 1,165 MW.

The generator design consists of the following information:

MVA – gross:	1375
MW – net:	1165
Power Factor:	between .90 and 1.05
Voltage:	22kV
Speed:	1800 rpm
X'd-sat.: 0.465 PU;	X''d-sat.: 0.325 PU
X2-sat.: 0.320 PU;	X0: 0.237 PU

II. Transmission Studies

A. Power Flow Analysis

For the proposed generator interconnection of the VC Summer #2 generator, Transmission Planning performed analyses of:

1. Base case conditions (no outages) simulating normal conditions
2. N-1 conditions simulating single facility outages of each transmission facility on the SCE&G system
3. Selected n-2 conditions simulating the loss of two facilities on the SCE&G transmission system

This study is based on future projected conditions on the SCE&G transmission system, simulating 2015 peak summer conditions and assumes that the following transmission improvements will be made to SCE&G's Columbia area transmission system prior to 2015. These transmission improvements are currently scheduled and are needed for other system needs:

1. Upgrade Lyles-William Street 115kV line
2. Upgrade Lyles-Denny Terrace 115kV line #1 and #2
3. Add a 2nd Lake Murray 230/115kV auto transformer
4. Increase thermal rating on the Denny Terrace-Lyles 230kV line

Additionally, this study assumes that the following proposed transmission modifications will be made by Santee Cooper to their transmission system as part of their interconnection to the proposed generation. These transmission improvements were provided by Santee Cooper:

1. Add a VCS-Winnsboro 230kV line with 230/69kV transformers at Winnsboro.
2. Add a Winnsboro-Richburg 230kV line with 230/69kV transformers at Richburg.
3. Add a Richburg-Flat Creek 230kV line

Run #1 – Injection of the proposed 1,165 MW at VC Summer 230kV with no affiliated transmission improvements

For the initial analysis, 1,165 MW is injected at the VC Summer 230kV bus with no affiliated modifications to the SCE&G transmission system. With the existing VC Summer net generation of 966 MW and the Fairfield Pumped Storage net generation of 608 MW, the total net MW generation connected to the 230kV system in the vicinity of the VC Summer site is 2,739 MW.

Base Case Conditions
There are no overloaded facilities in the base case (no outages). However, several existing 230kV lines in the VC Summer area are highly loaded:

- The VCS-Pineland 230kV line loads to 75% of its 475 MVA Normal Rating
- The VCS-Denny Terrace 230kV line loads to 68% of its 475 MVA Normal Rating
- The VCS-Blythewood (Santee Cooper) 230kV line loads to 58% of its 478 MVA Normal Rating
- The VCS-Lake Murray 230kV line loads to 80% of its 704 MVA Normal Rating
- The Denny Terrace-Lyles 230kV line loads to 73% of its 475 MVA Normal Rating
- The Parr-Denny Terrace 230kV line loads to 66% of its 704 MVA Normal Rating.

N-1 Conditions

The n-1 analyses show the following overload conditions due to the additional generation:

Overloaded Facility	Emergency Rating (MVA)	Overload (%)	Contingency
Parr-VC Summer 230kV line #1	636	103	Parr-VC Summer 230kV line #2
Parr-VC Summer 230kV line #2	636	103	Parr-VC Summer 230kV line #1
Denny Terrace-Lyles 230kV line	510	109	VC Summer-Lake Murray 230kV line

Selected N-2 Conditions

The n-2 analyses show the following overload conditions due to the additional generation:

Overloaded Facility	Emergency Rating (MVA)	Overload (%)	Contingency(s)
Parr-Denny Terrace 230kV line	755	111	VC Summer-Denny Terrace 230kV line and VC Summer-Lake Murray 230kV line
Parr-Denny Terrace 230kV line	755	110	VC Summer-Pineland 230kV line and VC Summer-Lake Murray 230kV line
Parr-Denny Terrace 230kV line	755	104	VC Summer-Pineland 230kV line and VC Summer-Denny Terrace 230kV line
VC Summer Parr 230kV line	636	135	Other VC Summer-Parr 230kV line and VC Summer-Lake Murray 230kV line
VC Summer Parr 230kV line	636	123	Other VC Summer-Parr 230kV line and VC Summer-Denny Terrace 230kV line
VC Summer Parr 230kV line	636	123	Other VC Summer-Parr 230kV line and VC Summer-Pineland 230kV line
VC Summer Parr 230kV line	636	112	Other VC Summer-Parr 230kV line and VC Summer-Blythewood 230kV line
VC Summer Parr 230kV line	636	110	Other VC Summer-Parr 230kV line and VC Summer-Winnsboro 230kV line
VC Summer Parr 230kV line	636	109	Other VC Summer-Parr 230kV line and VC Summer-Pomaria 230kV line

VC Summer Parr 230kV line	636	108	Other VC Summer-Parr 230kV line and VC Summer-Timberlake 230kV line
VC Summer Parr 230kV line	636	104-107	Other VC Summer-Parr 230kV line and one of various 230kV facilities in Columbia area.
Lyles-William Street 115kV line	255	116	VC Summer-Lake Murray 230kV line and Lyles-Edenwood 230kV line
Lyles 230/115kV auto transf	336	101	Denny Terrace 230/115kV auto transf #1 and Denny Terrace 230/115kV auto transf #2
VC Summer-Pineland 230kV line	510	130	Parr-Denny Terrace 230kV line and VC Summer-Lake Murray 230kV line
VC Summer-Pineland 230kV line	510	125	Parr-Denny Terrace 230kV line and VC Summer-Denny Terrace 230kV line
VC Summer-Pineland 230kV line	510	115	VC Summer-Denny Terrace 230kV line and VC Summer-Lake Murray 230kV line
VC Summer-Pineland 230kV line	510	101	Parr-Denny Terrace 230kV line and Wateree Generator or GSU
VC Summer-Pineland 230kV line	510	101	Parr-Denny Terrace 230kV line and Wateree-Huron 230kV line
VC Summer-Denny Terrace 230kV line	510	132	Parr-Denny Terrace 230kV line and VC Summer-Lake Murray 230kV line
VC Summer-Denny Terrace 230kV line	510	125	Parr-Denny Terrace 230kV line and VC Summer-Pineland 230kV line
VC Summer-Denny Terrace 230kV line	510	112	VC-Pineland 230kV line and VC Summer-Lake Murray 230kV line
VC Summer-Lake Murray 230kV line	755	111	Parr-Denny Terrace 230kV line and VC Summer-Denny Terrace 230kV line
VC Summer-Lake Murray 230kV line	755	111	Parr-Denny Terrace 230kV line and VC Summer-Pineland 230kV line
VC Summer-Lake Murray 230kV line	755	101	VC Summer-Denny Terrace 230kV line and VC Summer-Pineland 230kV line
Denny Terrace-Lyles 230kV line	510	105-130	VC Summer-Lake Murray 230kV line and one of various 230kV facilities in Columbia area.
Denny Terrace 230/115kV auto transf #1	336	133	Denny Terrace 230/115kV auto transf #2 and Denny Terrace-Lyles 230kV line
Denny Terrace 230/115kV auto transf #1	336	126	VC Summer-Lake Murray 230kV line and Denny Terrace-Lyles 230kV line
Denny Terrace 230/115kV auto transf #1	336	111	Lyles 230/115kV auto transf and Denny Terrace 230/115kV auto transf #2
Denny Terrace 230/115kV auto transf #1	336	107	VC Summer-Lake Murray 230kV line and Denny Terrace 230/115kV auto transf #2

Denny Terrace 230/115kV auto transf #2	336	132	Denny Terrace 230/115kV auto transf #1 and Denny Terrace-Lyles 230kV line
Denny Terrace 230/115kV auto transf #2	336	124	VC Summer-Lake Murray 230kV line and Denny Terrace-Lyles 230kV line
Denny Terrace 230/115kV auto transf #2	336	110	Lyles 230/115kV auto transf and Denny Terrace 230/115kV auto transf #1
Denny Terrace 230/115kV auto transf #2	336	106	VC Summer-Lake Murray 230kV line and Denny Terrace 230/115kV auto transf #1
Lake Murray 230/115kV auto transf #1	336	119	Lake Murray-Edenwood 230kV line and Lake Murray 230/115kV auto transf #2
Lake Murray 230/115kV auto transf #2	336	119	Lake Murray-Edenwood 230kV line and Lake Murray 230/115kV auto transf #1
Lake Murray-Saluda 115kV line	255	111	Bush River-Parr 230kV line and Saluda-McMeekin 115kV line
Saluda-McMeekin 115kV line	255	113	Bush River-Parr 230kV line and Lake Murray-Saluda 115kV line
Saluda-Whitehall 115kV line section	166	105	Lyles-William Street 115kV line and Coit-Vista South 115kV line

Run #2 – Rebuild Overloaded or highly loaded lower capacity lines

For Run #2, the following transmission modifications are made as a result of overloaded facilities that were identified in the Run #1 n-1 analyses:

1. Upgrade the Parr-VC Summer 230kV line #1 to B1272 conductor
2. Upgrade the Parr-VC Summer 230kV line #2 to B1272 conductor
3. Upgrade the Denny Terrace-Lyles 230kV line to B1272 conductor

Also, the Run #1 n-2 analyses showed that each of the four major transmission lines leaving the VC Summer area to the Columbia load center overload for the loss of various and paired combinations of the other three lines. We first addressed this by considering if upgrading the two lines with the lowest existing capacity is adequate:

5. Upgrade the VC Summer-Pineland 230kV line to B1272 conductor
6. Upgrade the VC Summer-Denny Terrace 230kV line to B1272 conductor

Base Case Conditions
There are no overloaded facilities in the Run #2 base case (no outages).

N-1 Conditions
There are no overloaded facilities in the Run #2 n-1 analyses due to the additional generation.

Selected N-2 Conditions

The Run #2 n-2 analyses show the following overload conditions due to the additional generation:

Overloaded Facility	Emergency Rating (MVA)	Overload (%)	Contingency(s)
Parr-Denny Terrace 230kV line	755	106	VC Summer-Denny Terrace 230kV line and VC Summer-Pineland 230kV line
Lyles-Williams Street 115kV line	255	121	VC Summer-Lake Murray 230kV line and Lyles-Edenwood 230kV line
Lyles-Williams Street 115kV line	255	101	VC Summer-Lake Murray 230kV line and Denny Terrace-Lyles 230kV line
Lyles 230/115kV auto transf	336	109	VC Summer-Lake Murray 230kV line and Lyles-Edenwood 230kV line
Lyles 230/115kV auto transf	336	110	Denny Terrace 230/115kV auto transf #1 and Denny Terrace 230/115kV auto transf #2
VC Summer-Lake Murray 230kV line	755	100	Parr-Denny Terrace 230kV line and VC Summer-Denny Terrace 230kV line
Denny Terrace 230/115kV auto transf #1	336	142	Denny Terrace 230/115kV auto transf #2 and Denny Terrace-Lyles 230kV line
Denny Terrace 230/115kV auto transf #1	336	131	VC Summer-Lake Murray 230kV line and Denny Terrace-Lyles 230kV line
Denny Terrace 230/115kV auto transf #1	336	115	Lyles 230/115kV auto transf and Denny Terrace 230/115kV auto transf #2
Denny Terrace 230/115kV auto transf #1	336	101	Denny Terrace-Lyles 230kV line and loss of one of three 115kV lines in the Pineland area
Denny Terrace 230/115kV auto transf #2	336	141	Denny Terrace 230/115kV auto transf #1 and Denny Terrace-Lyles 230kV line
Denny Terrace 230/115kV auto transf #2	336	129	VC Summer-Lake Murray 230kV line and Denny Terrace-Lyles 230kV line
Denny Terrace 230/115kV auto transf #2	336	114	Lyles 230/115kV auto transf and Denny Terrace 230/115kV auto transf #1
Denny Terrace 230/115kV auto transf #2	336	105	VC Summer-Lake Murray 230kV line and Denny Terrace 230/115kV auto transf #1
Lake Murray 230/115kV auto transf #1	336	119	Lake Murray-Edenwood 230kV line and Lake Murray 230/115kV auto transf #2
Lake Murray 230/115kV auto transf #2	336	119	Lake Murray-Edenwood 230kV line and Lake Murray 230/115kV auto transf #1

Lake Murray-Saluda 115kV line	255	110	Bush River-Parr 230kV line and Saluda-McMeekin 115kV line
Saluda-McMeekin 115kV line	255	111	Bush River-Parr 230kV line and Lake Murray-Saluda 115kV line

Run #3 – Rebuild Remaining two lines serving the Columbia load center

In Run #2, the Parr-Denny Terrace 230kV line and VC Summer-Lake Murray 230kV line both overload for n-2 contingencies in the Columbia area. The analyses in Run #2 show that both of these lines will require upgrading. Also, the overloading of the upgraded Parr-Denny Terrace 230kV line shows that a second Parr-Denny Terrace 230kV circuit is needed. In Run #3 the alternative of constructing a Parr-Denny Terrace 230kV line #2 with B1272 conductor and leaving the existing #1 line as 1272 conductor is evaluated. In addition, in Run #3 a 3rd Lake Murray 230/115kV auto transformer is added.

For Run #3, the following transmission modifications are made:

1. Upgrade the Parr-VC Summer 230kV line #1 to B1272 conductor.
2. Upgrade the Parr-VC Summer 230kV line #2 to B1272 conductor.
3. Add a new Denny Terrace-Lyles #2 230kV line (B1272)
4. Add a 3rd 230/115kV 336 MVA auto transformer at Lake Murray.
5. Upgrade the VC Summer-Pineland 230kV line to B1272 conductor.
6. Upgrade the VC Summer-Denny Terrace 230kV line to B1272 conductor.
7. Upgrade the Parr-Denny Terrace 230kV line to B1272
8. Upgrade the VC Summer-Lake Murray 230kV line to B1272

Base Case Conditions
There are no overloaded facilities in the Run #3 base case (no outages).

N-1 Conditions
There are no overloaded facilities in the Run #3 n-1 analyses due to the additional generation.

Selected N-2 Conditions
The Run #3 n-2 analyses show the following overload conditions due to the additional generation:

Overloaded Facility	Emergency Rating (MVA)	Overload (%)	Contingency(s)
Lyles-Williams Street 115kV line	255	123	VC Summer-Lake Murray 230kV line and Lyles-Edenwood 230kV line
Lyles 230/115kV auto transf	336	114	VC Summer-Lake Murray 230kV line and Lyles-Edenwood 230kV line

Lyles 230/115kV auto transf	336	110	Denny Terrace 230/115kV auto transf #1 and Denny Terrace 230/115kV auto transf #2
Denny Terrace-Lyles 230kV #1 line	510	119	Denny Terrace-Lyles 230kV #2 line and VC Summer-Denny Terrace 230kV line
Denny Terrace 230/115kV auto transf #1	336	111	Lyles 230/115kV auto transf and Denny Terrace 230/115kV auto transf #2
Denny Terrace 230/115kV auto transf #1	336	103	VC Summer-Lake Murray 230kV line and Denny Terrace 230/115kV auto transf #2
Denny Terrace 230/115kV auto transf #2	336	110	Lyles 230/115kV auto transf and Denny Terrace 230/115kV auto transf #1
Denny Terrace 230/115kV auto transf #2	336	102	VC Summer-Lake Murray 230kV line and Denny Terrace 230/115kV auto transf #1
Lake Murray-Saluda 115kV line	255	117	Bush River-Parr 230kV line and Saluda-McMeekin 115kV line
Lake Murray-Saluda 115kV line	255	105	Lyles-Williams St 115kV line and Saluda-McMeekin 115kV line
Lake Murray-Saluda 115kV line	255	101	Lake Murray-Edenwood 230kV line and Saluda-McMeekin 115kV line
Saluda-McMeekin 115kV line	255	118	Lake Murray-Saluda 115kV line and Bush River-Parr 230kV line
Saluda-McMeekin 115kV line	255	106	Lake Murray-Saluda 115kV line and Lyles-William Street 115kV line
Saluda-McMeekin 115kV line	255	102	Lake Murray-Saluda 115kV line and Lake Murray-Edenwood 230kV line

Run #4 – Add two new lines serving the Columbia load center

Run #3 shows that upgrading all four 230kV lines from the VC Summer area to the Columbia Area load center along with several other transmission improvements is required to accommodate the additional VC Summer generation. However, upgrading these lines to B1272 will require the removal of the existing facilities resulting in the loss of the transmission capacity associated with these existing lines. Removal of these facilities and replacing them with new construction has the net effect of receiving only 50% of the capability of the new transmission improvements. Doing this even though there is significant capability and life remaining in the existing lines is not a cost effective practice.

In Run #4 we will evaluate adding a new VC Summer-Killian 230kV line and a new VC Summer-Lake Murray 230kV line.

Also, for Run #4 only one 230kV B1272 circuit between Lyles and Denny Terrace is considered.

For Run #4, the following transmission modifications are made:

1. Upgrade the Parr-VC Summer 230kV line #1 to B1272 conductor.
2. Upgrade the Parr-VC Summer 230kV line #2 to B1272 conductor.
3. Upgrade the Denny Terrace-Lyles 230kV line to B1272 conductor.
4. Add a 3rd 230/115kV 336 MVA auto transformer at Lake Murray.
5. Add a VC Summer-Killian 230kV line with B1272 conductor
6. Add a VC Summer-Lake Murray 230kV #2 line with B1272 conductor

Base Case Conditions
There are no overloaded facilities in the Run #4 base case (no outages).

N-1 Conditions
The Run #4 n-1 analyses show the following overload conditions due to the additional generation:

Overloaded Facility	Emergency Rating (MVA)	Overload (%)	Contingency
Saluda-McMeekin 115kV line	255	105	Lake Murray-Saluda 115kV line

N-2 Conditions
The n-2 analyses show the following overload conditions due to the additional generation:

Overloaded Facility	Emergency Rating (MVA)	Overload (%)	Contingency(s)
Denny Terrace 230/115kV auto transf #1	336	115	Denny Terrace 230/115kV auto transf #2 and Denny Terrace-Lyles 230kV line
Denny Terrace 230/115kV auto transf #2	336	114	Denny Terrace 230/115kV auto transf #1 and Denny Terrace-Lyles 230kV line
Lake Murray-Saluda 115kV line	255	106-126	Saluda-McMeekin 115kV line or Lake Murray-McMeekin 115kV line and one of various other Columbia Area transmission facilities
Lake Murray-McMeekin 115kV line	255	104-111	Lake Murray-Saluda 115kV line or Saluda McMeekin 115kV line and one of various other Columbia Area transmission facilities
Saluda-McMeekin 115kV line	255	101-127	Lake Murray-Saluda 115kV line or Lake Murray-McMeekin 115kV line and one of various other Columbia Area transmission facilities

Run #5 – Add the two new lines serving the Columbia load center and additional transmission improvements

In Run #4, the loss of the Denny Terrace-Lyles 230kV line and one of the Denny Terrace 230/115kV auto transformers results in the remaining Denny Terrace 230/115kV auto transformer overloading. Adding a 3rd Denny Terrace 230/115kV auto transformer will correct this problem.

Also, upgrading the Lake Murray-Saluda 115kV line, the Lake Murray-McMeekin 115kV line and the Saluda-McMeekin 115kV line to B1272 conductor will eliminate the overloads on those lines.

For Run #5, the following transmission modifications are made:

1. Upgrade the Parr-VC Summer 230kV line #1 to B1272
2. Upgrade the Parr-VC Summer 230kV line #2 to B1272
3. Upgrade the Denny Terrace-Lyles 230kV line to B1272
4. Add a 3rd 230/115kV 336 MVA auto transformer at Lake Murray
5. Add a 3rd 230/115kV 336 MVA auto transformer at Denny Terrace
6. Add a VC Summer-Killian 230kV line with B1272
7. Add a VC Summer-Lake Murray 230kV line #2 with B1272
8. Upgrade the existing Saluda-McMeekin 115kV line with B1272
9. Upgrade the existing Lake Murray-McMeekin 115kV line with B1272
10. Upgrade the existing Lake Murray-Saluda 115kV line with B1272

Base Case Conditions
There are no overloaded facilities in the Run #5 base case (no outages).

N-1 Conditions
There are no overloaded facilities in the Run #5 n-1 analyses due to the additional generation.

Selected N-2 Conditions
There are no overloaded facilities in the Run #5 n-2 analyses due to the additional generation.

B. Short Circuit Analysis

An initial review of the effect of the increased fault current in the VC Summer area due to the new generation and the required transmission facilities indicates that sixteen 230kV breakers (eleven at VC Summer and five at Parr) are projected to be overstressed. Additionally, nine 115kV breakers in the Columbia area are projected to become overstressed. Each of these overstressed breakers will need to be replaced with a higher capacity breaker.

III. Preliminary Recommendations

Proposed Transmission Improvements

The analyses performed in this study show that constructing two new 230kV lines from the proposed VCS #2 generator to the Columbia Area load center, plus additional transmission improvements described below, are required to reliably transmit the 1,165 MW of the proposed VC Summer #2 generator from of the VC Summer area to the remainder of the SCE&G system. Also, the analyses show that constructing two new 230kV lines is less costly and more effective than upgrading the numerous existing 230kV transmission facilities that currently transmit power from the VC Summer area.

The required transmission projects are:

1. Construct a new VC Summer-Killian 230kV line with B1272 conductor
    - (add 230kV terminal at Killian)
2. Construct a new VC Summer-Lake Murray 230kV line with B1272 conductor
    - (add 230kV terminal at Lake Murray)
3. Construct a new VC Summer-VC Summer (existing) Bus #2 230kV line with B1272 conductor
    - (add 230kV terminal at existing VC Summer Bus #2)
4. Construct a new VC Summer-VC Summer (existing) Bus #3 230kV line with B1272 conductor
    - (add 230kV terminal at existing VC Summer Bus #3)
5. Upgrade the existing Denny Terrace-Lyles 230kV line to B1272
6. Upgrade the existing Parr-VC Summer #1 230kV line to B1272
7. Upgrade the existing Parr-VC Summer #2 230kV line to B1272
8. Add a 3rd 230/115kV 336 MVA auto transformer at Lake Murray
9. Add a 3rd 230/115kV 336 MVA auto transformer at Denny Terrace
10. Upgrade the existing Saluda-McMeekin 115kV line to B1272
11. Upgrade the existing Lake Murray-McMeekin 115kV line to B1272
12. Upgrade the existing Lake Murray-Saluda 115kV to with B1272

Construct a new 230kV generator substation at the proposed site using a breaker-and-a-half design with seven 230kV terminals.

1. One - for the generator step up transformer
2. One - for station service
3. One - for the new 230kV line to the existing V. C. Summer 230kV bus #2
4. One - for the new 230kV line to the existing V. C. Summer 230kV bus #3
5. One - for the new 230kV line to Lake Murray
6. One - for the new 230kV line to Killian
7. One - for the new 230kV line to Santee Cooper

A total of eleven 230kV breakers are needed at the new generator substation for this design.

To resolve overstressed conditions of several 230kV and 115kV breakers as described in the Short Circuit Analysis section, Transmission Planning recommends replacing the following breakers with higher interrupting capability breakers:

Location	Voltage	Breaker #
VC Summer	230	8722
VC Summer	230	8732
VC Summer	230	8742
VC Summer	230	8772
VC Summer	230	8792
VC Summer	230	8832
VC Summer	230	8842
VC Summer	230	8852
VC Summer	230	8892
VC Summer	230	8912
VC Summer	230	8942
Parr	230	6402
Parr	230	6412
Parr	230	6422
Parr	230	6432
Parr	230	6442
Saluda Hydro	115	562
McMeekin	115	1051
McMeekin	115	2051
Edenwood	115	2712
Edenwood	115	3672
Edenwood	115	3682
Denny Terrace	115	8032
Denny Terrace	115	8042
Denny Terrace	115	8092

IV. General Engineering Design

Single Line Diagram

Red – New installations
Blue – Existing facilities
Green – Upgraded facilities

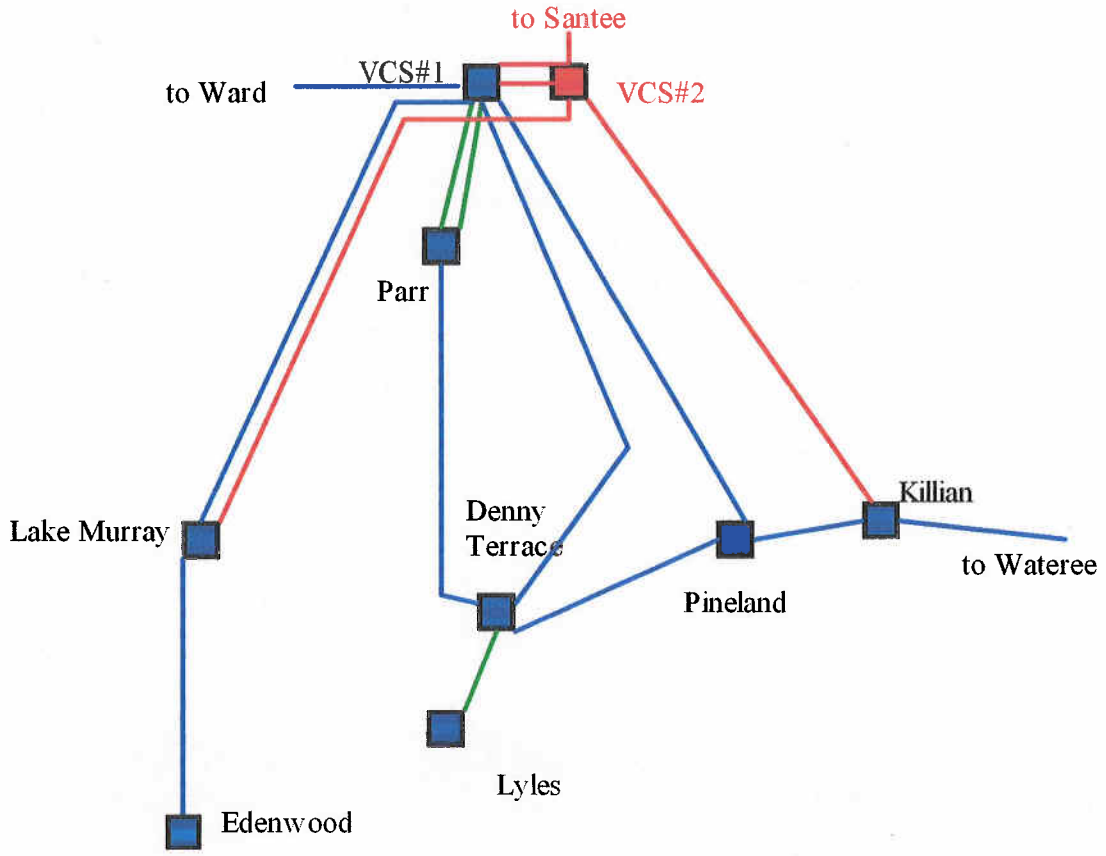

Substation Single Line

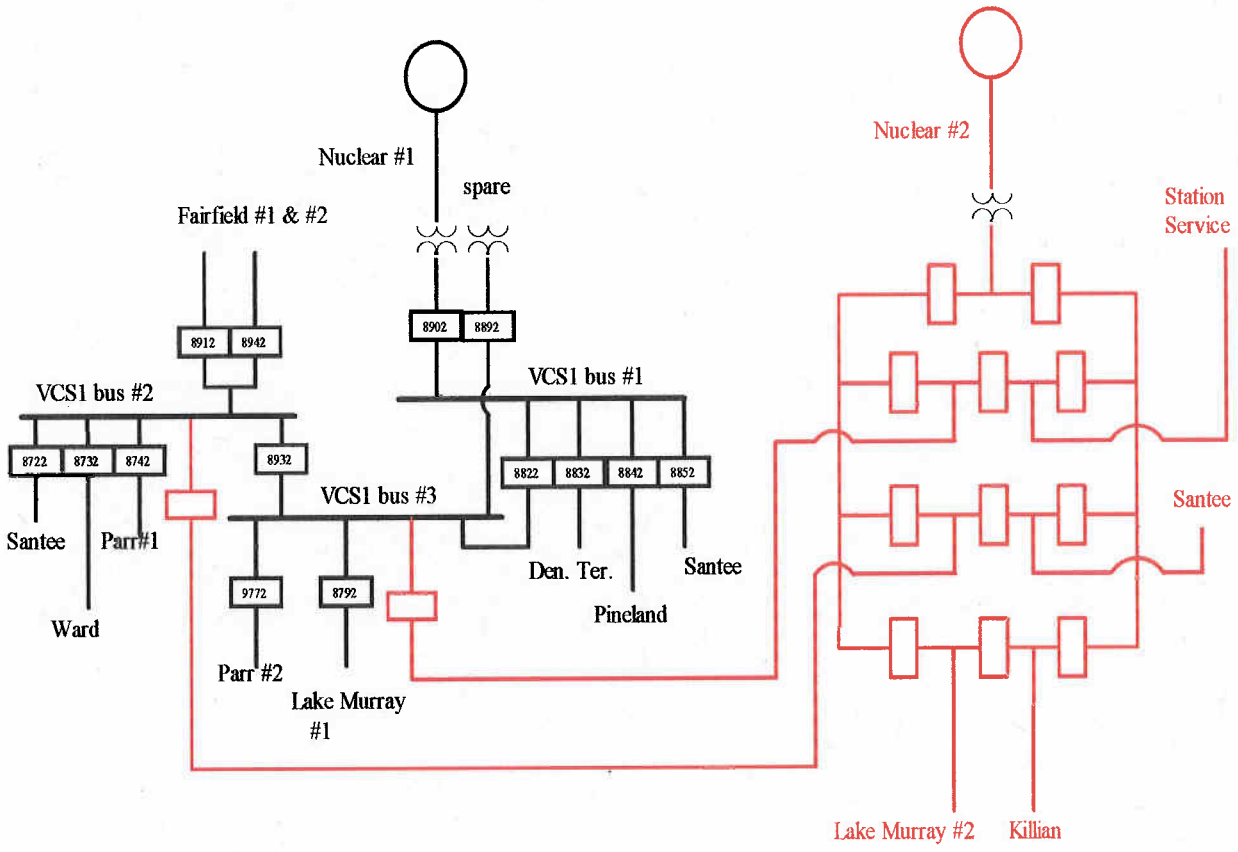

V. Cost Estimates

All cost estimates are in 2014 dollars.

1. Construct VC Summer-Killian 230kV $25,000,000
   - (add 230kV terminal at Killian) 1,100,000
2. Construct VC Summer-Lake Murray 230kV 17,000,000
   - (add 230kV terminal at Lake Murray) 1,100,000
3. Construct new VC Summer-VC Summer (existing) Bus #2 V 600,000
   - (add 230kV terminal at existing VC Summer Bus #2) 1,100,000
4. Construct new VC Summer-VC Summer (existing) Bus #3 600,000
   - (add 230kV terminal at existing VC Summer Bus #3) 1,100,000
5. Upgrade existing Denny Terrace-Lyles 230kV 1,500,000
6. Upgrade existing Parr-VC Summer #1 230kV 1,400,000
7. Upgrade existing Parr-VC Summer #2 230kV 1,400,000
8. Add a 3rd 230/115kV 336 MVA auto transformer at Lake Murray 5,000,000
9. Add a 3rd 230/115kV 336 MVA auto transformer at Denny Terrace 8,000,000
10. Upgrade existing Saluda-McMeekin 115kV line 125,000
11. Upgrade existing Lake Murray-McMeekin 115kV line 500,000
12. Upgrade existing Lake Murray-Saluda 115kV 450,000

Construct a new 230kV generator substation at the proposed site using a breaker-and-a-half design with seven 230kV terminals 12,950,000

Replace overstressed
1. 230kV breakers - 16 3,200,000
2. 115kV breakers - 9 1,350,000

Total Cost Estimate $83,475,000