BELLSOUTH® / CLEC Agreement

Customer Name: MCImetro Access Transmission Services, L.L.C.

MCImetro TRRO Compliant Agreement - SC	2
Table of Contents	3
General Terms and Conditions	5
Signature Page	23
Att 1 - Resale	24
Att 1 - Resale Discounts & Rates	43
Att 2 - Network Services & Other Elements	44
Att 2 - Network Element Rates - Exhibit A	90
Att 2 - Network Element Rates - Exhibit B	105
Att 3 - Network Interconnection	107
Att 3 - Network Interconnection Rates	139
Att 4 - Collocation	141
Att 4 - Collocation Rates - Exhibit B	193
Att 5 - Access to Numbers & Number Portability	199
Att 6 - Pre-Ordering, Ordering, Provisioning, Maintenance and Repair	204
Att 7- Billing	224
Att 7 - Late Payment Charge Reference Matrix - Exhibit A	238
Att 7 - Credit Profile - Exhibit B	239
Att 8 - Rights of Way	241
Att 9 - Performance Measurements	271
Att 10 - Disaster Recovery Plan	485
Att 11 - BFR & NBR Process	494

Note: This page is not part of the actual signed contract/amendment, but is present for record keeping purposes only.

Interconnection Agreement

Between

BellSouth Telecommunications, Inc.

and

MCImetro Access Transmission Services, L.L.C.

TABLE OF CONTENTS

General Terms and Conditions

Definitions

1. CLEC Certification

2. Term of the Agreement

3. Nondiscriminatory Access .

4. Court Ordered Requests for Call Detail Records and Other Subscriber Information

5. Liability and Indemnification

6. Intellectual Property Rights and Indemnification

7. Proprietary and Confidential Information

8. Resolution of Disputes

9. Taxes

10. Force Majeure

11. Adoption of Agreements

12. Modification of Agreement

13. Legal Rights

14. Indivisibility

15. Severability

16. Non-Waivers

17. Governing Law

18. Assignments and Transfers

19. Notices

20. Rule of Construction

21. Headings of No Force or Effect

22. Multiple Counterparts

23. Filing of Agreement

24. Compliance with Law

25. Necessary Approvals

26. Good Faith Performance

27. Rates

28. Rate True-Up

29. Survival

30. Entire Agreement

TABLE OF CONTENTS (cont'd)

Attachment 1 - Resale

Attachment 2 - Network Elements and Other Services

Attachment 3 - Network Interconnection

Attachment 4 - Collocation

Attachment 5 - Access to Numbers and Number Portability

Attachment 6 – Pre-Ordering, Ordering, Provisioning and Maintenance and Repair

Attachment 7 - Billing

Attachment 8 - Rights-of-Way, Conduits and Pole Attachments

Attachment 9 - Performance Measurements

Attachment 10- BellSouth Disaster Recovery Plan

Attachment 11–Bona Fide Request and New Business Request Process

GENERAL TERMS AND CONDITIONS

TABLE OF CONTENTS

1 CERTIFICATION 4
2 TERM OF THE AGREEMENT 5
3. NONDISCRIMATORY ACCESS 5
4 COURT ORDERED REQUESTS FOR CALL DETAIL RECORDS AND OTHER SUBSCRIBER INFORMATION 6
5. LIABILITY AND INDEMNIFICATION 6
6. INTELLECTUAL PROPERTY RIGHTS AND INDEMNIFICATION 8
7. PROPRIETARY AND CONFIDENTIAL INFORMATION 9
8. RESOLUTION OF DISPUTES 10
9 TAXES 10
10. FORCE MAJEURE 12
11. ADOPTION OF AGREEMENTS 13
12. MODIFICATION OF AGREEMENT 13
13. NON-WAIVER OF LEGAL RIGHTS 13
14. SEVERABILITY 13
15. WAIVERS 14
16. GOVERNING LAW 14
17. ASSIGNMENTS 14
18. NOTICES 14
19. RULE OF CONSTRUCTION 15
20. HEADINGS OF NO FORCE OR EFFECT 15
21. MULTIPLE COUNTERPARTS 15
22. FILING OF AGREEMENT 16
23. COMPLIANCE WITH APPLICABLE LAW 16
24. NECESSARY APPROVALS 16
25. GOOD FAITH PERFORMANCE 16
26. NONEXCLUSIVE DEALINGS 16
27. RATE TRUE-UP 16
28. SURVIVAL 17
29. ENTIRE AGREEMENT 17
30. MISCELLANEOUS 17

THIS AGREEMENT is made by and between BellSouth Telecommunications, Inc., (BellSouth), a Georgia corporation, and MCImetro Access Transmission Services, L.L.C. (MCI), a Delaware limited liability company, and shall be effective on the Effective Date, as defined herein. This Agreement may refer to either BellSouth or MCI or both as a "Party" or "Parties."

W I T N E S S E T H

WHEREAS, BellSouth is a local exchange telecommunications company authorized to provide telecommunications services in the states of Alabama, Florida, Georgia, Kentucky, Louisiana, Mississippi, North Carolina, South Carolina and Tennessee; and

WHEREAS, MCI is or seeks to become a Telecommunications Carrier authorized to provide Telecommunications Services in the states of Alabama, Florida, Georgia, Kentucky, Louisiana, Mississippi, North Carolina, South Carolina, and Tennessee; and

WHEREAS, MCI wishes to resell BellSouth's telecommunications services and purchase network elements and other services, and, solely in connection therewith, may wish to utilize collocation space as set forth in Attachment 4 of this Agreement; and

WHEREAS, the Parties wish to interconnect their facilities and exchange traffic pursuant to Sections 251 and 252 of the Act.

NOW THEREFORE, in consideration of the mutual agreements contained herein, BellSouth and MCI agree as follows:

Definitions Terms used in this Agreement shall have the meanings specified below, or as defined in the Act, or if neither of the foregoing apply, then they shall have their ordinary meanings.

Affiliate is defined as a person that (directly or indirectly) owns or controls, is owned or controlled by, or is under common ownership or control with, another person. For purposes of this paragraph, the term "own" means to own an equity interest (or equivalent thereof) of more than ten (10) percent.

Commission is defined as the appropriate regulatory agency in each state of BellSouth's nine-state region (Alabama, Florida, Georgia, Kentucky, Louisiana, Mississippi, North Carolina, South Carolina, and Tennessee).

Competitive Local Exchange Carrier (CLEC) means a telephone company certificated by the Commission to provide local exchange service within BellSouth's franchised area.

Customer means the purchaser of a Telecommunication Service**.**

Customer of Record means the entity responsible for placing application for Service; requesting additions, rearrangements, maintenance or discontinuance of Service; payment in full of charges incurred for Services such as nonrecurring (NRC) or monthly recurring (MRC).

Day is defined to mean calendar day, unless otherwise expressly noted.

Deposit means assurance provided by a customer in the form of cash, surety bond or bank letter of credit to be held by BellSouth.

Effective Date is defined as the date that the Agreement is effective for purposes of rates, terms and conditions and shall be thirty (30) calendar days after the date of the last signature executing the Agreement. Future amendments for rate changes will also be effective thirty (30) calendar days after the date of the last signature executing the amendment.

End User Customer Location means the physical location of the premises where an End User makes use of the telecommunications services.

FCC means the Federal Communications Commission.

General Terms and Conditions means this document including all of the terms, provisions and conditions set forth herein.

National Holiday means New Year's Day, Martin Luther King Jr. Day, President's Day/Washington's Birthday, Memorial Day, Independence Day, Labor Day, Columbus Day, Veterans' Day, Thanksgiving Day, Christmas Day. In the calculation of intervals of less than ten (10) calendar days national holidays will be excluded.

New Services means functions, features or capabilities that are not currently offered by BellSouth. This includes packaging of existing services or combining a new function, feature or capability with an existing service.

Resale means an activity wherein a certificated CLEC, such as MCI, subscribes to the telecommunications services of BellSouth and then offers those telecommunications services to the public.

Services means all services provided under this Agreement (individually referred to as the "Service" or collectively as the "Services.")

Telecommunications means the transmission, between or among points specified by the user, of information of the user's choosing, without change in the form or content of the information as sent and received.

Telecommunications Service means the offering of telecommunications for a fee directly to the public, or to such classes of users as to be effectively available directly to the public, regardless of the facilities used.

Telecommunications Act of 1996 (Act) means Public Law 104-104 of the United States Congress effective February 8, 1996. The Act amended the Communications Act of 1934 (47 U.S.C. Section 1 et. seq.).

"Except as expressly provided for in this Agreement, the use of the terms "end user" and "customer" shall not be construed or interpreted to limit those types of customers to which MCI may sell services in accordance with Applicable Law. In no event may MCI or its customers use UNEs for the exclusive provision of mobile wireless services or interexchange services."

1 Certification

Each Party has a continuing obligation to comply with state and federal certification requirements and will provide documentation of such compliance upon request.

To the extent MCI is not certified as a Telecommunications Carrier in each state covered by this Agreement as of the execution hereof, MCI will notify and provide BellSouth in writing MCI's Telecommunications Carrier certification when MCI becomes certified to operate in any other

state covered by this Agreement. Upon such notification, BellSouth will file this Agreement with the appropriate Commission for approval.

2 Term of the Agreement

2.1 The term of this Agreement shall be three (3) years, beginning on the Effective Date and shall apply to the BellSouth territory in the state(s) of Alabama, Florida, Georgia, Kentucky, Louisiana, Mississippi, North Carolina, South Carolina, and Tennessee.

2.2 The Parties agree that by no later than two hundred seventy (270) calendar days prior to the expiration of this Agreement, they shall commence negotiations for a new agreement to be effective beginning on the expiration date of this Agreement (Subsequent Agreement).

2.3 If, within one hundred and thirty-five (135) calendar days of commencing the negotiation referred to in Section 2.2 above, the Parties are unable to negotiate new terms, conditions and prices for a Subsequent Agreement, either Party may petition the Commission to establish appropriate terms, conditions and prices for the Subsequent Agreement pursuant to 47 U.S.C. 252. The Parties agree that, in such event, they shall encourage the Commission to issue its order regarding the Subsequent Agreement no later than the expiration date of this Agreement. The Parties further agree that in the event the Commission does not issue its Arbitration order prior to the expiration date of this Agreement, or if the Parties continue beyond the expiration date of this Agreement to negotiate the Subsequent Agreement, the Subsequent Agreement ultimately ordered by the Commission, or negotiated by the Parties, will be effective upon the effective date set forth in the Subsequent Agreement.

2.4 Notwithstanding the foregoing and except as set forth in Section 2.4.1 below, if, as of the date of the expiration of this Agreement and extension of this Agreement pending replacement with a subsequent agreement, the Parties are not actively negotiating pursuant to Sections 251 and 252 of the Act for a Subsequent Agreement and no arbitration proceeding has been filed in accordance with Section 252 of the Act, then either Party may terminate this Agreement upon sixty (60) calendar days notice to the other Party. In the event that BellSouth terminates this Agreement as provided above, BellSouth shall continue to offer services to, and accept orders from, MCI pursuant to BellSouth's then current standard interconnection agreement or MCI may exercise its rights under Section 252(i) of the Act. In the event that BellSouth's standard interconnection agreement becomes effective as between the Parties or MCI adopts another agreement pursuant to Section 252(i) of the Act, the Parties may continue to negotiate a Subsequent Agreement, and the terms of such Subsequent Agreement shall be effective as of the effective date stated in such Subsequent Agreement.

2.4.1 If a Subsequent Agreement is being negotiated in accordance with Sections 251 and 252 of the Act, but negotiations are not completed, or if an arbitration proceeding has been filed in accordance with Section 252 of the Act, and if the Commission does not issue its order prior to the expiration of this Agreement, this Agreement shall be deemed extended and amendments can be negotiated to it until the Subsequent Agreement becomes effective. The terms of such Subsequent Agreement shall be effective as of the effective date stated in such Subsequent Agreement and shall not be applied retroactively to the expiration date of this Agreement unless the Parties agree otherwise. Unless provided otherwise in this Agreement, neither Party shall refuse to provide services to the other Party or to accept orders from the other Party during the good faith negotiation of the Subsequent Agreement or during the transition from this Agreement to the Subsequent Agreement or BellSouth’s standard interconnection agreement.

3 Nondiscriminatory Access

3.1 When MCI purchases Telecommunications Services from BellSouth pursuant to Attachment 1 of this Agreement for the purposes of resale to customers, such services shall be equal in quality,

subject to the same conditions, and provided within the same provisioning time intervals that BellSouth provides to its Affiliates, subsidiaries and customers. To the extent technically feasible, the quality of a Network Element, as well as the quality of the access to such Network Element provided by BellSouth to MCI shall be at least equal in quality to that which BellSouth provides to itself, its Affiliates or any other Telecommunications carrier. The quality of the interconnection between the network of BellSouth and the network of MCI shall be at a level that is equal to that which BellSouth provides itself, a subsidiary, an Affiliate, or any other party.

4 Court Ordered Requests for Call Detail Records and Other Subscriber Information

4.1 Subpoenas Directed to BellSouth. Where BellSouth provides resold services or local switching for MCI, BellSouth shall respond to subpoenas and court ordered requests delivered directly to BellSouth for the purpose of providing call detail records when the targeted telephone numbers belong to MCI customers. Billing for such requests will be generated by BellSouth and directed to the law enforcement agency initiating the request. BellSouth shall maintain such information for MCI customers for the same length of time it maintains such information for its own customers.

4.2 Subpoenas Directed to MCI. Where BellSouth is providing to MCI Telecommunications Services for resale or providing to MCI the local switching function, then MCI agrees that in those cases where MCI receives subpoenas or court ordered requests regarding targeted telephone numbers belonging to MCI customers, and where MCI does not have the requested information, MCI will advise the law enforcement agency initiating the request to redirect the subpoena or court ordered request to BellSouth for handling in accordance with 6.1 above.

4.3 In all other instances, where either Party receives a request for information involving the other Party's customers, the Party receiving the request will advise the law enforcement agency initiating the request to redirect such request to the other Party.

5 Liability and Indemnification

5.1 Liability for Acts or Omissions of Third Parties. Neither Party shall be liable to the other Party for any act or omission of another Telecommunications company providing services to the other Party.

5.2 Except for any indemnification obligations of the Parties hereunder, and except in cases of the provisioning Party's gross negligence or willful misconduct, each Party's liability to the other for any loss, cost, claim, injury, liability or expense, including reasonable attorneys' fees relating to or arising out of any negligent act or omission in its performance of this Agreement, whether in contract or in tort, shall be limited to a credit for the actual cost of the services or functions not performed or improperly performed.

5.3 Limitations in Tariffs. A Party may, in its sole discretion, provide in its tariffs and contracts with its customers and third parties that relate to any service, product or function provided or contemplated under this Agreement, that to the maximum extent permitted by Applicable Law, such Party shall not be liable to the customer or third party for (i) any loss relating to or arising out of this Agreement, whether in contract, tort or otherwise, that exceeds the amount such Party would have charged that applicable person for the service, product or function that gave rise to such loss and (ii) consequential damages. To the extent that a Party elects not to place in its tariffs or contracts such limitations of liability, and the other Party incurs a loss as a result thereof, such Party shall indemnify and reimburse the other Party for that portion of the loss that would have been limited had the first Party included in its tariffs and contracts the limitations of liability that such other Party included in its own tariffs at the time of such loss.

5.4 Neither BellSouth nor MCI shall be liable for damages to the other Party's terminal location, equipment or customers premises resulting from the furnishing of a service, including, but not limited to, the installation and removal of equipment or associated wiring, except to the extent caused by a Party's negligence or willful misconduct or by a Party's failure to ground properly a local loop after disconnection.

5.5 Under no circumstance shall a Party be responsible or liable for indirect, incidental, or consequential damages, including, but not limited to, economic loss or lost business or profits, damages arising from the use or performance of equipment or software, or the loss of use of software or equipment, or accessories attached thereto, delay, error, or loss of data. In connection with this limitation of liability, each Party recognizes that the other Party may, from time to time, provide advice, make recommendations, or supply other analyses related to the services or facilities described in this Agreement, and, while each Party shall use diligent efforts in this regard, the Parties acknowledge and agree that this limitation of liability shall apply to provision of such advice, recommendations, and analyses.

5.6 To the extent any specific provision of this Agreement purports to impose liability, or limitation of liability, on either Party different from or in conflict with the liability or limitation of liability set forth in this Section, then with respect to any facts or circumstances covered by such specific provisions, the liability or limitation of liability contained in such specific provision shall apply.

5.7 Indemnification for Certain Claims. The Party providing services hereunder, its Affiliates and its parent company, shall be indemnified, defended and held harmless by the Party receiving services hereunder against any claim, loss or damage arising from the receiving Party's use of the services provided under this Agreement pertaining to (1) claims for libel, slander or invasion of privacy arising from the content of the receiving Party's own communications, or (2) any claim, loss or damage claimed by the customers of the Party receiving services arising from such company's use or reliance on the providing Party's services, actions, duties, or obligations arising out of this Agreement.

5.8 Promptly after receipt of notice of any claim or the commencement of any action for which a Party may seek indemnification pursuant to this Agreement, such Party (the "Indemnified Party") shall provide written notice within a commercially reasonable timeframe to the other Party (the "Indemnifying Party") of such claim or action, but the failure to so notify the Indemnifying Party shall not relieve the Indemnifying Party of any liability it may have to the Indemnified Party except to the extent the Indemnifying Party has actually been prejudiced thereby. The Indemnifying Party shall be obligated to assume the defense of such claim, at its own expense. The Indemnified Party shall cooperate with the Indemnifying Party's reasonable requests for assistance or information relating to such claim, at the Indemnifying Party's expense. The Indemnified Party shall have the right to participate in the investigation and defense of such claim or action, with separate counsel chosen and paid for by the Indemnified Party. Unless the Indemnified Party chooses to waive its rights to be indemnified further in any claim or action, the Indemnified Party's counsel shall not interfere with the defense strategy chosen by the Indemnifying Party and its counsel, and the Indemnified Party's counsel shall not raise any claims, defenses, or objections or otherwise take a course of action in representation of the Indemnified Party when such course of action might be in conflict with a course of action or inaction chosen by the Indemnifying Party. The Indemnifying Party is not liable under this Agreement for settlements or compromises by the Indemnified Party of any claim, demand, or lawsuit unless the Indemnifying Party has approved the settlement or compromise in advance or unless the Indemnified Party has tendered the defense of the claim, demand, or lawsuit to the Indemnifying Party in writing and the Indemnifying Party has failed to promptly undertake the defense.

5.9 Disclaimer. EXCEPT AS OTHERWISE PROVIDED TO THE CONTRARY IN THIS AGREEMENT, NEITHER PARTY MAKES ANY REPRESENTATIONS OR WARRANTIES

TO THE OTHER PARTY CONCERNING THE SPECIFIC QUALITY OF ANY SERVICES, OR FACILITIES PROVIDED UNDER THIS AGREEMENT. THE PARTIES DISCLAIM, WITHOUT LIMITATION, ANY WARRANTY OR GUARANTEE OF MERCHANTABILITY OR FITNESS FOR A PARTICULAR PURPOSE, ARISING FROM COURSE OF PERFORMANCE, COURSE OF DEALING, OR FROM USAGES OF TRADE.

5.10 All rights of termination, cancellation or other remedies prescribed in this Agreement, or otherwise available, are cumulative and are not intended to be exclusive of other remedies to which the injured Party may be entitled at law or equity in case of any breach or threatened breach by the other Party of any provision of this Agreement. Use of one or more remedies shall not bar use of any other remedy for the purpose of enforcing the provisions of this Agreement. Nothing contained in this section 5.10 will allow either Party to circumvent the Dispute Resolution provisions set forth in Section 8 below.

6 Intellectual Property Rights and Indemnification

6.1 No License. Except for limited licenses, to the extent necessary for the Parties to use the facilities or equipment (including software) or to receive any services solely as provided under this Agreement, no patent, copyright, trademark or other proprietary right is licensed, granted or otherwise transferred by this Agreement. The Parties are strictly prohibited from any use, including but not limited to, in the selling, marketing, promoting or advertising of telecommunications services, of any name, service mark, logo or trademark (collectively, the "Marks") of the Other Party. The Marks include those Marks owned directly by a Party or its Affiliate(s). The Parties acknowledge that they are separate and distinct and that each provides a separate and distinct service and agree that neither Party may, expressly or impliedly, state, advertise or market that it is or offers the same service as the Other Party or engage in any other activity that may result in a likelihood of confusion between its own service and the service of the Other Party.

6.2 Ownership of Intellectual Property. Any intellectual property that originates from or is developed by a Party shall remain the exclusive property of that Party. Except for a limited, non-assignable, non-exclusive, non-transferable license to use patents or copyrights to the extent necessary for the Parties to use any facilities or equipment (including software) or to receive any service solely as provided under this Agreement, no license in patent, copyright, trademark or trade secret, or other proprietary or intellectual property right, now or hereafter owned, controlled or licensable by a Party, is granted to the other Party. Neither shall it be implied nor arise by estoppel. Any trademark, copyright or other proprietary notices appearing in association with the use of any facilities or equipment (including software) shall remain on the documentation, material, product, service, equipment or software. It is the responsibility of each Party to ensure at no additional cost to the other Party that it has obtained any necessary licenses in relation to intellectual property of third Parties used in its network that may be required to enable the other Party to use any facilities or equipment (including software), to receive any service, or to perform its respective obligations under this Agreement.

6.3 Intellectual Property Remedies

6.3.1 Indemnification. The Party providing a service pursuant to this Agreement will defend the Party receiving such service or data provided as a result of such service against claims of infringement arising solely from the use by the receiving Party of such service in the manner contemplated under this Agreement and will indemnify the receiving Party for any damages awarded based solely on such claims in accordance with Section 5 preceding.

6.3.2 Claim of Infringement. In the event that use of any facilities or equipment (including software), becomes, or in the reasonable judgment of the Party who owns the affected network is likely to become, the subject of a claim, action, suit, or proceeding based on intellectual property

infringement, then said Party shall promptly and at its sole expense and sole option, but subject to the limitations of liability set forth below:

6.3.2.1 modify or replace the applicable facilities or equipment (including software) while maintaining form and function, or

6.3.2.2 obtain a license sufficient to allow such use to continue.

6.3.2.3 In the event Section 6.3.2.1 or 6.3.2.2 are commercially unreasonable, then said Party may terminate, upon reasonable notice, this contract with respect to use of, or services provided through use of, the affected facilities or equipment (including software), but solely to the extent required to avoid the infringement claim.

6.3.3 Exception to Obligations. Neither Party's obligations under this Section shall apply to the extent the infringement is caused by: (i) modification of the facilities or equipment (including software) by the indemnitee; (ii) use by the indemnitee of the facilities or equipment (including software) in combination with equipment or facilities (including software) not provided or authorized by the indemnitor, provided the facilities or equipment (including software) would not be infringing if used alone; (iii) conformance to specifications of the indemnitee which would necessarily result in infringement; or (iv) continued use by the indemnitee of the affected facilities or equipment (including software) after being placed on notice to discontinue use as set forth herein.

6.3.4 Exclusive Remedy. The foregoing shall constitute the Parties' sole and exclusive remedies and obligations with respect to a third party claim of intellectual property infringement arising out of the conduct of business under this Agreement.

7 Proprietary and Confidential Information

7.1 Proprietary and Confidential Information. It may be necessary for BellSouth and MCI, each as the "Discloser," to provide to the other Party, as "Recipient," certain proprietary and confidential information including but not limited to technical, financial, marketing, staffing and business plans and information, strategic information, proposals, request for proposals, specifications, drawings, maps, prices, costs, costing methodologies, procedures, processes, business systems, software programs, techniques, customer account data, call detail records and like information (collectively the "Information"). All such Information conveyed in writing or other tangible form shall be clearly marked with a confidential or proprietary legend. Information conveyed orally by the Discloser to Recipient shall be designated as proprietary and confidential at the time of such oral conveyance, shall be reduced to writing by the Discloser within forty-five (45) calendar days thereafter, and shall be clearly marked with a confidential or proprietary legend. All usage records, customer-specific information (including, but not limited to local service requests, requests for customer service records, and maintenance and repair requests), and Customer Proprietary Network Information ("CPNI"), as that term is defined by the Act and the FCC, also shall be Information without being marked or separately identified as confidential. The Information described in the previous sentence shall be referred to herein as "Customer Information".

7.2 Use and Protection of Information. Recipient agrees to protect such Information of the Discloser provided to Recipient from whatever source from distribution, disclosure or dissemination to anyone except employees of Recipient with a need to know such Information solely in conjunction with Recipient's analysis of the Information and for no other purpose except as authorized herein or as otherwise authorized in writing by the Discloser. Recipient will not make any more copies of the Information inspected by it than are reasonably necessary for Recipient's authorized use.

7.3 Exceptions. Recipient will not have an obligation to protect any portion of the Information which:

7.3.1 (a) is made publicly available by the Discloser or lawfully by a nonparty to this Agreement; (b) is lawfully obtained by Recipient from any source other than Discloser; (c) is previously known to Recipient without an obligation to keep it confidential; or (d) is released from the terms of this Agreement by Discloser upon written notice to Recipient.

7.4 Recipient agrees to use the Information solely for the purposes of negotiations pursuant to 47 U.S.C. 251 or in performing its obligations under this Agreement and for no other entity or purpose, except as may be otherwise agreed to in writing by the Parties. Nothing herein shall prohibit Recipient from providing information requested by the FCC or a state regulatory agency with jurisdiction over this matter, or to support a request for arbitration or an allegation of failure to negotiate in good faith, or if required by a law, a court, or government agency; provided that Discloser has been notified of the requirement promptly after Recipient becomes aware of the requirement, and provided that Recipient undertakes all lawful measures to avoid disclosing such information until Discloser has had reasonable time to obtain a protective order. Recipient shall comply with any protective order that covers the Information.

7.4.1 BellSouth shall use MCI's Customer Information only for the purpose of providing service to MCI and shall not provide such Information to BellSouth's retail sales and marketing personnel.

7.5 Recipient agrees not to publish or use the Information for any advertising, sales or marketing promotions, press releases, or publicity matters that refer either directly or indirectly to the Information or to the Discloser or any of its affiliated companies.

7.6 The disclosure of Information neither grants nor implies any license to the Recipient under any trademark, patent, copyright, application or other intellectual property right that is now or may hereafter be owned by the Discloser.

7.7 Survival of Confidentiality Obligations. The Parties' rights and obligations under this Section 7 shall survive and continue in effect after the expiration or termination date of this Agreement with regard to all Information exchanged during the term of this Agreement.

8 Resolution of Disputes

8.1 Except as otherwise stated in this Agreement, the Parties agree that any dispute that arises as to the interpretation of any provision of this Agreement or as to the proper implementation of this Agreement, may be taken to the Commission for resolution. However, each Party reserves the rights it may have to seek judicial review of any ruling made by the Commission concerning this Agreement.

9 Taxes

9.1 Definition. For purposes of this Section, the terms "taxes" and "fees" shall include but not be limited to federal, state or local sales, use, excise, gross receipts or other taxes or tax-like fees of whatever nature and however designated (including tariff surcharges and any fees, charges or other payments, contractual or otherwise, for the use of public streets or rights of way, whether designated as franchise fees or otherwise) imposed, or sought to be imposed, on or with respect to the services furnished hereunder or measured by the charges or payments therefore, excluding any taxes levied on income.

9.2 Taxes and Fees Imposed Directly On Either Providing Party or Purchasing Party.

9.2.1 Taxes and fees imposed on the providing Party, which are not permitted or required to be passed on by the providing Party to its customer, shall be borne and paid by the providing Party.

9.2.2 Taxes and fees imposed on the purchasing Party, which are not required to be collected and/or remitted by the providing Party, shall be borne and paid by the purchasing Party.

9.3 Taxes and Fees Imposed on Purchasing Party But Collected And Remitted By Providing Party.

9.3.1 Taxes and fees imposed on the purchasing Party shall be borne by the purchasing Party, even if the obligation to collect and/or remit such taxes or fees is placed on the providing Party.

9.3.2 To the extent permitted by applicable law, any such taxes and/or fees shall be shown as separate items on applicable billing documents between the Parties. Notwithstanding the foregoing, the purchasing Party shall remain liable for any such taxes and fees regardless of whether they are actually billed by the providing Party at the time that the respective service is billed.

9.3.3 If the purchasing Party determines that in its opinion any such taxes or fees are not payable, the providing Party shall not bill such taxes or fees to the purchasing Party if the purchasing Party provides written certification, reasonably satisfactory to the providing Party, stating that it is exempt or otherwise not subject to the tax or fee, setting forth the basis therefor, and satisfying any other requirements under applicable law. If any authority seeks to collect any such tax or fee that the purchasing Party has determined and certified not to be payable, or any such tax or fee that was not billed by the providing Party, the purchasing Party may contest the same in good faith, at its own expense. In any such contest, the purchasing Party shall promptly furnish the providing Party with copies of all filings in any proceeding, protest, or legal challenge, all rulings issued in connection therewith, and all correspondence between the purchasing Party and the taxing authority.

9.3.4 In the event that all or any portion of an amount sought to be collected must be paid in order to contest the imposition of any such tax or fee, or to avoid the existence of a lien on the assets of the providing Party during the pendency of such contest, the purchasing Party shall be responsible for such payment and shall be entitled to the benefit of any refund or recovery.

9.3.5 If it is ultimately determined that any additional amount of such a tax or fee is due to the imposing authority, the purchasing Party shall pay such additional amount, including any interest and penalties thereon.

9.3.6 Notwithstanding any provision to the contrary, the purchasing Party shall protect, indemnify and hold harmless (and defend at the purchasing Party's expense) the providing Party from and against any such tax or fee, interest or penalties thereon, or other charges or payable expenses (including reasonable attorney fees) with respect thereto, which are incurred by the providing Party in connection with any claim for or contest of any such tax or fee.

9.3.7 Each Party shall notify the other Party in writing of any assessment, proposed assessment or other claim for any additional amount of such a tax or fee by a taxing authority; such notice to be provided, if possible, at least ten (10) calendar days prior to the date by which a response, protest or other appeal must be filed, but in no event later than thirty (30) calendar days after receipt of such assessment, proposed assessment or claim.

9.4 Taxes and Fees Imposed on Providing Party But Passed On To Purchasing Party.

9.4.1 Taxes and fees imposed on the providing Party, which are permitted or required to be passed on by the providing Party to its customer, shall be borne by the purchasing Party.

9.4.2 To the extent permitted by applicable law, any such taxes and/or fees shall be shown as separate items on applicable billing documents between the Parties. Notwithstanding the foregoing, the purchasing Party shall remain liable for any such taxes and fees regardless of whether they are actually billed by the providing Party at the time that the respective service is billed.

9.4.3 If the purchasing Party disagrees with the providing Party's determination as to the application or basis for any such tax or fee, the Parties shall consult with respect to the imposition and billing of such tax or fee. Notwithstanding the foregoing, the providing Party shall retain ultimate responsibility for determining whether and to what extent any such taxes or fees are applicable, and the purchasing Party shall abide by such determination and pay such taxes or fees to the providing Party. The providing Party shall further retain ultimate responsibility for determining whether and how to contest the imposition of such taxes and fees; provided, however, that any such contest undertaken at the request of the purchasing Party shall be at the purchasing Party's expense. If a purchasing Party disagrees with a providing Party's determination with respect to taxes, the purchasing party may pursue the dispute resolution provisions of this Agreement.

9.4.4 In the event that all or any portion of an amount sought to be collected must be paid in order to contest the imposition of any such tax or fee, or to avoid the existence of a lien on the assets of the providing Party during the pendency of such contest, the purchasing Party shall be responsible for such payment and shall be entitled to the benefit of any refund or recovery.

9.4.5 If it is ultimately determined that any additional amount of such a tax or fee is due to the imposing authority, the purchasing Party shall pay such additional amount, including any interest and penalties thereon.

9.4.6 Notwithstanding any provision to the contrary, the purchasing Party shall protect, indemnify and hold harmless (and defend at the purchasing Party's expense) the providing Party from and against any such tax or fee, interest or penalties thereon, or other reasonable charges or payable expenses (including reasonable attorneys' fees) with respect thereto, which are incurred by the providing Party in connection with any claim for or contest of any such tax or fee.

9.4.7 Each Party shall notify the other Party in writing of any assessment, proposed assessment or other claim for any additional amount of such a tax or fee by a taxing authority; such notice to be provided, if possible, at least ten (10) calendar days prior to the date by which a response, protest or other appeal must be filed, but in no event later than thirty (30) calendar days after receipt of such assessment, proposed assessment or claim.

9.4.8 Each Party will be solely responsible for the computation, tracking, reporting and payment of all taxes and like fees associated with the services it provides to its own customers.

9.5 Mutual Cooperation. In any contest of a tax or fee by one Party, the other Party shall cooperate fully by providing records, testimony and such additional information or assistance as may reasonably be necessary to pursue the contest. Further, the other Party shall be reimbursed for any reasonable and necessary out-of-pocket copying and travel expenses incurred in assisting in such contest.

10 Force Majeure

10.1 In the event performance of this Agreement, or any obligation hereunder, is either directly or indirectly prevented, restricted, or interfered with by reason of fire, flood, earthquake or like acts of God, wars, revolution, civil commotion, explosion, acts of public enemy, embargo, acts of the government in its sovereign capacity, labor difficulties, including without limitation, strikes, slowdowns, picketing, or boycotts, unavailability of equipment from vendor, changes requested by MCI, or any other circumstances beyond the reasonable control and without the fault or negligence of the Party affected ("Force Majeure Condition"), the Party affected, upon giving prompt notice to the other Party, shall be excused from such performance on a day-to-day basis to

the extent of such prevention, restriction, or interference (and the other Party shall likewise be excused from performance of its obligations on a day-to-day basis until the delay, restriction or interference has ceased); provided, however, that the Party so affected shall use diligent efforts to avoid or remove such causes of non-performance and both Parties shall proceed whenever such causes are removed or cease. In the event of such Force Majeure Condition, the Party so affected shall perform its obligations at a performance level no less than that which it performs for itself during Force Majeure Conditions and shall proceed in its performance in a nondiscriminatory manner.

11 Adoption of Agreements

11.1 Pursuant to 47 USC 252 (i) and 47 CFR 51.809, BellSouth shall make available to MCI any entire Interconnection Agreement filed and approved pursuant to 47 USC 252. The adopted agreement shall apply to the same states as the agreement that was adopted, and the term of the adopted agreement shall expire on the same date as set forth in the agreement that was adopted.

12 Modification of Agreement

12.1 If either Party changes its name or makes changes to its company structure or identity due to a merger, acquisition, transfer or any other reason, it is the responsibility of such Party to notify the other Party of said change and request that an amendment to this Agreement, if necessary, be executed to reflect said change.

12.2 No modification, amendment, supplement to, or waiver of the Agreement or any of its provisions shall be effective and binding upon the Parties unless it is made in writing and duly signed by the Parties.

12.3 In the event that any effective legislative, regulatory, judicial or other legal action materially affects any material terms of this Agreement, or the ability of MCI or BellSouth to perform any material terms of this Agreement, MCI or BellSouth may, on thirty (30) calendar days' written notice, require that such terms be renegotiated, and the Parties shall renegotiate in good faith such mutually acceptable new terms as may be required. In the event that such new terms are not renegotiated within ninety (90) calendar days after such notice, the Dispute shall be referred to the Dispute Resolution procedure set forth in this Agreement.

12.4 The Parties intend that any additional Services negotiated pursuant to 47 USC 251 and 252 and agreed to by the Parties will be incorporated into this Agreement by amendment.

13 Non-waiver of Legal Rights

13.1 Execution of this Agreement by either Party does not confirm or imply that the executing Party agrees with any decision(s) issued pursuant to the Telecommunications Act of 1996 and the consequences of those decisions on specific language in this Agreement. Neither Party waives its rights to appeal or otherwise challenge any such decision(s) and each Party reserves all of its rights to pursue any and all legal and/or equitable remedies, including appeals of any such decision(s).

14 Severability

14.1 If any part of this Agreement is held to be invalid for any reason, such invalidity will affect only the portion of this Agreement which is invalid. In all other respects this Agreement will stand as if such invalid provision had not been a part thereof, and the remainder of the Agreement shall remain in full force and effect; provided, however, that in the event such invalid provision or provisions are essential elements of this Agreement and substantially impair the rights or

obligations of either Party, the Parties shall promptly negotiate replacement provision(s) to restore as much as possible the original intent of the Parties.

15 Waivers

15.1 A failure or delay of either Party to enforce any of the provisions hereof, to exercise any option which is herein provided, or to require performance of any of the provisions hereof, or a course of dealing between the Parties**,** shall in no way be construed to be a waiver of such provisions or options with regard to future performance, and each Party, notwithstanding such failure, shall have the right thereafter to insist upon the performance of any and all of the provisions of this Agreement.

16 Governing Law

16.1 Where applicable, this Agreement shall be governed by and construed in accordance with federal and state substantive telecommunications law, including rules and regulations of the FCC and appropriate Commission. In all other respects, this Agreement shall be governed by and construed and enforced in accordance with the laws of the State of Georgia without regard to its conflict of laws principles.

17 Assignments

17.1 Any assignment by either Party to any non-affiliated entity of any right, obligation or duty, or of any other interest hereunder, in whole or in part, without the prior written consent of the other Party shall be void. A Party may assign this Agreement in its entirety to an Affiliate of the Party without the consent of the other Party; provided, however, that the assigning Party shall notify the other Party in writing of such assignment thirty (30) calendar days prior to the Effective Date thereof and, provided further, if the assignee is an assignee of MCI, the assignee must provide evidence of Commission certification. The Parties shall amend this Agreement to reflect such assignments and shall work cooperatively to implement any changes required due to such assignment. All obligations and duties of any Party under this Agreement shall be binding on all successors in interest and assigns of such Party. No assignment or delegation hereof shall relieve the assignor of its obligations under this Agreement in the event that the assignee fails to perform such obligations. Notwithstanding anything to the contrary in this Section, the assigning Party shall not assign this Agreement to any Affiliate or non-affiliated entity unless either (1) the assigning Party pays all undisputed bills, past due and current, owed to the other Party under this Agreement and remains liable for any disputed bills resolved in BellSouth's favor and any billing that occurs after the assignment date, for charges incurred prior to the assignment date (subject to the Billing Dispute provisions herein) or (2) the assigning Party's assignee expressly assumes liability for payment of such bills.

18 Notices

18.1 Every notice, consent, approval, or other communications required or contemplated by this Agreement (except for invoices and payment of invoices) shall be in writing and shall be delivered by hand, by overnight courier or by US mail postage prepaid, addressed to:

BellSouth Telecommunications, Inc.

BellSouth Local Contract Manager
600 North 19th Street, 8th floor
Birmingham, AL 35203

and

ICS Attorney
Suite 4300
675 West Peachtree Street
Atlanta, GA 30375

MCI, Inc.

To: Chief Network Counsel
Attn: Robert A. Peterson
1133 19th Street NW
Washington, DC 20036
Fax: (202) 736-6903

Director National Carrier Contracts and Initiatives
Attn: Peter H. Reynolds
22001 Loudoun County Parkway
Suite G2-3-614
Ashburn, VA 20147
Fax: (703) 886-0118

Copy to:
Senior Manager, Carrier Agreements
205 N. Michigan Avenue, 11th Floor
Chicago, IL 60601
Fax: (312) 470-5575

or at such other address as the intended recipient previously shall have designated by written notice to the other Party.

18.2 Unless otherwise provided in this Agreement, notice by mail shall be effective on the date it is officially recorded as delivered by return receipt or equivalent, and in the absence of such record of delivery, it shall be rebuttably presumed to have been delivered the fifth (5th) calendar day, or next business day after the fifth (5th) calendar day, after it was deposited in the mails.

18.3 BellSouth will post changes to business processes and policies, not requiring an amendment to this Agreement, notices required to be posted to BellSouth's website, and any other information of general applicability to CLECs, and should follow intervals according to the change control process in place.

19 Rule of Construction

19.1 No rule of construction requiring interpretation against the drafting Party hereof shall apply in the interpretation of this Agreement.

20 Headings of No Force or Effect

20.1 The headings of Articles and Sections of this Agreement are for convenience of reference only, and shall in no way define, modify or restrict the meaning or interpretation of the terms or provisions of this Agreement.

21 Multiple Counterparts

21.1 This Agreement may be executed in multiple counterparts, each of which shall be deemed an original, but all of which shall together constitute but one and the same document.

22 Filing of Agreement

22.1 Upon execution of this Agreement, BellSouth shall file it with the appropriate state regulatory agency pursuant to the requirements of Section 252 of the Act, and the Parties shall share equally any filing fees therefore. If the regulatory agency imposes any filing or public interest notice fees regarding the filing or approval of the Agreement, BellSouth shall be responsible for publishing the required notice and the publication and/or notice costs shall be borne by BellSouth. Notwithstanding the foregoing unless MCI has previously provided BellSouth with its certification for a state covered by this Agreement, this Agreement shall not be submitted for approval by the appropriate state regulatory agency unless and until such time as MCI is duly certified as a Telecommunications Carrier in such state, except as otherwise required by a Commission.

23 Compliance with Applicable Law

23.1 Each Party shall comply at its own expense with all applicable federal, state and local statutes, laws, regulations, codes, effective orders, injunctions, judgments and binding decisions, awards and decrees that relate to its obligations expressly provided under this Agreement ("Applicable Law"). This Agreement is intended to memorialize the Parties' mutual agreement with respect to their obligations under Applicable Law. Any reference to the Parties' complying with Applicable Law, or applicable FCC and Commission rules and orders may explain, but is not intended to expand, the obligations of the Parties as set forth herein.

24 Necessary Approvals

24.1 Each Party shall be responsible for obtaining and keeping in effect all approvals from, and rights granted by, governmental authorities, building and property owners, other carriers, and any other persons that may be required in connection with the performance of its obligations under this Agreement. Each Party shall reasonably cooperate with the other Party in obtaining and maintaining any required approvals and rights for which such Party is responsible.

25 Good Faith Performance

25.1 Each Party shall act in good faith in its performance under this Agreement and, in each case in which a Party's consent or agreement is required or requested hereunder, such Party shall not unreasonably withhold or delay such consent or agreement.

26 Nonexclusive Dealings

26.1 This Agreement does not prevent either Party from providing or purchasing services to or from any other person nor, except as provided in Section 252(i) of the Act, does it obligate either Party to provide or purchase any services (except insofar as the Parties are obligated to provide access to Interconnection, services and Network Elements to MCI as a requesting carrier under the Act).

27 Rate True-Up

27.1 This section applies to Network Interconnection and/or Unbundled Network Elements and Other Services rates that are expressly subject to true-up under this Agreement**.**

27.2 The designated true-up rates shall be trued-up, either up or down, based on final prices determined either by further agreement between the Parties, or by a final order (including any appeals) of the Commission. The Parties shall implement the true-up by comparing the actual volumes and demand for each item, together with the designated true-up rates for each item, with the final prices determined for each item. Each Party shall keep its own records upon which the true-up can be based, and any final payment from one Party to the other shall be in an amount

agreed upon by the Parties based on such records. In the event of any disagreement as between the records or the Parties regarding the amount of such true-up, the Parties shall submit the matter to the Dispute Resolution process in accordance with the provisions of this Agreement.

27.3 An effective order of the Commission that forms the basis of a true-up shall be based upon cost studies submitted by either or both Parties to the Commission and shall be binding upon BellSouth and MCI specifically or upon all carriers generally, such as a generic cost proceeding.

28 Survival

28.1 The Parties' obligations under this Agreement which by their nature are intended to continue beyond the termination or expiration of this Agreement shall survive the termination or expiration of this Agreement.

29 Entire Agreement

29.1 This Agreement means the General Terms and Conditions, the Attachments identified in Section 29.3 below, and all documents identified therein, as such may be amended from time to time and which are incorporated herein by reference, all of which, when taken together, are intended to constitute one indivisible agreement. This Agreement sets forth the entire understanding and supersedes prior agreements between the Parties relating to the subject matter contained in this Agreement and merges all prior discussions between them. Notwithstanding any prior agreement of the Parties, the rates, terms and conditions of this Agreement shall not be applied retroactively prior to the Effective Date unless ordered otherwise by the Commission, FCC or other entity with jurisdictional authority.

29.2 Any orders placed under prior agreements between the Parties shall be governed by the terms of this Agreement and MCI acknowledges and agrees that any and all amounts and obligations owed for services provisioned or orders placed under prior agreements between the Parties, related to the subject matter hereof, shall be due and owing under this Agreement and be governed by the terms and conditions of this Agreement as if such services or orders were provisioned or placed under this Agreement. Neither Party shall be bound by any definition, condition, provision, representation, warranty, covenant or promise other than as expressly stated in this Agreement or as is contemporaneously or subsequently set forth in writing and executed by a duly authorized officer or representative of the Party to be bound thereby.

29.3 This Agreement includes Attachments with provisions for the following:

Resale
Network Elements and Other Services
Network Interconnection
Collocation
Access to Numbers and Number Portability
Pre-Ordering, Ordering, Provisioning, Maintenance and Repair
Billing
Rights-of-Way, Conduits and Pole Attachments
Performance Measurements
BellSouth Disaster Recovery Plan
Bona Fide Request/New Business Request Process

30 Miscellaneous

30.1 In the case of a conflict between a provision of this Agreement and a tariff filed by either Party, if such tariff is referenced for the purposes of a service that is provisioned pursuant to such tariff, and there is a conflict between such referenced tariff provisions and this Agreement, the terms of

the tariff shall control. If the service is provisioned pursuant to this Agreement but the tariff is referenced for a rate, an interval or another purpose, to the extent that there is a conflict between such referenced tariff provision and this Agreement, and except as otherwise set forth in this Agreement, the conflict shall be resolved in favor of this Agreement.

30.2. If any Party's obligation under this Agreement is performed by a subcontractor or Affiliate of the obligated Party, the obligated Party nevertheless shall remain fully responsible for the performance of this Agreement in accordance with its terms, and shall be solely responsible for payments due its subcontractors or Affiliates. No subcontractor or Affiliate shall be deemed a third party beneficiary for any purposes under this Agreement.

30.3. Each Party is an independent contractor, and has and hereby retains the right to exercise full control of and supervision over its own performance of its obligations under this Agreement and retains full control over the employment, direction, compensation and discharge of all employees assisting in the performance of such obligations. Nothing contained in this Agreement shall be deemed to constitute the Parties as partners, joint venturers, or associates.

30.4. The Services provided under this Agreement are unique. As such, either Party may seek specific performance as a remedy.

30.5. BellSouth shall post on its web site any BellSouth interconnection agreement between BellSouth and any third party no later than ten (10) calendar days after such agreement becomes effective.

30.6. BellSouth shall make available to MCI fraud prevention or revenue protection features, including prevention, detection, or control functionality embedded within any of the Network Elements. To the extent separate charges apply for such features, the charges will be as set forth in this Agreement or will be negotiated between the Parties and added to this Agreement via an Amendment at such time as MCI requests the features.

30.7. Both Parties shall work cooperatively to comply with all legal or regulatory requirements related to number recording devices, including, for example, orders related to trap and trace and wire taps.

30.8. Unless otherwise indicated, all time periods described in days in this Agreement shall refer to calendar days.

30.9. Unless the context clearly indicates otherwise, words described in this Agreement should be construed to have the meanings given here. The word "shall" is used in this Agreement to mean, "has a duty to." The word "may" is used in this Agreement to mean, "is permitted to." The word "will" is used in this Agreement to denote a future event. The word "must" is used in this Agreement to denote a required characteristic of an inanimate or intangible object.

IN WITNESS WHEREOF, the Parties have executed this South Carolina Agreement the day and year written below.

BellSouth Telecommunications, Inc.	**MCImetro Access Transmission Services, L.L.C.**
By: Kristen E. Shore	By:
Name: Kristen E. Shore	Name: **Peter H. Reynolds**
Title: Director	Title: Director
Date: 10/6/06	Date: Sept 21, 2006

Version: 2Q06 Standard ICA
06/13/06

CCCS 23 of 497

ATTACHMENT 1

RESALE

TABLE OF CONTENTS

1. Discount Rates 3

2. General Provisions 3

3. BellSouth's Provision of Services to MCI 6

4. Maintenance of Services 7

5. Establishment of Service 7

6. Discontinuance of Service 7

7. Operator Services (Operator Call Processing and Directory Assistance) 8

8. Line Information Database (LIDB) 10

9. RAO Hosting 10

10. Optional Daily Usage File (ODUF) 10

11. Enhanced Optional Daily Usage File (EODUF) 10

Resale Restrictions ..... Exhibit A

Line Information Database (LIDB) Storage Agreement ..... Exhibit B

Optional Daily Usage File (ODUF)……. ..... …Exhibit C

Enhanced Option Daily Usage File (EODUF) ..... Exhibit D

Resale Discounts and Rates ..... Exhibit E

RESALE

1. DISCOUNT RATES

1.1 The discount rates applied to MCI purchases of BellSouth Telecommunications Services for the purpose of resale shall be as set forth in Exhibit E. Such discounts have been determined by the applicable Commission to reflect the costs avoided by BellSouth when selling a service for wholesale purposes.

1.2 The telecommunications services available for purchase by MCI for the purposes of resale to MCI's customers shall be available at BellSouth's tariffed rates less the discount set forth in Exhibit E to this Agreement and subject to the exclusions and limitations set forth in Exhibit A to this Agreement.

2. GENERAL PROVISIONS

2.1 Resale shall include all Telecommunications Services offered by BellSouth to parties other than telecommunications carriers, on a retail basis consistent with Section 251 (c)(4)(A) of the Act and 47 CFR 51.607(b), regardless of the particular tariff or other method by which such Telecommunications Services are offered.

2.1.1 When MCI provides Resale service in a cross boundary area (areas that are part of the local serving area of another state's exchange) the rates, regulations and discounts for the tariffing state will apply. Billing will be from the serving state.

2.2 MCI may purchase resale services from BellSouth for its own use in operating its business. The resale discount will apply to those services under the following conditions:

2.2.1 MCI must resell services to other customers.

2.2.2 MCI cannot be a competitive local exchange telecommunications company for the single purpose of selling to itself.

2.3 MCI will be the customer of record for all services purchased from BellSouth. Except as specified herein, BellSouth will take orders from, bill and receive payment from MCI for said services.

2.4 MCI will be BellSouth's single point of contact for all services purchased pursuant to this Agreement. BellSouth shall have no contact with the customers except to the extent provided for herein. Each Party shall provide to the other a nation wide (50 states) toll-free contact number for purposes of repair and maintenance.

2.5 BellSouth will continue to bill the customers for any services that the customers specifies it wishes to receive directly from BellSouth. BellSouth will continue to market directly its own telecommunications products and services and in doing so may establish independent relationships with customers of MCI. Neither Party shall interfere with the right of any person or entity to obtain service directly from the other Party.

2.5.1 When a customers of MCI or BellSouth elects to change his/her carrier to the other Party, both Parties agree to release the customer's service to the other Party concurrent with the due date of

the service order, which shall be established based on the standard interval for the customer's requested service as set forth in the most recent version of the BellSouth Local Ordering Handbook (LOH) found on BellSouth's interconnection website http://interconnection.bellsouth.com. If the customer has a local service freeze (LSF), BellSouth will not migrate the customer back or to another carrier until the customer has authorized the lifting of the LSF.

2.5.2 BellSouth and MCI will refrain from contacting a customer who has placed or whose selected carrier has placed on the customer's behalf an order to change the customer's service provider from BellSouth or MCI to the other Party until such time that the order for service has been completed.

2.6 Current telephone numbers may normally be retained by the customers and are assigned to the service furnished. However, neither Party nor the customers has a property right to the telephone number or any other call number designation associated with services furnished by BellSouth, and no right to the continuance of service through any particular central office. BellSouth reserves the right to change such numbers, or the central office designation associated with such numbers, or both, whenever BellSouth deems it necessary to do so in the conduct of its business and in accordance with BellSouth practices and procedures on a nondiscriminatory basis.

2.7 Where BellSouth provides resold services to MCI, BellSouth will provide MCI with on-line access to intermediate telephone numbers as defined by applicable FCC rules and regulations on a first come first served basis. MCI acknowledges that its use of such numbers shall be in accordance with the appropriate FCC rules and regulations. MCI acknowledges that there may be instances where there is a shortage of telephone numbers in a particular Common Language Location Identifier Code (CLLIC); and in such instances, MCI shall return unused intermediate telephone numbers to BellSouth upon BellSouth's request. BellSouth shall make all such requests on a nondiscriminatory basis.

2.8 BellSouth will allow MCI to designate up to 100 intermediate telephone numbers per CLLIC, for MCI's sole use. Assignment, reservation and use of telephone numbers shall be governed by applicable FCC rules and regulations. MCI acknowledges that there may be instances where there is a shortage of telephone numbers in a particular CLLIC and BellSouth has the right to limit access to blocks of intermediate telephone numbers. These instances include: 1) where jeopardy status has been declared by the North American Numbering Plan (NANP) for a particular Numbering Plan Area (NPA); or 2) where a rate center has less than six months supply of numbering resources.

2.9 Service is furnished subject to the condition that it will not be used for any unlawful purpose.

2.10 Service will be discontinued, in accordance with BellSouth tariffs applicable to the service, if any law enforcement agency advises that the service being used is in violation of the law.

2.11 BellSouth can refuse service, in accordance with BellSouth tariffs applicable to the service, when it has grounds to believe that service will be used in violation of the law.

2.12 BellSouth will cooperate with law enforcement agencies with subpoenas and court orders relating to MCI's customers, pursuant to Section 6 of the General Terms and Conditions.

2.13 If appropriate MCI personnel have actual knowledge that one of its customers is utilizing a BellSouth resold Telecommunication Service in a manner that is not consistent with the terms and conditions of the tariff applicable to such service, MCIm will take corrective action within

thirty (30) calendar days. Facilities and/or equipment utilized by BellSouth to provide service to MCI remain the property of BellSouth.

2.14 White page directory listings for MCI customers will be provided in accordance with Section 7 of Attachment 6 of the General Terms and Conditions.

2.15 Service Ordering and Operational Support Systems (OSS)

2.15.1 MCI must order services through resale interfaces, i.e., the Local Carrier Service Center (LCSC) and/or appropriate Complex Resale Support Group (CRSG) pursuant to this Agreement. BellSouth has developed and made available the interactive interfaces by which MCI may submit a Local Service Request (LSR) electronically as set forth in Attachment 2 of this Agreement. Service orders will be in a standard format designated by BellSouth.

2.15.2 LSRs submitted by means of one of these interactive interfaces will incur an OSS electronic charge as set forth in Exhibit E to this Agreement. An individual LSR will be identified for billing purposes by its Purchase Order Number (PON). LSRs submitted by means other than one of these interactive interfaces (Mail, fax, courier, etc.) will incur a manual order charge as set forth in Exhibit E to this Agreement. Supplements or clarifications to a previously billed LSR will not incur another OSS charge.

2.15.3 Denial/Restoral OSS Charge. In the event MCI provides a list of customers to be denied and restored, rather than an LSR, each location on the list will require a separate PON and therefore will be billed as one LSR per location.

2.15.4 Cancellation OSS Charge. MCI will incur an OSS charge for an accepted LSR that is later canceled.

2.16 Where available to BellSouth's customers, BellSouth shall provide the following telecommunications services at a discount to allow for voice mail services**:**

- Message Waiting Indicator ("MWI"), stutter dial tone and message waiting light feature capabilities
- Call Forward Busy Line ("CF/B")
- Call Forward Don't Answer ("CF/DA")

Further, BellSouth messaging services set forth in BellSouth's Messaging Service Information Package shall be made available for resale without the wholesale discount.

2.17 BellSouth shall provide branding for, or shall unbrand, voice mail services for MCI per the Bona Fide Request/New Business Request process as set forth in Attachment 6 of this Agreement.

2.18 BellSouth's Inside Wire Maintenance Service Plan is available for resale at rates, terms and conditions as set forth by BellSouth and without the wholesale discount.

2.19 In the event MCI acquires a customer whose service is provided pursuant to a BellSouth Special Assembly, BellSouth shall make available to MCI that Special Assembly at the wholesale discount at MCI's option. MCI shall be responsible for all terms and conditions of such Special Assembly including but not limited to termination liability if applicable.

2.20 BellSouth shall provide 911/E911 for MCI customers in the same manner that it is provided to BellSouth customers. BellSouth shall provide and validate MCI customer information to the PSAP. BellSouth shall use its service order process to update and maintain, on the same schedule that it uses for its customers, the MCI customer service information in the ALI/DMS (Automatic Location Identification/Location Information) databases used to support 911/E911 services.

2.21 BellSouth shall bill, and MCI shall pay, the customer's line charge associated with implementing Number Portability as set forth in BellSouth's FCC No. 1 tariff. This charge is not subject to the wholesale discount.

2.22 Pursuant to 47 CFR Section 51.617, BellSouth shall bill to MCI, and MCI shall pay, the customers common line charges identical to the customers common line charges BellSouth bills its customers.

3. BELLSOUTH'S PROVISION OF SERVICES TO MCI

3.1 Resale of BellSouth services shall be as follows:

3.1.1 The resale of telecommunications services shall be limited to users and uses conforming to the class of service restrictions.

3.1.2 The resale of Telecommunication Services shall be limited to customers and uses conforming to the class of service restrictions.

3.1.3 BellSouth reserves the right to periodically audit, through a third party independent auditor, services purchased by MCI to establish authenticity of use. Such audit shall not occur more than once in a calendar year. MCI shall make any and all records and data, pertaining to a customer's class of service, available to BellSouth's auditors on a reasonable basis. BellSouth shall bear the cost of said audit. Any information provided by MCI for purposes of such audit shall be deemed Confidential Information pursuant to the General Terms and Conditions of this Agreement.

3.2 Subject to Exhibit A hereto, resold services can only be used in the same manner as specified in BellSouth's Tariffs. Resold services are subject to the same terms and conditions as are specified for such services when furnished to an individual customer of BellSouth in the appropriate section of BellSouth's Tariffs. Specific tariff features (e.g. a usage allowance per month) shall not be aggregated across multiple resold services.

3.3 MCI may resell services only within the specific service area as defined in its certificate of operation approved by the Commission.

3.4 If MCI cancels an order for resold services, any costs incurred by BellSouth in conjunction with provisioning of such order will be recovered in accordance with BellSouth's tariffs.

3.5 <u>Service Jointly Provisioned with an Independent Company or Competitive Local Exchange Company Areas</u>

3.5.1 BellSouth will in some instances provision resold services jointly with an Independent Company or other Competitive Local Exchange Carrier.

3.5.2 When MCI assumes responsibility for such service; all terms and conditions defined in an applicable tariff will apply for services provided within the BellSouth service area only.

3.5.3 Service terminating in an Independent Company or other Competitive Local Exchange Carrier area will be provisioned and billed by the Independent Company or other Competitive Local Exchange Carrier directly to MCI.

3.5.4 MCI must establish a billing arrangement with the Independent Company or other Competitive Local Exchange Carrier prior to assuming a customer's account where such circumstances apply.

4. MAINTENANCE OF SERVICES

4.1 Services resold pursuant to this Attachment and BellSouth's tariffs and facilities and equipment provided by BellSouth shall be maintained by BellSouth.

4.2 MCI or its customers may not rearrange, move, disconnect, remove or attempt to repair any facilities owned by BellSouth except with the written consent of BellSouth.

4.3 MCI accepts responsibility to notify BellSouth of situations that arise that may result in a service problem.

4.4 MCI will contact the appropriate repair centers in accordance with procedures established by BellSouth.

4.5 BellSouth will bill MCI for handling troubles that are found not to be in BellSouth's network pursuant to its standard time and material charges. The standard time and material charges will be no more than what BellSouth charges to its retail customers for the same services.

4.6 BellSouth may need to contact MCI's customers, if deemed necessary, for trouble and repair. If such contact occurs it must comply with Applicable Law.

5. ESTABLISHMENT OF SERVICE

5.1 Establishment of an account for Resale will be done according to the terms of Section 1.2 of Attachment 7 of this Agreement.

5.2 MCI shall provide to BellSouth a blanket letter of authorization (LOA) certifying that MCI will have customer authorization prior to viewing the customer's customer service record or switching the customer's service. BellSouth will not require customer confirmation prior to establishing service for MCI's customers.

5.3 BellSouth will accept a request directly from the customers for conversion of the customer's service from MCI to BellSouth or will accept a request from another CLEC for conversion of the customer's service from MCI to such other CLEC. Upon completion of the conversion BellSouth will notify MCI that such conversion has been completed.

6. DISCONTINUANCE OF SERVICE

6.1 The procedures for discontinuing service to a customer are as follows:

6.1.1 BellSouth will deny service to MCI's customers on behalf of, and at the request of, MCI. Upon restoration of the customer's service, restoral charges will apply and will be the responsibility of MCI.

6.1.2 At the request of MCI, BellSouth will disconnect a MCI customer.

6.1.3 All requests by MCI for denial or disconnection of a customer for nonpayment must be in writing.

6.1.4 MCI will be made solely responsible for notifying the customers of the proposed disconnection of the service.

6.1.5 BellSouth will continue to process calls made to the Annoyance Call Center and will advise MCI when it is determined that annoyance calls are originated from one of its customer's locations. BellSouth shall be indemnified, defended and held harmless by MCI and/or the customers against any claim, loss or damage arising from providing this information to MCI. It is the responsibility of MCI to take the corrective action necessary with its customers who make annoying calls. BellSouth shall provide the same level of Annoyance Call Center service to MCI as BellSouth provides to its own customers.

7. OPERATOR SERVICES (OPERATOR CALL PROCESSING AND DIRECTORY ASSISTANCE)

Operator Call Processing provides: (1) operator handling for call completion (for example, collect, third number billing, and manual calling-card calls), (2) operator or automated assistance for billing after the customer has dialed the called number (for example, calling card calls); and (3) special services including but not limited to Busy Line Verification and Emergency Line Interrupt (ELI), Emergency Agency Call and Operator-assisted Directory Assistance.

7.1 Upon request for BellSouth Operator Call Processing, BellSouth shall:

7.1.1 Process 0+ and 0- dialed local calls

7.1.2 Process 0+ and 0- intraLATA toll calls.

7.1.3 Process calls that are billed to MCI customer's calling card that can be validated by BellSouth.

7.1.4 Process person-to-person calls.

7.1.5 Process collect calls.

7.1.6 Provide the capability for callers to bill a third party and shall also process such calls.

7.1.7 Process station-to-station calls.

7.1.8 Process Busy Line Verify and Emergency Line Interrupt requests.

7.1.9 Process emergency call trace originated by Public Safety Answering Points.

7.1.10 Process operator-assisted directory assistance calls.

7.1.11 Adhere to equal access requirements, providing MCI local customers the same IXC access that BellSouth provides its own operator service.

7.1.12 Exercise at least the same level of fraud control in providing Operator Service to MCI that BellSouth provides for its own operator service.

7.1.13 Perform Billed Number Screening when handling Collect, Person-to-Person, and Billed-To-Third-Party calls.

7.1.14 Direct customer account and other similar inquiries to the customer service center designated by MCI.

7.1.15 Provide call records to MCI in accordance with ODUF standards.

7.1.16 The interface requirements shall conform to the interface specifications for the platform used to provide Operator Services as long as the interface conforms to industry standards.

7.2 Directory Assistance Service

7.2.1 Directory Assistance Service provides local and non-local customers telephone number listings with the option to complete the call at the caller's direction separate and distinct from local switching.

7.2.2 Directory Assistance Service shall provide up to two listing requests per call, if available and if requested by MCI's customers. BellSouth shall provide caller-optional directory assistance call completion service at rates set forth in BellSouth's General Subscriber Services Tariff to one of the provided listings.

7.3 Directory Assistance Service Updates

7.3.1 BellSouth shall update customers listings changes daily. These changes include:

7.3.2 New customers connections

7.3.3 Customers disconnections

7.3.4 Customers address changes

7.3.5 These updates shall also be provided for non-listed and non-published numbers for use in emergencies.

7.4. Selective Call Routing using Line Class Codes (SCR-LCC)

7.4.1 Where MCI resells BellSouth's services and utilizes an operator services provider other than BellSouth, BellSouth will route MCI's customer’s calls to that provider through Selective Call Routing.

7.4.2 Selective Call Routing using Line Class Codes (SCR-LCC) provides the capability for MCI to have its Operator Call Processing and Directory Assistance (OCP/DA) calls routed to BellSouth's OCP/DA platform for BellSouth provided Custom Branded or Unbranded OCP/DA or to its own or an alternate OCP/DA platform for Self-Branded OCP/DA. SCR-LCC is only available if line class code capacity is available in the requested BellSouth end office switches.

7.4.3 Custom Branding for DA is not available for certain classes of service, including but not limited to Hotel/Motel services, WATS service and certain PBX services.

7.4.4 Where available, MCI specific and unique LLCs are programmed in each BellSouth end office switch where MCI intends to service customers with customized OCP/DA branding. The LCCs

specifically identify MCI's customers so OCP/DA calls can be routed over the appropriate trunk group to the requested OCP/DA platform. Additional line class codes are required in each end office if the end office serves multiple NPAs (i.e., a unique LCC is required per NPA), and/or if the end office switch serves multiple rate areas and MCI intends to provide MCI-branded OCP/DA to its customers in these multiple rate areas.

7.4.5 SCR-LCC supporting Custom Branding and Self Branding require MCI to order dedicated transport and trunking from each BellSouth end office identified by MCI, either to the BellSouth Traffic Operator Position System (TOPS) for Custom Branding or to the MCI Operator Service Provider for Self Branding. Separate trunk groups are required for OCP/DA. Rates for transport and trunks are set forth in applicable BellSouth Tariffs.

7.4.6 The rates for SCR-LCC are as set forth in Exhibit E of this Attachment. There is a nonrecurring charge for the establishment of each LCC in each BellSouth central office.

7.4.7 Unbranded DA and/or OCP calls ride common trunk groups provisioned by BellSouth from those end offices identified by MCI to the BellSouth Tops. The calls are routed to "No Announcement."

8. LINE INFORMATION DATABASE (LIDB)

8.1 BellSouth will store in its Line Information Database (LIDB) records relating to service only in the BellSouth region. The LIDB Storage Agreement is included in this Attachment as Exhibit B.

8.2 BellSouth will provide LIDB Storage upon written request to MCI’s Account Manager stating a requested activation date.

9. RAO HOSTING

9.1 RAO Hosting is not required for resale in the BellSouth region.

10. OPTIONAL DAILY USAGE FILE (ODUF)

10.1 The Optional Daily Usage File (ODUF) Agreement with terms and conditions is included in this Attachment as Exhibit C. Rates for ODUF are as set forth in Exhibit E of this Attachment.

10.2. BellSouth will provide ODUF service upon written request to its Account Manager stating a requested activation date.

11. ENHANCED OPTIONAL DAILY USAGE FILE (EODUF)

11.1 The Enhanced Optional Daily Usage File (EODUF) service Agreement with terms and conditions is included in this Attachment as Exhibit D. Rates for EODUF are as set forth in Exhibit E of this Attachment.

11.2 BellSouth will provide EODUF service upon written request to its Account Manager stating a requested activation date.

EXCLUSIONS AND LIMITATIONS ON SERVICES AVAILABLE FOR RESALE (Note 3)

	Type of Service	AL		FL		GA		KY		LA		MS		NC		SC		TN	
		Resale	Discount	Resale	Discount	Resale	Discount	Resale	Discount	Resale	Discount	Resale	Discount	Resale	Discount	Resale	Discount	Resale	Discount
1	Grandfathered Services (Note 1)	Yes	Yes	Yes	Yes	Yes	Yes	Yes	Yes	Yes	Yes	Yes	Yes	Yes	Yes	Yes	Yes	Yes	Yes
2	Promotions - > 90 Days (Note 2)	Yes	Yes	Yes	Yes	Yes	Yes	Yes	Yes	Yes	Yes	Yes	Yes	Yes	Yes	Yes	Yes	Yes	Yes
3	Promotions - ≤ 90 Days (Note 2)	Yes	No	Yes	No	Yes	No	Yes	No	Yes	No	Yes	No	Yes	No	Yes	No	Yes	No
4	Lifeline/Link Up Services	Yes	Yes	Yes	Yes	Yes	Yes	No	No	Yes	Yes	Yes	Yes	Yes	Yes	Yes	Yes	Yes	Yes
5	911/E911 Services	Yes	Yes	Yes	Yes	Yes	Yes	Yes	Yes	No	No	Yes	Yes	Yes	Yes	Yes	Yes	Yes	Yes
6	N11 Services	Yes	Yes	Yes	Yes	Yes	Yes	No	No	No	No	Yes	Yes	Yes	Yes	No	No	Yes	Yes
7	MemoryCall®Service	Yes	No	Yes	No	Yes	No	Yes	No	Yes	No	Yes	No	Yes	No	Yes	No	Yes	No
8	Mobile Services	Yes	No	Yes	No	Yes	No	Yes	No	Yes	No	Yes	No	Yes	No	Yes	No	Yes	No
9	Federal Subscriber Line Charges	Yes	No	Yes	No	Yes	No	Yes	No	Yes	No	Yes	No	Yes	No	Yes	No	Yes	No
10	Nonrecuring Charges	Yes	Yes	Yes	Yes	Yes	Yes	Yes	Yes	Yes	Yes	Yes	Yes	Yes	Yes	Yes	Yes	Yes	No
11	Customer Line Chg-Number Portability	Yes	No	Yes	No	Yes	No	Yes	No	Yes	No	Yes	No	Yes	No	Yes	No	Yes	No
12	Public Telephone Access Svc (PTAS)	Yes	Yes	Yes	Yes	Yes	Yes	Yes	Yes	Yes	Yes	Yes	Yes	Yes	Yes	Yes	No	Yes	Yes
13	Inside Wire Maint Service Plan	Yes	No	Yes	No	Yes	No	Yes	No	Yes	No	Yes	No	Yes	No	Yes	No	Yes	No

	Applicable Notes:
1.	Grandfathered services can be resold only to existing subscribers of the grandfathered service.
2.	Where available for resale, promotions will be made available only to customers who would have qualified for the promotion had it been provided by BellSouth directly.
3.	Some of BellSouth's local exchange and toll telecommunications services are not available in certain central offices and areas.

LINE INFORMATION DATA BASE (LIDB)

RESALE STORAGE AGREEMENT

I. DEFINITIONS (FROM ADDENDUM)

A. Billing number - a number used by BellSouth for the purpose of identifying an account liable for charges. This number may be a line or a special billing number.

B. Line number - a ten-digit number assigned by BellSouth that identifies a telephone line associated with a resold local exchange service.

C. Special billing number - a ten-digit number that identifies a billing account established by BellSouth in connection with a resold local exchange service.

D. Calling Card number - a billing number plus PIN number assigned by BellSouth.

E. PIN number - a four-digit security code assigned by BellSouth that is added to a billing number to compose a fourteen-digit calling card number.

F. Toll billing exception indicator - associated with a billing number to indicate that it is considered invalid for billing of collect calls or third number calls or both, by MCI.

G. Billed Number Screening - refers to the query service used to determine whether a toll billing exception indicator is present for a particular billing number.

H. Calling Card Validation - refers to the query service used to determine whether a particular calling card number exists as stated or otherwise provided by a caller.

I. Billing number information - information about billing number or Calling Card number as assigned by BellSouth and toll billing exception indicator provided to BellSouth by MCI.

J. Get-Data - refers to the query service used to determine, at a minimum, the Account Owner and/or Regional Accounting Office for a line number. This query service may be modified to provide additional information in the future.

K. Originating Line Number Screening ("OLNS") - refers to the query service used to determine the billing, screening and call handling indicators, station type and Account Owner provided to BellSouth by MCI for originating line numbers.

L. Account Owner - name of the local exchange telecommunications company that is providing dial tone on a subscriber line.

II. GENERAL

A. This Agreement sets forth the terms and conditions pursuant to which BellSouth agrees to store in its LIDB certain information at the request of MCI and pursuant to which BellSouth, its LIDB customers and MCI shall have access to such information. In addition, this Agreement sets forth the terms and conditions for MCI's provision of billing number information to BellSouth for inclusion in

BellSouth's LIDB. MCI understands that BellSouth provides access to information in its LIDB to various telecommunications service providers pursuant to applicable tariffs and agrees that information stored at the request of MCI, pursuant to this Agreement, shall be available to those telecommunications service providers. The terms and conditions contained herein shall hereby be made a part of this Resale Agreement upon notice to MCI's account team and/or Local Contract Manager activate this LIDB Storage Agreement. The General Terms and Conditions of the Resale Agreement shall govern this LIDB Storage Agreement. The terms and conditions contained in the attached Addendum are hereby made a part of this LIDB Storage Agreement as if fully incorporated herein.

B. BellSouth will provide responses to on-line, call-by-call queries to billing number information for the following purposes:

1. Billed Number Screening

   BellSouth is authorized to use the billing number information to determine whether MCI has identified the billing number as one that should not be billed for collect or third number calls.

2. Calling Card Validation

   BellSouth is authorized to validate a 14-digit Calling Card number where the first 10 digits are a line number or special billing number assigned by BellSouth, and where the last four digits (PIN) are a security code assigned by BellSouth.

3. OLNS

   BellSouth is authorized to provide originating line screening information for billing services restrictions, station type, call handling indicators, presubscribed interLATA and local carrier and account owner on the lines of MCI from which a call originates.

4. GetData

   BellSouth is authorized to provide, at a minimum, the account owner and/or Regional Accounting Office information on the lines of MCI indicating the local service provider and where billing records are to be sent for settlement purposes. This query service may be modified to provide additional information in the future.

5. Fraud Control

   BellSouth will provide seven days per week, 24-hours per day, fraud monitoring on Calling Cards, bill-to-third and collect calls made to numbers in BellSouth's LIDB, provided that such information is included in the LIDB query. BellSouth will establish fraud alert thresholds and will notify MCI of fraud alerts so that MCI may take action it deems appropriate.

III. RESPONSIBILITIES OF THE PARTIES

A. BellSouth will administer all data stored in the LIDB, including the data provided by MCI pursuant to this Agreement, in the same manner as BellSouth's data for BellSouth's customers. BellSouth shall not be responsible to MCI for any lost revenue that may result from BellSouth's administration of the LIDB pursuant to its established practices and procedures as they exist and as they may be changed by BellSouth in its sole discretion from time to time.

B. Billing and Collection Customers

BellSouth currently has in effect numerous billing and collection agreements with various interexchange carriers and billing clearing houses and as such these billing and collection customers ("B&C Customers") query BellSouth's LIDB to determine whether to accept various billing options from customers. Until such time as BellSouth implements in its LIDB and its supporting systems the means to differentiate MCI's data from BellSouth's data, the following shall apply:

(1) BellSouth will identify MCI customers originated long distance charges and will return those charges to the interexchange carrier as not covered by the existing B&C agreement. MCI is responsible for entering into the appropriate agreement with interexchange carriers for handling of long distance charges by their customers.

(2) BellSouth shall have no obligation to become involved in any disputes between MCI and B&C Customers. BellSouth will not issue adjustments for charges billed on behalf of any B&C Customer to MCI. It shall be the responsibility of MCI and the B&C Customers to negotiate and arrange for any appropriate adjustments.

IV. FEES FOR SERVICE AND TAXES

A. MCI will not be charged a fee for storage services provided by BellSouth to MCI, as described in this LIDB Resale Storage Agreement.

B. Sales, use and all other taxes (excluding taxes on BellSouth's income) determined by BellSouth or any taxing authority to be due to any federal, state or local taxing jurisdiction with respect to the provision of the service set forth herein will be paid by MCI in accordance with the tax provisions set forth in the General Terms and Conditions of this Agreement.

OPTIONAL DAILY USAGE FILE

1. Upon written request from MCI, BellSouth will provide the Optional Daily Usage File (ODUF) service to MCI pursuant to the terms and conditions set forth in this section.

2. MCI shall furnish all relevant information required by BellSouth for the provision of the ODUF.

3. The ODUF feed will contain billable messages that were carried over the BellSouth Network and processed in the BellSouth Billing System, but billed to a MCI customer.

4. Charges for ODUF will appear on MCI's monthly bills. The charges are as set forth in Exhibit E to this Attachment. ODUF charges are billed once a month for the previous month's usage. MCI will be billed at the ODUF rates that are in effect at the end of the previous month.

5. The ODUF feed will contain both rated and unrated messages. All messages will be in the standard Alliance for Telecommunications Industry Solutions (ATIS) EMI record format.

5.1 Messages that error in MCI's billing system will be the responsibility of MCI. If, however, MCI should encounter significant volumes of errored messages that prevent processing by MCI within its systems, BellSouth will work with MCI to determine the source of the errors and the appropriate resolution.

6. The following specifications shall apply to the ODUF feed.

6.1 <u>ODUF Message to be Transmitted</u>

6.1.1 The following messages recorded by BellSouth will be transmitted to MCI:

- Message recording for per use/per activation type services (examples: Three Way Calling, Verify, Interrupt, Call Return, etc.)
- Measured billable Local
- Directory Assistance messages
- IntraLATA Toll
- WATS and 800 Service
- N11
- Information Service Provider Messages
- Operator Services Messages
- Credit/Cancel Records
- Usage for Voice Mail Message Service

6.1.2 Rated Incollects (originated in BellSouth and from other companies) can also be on ODUF. Rated Incollects will be intermingled with BellSouth recorded rated and unrated usage. Rated Incollects will not be packed separately.

6.1.3 BellSouth will perform duplicate record checks on records processed to ODUF. Any duplicate messages detected will be deleted and not sent to MCI.

6.1.4 In the event that MCI detects a duplicate on ODUF they receive from BellSouth, MCI will drop the duplicate message and will not return the duplicate to BellSouth).

6.2 ODUF Physical File Characteristics

6.2.1 The ODUF will be distributed to MCI via CONNECT:Direct or Secure File Transfer Protocol (FTP) or another mutually agreed medium. The ODUF feed will be a variable block format. The data on the ODUF feed will be in a non-compacted EMI format (175 byte format plus modules). It will be created on a daily basis Monday through Friday except holidays. Details such as dataset name and delivery schedule will be addressed during negotiations of the distribution medium. There will be a maximum of one dataset per workday per OCN.

6.2.2 Data circuits (private line or dial-up) will be required between BellSouth and MCI for the purpose of data transmission when utilizing CONNECT:Direct. Where a dedicated line is required, MCI will be responsible for ordering the circuit, overseeing its installation and coordinating the installation with BellSouth. MCI will also be responsible for any charges associated with this line. Equipment required on the BellSouth end to attach the line to the mainframe computer and to transmit data will be negotiated on an individual case basis. Where a dial-up facility is required, dial circuits will be installed in the BellSouth data center by BellSouth and the associated charges assessed to MCI. Additionally, all message toll charges associated with the use of the dial circuit by MCI will be the responsibility of MCI. Associated equipment on the BellSouth end, including a modem, will be negotiated on an individual case basis between the Parties. All equipment, including modems and software, that is required on MCI end for the purpose of data transmission will be the responsibility of MCI.

6.2.3 If MCI utilizes Secure File Transfer Protocol (FTP) for data file transmission; purchase of the Secure File Transfer Protocol (FTP) software will be the responsibility of MCI.

6.3 ODUF Packing Specifications

6.3.1 A pack will contain a minimum of one message record or a maximum of 99,999 message records plus a pack header record and a pack trailer record. One transmission can contain a maximum of 99 packs and a minimum of one pack.

6.3.2 The OCN, From RAO, and Invoice Number will control the invoice sequencing. The From RAO will be used to identify to MCI which BellSouth RAO is sending the message. BellSouth and MCI will use the invoice sequencing to control data exchange. BellSouth will be notified of sequence failures identified by MCI and resend the data as appropriate.

The data will be packed using ATIS EMI records.

6.4 ODUF Pack Rejection

6.4.1 MCI will notify BellSouth within one business day of rejected packs (via the mutually agreed medium). Packs could be rejected because of pack sequencing discrepancies or a critical edit failure on the Pack Header or Pack Trailer records (i.e. out-of-balance condition on grand totals, invalid data

populated). Standard ATIS EMI Error Codes will be used. MCI will not be required to return the actual rejected data to BellSouth. Rejected packs will be corrected and retransmitted to MCI by BellSouth.

6.5 ODUF Control Data

MCI will send one confirmation record per pack that is received from BellSouth. This confirmation record will indicate MCI received the pack and the acceptance or rejection of the pack. Pack Status Code(s) will be populated using standard ATIS EMI error codes for packs that were rejected by MCI for reasons stated in the above section.

6.6 ODUF Testing

6.6.1 Upon request from MCI, BellSouth shall send test files to MCI for the ODUF. The Parties agree to review and discuss the file's content and/or format. For testing of usage results, BellSouth shall request that MCI set up a production (live) file. The live test may consist of MCI's employees making test calls for the types of services MCI requests on the ODUF. These test calls are logged by MCI, and the logs are provided to BellSouth. These logs will be used to verify the files. Testing will be completed within 30 calendar days from the date on which the initial test file was sent.

ENHANCED OPTIONAL DAILY USAGE FILE

1. Upon written request from MCI, BellSouth will provide the Enhanced Optional Daily Usage File (EODUF) service to MCI pursuant to the terms and conditions set forth in this section. EODUF will only be sent to existing ODUF subscribers who request the EODUF option.

2. MCI shall furnish all relevant information required by BellSouth for the provision of the EODUF.

3. The EODUF will provide usage data for local calls originating from resold Flat Rate Business and Residential Lines.

4. Charges for delivery of the EODUF will appear on MCI's monthly bills. EODUF charges are billed at the EODUF rates that are in effect at the end of the previous month. The charges are as set forth in Exhibit E to this Attachment.

5. All messages will be in the standard Alliance for Telecommunications Industry Solutions (ATIS) EMI record format.

6. Messages that error in the billing system of MCI will be the responsibility of MCI. If, however, MCI should encounter significant volumes of errored messages that prevent processing by MCI within its systems, BellSouth will work with MCI to determine the source of the errors and the appropriate resolution.

7. The following specifications shall apply to the EODUF feed.

7.1 <u>Usage To Be Transmitted</u>

7.1.1 The following messages recorded by BellSouth will be transmitted to MCI:

7.1.1.1 Customer usage data for flat rated local call originating from MCI's customers lines (1FB or 1FR). The EODUF record for flat rate messages will include:

Date of Call

From Number

To Number

Connect Time

Conversation Time

Method of Recording

From RAO

Rate Class

Message Type

Billing Indicators

Bill to Number

7.1.2 BellSouth will perform duplicate record checks on EODUF records processed to ODUF. Any duplicate messages detected will be deleted and not sent to MCI.

7.1.3 In the event that MCI detects a duplicate on EODUF they receive from BellSouth, MCI will drop the duplicate message (MCI will not return the duplicate to BellSouth).

7.2 Physical File Characteristics

7.2.1 The EODUF feed will be distributed to MCI via Connect: Direct, Secure File Transfer Protocol (FTP) or another mutually agreed medium. The EODUF messages will be intermingled among MCI's Optional Daily Usage File (ODUF) messages. The EODUF will be a variable block format. The data on the EODUF will be in a non-compacted EMI format (175 byte format plus modules). It will be created on a daily basis Monday through Friday except holiday.

7.2.2 Data circuits (private line or dial-up) may be required between BellSouth and MCI for the purpose of data transmission as set forth in Section 6.2.2 above.

7.2.3 If MCI utilizes Secure File Transfer Protocol (FTP) for data file transmission, purchase of the Secure File Transfer Protocol (FTP) software will be the responsibility of MCI.

7.3 Packing Specifications

7.3.1 A pack will contain a minimum of one message record or a maximum of 99,999 message records plus a pack header record and a pack trailer record. One transmission can contain a maximum of 99 packs and a minimum of one pack.

7.3.2 The OCN, From (RAO), and Invoice Number will control the invoice sequencing. The From RAO will be used to identify to MCI which BellSouth RAO is sending the message. BellSouth and MCI will use the invoice sequencing to control data exchange. BellSouth will be notified of sequence failures identified by MCI and resend the data as appropriate.

7.3.3 The data will be packed using ATIS EMI Records.

RESALE DISCOUNTS & RATES - South Carolina														Attachment: 1 Exh D			
CATEGORY		RATE ELEMENTS	Interim	Zone	BCS	USOC	RATES($)					Svc Order Submitted Elec per LSR	Svc Order Submitted Manually per LSR	Incremental Charge - Manual Svc Order vs. Electronic-1st	Incremental Charge - Manual Svc Order vs. Electronic-Add'l	Incremental Charge - Manual Svc Order vs. Electronic-Disc 1st	Incremental Charge - Manual Svc Order vs. Electronic-Disc Add'l
							Rec	Nonrecurring		Nonrecurring Disconnect		OSS Rates($)					
								First	Add'l	First	Add'l	SOMEC	SOMAN	SOMAN	SOMAN	SOMAN	SOMAN
APPLICABLE DISCOUNTS																	
		Residence %					14.80										
		Business %					14.80										
		CSAs %					8.98										
OPERATIONS SUPPORT SYSTEMS (OSS) - "STATE SPECIFIC RATES"																	
	NOTE: (1) CLEC should contact its contract negotiator if it prefers the "regional" OSS charges as offered by BellSouth. The OSS charges currently contained in this rate exhibit are the PSC state ordered "state specific" service ordering charges. CLEC may elect the regional service ordering charge, however, CLEC can not obtain a mixture of the two regardless if CLEC has a interconnection contract established in each of the 9 states.																
		OSS - Electronic Service Order Charge, Per Local Service Request (LSR) - Resale Only				SOMEC		4.03	0.00	3.41	0.00						
		OSS - Manual Service Order Charge, Per Local Service Request (LSR) - Resale Only				SOMAN		18.86	0.00	18.86	0.00						
ODUF/EODUF SERVICES																	
	OPTIONAL DAILY USAGE FILE (ODUF)																
		ODUF: Recording, per message					0.0000216										
		ODUF: Message Processing, per message					0.004704										
		ODUF: Message Processing, per Magnetic Tape provisioned					48.87										
		ODUF: Data Transmission (CONNECT:DIRECT), per message					0.00010863										
	ENHANCED OPTIONAL DAILY USAGE FILE (EODUF)																
		EODUF: Message Processing, per message					0.258301										

Attachment 2

Network Elements & Other Services

TABLE OF CONTENTS

1 INTRODUCTION 3

2 LOOPS 10

3 LINE SHARING 31

4 UNBUNDLED NETWORK ELEMENT COMBINATIONS 33

5 ENHANCED EXTENDED LINKS (EELS) 35

6 DEDICATED TRANSPORT AND DARK FIBER TRANSPORT 36

7 AUTOMATIC LOCATION IDENTIFICATION/DATA MANAGEMENT SYSTEM (ALI/DMS) 42

Rates ..... Exhibit A

Rates ..... Exhibit B

ACCESS TO NETWORK ELEMENTS AND OTHER SERVICES

1 **Introduction**

1.1 **"**Network Element**"** is defined to mean a facility or equipment MCI uses in the provision of a Telecommunications Service, as defined by Applicable Law. This Attachment sets forth rates, terms and conditions for unbundled Network Elements and combinations of unbundled Network Elements ("Combinations") that BellSouth agrees to offer to MCI in accordance with its obligations under Section 251(c)(3) of the Act.

1.2 Additionally, this Attachment sets forth the rates, terms and conditions for other facilities and services BellSouth makes available to MCI (Other Services). The rates for each unbundled Network Element and Combination are set forth in Exhibits A and B of this Attachment. If no rate is identified in this Agreement and applicable terms and conditions are set forth in the Agreement, the rate will be as negotiated by the Parties upon request by either Party, and amended into this Agreement. Until the negotiated rate is amended into this Agreement by the Parties, BellSouth shall provide the unbundled Network Element or Combination at BellSouth's proposed rate on an interim basis not subject to true-up. MCI will use its best efforts to execute the amendment adding this missing rate element within thirty (30) days of the date of receipt of the amendment and the amendment must be executed no later than sixty (60) days from the date of receipt of the proposed amendment. If MCI does not execute the amendment within sixty (60) days of receipt of the proposed amendment, the interim rate shall expire, and MCI will no longer be able to order the service until the amendment is executed. Any future changes to the specific rate being amended by Commission order will be via an amendment on a prospective basis only.

1.2.1 BellSouth shall not charge MCI different rates for unbundled Network Elements provided pursuant to this Agreement based on the class of customers served by, MCI or on the type of services provided by MCI using those unbundled Network Elements, unless otherwise ordered by the Commission.

1.3 BellSouth shall, upon request of MCI, and to the extent technically feasible, provide to MCI access to its Network Elements for the provision of MCI's Telecommunications Services. BellSouth shall provide Network Elements and Other Services in accordance with Applicable Law, including but not limited to: 47CFR 51.307, 51.309, 51.311, 51.313, 51.315, 51.316, 51.318, and 51.319.

1.3.1 In accordance with 47 C.F.R. 51.321, if BellSouth denies MCI access to any Network Element based on a claim that it is not technically feasible, BellSouth shall have the burden of proving that the provision of such Network Element is not technically feasible.

1.3.2 BellSouth shall permit MCI to connect MCI's facilities or facilities provided to MCI by third parties with each of BellSouth's unbundled Network Elements at any technically feasible point, and BellSouth shall provide MCI access to the MCI side of such demarcation points.

1.3.3 Subject to Section 1.3, MCI may use one or more unbundled Network Elements to provide any telecommunications service utilizing any feature, function, capability, or service option that such Network Element(s), or combination of Network Elements, are capable of providing or any feature, function, capability, or service option that is described in the technical references identified herein.

1.3.4 MCI may, at its option, combine, at demarcation points, a Network Element with any other Network Element to the extent technically feasible.

1.4 BellSouth shall provide, and MCI may purchase and use, Network Elements and Other Services in accordance with 47 C.F.R 51.309.

1.5 BellSouth shall comply with the requirements as set forth in the technical references within this Attachment 2.

1.6 **Conversion of Wholesale Services to Network Elements or Network Elements to Wholesale Services**

1.6.1 Upon request, BellSouth shall convert a wholesale service, or group of wholesale services, to the equivalent Network Element, or Combination that is available to MCI under this Agreement or convert a Network Elements or Combination that is available to MCI under this Agreement to an equivalent wholesale services or group of wholesale services offered by BellSouth (collectively "Conversion(s)"). NRC switch-as-is rates, as contained in Exhibit A, of this Attachment, shall apply to a conversion of wholesale services to Network Elements. Any price change resulting from the Conversion(s) will be effective as of the next billing cycle following BellSouth's receipt of a complete and accurate Conversion request from MCI. Conversion of a wholesale service or group of wholesale services shall be considered termination for purposes of any volume and/or term commitments, termination liability provisions in the applicable special access tariffs, and/or grandfathered status between MCI and BellSouth.

1.6.2 Any change from a wholesale service (e.g. Special Access DS0 from a customer location to a BellSouth CO via the customer's BellSouth CO) to a Network Element (e.g. UNE-L) that requires a physical rearrangement of the Network Element will not be considered a conversion for purposes of this Agreement and the NRC of the Network Element being changed to will apply. BellSouth will not require physical rearrangements if the conversion can be completed through record changes only and a switch-as-is charge will apply rather than a NRC. If MCI requests a Conversion, MCI must submit a spreadsheet for Conversions that would qualify as a project or a single Local Service Request (LSR) for Conversions that are not a project (and a commingling ordering document that indicates which part is to be filled as a UNE, if applicable).

1.7 Except to the extent expressly provided otherwise in this Attachment, MCI may not maintain unbundled network elements or combinations of unbundled network elements, that are no longer offered pursuant to this Agreement, such as enterprise switching (collectively "Arrangements"). If BellSouth determines that MCI has in place any Arrangements after the Effective Date of this Agreement, BellSouth shall provide MCI with thirty (30) days written notice to disconnect or convert such Arrangements. If MCI fails to submit orders to disconnect or convert such Arrangements within such thirty (30) day period, BellSouth will transition such circuits to the equivalent tariffed BellSouth service(s).

1.7.1 For FLORIDA, GEORGIA, NORTH CAROLINA and TENNESSEE, those circuits identified and transitioned by BellSouth pursuant to this Section 1.7 shall be subject to any applicable disconnect charges as ordered by the Commission in [Docket No. 041269-TP (Florida)/Docket No. 19341-U (Georgia)/Docket No. P-55, Sub 1549 (North Carolina)/Docket No. 04-00381 (Tennessee)]. Installation of equivalent tariffed BellSouth service shall be ordered, provisioned, and billed pursuant to the rates, terms, and conditions of the applicable tariffs.

1.7.2 For ALABAMA, KENTUCKY, LOUISIANA, MISSISSIPPI AND SOUTH CAROLINA, those circuits identified and transitioned by BellSouth pursuant to this Section 1.7 shall be subject to all applicable disconnect charges as set forth in this Agreement. Installation of equivalent tariffed

BellSouth service shall be ordered, provisioned, and billed pursuant to the rates, terms, and conditions of the applicable tariffs.

1.8 Prior to submitting an order pursuant to this Agreement for high capacity (DS1 or above) Dedicated Transport or high capacity Loops, MCI shall undertake a reasonably diligent inquiry to determine whether MCI is entitled to unbundled access to such Network Elements in accordance with the terms of this Agreement. In performing its reasonably diligent inquiry, MCI shall consider the Initial Wire Center List and the Subsequent Wire Center List compiled by BellSouth in addition to any other sources MCI deems appropriate. By submitting any such order, MCI self-certifies that to the best of MCI's knowledge, the high capacity Dedicated Transport or high capacity Loop requested is available as a Network Element pursuant to this Agreement. Upon receiving such order, BellSouth shall process the request in reliance upon MCI's self-certification. To the extent BellSouth believes that such request does not comply with the terms of this Agreement, BellSouth shall seek dispute resolution in accordance with this Section. Nothing in this section 1.8 shall have the effect of shifting the burden to MCI of proving that a wire center does not meet the criteria for nonimpairment in the event of a dispute regarding the wire centers. Notwithstanding anything to the contrary provided in this Agreement, any dispute between the Parties related to MCI's self certification and whether high capacity Dedicated Transport or Loops are available as Network Elements in a particular wire center shall be brought to the Commission for resolution. In the event such dispute is resolved in BellSouth's favor, BellSouth shall bill MCI the difference between the rates for such circuits pursuant to this Agreement and the applicable nonrecurring and recurring charges for the equivalent tariffed service from the date of installation to the date the circuit is transitioned to the equivalent tariffed service. Within thirty (30) days following a decision finding in BellSouth's favor, MCI shall submit a spreadsheet identifying those non-compliant circuits to be transitioned to tariffed services or disconnected.

1.9 BellSouth will perform Routine Network Modifications (RNM) in accordance with FCC 47 C.F.R. § 51.319 (a)(7) and (e)(4) for Loops and Dedicated Transport provided under this Attachment. If a Network Element is not readily available but can be made available through routine network modifications (RNMs), as defined by the FCC, BellSouth shall advise MCI and MCI may request BellSouth to perform such RNMs. Each request will be handled as a project on an individual case basis. BellSouth will provide a price quote for the request, and upon receipt of payment by MCI, BellSouth shall perform the RNMs. BellSouth is under no obligation to, and therefore will not, place fiber as a part of this process.

1.10 **Commingling of Services**

1.10.1 Commingling means the connecting, attaching, or otherwise linking of a Network Element, or a Combination, to one or more Telecommunications Services or facilities that MCI has obtained at wholesale from BellSouth, or the combining of a Network Element or Combination with one or more such wholesale Telecommunications Services or facilities.

1.10.2 Subject to the limitations set forth elsewhere in this Attachment, BellSouth shall not deny access to a Network Element or a Combination on the grounds that one or more of the elements: 1) is connected to, attached to, linked to, or combined with such a facility or service obtained from BellSouth; or 2) shares part of BellSouth's network with access services or inputs for mobile wireless services and/or interexchange services.

1.10.3 BellSouth will not "ratchet" a commingled circuit. Unless otherwise agreed to by the Parties, the Network Element portion of such circuit will be billed at the rates set forth in this Agreement and the remainder of the circuit or service will be billed in accordance with the documents (e.g., agreement or tariff) controlling the pricing of such remainder of the circuit or service.

1.10.4 When multiplexing equipment is attached to a commingled circuit, the multiplexing equipment will be billed from the same jurisdictional authorization as the higher bandwidth and Central Office Channel Interfaces will be billed from the same jurisdictional authorization (e.g., agreement or tariff) as the lower bandwidth.

1.10.5 Notwithstanding any other provision of this Agreement, BellSouth is not required to commingle or combine Network Elements or Combinations with any service, network element or other offering that BellSouth makes available solely pursuant to Section 271 of the Act. However, nothing herein shall prohibit BellSouth from commingling Network Elements with tariff offerings pursuant to a separate agreement, regardless of whether such tariff offerings also constitute BellSouth 271 compliant offerings. Notwithstanding the foregoing, MCI may physically perform the work required to combine Network Elements with any Telecommunications service. All products and services purchased pursuant to a separate agreement or tariff with which Network Elements are commingled or combined will be subject to the rates, terms and conditions of the Applicable tariff or separate agreement within which the specific products and services are offered**.**

1.11 **Rates**

1.11.1 Unless otherwise specifically provided for in this Agreement and subject to Section 1.3 of this Attachment, for individually ordered Network Elements provided under this Attachment, which are ordered independently and not pursuant to a Combination or Commingling request, the charges as set forth in Exhibit A and/or B to this Attachment for the Network Element, the applicable OSS charge for the order, and the charge for the Cross-connect(s), if required are inclusive and no other charges apply other than special application charges (e.g, special construction (SC) or customer initiated service change request). Unless otherwise specifically provided for in this Agreement and subject to Section 1.3 of this Attachment, for Combinations of Network Elements provided under this Attachment, the charges as set forth in Exhibit A and/or B to this Attachment for the Network Element, the applicable OSS charge for the order, and the charge for the Cross-connect(s), if required are inclusive and no other charges apply other than special application charges (e.g, SC or customer initiated service change request,) . Where a Currently Combined Combination is not specifically set forth in Exhibit A, the rate for such Currently Combined Combination shall be the sum of the recurring rates for those individual Network Elements as set forth in Exhibit A and/or Exhibit B in addition to the applicable nonrecurring switch-as-is charge set forth in Exhibit A. Where an Ordinarily Combined Combination is not specifically set forth in Exhibit A, the rate for such Ordinarily Combined Combination shall be the sum of the recurring rates for those individual Network Elements as set forth in Exhibit A and/or Exhibit B and nonrecurring rates for those individual Network Elements as set forth in Exhibit A. Notwithstanding the foregoing, in the event MCI Commingles Network Elements or Combinations purchased under this Agreement with other wholesale Telecommunications Services or facilities, additional charges may apply to the services not purchased under this Agreement. BellSouth and MCI agree to attempt in good faith to resolve any alleged errors or omissions in Exhibit A and/or B of this Attachment.

1.11.2 BellSouth shall provide Not Typically Combined Combinations to MCI at the rates developed pursuant to the BFR process.

1.12 Cancellation Charges. If MCI cancels a request for Network Elements or resold services, any costs incurred by BellSouth in conjunction with the provisioning of that request will be recovered in accordance with the cancellation charges set forth in the following matrices. The Parties acknowledge that these charts are for the existing billing systems that BellSouth uses. Should these billing systems be modified/eliminated at some future date the Parties agree to negotiate the new terms and conditions for the Cancellation Charge.

CABS CANCELLATION CHARGE MATRIX

FCC 1 Service Type: (BCS)	If your Critical Dates are:								
	On/ After:	**APP**	**DLRD**	**RID**	**DVA**	**WOT**	**FCD**	**PTD**	**DD**
	Before:	**DLRD**	**RID**	**DVA**	**WOT**	**FCD**	**PTD**	**DD**	
Voice Grade Copper Loop 2/4 wire Loop		No Cancellation Charges Apply - Bill **SOMAN** or **SOMEC** ONLY	13.20%	18.70 %	33.20%	44.60 %	56.60%	83.60%	100.00 %
High Cap DS1 DS3 STS-1		Apply - Bill **SOMAN** or **SOMEC** ONLY	37.50%	42.90 %	55.70%	66.20 %	69.90%	86.20%	100.00 %
Digital Data ADSL HDSL Digital Loop Universal Digital Channel ISDN		No Cancellation Charges Apply - Bill **SOMAN** or **SOMEC** ONLY	13.50%	18.60 %	28.50%	35.40 %	46.20%	78.20%	100.00 %

Acronyms:

APP = Application Date - IDENTIFIES THE DATE THAT THE CLEC GIVES THE ICSC AN ORDER WITH SUFFICIENT INFORMATION TO ALLOW A SERVICE ORDER TO BE ISSUED AND FOR WHICH ALL NEGOTIATIONS HAVE BEEN COMPLETED, INCLUDING AGREEMENT ON CRITICAL DATE.

CDLRD = Confirming Design Layout Report Date - IDENTIFIES THE DATE THAT THE CDLR IS TO BE RECEIVED AT THE BELLSOUTH DESIGN CONTROL OFFICE.

DLRD = Designed Layout Report Date - DESIGN LAYOUT REPORT DATE IDENTIFIES THE DATE THAT THE DLR IS TO BE FORWARDED TO THE CLEC.

DVA = Designed, Verified, & Assigned Date - DATE ON WHICH IMPLEMENTATION GROUPS ARE TO REPORT THAT ALL DOCUMENTS AND MATERIAL HAVE BEEN RECEIVED.

DD = Service Date (a.k.a. - Due Date) - IDENTIFIES THE DATE THAT THE ORDER GENERATED FROM THIS SERVICE REQUEST IS DUE TO BE COMPLETED.

EIRD = Engineering Information Report Date - DATE ON WHICH THE CONTROL GROUP IS SCHEDULED TO RECEIVE AN EIR FROM LOCAL DESIGN GROUPS.

FCD = Frame Continuity Date - DATE ON WHICH FRAME THROUGH FRAME CONTINUITY IS ASSURED.

LAM = Loop Assignment & Make-up Date – DATE ON WHICH LOOP IS ASSIGNED AND LOOP MAKE UP IS PROVIDED.

PTD = Plant Test Date - DATE ON WHICH OVERALL TESTING IS TO BE STARTED.

RID = Record Issue Date – DATE THAT ALL ENGINEERING RECORDS/SERVICE ORDERS FOR INSTALLATION GROUP(S) ARE TO BE ISSUED.)

SID = Scheduled Issue Date - SCHEDULED ISSUE DATE IDENTIFIES THE DATE THE ICSC WILL ISSUE THE FIRM ORDER FOR THE SERVICE.

WOT = Wired & Office Tested Date – DATE THAT THE CIRCUIT IS WIRED ON THE FRAMES AND HAS BEEN TESTED THROUGH THE CENTRAL OFFICE(S).

CRIS/TAPESTRY/IBS CANCELLATION CHARGE MATRIX

Unbundled Product Category	**Basic Class of Service**	**Percentage billed if the status of the order is:**	**Percentage billed if the order is cancelled *before the Due Date* and the status of the order is:**	**Percentage billed *on or after the Due Date* and:**	
		PF or AO	**PD**	**The status of the order is MA or PD**	**The status of the order is CP or PC, or the CD field has been populated with a date**
Unbundled Voice Loop - SL1	UEANL	0%	25%	100%	The order cannot be cancelled; it has been completed. If the CLEC doesn't want the service, they must send an LSR to disconnect the Circuit ID.
Unbundled Copper Sub Loop	UEF	0%	25%	100%	
Unbundled Copper Loop - Non-Design	UEQ	0%	25%	100%	
Unbundled Network Terminating Wire	UENTW	0%	25%	100%	

Acronyms:

PF = Pending Facilities PD = Pending Order MA = Missed Appointment
AO = Assignable Order PC = Post Completion CD = Completion Date
CP = Completed Order

1.12.1 Notwithstanding the foregoing, if MCI places an LSR based upon BellSouth's Loop makeup information, and such information is inaccurate resulting in the inability of BellSouth to provision the network elements requested and another spare compatible facility cannot be found with the transmission characteristics of the network elements originally requested, cancellation charges described in this Section shall not apply. Where MCI places a single LSR for multiple network elements or services based upon Loop makeup information, and information as to some, but not all, of the network elements or services is inaccurate, if BellSouth cannot provision the network elements or services that were the subject of the inaccurate Loop makeup information, MCI may cancel its request for those network elements or services without incurring cancellation charges as described in this Section. In such instance, should MCI elect to cancel the entire LSR, cancellation charges as described in this Section shall apply to those elements and services that were not the subject of inaccurate Loop makeup.

1.13 Service Date Advancement Charges (a.k.a. Expedite Charges). For Service Date Advancement requests by MCI, Service Date Advancement charges will apply for intervals less than the standard interval, provided that the interval is as requested or agreed to by MCI. If BellSouth provides an interval less than the standard interval, but greater than the interval requested and the expedited interval is agreed to by MCI, Service Date Advancement charges will apply. If the expedited interval is not agreed to by MCI, Service Date Advancement charges will not apply. Service Date Advancement charges are set forth in Exhibit A to this Attachment.

1.13.1 If MCI modifies an order (Order Modification Charge (OMC)) after being sent a Firm Order Confirmation (FOC) from BellSouth, the OMC or Order Modification Charge Additional

Dispatch (OMCAD) will be paid by MCI in accordance with the OMC or OMCAD charges set forth in Exhibit A to this Attachment.

1.13.2 A one-month minimum billing period shall apply to all Network Elements and Other Services.

1.13.3 Except as otherwise provided in this Agreement, BellSouth will not require MCI to own or control any local exchange facilities as a condition of offering to MCI any Network Element or Combinations.

1.13.4 BellSouth will identify to MCI the location(s) of possible demarcation points available to MCI to access unbundled Network Elements and MCI will designate from these options the point(s) of demarcation between MCI's network and BellSouth's network. BellSouth shall not require that a demarcation point exist between combinations of Network Elements.

1.13.5 Unless otherwise requested by MCI, each unbundled Network Element shall be provided in accordance with 47CFR 51.311 and 51.319. BellSouth shall provide to MCI, upon request, engineering, design, performance and other network data sufficient for MCI to determine that the requirements of this subsection are being met. In the event that such data indicates that the requirements of this subsection are not being met, BellSouth shall, within ten (10) calendar days, use commercially reasonable efforts to cure any design, performance or other deficiency, or, if the failure is not susceptible to cure within ten (10) calendar days, shall commence and continue commercially reasonable efforts to correct such failure as soon as possible, and provide new data sufficient for MCI to determine that such deficiencies have been cured.

2 **Loops**

2.1 The local Loop Network Element is defined as a transmission facility between a distribution frame (or its equivalent) in BellSouth's central office and the Loop demarcation point at a customer's premises (Loop), including inside wire owned by BellSouth. Facilities that do not terminate at a demarcation point at a customer premises, including, by way of example, but not limited to, facilities that terminate to another carrier's switch or premises, a cell site, Mobile Switching Center or base station, do not constitute Loops. The Loop Network Element includes all features, functions, and capabilities of the transmission facilities, including the network interface device (NID), and attached electronics (except those used for the provision of advanced services, such as Digital Subscriber Line Access Multiplexers), optronics and intermediate devices (including repeaters and load coils) used to establish the transmission path to the customer premises. Except as otherwise provided in this Agreement, MCI shall be entitled to use the entire bandwidth of a Loop purchased by MCI, and, except as required herein or as otherwise agreed to by the Parties, BellSouth shall not subdivide the frequency of the Loop. The Loop and subloops shall be provided, maintained and repaired to MCI in accordance with applicable industry standards. For those Loops (or associated Loop attributes) and subloops for which there is no applicable industry standard, BellSouth will use BellSouth's Technical Reference 73600 (TR73600) – "Unbundled Local Loop – Technical Specifications".

2.1.1 For ease of reference, the Parties agree to use certain non-industry standard terms for various Loop types that have been offered by BellSouth (e.g. SL1, SL2, etc.). By agreeing to use these terms, MCI does not concede that these Loops provided by BellSouth are not, or are not required to be, Loops conforming to standard industry requirements. MCI does not agree that BellSouth may apply TR73600 technical requirements to these Loops simply by virtue of BellSouth's use of non-industry standard terms to describe these Loop types. Except as otherwise expressly provided in this Agreement, it is the intention of the Parties that all Loop types required to be provided under Applicable Law are included in this Agreement.

2.1.2 The Loop does not include any packet switched features, functions or capabilities.

2.1.3 Fiber to the Home (FTTH) Loops are local Loops consisting entirely of fiber optic cable, whether dark or lit, serving a customer premises or, in the case of predominantly residential multiple dwelling units (MDUs), a fiber optic cable, whether dark or lit, that extends to the MDU minimum point of entry (MPOE). Fiber to the Curb (FTTC) Loops are local Loops consisting of fiber optic cable connecting to a copper distribution plant that is not more than 500 feet from the customer's premises or, in the case of predominantly residential MDUs, not more than 500 feet from the MDU's MPOE. The fiber optic cable in a FTTC Loop must connect to a copper distribution plant at a serving area interface from which every other copper distribution subloop also is not more than 500 feet from the respective customer's premises.

2.1.3.1 In new build (Greenfield) areas, where BellSouth has only deployed FTTH/FTTC facilities, BellSouth is under no obligation to provide such FTTH and FTTC Loops.

2.1.3.2 In FTTH/FTTC overbuild situations where BellSouth also has copper Loops, BellSouth will make those copper Loops available to MCI on an unbundled basis, until such time as BellSouth chooses to retire those copper Loops using the FCC's network disclosure requirements. In these cases, BellSouth will offer a 64kbps second voice grade channel over its FTTH/FTTC facilities. BellSouth's retirement of copper Loops must comply with Applicable Law.

2.1.4 Retirement of Copper Loops. Prior to retiring any copper Loop (that has been replaced with a FTTH/FTTC) used by MCI, BellSouth shall comply with the requirements for retirement of copper set forth in Applicable Law, including 47 CFR 51.325. Furthermore, in FTTH/FTTC overbuild areas, BellSouth is not obligated to ensure that copper Loops in that area are capable of transmitting signals prior to receiving a request for access to such Loops by MCI. If a request is received by BellSouth for a copper Loop, and the copper facilities have not yet been retired, BellSouth will restore the copper Loop to serviceable condition if technically feasible. In these instances of Loop orders in an FTTH/FTTC overbuild area, BellSouth's standard Loop provisioning interval will not apply, and the order will be handled on a project basis by which the Parties will negotiate the applicable provisioning interval.

2.1.5 A hybrid Loop is a local Loop, composed of both fiber optic cable, usually in the feeder plant, and copper twisted wire or cable, usually in the distribution plant. BellSouth shall provide MCI with nondiscriminatory access to the time division multiplexing features, functions and capabilities of such hybrid Loop on an unbundled basis to establish a complete transmission path between BellSouth's central office and a customer premises.

2.1.6 The provisioning of a Loop to MCI's collocation space will require MCI to provide cross office cabling from the collocation arrangement to the MDF or LGX or DSX panel using a BellSouth Certified Supplier and BellSouth to provide cross-connections on the MDF or LGX or DSX panel within the central office to connect the Loop to a local switch or to other transmission equipment. The cross-connects provided by BellSouth are separate components that are not considered a part of the Loop, and thus, have a separate MRC, but not NRC, as set forth in Exhibit A and/or B of this Attachment.

2.1.7 **Transition for Non-impaired DS1 and DS3 Loops**

2.1.7.1 For purposes of this Section 2, the Transition Period for the Embedded Base of DS1 and DS3 Loops and for the Excess DS1 and DS3 Loops (defined in Section 2.1.7.3) is the twelve (12) month period beginning March 11, 2005 and ending March 10, 2006.

2.1.7.2 For purposes of this Section 2, Embedded Base means DS1 and DS3 Loops that were in service for MCI as of March 10, 2005 in those wire centers that, as of such date, met the criteria set forth in Sections 2.1.7.5.1 or 2.1.7.5.2. Subsequent disconnects or loss of customers shall be removed from the Embedded Base.

2.1.7.3 Excess DS1 and DS3 Loops are those MCI DS1 and DS3 Loops in service as of March 10, 2005, in excess of the caps set forth in Sections 2.3.6.2 and 2.3.10, respectively. Subsequent disconnects or loss of customers shall be removed from Excess DS1 and DS3 Loops.

2.1.7.4 For purposes of this Section 2, a Business Line is defined in 47 C.F.R. § 51.5.

2.1.7.5 Notwithstanding anything to the contrary in this Agreement, and except as set forth in Section 2.1.7.12, BellSouth shall make available DS1 and DS3 Loops as described in this Section 2.1.7 only for MCI's Embedded Base during the Transition Period:

2.1.7.5.1 DS1 Loops at any location within the service area of a wire center containing 60,000 or more Business Lines and four (4) or more fiber-based collocators.

2.1.7.5.2 DS3 Loops at any location within the service area of a wire center containing 38,000 or more Business Lines and four (4) or more fiber-based collocators.

2.1.7.6 A list of wire centers meeting the criteria set forth in Sections 2.1.7.5.1 and 2.1.7.5.2 above as of March 10, 2005 (Initial Wire Center List), is available on BellSouth's Interconnection Services Web site at www.interconnection.bellsouth.com.

2.1.7.7 Notwithstanding the Effective Date of this Agreement, during the Transition Period, the rates for MCI's Embedded Base of DS1 and DS3 Loops and MCI's Excess DS1 and DS3 Loops described in this Section 2.1.7 shall be as set forth in Exhibit B.

2.1.7.8 The Transition Period shall apply only to (1) MCI's Embedded Base and (2) MCI's Excess DS1 and DS3 Loops,.MCI shall not add new DS1 or DS3 loops as described in this Section 2.1.7 pursuant to this Agreement, except pursuant to the self-certification process as set forth in Section 1.8 of this Attachment and as set forth in Section 2.1.7.12 below.

2.1.7.9 Once a wire center exceeds both of the thresholds set forth in Sections 2.1.7.5.1 and 2.1.7.5.2, no future DS1 Loop unbundling will be required in that wire center.

2.1.7.10 Once a wire center exceeds both of the thresholds set forth in Sections 2.1.7.5.1 and 2.1.7.5.2, no future DS3 Loop unbundling will be required in that wire center.

2.1.7.11 For FLORIDA, GEORGIA, NORTH CAROLINA and TENNESSEE, MCI shall submit spreadsheet(s) as ordered by the Commission in [Docket No. 041269-TP (Florida)/Docket No. 19341-U (Georgia)/Docket No. P-55, Sub 1549 (North Carolina)/Docket No. 04-00381 (Tennessee)] identifying all of the Embedded Base of circuits to be either disconnected or Converted to other BellSouth services as Conversions pursuant to Section 1.6, including circuits for those wire centers that MCI disputes as having met the thresholds set forth in Sections 2.1.7.5.1 and 2.1.7.5.2. The Parties shall negotiate a project schedule for the Conversion of the Embedded Base, including any circuits added following the submission of MCI's initial spreadsheet.

For ALABAMA, KENTUCKY, LOUISIANA, MISSISSIPPI and SOUTH CAROLINA, no later than December 9, 2005, MCI shall submit spreadsheet(s) identifying all of the Embedded Base of circuits to be either disconnected or Converted to other BellSouth services as Conversions pursuant to Section 1.6, including circuits for those wire centers that MCI disputes as having met the thresholds set forth in Sections 2.1.7.5.1 and 2.1.7.5.2. The Parties shall negotiate a project schedule for the Conversion of the Embedded Base, including any circuits added following the submission of MCI's initial spreadsheet.

2.1.7.11.1 For FLORIDA, GEORGIA, NORTH CAROLINA and TENNESSEE, if MCI fails to submit the spreadsheet(s) specified in Section 2.1.7.11 above for all of its Embedded Base as ordered by the Commission in [Docket No. 041269-TP (Florida)/Docket No. 19341-U (Georgia)/Docket No. P-55, Sub 1549 (North Carolina)/Docket No. 04-00381 (Tennessee)], BellSouth will identify MCI's remaining Embedded Base, if any, and will transition such circuits to the equivalent tariffed BellSouth service(s). Those circuits identified and transitioned by BellSouth pursuant to this Section 2.1.7.11.1 shall be subject to all applicable disconnect charges as set forth in this Agreement and the full non-recurring charges for installation of the equivalent tariffed BellSouth service as set forth in BellSouth's tariffs, unless otherwise ordered by the Commission in the above referenced Dockets.

For ALABAMA, KENTUCKY, LOUISIANA, MISSISSIPPI and SOUTH CAROLINA, if MCI fails to submit the spreadsheet(s) specified in Section 2.1.7.11 above for all of its Embedded Base prior to December 9, 2005, BellSouth will identify MCI's remaining Embedded Base, if any, and will transition such circuits to the equivalent tariffed BellSouth service(s). Those circuits identified and transitioned by BellSouth pursuant to this Section 2.1.7.11.1 shall be subject to all applicable disconnect charges as set forth in this Agreement and the full non-recurring charges for installation of the equivalent tariffed BellSouth service as set forth in BellSouth's tariffs.

2.1.7.11.2 For Embedded Base circuits Converted pursuant to Section 2.1.7.11 or transitioned pursuant to 2.1.7.11.1, a recurring tariff charge shall apply to each circuit as of the earlier of the date each circuit is Converted or transitioned, as applicable, or March 11, 2006.

2.1.7.12 Modifications and Updates to the Wire Center List and Subsequent Transition Periods

2.1.7.12.1 In the event BellSouth identifies additional wire centers that meet the criteria set forth in Section 2.1.7.5, but that were not included in the Initial Wire Center List, BellSouth shall include such additional wire centers in a carrier notification letter ("CNL"). Each such list of additional wire centers shall be considered a "Subsequent Wire Center List".

2.1.7.12.2 Effective ten (10) business days after the date of a BellSouth CNL providing a Subsequent Wire Center List that includes one (1) or more additional wire centers, BellSouth shall not be required to unbundle DS1 and/or DS3 Loops, as applicable, in such additional wire center(s), except pursuant to the self-certification process as set forth in Section 1.8 of this Attachment.

2.1.7.12.3 For purposes of Section 2.1.7.12, BellSouth shall make available DS1 and DS3 Loops that were in service for MCI as of the tenth (10th) business day after the date of BellSouth's CNL identifying the Subsequent Wire Center List ("Subsequent Embedded Base") until ninety (90) days after the tenth (10th) business day from the date of BellSouth's CNL identifying the Subsequent Wire Center List ("Subsequent Transition Period").

2.1.7.12.4 Subsequent disconnects or loss of customers shall be removed from the Subsequent Embedded Base.

2.1.7.12.5 The rates set forth in Exhibit B shall apply to the Subsequent Embedded Base during the Subsequent Transition Period.

2.1.7.12.6 No later than forty (40) days from BellSouth's CNL identifying the Subsequent Wire Center List MCI shall submit a spreadsheet(s) identifying the Subsequent Embedded Base of circuits to be disconnected or Converted to other BellSouth services, including circuits for those wire centers that MCI disputes as having met the thresholds set forth in Sections 2.1.7.5.1 and 2.1.7.5.2. The Parties shall negotiate a project schedule for the Conversion of the Subsequent Embedded Base, including any circuits added following the submission of MCI's initial spreadsheet.

2.1.7.12.6.1 If MCI fails to submit the spreadsheet(s) specified in Section 2.1.7.12.6 above for all of its Subsequent Embedded Base, within forty (40) days after the date of BellSouth's CNL identifying the Subsequent Wire Center List, BellSouth will identify MCI's remaining Subsequent Embedded Base, if any, and will transition such circuits to the equivalent tariffed BellSouth service(s). Those circuits identified and transitioned by BellSouth shall be subject to the applicable disconnect charges as set forth in this Agreement and the full non-recurring charges for installation of the equivalent tariffed BellSouth service as set forth in BellSouth's tariffs.

2.1.7.12.6.2 For Subsequent Embedded Base circuits Converted pursuant to Section 2.1.7.12.6 or transitioned pursuant to Section 2.1.7.12.6.1, the recurring tariff charges shall apply as of the earlier of the date each circuit is Converted or transitioned or the first day after the end of the Subsequent Transition Period.

2.1.8 Where facilities are available, BellSouth will install Loops at intervals in compliance with Attachment 6. For orders of fifteen (15) or more Loops on a single order, the installation and any applicable Order Coordination as described below will be handled on a project basis, and the intervals will be set by the BellSouth project manager for that order. When Loops require a Service Inquiry (SI) prior to issuing the order to determine if facilities are available, the interval for the SI process is separate from the installation interval.

2.1.8.1 BellSouth will only provision, maintain and repair the Loops to the standards that are consistent with the type of Loop ordered.

2.1.8.2 When a BellSouth technician is required to be dispatched to provision the Loop, BellSouth will tag the Loop with the Circuit ID number and the name of the ordering CLEC. When a dispatch is not required to provision the Loop, BellSouth will tag the Loop on the next required visit to the customer's location. If MCI wants to ensure the Loop is tagged during the provisioning process for Loops that may not require a dispatch (e.g. UVL-SL1, UVL-SL2, and UCL-ND), MCI may order Loop Tagging. Rates for Loop Tagging are as set forth in Exhibit A of this Attachment.

2.1.9 <u>Loop Testing/Trouble Reporting</u>.

2.1.9.1 MCI shall use commercially reasonable efforts to test and isolate the trouble to the BellSouth Loop before reporting a trouble to the UNE Customer Wholesale Interconnection Network Services (CWINS) Center.

2.1.9.2 Once MCI has issued a trouble report to BellSouth on the Loop, BellSouth will take the actions necessary to repair the Loop if a trouble actually exists. BellSouth will repair these Loops in the same time frames that BellSouth repairs similarly situated Loops to its customers.

2.1.9.3 If MCI reports a trouble on a Network Element or Other Service and no trouble actually exists on the BellSouth portion, BellSouth will charge MCI, at the rates set forth in Exhibit A of this Attachment, for any dispatching and testing (both inside and outside the central office (CO)) required by BellSouth in order to confirm the working status. MCI agrees to waive its right to a billing dispute for each No Trouble Found/Maintenance of Service charge for which no documentation is provided by MCI upon request from BellSouth. The documentation provided may consist of the notes or statements by MCI's technicians and other personnel regarding the testing work performed.

2.1.9.4 In the event BellSouth must dispatch to the customer's location more than once due to incorrect or incomplete information provided by MCI (e.g., incomplete address, incorrect contact name/number, etc.), BellSouth will bill MCI for each additional dispatch required to provision or

repair the circuit due to the incorrect/incomplete information provided, in accordance with Maintenance of Service rates set forth in Exhibit A to this Attachment. BellSouth will provide proof that the requirement for multiple dispatches was based on MCI errors in the trouble ticket. This information will be provided upon request by MCI.

2.1.9.5 For voice grade Loop orders (or Loops intended to provide voice grade services), for which MCI orders a migration of existing service, MCI shall have its dial-tone available forty-eight (48) hours prior to the Loop order completion due date. For voice grade Loop orders for which MCI does not order a migration of existing service, MCI's failure to have such dial-tone available shall not affect BellSouth's processing of the order, but BellSouth shall not be responsible for its inability to test such Loop if no dial-tone is present.

2.1.10 Order Coordination and Order Coordination-Time Specific.

2.1.10.1 "Order Coordination" (OC) allows BellSouth and MCI to coordinate the installation of the SL2 Loops, Unbundled Digital Loops (UDL) and other Loops where OC may be purchased as an option, to MCI's facilities to limit customer service outage. OC is available when the Loop is provisioned over an existing circuit that is currently providing service to the customer OC for physical conversions will be scheduled at BellSouth's discretion during normal working hours on the committed due date. OC shall be provided in accordance with the chart set forth below.

2.1.10.2 "Order Coordination – Time Specific" (OC-TS) allows MCI to order a specific time for OC to take place. MCI may request a date and time for OC-TS. BellSouth will make commercially reasonable efforts to accommodate MCI's specific conversion time request. However, BellSouth reserves the right to negotiate with MCI a conversion time based on load and appointment control when necessary. This OC-TS is a chargeable option for all Loops except Unbundled Copper Loops (UCL) and is billed in addition to the OC charge. If MCI specifies a time outside of 9:00 a.m. to 4:00 p.m. (location time) Monday through Friday (excluding holidays), or selects a time or quantity of Loops that requires BellSouth technicians to work outside normal work hours, overtime charges will apply in addition to the OC and OC-TS charges. Overtime charges will be applied based on the amount of overtime worked. The OC-TS charges for an order due on the same day at the same location will be applied on a per Local Service Request (LSR) basis.

2.1.11 CLEC to CLEC (C2C) Conversions for Unbundled Loops.

2.1.11.1 The (C2C) conversion process for Loops may be used by MCI when converting an existing Loop from another CLEC for the same customer. The Loop type being converted must be included in MCI's Interconnection Agreement before requesting a conversion.

2.1.11.2 To utilize the (C2C) conversion process, the Loop being converted must be the same Loop type with no requested changes to the Loop, must serve the same customer location from the same serving wire center, and must not require an outside dispatch to provision.

2.1.11.3 The Loops converted to MCI pursuant to the (C2C) conversion process shall be provisioned in the same manner and with the same functionality and options as described in this Attachment for the specific Loop type.

	Order Coordination (OC)	**Order Coordination – Time Specific (OC-TS)**	**Test Points**	**DLR**	**Charge for Dispatch and Testing if No Trouble Found**

SL-1 **(Non-Designed)**	Chargeable Option	Chargeable Option	Not available	Chargeable Option – ordered as Engineering Information Document	Charged for Dispatch inside and outside Central Office
UCL-ND **(Non-Designed)**	Chargeable Option	Not Available	Not Available	Chargeable Option – ordered as Engineering Information Document	Charged for Dispatch inside and outside Central Office
Unbundled Voice Loops – SL-2 (including 2- and 4-wire UVL) (Designed)	Included	Chargeable Option	Included	Included	Charged for Dispatch outside Central Office
Unbundled Digital Loop (Designed)	Included	Chargeable Option	Included (where appropriate)	Included	Charged for Dispatch outside Central Office
Unbundled Copper Loop (Designed)	Chargeable in accordance with Section 2	Not available	Included	Included	Charged for Dispatch outside Central Office
For UVL-SL1 and UCLs, MCI must order and will be billed for both OC and OC-TS if requesting OC-TS.					

2.1.12 Bulk Migration.

2.1.12.1 BellSouth will make available to MCI a Bulk Migration process pursuant to which MCI may request to migrate port/loop combinations, provisioned pursuant to either a pre-existing Interconnection Agreement, a separate agreement between the Parties or otherwise, to Loops (UNE-L). The Bulk Migration process may be used if such port/loop combinations are (1) associated with two (2) or more Existing Account Telephone Numbers (EATNs); and (2) located in the same Central Office on the same due date. The terms and conditions for use of the Bulk Migration process are described in the BellSouth UNE-P to UNE-L Bulk Migration CLEC Information Package, incorporated herein by reference as it may be amended from time to time. The CLEC Information package is located at www.interconnection.bellsouth.com/guides/html/unes.html. The rates for the Bulk Migration process shall be the nonrecurring rates associated with the Loop type being requested on the Bulk Migration, as set forth in Exhibit A of this Attachment. The DS0 and voice grade Local Loop types are Unbundled Voice Loop - Service Level 1 (UVL-SL1); Unbundled Voice Loop - Service Level 2 (UVL-SL2); and the Unbundled Copper Loop - Non Designed (UCL-ND). The rates for Bulk Migration will be as set forth in Exhibit A. Additionally, OSS charges will also apply. Loops connected to Integrated Digital Loop Carrier (IDLC) systems will be migrated pursuant to Section 2.6 below. MCI may use the bulk migration process to migrate its existing loop/port

combinations, including those existing loop/port combinations provided under a separate agreement between BellSouth and MCI for loop/port combinations purchased by MCI from BellSouth, to itself or a 3rd party switching vendor/CLEC. Nothing in this Agreement, however, shall be interpreted or construed to modify restrictions on migrations contained in such separate agreement. MCI will follow the Blanket LOA process defined in the Third Party Collocation CLEC Information Package found on BellSouth's Interconnection Services website, http://interconnection.bellsouth.com/guides/html/unes.html, for migrations to a 3rd party switching vendor/CLEC. This Agreement does not supercede or otherwise nullify or modify other restrictions, obligations or requirements set forth in any separate agreement(s) governing MCI's relationship with BellSouth for use of BellSouth's loop/port combinations purchased pursuant to such separate agreements(s).

2.1.12.1.1 Should MCI request migration for two (2) or more EATNs containing fifteen (15) or more circuits in the same central office and on the same due date, MCI must use the Bulk Migration process referenced in Section 2.1.12.1 above.

2.1.12.2 Nothing herein shall prevent MCI from seeking improvements in the Bulk Migration process before any Commission or in any other appropriate forum.

2.1.13 Ordering Guidelines and Processes.

2.1.13.1 Information regarding Ordering Guidelines and Processes for various UNEs is contained in the "Guides" section of the BellSouth Interconnection website, which is incorporated herein by reference, as amended from time to time. BellSouth will notify MCI of changes to ordering, preordering, provisioning, maintenance and repair, and billing interfaces (via the CCP) and to business rules via the appropriate BellSouth web site (via Carrier Notification) thirty (30) days prior to such changes. The website address is: http://www.interconnection.bellsouth.com/. In addition, BellSouth will use its best efforts, upon MCI's request to BellSouth's Interconnection Services (ICS) website group at wmag@bellsouth.com, to provide via e-mail to the address specified by MCI a list of the Carrier Notifications generated the previous business day.

2.2 **Unbundled Voice Loops (UVLs)**

2.2.1 BellSouth shall make available the following UVLs:

2.2.1.1 2-wire Analog Voice Grade Loop – SL1 (Non-Designed)

2.2.1.2 2-wire Analog Voice Grade Loop – SL2 (Designed)

2.2.1.3 4-wire Analog Voice Grade Loop (Designed)

2.2.2 Unbundled Voice Loops (UVL) may be provisioned using any type of facility that will support voice grade services. This may include loaded copper, non-loaded copper, digital Loop carrier systems, fiber/copper combination (hybrid Loop) or a combination of any of these facilities. BellSouth in the normal course of maintaining, repairing, and configuring its network, may also change the facilities that are used to provide any given voice grade circuit. This change may occur at any time. In these situations, BellSouth will only ensure that the newly provided facility will support voice grade services. BellSouth will not guarantee that MCI will be able to continue to provide any advanced services over the new facility. BellSouth will offer UVL in two different service levels - Service Level One (SL1) and Service Level Two (SL2).

2.2.3 Unbundled Voice Loop - SL1 (UVL-SL1) Loops are 2-wire circuits, will be non-designed, and will not have remote access test points. UVL-SL1 Loops will be provisioned capable of using

Loop start signaling, however, MCI is not required to use the Loop start capabilities of the UVL-SL1 to provide Telecommunications Services. OC will be offered as a chargeable option on SL1 Loops when reuse of existing facilities has been requested by MCI. MCI may also order OC-TS when a specified conversion time is requested. OC-TS is a chargeable option for any coordinated order and is billed in addition to the OC charge. An Engineering Information (EI) document can be ordered as a chargeable option. The EI document provides Loop Make-Up (LMU) information that is similar to the information normally provided in a Design Layout Record (DLR). Upon issuance of a non-coordinated order in the service order system, SL1 Loops will be activated on the due date in the same manner and time frames that BellSouth normally activates POTS-type Loops for its customers.

2.2.4 For an additional charge BellSouth will make available Loop Testing so that MCI may request further testing on new UVL-SL1 Loops. Rates for Loop Testing are as set forth in Exhibit A of this Attachment.

2.2.5 Unbundled Voice Loop – SL2 (UVL-SL2) Loops may be 2-wire or 4-wire circuits, shall have remote access test points, and will be designed with a DLR provided to MCI. BellSouth shall provide SL2 Loops that are provisioned capable of using Loop start, ground start or reverse battery signaling, however, MCI is not required to use any particular signaling option in the Telecommunication Services it provisions on ULV-SL2 Loops. OC is provided as a standard feature on SL2 Loops.

2.3 **Unbundled Digital Loops**

2.3.1 BellSouth will offer Unbundled Digital Loops (UDL). UDLs are service specific, will be designed, will be provisioned with test points (where technically feasible), and will come standard with OC and a DLR. The various UDLs are intended to support a specific digital transmission scheme or service.

2.3.2 BellSouth shall make available the following UDLs, subject to restrictions set forth herein:

2.3.2.1 2-wire Unbundled ISDN Digital Loop

2.3.2.2 2-wire Unbundled ADSL Compatible Loop

2.3.2.3 2-wire Unbundled HDSL Compatible Loop

2.3.2.4 4-wire Unbundled HDSL Compatible Loop

2.3.2.5 4-wire Unbundled DS1 Digital Loop

2.3.2.6 4-wire Unbundled Digital Loop/DS0 – 64 kbps, 56 kbps and below

2.3.2.7 DS3 Loop

2.3.2.8 STS-1 Loop

2.3.3 2-Wire Unbundled ISDN Digital Loops will be provisioned according to industry standards for 2-Wire Basic Rate ISDN services and will come standard with a test point, OC, and a DLR. MCI will be responsible for providing BellSouth with a Service Profile Identifier (SPID) associated with a particular ISDN-capable Loop and customer. With the SPID, BellSouth will be able to adequately test the circuit and ensure that it properly supports ISDN service.

2.3.3.1 Upon the Effective Date of this Agreement, Universal Digital Channel (UDC) elements will no longer be offered by BellSouth and no new orders for UDC will be accepted. Any existing UDCs that were provisioned prior to the Effective Date of this Agreement will be grandfathered at the rates set forth in the Parties' interconnection agreement that was in effect immediately prior to the Effective Date of this Agreement. Existing UDCs that were provisioned prior to the Effective Date of this Agreement may remain connected, maintained and repaired until such time as they are disconnected by MCI or BellSouth provides ninety (90) calendar days notice that such UDC must be terminated. If BellSouth provides such notice and requires the UDC circuits to be disconnected or converted to ISDN circuits, any applicable disconnect or conversion charges would be waived.

2.3.4 2-Wire ADSL-Compatible Loop. This is a designed Loop that is provisioned according to Revised Resistance Design (RRD) criteria and may be up to 18,000 feet long and may have up to 6,000 feet of bridged tap (inclusive of Loop length). The Loop is a 2-wire circuit and will come standard with a test point, OC, and a DLR.

2.3.5 2-Wire or 4-Wire HDSL-Compatible Loop. This is a designed Loop that meets Carrier Serving Area (CSA) specifications, may be up to 12,000 feet long and may have up to 2,500 feet of bridged tap (inclusive of Loop length). It will come standard with a test point, OC, and a DLR.

2.3.6 4-Wire Unbundled DS1 Digital Loop.

2.3.6.1 This is a designed 4-wire Loop that is provisioned according to industry standards for DS1 or Primary Rate ISDN services and will come standard with a test point, OC, and a DLR. A DS1 Loop may be provisioned over a variety of Loop transmission technologies including copper, HDSL-based technology or fiber optic transport systems. It will include a 4-Wire DS1 Network Interface at the customer's location. For purposes of this Agreement, including the transition of DS1 and DS3 Loops described in Section 2.1.7 above, DS1 Loops include 2-wire and 4-wire copper Loops capable of providing high-bit rate digital subscriber line services, such as 2-wire and 4-wire HDSL Compatible Loops.

2.3.6.2 Except in offices as outlined in Section 2.1.7 above, BellSouth shall provide, upon MCI's request, up to ten (10) unbundled DS1 Loops to MCI at any single building in which DS1 Loops are available as unbundled Loops.

2.3.7 4-Wire Unbundled Digital/DS0 Loop. These are designed 4-wire Loops that may be configured as 64kbps, 56kbps, 19kbps, and other sub-rate speeds associated with digital data services and will come standard with a test point, OC, and a DLR.

2.3.8 DS3 Loop. DS3 Loop is a two-point digital transmission path which provides for simultaneous two-way transmission of serial, bipolar, return-to-zero isochronous digital electrical signals at a transmission rate of 44.736 megabits per second (Mbps) that is dedicated to the use of the ordering CLEC in its provisioning of local exchange and exchange access services. It may provide transport for twenty-eight (28) DS1 channels, each of which provides the digital equivalent of twenty-four (24) analog voice grade channels. The interface to unbundled dedicated DS3 transport is a metallic-based electrical interface.

2.3.9 DS3 services come with a test point and a DLR. Mileage is airline miles, rounded up and a minimum of one (1) mile applies. BellSouth's TR73501 LightGate® Service Interface and Performance Specifications, Issue D, June 1995 applies to DS3 services.

2.3.10 Except for Loops in certain offices as specified in Section 2.1.7 above, MCI may obtain a maximum of a single Unbundled DS3 Loop to any single building in which DS3 Loops are available as Unbundled Loops.

2.3.11 STS-1 Loop. STS-1 Loop is a high-capacity digital transmission path with SONET VT1.5 mapping that is dedicated for the use of the ordering customer for the purpose of provisioning local exchange and exchange access services. It is a two-point digital transmission path which provides for simultaneous two-way transmission of serial bipolar return-to-zero synchronous digital electrical signals at a transmission rate of 51.84 megabits per second (Mbps). It may provide transport for twenty-eight (28) DS1 channels, each of which provides the digital equivalent of twenty-four (24) analog voice grade channels. The interface to unbundled dedicated STS-1 transport is a metallic-based electrical interface.

2.4 **Unbundled Copper Loops (UCL)**

2.4.1 BellSouth shall make available Unbundled Copper Loops (UCLs). The UCL is a copper twisted pair Loop that is unencumbered by any intervening equipment (e.g., filters, load coils, range extenders, digital Loop carrier, or repeaters) and is not intended to support any particular telecommunications service. The UCL will be offered in two types – Designed and Non-Designed.

2.4.2 Unbundled Copper Loop – Designed (UCL-D).

2.4.2.1 The UCL-D will be provisioned as a dry copper twisted pair (2- or 4-wire) Loop that is unencumbered by any intervening equipment (e.g., filters, load coils, range extenders, digital Loop carrier, or repeaters).

2.4.2.2 A UCL-D will be 18,000 feet or less in length and is provisioned according to Resistance Design parameters, may have up to 6,000 feet of bridged tap and will have up to 1300 Ohms of resistance.

2.4.2.3 The UCL-D is a designed circuit, is provisioned with a test point, and comes standard with a DLR. OC comes standard as a chargeable item for UCL-D and is required where a reuse of existing facilities has been requested by MCI. OC will not be billed in those instances where the reuse of existing facilities has not been requested by MCI.

2.4.2.4 These Loops are not intended to support any particular services and may be utilized by MCI to provide a wide-range of telecommunications services as long as those services do not adversely affect BellSouth's network. This facility will include a NID at the customer's location for the purpose of connecting the Loop to the customer's inside wire.

2.4.2.5 Upon the Effective Date of this Agreement, Unbundled Copper Loop – Long (UCL-L) elements will no longer be offered by BellSouth and no new orders for UCL-L will be accepted. Any existing UCL-Ls that were provisioned prior to the Effective Date of this Agreement will be grandfathered at the rates set forth in the Parties' interconnection agreement that was in effect immediately prior to the Effective Date of this Agreement. Existing UCL-Ls that were provisioned prior to the Effective Date of this Agreement may remain connected, maintained and repaired according to BellSouth's TR73600 and may remain connected until such time as they are disconnected by MCI or BellSouth provides ninety (90) calendar days notice that such UCL-L must be terminated.

2.4.3 Unbundled Copper Loop – Non-Designed (UCL-ND).

2.4.3.1 The UCL–ND is provisioned as a dedicated 2-wire metallic transmission facility from BellSouth's Main Distribution Frame (MDF) to a customer's premises (including the NID). The

UCL-ND will be a "dry copper" facility in that it will not have any intervening equipment such as load coils, repeaters, or digital access main lines (DAMLs), and may have up to 6,000 feet of bridged tap between the customer's premises and the serving wire center. The UCL-ND typically will be 1300 Ohms resistance and in most cases will not exceed 18,000 feet in length, although the UCL-ND will not have a specific length limitation. For Loops less than 18,000 feet and with less than 1300 Ohms resistance, the Loop will provide a voice grade transmission channel suitable for Loop start signaling and the transport of analog voice grade signals. The UCL-ND will not be designed and will not be provisioned with either a DLR or a test point.

2.4.3.2 The UCL-ND facilities may be mechanically assigned using BellSouth's assignment systems. Therefore, the LMU process is not required to order and provision the UCL-ND. However, MCI can request LMU for which additional charges would apply.

2.4.3.3 For an additional charge, BellSouth also will make available Loop Testing so that MCI may request further testing on the UCL-ND. Rates for Loop Testing are as set forth in Exhibit A of this Attachment.

2.4.3.4 UCL-ND Loops are not intended to support any particular service and may be utilized by MCI to provide a wide-range of telecommunications services as long as those services do not adversely affect BellSouth's network. The UCL-ND will include a NID for the purpose of connecting the Loop to the inside wire.

2.4.3.5 OC comes standard as a chargeable item for UCL-ND and is required where a reuse of existing facilities has been requested by MCI. OC will not be billed in those instances where the reuse of existing facilities has not been requested by MCI. OC-TS does not apply to this product.

2.4.3.6 MCI may use BellSouth's Unbundled Loop Modification (ULM) offering to remove excessive bridged taps and/or load coils from any copper Loop within the BellSouth network. Therefore, some Loops that would not qualify as UCL-ND could be transformed into Loops that do qualify, using the ULM process.

2.5 **Unbundled Loop Modifications (Line Conditioning)**

2.5.1 Line Conditioning is defined as a routine network modification that BellSouth regularly undertakes to provide xDSL services to its own customers. This may include the removal of any device, from a copper Loop or copper subloop that may diminish the capability of the Loop or subloop to deliver high-speed switched wireline telecommunications capability, including xDSL service. Such devices include, but are not limited to, load coils, excessive bridged taps, low pass filters, and range extenders. Excessive bridged taps are bridged taps that serve no network design purpose and that are beyond the limits set according to industry standards. In the absence of an industry standard for a BellSouth Loop type, the Loop will be provided on a nondiscriminatory basis.

2.5.2 BellSouth will remove load coils only on copper Loops and subloops as requested by MCI that are less than 18,000 feet in length at the rate set forth in Exhibit A. BellSouth will remove load coils on copper Loops and subloops that are greater than 18,000 feet in length on a special construction basis.

2.5.3 Any copper Loop being ordered by MCI which has over 6,000 feet of combined bridged tap will be modified, upon request from MCI, so that the Loop will have a maximum of 6,000 feet of bridged tap. This modification will be performed at no additional charge to MCI. Loop conditioning orders that require the removal of bridged tap on a copper Loop that will result in a

combined total of bridged tap between 2,500 and 6,000 feet will be performed at the rates set forth in Exhibit A of this Attachment.

2.5.4 MCI may request removal of any unnecessary and non-excessive bridged tap (bridged tap between 0 and 2,500 feet which serves no network design purpose), at rates pursuant to BellSouth's Special Construction Process as mutually agreed to by the Parties.

2.5.5 Rates for ULM are as set forth in Exhibit A of this Attachment.

2.5.6 BellSouth will not modify a Loop in such a way that it no longer meets the technical parameters of the original Loop type (e.g., voice grade, ADSL, etc.) being ordered. However, should BellSouth refuse MCI's request to condition a Loop, BellSouth will comply with the appropriate requirements of 47 CFR 51.319 (a)(1)(iii).

2.5.7 If MCI requests ULM on a reserved facility for a new Loop order, BellSouth may perform a pair change and provision a different Loop facility in lieu of the reserved facility with ULM if feasible. The Loop provisioned will meet or exceed specifications of the requested Loop facility as modified. MCI will not be charged for ULM if a different Loop is provisioned. For Loops that require a DLR or its equivalent, BellSouth will provide LMU detail of the Loop provisioned.

2.5.8 MCI shall request Loop make up information pursuant to this Attachment prior to submitting a service inquiry and/or a LSR for the Loop type that MCI desires BellSouth to condition.

2.5.9 When requesting ULM for a Loop that BellSouth has previously provisioned for MCI, MCI will submit a service inquiry to BellSouth. If a spare Loop facility that meets the Loop modification specifications requested by MCI is available at the location for which the ULM was requested, MCI will have the option to change the Loop facility to the qualifying spare facility rather than to provide ULM. In the event that BellSouth changes the Loop facility in lieu of providing ULM, MCI will not be charged for ULM but will only be charged the service order charges for submitting an order.

2.6 **Loop Provisioning Involving Integrated Digital Loop Carriers**

Where MCI has requested an Unbundled Loop and BellSouth uses IDLC systems to provide the local service to the customer and BellSouth has a suitable alternate facility available, BellSouth will make such alternative facilities available to MCI. If a suitable alternative facility is not available, then to the extent it is technically feasible, BellSouth will implement one of the following alternative arrangements for MCI (e.g. hairpinning):

1 Roll the circuit(s) from the IDLC to any spare copper that exists to the customer premises.
2 Roll the circuit(s) from the IDLC to an existing DLC that is not integrated.
3 Remove the Loop distribution pair from the IDLC and re-terminate the pair to a spare copper Loop feeder pair or spare UDC equipment in the Loop feeder route or Carrier Serving Area (CSA).
4 If capacity exists, provide "Digital Access Cross-connect System (DACS)-door" porting (if the IDLC routes through a DACS prior to integration into the switch).
5 If capacity exists, provide "side-door" porting through the switch.
6 If IDLC system is not served by a switch capable of side-door functionality, BellSouth will move the IDLC system to switch equipment that is side-door capable.
7 Install and activate new DLC facilities and then move the IDLC to the new facilities.
8 Convert IDLC to UDC.

2.6.1 Arrangements 4, 5 and 6 above require the use of a designed circuit. Therefore, these arrangements are not available for non-designed Loops such as the SL1 voice grade and UCL-ND.

2.6.2 If, however, BellSouth concludes that only Alternatives 7 or 8 can give the CLEC a Loop meeting the specifications it ordered and because the application of these Alternatives may require the requesting CLEC to pay special construction charges, BellSouth would proceed with implementation only if the CLEC agrees. MCI will then have the option of paying the one-time SC rates to place the Loop. BellSouth shall not impose SC charges on MCI in circumstances where BellSouth would not impose such charges on its own retail customer to provide the Loop necessary to offer the services requested by the retail customer.

2.7 **Network Interface Device**

2.7.1 The NID is defined as any means of interconnection of the customer's premises wiring to BellSouth's distribution plant, such as a cross-connect device used for that purpose. The NID is a single-line termination device or that portion of a multiple line termination device required to terminate a single line or circuit at the premises. The NID features two (2) independent chambers or divisions that separate the service provider's network from the customer's premises wiring. Each chamber or division contains the appropriate connection points or posts to which the service provider and the customer each make their connections. The NID provides a protective ground connection and is capable of terminating cables such as twisted pair cable.

2.7.2 BellSouth shall permit MCI to connect MCI's Loop facilities to the inside wiring through the BellSouth NID or at any other technically feasible point.

2.7.3 Access to NID.

2.7.3.1 MCI may access the premises wiring (wiring that is beyond the BellSouth point of demarcation and is not owned or controlled by BellSouth) by any of the following means and MCI shall not disturb the existing form of electrical protection and shall maintain the physical integrity of the NID:

2.7.3.1.1 BellSouth shall allow MCI to connect its Loops directly to BellSouth's multi-line NID enclosures that have additional space and are not used by BellSouth or any other telecommunications carriers to provide service to the premises. If sufficient NID terminations are not available, BellSouth shall install a NID at MCI's request.

2.7.3.1.2 Where an adequate length of the premises wiring is present and environmental conditions permit, either Party may remove the premises wiring from the other Party's NID and connect such wiring to that Party's own NID, provided that the Party moving the premise wiring has been authorized by the ordering party to provide service using such wiring;

2.7.3.1.3 Either Party may enter the subscriber access chamber or dual chamber NID enclosures for the purpose of extending a cross-connect or spliced jumper wire from the premises wiring through a suitable "punch-out" hole of such NID enclosures; or

2.7.3.1.4 MCI may request BellSouth to make other rearrangements to the premises wiring terminations or terminal enclosure on a time and materials cost basis; or

2.7.3.1.5 Because BellSouth has no proprietary interest in the premises wiring, MCI may access the premises wiring in any other manner acceptable to the ordering party, so long as such access is made completely on the ordering party's interface side of the NID and beyond BellSouth's point of demarcation.

2.7.3.2 In no case shall either Party remove or disconnect the other Party's Loop facilities from either Party's NIDs, enclosures, or protectors unless the applicable Commission has expressly permitted the same and the disconnecting Party provides prior notice to the other Party. In such cases, it shall be the responsibility of the Party disconnecting Loop facilities to leave undisturbed the existing form of electrical protection and to maintain the physical integrity of the NID. It will be the removing Party's responsibility to ensure there is no safety hazard, and the removing Party shall hold the other Party harmless for any liability associated with the removal of the other Party's Loop from the NID. Furthermore, it shall be the responsibility of the removing Party, once the other Party's Loop has been disconnected from the NID, to reconnect the disconnected Loop to a nationally recognized testing laboratory listed station protector, which has been grounded as per Article 800 of the National Electrical Code. If no spare station protector exists in the NID, the disconnected Loop must be appropriately cleared, capped and stored.

2.7.3.3 MCI shall not remove or disconnect ground wires from BellSouth's NIDs, enclosures, or protectors.

2.7.3.4 MCI shall not remove or disconnect NID modules, protectors, or terminals from BellSouth's NID enclosures.

2.7.3.5 Due to the wide variety of NID enclosures and outside plant environments, BellSouth will work with MCI to develop specific procedures to establish the most effective means of implementing this Section if the procedures set forth herein do not apply to the NID in question.

2.7.4 Technical Requirements.

2.7.4.1 The NID shall provide an accessible point of interconnection and shall maintain a connection to ground.

2.7.4.2 If an existing NID is accessed, it shall be capable of transferring electrical analog or digital signals between the customer's premises and the distribution media and/or cross-connect to MCI's NID.

2.7.4.3 Existing BellSouth NIDs will be provided in working condition. Where such NID is not functioning properly, and to the extent that it is technically feasible, BellSouth shall repair or replace the NID at BellSouth's expense. When MCI deploys its own local Loops in a multiple-line termination device, MCI shall specify the quantity of NID connections that it requires within such device.

2.8 **Subloop Elements**

2.8.1 Where facilities permit, BellSouth shall offer access to its Unbundled Sublooop (USL) elements as specified herein.

2.8.2 Unbundled Subloop Distribution.

2.8.2.1 The Unbundled Subloop Distribution facility is a dedicated transmission facility that BellSouth provides from a customer's point of demarcation to a BellSouth cross-connect device. The BellSouth cross-connect device may be located within a remote terminal (RT) or a stand-alone cross-box in the field or in the equipment room of a building. The unbundled subloop distribution media is a copper twisted pair that can be provisioned as a 2-Wire or 4-Wire facility. BellSouth will make available the following subloop distribution offerings where facilities exist:

- Unbundled Subloop Distribution – Voice Grade

- Unbundled Copper Subloop
- Unbundled Subloop Distribution – Intrabuilding Network Cable (aka riser cable)

2.8.2.2 Unbundled Subloop Distribution – Voice Grade (USLD-VG) is a copper subloop facility from the cross-box in the field up to and including the point of demarcation at the customer's premises and may have load coils.

2.8.2.3 Unbundled Copper Subloop (UCSL) is a copper facility of any length provided from the cross-box in the field up to and including the customer's point of demarcation. If available, this facility will not have any intervening equipment such as load coils between the customer and the cross-box.

2.8.2.3.1 If MCI requests a UCSL and it is not available, MCI may request the copper Subloop facility be modified pursuant to the ULM process to remove load coils and/or excessive bridged taps. If load coils and/or excessive bridged taps are removed, the facility will be classified as a UCSL.

2.8.2.4 Unbundled Subloop Distribution – Intrabuilding Network Cable (USLD-INC) is the distribution facility owned or controlled by BellSouth inside a building or between buildings on the same property that is not separated by a public street or road. USLD-INC includes the facility from the cross-connect device in the building equipment room up to and including the point of demarcation at the customer's premises.

2.8.2.4.1 Upon request for USLD-INC from MCI, BellSouth will install a cross-connect panel in the building equipment room for the purpose of accessing USLD-INC pairs from a building equipment room. The cross-connect panel will function as a single point of interconnection (SPOI) for USLD-INC and will be accessible by multiple carriers as space permits. BellSouth will place cross-connect blocks in 25-pair increments for MCI's use on this cross-connect panel. MCI will be responsible for connecting its facilities to the 25-pair cross-connect block(s).

2.8.2.5 For access to Voice Grade USLD and UCSL, MCI shall install a cable to the BellSouth cross-box pursuant to the terms and conditions for physical collocation for remote sites set forth in this Agreement. This cable would be connected by a BellSouth technician within the BellSouth cross-box during the set-up process. MCI's cable pairs can then be connected to BellSouth's USL within the BellSouth cross-box by the BellSouth technician.

2.8.2.6 Through the SI process, BellSouth will determine whether access to Unbundled Subloops at the location requested by MCI is technically feasible and whether sufficient capacity exists in the cross-box. If existing capacity is sufficient to meet MCI's request, then BellSouth will perform the site set-up as described in the Unbundled Subloop (USL) (Distribution Facility) CLEC information package, located at the website address: http://interconnection.bellsouth.com/guides/unedocs/unb_sl_usl_dist.pdf.

2.8.2.7 The site set-up must be completed before MCI can order subloop pairs. For the site set-up in a BellSouth cross-connect box in the field, BellSouth will perform the necessary work to splice MCI's cable into the cross-connect box. For the site set-up inside a building equipment room, BellSouth will perform the necessary work to install the cross-connect panel and the connecting block(s) that will be used to provide access to the requested USLs.

2.8.2.8 Once the site set-up is complete, MCI will request subloop pairs through submission of a LSR form to the Local Carrier Service Center (LCSC). OC is required with USL pair provisioning when MCI requests reuse of an existing facility, and the OC charge shall be billed in addition to

the USL pair rate. For expedite requests by MCI for subloop pairs, expedite charges will apply for intervals less than five (5) calendar days.

2.8.3 Unbundled Network Terminating Wire (UNTW).

2.8.3.1 UNTW is unshielded twisted copper wiring that is used to extend circuits from an intra-building network cable terminal or from a building entrance terminal to an individual customer's point of demarcation. It is the final portion of the Loop that in multi-subscriber configurations represents the point at which the network branches out to serve individual subscribers.

2.8.3.2 This element will be provided in Multi-Dwelling Units (MDUs) and/or Multi-Tenants Units (MTUs) where BellSouth owns, controls or leases, but only to the extent BellSouth has control by virtue of such lease, wiring all the way to the customer's premises. BellSouth shall not provide this element in locations where the property owner provides its own wiring to the customer's premises or where a third party owns the wiring to the customer's premises.

2.8.3.3 Requirements

2.8.3.3.1 On a multi-unit premises, upon request of the other Party (Requesting Party), the Party owning the network terminating wire (Provisioning Party) will provide access to NTW pairs on an Access Terminal that is suitable for use by multiple carriers at each Garden Terminal or Wiring Closet.

2.8.3.3.2 The Provisioning Party shall not be required to install new or additional NTW beyond existing NTW to provision the services of the Requesting Party.

2.8.3.3.3 In existing MDUs and/or MTUs in which MCI does own or control wiring (NTW) to the customer's premises, MCI will install NTW Access Terminals for BellSouth at no additional charge.

2.8.3.3.3.1 In situations in which BellSouth activates a NTW pair, BellSouth will compensate MCI for each pair activated commensurate to the price specified in this Agreement.

2.8.3.3.4 Upon receipt of the NTW SI requesting access to the Provisioning Party's NTW pairs at a multi-unit premises, representatives of both Parties will participate in a meeting at the site of the requested access. The purpose of the site visit will include discussion of the procedures for installation and location of the Access Terminals. By request of the Requesting Party, an Access Terminal will be installed either adjacent to each of the Provisioning Party's Garden Terminal or inside each Wiring Closet. The Requesting Party will deliver and connect its facilities to the NTW pairs within the Access Terminal. The Requesting Party may access any available pair on an Access Terminal. A pair is available when a pair is not being utilized to provide service or where the customer has requested a change in its local service provider to the Requesting Party. Prior to connecting the Requesting Party's service on a pair previously used by the Provisioning Party, the Requesting Party is responsible for ensuring the customer is no longer using the Provisioning Party's service or another CLEC's service before accessing NTW pairs.

2.8.3.3.5 Access Terminal installation intervals will be established on an individual case basis.

2.8.3.3.6 The Requesting Party is responsible for obtaining the property owner's permission for the Provisioning Party to install an Access Terminal(s) on behalf of the Requesting Party. The submission of the SI by the Requesting Party will serve as certification by the Requesting Party that such permission has been obtained. If the property owner objects to Access Terminal installations that are in progress or subsequent to completion and demands removal of Access

Terminals, the Requesting Party will be responsible for costs associated with removing Access Terminals and restoring the property to its original state prior to Access Terminals being installed.

2.8.3.3.7 The Requesting Party shall indemnify and hold harmless the Provisioning Party against any claims of any kind that may arise out of the Requesting Party's failure to obtain the property owner's permission. The Requesting Party will be billed for NRCs and MRCs for accessing NTW pairs at the time the Requesting Party activates the pair(s). The Requesting Party will notify the Provisioning Party within five (5) business days of activating NTW pairs using the LSR form.

2.8.3.3.8 If a trouble exists on a NTW pair, the Requesting Party may use an alternate spare pair that serves that customer if a spare pair is available. In such cases, the Requesting Party will re-terminate its existing jumper from the defective pair to the spare pair. Alternatively, the Requesting Party will isolate and report troubles in the manner specified by the Provisioning Party. The Requesting Party must tag the NTW pair that requires repair. If the Provisioning Party dispatches a technician on a reported trouble call and no NTW trouble is found, the Provisioning Party will charge the Requesting Party for time spent on the dispatch and testing the NTW pair(s).

2.8.3.3.9 If the Requesting Party initiates the Access Terminal installation and the Requesting Party has not activated at least ten (10) percent of the capacity of the Access Terminal installed pursuant to the Requesting Party's request for an Access Terminal within six (6) months of installation of the Access Terminal, the Provisioning Party will bill the Requesting Party a NRC equal to the actual cost of the installation of the Access Terminal, not including the physical equipment.

2.8.3.3.10 If the Provisioning Party determines that the Requesting Party is using the NTW pairs without reporting the activation of the pairs, the Requesting Party will be billed for the use of that pair back to the date the customer began receiving service from the Requesting Party at that location. Upon request, the Requesting Party will provide copies of its billing record to substantiate such date. If the Requesting Party fails to provide such records, then the Provisioning Party will bill the Requesting Party back to the date of the Access Terminal installation.

2.8.4 Unbundled Loop Concentration.

2.8.4.1 Upon the Effective Date of this Agreement, the Unbundled Loop Concentration (ULC) element will no longer be offered by BellSouth and no new orders for ULC will be accepted. Any existing ULCs that were provisioned prior to the Effective Date of this Agreement will be grandfathered at the rates set forth in the Parties' interconnection agreement that was in effect immediately prior to this Agreement and may remain until such time as they are disconnected by MCI, or BellSouth provides ninety (90) calendar days notice that such ULC must be terminated.

2.8.5 Dark Fiber Loop.

2.8.5.1 Dark Fiber Loop is an unused optical transmission facility, without attached signal regeneration, multiplexing, aggregation or other electronics, from the demarcation point at a customer's premises to the customer's serving wire center. Dark Fiber Loops may be strands of optical fiber existing in aerial or underground structure. BellSouth will not provide line terminating elements, regeneration or other electronics necessary for MCI to utilize Dark Fiber Loops.

2.8.5.2 Transition for Dark Fiber Loop

2.8.5.2.1 For purposes of this Section 2.8.5, the Transition Period for Dark Fiber Loops is the eighteen (18) month period beginning March 11, 2005 and ending September 10, 2006

2.8.5.2.2 For purposes of this Section 2.8.5, Embedded Base means Dark Fiber Loops that were in service for MCI as of March 10, 2005. Subsequent disconnects or loss of customer shall be removed from the Embedded Base.

2.8.5.3 During the Transition Period only, BellSouth shall make available for the Embedded Base Dark Fiber Loops for MCI at the terms and conditions set forth in this Attachment.

2.8.5.4 Notwithstanding the Effective Date of this Agreement, the rates for MCI's Embedded Base of Dark Fiber Loops during the Transition Period shall be as set forth in Exhibit A.

2.8.5.5 The Transition Period shall apply only to MCI's Embedded Base and MCI shall not add new Dark Fiber Loops pursuant to this Agreement.

2.8.5.6 Effective September 11, 2006, Dark Fiber Loops will no longer be made available pursuant to this Agreement.

2.8.5.7 No later than June 10, 2006 MCI shall submit spreadsheet(s) identifying all of the Embedded Base of circuits to be either disconnected or converted to other BellSouth services as Conversions pursuant to Section 1.6. The Parties shall negotiate a project schedule for the Conversion of the Embedded Base.

2.8.5.7.1 If MCI fails to submit the spreadsheet(s) specified in Section 2.8.5.7 above for all of its Embedded Base prior to June 10, 2006, BellSouth will identify MCI's remaining Embedded Base, if any, and will transition such circuits to the equivalent tariffed BellSouth service(s). Those circuits identified and transitioned by BellSouth pursuant to this Section 2.8.5.7.1 shall be subject to all applicable disconnect charges as set forth in this Agreement and the full nonrecurring charges for installation of the equivalent tariffed BellSouth service as set forth in BellSouth's tariffs.

2.8.5.8 For Embedded Base circuits converted pursuant to Section 2.8.5.7 or transitioned pursuant to 2.8.5.7.1, the applicable recurring tariff charge shall apply to each circuit as of the earlier of the date each circuit is converted or transitioned, as applicable, or September 11, 2006.

2.9 **Loop Makeup**

2.9.1 Description of Service-LMU.

2.9.1.1 BellSouth shall make available to MCI LMU information so that MCI can make an independent judgment about whether the Loop is capable of supporting the advanced services equipment MCI intends to install and the services MCI wishes to provide. This Section addresses LMU as a preordering transaction, distinct from MCI ordering any other service(s). Loop Makeup Service Inquiries (LMUSI) and mechanized LMU queries for preordering LMU are likewise unique from other preordering functions with associated SIs as described in this Agreement.

2.9.1.2 BellSouth will provide MCI LMU information consisting of the composition of the Loop material (copper/fiber); the existence, location and type of equipment on the Loop, including but not limited to digital Loop carrier or other remote concentration devices, feeder/distribution interfaces, bridged taps, load coils, pair-gain devices; the Loop length; the wire gauge and electrical parameters.

2.9.1.3 BellSouth's LMU information is provided to MCI as it exists either in BellSouth's databases or in its hard copy facility records. BellSouth does not guarantee accuracy or reliability of the LMU information provided, but BellSouth shall provide the same information to MCI that is provides to itself.

2.9.1.4 BellSouth's provisioning of LMU information to the requesting CLEC for facilities is contingent upon either BellSouth or the requesting CLEC controlling the Loop(s) that serve the service location for which LMU information has been requested by the CLEC. The requesting CLEC is not authorized to receive LMU information on a facility used or controlled by another CLEC unless BellSouth receives a Letter of Authorization (LOA) from the voice CLEC (owner) or its authorized agent on the LMUSI submitted by the requesting CLEC.

2.9.1.5 MCI may choose to use equipment that it deems will enable it to provide a certain type and level of service over a particular BellSouth Loop as long as that equipment does not disrupt other services on the BellSouth network. The determination shall be made solely by MCI and BellSouth shall not be liable in any way for the performance of the advanced data services provisioned over said Loop. For facilities reserved using a mechanized LMU or LMUSI, the specific Loop type (ADSL, HDSL, or otherwise) ordered on the LSR must match the LMU of the Loop reserved taking into consideration any requisite line conditioning. The LMU data is provided for informational purposes only and does not guarantee MCI's ability to provide advanced data services over the ordered Loop type. Further, if MCI orders Loops that do not require a specific facility medium (i.e. copper only) or Loops that are not intended to support advanced services (such as UV-SL1, UV-SL2, or ISDN compatible Loops) and that are not inventoried as copper-only Loops, the LMU information for such Loops, other than copper only Loops (e.g., ADSL, UCL-ND, etc.) that support advanced services, is subject to change at any time due to modifications and/or upgrades to BellSouth's network. MCI is fully responsible for any of its service configurations that may differ from BellSouth's technical standard for the Loop type ordered.

2.9.1.6 If BellSouth retires its copper facilities using 47 C.F.R § 52.325(a) requirements; or is required by a governmental agency or regulatory body to move or replace copper facilities as a maintenance procedure, BellSouth will notify MCI, according to the applicable network disclosure requirements. It will be MCI's responsibility to move any service it may provide over such facilities to alternative facilities. If MCI fails to move the service to alternative facilities by the date in the network disclosure notice, BellSouth may terminate the service to complete the network change.

2.9.2 Submitting Mechanized LMUs.

2.9.2.1 MCI may obtain LMU information by submitting a mechanized LMU. Mechanized LMU should be submitted through BellSouth's OSS interfaces. After obtaining the Loop information from the mechanized LMU process, if MCI needs further Loop information in order to determine Loop service capability, MCI may initiate a separate Manual LMUSI for a separate NRC as set forth in Exhibit A of this Attachment.

2.9.2.2 Manual LMUSIs shall be submitted either by electronic mail to BellSouth's Complex Resale Support Group (CRSG)/Account Team utilizing the Preordering Loop Makeup Service Inquiry form or via the Interconnection CLEC Enabler (ICE) web interface according to the guidelines in the LMU CLEC Information Package, incorporated herein by reference, as it may be amended from time to time, which can be found at the following BellSouth website: http://interconnection.bellsouth.com/guides/html/unes.html. The service interval for the return of a Manual LMUSI is three (3) business days. Manual LMUSIs are not subject to expedite requests. This service interval is distinct from the interval applied to the subsequent service order.

2.9.3 Loop Reservations.

2.9.3.1 For a Mechanized LMUSI, MCI may reserve up to ten (10) Loop facilities. For a Manual LMUSI, MCI may reserve up to three (3) Loop facilities.

2.9.3.2 MCI may reserve facilities for up to four (4) business days for each facility requested through a mechanized LMU or LMUSI from the time the LMU information is returned to MCI. During and prior to MCI placing an LSR, the reserved facilities are rendered unavailable to other customers, including BellSouth. If MCI does not submit an LSR for a UNE service on a reserved facility within the four (4)-day reservation timeframe, the reservation of that spare facility will become invalid and the facility will be released.

2.9.3.3 Charges for preordering Manual LMUSI or Mechanized LMU are separate from any charges associated with ordering other services from BellSouth.

2.9.3.4 All LSRs issued for reserved facilities shall reference the facility reservation number as provided by BellSouth. MCI will not be billed any additional LMU charges for the Loop ordered on such LSR. If, however, MCI does not reserve facilities upon an initial LMUSI, MCI's placement of an order for an advanced data service type facility will incur the appropriate billing charges to include SI and reservation per Exhibit A of this Attachment.

2.9.3.5 Where MCI has reserved multiple Loop facilities on a single reservation, MCI may not specify which facility shall be provisioned when submitting the LSR. For those occasions, BellSouth will assign to MCI, subject to availability, a facility that meets the BellSouth technical standards of the BellSouth type Loop as ordered by MCI.

2.10 **Binder group management**

2.10.1 Binder or Binder Group is defined as Copper pairs bundled together, generally in groups of twenty-five (25), fifty (50) or one hundred (100).

2.10.2 With the exception of Loops on which a known disturber is deployed, BellSouth shall not designate, segregate or reserve particular Loops or binder groups for use solely by any particular advanced services Loop technology.

2.10.3 To the extent either Party seeks designation of a technology as a known disturber, that Party should file a petition for declaratory ruling with the FCC seeking such designation.

2.11 **Network Interference**

2.11.1 BellSouth and MCI shall not knowingly deploy or maintain any circuits, facilities or equipment that:

2.11.1.1 Interferes with or impairs service over any facilities of the other Party or a third party, in excess of interference or impairment explicitly permitted by Applicable Law or national standards;

2.11.1.2 Causes damage to the other Party's plant;

2.11.1.3 Creates unreasonable hazards to the other Party;

2.11.1.4 Compromises the privacy of any communications, unless otherwise authorized by tariffs or Applicable Law.

2.11.2 BellSouth and MCI shall not rearrange, move, disconnect, remove or attempt to repair any facilities owned by the other Party, other than by connection or disconnection to any interface means used, except with the consent of that Party. Provided, however, that either Party, upon discovering an immediate threat of serious physical damage to property or injury to person, may take whatever measures that Party deems reasonably necessary to remove the threat.

2.11.3 Each Party shall notify the other of situations that arise that may result in a service problem for the other Party. If either Party reasonably determines that any equipment or facilities of the other Party violates the provisions of Section 2.11.1, the determining Party shall give written notice to the other Party, which notice shall direct the other Party to cure the violation within forty-eight (48) hours. After receipt of the notice, the Parties agree to consult immediately and, if necessary, to inspect the arrangement. If the Parties determine that the violation cannot be cured within forty-eight (48) hours, at a minimum the curing Party shall commence curative measures within twenty-four (24) hours and exercise reasonable diligence to complete such measures as soon as possible thereafter.

3 Line Sharing

3.1 General

3.1.1 Line Sharing is defined as the process by which MCI provides digital subscriber line "xDSL" service over the same copper loop that BellSouth uses to provide Retail voice service, with BellSouth using the low frequency portion of the loop and MCI using the high frequency spectrum (as defined below) of the loop.

3.1.2 Line Sharing arrangements in service as of October 1, 2003, under a prior Interconnection Agreement between BellSouth and MCI, will be grandfathered until the earlier of the date the customer discontinues or moves XDSL service with MCI. Grandfathered arrangements pursuant to this Section will be billed at the rates set forth in Exhibit A.

3.1.3 No new line sharing arrangements may be ordered.

3.1.4 Any Line Sharing arrangements placed in service between October 2, 2003 and October 1, 2004, and not otherwise terminated, shall terminate on October 2, 2006.

3.1.5 The High Frequency Spectrum is defined as the frequency range above the voiceband on a copper loop facility carrying analog circuit-switched voiceband transmissions. Access to the High Frequency Spectrum is intended to allow MCI the ability to provide xDSL data services to the customer for which BellSouth provides voice services. The High Frequency Spectrum shall be available for any version of xDSL complying with Spectrum Management Class 5 of ANSI T1.417, American National Standard for Telecommunications, Spectrum Management for loop Transmission Systems. BellSouth will continue to have access to the low frequency portion of the loop spectrum (from 300 Hertz to at least 3000 Hertz, and potentially up to 3400 Hertz, depending on equipment and facilities) for the purposes of providing voice service. MCI shall only use xDSL technology that is within the PSD mask for Spectrum Management Class 5 as found in the above-mentioned document.

3.1.6 Access to the High Frequency Spectrum requires an unloaded, 2-wire copper loop. An unloaded loop is a copper loop with no load coils, low-pass filters, range extenders, DAMLs, or similar devices and minimal bridged taps consistent with ANSI T1.413 and T1.601.

3.1.7 BellSouth will provide Loop Modification to MCI on an existing loop for Line Sharing in accordance with procedures as specified in Section 2 of this Attachment. BellSouth is not required to modify a loop for access to the High Frequency spectrum if modification of that loop significantly degrades BellSouth's voice service. If MCI requests that BellSouth modify a loop and such modification significantly degrades the voice services on the loop, MCI shall pay for the loop to be restored to its original state.

3.1.8 Line Sharing shall only be available on loops on which BellSouth is also providing, and continues to provide, analog voice service directly to the customer. In the event the customer terminates its BellSouth provided voice service for any reason, or in the event BellSouth disconnects the customer's voice service pursuant to its tariffs or applicable law, and MCI desires to continue providing xDSL service on such loop, MCI or the new voice provider, shall be required to purchase a full stand-alone loop UNE. To the extent commercially reasonable, BellSouth shall give MCI notice in a reasonable time prior to disconnect. In those cases in which BellSouth no longer provides voice service to the customer and MCI purchases the full stand-alone loop, MCI may elect the type of loop it will purchase. MCI will pay the appropriate MRC and NRC rates for such loop as set forth in Exhibit A to this Attachment. In the event MCI purchases a voice grade loop, MCI acknowledges that such loop may not remain xDSL compatible.

3.1.9 In the event the customer terminates its BellSouth provided voice service, and MCI requests BellSouth to convert the Line Sharing arrangement to a Line Splitting arrangement (see below), BellSouth will discontinue billing MCI for the High Frequency Spectrum and begin billing the voice CLEC. BellSouth will continue to bill the Data LEC for all associated splitter charges if the Data LEC continues to use a BellSouth splitter.

3.1.10 Only one CLEC shall be permitted access to the High Frequency Spectrum of any particular loop.

3.1.11 After the transition period, any new customer must be served through a line splitting arrangement, through use of stand-alone copper loop, or through an arrangement that a competitive LEC has negotiated with the incumbent LEC to replace line sharing.

3.1.12 Once BellSouth has placed cross-connects on behalf of MCI and MCI chooses to rearrange its splitter or CLEC pairs, MCI may order Subsequent Activity. BellSouth will bill and MCI shall pay the Subsequent Activity charges as set forth in Exhibit A of this Attachment.

3.1.13 BellSouth will provide MCI the LSR format to be used when ordering the High Frequency Spectrum.

3.2 **Maintenance and Repair – Line Sharing**

3.2.1 MCI shall have access for test purposes to any Loop for which it has access to the High Frequency Spectrum. MCI may test from the collocation space, the Termination Point or the NID.

3.2.2 BellSouth will be responsible for repairing voice services and the physical line between the NID and the Termination Point. MCI will be responsible for repairing its data services. Each Party will be responsible for maintaining its own equipment.

3.2.3 MCI shall inform its customers to direct data problems to MCI, unless both voice and data services are impaired, in which event MCI should direct the customers to contact BellSouth.

3.2.4 Once a Party has isolated a trouble to the other Party's portion of the Loop, the Party isolating the trouble shall notify the customer that the trouble is on the other Party's portion of the Loop.

3.2.5 Notwithstanding anything else to the contrary in this Agreement, when BellSouth receives a voice trouble and isolates the trouble to the physical collocation arrangement belonging to MCI, BellSouth will notify MCI, and bill MCI accordingly. If BellSouth reports a trouble to MCI for the High Frequency Spectrum on the Loop, and no trouble actually exists within MCI's portion of the network, MCI may charge BellSouth, and BellSouth shall pay, for any dispatching and

testing (both inside and outside the central office) required by MCI in order to confirm the trouble is not within MCI's portion of the network.

3.3 **Line Splitting**

3.1 Line Splitting shall mean that a provider of data services (a Data LEC) and a provider of voice services (a Voice
CLEC) deliver voice and data service to customers over the same Loop. The Voice CLEC and Data LEC may be the same or different carriers.

3.2 In the event MCI provides its own switching or obtains switching from a third party, MCI may engage in line splitting arrangements with another CLEC using a splitter, provided by MCI or a third party, in a Collocation Arrangement at the central office, where the Loop terminates into a distribution frame or its equivalent. The Collocation arrangement may include direct cabling via a co-carrier cross-connect installed between MCI's and the other CLEC's or DLEC's collocation space and/or cross-connects using the CLEC's and/or DLEC's existing CFAs assigned to the collocation space.

3.3 MCI shall provide BellSouth with a signed LOA between it and the Data LEC or Voice CLEC with which it desires to provision Line Splitting services, if MCI will not provide voice and data services.

3.4 **Provisioning Line Splitting and Splitter Space**. The Data LEC, Voice CLEC or BellSouth may provide the splitter. When MCI or its authorized agent owns the splitter, Line Splitting requires the following: a non-designed analog Loop from the serving wire center to the NID at the customer's location; a collocation cross-connection connecting the Loop to the collocation space; a second collocation cross-connection from the collocation space connected to a voice port; the high frequency spectrum line activation, and a splitter. When BellSouth owns the splitter, Line Splitting requires the following: a non designed analog Loop from the serving wire center to the NID at the customer's location with CFA and splitter port assignments, and a collocation cross-connection from the collocation space connected to a voice port.

3.4.1 An unloaded 2-wire copper Loop must serve the customer. The meet point for the Voice CLEC and the Data LEC is the point of termination on the MDF for the Data LEC's cable and pairs.

3.4.2 The foregoing procedures are applicable to migration from a UNE-P arrangement to Line Splitting Service.

3.5 **Ordering – Line Splitting**. MCI shall use BellSouth's LSOD to order splitters from BellSouth and to activate and deactivate DS0 Collocation CFA for use with Line Splitting.

3.5.1 BellSouth's Local Ordering Handbook (LOH) shall provide MCI the LSR format to be used when ordering Line Splitting service.

3.5.2 BellSouth will provision Line Splitting service in compliance with BellSouth's Products and Services Interval Guide available at the website at http://www.interconnection.bellsouth.com

3.5.3 BellSouth will provide MCI access to Preordering LMU in accordance with the terms of this Agreement. BellSouth shall bill and MCI shall pay the rates for such services as described in Exhibit A.

3.5.4 BellSouth will provide Loop modification to MCI on an existing Loop in accordance with procedures developed in the Line Sharing Collaborative. High Frequency Spectrum (CO Based) Unbundled Loop Modification is a separate distinct service from Unbundled Loop Modification

set forth in Section 2.5 of this Attachment. Procedures for High Frequency Spectrum (CO Based) Unbundled Loop Modification may be found on the web at: http://www.interconnection.bellsouth.com/html/unes.html. Nonrecurring rates for this offering are as set forth in Exhibit A of this Attachment.

3.6 CLEC Provided Splitter – Line Splitting

3.6.1 To order High Frequency Spectrum on a particular Loop, MCI must have a DSLAM collocated in the central office that serves the customer of such Loop.

3.6.2 MCI must provide its own splitters in a central office and have installed its DSLAM in that central office.

3.6.3 MCI may purchase, install and maintain central office POTS splitters in its collocation arrangements. MCI may use such splitters for access to its customers and to provide digital subscriber line services to its customers using the High Frequency Spectrum. Existing Collocation rules and procedures and the terms and conditions relating to Collocation set forth in Attachment 4-Central Office shall apply.

3.6.4 Any splitters installed by MCI in its collocation arrangement shall comply with ANSI T1.413, Annex E, or any future ANSI splitter Standards. MCI may install any splitters that BellSouth deploys or permits to be deployed for itself or any BellSouth affiliate.

3.7 **Maintenance - Line Splitting**.

3.7.1 BellSouth will be responsible for repairing voice troubles and the troubles with the physical Loop between the NID at the customer's premises and the termination point.

3.7.2 MCI shall indemnify, defend and hold harmless BellSouth from and against any claims, losses, actions, causes of action, suits, demands, damages, injury, and costs including reasonable attorney fees, which arise out of actions related to the other service provider, except to the extent caused by BellSouth's gross negligence or willful misconduct.

3.7.3 MCI may designate a third Party to issue MCI's orders if MCI has a LOA on file with BellSouth authorizing the third Party to issue orders on its behalf. The orders will be provisioned in the same manner as if MCI issued the orders.

4 Unbundled Network Element Combinations

4.1 For purposes of this Section, references to "Currently Combined" Network Elements shall mean that the particular Network Elements requested by MCI are in fact already combined by BellSouth in the BellSouth network. References to "Ordinarily Combined" Network Elements shall mean that the particular Network Elements requested by MCI are not already combined by BellSouth in the location requested by MCI but are elements that are typically combined in BellSouth's network. References to "Not Typically Combined" Network Elements shall mean that the particular Network Elements requested by MCI are not elements that BellSouth combines for its use in its network.

4.1.1 Except as otherwise set forth in this Agreement, upon request, BellSouth shall perform the functions necessary to combine Network Elements in any manner, even if those elements are not ordinarily combined in BellSouth's network, provided that such Combination is technically

feasible and will not undermine the ability of other carriers to obtain access to Network Elements or to interconnect with BellSouth's network.

4.1.2 To the extent MCI requests a Combination for which BellSouth does not have methods and procedures in place to provide such Combination, rates and/or methods or procedures for such Combination will be developed pursuant to the BFR process.

5 Enhanced Extended Links (EELs)

5.1.1 EELs are combinations of Loops and Dedicated Transport as defined in this Attachment, together with any facilities, equipment, or functions necessary to combine those Network Elements, BellSouth shall provide MCI with EELs where the underlying Network Elements are available and are required to be provided pursuant to this Agreement and in all instances where the requesting carrier meets the eligibility requirements, if applicable**..**

5.1.2 High-capacity EELs are (1) combinations of Loop and Dedicated Transport, (2) Dedicated Transport commingled with a wholesale loop, or (3) a loop commingled with wholesale transport at the DS1 and/or DS3 level as described in 47 C.F.R. § 51.318(b).

5.1.3 By placing an order for a high-capacity EEL, MCI thereby certifies that the service eligibility criteria set forth herein are met for access to a converted high-capacity EEL, a new high-capacity EEL, or part of a high-capacity commingled EEL as a UNE. BellSouth shall have the right to audit MCI's high-capacity EELs as specified below.

5.1.4 Service Eligibility Criteria.

5.1.4.1 High capacity EELs must comply with the following service eligibility requirements. MCI must certify for each high-capacity EEL that all of the following service eligibility criteria are met:

5.1.4.2 MCI has received state certification to provide local voice service in the area being served or, in the absence of a state certification requirement, has complied with registration, tariffing, filing fee, or other regulatory requirements applicable to the provision of local voice service in that area.

5.1.4.3 For each combined circuit, including each DS1 circuit, each DS1 EEL, and each DS1-equivalent circuit on a DS3 EEL:

5.1.4.3.1 Each circuit to be provided to each customer will be assigned a local number prior to the provision of service over that circuit;

5.1.4.3.2 Each DS1-equivalent circuit on a DS3 EEL must have its own local number assignment, so that each DS3 must have at least twenty-eight (28) local voice numbers assigned to it;

5.1.4.3.3 Each circuit to be provided to each customer will have 911 or E911 capability prior to the provision of service over that circuit;

5.1.4.3.4 Each circuit to be provided to each customer will terminate in a collocation arrangement that meets the requirements of Section 5.1.5.1;

5.1.4.3.5 Each circuit to be provided to each customer will be served by an interconnection trunk over which MCI will transmit the calling party's number in connection with calls exchanged over the trunk ;

5.1.4.3.6 For each twenty-four (24) DS1 EELs or other facilities having equivalent capacity, MCI will have at least one (1) active DS1 local service interconnection trunk over which MCI will transmit the calling party's number in connection with calls exchanged over the trunk; and

5.1.4.3.7 Each circuit to be provided to each customer will be served by a switch capable of switching local voice traffic.

5.1.5 A collocation arrangement meets the requirements of Section 5.1.4.3.4 if it is:

5.1.5.1 Established pursuant to 47 USC 251(c)(6) and located at a BellSouth premises within the same LATA as the customer premises, when BellSouth is not the collocator; and

5.1.5.2 Located at a third party's premises within he same LATA as the customer premises, when BellSouth is the collocator.

5.1.6 By placing an order for an EEL, MCI shall be deemed to have made the certification requirement of Section 5.1.4.

5.1.7 BellSouth may, on an annual basis, audit MCI's records in order to verify compliance with the qualifying service eligibility criteria. The audit shall be conducted by a third party independent auditor, and the audit must be performed in accordance with the standards established by the American Institute for Certified Public Accountants (AICPA). To the extent the independent auditor's report concludes that MCI failed to comply with the service eligibility criteria, MCI must true-up any difference in payments, convert all noncompliant circuits to the appropriate service, and make the correct payments on a going-forward basis. In the event the auditor's report concludes that MCI did not comply in any material respect with the service eligibility criteria, MCI shall reimburse BellSouth for the cost of the independent auditor. To the extent the auditor's report concludes that MCI did comply in all material respects with the service eligibility criteria, BellSouth will reimburse MCI for its reasonable and demonstrable costs associated with the audit. MCI will maintain appropriate documentation to support its certifications.

5.1.8 Nothing in this Agreement shall be construed to be a waiver by BellSouth of any termination liabilities in its special access tariffs.

6 Dedicated Transport and Dark Fiber Transport

6.1 Dedicated Transport. Dedicated Transport is defined as BellSouth's transmission facilities between wire centers or switches owned by BellSouth, or between wire centers or switches owned by BellSouth and switches owned by MCI, including but not limited to DS1, DS3 and OCn level services, as well as dark fiber, dedicated to MCI. BellSouth shall not be required to provide access to OCn level Dedicated Transport under any circumstances pursuant to this Agreement. In addition, except as set forth in Section 6.2 below, BellSouth shall not be required to provide to MCI unbundled access to interoffice transmission facilities that do not connect a pair of wire centers or switches owned by BellSouth ("Entrance Facilities").

6.2 Transition for DS1 and DS3 Dedicated Transport Including DS1and DS3 Entrance Facilities

6.2.1 For purposes of this Section 6.2, the Transition Period for the Embedded Base of DS1 and DS3 Dedicated Transport Embedded Base of Entrance Facilities and for Excess DS1 and DS3 Dedicated Transport is the twelve (12) month period beginning March 11, 2005 and ending March 10, 2006.

6.2.2 For purposes of this Section 6.2, Embedded Base means DS1 and DS3 Dedicated Transport that were in service for MCI as of March 10, 2005, in those wire centers that, as of such date, met the criteria set forth in 6.2.4.1 or 6.2.4.2. Subsequent disconnects or loss of customers shall be removed from the Embedded Base.

6.2.2.1 For purposes of this Section 6.2, Embedded Base Entrance Facilities means Entrance Facilities that were in service for MCI as of March 10, 2005. Subsequent disconnects or loss of customers shall be removed from the Embedded Base.

6.2.2.2 For purposes of this Section 6.2, Excess DS1 and DS3 Dedicated Transport means those MCI DS1 and DS3 Dedicated Transport facilities in service as of March 10, 2005, in excess of the caps set forth in Section 6.2.4. Subsequent disconnects and loss of customers shall be removed from Excess DS1 and DS3 Loops.

6.2.3 For purposes of this Section 6.2, a Business Line is as defined in 47 C.F.R. § 51.5.

6.2.4 Notwithstanding anything to the contrary in this Agreement, and except as set forth in Section 6.2.12, for MCI's Embedded Base only, BellSouth shall make available Dedicated Transport as described in this Section 6.2 during the Transition Period:

6.2.4.1 DS1 Dedicated Transport where both wire centers at the end points of the route contain 38,000 or more Business Lines or four (4) or more fiber-based collocators.

6.2.4.2 DS3 Dedicated Transport where both wire centers at the end points of the route contain 24,000 or more Business Lines or three (3) or more fiber-based collocators.

6.2.5 Intentionally Omitted

6.2.6 Notwithstanding anything to the contrary in this Agreement, BellSouth shall make available Entrance Facilities only for MCI's Embedded Base Entrance Facilities and only during the Transition Period

6.2.7 Notwithstanding the Effective Date of this Agreement, during the Transition Period, the rates for MCI's Embedded Base of DS1 and DS3 Dedicated Transport and for MCI's Excess DS1 and DS3 Dedicated Transport as described in this Section 6.2 shall be as set forth in Exhibit B and the rates for MCI's Embedded Base Entrance Facilities as described in this Section 6.2 shall be as set forth in Exhibit A.

6.2.8 The Transition Period shall apply only to (1) MCI's Embedded Base and Embedded Base Entrance Facilities; and (2) MCI's Excess DS1 and DS3 Dedicated Transport. Further, MCI shall not add new DS1 or DS3 Dedicated Transport as described in this Section 6.2 pursuant to this Agreement, except pursuant to the self-certification process as set forth in Section 1.8 of this Attachment and as set forth in Section 6.2.12.

6.2.9 Once a wire center exceeds either of the thresholds set forth in this Section 6.2.4.1 or 6.2.4.2, no future DS1 Dedicated Transport unbundling will be required in that wire center.

6.2.10 Once a wire center exceeds either of the thresholds set forth in Section 6.2.4.2, no future DS3 Dedicated Transport will be required in that wire center.

6.2.11 No later than December 9, 2005, MCI shall submit spreadsheet(s) identifying all of the Embedded Base of circuits, Embedded Base Entrance Facilities and Excess DS1 and DS3 Dedicated Transport to be either disconnected or converted to other BellSouth services pursuant

to Section 1.6. The Parties shall negotiate a project schedule for the Conversion of the Embedded Base, Embedded Base Entrance Facilities and Excess DS1 and DS3 Dedicated Transport.

6.2.11.1 If MCI fails to submit the spreadsheet(s) specified in Section 6.2.11 above for all of its Embedded Base and Embedded Base Entrance Facilities and Excess DS1 and DS3 Dedicated Transport prior to December 9, 2005, BellSouth will identify MCI's remaining Embedded Base and Embedded Base Entrance Facilities and Excess DS1 and DS3 Dedicated Transport, if any, and will transition such circuits to the equivalent tariffed BellSouth service(s). Those circuits identified and transitioned by BellSouth pursuant to this Section 6.2.11.1 shall be subject to all applicable disconnect charges as set forth in this Agreement and the full non-recurring charges for installation of the equivalent tariffed BellSouth service as set forth in BellSouth's tariffs.

6.2.11.2 For Embedded Base circuits, Embedded Base Entrance Facilities and Excess DS1 and DS3 Dedicated Transport converted pursuant to Section 6.2.11 or transitioned pursuant to 6.2.11.1, the applicable recurring tariff charge shall apply to each circuit as of the earlier of the date each circuit is converted or transitioned, as applicable, or March 11, 2006.

6.2.12 Modifications and Updates to the Wire Center List and Subsequent Transition Periods

6.2.12.1 In the event BellSouth identifies additional wire centers that meet the criteria set forth in Section 6.2.4, but that were not included in the Initial Wire Center List, BellSouth shall include such additional wire centers in a carrier notification letter ("CNL"). Each such list of additional wire centers shall be considered a "Subsequent Wire Center List".

6.2.12.2 For FLORIDA, GEORGIA, NORTH CAROLINA and TENNESSEE, effective ten (10) business days after the date of a BellSouth CNL providing a Subsequent Wire Center List that includes one (1) or more additional wire centers, BellSouth shall not be required to unbundle DS1 and/or DS3 Dedicated Transport, as applicable, in such additional wire center(s), except pursuant to the self-certification process as set forth in Section 1.8 of this Attachment.

For ALABAMA, KENTUCKY, LOUISIANA, MISSISSIPPI and SOUTH CAROLINA, effective ten (10) business days after the date of a BellSouth CNL providing a Subsequent Wire Center List that includes one (1) or more additional wire centers, BellSouth shall not be required to unbundle DS1 and/or DS3 Dedicated Transport, as applicable, in such additional wire center(s), except pursuant to the self-certification process as set forth in Section 1.8 of this Attachment.

6.2.12.3 For purposes of Section 6.2.12, BellSouth shall make available DS1 and DS3 Dedicated Transport that was in service for MCI in a wire center on the Subsequent Wire Center List as of the tenth (10th) business day after the date of BellSouth's CNL identifying the Subsequent Wire Center List (Subsequent Embedded Base) until ninety (90) days after the tenth (10th) business day from the date of BellSouth's CNL identifying the Subsequent Wire Center List (Subsequent Transition Period).

6.2.12.4 Subsequent disconnects or loss of customers shall be removed from the Subsequent Embedded Base.

6.2.12.5 The rates set forth in Exhibit B shall apply to the Subsequent Embedded Base during the Subsequent Transition Period.

6.2.12.6 No later than forty (40) days from BellSouth's CNL identifying the Subsequent Wire Center List MCI shall submit a spreadsheet(s) identifying the Subsequent Embedded Base of circuits to be

disconnected or converted to other BellSouth services. The Parties shall negotiate a project schedule for the Conversion of the Subsequent Embedded Base.

6.2.12.6.1 If MCI fails to submit the spreadsheet(s) specified in Section 6.2.12.6 above for all of its Subsequent Embedded Base, within forty (40) days after the date of BellSouth's CNL identifying the Subsequent Wire Center List, BellSouth will identify MCI's remaining Subsequent Embedded Base, if any, and will transition such circuits to the equivalent tariffed BellSouth service(s). Those circuits identified and transitioned by BellSouth shall be subject to the applicable disconnect charges as set forth in this Agreement and the full non-recurring charges for installation of the equivalent tariffed BellSouth service as set forth in BellSouth's tariffs.

6.2.12.6.2 For Subsequent Embedded Base circuits converted pursuant to Section 6.2.12.6 or transitioned pursuant to Section 6.2.12.6.1, the applicable recurring tariff charges shall apply as of the earlier of the date each circuit is converted or transitioned, as applicable, or the first day after the end of the Subsequent Transition Period

6.3 BellSouth shall:

6.3.1 Provide MCI exclusive use of Dedicated Transport to a particular customer or carrier,

6.3.2 Provide all technically feasible features, functions, and capabilities of Dedicated Transport as outlined within the technical requirements within this Section;

6.3.3 Permit, to the extent technically feasible, MCI to connect such interoffice facilities to equipment designated by MCI, including but not limited to, MCI's collocated facilities; and

6.3.4 Permit, to the extent technically feasible, MCI to obtain the functionality provided by BellSouth's digital cross-connect systems.

6.4 BellSouth shall offer Dedicated Transport:

6.4.1 As capacity on a shared facility; and

6.4.2 As a circuit (i.e., DS0, DS1, DS3, STS-1) dedicated to MCI.

6.5 Dedicated Transport may be provided over facilities such as optical fiber, copper twisted pair, and coaxial cable, and shall include transmission equipment such as line terminating equipment, amplifiers, and regenerators.

6.6 MCI may obtain a maximum of ten (10) unbundled DS1 Dedicated Transport circuits or twelve (12) unbundled DS3 Dedicated Transport circuits, or their equivalent, on each route where the respective Dedicated Transport is available as a Network Element. A route is defined as a transmission path between one of BellSouth's wire centers or switches and another of BellSouth's wire centers or switches. A route between two (2) points may pass through one or more intermediate wire centers or switches. Transmission paths between identical end points are the same "route", irrespective of whether they pass through the same intermediate wire centers or switches, if any.

6.7 <u>Technical Requirements</u>.

6.7.1 BellSouth shall offer DS0 equivalent interface transmission rates for DS0 or voice grade Dedicated Transport. For DS1 or DS3 circuits, Dedicated Transport shall at a minimum meet the performance, availability, jitter, and delay requirements specified for Customer Interface to Central Office (CI to CO) connections in the applicable industry standards.

6.7.2 BellSouth shall offer the following interface transmission rates for Dedicated Transport.

6.7.2.1 DS0 Equivalent;

6.7.2.2 DS1;

6.7.2.3 DS3; and

6.7.2.4 SDH (Synchronous Digital Hierarchy) Standard interface rates are in accordance with International Telecommunications Union (ITU) Recommendation G.707 and Plesiochronous Digital Hierarchy (PDH) rates per ITU Recommendation G.704.

6.7.3 BellSouth shall design Dedicated Transport according to its network infrastructure. MCI shall specify the termination points for Dedicated Transport.

6.7.4 At a minimum, Dedicated Transport shall meet each of the requirements set forth in the applicable industry technical references.

6.8 BellSouth Technical References:

6.8.1 TR-TSY-000191 Alarm Indication Signals Requirements and Objectives, Issue 1, May 1986.

6.8.2 TR 73501 LightGate®Service Interface and Performance Specifications, Issue D, June 1995.

6.8.3 TR 73525 MegaLink®Service, MegaLink Channel Service and MegaLink Plus Service Interface and Performance Specifications, Issue C, May 1996.

6.9 Unbundled Channelization (Multiplexing).

6.9.1 To the extent that MCI is purchasing DS1 or DS3 or STS-1 Dedicated Transport pursuant to this Agreement, Unbundled Channelization (UC) provides the optional multiplexing capability that will allow a DS1 (1.544 Mbps) or DS3 (44.736 Mbps) or STS-1 (51.84 Mbps) Network Elements to be multiplexed or channelized at a BellSouth central office. Channelization can be accomplished through the use of a multiplexer or a digital cross-connect system at the discretion of BellSouth. Once UC has been installed, MCI may request channel activation on a channelized facility and BellSouth shall connect the requested facilities via COCIs. The COCI must be compatible with the lower capacity facility and ordered with the lower capacity facility. The BellSouth offices in which UC is available are listed in NECA 4.

6.9.2 BellSouth shall make available the following channelization systems and interfaces:

6.9.2.1 DS1 Channelization System: channelizes a DS1 signal into a maximum of twenty-four (24) DS0s. The following COCI are available: Voice Grade, Digital Data and ISDN.

6.9.2.2 DS3 Channelization System: channelizes a DS3 signal into a maximum of twenty-eight (28) DS1s. A DS1 COCI is available with this system.

6.9.2.3 STS-1 Channelization System: channelizes a STS-1 signal into a maximum of twenty-eight (28) DS1s. A DS1 COCI is available with this system.

6.10 Technical Requirements.

6.10.1 In order to assure proper operation with BellSouth provided central office multiplexing functionality, MCI's channelization equipment must adhere strictly to form and protocol

standards. MCI must also adhere to such applicable industry standards for the multiplex channel bank, for voice frequency encoding, for various signaling schemes, and for sub rate digital access.

6.11 Dark Fiber Transport. Dark Fiber Transport is defined as Dedicated Transport that consists of unactivated optical interoffice transmission facilities without attached signal regeneration, multiplexing, aggregation or other electronics. Except as set forth in Section 6.11.1 below, BellSouth shall not be required to provide access to Dark Fiber Transport Entrance Facilities pursuant to this Agreement.

6.11.1 Transition for Dark Fiber Transport and Dark Fiber Transport Entrance Facilities

6.11.1.1 For purposes of this Section 6.11, the Transition Period for the Embedded Base of Dark Fiber Transport is the eighteen (18) month period beginning March 11, 2005 and ending September 10, 2006.

6.11.1.2 For purposes of this Section 6.11, Embedded Base means Dark Fiber Transport that was in service for MCI as of March 10, 2005 in those wire centers that, as of such date, met the criteria set forth in 6.9.1.4.1. Subsequent disconnects or loss of customers shall be removed from the Embedded Base.

6.11.1.3 For purposes of this Section 6.11, a Business Line is as defined in 47 C.F.R. § 51.5.

6.11.1.4 Notwithstanding anything to the contrary in this Agreement, BellSouth shall make available Dark Fiber Transport as described in this Section 6.11 only for MCI's Embedded Base during the Transition Period:

6.11.1.4.1 Dark Fiber Transport where both wire centers at the end points of the route contain 24,000 or more Business Lines or three (3) or more fiber-based collocators.

6.11.1.5 Notwithstanding the Effective Date of this Agreement, during the Transition Period, the rates for MCI's Embedded Base of Dark Fiber Transport as described in Section 6.11.1.1 shall be as set forth in Exhibit B and the rates for MCI's Embedded Base of Dark Fiber Transport Entrance Facilities as described in Section 6.11.1 shall be as set forth in Exhibit A.

6.11.1.6 The Transition Period shall apply only to MCI's Embedded Base of Dark Fiber Transport and Dark Fiber Entrance Facilities. MCI shall not add new Dark Fiber Transport as described in this Section 6.11 except pursuant to the self-certification process as set forth in Section 1.8 of this Attachment and as set forth in Section 6.11.1.10 below. Further, MCI shall not add new Dark Fiber Entrance Facilities pursuant to this Agreement.

6.11.1.7 Once a wire center exceeds either of the thresholds set forth in Section 6.11.1.4.1, no future Dark Fiber Transport unbundling will be required in that wire center.

6.11.1.8 No later than June 10, 2006 MCI shall submit spreadsheet(s) identifying all of the Embedded Base of Dark Fiber Transport and Dark Fiber Entrance Facilities to be either disconnected or converted to other BellSouth services as Conversions pursuant to Section 1.6. The Parties shall negotiate a project schedule for the Conversion of the Embedded Base.

6.11.1.8.1 If MCI fails to submit the spreadsheet(s) specified in Section 6.11.1.8 above for all of its Embedded Base prior to June 10, 2006, BellSouth will identify MCI's remaining Embedded Base, if any, and will transition such circuits to the equivalent tariffed BellSouth service(s). Those circuits identified and transitioned by BellSouth pursuant to this Section 6.11.1.8.1 shall be subject to all applicable disconnect charges as set forth in this Agreement and the full

nonrecurring charges for installation of the equivalent tariffed BellSouth service as set forth in BellSouth's tariffs.

6.11.1.8 For Embedded Base circuits converted pursuant to Section 6.11.1.8 or transitioned pursuant to 6.11.1.8.1, the applicable recurring tariff charge shall apply to each circuit as of the earlier of the date each circuit is converted or transitioned, as applicable, or September 11, 2006..

6.11.1.9 Modifications and Updates to the Wire Center List and Subsequent Transition Periods

6.11.1.9.1 In the event BellSouth identifies additional wire centers that meet the criteria set forth in Section 6.11.1.4.1, but that were not included in the Initial Wire Center List, BellSouth shall include such additional wire centers in a CNL. Each such list of additional wire centers shall be considered a "Subsequent Wire Center List".

6.11.1.9.2 Effective ten (10) business days after the date of a BellSouth CNL providing a Subsequent Wire Center List, BellSouth shall not be required to provide unbundled access to Dark Fiber Transport, as applicable, in such additional wire center(s), except pursuant to the self-certification process as set forth in Section 1.8 of this Attachment.

6.11.1.9.3 For purposes of Section 6.11.1.10, BellSouth shall make available DS1 and DS3 Loops that were in service for MCI in a wire center on the Subsequent Wire Center List as of the tenth (10th) business day after the date of BellSouth's CNL identifying the Subsequent Wire Center List (Subsequent Embedded Base) until ninety (90) days after the tenth (10th) business day from the date of BellSouth's CNL identifying the Subsequent Wire Center List (Subsequent Transition Period).

6.11.1.9.4 Subsequent disconnects or loss of customers shall be removed from the Subsequent Embedded Base.

6.11.1.9.5 The rates set forth in Exhibit B shall apply to the Subsequent Embedded Base during the Subsequent Transition Period.

6.11.1.9.6 No later than forty (40) days from BellSouth's CNL identifying the Subsequent Wire Center List CNL shall submit a spreadsheet(s) identifying the Subsequent Embedded Base of circuits to be disconnected or converted to other BellSouth services. The Parties shall negotiate a project schedule for the Conversion of the Subsequent Embedded Base.

6.11.1.9.6.1 If MCI fails to submit the spreadsheet(s) specified in Section 6.11.1.10.6 above for all of its Subsequent Embedded Base within forty (40) days after the date of BellSouth's CNL identifying the Subsequent Wire Center List, BellSouth will identify MCI's remaining Subsequent Embedded Base, if any, and will transition such circuits to the equivalent tariffed BellSouth service(s). Those circuits identified and transitioned by BellSouth shall be subject to the applicable disconnect charges as set forth in this Agreement and the full nonrecurring charges for installation of the equivalent tariffed BellSouth service as set forth in BellSouth's tariffs.

6.11.1.9.6.2 For Subsequent Embedded Base circuits converted pursuant to Section 6.11.1.10.6 or transitioned pursuant to Section 6.11.1.10.6.1, the applicable recurring tariff charges shall apply as of the earlier of the date each circuit is converted or transitioned, as applicable, or the first day after the end of the Subsequent Transition Period.

6.12 Rearrangements

6.12.1 A request to move a working MCI CFA to another MCI CFA, where both CFAs terminate in the same BellSouth Central Office ("Change in CFA"), shall not constitute the establishment of new service. The applicable rates set forth in Exhibit A.

6.12.2 Requests to re-terminate one end of a facility that is not a Change in CFA constitute the establishment of new service and require disconnection of existing service and the applicable rates set forth in Exhibit A shall apply.

6.12.3 Upon request of MCI, BellSouth shall project manage the Change in CFA or re-termination of a facility as described in Sections 6.12.1 and 6.12.2 above and MCI may request OC-TS for such orders.

6.12.4 BellSouth shall accept a Letter of Authorization (LOA) between MCI and another carrier that will allow MCI to connect a facility, or Combination that includes Dedicated Transport to the other carrier's collocation space or to another carrier's CFA associated with higher bandwidth transport.

7 Automatic Location Identification/Data Management System (ALI/DMS)

7.1 911 and E911 Databases.

7.1.1 BellSouth shall provide MCI with nondiscriminatory access to 911 and E911 databases on an unbundled basis, in accordance with 47 CFR § 51.319 (f).

7.1.2 The ALI/DMS database contains customer information (including name, address, telephone information, and sometimes special information from the local service provider or End User) used to determine to which PSAP to route the call. The ALI/DMS database is used to provide enhanced routing flexibility for E911. MCI will be required to provide the BellSouth 911 database vendor daily service order updates to E911 database in accordance with Section 7.2.1.

7.2 Technical Requirements

7.2.1 BellSouth's 911 database vendor shall provide MCI the capability of providing updates to the ALI/DMS database through a specified electronic interface. MCI shall contact BellSouth's 911 database vendor directly to request interface. MCI shall provide updates directly to BellSouth's 911 database vendor on a daily basis. Updates shall be the responsibility of MCI and BellSouth shall not be liable for the transactions between MCI and BellSouth's 911 database vendor.

7.2.2 It is MCI's responsibility to retrieve and confirm statistical data and to correct errors obtained from BellSouth's 911 database vendor on a daily basis. All errors will be assigned a unique error code and the description of the error and the corrective action is described in the CLEC Users Guide for Facility Based Providers that is found on the BellSouth Interconnection Web site.

7.2.3 MCI shall conform to the BellSouth standards as described in the CLEC Users Guide to E911 for Facilities Based Providers that is located on the BellSouth Interconnection Web site at http://www.interconnection.bellsouth.com/guides.

7.2.4 Stranded Unlocks are defined as customer records in BellSouth's ALI/DMS database that have not been migrated for over ninety (90) days to MCI, as a new provider of local service to the customer. Stranded Unlocks are those customer records that have been "unlocked" by the previous local exchange carrier that provided service to the customer and are open for MCI to assume responsibility for such records.

7.2.5 Based upon customer record ownership information available in the NPAC database, BellSouth shall provide a Stranded Unlock annual report to MCI that reflects all Stranded Unlocks that remain in the ALI/DMS database for over ninety (90) days. MCI shall review the Stranded Unlock report, identify its customer records and request to either delete such records or migrate the records to MCI within two (2) months following the date of the Stranded Unlock report provided by BellSouth. MCI shall reimburse BellSouth for any charges BellSouth's database vendor imposes on BellSouth for the deletion of MCI's records.

7.3 911 PBX Locate Service®. 911 PBX Locate Service is comprised of a database capability and a separate transport component.

7.3.1 Description of Product. The transport component provides a dedicated trunk path from a Private Branch Exchange (PBX) switch to the appropriate BellSouth 911 tandem.

7.3.1.1 The database capability allows MCI to offer an E911 service to its PBX customers that identifies to the Public Safety Answering Point (PSAP) the physical location of the MCI PBX 911 customer station telephone number for the 911 call that is placed by the customer.

7.3.2 MCI may order either the database capability or the transport component as desired or MCI may order both components of the service.

7.4 911 PBX Locate Database Capability. MCI's customer or MCI's customer's database management agent (DMA) must provide the customer PBX station telephone numbers and corresponding address and location data to BellSouth's 911 database vendor. The data will be loaded and maintained in BellSouth's ALI database.

7.4.1 Ordering, provisioning, testing and maintenance shall be provided by MCI pursuant to the 911 PBX Locate Marketing Service Description (MSD) that is located on the BellSouth Interconnection Web site.

7.4.2 MCI's customer, or MCI's customer database management agent must provide ongoing updates to BellSouth's 911 database vendor within a commercially reasonable timeframe of all PBX station telephone number adds, moves and deletions. It will be the responsibility of MCI to ensure that the customer or DMA maintain the data pertaining to each customer's extension managed by the 911 PBX Locate Service product. MCI should not submit telephone number updates for specific PBX station telephone numbers that are submitted by MCI's customer, or MCI's customer DMA under the terms of 911 PBX Locate product.

7.4.2.1 MCI must provision all PBX station numbers in the same LATA as the E911 tandem.

7.4.2.2 In Florida, Georgia, Louisiana, and North Carolina, the Parties agree that the following statutes apply to the provision of BellSouth's PBX Locate Service:

Florida

Georgia

Louisiana

North Carolina

Each Party's belief that the statutes cited above apply to BellSouth's PBX Locate Service does not constitute a warranty, a representation, or legal advice provided by such Party to the other Party.

If it is determined by the Commission or a court that one or more of these statutes does not apply to Bellsouth's PBX Locate Service, each Party shall bear whatever risks may accrue to such Party in relying on its belief regarding the application of statutes, and neither Party shall be liable to the other Party for a mistaken belief regarding the application of the statutes.

7.4.2.3 For the states of Alabama, Kentucky, Mississippi, South Carolina and Tennessee, MCI agrees to release, indemnify, defend and hold harmless BellSouth from any and all loss, claims, demands, suits, or other action, or any liability whatsoever, whether suffered, made, instituted or asserted by MCI's customer or by any other party or person, for any personal injury to or death of any person or persons, or for any loss, damage or destruction of any property, whether owned by MCI or others, or for any infringement or invasion of the right of privacy of any person or persons, caused or claimed to have been caused, directly or indirectly, by the installation, operation, failure to operate, maintenance, removal, presence, condition, location or use of PBX Locate Service features or by any services which are or may be furnished by BellSouth in connection therewith, including but not limited to the identification of the telephone number, address or name associated with the telephone used by the party or parties accessing 911 services using 911 PBX Locate Service hereunder, except to the extent caused by BellSouth's gross negligence or wilful misconduct. MCI is responsible for assuring that its authorized customers comply with the provisions of these terms and that unauthorized persons do not gain access to or use the 911 PBX Locate Service through user names, passwords, or other identifiers assigned to MCI's customer or DMA pursuant to these terms. Specifically, MCI's customer or DMA must keep and protect from use by any unauthorized individual identifiers, passwords, and any other security token(s) and devices that are provided for access to this product.

7.4.3 MCI may only use BellSouth PBX Locate Service solely for the purpose of validating and correcting 911 related data for MCI's customer's telephone numbers for which it has direct management authority.

7.5 <u>911 PBX Locate Transport Component.</u> The 911 PBX Locate Service transport component requires MCI to order a CAMA type dedicated trunk from MCI's customer premise to the appropriate BellSouth 911 tandem pursuant to the following provisions.

7.5.1 Except as otherwise set forth below, a minimum of two (2) customer specific, dedicated 911 trunks are required between the MCI's customer premise and the BellSouth 911 tandem as described in BellSouth's Technical Reference (TR) 73576 and in accordance with the 911 PBX Locate Marketing Service Description located on the BellSouth Interconnection Web site. MCI is responsible for connectivity between the customer's PBX and MCI's switch or POP location. MCI will then order 911 trunks from their switch or POP location to the BellSouth 911 tandem. The dedicated trunks shall be, at a minimum, DS0 level trunks configured as part of a digital interface (delivered over a MCI purchased DS1 facility that hands off at a DS1 or higher level digital or optical interface). MCI is responsible for ensuring that the PBX switch is capable of sending the calling station's Direct Inward Dial (DID) telephone number to the BellSouth 911 tandem in a specified Multi-frequency (MF) Address Signaling Protocol. If the PBX switch supports Primary Rate ISDN (PRI) and the calling stations are DID numbers, then the 911call can be transmitted using PRI, and there will be no requirement for the PBX Locate Transport component.

7.6 <u>Ordering and Provisioning.</u> MCI will submit an Access Service Request (ASR) to BellSouth to order a minimum of two (2) customer specific 911 trunks from its switch or POP location to the BellSouth 911 tandem.

7.6.1 Testing and maintenance shall be provided by MCI pursuant to the 911 PBX Locate Marketing Service description that is located on the BellSouth Interconnection Web site.

7.7 Rates. Rates for the 911 PBX Locate Service database component are set forth in Exhibit A of Attachment 2. Trunks and facilities for 911 PBX Locate transport component may be ordered by MCI pursuant to the terms and conditions set forth in Attachment 3.

UNBUNDLED NETWORK ELEMENTS - South Carolina														Attachment: 2 Exh. A			
CATEGORY	RATE ELEMENTS	Interim	Zone	BCS	USOC	RATES($)					Svc Order Submitted Elec per LSR	Svc Order Submitted Manually per LSR	Incremental Charge - Manual Svc Order vs. Electronic-1st	Incremental Charge - Manual Svc Order vs. Electronic-Add'l	Incremental Charge - Manual Svc Order vs. Electronic-Disc 1st	Incremental Charge - Manual Svc Order vs. Electronic-Disc Add'l
						Rec	Nonrecurring		Nonrecurring Disconnect		OSS Rates($)					
							First	Add'l	First	Add'l	SOMEC	SOMAN	SOMAN	SOMAN	SOMAN	SOMAN
The "Zone" shown in the sections for stand-alone loops or loops as part of a combination refers to Geographically Deaveraged UNE Zones. To view Geographically Deaveraged UNE Zone Designations by Central Office, refer to internet Website: http://www.inte																
OPERATIONS SUPPORT SYSTEMS (OSS) - "STATE SPECIFIC RATES"																
NOTE: (1) CLEC should contact its contract negotiator if it prefers the "regional" OSS charges as offered by BellSouth. The OSS charges currently contained in this rate exhibit are the PSC state ordered "state specificl" service ordering charges. CLEC may elect either the state specific Commission ordered rates for the service ordering charges, or CLEC may elect the regional service ordering charge, however, CLEC can not obtain a mixture of the two regardless if CLEC has a interconnection contract established in each of the 9 states.																
NOTE: (2) Any element that can be ordered electronically will be billed according to the SOMEC rate listed in this category. Please refer to BellSouth's Local Ordering Handbook (LOH) to determine if a product can be ordered electronically. For those elements that cannot be ordered electronically at present per the LOH, the listed SOMEC rate in this category reflects the charge that would be billed to a CLEC once electronic ordering capabilities come on-line for that element. Otherwise, the manual ordering charge, SOMAN, will be applied to a CLECs bill when it submits an LSR to BellSouth.																
	OSS - Electronic Service Order Charge, Per Local Service Request (LSR) - UNE Only				SOMEC		5.92	0.00	3.80	0.00						
	OSS - Manual Service Order Charge, Per Local Service Request (LSR) - UNE Only				SOMAN		15.69	0.00	1.97	0.00						
UNE SERVICE DATE ADVANCEMENT CHARGE																
	UNE Expedite Charge per Circuit or Line Assignable USOC, per Day			UAL, UEANL, UCL, UEF, UDF, UEQ, UDL, UENTW, UDN, UEA, UHL, ULC, USL, U1T12, U1T48, U1TD1, U1TD3, U1TDX, U1TO3, U1TS1, U1TVX, UC1BC, UC1BL, UC1CC, UC1CL, UC1DC, UC1DL, UC1EC, UC1EL, UC1FC, UC1FL, UC1GC, UC1GL, UC1HC, UC1HL, UDL12, UDL48, UDLO3, UDLSX, UE3,	SDASP		200.00	200.00								
ORDER MODIFICATION CHARGE																
	Order Modification Charge (OMC)	N					26.21	0.00	0.00	0.00						
	Order Modification Additional Dispatch Charge (OMCAD)	N					150.00	0.00	0.00	0.00						
UNBUNDLED EXCHANGE ACCESS LOOP																
2-WIRE ANALOG VOICE GRADE LOOP																
	2-Wire Analog Voice Grade Loop - Service Level 1- Zone 1		1	UEANL	UEAL2	14.94	37.92	17.62	23.56	5.32						
	2-Wire Analog Voice Grade Loop - Service Level 1- Zone 2		2	UEANL	UEAL2	21.39	37.92	17.62	23.56	5.32						
	2-Wire Analog Voice Grade Loop - Service Level 1- Zone 3		3	UEANL	UEAL2	26.72	37.92	17.62	23.56	5.32						
	2-Wire Analog Voice Grade Loop - Service Level 1- Zone 1		1	UEANL	UEASL	14.94	37.92	17.62	23.56	5.32						
	2-Wire Analog Voice Grade Loop - Service Level 1- Zone 2		2	UEANL	UEASL	21.39	37.92	17.62	23.56	5.32						
	2-Wire Analog Voice Grade Loop - Service Level 1- Zone 3		3	UEANL	UEASL	26.72	37.92	17.62	23.56	5.32						
	Bulk Migration, per 2 Wire Voice Loop-SL1			UEANL	UREPN		31.49	13.86	23.56	5.32						
	Bulk Migration Order Coordination, per 2 Wire Voice Loop-SL1			UEANL	UREPM		8.17	8.17								
	Unbundled Miscellaneous Rate Element, Tag Loop at End User Premise			UEANL	URETL		8.95	0.88								
	Loop Testing - 1st Half Hour			UEANL	URET1		34.23									
	Loop Testing - Additional Half Hour			UEANL	URETA		19.90	19.90								
	CLEC to CLEC Conversion Charge (UVL-SL1)	N		UEANL	UREWO		15.81	8.96	23.56	5.32						
	Unbundled Voice Loop, Non-Design Voice Loop, billing for BST providing make-up (Engineering Information - E.I.)			UEANL	UEANM		13.47	13.47								
	Manual Order Coordination for UVL-SL1s (per loop)			UEANL	UEAMC		8.17	8.17								
2-WIRE Unbundled COPPER LOOP																
	2-Wire Unbundled Copper Loop - Non-Designed Zone 1		1	UEQ	UEQ2X	12.94	36.40	16.10	22.66	4.42						
	2 Wire Unbundled Copper Loop - Non-Designed - Zone 2		2	UEQ	UEQ2X	14.51	36.40	16.10	22.66	4.42						
	2 Wire Unbundled Copper Loop - Non-Designed - Zone 3		3	UEQ	UEQ2X	15.02	36.40	16.10	22.66	4.42						
	Bulk Migration, per 2 Wire UCL-ND			UEQ	UREPN		30.12	12.49	22.66	4.42						
	Bulk Migration Order Coordination, per 2 Wire UCL-ND			UEQ	UREPM		8.17	8.17								

CATEGORY	RATE ELEMENTS	Interim	Zone	BCS	USOC	RATES($)					Svc Order Submitted Elec per LSR	Svc Order Submitted Manually per LSR	Incremental Charge - Manual Svc Order vs. Electronic-1st	Incremental Charge - Manual Svc Order vs. Electronic-Add'l	Incremental Charge - Manual Svc Order vs. Electronic-Disc 1st	Incremental Charge - Manual Svc Order vs. Electronic-Disc Add'l
						Rec	Nonrecurring		Nonrecurring Disconnect		OSS Rates($)					
							First	Add'l	First	Add'l	SOMEC	SOMAN	SOMAN	SOMAN	SOMAN	SOMAN
	Unbundled Miscellaneous Rate Element, Tag Loop at End User Premise			UEQ	URETL		8.95	0.88								
	Manual Order Coordination 2 Wire Unbundled Copper Loop - Non-Designed (per loop)			UEQ	USBMC		8.17	8.17								
	Unbundled Copper Loop, Non-Design Copper Loop, billing for BST providing make-up (Engineering Information - E.I.)			UEQ	UEQMU		13.47	13.47								
	Loop Testing - 1st Half Hour			UEQ	URET1		34.23									
	Loop Testing - Additional Half Hour			UEQ	URETA		19.90	19.00								
	CLEC to CLEC Conversion Charge (UCL-ND)	N		UEQ	UREWO		14.30	7.45	22.66	4.42						
UNBUNDLED EXCHANGE ACCESS LOOP																
2-WIRE ANALOG VOICE GRADE LOOP																
	2-Wire Analog Voice Grade Loop - Service Level 2 w/Loop or Ground Start Signaling - Zone 1		1	UEA, NTCVG	UEAL2	16.68	105.98	68.43	53.05	10.61						
	2-Wire Analog Voice Grade Loop - Service Level 2 w/Loop or Ground Start Signaling - Zone 2		2	UEA, NTCVG	UEAL2	23.13	105.98	68.43	53.05	10.61						
	2-Wire Analog Voice Grade Loop - Service Level 2 w/Loop or Ground Start Signaling - Zone 3		3	UEA, NTCVG	UEAL2	28.46	105.98	68.43	53.05	10.61						
	2-Wire Analog Voice Grade Loop - Service Level 2 w/Reverse Battery Signaling - Zone 1		1	UEA, NTCVG	UEAR2	16.68	105.98	68.43	53.05	10.61						
	2-Wire Analog Voice Grade Loop - Service Level 2 w/Reverse Battery Signaling - Zone 2		2	UEA, NTCVG	UEAR2	23.13	105.98	68.43	53.05	10.61						
	2-Wire Analog Voice Grade Loop - Service Level 2 w/Reverse Battery Signaling - Zone 3		3	UEA, NTCVG	UEAR2	28.46	105.98	68.43	53.05	10.61						
	Bulk Migration, per 2 Wire Voice Loop-SL2			UEA	UREPN		93.56	50.14	53.05	10.61						
	Bulk Migration Order Coordination, per 2 Wire Voice Loop-SL2			UEA	UREPM		0.00	0.00								
	Switch-As-Is Conversion rate per UNE Loop, Single LSR, (per DS0)	N		UEA, NTCVG	URESL		24.88	3.51								
	Switch-As-Is Conversion rate per UNE Loop, Spreadsheet, (per DS0)	N		UEA, NTCVG	URESP		26.37	4.99								
	CLEC to CLEC Conversion Charge (UAL-SL2)	N		UEA, NTCVG	UREWO		87.90	36.44	53.05	10.61						
	Loop Tagging - Service Level 2 (SL2)			UEA, NTCVG	URETL		11.24	1.10								
4-WIRE ANALOG VOICE GRADE LOOP																
	4-Wire Analog Voice Grade Loop - Zone 1		1	UEA, NTCVG	UEAL4	32.59	132.38	94.83	59.35	14.61						
	4-Wire Analog Voice Grade Loop - Zone 2		2	UEA, NTCVG	UEAL4	43.89	132.38	94.83	59.35	14.61						
	4-Wire Analog Voice Grade Loop - Zone 3		3	UEA, NTCVG	UEAL4	43.38	132.38	94.83	59.35	14.61						
	Switch-As-Is Conversion rate per UNE Loop, Single LSR, (per DS0)			UEA, NTCVG	URESL		24.88	3.51								
	Switch-As-Is Conversion rate per UNE Loop, Spreadsheet, (per DS0)			UEA, NTCVG	URESP		26.37	4.99								
	CLEC to CLEC Conversion Charge (UAL-SL2)	N		UEA, NTCVG	UREWO		87.90	36.44	53.05	10.61						
2-WIRE ISDN DIGITAL GRADE LOOP																
	2-Wire ISDN Digital Grade Loop - Zone 1		1	UDN	U1L2X	25.21	117.58	80.03	53.05	10.61						
	2-Wire ISDN Digital Grade Loop - Zone 2		2	UDN	U1L2X	32.76	117.58	80.03	53.05	10.61						
	2-Wire ISDN Digital Grade Loop - Zone 3		3	UDN	U1L2X	37.70	117.58	80.03	53.05	10.61						
	CLEC to CLEC Conversion Charge (UDN-SL2)	N		UDN	UREWO		91.82	44.25	53.05	10.61						
2-WIRE ASYMMETRICAL DIGITAL SUBSCRIBER LINE (ADSL) COMPATIBLE LOOP																
	2 Wire Unbundled ADSL Loop including manual service inquiry & facility reservation - Zone 1		1	UAL	UAL2X	12.19	120.84	70.56	50.37	7.93						
	2 Wire Unbundled ADSL Loop including manual service inquiry & facility reservation - Zone 2		2	UAL	UAL2X	13.71	120.84	70.56	50.37	7.93						
	2 Wire Unbundled ADSL Loop including manual service inquiry & facility reservation - Zone 3		3	UAL	UAL2X	14.14	120.84	70.56	50.37	7.93						
	2 Wire Unbundled ADSL Loop without manual service inquiry & facility reservaton - Zone 1		1	UAL	UAL2W	12.19	95.81	57.82	50.37	7.93						
	2 Wire Unbundled ADSL Loop without manual service inquiry & facility reservaton - Zone 2		2	UAL	UAL2W	13.71	95.81	57.82	50.37	7.93						
	2 Wire Unbundled ADSL Loop without manual service inquiry & facility reservaton - Zone 3		3	UAL	UAL2W	14.14	95.81	57.82	50.37	7.93						
	CLEC to CLEC Conversion Charge (UAL-SL2)	N		UAL	UREWO		86.38	40.48	50.37	7.93						

UNBUNDLED NETWORK ELEMENTS - South Carolina

Attachment: 2 Exh. A

CATEGORY	RATE ELEMENTS	Interim	Zone	BCS	USOC	RATES($)					Svc Order Submitted Elec per LSR	Svc Order Submitted Manually per LSR	Incremental Charge - Manual Svc Order vs. Electronic-1st	Incremental Charge - Manual Svc Order vs. Electronic-Add'l	Incremental Charge - Manual Svc Order vs. Electronic-Disc 1st	Incremental Charge - Manual Svc Order vs. Electronic-Disc Add'l
						Rec	Nonrecurring		Nonrecurring Disconnect		OSS Rates($)					
							First	Add'l	First	Add'l	SOMEC	SOMAN	SOMAN	SOMAN	SOMAN	SOMAN
2-WIRE HIGH BIT RATE DIGITAL SUBSCRIBER LINE (HDSL) COMPATIBLE LOOP																
	2 Wire Unbundled HDSL Loop including manual service inquiry & facility reservation - Zone 1		1	UHL	UHL2X	9.58	129.52	79.24	50.37	7.93						
	2 Wire Unbundled HDSL Loop including manual service inquiry & facility reservation - Zone 2		2	UHL	UHL2X	10.92	129.52	79.24	50.37	7.93						
	2 Wire Unbundled HDSL Loop including manual service inquiry & facility reservation - Zone 3		3	UHL	UHL2X	11.40	129.52	79.24	50.37	7.93						
	2 Wire Unbundled HDSL Loop without manual service inquiry and facility reservation - Zone 1		1	UHL	UHL2W	9.58	104.49	66.50	50.37	7.93						
	2 Wire Unbundled HDSL Loop without manual service inquiry and facility reservation - Zone 2		2	UHL	UHL2W	10.92	104.49	66.50	50.37	7.93						
	2 Wire Unbundled HDSL Loop without manual service inquiry and facility reservation - Zone 3		3	UHL	UHL2W	11.40	104.49	66.50	50.37	7.93						
	CLEC to CLEC Conversion Charge (UHL-SL2)	N		UHL	UREWO		86.32	40.48	50.37	7.93						
4-WIRE HIGH BIT RATE DIGITAL SUBSCRIBER LINE (HDSL) COMPATIBLE LOOP																
	4 Wire Unbundled HDSL Loop including manual service inquiry and facility reservation - Zone 1		1	UHL	UHL4X	16.02	158.18	107.89	55.12	10.38						
	4-Wire Unbundled HDSL Loop including manual service inquiry and facility reservation - Zone 2		2	UHL	UHL4X	14.33	158.18	107.89	55.12	10.38						
	4-Wire Unbundled HDSL Loop including manual service inquiry and facility reservation - Zone 3		3	UHL	UHL4X	16.84	158.18	107.89	55.12	10.38						
	4-Wire Unbundled HDSL Loop without manual service inquiry and facility reservation - Zone 1		1	UHL	UHL4W	16.02	133.14	95.16	55.12	10.38						
	4-Wire Unbundled HDSL Loop without manual service inquiry and facility reservation - Zone 2		2	UHL	UHL4W	14.33	133.14	95.16	55.12	10.38						
	4-Wire Unbundled HDSL Loop without manual service inquiry and facility reservation - Zone 3		3	UHL	UHL4W	16.84	133.14	95.16	55.12	10.38						
	CLEC to CLEC Conversion Charge (UHL-SL2)	N		UHL	UREWO		86.32	40.48	50.37	7.93						
4-WIRE DS1 DIGITAL LOOP																
	4-Wire DS1 Digital Loop - Zone 1		1	USL, NTCD1	USLXX	79.51	253.03	157.89	44.80	11.73						
	4-Wire DS1 Digital Loop - Zone 2		2	USL, NTCD1	USLXX	136.00	253.03	157.89	44.80	11.73						
	4-Wire DS1 Digital Loop - Zone 3		3	USL, NTCD1	USLXX	229.15	253.03	157.89	44.80	11.73						
	Switch-As-Is Conversion rate per UNE Loop, Single LSR, (per DS1)	N		USL, NTCD1	URESL		24.88	3.51								
	Switch-As-Is Conversion rate per UNE Loop, Spreadsheet, (per DS1)	N		USL, NTCD1	URESP		26.37	4.99								
	CLEC to CLEC Conversion Charge (USL-DS1)	N		USL	UREWO		101.30	43.13	44.80	11.73						
4-WIRE 19.2, 56 OR 64 KBPS DIGITAL GRADE LOOP																
	4 Wire Unbundled Digital 19.2 Kbps		1	UDL, NTCUD	UDL19	29.93	126.66	89.12	59.35	14.61						
	4 Wire Unbundled Digital 19.2 Kbps		2	UDL, NTCUD	UDL19	33.99	126.66	89.12	59.35	14.61						
	4 Wire Unbundled Digital 19.2 Kbps		3	UDL, NTCUD	UDL19	34.74	126.66	89.12	59.35	14.61						
	4 Wire Unbundled Digital Loop 56 Kbps - Zone 1		1	UDL, NTCUD	UDL56	29.93	126.66	89.12	59.35	14.61						
	4 Wire Unbundled Digital Loop 56 Kbps - Zone 2		2	UDL, NTCUD	UDL56	33.99	126.66	89.12	59.35	14.61						
	4 Wire Unbundled Digital Loop 56 Kbps - Zone 3		3	UDL, NTCUD	UDL56	34.74	126.66	89.12	59.35	14.61						
	4 Wire Unbundled Digital Loop 64 Kbps - Zone 1		1	UDL, NTCUD	UDL64	29.93	126.66	89.12	59.35	14.61						
	4 Wire Unbundled Digital Loop 64 Kbps - Zone 2		2	UDL, NTCUD	UDL64	33.99	126.66	89.12	59.35	14.61						
	4 Wire Unbundled Digital Loop 64 Kbps - Zone 3		3	UDL, NTCUD	UDL64	34.74	126.66	89.12	59.35	14.61						
	Switch-As-Is Conversion rate per UNE Loop, Single LSR, (per DS0)	N		UDL, NTCUD	URESL		24.88	3.51								
	Switch-As-Is Conversion rate per UNE Loop, Spreadsheet, (per DS0)	N		UDL, NTCUD	URESP		26.37	4.99								
	CLEC to CLEC Conversion Charge (UDL-Kbps)	N		UDL, NTCUD	UREWO		102.34	49.85	59.35	14.61						
2-WIRE Unbundled COPPER LOOP																
	2-Wire Unbundled Copper Loop-Designed including manual service inquiry & facility reservation - Zone 1		1	UCL	UCLPB	12.19	119.91	69.62	50.37	7.93						
	2-Wire Unbundled Copper Loop-Designed including manual service inquiry & facility reservation - Zone 2		2	UCL	UCLPB	13.71	119.91	69.62	50.37	7.93						
	2 Wire Unbundled Copper Loop-Designed including manual service inquiry & facility reservation - Zone 3		3	UCL	UCLPB	14.14	119.91	69.62	50.37	7.93						

UNBUNDLED NETWORK ELEMENTS - South Carolina														Attachment: 2 Exh. A			
CATEGORY		RATE ELEMENTS	Interim	Zone	BCS	USOC	RATES($)					Svc Order Submitted Elec per LSR	Svc Order Submitted Manually per LSR	Incremental Charge - Manual Svc Order vs. Electronic-1st	Incremental Charge - Manual Svc Order vs. Electronic-Add'l	Incremental Charge - Manual Svc Order vs. Electronic-Disc 1st	Incremental Charge - Manual Svc Order vs. Electronic-Disc Add'l
							Rec	Nonrecurring		Nonrecurring Disconnect		OSS Rates($)					
								First	Add'l	First	Add'l	SOMEC	SOMAN	SOMAN	SOMAN	SOMAN	SOMAN
		2-Wire Unbundled Copper Loop-Designed without manual service inquiry and facility reservation - Zone 1		1	UCL	UCLPW	12.19	94.87	56.89	50.37	7.93						
		2-Wire Unbundled Copper Loop-Designed without manual service inquiry and facility reservation - Zone 2		2	UCL	UCLPW	13.71	94.87	56.89	50.37	7.93						
		2-Wire Unbundled Copper Loop-Designed without manual service inquiry and facility reservation - Zone 3		3	UCL	UCLPW	14.14	94.87	56.89	50.37	7.93						
		CLEC to CLEC Conversion Charge without outside dispatch (UCL-Des)	N		UCL	UREWO		94.87	42.57	50.37	7.93						
	4-WIRE COPPER LOOP																
		4-Wire Copper Loop-Designed including manual service inquiry and facility reservation - Zone 1		1	UCL	UCL4S	19.64	144.17	93.88	55.12	10.38						
		4-Wire Copper Loop-Designed including manual service inquiry and facility reservation - Zone 2		2	UCL	UCL4S	20.90	144.17	93.88	55.12	10.38						
		4-Wire Copper Loop-Designed including manual service inquiry and facility reservation - Zone 3		3	UCL	UCL4S	19.34	144.17	93.88	55.12	10.38						
		4-Wire Copper Loop-Designed without manual service inquiry and facility reservation - Zone 1		1	UCL	UCL4W	19.64	119.13	81.15	55.12	10.38						
		4-Wire Copper Loop-Designed without manual service inquiry and facility reservation - Zone 2		2	UCL	UCL4W	20.90	119.13	81.15	55.12	10.38						
		4-Wire Copper Loop-Designed without manual service inquiry and facility reservation - Zone 3		3	UCL	UCL4W	19.34	119.13	81.15	55.12	10.38						
		CLEC to CLEC Conversion Charge without outside dispatch (UCL-Des)	N		UCL	UREWO		94.87	42.57	50.37	7.93						
		Order Coordination for Unbundled Copper Loops (per loop)			UCL	UCLMC		8.17	8.17								
		Order Coordination for Specified Conversion Time (per LSR)			UEA, UDN, UAL, UHL, UDL, NTCVG, NTCUD, USL, NTCD1, UEANL	OCOSL		18.13									
LOOP MODIFICATION																	
		Unbundled Loop Modification, Removal of Load Coils - 2 Wire pair less than or equal to 18k ft, per Unbundled Loop			UAL, UHL, UCL, UEQ, ULS, UEA, UEANL, UEPSR, UEPSB	ULM2L		32.46	32.46								
		Unbundled Loop Modification Removal of Load Coils - 4 Wire less than or equal to 18K ft, per Unbundled Loop			UHL, UCL, UEA	ULM4L		32.46	32.46								
		Unbundled Loop Modification Removal of Bridged Tap Removal, per unbundled loop			UAL, UHL, UCL, UEQ, ULS, UEA, UEANL, UEPSR, UEPSB	ULMBT		32.48	32.48								
SUB-LOOPS																	
	Sub-Loop Distribution																
		Sub-Loop - Per Cross Box Location - CLEC Feeder Facility Set-Up			UEANL, UEF	USBSA		241.42	241.42								
		Sub-Loop - Per Cross Box Location - Per 25 Pair Panel Set-Up			UEANL, UEF	USBSB		22.69	22.69								
		Sub-Loop - Per Building Equipment Room - CLEC Feeder Facility Set-Up			UEANL	USBSC		177.84	177.84								
		Sub-Loop - Per Building Equipment Room - Per 25 Pair Panel Set-Up			UEANL	USBSD		55.58	55.58								
		Sub-Loop Distribution Per 2-Wire Analog Voice Grade Loop - Zone 1		1	UEANL	USBN2	8.87	65.94	31.03	45.35	6.71						
		Sub-Loop Distribution Per 2-Wire Analog Voice Grade Loop - Zone 2		2	UEANL	USBN2	12.58	65.94	31.03	45.35	6.71						
		Sub-Loop Distribution Per 2-Wire Analog Voice Grade Loop - Zone 3		3	UEANL	USBN2	14.79	65.94	31.03	45.35	6.71						
		Order Coordination for Unbundled Sub-Loops, per sub-loop pair			UEANL	USBMC		8.17	8.17								
		Sub-Loop Distribution Per 4-Wire Analog Voice Grade Loop - Zone 1		1	UEANL	USBN4	14.11	79.21	44.29	49.82	9.09						

UNBUNDLED NETWORK ELEMENTS - South Carolina														Attachment: 2 Exh. A			
CATEGORY		RATE ELEMENTS	Interim	Zone	BCS	USOC	RATES($)					Svc Order Submitted Elec per LSR	Svc Order Submitted Manually per LSR	Incremental Charge - Manual Svc Order vs. Electronic-1st	Incremental Charge - Manual Svc Order vs. Electronic-Add'l	Incremental Charge - Manual Svc Order vs. Electronic-Disc 1st	Incremental Charge - Manual Svc Order vs. Electronic-Disc Add'l
							Rec	Nonrecurring		Nonrecurring Disconnect		OSS Rates($)					
								First	Add'l	First	Add'l	SOMEC	SOMAN	SOMAN	SOMAN	SOMAN	SOMAN
		Sub-Loop Distribution Per 4-Wire Analog Voice Grade Loop - Zone 2		2	UEANL	USBN4	19.40	79.21	44.29	49.82	9.09						
		Sub-Loop Distribution Per 4-Wire Analog Voice Grade Loop - Zone 3		3	UEANL	USBN4	18.90	79.21	44.29	49.82	9.09						
		Order Coordination for Unbundled Sub-Loops, per sub-loop pair			UEANL	USBMC		8.17	8.17								
		Sub-Loop 2-Wire Intrabuilding Network Cable (INC)			UEANL	USBR2	2.41	53.13	18.21	45.35	6.71						
		Order Coordination for Unbundled Sub-Loops, per sub-loop pair			UEANL	USBMC		8.17	8.17								
		Sub-Loop 4-Wire Intrabuilding Network Cable (INC)			UEANL	USBR4	5.36	59.38	24.47	49.82	9.09						
		Order Coordination for Unbundled Sub-Loops, per sub-loop pair			UEANL	USBMC		8.17	8.17								
		Loop Testing - 1st Half Hour			UEANL	URET1		34.23									
		Loop Testing - Additional Half Hour			UEANL	URETA		19.90	19.90								
		2 Wire Copper Unbundled Sub-Loop Distribution - Zone 1		1	UEF	UCS2X	7.11	65.94	31.03	45.35	6.71						
		2 Wire Copper Unbundled Sub-Loop Distribution - Zone 2		2	UEF	UCS2X	9.83	65.94	31.03	45.35	6.71						
		2 Wire Copper Unbundled Sub-Loop Distribution - Zone 3		3	UEF	UCS2X	10.48	65.94	31.03	45.35	6.71						
		Order Coordination for Unbundled Sub-Loops, per sub-loop pair			UEF	USBMC		8.17	8.17								
		4 Wire Copper Unbundled Sub-Loop Distribution - Zone 1		1	UEF	UCS4X	7.85	79.21	44.29	49.82	9.09						
		4 Wire Copper Unbundled Sub-Loop Distribution - Zone 2		2	UEF	UCS4X	14.17	79.21	44.29	49.82	9.09						
		4 Wire Copper Unbundled Sub-Loop Distribution - Zone 3		3	UEF	UCS4X	12.64	79.21	44.29	49.82	9.09						
		Order Coordination for Unbundled Sub-Loops, per sub-loop pair			UEF	USBMC		8.17	8.17								
		Loop Tagging Service Level 1, Unbundled Copper Loop, Non-Designed and Distribution Subloops	N		UEF, UEANL	URETL		8.95	0.88								
		Loop Testing - Basic 1st Half Hour			UEF	URET1		34.23									
		Loop Testing - Basic Additional Half Hour			UEF	URETA		19.90	19.90								
	Unbundled Sub-Loop Modification																
		Unbundled Sub-Loop Modification - 2-W Copper Dist Load Coil/Equip Removal per 2-W PR			UEF	ULM2X		176.17	5.11								
		Unbundled Sub-loop Modification - 4-W Copper Dist Load Coil/Equip Removal per 4-W PR			UEF	ULM4X		176.17	5.11								
		Unbundled Loop Modification, Removal of Bridge Tap, per unbundled loop			UEF	ULMBT		278.82	6.13								
	Unbundled Network Terminating Wire (UNTW)																
		Unbundled Network Terminating Wire (UNTW) per Pair			UENTW	UENPP	0.3303	30.20	30.20								
	Network Interface Device (NID)																
		Network Interface Device (NID) - 1-2 lines			UENTW	UND12		43.68	28.79								
		Network Interface Device (NID) - 1-6 lines			UENTW	UND16		64.42	49.53								
		Network Interface Device Cross Connect - 2 W			UENTW	UNDC2		5.92	5.92								
		Network Interface Device Cross Connect - 4W			UENTW	UNDC4		5.92	5.92								
UNE OTHER, PROVISIONING ONLY - NO RATE																	
		Unbundled Contact Name, Provisioning Only - no rate			UAL, UCL, UDC, UDL, UDN, UEA, UHL, UEANL, UEF, UEQ, UENTW, NTCVG, NTCUD, NTCD1, USL	UNECN	0.00	0.00									
		Unbundled DS1 Loop - Superframe Format Option - no rate			USL	CCOSF	0.00	0.00									
		Unbundled DS1 Loop - Expanded Superframe Format option - no rate			USL	CCOEF	0.00	0.00									
		NID - Dispatch and Service Order for NID installation			UENTW	UNDBX	0.00	0.00									
		UNTW Circuit Establishment, Provisioning Only - No Rate			UENTW	UENCE	0.00	0.00									
HIGH CAPACITY UNBUNDLED LOCAL LOOP																	
	NOTE: minimum billing period of three months for DS3/STS-1 Local Loop																
		High Capacity Unbundled Local Loop - DS3 - Per Mile per month			UE3	1L5ND	12.26										

UNBUNDLED NETWORK ELEMENTS - South Carolina														Attachment: 2 Exh. A			
CATEGORY		RATE ELEMENTS	Interim	Zone	BCS	USOC	RATES($)					Svc Order Submitted Elec per LSR	Svc Order Submitted Manually per LSR	Incremental Charge - Manual Svc Order vs. Electronic-1st	Incremental Charge - Manual Svc Order vs. Electronic-Add'l	Incremental Charge - Manual Svc Order vs. Electronic-Disc 1st	Incremental Charge - Manual Svc Order vs. Electronic-Disc Add'l
							Rec	Nonrecurring		Nonrecurring Disconnect		OSS Rates($)					
								First	Add'l	First	Add'l	SOMEC	SOMAN	SOMAN	SOMAN	SOMAN	SOMAN
		High Capacity Unbundled Local Loop - DS3 - Facility Termination per month			UE3	UE3PX	306.36	452.52	264.53	119.75	83.77						
		High Capacity Unbundled Local Loop - STS-1 - Per Mile per month			UDLSX	1L5ND	12.26										
		High Capacity Unbundled Local Loop - STS-1 - Facility Termination per month			UDLSX	UDLS1	313.49	452.52	264.53	119.75	83.77						
LOOP MAKE-UP																	
		Loop Makeup - Preordering Without Reservation, per working or spare facility queried (Manual).			UMK	UMKLW		24.04	24.04								
		Loop Makeup - Preordering With Reservation, per spare facility queried (Manual).			UMK	UMKLP		25.49	25.49								
		Loop Makeup--With or Without Reservation, per working or spare facility queried (Mechanized)			UMK	UMKMQ		0.34	0.34								
LINE SPLITTING																	
	END USER ORDERING-CENTRAL OFFICE BASED																
		Line Splitting - per line activation DLEC owned splitter			UEPSR UEPSB	UREOS	0.61										
MAINTENANCE OF SERVICE																	
		No Trouble Found - per 1/2 hour increments - Basic	N					80.00	55.00								
		No Trouble Found - per 1/2 hour increments - Overtime	N					90.00	65.00								
		No Trouble Found - per 1/2 hour increments - Premium	N					100.00	75.00								
	UNBUNDLED EXCHANGE ACCESS LOOP																
	2-WIRE ANALOG VOICE GRADE LOOP																
		2 Wire Analog Voice Grade Loop-Service Level 1-Line Splitting-Zone 1		1	UEPSR UEPSB	UEALS	14.94	37.92	17.62	23.56	5.32						
		2 Wire Analog Voice Grade Loop-Service Level 1-Line Splitting-Zone 1		1	UEPSR UEPSB	UEABS	14.94	37.92	17.62	23.56	5.32						
		2 Wire Analog Voice Grade Loop- Service Level 1-Line Splitting-Zone 2		2	UEPSR UEPSB	UEALS	21.39	37.92	17.62	23.56	5.32						
		2 Wire Analog Voice Grade Loop- Service Level 1-Line Splitting-Zone 2		2	UEPSR UEPSB	UEABS	21.39	37.92	17.62	23.56	5.32						
		2 Wire Analog Voice Grade Loop-Service Level 1-Line Splitting-Zone 3		3	UEPSR UEPSB	UEALS	26.72	37.92	17.62	23.56	5.32						
		2 Wire Analog Voice Grade Loop-Service Level 1-Line Splitting-Zone 3		3	UEPSR UEPSB	UEABS	26.72	37.92	17.62	23.56	5.32						
	PHYSICAL COLLOCATION																
		Physical Collocation-2 Wire Cross Connects (Loop) for Line Splitting			UEPSR UEPSB	PE1LS	0.0341	12.32	11.83	6.04	5.45						
	VIRTUAL COLLOCATION																
		Virtual Collocation-2 Wire Cross Connects (Loop) for Line Splitting			UEPSR UEPSB	VE1LS	0.0317	12.32	11.83	6.04	5.45						
UNBUNDLED DEDICATED TRANSPORT																	
	INTEROFFICE CHANNEL - DEDICATED TRANSPORT																
		Interoffice Channel - Dedicated Transport - 2-Wire Voice Grade - Per Mile per month			U1TVX	1L5XX	0.0167										
		Interoffice Channel - Dedicated Transport- 2- Wire Voice Grade - Facility Termination			U1TVX	U1TV2	24.30	40.63	27.47	16.77	6.91						
		Interoffice Channel - Dedicated Transpor t- 2-Wire Voice Grade Rev Bat. - Per Mile per month			U1TVX	1L5XX	0.0167										
		Interoffice Channel - Dedicated Transport- 2- Wire VG Rev Bat. - Facility Termination			U1TVX	U1TR2	24.30	40.63	27.47	16.77	6.91						
		Interoffice Channel - Dedicated Transport - 4-Wire Voice Grade - Per Mile per month			U1TVX	1L5XX	0.0167										
		Interoffice Channel - Dedicated Transport - 4- Wire Voice Grade - Facility Termination			U1TVX	U1TV4	21.29	40.63	27.47	16.77	6.91						
		Interoffice Channel - Dedicated Transport - 56 kbps - per mile per month			U1TDX	1L5XX	0.0167										
		Interoffice Channel - Dedicated Transport - 56 kbps - Facility Termination			U1TDX	U1TD5	16.76	40.63	27.47	16.77	6.91						

UNBUNDLED NETWORK ELEMENTS - South Carolina														Attachment: 2 Exh. A			
CATEGORY		RATE ELEMENTS	Interim	Zone	BCS	USOC	RATES($)					Svc Order Submitted Elec per LSR	Svc Order Submitted Manually per LSR	Incremental Charge - Manual Svc Order vs. Electronic-1st	Incremental Charge - Manual Svc Order vs. Electronic-Add'l	Incremental Charge - Manual Svc Order vs. Electronic-Disc 1st	Incremental Charge - Manual Svc Order vs. Electronic-Disc Add'l
							Rec	Nonrecurring		Nonrecurring Disconnect		OSS Rates($)					
								First	Add'l	First	Add'l	SOMEC	SOMAN	SOMAN	SOMAN	SOMAN	SOMAN
		Interoffice Channel - Dedicated Transport - 64 kbps - per mile per month			U1TDX	1L5XX	0.0167										
		Interoffice Channel - Dedicated Transport - 64 kbps - Facility Termination			U1TDX	U1TD6	16.76	40.63	27.47	16.77	6.91						
		Interoffice Channel - Dedicated Channel - DS1 - Per Mile per month			U1TD1	1L5XX	0.3415										
		Interoffice Channel - Dedicated Tranport - DS1 - Facility Termination			U1TD1	U1TF1	77.14	89.47	81.99	16.39	14.48						
		Interoffice Channel - Dedicated Transport - DS3 - Per Mile per month			U1TD3	1L5XX	8.02										
		Interoffice Channel - Dedicated Transport - DS3 - Facility Termination per month			U1TD3	U1TF3	880.65	279.37	163.12	60.33	58.59						
		Interoffice Channel - Dedicated Transport - STS-1 - Per Mile per month			U1TS1	1L5XX	8.02										
		Interoffice Channel - Dedicated Transport - STS-1 - Facility Termination			U1TS1	U1TFS	880.55	279.37	163.12	60.33	58.59						
	UNBUNDLED DARK FIBER																
		Dark Fiber, Per Four Fiber Strands, Per Route Mile Or Fraction Thereof - Interoffice Transport			UDF, UDFCX	1L5DF	36.41										
		Dark Fiber, Per Four Fiber Strands, Per Route Mile Or Fraction Thereof - Interoffice Transport			UDF, UDFCX	UDF14		640.51	138.17	317.76	198.11						
911 PBX LOCATE			N														
	911 PBX LOCATE DATABASE CAPABILITY		N														
		Service Establishment per CLEC per End User Account	N		9PBDC	9PBEU		1,813.00									
		Changes to TN Range or Customer Profile	N		9PBDC	9PBTN		181.40									
		Per Telephone Number (Monthly)	N		9PBDC	9PBMM	0.07										
		Change Company (Service Provider) ID	N		9PBDC	9PBPC		532.48									
		PBX Locate Service Support per CLEC (Monthlt)	N		9PBDC	9PBMR	181.29										
		Service Order Charge	N		9PBDC	9PBSC		15.69									
	911 PBX LOCATE TRANSPORT COMPONENT																
	See Att 3																
LNP Query Service																	
		LNP Charge Per query					0.0008837										
		LNP Service Establishment Manual						25.09		23.07							
		LNP Service Provisioning with Point Code Establishment						594.82	303.88	269.53	198.18						
ENHANCED EXTENDED LINK (EELs)																	
	NOTE: The monthly recurring and non-recurring charges below will apply and the Switch-As-Is Charge will not apply for UNE combinations provisioned as ' Ordinarily Combined' Network Elements.																
	NOTE: The monthly recurring and the Switch-As-Is Charge and not the non-recurring charges below will apply for UNE combinations provisioned as ' Currently Combined' Network Elements.																
	EXTENTED 2-WIRE VOICE GRADE EXTENDED LOOP WITH DEDICATED DS1 INTEROFFICE TRANSPORT																
		First 2-Wire VG Loop (SL2) in Combination - Zone 1		1	UNCVX	UEAL2	16.68	105.98	68.43	53.05	10.61						
		First 2-Wire VG Loop (SL2) in Combination - Zone 2		2	UNCVX	UEAL2	23.13	105.98	68.43	53.05	10.61						
		First 2-Wire VG Loop (SL2) in Combination - Zone 3		3	UNCVX	UEAL2	28.46	105.98	68.43	53.05	10.61						
		Interoffice Transport - Dedicated - DS1 combination - Per Mile per month			UNC1X	1L5XX	0.27										
		Interoffice Transport - Dedicated - DS1 combination - Facility Termination per month			UNC1X	U1TF1	61.71	89.47	81.99	16.39	14.48						
		1/0 Channelization System in combination Per Month			UNC1X	MQ1	107.57	91.24	62.71	10.56	9.81						
		Voice Grade COCI - Per Month			UNCVX	1D1VG	0.56	6.59	4.73	0.00	0.00						
		Each Additional 2-Wire VG Loop (SL 2) in Combination - Zone 1		1	UNCVX	UEAL2	16.68	105.98	68.43	53.05	10.61						
		Each Additional 2-Wire VG Loop (SL 2) in Combination - Zone 2		2	UNCVX	UEAL2	23.13	105.98	68.43	53.05	10.61						
		Each Additional 2-Wire VG Loop (SL 2) in Combination - Zone 3		3	UNCVX	UEAL2	28.46	105.98	68.43	53.05	10.61						
		Voice Grade COCI - Per Month			UNCVX	1D1VG	0.56	6.59	4.73	0.00	0.00						
	EXTENDED 4-WIRE VOICE GRADE EXTENDED LOOP WITH DEDICATED DS1 INTEROFFICE TRANSPORT																
		First 4-Wire Analog Voice Grade Loop in Combination - Zone 1		1	UNCVX	UEAL4	32.59	132.38	94.83	59.35	14.61						

CATEGORY		RATE ELEMENTS	Interim	Zone	BCS	USOC	RATES($)					Svc Order Submitted Elec per LSR	Svc Order Submitted Manually per LSR	Incremental Charge - Manual Svc Order vs. Electronic-1st	Incremental Charge - Manual Svc Order vs. Electronic-Add'l	Incremental Charge - Manual Svc Order vs. Electronic-Disc 1st	Incremental Charge - Manual Svc Order vs. Electronic-Disc Add'l
							Rec	Nonrecurring		Nonrecurring Disconnect		OSS Rates($)					
								First	Add'l	First	Add'l	SOMEC	SOMAN	SOMAN	SOMAN	SOMAN	SOMAN
		First 4-Wire Analog Voice Grade Loop in Combination - Zone 2		2	UNCVX	UEAL4	43.89	132.38	94.83	59.35	14.61						
		First 4-Wire Analog Voice Grade Loop in Combination - Zone 3		3	UNCVX	UEAL4	43.38	132.38	94.83	59.35	14.61						
		Interoffice Transport - Dedicated - DS1 combination - Per Mile Per Month			UNC1X	1L5XX	0.27										
		Interoffice Transport - Dedicated - DS1 - Facility Termination Per Month			UNC1X	U1TF1	61.71	89.47	81.99	16.39	14.48						
		1/0 Channel System in combination Per Month			UNC1X	MQ1	107.57	91.24	62.71	10.56	9.81						
		Voice Grade COCI in combination - per month			UNCVX	1D1VG	0.56	6.59	4.73	0.00	0.00						
		Additional 4-Wire Analog Voice Grade Loop in same DS1 Interoffice Transport Combination - Zone 1		1	UNCVX	UEAL4	32.59	132.38	94.83	59.35	14.61						
		Additional 4-Wire Analog Voice Grade Loop in same DS1 Interoffice Transport Combination - Zone 2		2	UNCVX	UEAL4	43.89	132.38	94.83	59.35	14.61						
		Additional 4-Wire Analog Voice Grade Loop in same DS1 Interoffice Transport Combination - Zone 3		3	UNCVX	UEAL4	43.38	132.38	94.83	59.35	14.61						
		Additional Voice Grade COCI in combination - per month			UNCVX	1D1VG	0.56	6.59	4.73	0.00	0.00						
	EXTENDED 4-WIRE 56 KBPS EXTENDED DIGITAL LOOP WITH DEDICATED DS1 INTEROFFICE TRANSPORT																
		First 4-Wire 56Kbps Digital Grade Loop in Combination - Zone 1		1	UNCDX	UDL56	29.93	126.66	89.12	59.35	14.61						
		First 4-Wire 56Kbps Digital Grade Loop in Combination - Zone 2		2	UNCDX	UDL56	33.99	126.66	89.12	59.35	14.61						
		First 4-Wire 56Kbps Digital Grade Loop in Combination - Zone 3		3	UNCDX	UDL56	34.74	126.66	89.12	59.35	14.61						
		Interoffice Transport - Dedicated - DS1 combination - Per Mile Per Month			UNC1X	1L5XX	0.27										
		Interoffice Transport - Dedicated - DS1 - combination Facility Termination Per Month			UNC1X	U1TF1	61.71	89.47	81.99	16.39	14.48						
		1/0 Channel System in combination Per Month			UNC1X	MQ1	107.57	91.24	62.71	10.56	9.81						
		OCU-DP COCI (data) per month (2.4-64kbs)			UNCDX	1D1DD	1.19	6.59	4.73	0.00	0.00						
		Additional 4-Wire 56Kbps Digital Grade Loop in same DS1 Interoffice Transport Combination - Zone 1		1	UNCDX	UDL56	29.93	126.66	89.12	59.35	14.61						
		Additional 4-Wire 56Kbps Digital Grade Loop in same DS1 Interoffice Transport Combination - Zone 2		2	UNCDX	UDL56	33.99	126.66	89.12	59.35	14.61						
		Additional 4-Wire 56Kbps Digital Grade Loop in same DS1 Interoffice Transport Combination - Zone 3		3	UNCDX	UDL56	34.74	126.66	89.12	59.35	14.61						
		Additional OCU-DP COCI (data) - in combination per month (2.4-64kbs)			UNCDX	1D1DD	1.19	6.59	4.73	0.00	0.00						
	EXTENDED 4-WIRE 64 KBPS EXTENDED DIGITAL LOOP WITH DEDICATED DS1 INTEROFFICE TRANSPORT																
		First 4-Wire 64Kbps Digital Grade Loop in Combination - Zone 1		1	UNCDX	UDL64	29.93	126.66	89.12	59.35	14.61						
		First 4-Wire 64Kbps Digital Grade Loop in Combination - Zone 2		2	UNCDX	UDL64	33.99	126.66	89.12	59.35	14.61						
		First 4-Wire 64Kbps Digital Grade Loop in Combination - Zone 3		3	UNCDX	UDL64	34.74	126.66	89.12	59.35	14.61						
		Interoffice Transport - Dedicated - DS1 combination - Per Mile Per Month			UNC1X	1L5XX	0.27										
		interoffice Transport - Dedicated - DS1 combination - Facility Termination Per Month			UNC1X	U1TF1	61.71	89.47	81.99	16.39	14.48						
		1/0 Channel System in combination Per Month			UNC1X	MQ1	107.57	91.24	62.71	10.56	9.81						
		OCU-DP COCI (data) - in combination - per month (2.4-64kbs)			UNCDX	1D1DD	1.19	6.59	4.73	0.00	0.00						
		Additional 4-Wire 64Kbps Digital Grade Loop in same DS1 Interoffice Transport Combination - Zone 1		1	UNCDX	UDL64	29.93	126.66	89.12	59.35	14.61						
		Additional 4-Wire 64Kbps Digital Grade Loop in same DS1 Interoffice Transport Combination - Zone 2		2	UNCDX	UDL64	33.99	126.66	89.12	59.35	14.61						
		Additional 4-Wire 64Kbps Digital Grade Loop in same DS1 Interoffice Transport Combination - Zone 3		3	UNCDX	UDL64	34.74	126.66	89.12	59.35	14.61						
		Additional OCU-DP COCI (data) - in combination - per month (2.4-64kbs)			UNCDX	1D1DD	1.19	6.59	4.73	0.00	0.00						

UNBUNDLED NETWORK ELEMENTS - South Carolina

Attachment: 2 Exh. A

CATEGORY	RATE ELEMENTS	Interim	Zone	BCS	USOC	RATES($)					Svc Order Submitted Elec per LSR	Svc Order Submitted Manually per LSR	Incremental Charge - Manual Svc Order vs. Electronic-1st	Incremental Charge - Manual Svc Order vs. Electronic-Add'l	Incremental Charge - Manual Svc Order vs. Electronic-Disc 1st	Incremental Charge - Manual Svc Order vs. Electronic-Disc Add'l
						Rec	Nonrecurring		Nonrecurring Disconnect		OSS Rates($)					
							First	Add'l	First	Add'l	SOMEC	SOMAN	SOMAN	SOMAN	SOMAN	SOMAN
	EXTENDED 4-WIRE DS1 DIGITAL EXTENDED LOOP WITH DEDICATED DS1 INTEROFFICE TRANSPORT															
	4-Wire DS1 Digital Loop in Combination - Zone 1		1	UNC1X	USLXX	90.87	253.03	157.89	44.80	11.73						
	4-Wire DS1 Digital Loop in Combination - Zone 2		2	UNC1X	USLXX	155.43	253.03	157.89	44.80	11.73						
	4-Wire DS1 Digital Loop in Combination - Zone 3		3	UNC1X	USLXX	261.89	253.03	157.89	44.80	11.73						
	Interoffice Transport - Dedicated - DS1 combination - Per Mile Per Month			UNC1X	1L5XX	0.27										
	Interoffice Transport - Dedicated - DS1 combination - Facility Termination Per Month			UNC1X	U1TF1	61.71	89.47	81.99	16.39	14.48						
	EXTENDED 4-WIRE DS1 DIGITAL EXTENDED LOOP WITH DEDICATED DS3 INTEROFFICE TRANSPORT															
	First DS1Loop in Combination - Zone 1		1	UNC1X	USLXX	90.87	253.03	157.89	44.80	11.73						
	First DS1Loop in Combination - Zone 2		2	UNC1X	USLXX	155.43	253.03	157.89	44.80	11.73						
	First DS1Loop in Combination - Zone 3		3	UNC1X	USLXX	261.89	253.03	157.89	44.80	11.73						
	Interoffice Transport - Dedicated - DS3 combination - Per Mile Per Month			UNC3X	1L5XX	6.42										
	Interoffice Transport - Dedicated - DS3 - Facility Termination per month			UNC3X	U1TF3	704.52	279.37	163.12	60.33	58.59						
	3/1Channel System in combination per month			UNC3X	MQ3	144.02	178.54	94.18	33.33	31.90						
	DS1 COCI in combination per month			UNC1X	UC1D1	8.64	6.59	4.73	0.00	0.00						
	Additional DS1Loop in DS3 Interoffice Transport Combination - Zone 1		1	UNC1X	USLXX	90.87	253.03	157.89	44.80	11.73						
	Additional DS1Loop in DS3 Interoffice Transport Combination - Zone 2		2	UNC1X	USLXX	155.43	253.03	157.89	44.80	11.73						
	Additional DS1Loop in DS3 Interoffice Transport Combination - Zone 3		3	UNC1X	USLXX	261.89	253.03	157.89	44.80	11.73						
	Additoinal DS1 COCI in combination per month			UNC1X	UC1D1	8.64	6.59	4.73	0.00	0.00						
	EXTENDED 2-WIRE VOICE GRADE EXTENDED LOOP/ 2-WIRE VOICE GRADE INTEROFFICE TRANSPORT															
	2-WireVG Loop in combination - Zone 1		1	UNCVX	UEAL2	16.68	105.98	68.43	53.05	10.61						
	2-WireVG Loop in combination - Zone 2		2	UNCVX	UEAL2	23.13	105.98	68.43	53.05	10.61						
	2-WireVG Loop in combination - Zone 3		3	UNCVX	UEAL2	28.46	105.98	68.43	53.05	10.61						
	Interoffice Transport - 2-wire VG - Dedicated- Per Mile Per Month			UNCVX	1L5XX	0.0134										
	Interoffice Transport - 2-wire VG - Dedicated - Facility Termination per month			UNCVX	U1TV2	19.44	40.63	27.47	16.77	6.91						
	EXTENDED 4-WIRE VOICE GRADE EXTENDED LOOP/ 4 WIRE VOICE GRADE INTEROFFICE TRANSPORT															
	4-WireVG Loop in combination - Zone 1		1	UNCVX	UEAL4	32.59	132.38	94.83	59.35	14.61						
	4-WireVG Loop in combination - Zone 2		2	UNCVX	UEAL4	43.89	132.38	94.83	59.35	14.61						
	4-WireVG Loop in combination - Zone 3		3	UNCVX	UEAL4	43.38	132.38	94.83	59.35	14.61						
	Interoffice Transport - 4-wire VG - Dedicated - Per Mile Per Month			UNCVX	1L5XX	0.0134										
	Interoffice Transport - 4-wire VG - Dedicated - Facility Termination per month			UNCVX	U1TV4	17.03	40.63	27.47	16.77	6.91						
	EXTENDED DS3 DIGITAL EXTENDED LOOP WITH DEDICATED DS3 INTEROFFICE TRANSPORT															
	DS3 Local Loop in combination - per mile per month			UNC3X	1L5ND	12.26										
	DS3 Local Loop in combination - Facility Termination per month			UNC3X	UE3PX	306.36	452.52	264.53	119.75	83.77						
	Interoffice Transport - Dedicated - DS3 - Per Mile per month			UNC3X	1L5XX	6.42										
	Interoffice Transport - Dedicated - DS3 combination - Facility Termination per month			UNC3X	U1TF3	704.52	279.37	163.12	60.33	58.59						
	EXTENDED STS-1 DIGITAL EXTENDED LOOP WITH DEDICATED STS-1 INTEROFFICE TRANSPORT															
	STS-1 Local Lolp in combination - per mile per month			UNCSX	1L5ND	12.26										
	STS-1 Local Loop in combination - Facility Termination per month			UNCSX	UDLS1	313.49	452.52	264.53	119.75	83.77						
	Interoffice Transport - Dedicated - STS-1 combination - per mile per month			UNCSX	1L5XX	6.42										
	Interoffice Transport - Dedicated - STS-1 combination - Facility Termination per month			UNCSX	U1TFS	704.44	279.37	163.12	60.33	58.59						
	EXTENDED 2-WIRE ISDN EXTENDED LOOP WITH DS1 INTEROFFICE TRANSPORT															
	First 2-Wire ISDN Loop in Combination - Zone 1		1	UNCNX	U1L2X	25.21	117.58	80.03	53.05	10.61						
	First 2-Wire ISDN Loop in Combination - Zone 2		2	UNCNX	U1L2X	32.76	117.58	80.03	53.05	10.61						

CATEGORY	RATE ELEMENTS	Interim	Zone	BCS	USOC	RATES($)					Svc Order Submitted Elec per LSR	Svc Order Submitted Manually per LSR	Incremental Charge - Manual Svc Order vs. Electronic-1st	Incremental Charge - Manual Svc Order vs. Electronic-Add'l	Incremental Charge - Manual Svc Order vs. Electronic-Disc 1st	Incremental Charge - Manual Svc Order vs. Electronic-Disc Add'l
						Rec	Nonrecurring		Nonrecurring Disconnect		OSS Rates($)					
							First	Add'l	First	Add'l	SOMEC	SOMAN	SOMAN	SOMAN	SOMAN	SOMAN
	First 2-Wire ISDN Loop in Combination - Zone 3		3	UNCNX	U1L2X	37.70	117.58	80.03	53.05	10.61						
	Interoffice Transport - Dedicated - DS1 combination - per mile per month			UNC1X	1L5XX	0.27										
	Interoffice Transport - Dedicated - DS1 combination - Facility Termination per month			UNC1X	U1TF1	61.71	89.47	81.99	16.39	14.48						
	1/0 Channel System in combination - per month			UNC1X	MQ1	107.57	91.24	62.71	10.56	9.81						
	2-wire ISDN COCI (BRITE) - in combination - per month			UNCNX	UC1CA	2.56	6.59	4.73	0.00	0.00						
	Additional 2-wire ISDN Loop in same DS1Interoffice Transport Combination - Zone 1		1	UNCNX	U1L2X	25.21	117.58	80.03	53.05	10.61						
	Additional 2-wire ISDN Loop in same DS1Interoffice Transport Combination - Zone 2		2	UNCNX	U1L2X	32.76	117.58	80.03	53.05	10.61						
	Additional 2-wire ISDN Loop in same DS1Interoffice Transport Combination - Zone 3		3	UNCNX	U1L2X	37.70	117.58	80.03	53.05	10.61						
	Additional 2-wire ISDN COCI (BRITE) - in combination- per month			UNCNX	UC1CA	2.56	6.59	4.73	0.00	0.00						
	EXTENDED 4-WIRE DS1 DIGITAL EXTENDED LOOP WITH DEDICATED STS-1 INTEROFFICE TRANSPORT															
	First DS1 Loop Combination - Zone 1		1	UNC1X	USLXX	90.87	253.03	157.89	44.80	11.73						
	First DS1 Loop Combination - Zone 2		2	UNC1X	USLXX	155.43	253.03	157.89	44.80	11.73						
	First DS1 Loop Combination - Zone 3		3	UNC1X	USLXX	261.89	253.03	157.89	44.80	11.73						
	Interoffice Transport - Dedicated - STS-1 combination - Per Mile Per Month			UNCSX	1L5XX	6.42										
	Interoffice Transport - Dedicated - STS-1 combination - Facility Termination per month			UNCSX	U1TFS	704.44	279.37	163.12	60.33	58.59						
	3/1 Channel System in combination per month			UNCSX	MQ3	144.02	178.54	94.18	33.33	31.90						
	DS1 COCI in combination per month			UNC1X	UC1D1	8.64	6.59	4.73	0.00	0.00						
	Additional DS1Loop in the same STS-1 Interoffice Transport Combination - Zone 1		1	UNC1X	USLXX	90.87	253.03	157.89	44.80	11.73						
	Additional DS1Loop in the same STS-1 Interoffice Transport Combination - Zone 2		2	UNC1X	USLXX	155.43	253.03	157.89	44.80	11.73						
	Additional DS1Loop in the same STS-1 Interoffice Transport Combination - Zone 3		3	UNC1X	USLXX	261.89	253.03	157.89	44.80	11.73						
	DS1 COCI in combination per month			UNC1X	UC1D1	8.64	6.59	4.73	0.00	0.00						
	EXTENDED 4-WIRE 56 KBPS DIGITAL EXTENDED LOOP WITH 56 KBPS INTEROFFICE TRANSPORT															
	4-wire 56 kbps Local Loop in combination - Zone 1		1	UNCDX	UDL56	29.93	126.66	89.12	59.35	14.61						
	4-wire 56 kbps Local Loop in combination - Zone 2		2	UNCDX	UDL56	33.99	126.66	89.12	59.35	14.61						
	4-wire 56 kbps Local Loop in combination - Zone 3		3	UNCDX	UDL56	34.74	126.66	89.12	59.35	14.61						
	Interoffice Transport - Dedicated - 4-wire 56 kbps combination - Per Mile per month			UNCDX	1L5XX	0.0134										
	Interoffice Transport - Dedicated - 4-wire 56 kbps combination - Facility Termination per month			UNCDX	U1TD5	13.41	40.63	27.47	16.77	6.91						
	EXTENDED 4-WIRE 64 KBPS DIGITAL EXTENDED LOOP WITH 64 KBPS INTEROFFICE TRANSPORT															
	4-wire 64 kbps Lcoal Loop in Combination - Zone 1		1	UNCDX	UDL64	29.93	126.66	89.12	59.35	14.61						
	4-wire 64 kbps Lcoal Loop in Combination - Zone 2		2	UNCDX	UDL64	33.99	126.66	89.12	59.35	14.61						
	4-wire 64 kbps Lcoal Loop in Combination - Zone 3		3	UNCDX	UDL64	34.74	126.66	89.12	59.35	14.61						
	Interoffice Transport - Dedicated - 4-wire 64 kbps combination - Per Mile per month			UNCDX	1L5XX	0.0134										
	Interoffice Transport - Dedicated - 4-wire 64 kbps combination - Facility Termination per month			UNCDX	U1TD6	13.41	40.63	27.47	16.77	6.91						
	EXTENDED 2-WIRE VOICE GRADE LOOP WITH DS1 INTEROFFICE TRANSPORT w/ 3/1 MUX															
	First 2-wire VG Loop (SL2) in Combination - Zone 1		1	UNCVX	UEAL2	16.68	105.98	68.43	53.05	10.61						
	First 2-wire VG Loop (SL2) in Combination - Zone 2		2	UNCVX	UEAL2	23.13	105.98	68.43	53.05	10.61						
	First 2-wire VG Loop (SL2) in Combination - Zone 3		3	UNCVX	UEAL2	28.46	105.98	68.43	53.05	10.61						
	First Interoffice Transport - Dedicated - DS1 combination - Per Mile			UNC1X	1L5XX	0.27										
	First Interoffice Transport - Dedicated - DS1 combination - Facility Termination per month			UNC1X	U1TF1	61.71	89.47	81.99	16.39	14.48						
	Per each DS1 Channelization System Per Month			UNC1X	MQ1	107.57	91.24	62.71	10.56	9.81						
	Per each Voice Grade COCI - Per Month per month			UNCVX	1D1VG	0.56	6.59	4.73	0.00	0.00						
	3/1 Channel System in combination per month			UNC3X	MQ3	144.02	178.54	94.18	33.33	31.90						

CATEGORY	RATE ELEMENTS	Interim	Zone	BCS	USOC	RATES($)					Svc Order Submitted Elec per LSR	Svc Order Submitted Manually per LSR	Incremental Charge - Manual Svc Order vs. Electronic-1st	Incremental Charge - Manual Svc Order vs. Electronic-Add'l	Incremental Charge - Manual Svc Order vs. Electronic-Disc 1st	Incremental Charge - Manual Svc Order vs. Electronic-Disc Add'l
						Rec	Nonrecurring		Nonrecurring Disconnect		OSS Rates($)					
							First	Add'l	First	Add'l	SOMEC	SOMAN	SOMAN	SOMAN	SOMAN	SOMAN
	Per each DS1 COCI in combination per month			UNC1X	UC1D1	8.64	6.59	4.73	0.00	0.00						
	Each Additional 2-Wire VG Loop(SL 2) in the same DS1 Interoffice Transport Combination - Zone 1		1	UNCVX	UEAL2	16.68	105.98	68.43	53.05	10.61						
	Each Additional 2-Wire VG Loop(SL2) in the same DS1 Interoffice Transport Combination - Zone 2		2	UNCVX	UEAL2	23.13	105.98	68.43	53.05	10.61						
	Each Additional 2-Wire VG Loop(SL2) in the same DS1 Interoffice Transport Combination - Zone 3		3	UNCVX	UEAL2	28.46	105.98	68.43	53.05	10.61						
	Each Additional Voice Grade COCI in combination - per month			UNCVX	1D1VG	0.56	6.59	4.73	0.00	0.00						
	Each Additional DS1 Interoffice Channel per mile in same 3/1 Channel System per month			UNC1X	1L5XX	0.27										
	Each Additional DS1 Interoffice Channel Facility Termination in same 3/1 Channel System per month			UNC1X	U1TF1	61.71	89.47	81.99	16.39	14.48						
	Each Additional DS1 COCI combination per month			UNC1X	UC1D1	8.64	6.59	4.73	0.00	0.00						
	EXTENDED 4-WIRE 56 KBPS DIGITAL LOOP WITH DEDICATED DS1 INTEROFFICE TRANSPORT w/ 3/1 MUX															
	First 4-Wire Analog Voice Grade Local Loop in Combination - Zone 1		1	UNCVX	UEAL4	32.59	132.38	94.83	59.35	14.61						
	First 4-Wire Analog Voice Grade Local Loop in Combination - Zone 2		2	UNCVX	UEAL4	43.89	132.38	94.83	59.35	14.61						
	First 4-Wire Analog Voice Grade Local Loop in Combination - Zone 3		3	UNCVX	UEAL4	43.38	132.38	94.83	59.35	14.61						
	First Interoffice Transport - Dedicated - DS1 combination - Per Mile Per Month			UNC1X	1L5XX	0.27										
	First Interoffice Transport - Dedicated - DS1 - Facility Termination Per Month			UNC1X	U1TF1	61.71	89.47	81.99	16.39	14.48						
	Per each 1/0 Channel System in combination Per Month			UNC1X	MQ1	107.57	91.24	62.71	10.56	9.81						
	Per each Voice Grade COCI in combination - per month			UNCVX	1D1VG	0.56	6.59	4.73	0.00	0.00						
	3/1 Channel System in combination per month			UNC3X	MQ3	144.02	178.54	94.18	33.33	31.90						
	Per each DS1 COCI in combination per month			UNC1X	UC1D1	8.64	6.59	4.73	0.00	0.00						
	Additional 4-Wire Analog Voice Grade Loop in same DS1 Interoffice Transport Combination - Zone 1		1	UNCVX	UEAL4	32.59	132.38	94.83	59.35	14.61						
	Additional 4-Wire Analog Voice Grade Loop in same DS1 Interoffice Transport Combination - Zone 2		2	UNCVX	UEAL4	43.89	132.38	94.83	59.35	14.61						
	Additional 4-Wire Analog Voice Grade Loop in same DS1 Interoffice Transport Combination - Zone 3		3	UNCVX	UEAL4	43.38	132.38	94.83	59.35	14.61						
	Each Additional DS1 Interoffice Channel per mile in same 3/1 Channel System per month			UNC1X	1L5XX	0.27										
	Each Additional DS1 Interoffice Channel Facility Termination in same 3/1 Channel System per month			UNC1X	U1TF1	61.71	89.47	81.99	16.39	14.48						
	Additional Voice Grade COCI - in combination - per month			UNCVX	1D1VG	0.56	6.59	4.73	0.00	0.00						
	EXTENDED 4-WIRE 56 KBPS DIGITAL LOOP WITH DEDICATED DS1 INTEROFFICE TRANSPORT w/ 3/1 MUX															
	First 4-Wire 56Kbps Digital Grade Local Loop in Combination - Zone 1		1	UNCDX	UDL56	29.93	126.66	89.12	59.35	14.61						
	First 4-Wire 56Kbps Digital Grade Local Loop in Combination - Zone 2		2	UNCDX	UDL56	33.99	126.66	89.12	59.35	14.61						
	First 4-Wire 56Kbps Digital Grade Local Loop in Combination - Zone 3		3	UNCDX	UDL56	34.74	126.66	89.12	59.35	14.61						
	First Interoffice Transport - Dedicated - DS1 combination - Per Mile Per Month			UNC1X	1L5XX	0.27										
	First Interoffice Transport - Dedicated - DS1 - combination Facility Termination Per Month			UNC1X	U1TF1	61.71	89.47	81.99	16.39	14.48						
	Per each 1/0 Channel System in combination Per Month			UNC1X	MQ1	107.57	91.24	62.71	10.56	9.81						
	Per each OCU-DP COCI (data) COCI per month (2.4-64kbs)			UNCDX	1D1DD	1.19	6.59	4.73	0.00	0.00						
	3/1 Channel System in combination per month			UNC3X	MQ3	144.02	178.54	94.18	33.33	31.90						
	Per each DS1 COCI in combination per month			UNC1X	UC1D1	8.64	6.59	4.73	0.00	0.00						
	Additional 4-Wire 56Kbps Digital Grade Loop in same DS1 Interoffice Transport Combination - Zone 1		1	UNCDX	UDL56	29.93	126.66	89.12	59.35	14.61						
	Additional 4-Wire 56Kbps Digital Grade Loop in same DS1 Interoffice Transport Combination - Zone 2		2	UNCDX	UDL56	33.99	126.66	89.12	59.35	14.61						

CATEGORY		RATE ELEMENTS	Interim	Zone	BCS	USOC	RATES($)					Svc Order Submitted Elec per LSR	Svc Order Submitted Manually per LSR	Incremental Charge - Manual Svc Order vs. Electronic-1st	Incremental Charge - Manual Svc Order vs. Electronic-Add'l	Incremental Charge - Manual Svc Order vs. Electronic-Disc 1st	Incremental Charge - Manual Svc Order vs. Electronic-Disc Add'l
							Rec	Nonrecurring		Nonrecurring Disconnect		OSS Rates($)					
								First	Add'l	First	Add'l	SOMEC	SOMAN	SOMAN	SOMAN	SOMAN	SOMAN
		Additional 4-Wire 56Kbps Digital Grade Loop in same DS1 Interoffice Transport Combination - Zone 3		3	UNCDX	UDL56	34.74	126.66	89.12	59.35	14.61						
		OCU-DP COCI (data) COCI in combination per month (2.4-64kbs)			UNCDX	1D1DD	1.19	6.59	4.73	0.00	0.00						
		Each Additional DS1 Interoffice Channel per mile in same 3/1 Channel System per month			UNC1X	1L5XX	0.27										
		Each Additional DS1 Interoffice Channel Facility Termination in same 3/1 Channel System per month			UNC1X	U1TF1	61.71	89.47	81.99	16.39	14.48						
		Each Additional DS1 COCI in the same 3/1 channel system combination per month			UNC1X	UC1D1	8.64	6.59	4.73	0.00	0.00						
	EXTENDED 4-WIRE 64 KBPS DIGITAL LOOP WITH DEDICATED DS1 INTEROFFICE TRANSPORT w/ 3/1 MUX																
		First 4-Wire 64Kbps Digital Grade Loop in a DS1 Interoffice Transport Combination - Zone 1		1	UNCDX	UDL64	29.93	126.66	89.12	59.35	14.61						
		First 4-Wire 64Kbps Digital Grade Loop in a DS1 Interoffice Transport Combination - Zone 2		2	UNCDX	UDL64	33.99	126.66	89.12	59.35	14.61						
		First 4-Wire 64Kbps Digital Grade Loop in a DS1 Interoffice Transport Combination - Zone 3		3	UNCDX	UDL64	34.74	126.66	89.12	59.35	14.61						
		First Interoffice Transport - Dedicated - DS1 combination - Per Mile Per Month			UNC1X	1L5XX	0.27										
		First Interoffice Transport - Dedicated - DS1 combination - Facility Termination Per Month			UNC1X	U1TF1	61.71	89.47	81.99	16.39	14.48						
		Per each Channel System 1/0 in combination Per Month			UNC1X	MQ1	107.57	91.24	62.71	10.56	9.81						
		Per each OCU-DP COCI (data) in combination - per month (2.4-64kbs)			UNCDX	1D1DD	1.19	6.59	4.73	0.00	0.00						
		3/1 Channel System in combination per month			UNC3X	MQ3	144.02	178.54	94.18	33.33	31.90						
		Per each DS1 COCI in combination per month			UNC1X	UC1D1	8.64	6.59	4.73	0.00	0.00						
		Additional 4-Wire 64Kbps Digital Grade Loop in same DS1 Interoffice Transport Combination - Zone 1		1	UNCDX	UDL64	29.93	126.66	89.12	59.35	14.61						
		Additional 4-Wire 64Kbps Digital Grade Loop in same DS1 Interoffice Transport Combination - Zone 2		2	UNCDX	UDL64	33.99	126.66	89.12	59.35	14.61						
		Additional 4-Wire 64Kbps Digital Grade Loop in same DS1 Interoffice Transport Combination - Zone 3		3	UNCDX	UDL64	34.74	126.66	89.12	59.35	14.61						
		Additional OCU-DP COCI (data) - DS1 to DS0 Channel System combination - per month (2.4-64kbs)			UNCDX	1D1DD	1.19	6.59	4.73	0.00	0.00						
		Each Additional DS1 Interoffice Channel per mile in same 3/1 Channel System per month			UNC1X	1L5XX	0.27										
		Each Additional DS1 Interoffice Channel Facility Termination in same 3/1 Channel System per month			UNC1X	U1TF1	61.71	89.47	81.99	16.39	14.48						
		Each Additional DS1 COCI in the same 3/1 channel system combination per month			UNC1X	UC1D1	8.64	6.59	4.73	0.00	0.00						
		First 2-Wire ISDN Loop in a DS1 Interoffice Combination Transport - Zone 1		1	UNCNX	U1L2X	25.21	117.58	80.03	53.05	10.61						
		First 2-Wire ISDN Loop in a DS1 Interoffice Combination Transport - Zone 2		2	UNCNX	U1L2X	32.76	117.58	80.03	53.05	10.61						
		First 2-Wire ISDN Loop in a DS1 Interoffice Combination Transport - Zone 3		3	UNCNX	U1L2X	37.70	117.58	80.03	53.05	10.61						
		First Interoffice Transport - Dedicated - DS1 combination - Per Mile per month			UNC1X	1L5XX	0.27										
		First Interoffice Transport - Dedicated - DS1 combination - Facility Termination per month			UNC1X	U1TF1	61.71	89.47	81.99	16.39	14.48						
		Per each Channel System 1/0 in combination - per month			UNC1X	MQ1	107.57	91.24	62.71	10.56	9.81						
		Per each 2-wire ISDN COCI (BRITE) in combination - per month			UNCNX	UC1CA	2.56	6.59	4.73	0.00	0.00						
		3/1 Channel System in combination per month			UNC3X	MQ3	144.02	178.54	94.18	33.33	31.90						
		Per each DS1 COCI in combination per month			UNC1X	UC1D1	8.64	6.59	4.73	0.00	0.00						
		Additional 2-wire ISDN Loop in same DS1Interoffice Transport Combination - Zone 1		1	UNCNX	U1L2X	25.21	117.58	80.03	53.05	10.61						
		Additional 2-wire ISDN Loop in same DS1Interoffice Transport Combination - Zone 2		2	UNCNX	U1L2X	32.76	117.58	80.03	53.05	10.61						

UNBUNDLED NETWORK ELEMENTS - South Carolina

Attachment: 2 Exh. A

CATEGORY	RATE ELEMENTS	Interim	Zone	BCS	USOC	RATES($) Rec	Nonrecurring First	Nonrecurring Add'l	Nonrecurring Disconnect First	Nonrecurring Disconnect Add'l	Svc Order Submitted Elec per LSR	Svc Order Submitted Manually per LSR	Incremental Charge - Manual Svc Order vs. Electronic-1st	Incremental Charge - Manual Svc Order vs. Electronic-Add'l	Incremental Charge - Manual Svc Order vs. Electronic-Disc 1st	Incremental Charge - Manual Svc Order vs. Electronic-Disc Add'l
											OSS Rates($)					
											SOMEC	SOMAN	SOMAN	SOMAN	SOMAN	SOMAN
	Additional 2-wire ISDN Loop in same DS1Interoffice Transport Combination - Zone 3		3	UNCNX	U1L2X	37.70	117.58	80.03	53.05	10.61						
	Additional 2-wire ISDN COCI (BRITE) in same 1/0 channel system combination- per month			UNCNX	UC1CA	2.56	6.59	4.73	0.00	0.00						
	Each Additional DS1 Interoffice Channel per mile in same 3/1 Channel System per month			UNC1X	1L5XX	0.27										
	Each Additional DS1 Interoffice Channel Facility Termination in same 3/1 Channel System per month			UNC1X	U1TF1	61.71	89.47	81.99	16.39	14.48						
	Each Additional DS1 COCI in the same 3/1 channel system combination per month			UNC1X	UC1D1	8.64	6.59	4.73	0.00	0.00						
EXTENDED 4-WIRE DS1 LOOP WITH DEDICATED DS1 INTEROFFICE TRANSPORT w/ 3/1 MUX																
	First 4-wire DS1 Digital Lcoal Loop in Combination - Zone 1		1	UNC1X	USLXX	90.87	253.03	157.89	44.80	11.73						
	First 4-wire DS1 Digital Lcoal Loop in Combination - Zone 2		2	UNC1X	USLXX	155.43	253.03	157.89	44.80	11.73						
	First 4-wire DS1 Digital Lcoal Loop in Combination - Zone 3		3	UNC1X	USLXX	261.89	253.03	157.89	44.80	11.73						
	First Interoffice Transport - Dedicated - DS1 combination - Per Mile Per Month			UNC1X	1L5XX	0.27										
	First Interoffice Transport - Dedicated - DS1 combination - Facility Termination Per Month			UNC1X	U1TF1	61.71	89.47	81.99	16.39	14.48						
	3/1 Channel System in combination per month			UNC3X	MQ3	144.02	178.54	94.18	33.33	31.90						
	Per each DS1 COCI combination per month			UNC1X	UC1D1	8.64	6.59	4.73	0.00	0.00						
	Each Additional DS1 Interoffice Channel per mile in same 3/1 Channel System per month			UNC1X	1L5XX	0.27										
	Each Additional DS1 Interoffice Channel Facility Termination in same 3/1 Channel System per month			UNC1X	U1TF1	61.71	89.47	81.99	16.39	14.48						
	Each Additional DS1 COCI in the same 3/1 channel system combination per month			UNC1X	UC1D1	8.64	6.59	4.73	0.00	0.00						
	Additional 4-Wire DS1 Digital Local Loop in Combination - Zone 1		1	UNC1X	USLXX	90.87	253.03	157.89	44.80	11.73						
	Additional 4-Wire DS1 Digital Local Loop in Combination - Zone 2		2	UNC1X	USLXX	155.43	253.03	157.89	44.80	11.73						
	Additional 4-Wire DS1 Digital Local Loop in Combination - Zone 3		3	UNC1X	USLXX	261.89	253.03	157.89	44.80	11.73						
EXTENDED 4-WIRE 56 KBPS DIGITAL EXTENDED LOOP WITH DS0 INTEROFFICE TRANSPORT																
	First 4-wire 56 kbps Local Loop in combination - Zone 1		1	UNCDX	UDL56	29.93	126.66	89.12	59.35	14.61						
	First 4-wire 56 kbps Local Loop in combination - Zone 2		2	UNCDX	UDL56	33.99	126.66	89.12	59.35	14.61						
	First 4-wire 56 kbps Local Loop in combination - Zone 3		3	UNCDX	UDL56	34.74	126.66	89.12	59.35	14.61						
	First 4-wiree 56 kbps Interoffice Transport - Dedicated - Per Mile per month			UNCDX	1L5XX	0.0134										
	First 4-wire 56 kbps Interoffice Transport - Dedicated - Facility Termination per month			UNCDX	U1TD5	13.41	40.63	27.47	16.77	6.91						
EXTENDED 4-WIRE 64 KBPS DIGITAL EXTENDED LOOP WITH DS0 INTEROFFICE TRANSPORT																
	First 4-wire 64 kbps Local Loop in combination - Zone 1		1	UNCDX	UDL64	29.93	126.66	89.12	59.35	14.61						
	First 4-wire 64 kbps Local Loop in combination - Zone 2		2	UNCDX	UDL64	33.99	126.66	89.12	59.35	14.61						
	First 4-wire 64 kbps Local Loop in combination - Zone 3		3	UNCDX	UDL64	34.74	126.66	89.12	59.35	14.61						
	First I4-wire 65 kbps Interoffice Transport - Dedicated - Per Mile per month			UNCDX	1L5XX	0.0134										
	First 4-wire 64 kbps Interoffice Transport - Dedicated - Facility Termination per month			UNCDX	U1TD6	13.41	40.63	27.47	16.77	6.91						
ADDITIONAL NETWORK ELEMENTS																
When used as a part of a currently combined facility, the non-recurrng charges do not apply, but a Switch As Is charge does apply.																
When used as ordinarily combined network elements in All States, the non-recurring charges apply and the Switch As Is Charge does not.																
Nonrecurring Currently Combined Network Elements "Switch As Is" Charge																
Optional Features & Functions:																
	Clear Channel Capability Extended Frame Option - per DS1	N		U1TD1, ULDD1,UNC1X	CCOEF		0.00	0.00	0.00	0.00						
	Clear Channel Capability Super FrameOption - per DS1	N		U1TD1, ULDD1,UNC1X	CCOSF		0.00	0.00	0.00	0.00						
	Clear Channel Capability (SF/ESF) Option - Subsequent Activity - per DS1	N		ULDD1, U1TD1, UNC1X, USL	NRCCC		185.26	23.86	1.99	0.78						

CATEGORY	RATE ELEMENTS	Interim	Zone	BCS	USOC	RATES($)					Svc Order Submitted Elec per LSR	Svc Order Submitted Manually per LSR	Incremental Charge - Manual Svc Order vs. Electronic-1st	Incremental Charge - Manual Svc Order vs. Electronic-Add'l	Incremental Charge - Manual Svc Order vs. Electronic-Disc 1st	Incremental Charge - Manual Svc Order vs. Electronic-Disc Add'l
						Rec	Nonrecurring		Nonrecurring Disconnect		OSS Rates($)					
							First	Add'l	First	Add'l	SOMEC	SOMAN	SOMAN	SOMAN	SOMAN	SOMAN
	C-bit Parity Option - Subsequent Activity - per DS3	N		U1TD3, ULDD3, UE3, UNC3X	NRCC3		219.58	7.69	0.737	0.00						
	Wholesale to UNE, Switch-As-Is Conversion Charge			UNCVX, UNCDX, UNC1X, UNC3X, UNCSX	UNCCC		5.61	5.61	7.00	7.00						
	Unbundled Misc Rate Element, SNE SAI, Single Network Element - Switch As Is Non-recurring Charge, per circuit (LSR)			U1TVX, U1TDX, U1TD1, U1TD3, U1TS1, UDF, UE3	URESL		40.27	13.52								
	Unbundled Misc Rate Element, SNE SAI, Single Network Element - Switch As Is Non-recurring Charge, per circuit (Spreadsheet)			U1TVX, U1TDX, U1TD1, U1TD3, U1TS1, UDF, UE3	URESP		23.8	12.11								
MULTIPLEXER Interfaces																
	DS1 to DS0 Channel System per month			UNC1X	MQ1	107.57	91.24	62.71	10.56	9.81						
	OCU-DP COCI (data) - DS1 to DS0 Channel System - per month (2.4-64kbs) used for a Local Loop			UDL	1D1DD	1.19	6.59	4.73								
	OCU-DP COCI (data) - DS1 to DS0 Channel System - per month (2.4-64kbs) used for connection to a channelized DS1 Local Channel in the same SWC as collocation			U1TUD	1D1DD	1.19	6.59	4.73								
	2-wire ISDN COCI (BRITE) - DS1 to DS0 Channel System - per month for a Local Loop			UDN	UC1CA	2.56	6.59	4.73								
	2-wire ISDN COCI (BRITE) - DS1 to DS0 Channel System - per month used for connection to a channelized DS1 Local Channel in the same SWC as collocation			U1TUB	UC1CA	2.56	6.59	4.73								
	Voice Grade COCI - DS1 to DS0 Channel System - per month used for a Local Loop			UEA	1D1VG	0.56	6.59	4.73								
	Voice Grade COCI - DS1 to DS0 Channel System - per month used for connection to a channelized DS1 Local Channel in the same SWC as collocation			U1TUC	1D1VG	0.56	6.59	4.73								
	DS3 to DS1 Channel System per month			UNC3X, UNCSX	MQ3	144.02	178.54	94.18	33.33	31.90						
	DS1 COCI used with Loop per month			USL	UC1D1	8.64	6.59	4.73								
	DS1 COCI (used for connection to a channelized DS1 Local Channel in the same SWC as collocation) per month			U1TUA	UC1D1	8.64	6.59	4.73								
	DS1 COCI used with Interoffice Channel per month			U1TD1	UC1D1	8.64	6.59	4.73								
	DS3 Interface Unit (DS1 COCI) used with Local Channel per month			ULDD1	UC1D1	8.64	6.59	4.73								
Access to DCS - Customer Reconfiguration (FlexServ)																
	Customer Reconfiguration Establishment						1.48		1.85							
	DS1 DSC Termination with DS0 Switching					27.96	25.60	19.70	16.67	13.41						
	DS1 DSC Termination with DS1 Switching					12.67	18.51	12.61	12.24	8.98						
	DS3 DSC Termination with DS1 Switching					176.51	25.60	19.70	16.67	13.41						
Service Rearrangements																
	NRC - Change in Facility Assignment per circuit Service Rearrangement	N		U1TVX, U1TDX, UEA, UDL, U1TUC, U1TUD, U1TUB, ULDVX, ULDDX, UNCVX, UNCDX	URETD		101.30	43.13								
	NRC - Change in Facility Assignment per circuit Project Management (added to CFA per circuit if project managed)	N		U1TVX, U1TDX, UEA, UDL, U1TUC, U1TUD, U1TUB, ULDVX, ULDDX, UNCVX, UNCDX	URETB		3.66	3.66								
	NRC - Transfer of Ownership per circuit Service Rearrangement (1-14 circuits)			U1TVX, U1TDX, UEA, UDL, U1TUC, U1TUD, U1TUB, ULDVX, ULDDX, UNCVX, UNCDX	URETE		0.00	0.00								

UNBUNDLED NETWORK ELEMENTS - South Carolina														Attachment: 2 Exh. A			
CATEGORY		RATE ELEMENTS	Interim	Zone	BCS	USOC	RATES($)					Svc Order Submitted Elec per LSR	Svc Order Submitted Manually per LSR	Incremental Charge - Manual Svc Order vs. Electronic-1st	Incremental Charge - Manual Svc Order vs. Electronic-Add'l	Incremental Charge - Manual Svc Order vs. Electronic-Disc 1st	Incremental Charge - Manual Svc Order vs. Electronic-Disc Add'l
							Rec	Nonrecurring		Nonrecurring Disconnect		OSS Rates($)					
								First	Add'l	First	Add'l	SOMEC	SOMAN	SOMAN	SOMAN	SOMAN	SOMAN
		NRC - Transfer of Ownership per circuit Project Management (15 + circuits)			U1TVX, U1TDX, UEA, UDL, U1TUC, U1TUD, U1TUB, ULDVX, ULDDX, UNCVX, UNCDX	URETC		0.00	0.00								
		Commingling Authorization			UNCVX, UNCDX, UNC1X, UNC3X, UNCSX, U1TD1, U1TD3, U1TS1, UE3, UDLSX, U1TVX, U1TDX, U1TUB	CMGAU	0.00	0.00	0.00	0.00	0.00						
	Miscellaneous																
		NRC - Order Coordination Specific Time - Dedicated Transport	N		UNC1X	OCOSR		18.90	18.90								
		NOTE: Rates displaying an "N" in the interim column are agreed to by the Parties until such time as modified by Commission order and are not subject to true-up.															
		NOTE: Rates displaying an "I" in the interim column are interim as a result of a Commission order.															

UNBUNDLED NETWORK ELEMENTS - South Carolina

Attachment: 2 Exh. B

CATEGORY	RATE ELEMENTS	Interim	Zone	BCS	USOC	RATES ($)					Svc Order Submitted Elec per LSR	Svc Order Submitted Manually per LSR	Incremental Charge - Manual Svc Order vs. Electronic-1st	Incremental Charge - Manual Svc Order vs. Electronic-Add'l	Incremental Charge - Manual Svc Order vs. Electronic-Disc 1st	Incremental Charge - Manual Svc Order vs. Electronic-Disc Add'l
						Rec	Nonrecurring		Nonrecurring Disconnect		OSS Rates ($)					
							First	Add'l	First	Add'l	SOMEC	SOMAN	SOMAN	SOMAN	SOMAN	SOMAN
UNBUNDLED EXCHANGE ACCESS LOOP																
2-WIRE HIGH BIT RATE DIGITAL SUBSCRIBER LINE (HDSL) COMPATIBLE LOOP																
	2 Wire Unbundled HDSL Loop including manual service inquiry & facility reservation - Zone 1		1	UHL	UHL2X	11.02										
	2 Wire Unbundled HDSL Loop including manual service inquiry & facility reservation - Zone 2		2	UHL	UHL2X	12.56										
	2 Wire Unbundled HDSL Loop including manual service inquiry & facility reservation - Zone 3		3	UHL	UHL2X	13.11										
	2 Wire Unbundled HDSL Loop without manual service inquiry and facility reservation - Zone 1		1	UHL	UHL2W	11.02										
	2 Wire Unbundled HDSL Loop without manual service inquiry and facility reservation - Zone 2		2	UHL	UHL2W	12.56										
	2 Wire Unbundled HDSL Loop without manual service inquiry and facility reservation - Zone 3		3	UHL	UHL2W	13.11										
4-WIRE HIGH BIT RATE DIGITAL SUBSCRIBER LINE (HDSL) COMPATIBLE LOOP																
	4 Wire Unbundled HDSL Loop including manual service inquiry and facility reservation - Zone 1		1	UHL	UHL4X	18.42										
	4-Wire Unbundled HDSL Loop including manual service inquiry and facility reservation - Zone 2		2	UHL	UHL4X	16.48										
	4-Wire Unbundled HDSL Loop including manual service inquiry and facility reservation - Zone 3		3	UHL	UHL4X	19.37										
	4-Wire Unbundled HDSL Loop without manual service inquiry and facility reservation - Zone 1		1	UHL	UHL4W	18.42										
	4-Wire Unbundled HDSL Loop without manual service inquiry and facility reservation - Zone 2		2	UHL	UHL4W	16.48										
	4-Wire Unbundled HDSL Loop without manual service inquiry and facility reservation - Zone 3		3	UHL	UHL4W	19.37										
4-WIRE DS1 DIGITAL LOOP																
	4-Wire DS1 Digital Loop - Zone 1		1	USL	USLXX	91.44										
	4-Wire DS1 Digital Loop - Zone 2		2	USL	USLXX	156.40										
	4-Wire DS1 Digital Loop - Zone 3		3	USL	USLXX	263.52										
UNBUNDLED DARK FIBER																
	Dark Fiber, Per Four Fiber Strands, Per Route Mile Or Fraction Thereof - Interoffice Transport			UDF, UDFCX	1L5DF	41.87										
HIGH CAPACITY UNBUNDLED LOCAL LOOP																
	High Capacity Unbundled Local Loop - DS3 - Per Mile per month			UE3	1L5ND	14.10										
	High Capacity Unbundled Local Loop - DS3 - Facility Termination per month			UE3	UE3PX	352.31										
	High Capacity Unbundled Local Loop - STS-1 - Per Mile per month			UDLSX	1L5ND	14.10										
	High Capacity Unbundled Local Loop - STS-1 - Facility Termination per month			UDLSX	UDLS1	360.51										
UNBUNDLED DEDICATED TRANSPORT																
INTEROFFICE CHANNEL - DEDICATED TRANSPORT																
	Interoffice Channel - Dedicated Channel - DS1 - Per Mile per month			U1TD1	1L5XX	0.39										
	Interoffice Channel - Dedicated Tranport - DS1 - Facility Termination			U1TD1	U1TF1	88.71										
	Interoffice Channel - Dedicated Transport - DS3 - Per Mile per month			U1TD3	1L5XX	9.22										
	Interoffice Channel - Dedicated Transport - DS3 - Facility Termination per month			U1TD3	U1TF3	1012.75										
	Interoffice Channel - Dedicated Transport - STS-1 - Per Mile per month			U1TS1	1L5XX	9.22										
	Interoffice Channel - Dedicated Transport - STS-1 - Facility Termination			U1TS1	U1TFS	1012.63										
ENHANCED EXTENDED LINK (EELs)																

UNBUNDLED NETWORK ELEMENTS - South Carolina														Attachment: 2 Exh. B			
CATEGORY	RATE ELEMENTS	Interim	Zone	BCS	USOC	RATES ($)					Svc Order Submitted Elec per LSR	Svc Order Submitted Manually per LSR	Incremental Charge - Manual Svc Order vs. Electronic-1st	Incremental Charge - Manual Svc Order vs. Electronic-Add'l	Incremental Charge - Manual Svc Order vs. Electronic-Disc 1st	Incremental Charge - Manual Svc Order vs. Electronic-Disc Add'l
						Rec	Nonrecurring		Nonrecurring Disconnect		OSS Rates ($)					
							First	Add'l	First	Add'l	SOMEC	SOMAN	SOMAN	SOMAN	SOMAN	SOMAN
	NOTE: The monthly recurring and non-recurring charges below will apply and the Switch-As-Is Charge will not apply for UNE combinations provisioned as ' Ordinarily Combined' Network Elements.															
	NOTE: The monthly recurring and the Switch-As-Is Charge and not the non-recurring charges below will apply for UNE combinations provisioned as ' Currently Combined' Network Elements.															
	DS1 DIGITAL LOOP AND DS1 INTERFOFFICE TRANSPORT															
	4-Wire DS1 Digital Loop in Combination - Zone 1		1	UNC1X	USLXX	104.50										
	4-Wire DS1 Digital Loop in Combination - Zone 2		2	UNC1X	USLXX	178.74										
	4-Wire DS1 Digital Loop in Combination - Zone 3		3	UNC1X	USLXX	301.17										
	Interoffice Transport - Dedicated - DS1 combination - Per Mile per month			UNC1X	1L5XX	0.31										
	Interoffice Transport - Dedicated - DS1 combination - Facility Termination per month			UNC1X	U1TF1	70.97										
	DS3 DIGITAL LOOP WITH DEDICATED DS3 INTEROFFICE TRANSPORT															
	DS3 Local Loop in combination - per mile per month			UNC3X	1L5ND	14.10										
	DS3 Local Loop in combination - Facility Termination per month			UNC3X	UE3PX	352.31										
	Interoffice Transport - Dedicated - DS3 - Per Mile per month			UNC3X	1L5XX	7.38										
	Interoffice Transport - Dedicated - DS3 combination - Facility Termination per month			UNC3X	U1TF3	810.20										
	STS-1 DIGITAL LOOP WITH DEDICATED STS-1 INTEROFFICE TRANSPORT															
	STS-1 Local Lolp in combination - per mile per month			UNCSX	1L5ND	14.10										
	STS-1 Local Loop in combination - Facility Termination per month			UNCSX	UDLS1	360.51										
	Interoffice Transport - Dedicated - STS-1 combination - per mile per month			UNCSX	1L5XX	7.38										
	Interoffice Transport - Dedicated - STS-1 combination - Facility Termination per month			UNCSX	U1TFS	810.11										
	NOTE: Rates displaying an "N" in the interim column are agreed to by the Parties until such time as modified by Commission order and are not subject to true-up.															
	NOTE: Rates displaying an "I" in the interim column are interim as a result of a Commission order.															

ATTACHMENT 3

NETWORK INTERCONNECTION

TABLE OF CONTENTS

1 General 3

2 Definitions: (For the purpose of this Attachment) 3

3 Network Interconnection 6

4 Interconnection Trunk Group Architectures 8

5 Network Design And Management For Interconnection 13

6 Local Dialing Parity 17

7 Interconnection Compensation 17

8. Basic 911 and E911 Interconnection 23

MCI Factors Reference Guide 25

1 Introduction 25

2 Factors 25

3 Frequency of Reporting 28

Rates ..... Exhibit A
Basic Architecture ..... Exhibit B
Two Way Architecture ..... Exhibit C
Supergroup Architecture ..... Exhibit D

Network Interconnection

1 General

The Parties shall interconnect their networks for the mutual exchange of telephone exchange service traffic (including Local Traffic), Exchange Access Traffic, ISP Bound Traffic, IP Enabled Services traffic, and Transit Traffic.

2 Definitions: (For the purpose of this Attachment)

For purposes of this attachment only, the following terms shall have the definitions set forth below:

2.1 Advanced Services is defined as high speed, switched, broadband, wireline telecommunications capability that enables users to originate and receive high-quality voice, data, graphics or video telecommunications using any technology.

2.2 Automatic Location Identification (ALI) is a database feature by which the address associated with the calling party's telephone number and/or physical location of the caller is identified through Automatic Number Identification (ANI) and forwarded to a Public Service Answering Point (PSAP) for display. Access to the ALI database is described in Attachment 2 to this Agreement.

2.3 Automatic Number Identification (ANI) corresponds to the seven/ten-digit telephone number assigned to a caller by the serving local exchange carrier.

2.4 911 Service is an emergency reporting system whereby a caller can dial a common number (911) for all emergency services. The caller will be answered at a common answering location or PSAP which will determine the nature of the emergency and dispatch the proper response teams. 911 Service is sometimes referred to as Basic 911 service (B911) or Enhanced 911 Service (E911).

2.4.1 B911 service is a centralized emergency reporting system that automatically connects 911 callers to the common answering location or PSAP, but which does not provide ALI to the 911 attendant at the common answering location or PSAP. Call routing is determined by the Central Office from which the call originated.

2.4.2 E911 service includes all of the services provided by B911 service, as well as Selective Routing and the ANI and ALI identification and information of the 911 caller to the 911 operator.

2.5 E911 Tandem Office is the central office that provides tandem switching for 911 calls. Each E911 PSAP connects to one (1) or more E911 Tandem. The E911 Tandem deliver 911 voice calls with ANI and ALI identification and information to the PSAP and provides normal and emergency-specific switching functions. The specialized switch at the E911 Control Office is known as an E911 Tandem or Selective Router.

2.6 Call Termination as set forth in 47CFR 51.701(d) is the switching of Telecommunications Traffic at the terminating carrier's end office switch, or equivalent facility, and delivery of such traffic to the called party's premises.

2.7 Call Transport as set forth in 47CFR 51.701(c) is the transmission and any necessary tandem switching of Telecommunications Traffic subject to Section 251(b)(5) of the Act from the Interconnection Point between the Parties to the terminating carrier's end office switch that directly serves the called party, or equivalent facility provided by a carrier other than BellSouth.

2.8 Commercial Mobile Radio Service (CMRS) is a mobile service or the functional equivalent of a mobile service that is: (1) provided for profit, i.e., with the intent of receiving compensation or monetary gain; (2) An interconnected service; and (3) Available to the public, or to such classes of eligible users as to be effectively available to a substantial portion of the public.

2.9 Common (Shared) Transport is defined as the transmission facilities shared by more than one (1) carrier, including BellSouth, between end office switches including remote end offices, between end office switches and tandem switches, and between tandem switches, in BellSouth's network.

2.10 Dedicated Interoffice Facility is defined as a switched transport facility between a Party's Serving Wire Center (SWC) and the first point of switching within the LATA on the other Party's network.

2.11 End Office Switching is defined as the function that establishes a communications path between the trunk side and line side of the End Office switch.

2.12 Exchange Access ("Switched Access") is as defined in 47USC§153(16).

2.13 Fiber Meet is an interconnection arrangement whereby each Party physically builds its network via an optical fiber interface to an Interconnection Point at which one (1) Party's facilities, provisioning, and maintenance responsibilities begin and the other Party's responsibilities end.

2.14 Final Trunk Group is defined as a trunk group that does not overflow excess traffic to an alternate route or alternate trunk group.

2.15 Interconnection Point (IP) is a physical point of interconnection between two (2) networks at which one (1) Party's responsibility for service begins and the other Party's responsibility ends.

2.16 IntraLATA Toll Traffic is as defined in Section 7 of this Attachment.

2.17 IP Enabled Services includes, but is not limited to, services and applications that rely on Internet protocol for all or part of the transmission of a call. IP Enabled Services could include the digital communications capabilities of increasingly higher speeds, that use a number of transmission network technologies, and that generally have in common the use of Internet protocol. IP enabled applications could include capabilities based on higher-level software that can be invoked by the customer or on the customer's behalf to provide functions that make use of communications services.

2.18 IP/PSTN Traffic is a subset of IP Enabled Services that undergoes a Net Protocol Conversion as defined herein, between the calling and called parties.,

2.19 PSTN/IP/PSTN Traffic is a subset of IP Enabled Services that is not IP/PSTN Traffic and that features enhanced services that provide customers a capability for generating, acquiring, storing, transforming, processing, retrieving, utilizing, or making available information.

2.20 Net Protocol Conversion occurs when a call originates from one (1) customer in one (1) protocol (e.g. IP) and terminates to another customer in another protocol (e.g. TDM).

2.21 Local Channel is defined as switched transport facility between a particular point on one (1) Party's network and the Serving Wire Center for the location of that same Party's network point. An intraoffice cross connect is not a Local Channel.

2.22 Local Traffic is defined in Section 7 of this Attachment.

2.23 Meet Point Interconnection Arrangement is an arrangement by which each telecommunications carrier builds and maintains its network to a meet point.

2.24 Public Safety Answering Point (PSAP) is a facility that has been designated to receive 911 calls and route them to emergency services personnel. PSAPs are customarily designated as primary or secondary; a primary PSAP is the first contact a 911 caller will get. The PSAP operator at the primary PSAP verifies or obtains the caller's location, determines the nature of the emergency and decides which emergency response teams should be notified. ALI, contained in a database, provides supplemental information for purposes of locating the caller, determining if hazardous materials are located at the caller's location, etc. In some instances, the primary PSAP may dispatch aid, but in most cases, the caller is conferenced or transferred to a secondary PSAP, which might be located at fire dispatch areas, municipal police headquarters or ambulance dispatch centers, from which help will be dispatched. Often the primary PSAP will answer 911 calls for an entire region.

2.25 Reciprocal Trunk Group is defined as a one-way trunk group carrying BellSouth originated traffic to be terminated by MCI.

2.26 Serving Wire Center (SWC) is one (1) Party's wire center that is designated by that same Party to serve the geographic area in which the other Party has designated a network point for the purpose of interconnection.

2.27 Selective Routing (SR) is the routing of an E911 call to the proper PSAP based upon the location of the caller associated with the caller's ANI.

2.28 Tandem Switching is defined as the function that establishes a communications path between two (2) switching offices through a third switching office through the provision of trunk side to trunk side switching. Tandem Switching also includes the switching function of a carrier other than BellSouth that is as defined in 47 C.F.R. 51.711(a) (3) and whose tandem/end office homing arrangements are contained in the LERG.

2.29 Telecommunications Service refers to the offering of telecommunications for a fee directly to the public, or to such classes of users as to be effectively available directly to the public, regardless of the facilities used.

2.30 Transit Traffic is traffic that is switched and/or transported by one (1) Party to the other Party for delivery to a third party's network, or traffic originating on a third party's network that is switched and/or transported by one (1) Party to the other Party for termination.

3 Network Interconnection

3.1 The Parties shall interconnect directly or indirectly with the facilities and equipment of other telecommunications carriers in accordance with Section 251 (a) of the Act. BellSouth shall interconnect with MCI at any technically feasible point within BellSouth's network upon request for the transmission and routing of telephone exchange service and exchange access in accordance with Section 251(c) of the Act.

3.2 At a minimum, BellSouth shall design interconnection facilities to meet the same technical criteria and service standards that are used within its own network. This obligation is not limited to a consideration of service quality as perceived by customers, and includes, but is not limited to, service quality as perceived MCI. If MCI requests interconnection superior in quality to that provided by BellSouth to itself or to any subsidiary, affiliate, or any other party to which BellSouth provides interconnection, such request shall be made through the Bona Fide Request/New Business Request (BFR/NBR) process set out in this Agreement.

3.2.1 Each Party is responsible for providing, engineering and maintaining the network on its side of the IP. At a minimum, MCI must locate an IP within BellSouth's serving territory in every LATA where it intends to originate traffic for interconnection with BellSouth. The IP determines the point at which the originating Party shall pay reciprocal compensation to the terminating Party for Call Transport and Call Termination.

3.2.2 Pursuant to the requirements of Section 251(c) of the Act, BellSouth shall provide for interconnection with BellSouth's network for the transmission and routing of telephone exchange service and exchange access at any technically feasible point within BellSouth's network as requested by MCI. Any IPs existing prior to the Effective Date of the Agreement will be accepted as initial IPs. When MCI requests two-way interconnection trunk groups for the exchange of Local Traffic, ISP-bound Traffic and IntraLATA Toll Traffic between each other, the Parties shall coordinate with each other to design, construct and operate the IP in a nondiscriminatory manner in accordance with all applicable industry standards and the terms of this Agreement.

3.2.3 When first establishing an interconnection arrangement in a LATA, MCI shall consult with BellSouth in order to identify a technically feasible location for the IP. MCI will act in good faith in selecting the IP. If BellSouth denies MCI's request for interconnection at the requested location, BellSouth must prove to the Commission that interconnection at that point is not technically feasible. The Parties shall establish additional IPs in a LATA upon request by MCI. BellSouth will not request the establishment of an IP where physical or virtual collocation space is not available or where BellSouth fiber connectivity is not available.

3.3 Interconnection using Leased Dedicated Facilities

3.3.1 Local Channel Facilities. Either Party may request Local Channel facilities from the other Party. The charges applied to the Local Channel facilities shall be determined by applying the factors as provided in this Attachment.

3.3.2 Dedicated Interoffice Facilities. Either Party may request Dedicated Interoffice Facilities from the other Party. The charges applied to the Dedicated Interoffice Facilities shall be determined by applying the factors as provided in this Attachment.

3.3.3 Where either Party purchases Local Channel or Dedicated Interoffice facilities from the other Party for the purpose of originating or terminating Exchange Access with a third party IXC, such traffic will be considered as "Local Traffic" for the purpose of calculating jurisdictional factors only.

3.4 The facilities purchased pursuant to this Section shall be ordered via the Access Service Request (ASR) process. The ordering process used pursuant to this Attachment is not indicative of the nature of the services being ordered or their pricing.

3.5 Fiber Meet

3.5.1 Mid-Span Fiber Meet. If MCI elects to establish interconnection with BellSouth pursuant to a mid-span Fiber Meet, the Parties shall jointly engineer, operate and maintain a Synchronous Optical Network (SONET) transmission system by which they shall interconnect their networks. The Parties shall work jointly to determine the specific transmission system. However, the SONET transmission system must be compatible with the technical specifications determined by the Parties, and the Data Communications Channel (DCC) must be turned off.

3.5.1.1 The Parties shall jointly coordinate and undertake maintenance and testing of the SONET transmission system.

3.5.1.2 BellSouth shall, wholly at its own expense, procure, install and maintain the agreed upon SONET equipment in the BellSouth Interconnection I.P. ("BIP").

3.5.1.3 MCI shall, wholly at its own expense, procure, install and maintain the agreed upon SONET equipment in the MCI Interconnection Point IP ("MCI IP").

3.5.1.4 MCI shall designate a manhole or other suitable entry way located outside the BIP and BellSouth shall make all necessary preparations to receive and to allow and enable MCI to deliver fiber optic facilities into that manhole, providing sufficient spare length of Optical Fire Resistance ("OFR") cable to reach the Fiber Optical Terminal ("FOT") equipment in the BIP. MCI shall deliver and maintain such strands wholly at its own expense. BellSouth shall take the fiber from the manhole and terminate it inside the BIP in the FOT equipment at BellSouth's expense.

3.5.1.5 BellSouth shall designate a manhole or other suitable entry way outside MCI's IP and MCI shall make all necessary preparations to receive and to allow and enable BellSouth to deliver fiber optic facilities into that manhole, providing sufficient spare length of OFR cable to reach the FOT equipment at MCI's IP. BellSouth shall deliver and maintain such strands wholly at its own expense. MCI shall take the fiber from the manhole and terminate it inside MCI's IP in the FOT equipment at MCI's expense.

3.5.1.6 Each Party shall use its best efforts to ensure that fiber received from the other Party will enter the Party's IP through an entrance facility separate from that from which the Party's own fiber exited.

3.5.1.7 The Parties shall work cooperatively to determine the assignment control of the fiber strands that will be used for the Mid-Span Fiber Meet facility.

3.5.1.8 Unless otherwise limited by existing equipment constraints, the minimum data rate hand off of the SONET transmission system must be at OC-48. Unless otherwise mutually agreed, the OC-48 system will be activated in OC-12 increments. Trunks using the OC-48 transmission system shall be combined at the DS0, DS1, DS3, STS1, and OCn levels.

3.5.2 Mid-Point Fiber Meet. If MCI elects to establish interconnection with BellSouth pursuant to a mid-point fiber meet, the Parties shall mutually agree to a Fiber Meet point between the BellSouth Serving Wire Center and the MCI Serving Wire Center. The Parties shall deliver their fiber optic facilities to the Fiber Meet point with sufficient spare length to reach the fusion splice point for the Fiber Meet Point. BellSouth shall, at its own expense, provide and maintain the fusion splice point for the Fiber Meet. A building type Common Language Location Identification (CLLI) code will be established for each Fiber Meet point. All orders for interconnection facilities from the Fiber Meet point shall indicate the Fiber Meet point as the originating point for the facility. Each Party shall maintain its part of the Mid-Point fiber meet. The Fiber Meet facility shall consist of only a Local Channel provided by each Party to the Fiber Meet point.

3.5.2.1 Upon verbal request by MCI, BellSouth shall allow MCI access to the fusion splice point for the Fiber Meet point for maintenance purposes on MCI's side of the Fiber Meet point.

3.5.2.2 Neither Party shall charge the other Party for its portion of the Mid Point Fiber Meet facility identified by each Party's applicable PLF factor. All other appropriate charges will apply.

3.5.3 Sizing of Joint Fiber Facilities. The capacity of Interconnection facilities provided by each Party over the Fiber Meet will be based on mutual forecasts and sound engineering practice, as agreed by the Parties during planning and forecasting meetings. The Parties will determine the appropriate sizing for facilities based on these standards. The Parties shall work cooperatively to ensure the adequacy of Interconnection facilities. The Parties shall augment existing facilities when the overall capacity of those facilities is 75-85% used or as otherwise agreed. Facilities will be augmented to ensure adequate facility capacity for at least two (2) years of forecasted traffic. The Parties shall complete the construction of relief facilities at least two (2) months prior to the projected exhaust date, or sooner, if facilities exhaust is imminent.

4 Interconnection Trunk Group Architectures

4.1 BellSouth will provide MCI network interconnection trunk groups for Call Transport and Call Termination of telephone exchange services traffic (including Local Traffic), , Exchange Access Traffic, ISP Bound Traffic, IP Enabled Services traffic and Transit Traffic.

4.2 In accordance with this Agreement, where appropriate, BellSouth and MCI will meet to discuss interconnecting trunk groups, trunking architectures and NPA/NXX routing. The discussion will include, but is not limited to, establishing an Interconnection Point, exchanging switch information, determining the need for other types of trunking; i.e.: Operator Services, E911, etc. and any additional information needed to establish the interconnecting networks.

4.3 BellSouth and MCI shall establish interconnecting trunk groups and trunk group configurations between networks, including the use of one-way or two-way trunks in accordance with the following provisions set forth in this Agreement.

4.4 Any interconnection request that: (1) deviates from the interconnection trunk group architectures as described in this Agreement, (2) affects traffic delivered to a Party from the other Party's switch, and (3) requires special switch translations and other network modifications will require that Party to submit a BFR/NBR via the BFR/NBR Process as set forth in this Agreement.

4.5 The Parties shall establish an interconnection trunk group(s) to at least one (1) BellSouth access tandem within a LATA where the Parties have interconnected. Upon MCI's request, the Parties shall establish interconnection trunk groups to BellSouth access tandems within the LATA other than the tandems(s) to which the Parties have established interconnection trunk groups, via the Multiple Tandem Access process described in this Attachment.

4.6 Notwithstanding the forgoing, MCI shall establish interconnection trunk group(s) to all BellSouth access and local tandems in the LATA where it has homed (i.e. assigned) its NPA/NXXs. MCI shall home its NPA/NXXs on the BellSouth, MCI, or third-party tandems that serve the exchange rate center areas to which the NPA/NXXs are assigned. The specified exchange rate center assigned to each BellSouth tandem is defined in the LERG. MCI shall enter its NPA/NXX access and/or local tandem homing arrangements into the LERG.

4.7 Switched access traffic will be delivered to and from Interexchange Carriers (IXCs) based on MCI's NXX access tandem homing arrangement defined in the LERG.

4.8 Where necessary, BellSouth shall load MCIm's NXXs in BellSouth's switches based on the information for those NXXs as specified by MCIm in the LERG, and BellSouth shall switch traffic as specified by the NXX tandem homing arrangements set forth in the LERG.

4.9 Neither Party shall charge the other Party the nonrecurring "Installation Trunk Side Service - per DS0" charges for interconnection trunk groups ordered pursuant to this Attachment.

4.10 With the exception of Transit Traffic and the Call Transport and Call Termination rates described in Section 7 of this Attachment (for Local Traffic and ISP-bound Traffic), neither Party shall charge the other Party for one-way or two-way interconnection trunks, facilities, or ports used to exchange Local Traffic and ISP-bound Traffic, regardless of whether such interconnection trunks, facilities, or ports are on the originating or terminating side of the IP. Nothing in the foregoing is intended to alter the terms of either

Party's applicable access tariffs. Both Parties, as appropriate, shall be compensated for the trunks, trunk ports and facilities used exclusively for Transit Traffic.

4.11 All trunk groups will be provisioned as Signaling System 7 (SS7) capable where technically feasible. If SS7 is not technically feasible, multi-frequency (MF) protocol signaling shall be used.

4.12 In cases where MCI is also an IXC, the IXC's Feature Group D (FG D) trunk group(s) must remain separate from the local interconnection trunk group(s).

4.13 Each Party shall order interconnection trunks and trunk groups, including trunk and trunk group augmentations, via the ASR process. A Firm Order Confirmation (FOC) shall be returned to the ordering Party, after receipt of a valid, error free ASR, within the timeframes set forth in each state's applicable Performance Measures. Notwithstanding the foregoing, blocking situations and projects shall be managed through BellSouth's Carrier Interconnection Switching Center (CISC) Project Management Group and equivalent trunking group, and FOCs for such orders shall be returned in the timeframes applicable to the project in accordance with Attachment 9. A project is defined as (1) a new trunk group or (2) a request for more than 192 trunks on a single or multiple group(s) in a given BellSouth local calling area.

4.14 Interconnection Trunk Groups for Exchange of Local Traffic and Transit Traffic

Upon request of MCI mutual agreement of the Parties, the Parties shall exchange Local Traffic on two-way interconnection trunk group(s). The quantity of trunks shall be mutually determined and the provisioning shall be jointly coordinated. Furthermore, MCI shall designate the IP(s) for two-way interconnection trunk groups. MCI shall order such trunks via the ASR process. BellSouth will use the Trunk Group Service Request (TGSR) to request changes in trunking. Furthermore, the Parties shall jointly review trunk performance and forecasts in accordance with this Attachment. If either Party requests additional two-way trunks and the other Party refuses to install such trunks the requesting Party may order one-way trunks for its own originated traffic.

4.14.1 BellSouth Access Tandem Interconnection

BellSouth access tandem interconnection at a single access tandem provides access to those end offices subtending that access tandem. BellSouth shall not switch SWA traffic through more than one (1) BellSouth access tandem. Access tandem interconnection is available upon MCI's request for any of the following access tandem architectures:

4.14.1.1 Basic Architecture

In the basic architecture, MCI's originating telephone exchange services traffic (including Local Traffic), Exchange Access Traffic, ISP Bound Traffic, IP Enabled Services traffic and Transit Traffic, is transported on a single two-way trunk group between MCI and BellSouth access tandem(s) within a LATA. BellSouth originated telephone exchange services traffic (including Local Traffic), Exchange Access Traffic, ISP Bound Traffic, IP Enabled Services traffic and Transit Traffic is transported on a separate single one-way

trunk group terminating to MCI. The LERG contains current tandem serving arrangements. The basic Architecture is illustrated in Exhibit B.

4.14.1.2 Two-Way Trunk Group Architecture

The two-way trunk group Architecture establishes one (1) two-way trunk group to provide Access for the exchange of telephone exchange services traffic (including Local Traffic), Exchange Access Traffic, ISP Bound Traffic and IP Enabled Services traffic between MCI and BellSouth. In addition, a separate two-way transit trunk group must be established for any and all Transit Traffic. All originating traffic, except transit traffic, will be placed on the two-way Local Traffic trunk group carrying ISP-bound Traffic and IntraLATA Toll Traffic. The LERG contains current tandem serving arrangements. The two-way trunk group architecture is illustrated in the Two-Way Trunk Group Architecture Exhibit C.

4.14.1.3 Supergroup Architecture

In the Supergroup architecture, the Parties' telephone exchange services traffic (including Local Traffic), Exchange Access Traffic, ISP Bound Traffic, IP Enabled Services traffic and Transit Traffic are exchanged on a single two-way trunk group between MCI and BellSouth to provide each other access. The LERG contains current tandem serving arrangements. The Supergroup architecture is illustrated in the Supergroup Architecture Exhibit D.

4.14.1.4 Multiple Tandem Access (LATA Wide) Interconnection

4.14.1.4.1 MCI may utilize BellSouth's multiple tandem access (MTA) for interconnection within a LATA. To utilize MTA, MCI must establish an interconnection trunk group(s) at a BellSouth access tandem. Subject to Section 4.14.1.5.3 below, BellSouth will route MCI's originated Local Traffic, ISP-bound Traffic, IntraLATA Toll, and Transit Traffic delivered to BellSouth for LATA wide transport and termination.

4.14.1.4.2 MCI must establish interconnection trunk group(s) at all BellSouth access tandems where MCI NXX's are homed. MTA shall be billed in accordance with the rates in Exhibit A.

4.14.1.4.3 MCI may also utilize MTA to route its originated Transit Traffic; provided, however, that MTA may not be utilized to route switched access traffic that transits the BellSouth network to an Interexchange Carrier (IXC). Switched access traffic originated by or terminated to MCI will be delivered to and from IXCs based on MCI's NXX access tandem homing arrangement as specified by MCI in the LERG.

4.14.1.4.4 To the extent MCI does not purchase MTA in a LATA served by multiple access tandems, MCI must establish an interconnection trunk group(s) to every access tandem in the LATA to serve the entire LATA. To the extent MCI routes its traffic in such a way that utilizes BellSouth's MTA service without properly ordering MTA, MCI shall pay BellSouth the MTA charges associated with the improperly routed traffic.

4.14.2 Local Tandem Interconnection

4.14.2.1 Local tandem interconnection arrangements allow MCI to establish interconnection trunk group(s) to BellSouth local tandems for the exchange of telephone exchange services

traffic (including Local Traffic), Exchange Access Traffic, ISP Bound Traffic, IP Enabled Services traffic and Transit Traffic.

4.14.2.2 MCI shall establish interconnection trunk groups to all BellSouth local tandems at which MCI NXXs are homed. Additionally, MCI may choose to establish an interconnection trunk group(s) at the BellSouth local tandems where it has no codes homing but is not required to do so. MCI may deliver telephone exchange services traffic (including Local Traffic), Exchange Access Traffic, ISP Bound Traffic, IP Enabled Services traffic and Transit Traffic to a "homed" BellSouth local tandem that is destined for other BellSouth or third party network provider end offices subtending other BellSouth local tandems in the same local calling area where MCI does not choose to establish an interconnection trunk group(s). It is each Party's responsibility to enter its own NPA/NXX local tandem homing arrangements into the LERG either directly or via a vendor in order for other third party network providers to determine appropriate traffic routing to MCI's codes. The Parties shall obtain their routing information from the LERG.

4.14.2.3 Traffic routed to the local tandem in error will not be backhauled to the BellSouth access tandem for completion.

4.14.3 Trunks and facilities for operator services, directory assistance and intercept may be ordered by MCI from BellSouth pursuant to the terms and conditions contained in this Attachment 3.

4.14.4 Direct End Office-to-End Office Interconnection

4.14.4.1 Direct End Office-to-End Office one-way or two-way interconnection trunk groups as specified by MCI allow for the delivery of a Party's originating telephone exchange services traffic (including Local Traffic), , Exchange Access Traffic, ISP Bound Traffic, IP Enabled Services traffic and Transit Traffic to the terminating Party on a direct end office-to-end office basis.

4.14.4.2 The Parties shall utilize direct end office-to-end office trunk groups under any one (1) of the following conditions:

4.14.4.2.1 Tandem Exhaust - If a tandem through which the Parties are interconnected is unable to, or is forecasted to be unable to support additional traffic loads for any period of time, the Parties will mutually agree on an end office trunking plan for any future trunking needs that arise before the exhaust condition is relieved that will ensure completion of traffic between MCI and BellSouth until the tandem exhaust problem is rectified.

4.14.4.2.2 Traffic Volume - To the extent either Party has the capability to measure the amount of traffic between MCI's switch and a BellSouth end office and where such traffic exceeds or is forecasted to exceed a single DS1 of traffic per month, the Parties shall install direct end office trunking sufficient to handle such traffic volumes until the existing trunk groups are augmented. Either Party will install additional capacity between such points when overflow traffic exceeds or is forecasted to exceed a single DS1 of traffic per month. In the case of one-way trunking, additional trunking shall only be required by the Party whose trunking has achieved the preceding usage threshold. The installation of such direct end

office trunking shall not create an additional IP, and each Party shall remain responsible for the cost of facilities on its side of the IP.

4.14.4.2.3 Mutual Agreement - The Parties may install direct end office trunking in those instances where direct end office trunking is appropriate based upon the proper application of standard trunk engineering practices upon mutual agreement in the absence of Tandem Exhaust above.

4.14.5 Transit Traffic Trunk Group

MCI may require Transit Traffic trunks to be provisioned as two-way trunks or two (2) one-way trunks to deliver and receive Transit Traffic. Establishing Transit Traffic trunks at BellSouth access and local tandems provides access to the third parties also interconnected at those tandems.

4.14.6 Toll Free Traffic

4.14.6.1 If MCI chooses BellSouth to perform the Service Switching Point (SSP) Function (i.e., handle Toll Free database queries) from BellSouth's switches, all MCI originating Toll Free traffic will be routed over the Transit Traffic trunk group and shall be delivered using GR-394 format. Carrier Code "0110" and a Circuit Code shall be used for all such calls.

4.14.6.2 MCI may choose to perform its own Toll Free database queries from its switch. In such cases, MCI will determine the routing of the calls in accordance with applicable industry standards and the information received from the SMS database.

4.14.6.3 All post-query Toll Free calls for which MCI performs the SSP function, if delivered to BellSouth, shall be delivered using GR-394 format over the interconnection trunk group for calls destined to the switched access Toll Free Service provider. MCI shall bill the applicable IXC for any queries at the rates set forth in the applicable tariff.

5 Network Design And Management For Interconnection

5.1 Network Management and Changes. The Parties will exchange toll-free maintenance contact numbers and escalation procedures. The Parties will provide public notice of network changes in accordance with applicable federal and state rules and regulations.

5.2 Interconnection Technical Standards. The interconnection of all networks will be based upon accepted industry/national guidelines for transmission standards and traffic blocking criteria. Interconnecting facilities shall conform, at a minimum, to the telecommunications industry standard of DS-1 pursuant to Telcordia Standard No. TR-NWT-00499. Where MCI chooses to utilize Signaling System 7 signaling, also known as Common Channel Signaling (SS7), SS7 connectivity is required between the MCI switch and the BellSouth Signaling Transfer Point (STP). BellSouth will provide SS7 signaling using Common Channel Signaling Access Capability in accordance with the technical specifications set forth in the BellSouth Guidelines to Technical Publication, TR-TSV-000905. Facilities of each Party shall provide the necessary on-hook, off-hook answer and disconnect supervision and shall provide calling number ID (Calling Party Number) when technically feasible.

5.3 Network Management Controls. Both Parties will work cooperatively to apply sound network management principles by invoking appropriate network management controls to alleviate or prevent network congestion. MCI and BellSouth will immediately notify each other of any protective control action planned or executed

5.4 Interconnection Protocols

5.4.1 All Interconnection facilities shall be Extended Super Frame with Binary 8 Zero Substitution line coding (“ESF B8ZS”) or Alternate Mark Inversion line code (“AMI”) or Superframe Format (“SF”) as specified by MCI.

5.5 SS7 Signaling. Unless otherwise specified by MCI, both Parties will utilize LEC-to-LEC SS7 Signaling, where available, in conjunction with all trunk groups in order to enable full interoperability of CLASS features and functions except for call return. All SS7 signaling parameters will be provided as defined in GR-317 and GR-394, including but not limited to ISDN User Part (ISUP) for trunk signaling, Carrier Identification Code (CIC), where available, Automatic Number Identification (ANI), Originating Line Information (OLI), calling company category and charge number. All privacy indicators will be honored, and the Parties will exchange Transactional Capabilities Application Part (TCAP) messages to facilitate full interoperability of SS7-based features between their respective networks. All Network Operations Forum (NOF) adopted standards shall be adhered to. Both MF and SS7 trunk groups will not be provided within a single DS-1 facility; a separate DS-1 per signaling type must be used. Neither Party shall alter the SS7 parameters, or be a party to altering such parameters, or knowingly pass SS7 parameters that have been altered in order to circumvent appropriate interconnection charges. Nothing herein shall obligate or otherwise require either Party to perform call-related database queries to the other Party’s or any other third-party’s call-related database, unless otherwise agreed to by the Parties under a separate agreement. The Parties shall institute a "bill and keep" compensation plan under which neither Party will charge the other Party recurring charges as set forth in Exhibit A for CCS7 signaling messages associated with Local Traffic (including a Party's provision of exchange access to a third party or to an Affiliate). The remaining portion of the CCS7 messages (i.e., the portion associated with non-Local Traffic) may be subject to charges pursuant to applicable tariffs.

5.6 Signaling Call Information. BellSouth and MCI will send and receive ten (10) digits for Local Traffic. Additionally, BellSouth and MCI will meet and mutually agree to network protocols which include but are not limited to glare parameters, number of digits outpulsed, OZZ codes, and 800 CIC codes in use. The Parties shall also mutually agree upon all proper translations for routing between networks and any information necessary for billing.

5.7 Forecasting for Trunk Provisioning

5.7.1 Unless the parties have developed an existing forecasting arrangement, within six (6) months after execution of this Agreement, MCI shall provide an initial interconnection trunk group forecast for each LATA in which it plans to provide service within BellSouth’s region. Upon receipt of MCI’s forecast, the Parties shall conduct a joint planning meeting to develop a joint interconnection trunk group forecast. Each forecast provided under this Section shall be deemed “Confidential Information” under the General Terms and Conditions of this Agreement.

5.7.1.1 At a minimum, the forecast shall include the projected quantity of Transit Trunks, MCI-to-BellSouth one-way trunks (MCI Trunks), BellSouth-to-MCI one-way trunks (Reciprocal Trunk Groups) and/or two-way interconnection trunks, if the Parties interconnect using two-way trunking to transport the Parties' Local Traffic and IntraLATA Toll Traffic. The quantities shall be projected for a minimum of six months and shall include an estimate of the current year plus the next two (2) years total forecasted quantities. The Parties shall mutually develop Reciprocal Trunk Groups and/or two-way interconnection trunk forecast quantities.

5.7.1.2 All forecasts shall include, at a minimum, MCI POI/Access Carrier Terminal Location (ACTL), trunk group type (local, intraLATA toll, interLATA toll, Transit, Operator Services, Directory Assistance, 911, BLV/BLVI, etc.), BellSouth location where the trunks shall terminate (Far End CLLI), Direction of Traffic (In, Out, 2W), Signaling Type (SS7, MF), Traffic Class (PH, DF, AF, IH) Forecast Reference Points (circuits in Service, # of circuits on order, Total of circuits in service and orders), Trunk Group Serial Number, if known, (commonly referred to as the 2-6 code) and current year quarterly forecast, next year quarterly forecast, plus 2 additional years forecast.

5.7.1.3 Description of major network projects that affect the other party will be provided in the semi-annual forecasts. Major network projects include but are not limited to trunking or network rearrangements, shifts in anticipated traffic patterns, or other activities by either party that are reflected by a significant increase or decrease in trunking demand for the following forecasting period.

5.7.2 The submission and development of interconnection trunk forecasts shall not replace the ordering process for local interconnection trunks. Each Party shall exercise its best efforts to provide the quantity of interconnection trunks mutually forecasted. However, the provision of the forecasted quantity of interconnection trunks is subject to trunk terminations and facility capacity existing at the time the trunk order is submitted. Furthermore, the receipt and development of trunk forecast do not imply any liability for failure to perform if capacity (trunk terminations or facilities) is not available for use at the forecasted time.

5.8 Trunk Utilization

5.8.1 BellSouth and MCI shall monitor traffic on each interconnection Final Trunk Group that is ordered and installed. The Parties agree that the Final Trunk Groups should be utilized at sixty percent (60%) of the time consistent busy hour utilization level within ninety (90) calendar days of installation. The Parties agree that the Final Trunk Groups will be utilized at seventy-five percent (75%) of the time consistent busy hour and that the high usage trunk groups will be utilized at ninety five percent (95%) of the time consistent busy hour utilization level within 180 calendar days of installation. Any Final Trunk Group not meeting the minimum thresholds set forth in this Section are defined as "Under-utilized" trunks. Upon notice by BellSouth of their desire to disconnect trunks via an order, MCI will FOC its concurrence or request a meeting to discuss reasons on why the trunk should not be downsized. In any event, disconnects will not be processed to reduce trunks that would cause utilization to be more than 75%.

5.8.1.1 If either Party observes that a Trunk Group is exceeding its designed call carrying capacity and is impacting other Trunk Groups in the network, the Parties shall immediately

augment the over-utilized Trunk Group as soon as possible in order to minimize the impact on customers. In order to prevent or remedy traffic blocking situations, a Party may transport traffic on a separate single one-way trunk group terminating to the other Party. However, where the Parties are responsive in a timely manner to each other's needs for its originated traffic, all originating traffic will be placed on the two-way or Supergroup Local Traffic trunk group carrying ISP-bound Traffic and IntraLATA Toll Traffic.

5.8.1.2 Either Party may notify the other of any under-utilized one-way Trunk Groups and the number of such trunk groups that Party wishes to disconnect. The Party will provide supporting information either by email or facsimile to the other Party who will either agree or disagree with the disconnection request within seven (7) business days. If the other Party disagrees with the disconnection request, it shall reply with such supporting information as expected traffic volumes (including traffic volumes generated due to Local Number Portability) and the timeframes within which it expects to need such trunks. The Parties will also discuss whether or not agreement can be reached on the number of Final Trunk Groups to be removed, if any.

5.9 Trunk Group Servicing

5.9.1 Orders between the parties to establish, add, change or disconnect trunks shall be processed by use of an ASR or another industry standard eventually adopted and mutually agreed to by the Parties to replace the ASR for local service ordering.

5.9.2 Except as set forth below, the standard interval used for the provisioning of Local Interconnection trunk groups shall be fifteen (15) business days or longer as determined by MCI's Desired Due Date unless the Parties agree to a shorter interval. Such interval shall commence upon the receipt of an error-free ASR for orders of less than 192 trunks as an addition to local trunk groups (augment), or thirty (30) business days from the receipt of an error-free ASR for establishment of less than 192 trunks on new trunk groups. An ASR shall be considered "error-free" for the purposes of this Agreement to the extent that it contains no material errors that would prevent the timely and accurate provisioning of the ASR. BellSouth will provide FOCs and Local Interconnection in accordance with the SQM intervals ordered by the Commission.

5.9.3 ASRs for orders greater than 192 trunks shall be considered a "project" that directly impacts the other Party and may be submitted at the same time, and their implementation shall be jointly planned and coordinated. Projects require the coordination and execution of multiple orders or related activities between and among BellSouth and MCI work groups, including but not limited to the initial establishment of Local Interconnection or transit trunk groups and service in an area, NXX code moves, re-homes, major facility grooming, or network rearrangements. The Parties shall negotiate the service intervals for projects.

5.9.4 For Local and intraLATA toll service, the Design Blocking Objective shall be 1% blocking in the Time-Consistent Busy Hour, except under conditions of force majeure service disruption. For trunk groups carrying access traffic to IXCs, the Design Blocking Objective shall be 1% in the Time-Consistent Busy Hour.

5.9.5 MCI and BellSouth shall provide to each other test-line numbers and access to test lines for the purpose of testing BellSouth/MCI interconnection trunk groups.

5.9.6 The Parties shall make all reasonable efforts and cooperate in good faith to develop alternative solutions to accommodate orders when facilities or equipment are not available.

6 Local Dialing Parity

6.1 BellSouth and MCI shall provide local and toll dialing parity, as defined in FCC rules and regulations, with no unreasonable dialing delays. Dialing parity shall be provided for all originating telecommunications services that require dialing to route a call.

7 Interconnection Compensation

7.1 "Local Traffic" is defined as any telephone call that originates in one (1) exchange within a LATA and terminates within the same LATA in either the same exchange, or some other local calling area associated with the originating exchange as set forth in the originating Party's tariff for basic local exchange service. Basic local exchange service means the local exchange service offered by the originating Party without regard to any optional expanded area calling plans. Local Traffic also includes traffic terminated in an area ordered by the Commission to be associated with the originating exchange. Local Traffic also includes traffic terminated in an area ordered by the Commission to be associated with the originating exchange.

7.2 "IntraLATA Toll Traffic" is defined as all traffic that originates and terminates within a single LATA that is not Local, Transit, or ISP-bound traffic under this Attachment.

7.3 "ISP Bound Traffic" is defined as calls to an information service provider or Internet service provider (ISP) that would otherwise be Local Traffic if not for the fact that the call terminates to the information service provider or ISP. ISP-Bound Traffic is not Local Traffic subject to reciprocal compensation, but instead is information access traffic subject to the FCC's jurisdiction.

7.4 Notwithstanding the definitions of Local Traffic and ISP-bound traffic above, and pursuant to the FCC's Order on Remand and Report and Order in CC Docket 99-68 released April 27, 2001 (ISP Order on Remand), BellSouth and MCI agree to the rebuttable presumption that all combined circuit switched Local and ISP-bound Traffic, including via UNE-P, delivered to BellSouth or MCI that exceeds a 3:1 ratio of terminating to originating traffic on a statewide basis shall be considered ISP-bound traffic for compensation purposes. BellSouth and MCI further agree to the rebuttable presumption that all combined circuit switched Local and ISP-bound Traffic, including via UNE-P, delivered to BellSouth or MCI that does not exceed a 3:1 ratio of terminating to originating traffic on a statewide basis shall be considered Local Traffic for compensation purposes.

7.5 The rates for the Call Transport and Call Termination of Local Traffic and ISP-Bound Traffic are as set forth in Exhibit A to this Attachment. BellSouth may charge MCI the Tandem Switching, End Office Switching and Common Transport rate elements for Local Traffic when such elements are actually used by BellSouth to terminate MCI's originated traffic. MCI may charge BellSouth the Tandem Switching rate element for Local Traffic when MCI has shown, in accordance with 47 CFR 51.711 that its switch is capable of serving a geographic area comparable to that served by BellSouth's tandem switch.

7.5.1 Intentionally Omitted

7.5.2 The rate for the Call Transport and Call Termination of ISP-bound Traffic is $.0007.

7.5.3 Intentionally Omitted.

7.5.4 For terminating its intraLATA toll traffic on the other company's network, the originating Party will pay the terminating Party the terminating Party's current intrastate or interstate, whichever is appropriate, terminating switched access tariff rates as set forth in the terminating Party's Access Services Tariffs as filed and in effect with the FCC or Commission. The appropriate charges will be determined by the routing of the call. Additionally, if one (1) Party is the other (originating) Party's customer's presubscribed interexchange carrier or if the originating Party's customer uses the other Party as an interexchange carrier on a 101XXXX basis, the originating Party will charge the other Party the appropriate originating switched access tariff rates as set forth in the originating Party's Intrastate or Interstate Access Services Tariff as filed and in effect with the FCC or appropriate Commission. Nothing in this section shall relieve BellSouth from providing MCI with the records provided pursuant to Section 7.9.5 of this Attachment. If BellSouth notifies MCI that an ICO has adopted an alternative to the Primary Carrier Plan (PCP), the Parties shall apply the appropriate meet-point billing methods. MCI acknowledges receipt of such notice for the states of Florida and North Carolina.

7.5.4.1 Except in Florida and North Carolina, unless and until BellSouth notifies MCI that an independent telephone company (ICO) has adopted an alternative to the PCP compensation arrangement with BellSouth, for intraLATA toll calls originating on an ICO's network, transported by BellSouth and delivered to MCI, MCI shall presume that BellSouth is the intraLATA toll carrier, and shall use the EMI 110101 records provided by BellSouth to MCI to bill BellSouth the appropriate access charges by applying the MCI and BellSouth agreed upon PCP ICO ratios to the EMI 110101 records on a monthly basis. Additionally, when an ICO adopts an alternative to the PCP, BellSouth must provide notice via carrier notification letter posted on BellSouth's website.

7.5.5 If either Party assigns NPA/NXXs to specific BellSouth rate centers within the LATA and assigns numbers from those NPA/NXXs to customers physically located outside of that LATA, the other Party's traffic originating from within the LATA where the NPA/NXXs are assigned and delivered to a customer physically located outside of such LATA ("V/FX" Traffic) shall be subject to intercarrier compensation in accordance with this Section 7.5.5, et. seq.,

7.5.5.1 IntraLATA traffic (i.e., where the physical end points of the call are within the LATA) shall be exchanged as though it were Local Traffic, if the originating and terminating NPA/NXXs indicate that the traffic is Local Traffic, and it shall be exchanged as though it were Intralata Toll Traffic if the originating and terminating NPA/NXXs indicate that the traffic is Intralata Toll Traffic.

7.5.5.2 In each LATA where the Parties have at least one IP in each of the BellSouth Tandem serving areas in which MCI assigns to its end user customers its own or ported telephone

numbers and at which each Party delivers its originating traffic to the other Party, the rate for the Call Transport and Call Termination of V/FX Traffic that is ISP-bound Traffic is $.0007 per minute of use.

7.5.5.3 In each LATA where the Parties do not have at least one IP in each of the BellSouth Tandem serving areas in which MCI assigns to its end user customers its own or ported telephone numbers and at which each Party delivers its originating traffic to the other Party, V/FX Traffic that is ISP-bound Traffic shall be exchanged on a bill and keep basis.

7.5.5.4 In each LATA, V/FX Traffic that is not ISP-bound Traffic shall be exchanged on a bill and keep basis. The Parties hereby agree that, as of the Effective Date, they are exchanging only a de minimis amount of V/FX Traffic that is not ISP-bound Traffic. The Parties further agree that, from time to time, upon written request from either Party, the Parties will review whether the amount of such V/FX Traffic that is not ISP-bound Traffic exchanged between them remains de minimis. If, upon such review, the amount of such V/FX Traffic that is not ISP-bound Traffic is found not to be de minimis, the Parties shall engage in good faith negotiations to amend this Agreement to establish an intercarrier compensation regime for such non-de minimis traffic.

7.5.5.5 Upon request, the Party assigning V/FX to its end users, as described above, shall provide the other Party with the information necessary, including but not limited to the location of modem pools and servers, to identify such V/FX Traffic. All information provided shall be deemed Confidential Information under the General Terms and Conditions of this Agreement.

7.6 Jurisdictional Reporting

7.6.1 Percent Local Use. Each Party shall report to the other a Percent Local Usage (PLU) factor. The application of the PLU will determine the amount of local or ISP-bound minutes to be billed to the other Party. Requirements associated with PLU factor calculation and reporting shall be as set forth in the MCI Factors Reference Guide. Each Party shall update its PLU on the first of January, April, July and October of the year and shall send it to the other Party to be received no later than 30 days after the first of each such month based on local and ISP-bound usage for the past three (3) months ending the last day of December, March, June and September, respectively.

7.6.2 Percent Interstate Usage. Each Party shall report to the other the projected Percent Interstate Usage (PIU) factor. After interstate and intrastate traffic percentages have been determined by use of PIU procedures, the PLU factor will be used for application and billing of intercarrier compensation. Requirements associated with PIU factor calculation and reporting shall be as set forth in the MCI Reference Factors Guide. Each Party shall update its PIUs on the first of January, April, July and October of the year and shall send it to the other Party to be received no later than 30 days after the first of each such month, for all services showing the percentages of use for the past three (3) months ending the last day of December, March, June and September.

7.6.2.1 Percent Interstate Usage-E. Each Party shall report to the other the projected Percent Interstate Usage-E (PIUE) factor. The utilization of switched dedicated transport services is considered in combination to determine the PIUE factors. The PIUE will be applied to the billing elements for the applicable services to apportion billing between the intrastate

and interstate jurisdictions. The total jurisdictional use of these services shall be considered when determining PIUE factors including all originating and terminating usage. The PIUE represents the percentage that these services are utilized for interstate jurisdiction applications. After interstate and intrastate traffic percentages have been determined by use of PIUE procedures, the PLF factor will be used for application and billing of switched dedicated transport. Requirements associated with PIUE factor calculation and reporting shall be as set forth in the MCI Reference Factors Guide. Each Party shall update its PIUs on the first of January, April, July and October of the year and shall send it to the other Party to be received no later than 30 days after the first of each such month, for all services showing the percentages of use for the past three (3) months ending the last day of December, March, June and September.

7.6.3 Percent Local Facility. Each Party shall report to the other a Percent Local Facility (PLF) factor. The application of the PLF factor will determine the portion of switched dedicated transport to be billed per the rates set forth in Exhibit A to this Attachment. The PLF factor shall be applied to Multiplexing, Local Channel and Interoffice Channel Switched Dedicated Transport utilized in the provision of Switched Dedicated Transport. Each Party shall update its PLF factor on the first of January, April, July and October of the year and shall send it to the other Party to be received no later than thirty (30) days after the first of each such month to be effective the first bill period the following month, respectively. If the PLF factor is not timely updated, the previously reported PLF factor will be used. Requirements associated with PLF factor calculation and reporting shall be as set forth in the MCI Reference Factors Guide. For purposes of the PLF factor calculation, the following traffic types shall be included: Exchange Access Traffic originated by or terminated to a 3rd party IXC (including an MCI affiliate with a separate ACNA); Local Traffic; and ISP-Bound Traffic.

7.6.4 Intentionally Omitted

7.6.5 Notwithstanding the provisions regarding the calculation of PLU and PIU above, where the terminating Party has message recording technology that identifies the jurisdiction of traffic terminated, utilizing originating and terminating NPA/NXXs, as defined in this Agreement, such information shall, at the terminating Party's option, be utilized to determine the appropriate jurisdictional reporting factors (the PLU & PIU) but not the PLF, in lieu of those provided by the originating Party. In the event that the terminating Party opts to utilize its own data to determine jurisdictional reporting factors, such terminating Party shall notify the originating Party at least fifteen (15) days prior to the beginning of the calendar quarter in which the terminating Party will begin to utilize its own data. Disputes regarding the calculation of such factors shall subject to the Billing Dispute Resolution and Audit provisions set forth in this Agreement. If a Party uses its own data to jurisdictionalize traffic, such Party only shall jurisdictionalize traffic to the extent such Party has access to the actual originating and terminating NPA/NXXs, and only to the extent such Party is using the actual originating and terminating NPA/NXXs. The reported jurisdictional factors shall be used for all traffic for which originating and terminating NPA/NXXs are not available. A Party reporting jurisdictional factors may choose to report separate factors for traffic for which NPA/NXXs are not available to be used in such instances.

7.6.6 Neither Party shall represent Switched Access Traffic as Local Traffic or ISP-Bound Traffic for purposes of determining compensation for the call. A Party’s use of a single

trunk group for Local Traffic and any other traffic type shall not be deemed to be a violation of this subsection.

7.7 Audits. On thirty (30) days written notice, each Party must provide the other the ability and opportunity to conduct an annual audit to ensure the proper billing of traffic. BellSouth and MCI shall retain records of call detail for a minimum of twelve months from which the PLU, PLF, and/or PIU jurisdictionalization can be ascertained. The audit shall be conducted during normal business hours at an office designated by the Party being audited. Audit requests shall not be submitted more frequently than one (1) time per calendar year. Audits shall be performed by a mutually acceptable independent auditor paid for by the Party requesting the audit. The PLU, PLF, and/or PIU shall be adjusted based upon the audit results and shall apply to the period of time for which the audit was completed. If, as a result of an audit, either Party is found to have overstated the PLU, PLF, and/or PIU, or to have incorrectly jurisdictionalized traffic (in the case of the billing party) by twenty percentage points (20%) or more, that Party shall reimburse the auditing Party for the cost of the audit.

7.8 Compensation for 8XX Traffic

7.8.1 Compensation for 8XX Traffic. When a Party's customer places an 8XX call, the other Party shall charge the originating switched access and data query charges set forth in that Party's respective intrastate or interstate switched access tariffs to the IXC that is responsible for terminating the 8XX to the appropriate Wide Area Telecommunications Service (WATS) or Plain Old Telephone Service (POTS) number.

7.8.2 Records for 8XX Billing. Each Party will provide to the other the appropriate records necessary for billing intraLATA 8XX customers. The records provided will be in a standard EMI format.

7.9 Mutual Provision of Switched Access Service

7.9.1 Switched Access Traffic. Switched Access Traffic includes, but is not limited to, the following types of traffic: Feature Group A, Feature Group B, Feature Group C, Feature Group D, toll free access (e.g., 8XX), 900 access and their successors.

7.9.1.1 The following category of IP Enabled Services that are neither IP/PSTN nor PSTN/IP/PSTN traffic is also considered Switched Access Traffic as set forth in this agreement: interLATA calls that: (1) use ordinary customer premises equipment (such as a traditional telephone) with no enhanced functionality; (2) originate and terminate on the public switched telephone network (PSTN); (3) undergo no Net Protocol Conversion as defined herein; and (4) provide no enhanced functionality to customers that result from the provider's use of IP technology. To the extent that the FCC finds that this type of IP Enabled Services is not exchange access service, or is not otherwise subject to access charges, then the Parties shall amend the Agreement in accordance with Section 12.3 of the General Terms and Conditions.

7.9.2 If either Party's customer chooses the other Party as its presubscribed interexchange carrier, or if either Party's customer uses the other Party as an interexchange carrier on a 10XXX basis, the Party will charge the other Party the appropriate tariff charges for originating switched access services. At present neither Party is available as an interexchange carrier to the other Party's customers.

7.9.3 Where the originating Party delivers Switched Access Traffic to the terminating Party over switched access facilities and where the originating Party is also the IXC, the originating Party will pay the terminating Party terminating switched access charges as set forth in the terminating Party's intrastate or interstate tariff, as appropriate.

7.9.4 When a Party's end office switch provides an access service connection to or from an interexchange carrier (IXC) by a direct trunk group to the IXC utilizing the other Party's facilities, each Party will provide its own access services to the IXC and bill on a multi-bill, multi-tariff meet-point basis. Each Party will bill its own access services rates to the IXC with the exception of the interconnection charge. The interconnection charge will be billed by the Party providing the end office function. Each party will use the Multiple Exchange Carrier Access Billing (MECAB) guidelines to establish meet point billing for all applicable traffic. The Parties shall utilize a thirty (30) day billing period.

7.9.5 When a Party's end office (End Office Party) subtends the other Party's (Tandem Party) Access Tandem switch for receipt or delivery of switched access traffic and provides an access service connection to or from an IXC via the Tandem Party's Access Tandem switch, the Tandem Party agrees to provide the End Office Party, as defined in MECAB, at no charge, all the switched access detail usage data, recorded at the access tandem, within no more than sixty (60) days after the recording date. Each Party will notify the other when it is not feasible to meet these requirements. As business requirements change, data reporting requirements may be modified as necessary.

7.9.6 The Tandem Party will retain for a minimum period of sixty (60) days, access message detail sufficient to recreate any data that is lost or damaged by the tandem provider company or any third party involved in processing or transporting data.

7.9.7 The Tandem Party agrees to recreate the lost or damaged data within forty-eight (48) hours of notification by the other or by an authorized third party handling the data.

7.9.8 Any claims against the Tandem Party, for unbillable or uncollectible revenue should be filed with the tandem provider company within 120 days of the usage date.

7.9.9 The Tandem Party shall keep records of its billing activities relating to jointly-provided Intrastate and Interstate access services in sufficient detail to permit the Subsequent Billing Party to, by formal or informal review or audit, to verify the accuracy and reasonableness of the jointly-provided access billing data provided by the Initial Billing Party. Each Party agrees to cooperate in such formal or informal reviews or audits and further agrees to jointly review the findings of such reviews or audits in order to resolve any differences concerning the findings thereof.

7.10 Transit Traffic

7.10.1 If a Party desires that the other Party provide tandem switching and transport services for Transit Traffic, such Party must formally request such service from the other Party (e.g., via an ASR for Transit Traffic trunks and facilities). Rates for local Transit Traffic and ISP-bound Transit Traffic shall be the applicable composite charge (i.e. local intermediary charge or "LIC") as set forth in Exhibit A to this Attachment. Subject to payments associated with transit trunking in Section 4.10 above, the LIC shall comprise all elemental minutes of use functions associated with Transit Traffic (i.e. tandem switching, common

transport and any billing records). Notwithstanding any other agreement between the Parties, the LIC shall be effective from August 1, 2006. The LIC shall not be subject to the change of law provisions of this Agreement unless mutually agreed upon by the Parties. Switched Access Transit Traffic shall be billed to the appropriate IXC pursuant to Section 7.9. Traffic between either Party and Wireless Type 1 third parties shall not be treated as Transit Traffic from a routing or billing perspective. Traffic between either Party and Wireless Type 2A third parties shall not be treated as Transit Traffic from a routing or billing perspective until the transiting provider and the Wireless third party have the capability to properly meet-point-bill in accordance with MECAB guidelines. The list of Wireless carriers with which BellSouth has such capabilities is available at http://www.interconnection.bellsouth.com/guides/activation/html/gacba001/index.htm. Until such time as the transiting Party and the wireless carrier have established the meet-point-bill arrangement, wireless traffic that is not treated as Transit Traffic shall be treated as the originated or terminated traffic of the transiting provider, as appropriate, and shall be jurisdictionalized in accordance with this Agreement. Such wireless traffic also shall be included in the calculation of the ratios used in the rebuttable presumption relating to ISP-Bound Traffic where such traffic is jurisdictionally Local or ISP-Bound in accordance with this Agreement. Where technically feasible, traffic between MCI and third party CLECs utilizing BellSouth switching shall not be treated as Transit Traffic from a routing and billing perspective until BellSouth and the third party CLEC have the capability to properly meet-point-bill in accordance with MECAB guidelines. The transiting Party shall be responsible for providing the terminating Party the records necessary for the terminating Party to bill the originating third party.

7.10.2 The delivery of traffic that transits the BellSouth network and is transported to another carrier's network is excluded from any BellSouth billing guarantees. BellSouth agrees to deliver Transit Traffic to the terminating carrier; provided, however, that MCI is solely responsible for negotiating and executing any appropriate contractual agreements with the terminating carrier for the exchange of Transit Traffic through the BellSouth network. BellSouth will not be liable for any compensation to the terminating carrier or to MCI. In the event that the terminating third party carrier imposes on BellSouth any charges or costs for the delivery of Transit Traffic, MCI shall reimburse BellSouth for such costs.

8. Basic 911 and E911 Interconnection

Basic 911 and E911 provides a caller access to the applicable emergency service bureau by dialing 911.

8.1 Basic 911 Interconnection. BellSouth will provide to MCI a list consisting of each municipality that subscribes to Basic 911 service. The list will also provide, if known, the E911 conversion date for each municipality and, for network routing purposes, a ten-digit directory number representing the appropriate emergency answering position for each municipality subscribing to 911. MCI will be required to arrange to accept 911 calls from its end users in municipalities that subscribe to Basic 911 service and translate the 911 call to the appropriate 10-digit directory number as stated on the list provided by BellSouth. MCI will be required to route that call to BellSouth at the appropriate 911 tandem. When a municipality converts to E911 service, MCI will be required to begin using E911 procedures.

8.2 E911 Interconnection. MCI shall install a minimum of two (2) dedicated trunks originating from MCI's switch and terminating to the appropriate E911 tandem. The dedicated trunks shall be, at a minimum, DS0 level trunks configured as part of a digital (1.544 Mb/s) interface (DS1 facility). The Parties shall exercise commercially reasonable efforts to provision interconnection trunks over geographically diverse facilities. The configuration may use CAMA-type signaling with multifrequency (MF) pulsing that will deliver ANI with the voice portion of the call. If the user interface is digital, MF pulses as well as other AC signals shall be encoded per the mu-law convention. Alternatively, as mutually agreed to by the Parties, these trunks may use SS7/ISUP signaling where available, in accordance with Section 5.5. The two (2) trunk minimum and the diversity requirements apply regardless of whether, CAMA- MF or SS7/ISUP signaling is used. MCI will be required to provide BellSouth daily updates to the E911 database. MCI will forward 911 calls to the appropriate E911 tandem along with ANI based upon the current E911 end office to tandem homing arrangement as provided by BellSouth. If the E911 tandem trunks are not available, MCI may be required to route the call to a designated 7-digit or 10-digit local number residing in the appropriate Public Service Answering Point (PSAP). When applicable, this call will be transported over BellSouth's interoffice network and will not carry the ANI of the calling party, but may or may not carry CallerID information if available from the originating MCI switch, and if supported by the signaling to and the destination line at the PSAP. MCI shall be responsible for providing BellSouth with complete and accurate data for submission to the 911/E911 database for the purpose of providing 911/E911 to its customers.

8.2.1 Rates. Trunks and facilities for 911 interconnection may be ordered by MCI from BellSouth pursuant to the terms and conditions contained in this Attachment 3.

MCI Factors Reference Guide

1 Introduction

1.1 Jurisdictional factors are utilized to apportion the billing of Access and Local Interconnections Services between the interstate, intrastate and local jurisdictions. The rates, terms and conditions applicable to the provision of services are determined based upon the jurisdictional use of the service. Where sufficient data is available the billing Party shall determine the percentage of use by jurisdiction for billing applications in accordance with this Agreement. Absent sufficient data it is incumbent upon the billed Party to accurately report jurisdictional factors in order for the billing Party to bill the associated services per contractual and regulatory requirements. This Exhibit serves as a guide for the preparation and reporting of the following jurisdictional factors related to Access and Local Interconnection Services

1.1.1 PIU - Percent Interstate Usage
1.1.2 PLU - Percent Local Usage
1.1.3 PLF - Percent Local Facility

1.2 These factors are reported by service at a state level as required. Unique service requirements are identified later in this Exhibit. In general, the PIU factors are required for Access Services and Local Interconnection Services to apportion the billing between the state and interstate jurisdictions. The Parties are also required to report PLU and PLF factors in addition to PIU factors to further apportion their intrastate use of Local Interconnection services between the state and local jurisdiction. Failure to report values for PLU and/or PLF shall result in the default value of zero percent being applied for these factors. The local jurisdiction is considered a subset of the intrastate jurisdiction in the determination and application of the PLU and PLF factors. The following sections provide information concerning the determination of factors, the application of factors, reporting procedures and customer records requirements.

2 Factors

2.1 General

2.1.1 Jurisdictional factors are jurisdictional projections of the percentages of use of access and interconnection services for billing purposes. Factors shall be provided with the first request for each service in each state and are updated quarterly based upon the most recent three (3) months of data. If factors are not updated then the billing Party shall assume that the factors are the same as those most recently provided. If a valid quarterly report has never been received then the billing Party may utilize the factor(s) provided with the initial order for service, the most recent audit results if an audit has been performed or the default value for the particular factor.

2.2 PIU - Percent Interstate Usage

2.2.1 This factor is the percentage of use that is interstate. For services that are billed on a per minute of use (MOU) basis the TPIU is based upon the traffic terminated by one (1) Party from the other Party. Any traffic that originates/terminates in the reporting carrier's network that ultimately originates/terminates to the BellSouth Network through another carrier's network shall be included in the reported PIU factor(s) by the intermediate carrier that accepts billing for the usage. This relationship is usually established per an agency authorization. In these situations, the carrier that accepts billing from BellSouth for the usage to and from BellSouth shall include such usage in their factor calculations that are reported to BellSouth. Any usage that transits a reporting carrier's network shall be included in the jurisdictional factor reporting by the billed carrier to the originating/terminating carrier regardless of the number of carriers involved in the transport of the traffic. It is incumbent upon the Party that is billed for traffic to report PIU factors that are representative of the actual jurisdiction of traffic delivered to the other Party.

2.2.2 For services that are not billed on a usage sensitive basis (e.g. Switched Transport Local Channel, Interoffice Channels & Multiplexing Equipment) the total use of the service shall be considered in determining the PIUE factor including originating and terminating usage.

2.3 BellSouth SWA FGD & Local Terminating PIU (TPIU)

2.3.1 Usage based rate elements are billed for FGD in both the originating and terminating directions. BellSouth is able to determine the jurisdiction of originating FGD traffic per the billing records generated with each call. Therefore a factor to apportion usage for originating FGD traffic is not required from the reporting carrier. Originating traffic consists of calls where the location of the calling number is served from a BellSouth end office that is connecting to a carrier for completion to the called number location.

2.3.2 The terminating usage shall be apportioned to the state and interstate jurisdictions per a TPIU factor. A single TPIU factor for terminating FGD traffic shall be reported at the state level to apportion the applicable usage based elements between the intrastate and interstate jurisdictions. Terminating party pays usage (e.g. 800 terminating traffic) shall be excluded from the TPIU calculations.

2.3.3 Local traffic shall also be included when determining the TPIU. If the reporting carrier functions as an Interexchange and Local carrier then all of the terminating usage sent to BellSouth will be apportioned between the state and interstate jurisdictions per a single TPIU. This factor shall be reported at the state level per Access Carrier Name Abbreviation (ACNA). A TPIU shall be reported by CLECs even if it does not terminate any interstate traffic to the BellSouth network. In this situation, the CLEC should report a TPIU equal to zero (0.00) to indicate that all of its traffic is Intrastate and Local.

2.3.4 The TPIU factor is calculated as follows where MOUs are billed minutes of use:

$$\frac{\text{Total Terminating Interstate MOUs}}{\text{Total Terminating Usage MOUs}}$$

2.3.5 Total Terminating Usage includes interstate, intrastate and local usage. This percentage is calculated on a statewide basis. Both Parties are required to report TPIU factors per their Access Carrier Name Abbreviations (ACNAs).

2.4 BellSouth SWA Transport PIUE

2.4.1 BellSouth SWA Transport PIUE is applicable to the following SWA Transport Services:

2.4.1.1 SWA Local Channel
2.4.1.2 SWA Dedicated Interoffice Channels
2.4.1.3 SWA Channelization Equipment
2.4.1.4 Local Interconnection Dedicated Transport
2.4.1.5 Dedicated End Office Trunk Port Service
2.4.1.6 Dedicated Tandem End Office Trunk Port Service
2.4.1.7 SWA Expanded Interconnection Cross-Connects

2.4.2 The PIUE may also be applied to other flat rated charges not specifically covered by other PIU categories.

2.4.3 The utilization of these transport services is considered in combination to determine the PIUE factors. The PIUE will be applied to the recurring billing elements for these services to apportion billing between the intrastate and interstate jurisdictions. The total jurisdictional use of these services shall be considered when determining PIUE factors including all originating and terminating usage. The PIUE represents the percentage that these services are utilized for interstate jurisdiction applications.

2.4.4 The PIUE factor is calculated as follows where MOUs are minutes of use:

$$\frac{\text{Total Applicable Terminating and Originating Interstate MOUs}}{\text{Total Applicable Terminating and Originating Usage MOUs}}$$

2.4.5 Total Applicable Terminating and Originating Usage includes interstate, intrastate and local usage. This percentage is calculated on a statewide basis. Both Parties are required to report PIUE factors per their Access Carrier Name Abbreviations (ACNAs).

2.5 PLU – Percent Local Usage

2.5.1 The percent of usage to be billed per the Local Interconnection contracts is determined by the PLU factor. This factor shall be developed in conjunction with the TPIU factor discussed in the previous subsection. After the TPIU is determined then the percentage of the intrastate usage that is local shall be determined. By definition, the percentage of intrastate traffic of the total terminating traffic is equal to 1 – TPIU. The total terminating traffic to be considered is discussed in the TPIU subsection. The PLU represents the percentage of intrastate terminating usage that is jurisdictionally local. This factor is reported at the state level by ACNA.

2.5.2 This factor is the percentage of intrastate terminating usage that is categorized as Local Jurisdiction. For purposes of this guide the total intrastate usage includes intrastate local usage and intrastate non-local usage. Terminating party pays usage shall be excluded

from the PLU calculations (same as TPIU, described above). The local jurisdiction, as defined in this Agreement, is calculated as follows where MOUs are billed minutes of use:

$$\frac{\text{Total Local Terminating MOUs}}{\text{Total Intrastate Terminating MOUs}}$$

2.5.3 The total intrastate terminating minutes can be determined by multiplying the total terminating minutes by (1- TPIU). Therefore the PLU may also be calculated as follows:

$$\frac{\text{Total Local Terminating MOUs}}{(\text{Total Terminating MOUs}) \times (1\text{-TPIU})}$$

2.5.4 This factor is calculated on a statewide basis by Access Carrier Name Abbreviation (ACNA).

2.6 PLF – Percent Local Facility

2.6.1 This factor is utilized to determined the portion of a Local Interconnection Dedicated Transport and Tandem/End Office Ports and various other flat rated services that are used to provide telephone and exchange service and exchange access. This factor is developed in conjunction with the PIUE. The PLF represents the percentage of the Intrastate use of these services that is jurisdictionally Local whereby the Intrastate percentage is defined as 1-PIUE. The total jurisdictional use of these services shall be considered when determining PLF and should include originating and terminating traffic. This factor is reported at the state level by ACNA

2.6.2 The PLF is the percentage of the intrastate use of Switched Dedicated Transport and/or Local Interconnection Transport that is jurisdictionally local. This factor is similar to PLU except that it applies to dedicated transport services that are billed on a non-usage sensitive basis. The PLF represents the percentage of use of all the Switched Dedicated Transport and Local Interconnection Transport provisioned by BellSouth that is jurisdictionally local as defined in this Agreement. The PLF for these services is based upon the usage that is transported by these services as follows:

$$\frac{\text{Total Local MOUs}}{\text{Total Intrastate MOUs}}$$

2.6.3 The total intrastate minutes can be determined by multiplying the total minutes by (1-PIUE) where PIUE is the factor applicable to Switched Dedicated Transports and Local Interconnection Transport. Therefore the PLF may also be calculated as follows:

$$\frac{\text{Total Local Minutes}}{(\text{Total Minutes}) \times (1\text{-PIUE})}$$

2.6.4 This factor may is calculated on a statewide basis and reported per Access Carrier Name Abbreviation (ACNA).

3 Frequency of Reporting

3.1 Jurisdictional factors shall be updated on a quarterly basis during the months of January, April, July and October. These updates shall be received no later than 30 days after the first day in each of these months. These factors shall represent the actual use for the three (3) previous months ending on the last day of December, March, June and September respectively. These updates shall be provided in writing by letter or electronic mail and sent to the following address:

US Mail

BellSouth Telecommunications, Inc
2300 Northlake Centre Drive
Suite 415
Tucker, GA 30084

OR

Electronic Mail

piu.reports@bellsouth.com

3.2 An e-mail will be returned indicating receipt of reports submitted by electronic mail.

3.3 The recommended format for updates is via the online form RF-3995 Jurisdictional Factor Report (see http://www.interconnection.bellsouth.com/forms/index.html, CLEC Forms Online or Interexchange Carrier Webforms).

3.4 In those instances where BellSouth has sufficient information to calculate jurisdictional factors for itself, BellSouth will notify the carrier, by letter or email, of the factors that will be used in billing, as well as the effective date. Unless otherwise notified, BellSouth will continue to update the specific identified factor(s) for subsequent quarters per the above schedule and the carrier will be exempt from further responsibility to report those specific factors.

Exhibit B

Basic Architecture

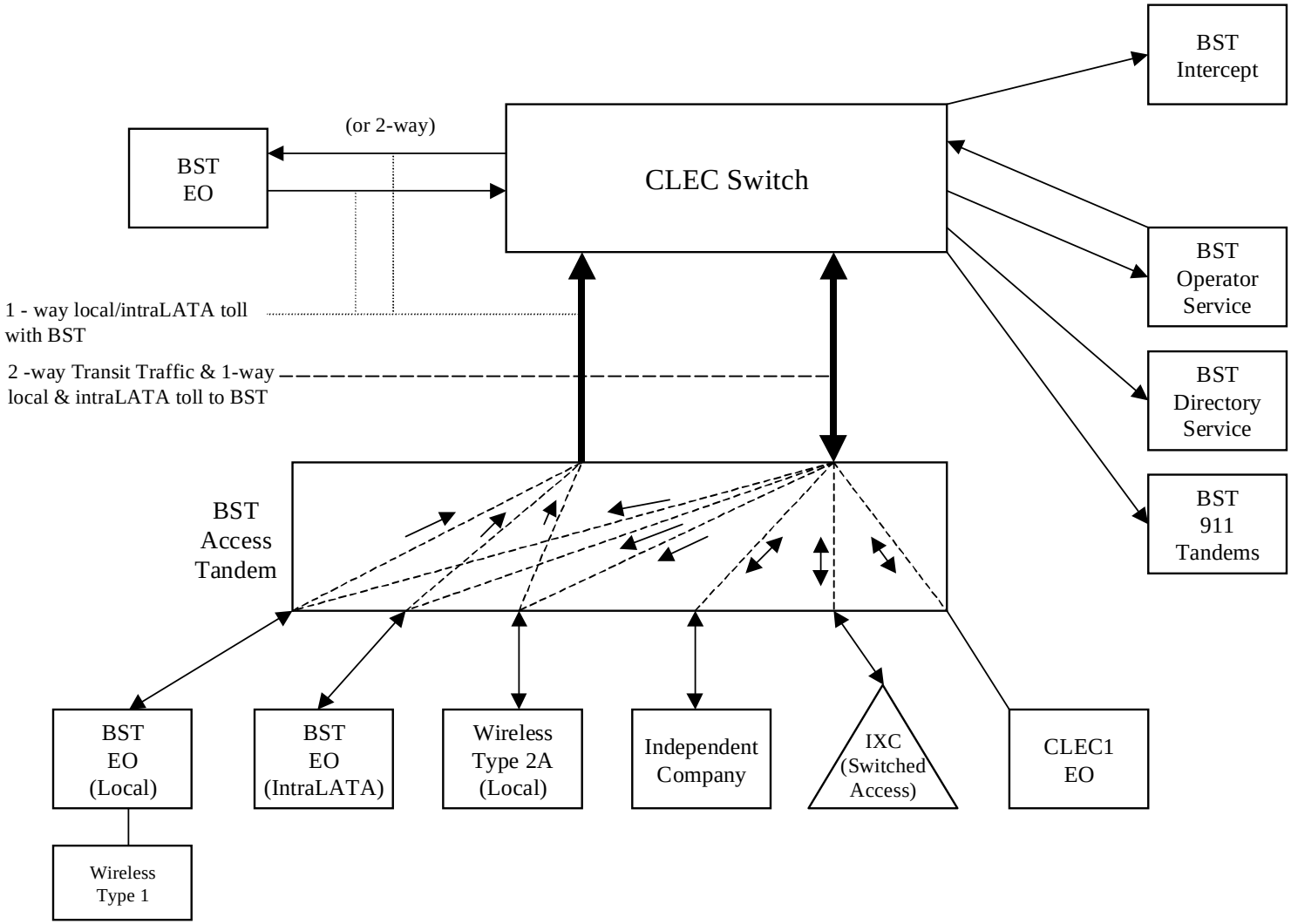

Exhibit C

Two-Way Architecture

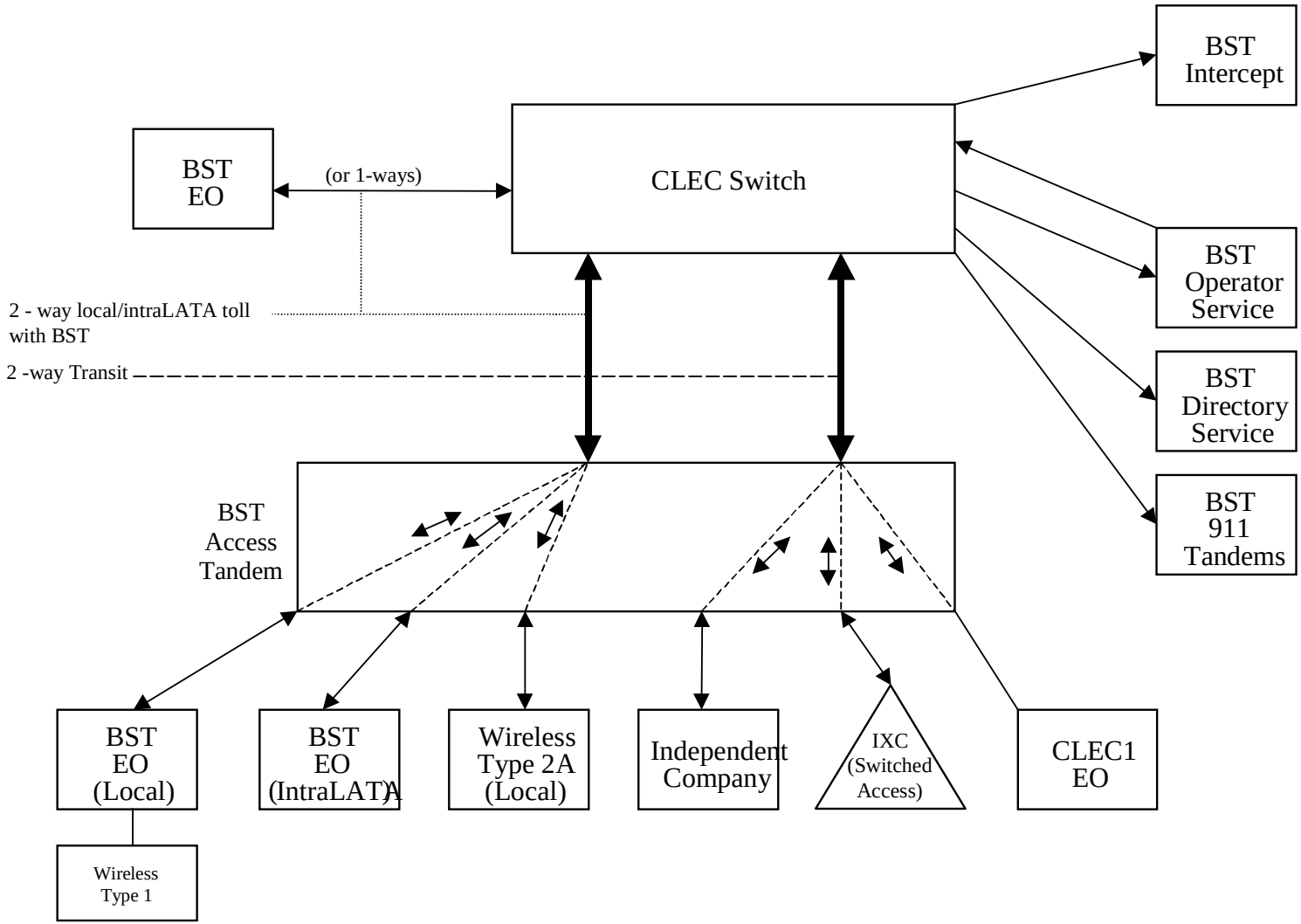

Exhibit D

Supergroup Architecture

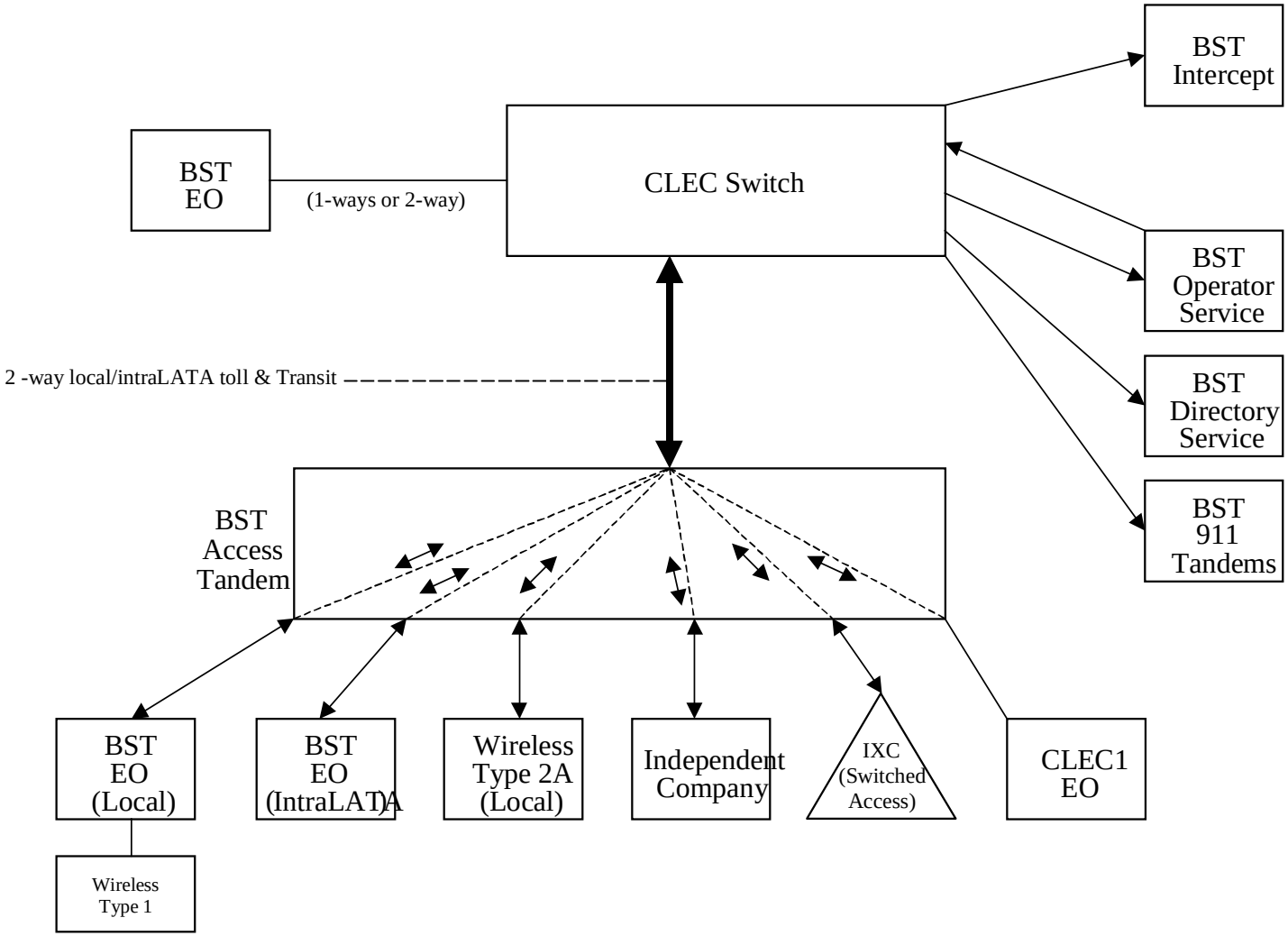

LOCAL INTERCONNECTION - South Carolina

Att: 3 Exh A

CATEGORY	RATE ELEMENTS	Interim	Zone	BCS	USOC	RATES($) Rec	Nonrecurring First	Nonrecurring Add'l	Nonrecurring Disconnect First	Nonrecurring Disconnect Add'l	Svc Order Submitted Elec per LSR	Svc Order Submitted Manually per LSR	Incremental Charge - Manual Svc Order vs. Electronic-1st	Incremental Charge - Manual Svc Order vs. Electronic-Add'l	Incremental Charge - Manual Svc Order vs. Electronic-Disc 1st	Incremental Charge - Manual Svc Order vs. Electronic-Disc Add'l
							OSS Rates($)									
							SOMEC	SOMAN	SOMAN	SOMAN	SOMAN	SOMAN				
LOCAL INTERCONNECTION (CALL TRANSPORT AND TERMINATION)																
	NOTE: "bk" beside a rate indicates that the Parties have agreed to bill and keep for that element pursuant to the terms and conditions in Attachment 3.															
	INTERCARRIER COMPENSATION FOR ISP-BOUND TRAFFIC															
	Rate for ISP-Bound Traffic, per MOU					0.0007										
	INTERCARRIER COMPENSATION FOR LOCAL TRAFFIC, LOCAL TRANSIT TRAFFIC, AND MTA TRAFFIC															
	END OFFICE SWITCHING															
	End Office Switching Function and Trunk Port, Per MOU					0.00127										
	TANDEM SWITCHING															
	Tandem Switching Function Per MOU					0.000736										
	Multiple Tandem Switching, per MOU (applies to intial tandem only)					0.000736										
	Local Intermediary Charge, per MOU (effective date - 12/31/2007)					0.0015										
	Local Intermediary Charge, per MOU (1/1/2008 - 12/31/2008)					0.0020										
	Local Intermediary Charge, per MOU (1/1/2009 - expiration)					0.0025										
	TRUNK CHARGE															
	Installation Trunk Side Service - per DS0			OHD	TPP6X		21.65bk	8.16bk								
	Installation Trunk Side Service - per DS0			OHD	TPP9X		21.65bk	8.16bk								
	Dedicated End Office Trunk Port Service-per DS0**			OHD	TDEOP	0.00										
	Dedicated End Office Trunk Port Service-per DS1**			OH1 OH1MS	TDE1P	0.00										
	Dedicated Tandem Trunk Port Service-per DS0**			OHD	TDWOP	0.00										
	Dedicated Tandem Trunk Port Service-per DS1**			OH1 OH1MS	TDW1P	0.00										
	**** This rate element is recovered on a per MOU basis and is included in the End Office Switching and Tandem Switching, per MOU rate elements**															
	COMMON TRANSPORT (Shared)															
	Common Transport - Per Mile, Per MOU					0.0000045										
	Common Transport - Facilities Termination Per MOU					0.0004095										
LOCAL INTERCONNECTION (DEDICATED TRANSPORT)																
	INTEROFFICE CHANNEL - DEDICATED TRANSPORT															
	Interoffice Channel - Dedicated Transport - 2-Wire Voice Grade - Per Mile per month			OHM	1L5NF	0.0167bk										
	Interoffice Channel - Dedicated Transport- 2- Wire Voice Grade - Facility Termination per month			OHM	1L5NF	24.30bk	40.63bk	27.47bk	16.77bk	6.91bk						
	Interoffice Channel - Dedicated Transport - 56 kbps - per mile per month			OHM	1L5NK	0.0167bk										
	Interoffice Channel - Dedicated Transport - 56 kbps - Facility Termination per month			OHM	1L5NK	16.76bk	40.63bk	27.47bk	16.77bk	6.91bk						
	Interoffice Channel - Dedicated Transport - 64 kbps - per mile per month			OHM	1L5NK	0.0167bk										
	Interoffice Channel - Dedicated Transport - 64 kbps - Facility Termination per month			OHM	1L5NK	16.76bk	40.63bk	27.47bk	16.77bk	6.91bk						
	Interoffice Channel - Dedicated Channel - DS1 - Per Mile per month			OH1, OH1MS	1L5NL	0.3415bk										
	Interoffice Channel - Dedicated Tranport - DS1 - Facility Termination per month			OH1, OH1MS	1L5NL	77.14bk	89.47bk	81.99bk	16.39bk	14.48bk						
	Interoffice Channel - Dedicated Transport - DS3 - Per Mile per month			OH3, OH3MS	1L5NM	8.02bk										
	Interoffice Channel - Dedicated Transport - DS3 - Facility Termination per month			OH3, OH3MS	1L5NM	880.65bk	279.37bk	163.12bk	60.33bk	58.59bk						
	LOCAL CHANNEL - DEDICATED TRANSPORT															
	Local Channel - Dedicated - 2-Wire Voice Grade per month			OHM	TEFV2	15.33bk	193.53bk	33.24bk	36.72bk	3.21bk						
	Local Channel - Dedicated - 4-Wire Voice Grade per month			OHM	TEFV4	16.54bk	193.97bk	33.68bk	37.19bk	3.68bk						
	Local Channel - Dedicated - DS1 per month			OH1	TEFHG	42.62bk	177.87bk	154.06bk	22.24bk	15.30bk						
	Local Channel - Dedicated - DS3 Facility Termination per month			OH3	TEFHJ	446.00bk	452.52bk	264.53bk	119.75bk	83.77bk						
	LOCAL INTERCONNECTION MID-SPAN MEET															
	Local Channel - Dedicated - DS1 per month			OH1MS	TEFHG	0.00	0.00									
	Local Channel - Dedicated - DS3 per month			OH3MS	TEFHJ	0.00	0.00									

LOCAL INTERCONNECTION - South Carolina														Att: 3 Exh A			
CATEGORY		RATE ELEMENTS	Interim	Zone	BCS	USOC	RATES($)					Svc Order Submitted Elec per LSR	Svc Order Submitted Manually per LSR	Incremental Charge - Manual Svc Order vs. Electronic-1st	Incremental Charge - Manual Svc Order vs. Electronic-Add'l	Incremental Charge - Manual Svc Order vs. Electronic-Disc 1st	Incremental Charge - Manual Svc Order vs. Electronic-Disc Add'l
							Rec	Nonrecurring		Nonrecurring Disconnect		OSS Rates($)					
								First	Add'l	First	Add'l	SOMEC	SOMAN	SOMAN	SOMAN	SOMAN	SOMAN
	MULTIPLEXERS																
		Channelization - DS1 to DS0 Channel System			OH1, OH1MS	SATN1	107.57bk	91.24bk	62.71bk	10.56bk	9.81bk						
		DS3 to DS1 Channel System per month			OH3, OH3MS	SATNS	144.02bk	178.54bk	94.18bk	33.33bk	31.90bk						
		DS3 Interface Unit (DS1 COCI) per month			OH1, OH1MS	SATCO	8.64bk	6.59bk	4.73bk								
SIGNALING (CCS7)																	
	NOTE:"bk" beside a rate indicates that the parties have agreed to bill and keep for that element pursuant to the terms and conditions in Attachment 3.																
		CCS7 Signaling Usage, Per TCAP Message					0.00bk										
		CCS7 Signaling Usage, Per ISUP Message					0.00bk										

ATTACHMENT 4

COLLOCATION

TABLE OF CONTENTS

1. Scope of Attachment **3**
2. Space Availability Report **6**
3. Collocation Options **6**
4. Occupancy **12**
5. Use of Collocation Space **13**
6. Ordering and Preparation of Collocation Space **19**
7. Provisioning **22**
8. Central Office Power **22**
9. Rates and Charges **30**
10. Insurance **33**
11. Mechanics Liens **34**
12. Inspections **35**
13. Security and Safety Requirements **35**
14. Destruction of Collocation Space **37**
15. Eminent Domain **38**
16. Nonexclusivity **38**
Exhibit A - Environmental And Safety Principles **39**
1. Categories For Consideration Of Environmental Issues **40**
2. Definitions **42**
3. Acronyms **42**
Exhibit B – Rates - Separate Attachment **44**
Exhibit C - Microwave Transmission Facilities In Conjunction With Physical Collocation **45**
1. Scope of Exhibit **45**
2. Provisioning of Microwave Transmission Facilities **46**
3. Application Process **48**
4, Preparation of Estimate/Application Response **48**
5, Pre-Design Meeting **50**
6. Responsibilities of the Parties **50**
7. Equipment Removal **51**
8. Collocation Attachment Provisions **51**

COLLOCATION

1 Scope of Attachment

1.1 This Attachment contains the rates, terms and conditions for physical collocation and virtual collocation within a BellSouth Premises. "BellSouth Premises" include BellSouth Central Offices and Serving Wire Centers; all buildings or similar structures owned, leased or otherwise controlled by BellSouth that house BellSouth's network facilities; all structures that house BellSouth facilities on public rights-of-way, including but not limited to, vaults containing loop concentrators or other similar structures; collocation of microwave transmission facilities on the rooftop of the aforementioned locations; "Remote Site Locations;" and all land owned, leased, or otherwise controlled by BellSouth that is adjacent to BellSouth's Central Offices, Serving Wire Centers, Remote Site Locations, building and structures. BellSouth's "Remote Site Locations" include terminals, cabinets, huts, controlled environmental vaults, owned, leased or otherwise controlled by BellSouth that house BellSouth network facilities. This Attachment is applicable to BellSouth Premises owned or leased by BellSouth in Kentucky and South Carolina. Where BellSouth notifies MCI that BellSouth's agreement with a third party prohibits BellSouth from providing access and use rights to others, upon MCI's request, BellSouth will use commercially reasonable efforts to obtain the third party's consent and to otherwise secure such rights. Upon MCI's request, BellSouth will provide documentation of the agreement and BellSouth's commercially reasonable efforts to obtain the third party's consent and to otherwise secure such rights. Nothing herein shall be construed as limiting MCI's rights to pursue remedies available to it.

1.2 Right to Occupy. BellSouth shall offer to MCI collocation on rates, terms, and conditions that are just, reasonable, non-discriminatory and comply with the rules of the FCC, including but not limited to lighting, ventilation, power, heat, air conditioning, and other environmental conditions for MCI's space and equipment. Subject to the rates, terms and conditions of this Attachment, where space is available and it is technically feasible, BellSouth will allow MCI to occupy a certain area designated by BellSouth within a BellSouth Premises, or on BellSouth property upon which the BellSouth Premises is located, of a size which is specified by MCI and agreed to by BellSouth (hereinafter "Collocation Space"). The necessary rates, terms and conditions for the premises as defined by the FCC, other than BellSouth Premises, shall be negotiated upon reasonable request for collocation at such premises.

1.2.1 Space Reservation. Neither BellSouth nor any of BellSouth's affiliates may reserve space for future use on more preferential terms than those set forth in this Attachment.

1.2.1.1 BellSouth and MCI may reserve space or rack/bay for their own specific uses for a maximum of twenty four (24) months.

1.2.1.2 BellSouth shall relinquish any space held for future use prior to denying a request by MCI for virtual collocation in accordance with 47 CFR §51.323(f)(5).

1.2.1.3 BellSouth shall not exclusively and unilaterally reserve previously conditioned space suitable for collocation.

1.3 Space Allocation. If available, BellSouth will offer MCI space that has already been prepared and conditioned for collocation. At a minimum, BellSouth's space allocation policies and practices must not: (a) materially increase MCI's collocation costs; (b) materially delay MCI's occupation and use of the Collocation Space; (c) impair the quality of service or otherwise limit the service MCI wishes to offer; or (d) reduce unreasonably the total space available for physical

collocation or preclude unreasonably physical collocation within the BellSouth Premises. Space within the BellSouth Premises or the BellSouth Premises property is generally suitable for physical collocation unless it is: (a) physically occupied by non-obsolete equipment; (b) assigned to another collocated telecommunications carrier in accordance with FCC rules; (c) used to provide physical access to occupied space; (d) used to enable technicians to work on equipment located within occupied space; (e) properly reserved for future use, either by BellSouth or another collocated telecommunications carrier; or (f) essential for the administration and proper functioning of the BellSouth Premises. BellSouth may segregate Collocation Space only if the proposed separated space is (a) available in the same or a shorter time frame as non-separated space; (b) at a cost not materially higher than the costs of non-separated space; and (c) is comparable, from a technical and engineering standpoint, to non-separated space. BellSouth may require employees and contractors of collocating carriers to use a central or separate entrance to BellSouth's building, provided, however, that its own employees are subject to the same restriction. BellSouth may construct or require MCI to construct a separate entrance to access physical Collocation Space only when: (a) construction of a separate entrance is technically feasible; (b) either legitimate security concerns, or operational constraints unrelated to BellSouth's or any of its affiliates' or subsidiaries' competitive concerns, warrant such separation; (c) construction of a separate entrance will not artificially delay collocation provisioning; or (d) construction of a separate entrance will not materially increase MCI's costs.

1.3.1 BellSouth will make every attempt to provide MCI with contiguous space for any subsequent request for physical Collocation Space, but makes no assurances that contiguous space will be available.

1.4 Space Reclamation. BellSouth will be allowed to reclaim unused Collocation Space pursuant to the procedure below, when the BellSouth Premises is at or near space exhaustion and MCI cannot demonstrate that it will utilize the space within a reasonable time. "Space exhaustion" and "legitimately exhausted" each denote when all space within a BellSouth Premises that can be used or is useful to locate telecommunications equipment in any of the methods of collocation available is exhausted or completely occupied. Before BellSouth may make a determination that space is exhausted or near exhaust, BellSouth must have removed all unused obsolete equipment from the BellSouth Premises and made such space available for collocation; however, removal of the equipment shall not cause an unreasonable delay in BellSouth's responses to MCI's application or in provisioning its collocation arrangements.

1.4.1 In the event of space exhaust or near exhaust within a BellSouth Premises, BellSouth must provide written notice to MCI requesting that it release non-utilized Collocation Space to BellSouth when one hundred percent (100%) of MCI's Collocation Space is not being utilized. MCI, within twenty (20) calendar days of receipt of the written notification from BellSouth, shall either, one, return the non-utilized Collocation Space to BellSouth in the same condition as when it was first occupied by MCI, with the exception of ordinary wear and tear, in which event MCI shall be relieved of all obligations for monthly recurring charges for that portion of the Collocation Space so released, or, two, provide BellSouth information to demonstrate that the space will be utilized within the timeframe set forth below in Section 1.4.1.1:

1.4.1.1 provide BellSouth information to demonstrate that the space will be utilized within twenty-four (24) months from the date BellSouth provided written notice to MCI requesting that it release the non-utilized Collocation Space.

1.4.2 At MCI's option, MCI may challenge BellSouth's claim that space is at or near exhaustion. If the Parties are not able to resolve a dispute regarding a BellSouth request for reclamation, the Parties shall use the dispute resolution process in this Agreement. Pending the outcome of the dispute resolution process, the space shall not be reclaimed.

1.4.3 In the event the structure or enclosure constructed on behalf of MCI is retained by BellSouth for reuse by another carrier, BellSouth shall reimburse MCI for any construction costs of the structure or enclosure incurred, paid by MCI and supported by a detailed vendor invoice.

1.5 Use of Space. MCI shall use the Collocation Space for the purpose of installing, maintaining and operating MCI's equipment (including testing and monitoring equipment) necessary for interconnection with BellSouth's services/facilities or for accessing BellSouth's unbundled network elements ("UNEs") for the provision of telecommunications services, as specifically set forth in this Agreement. In addition to, and not in lieu of, interconnection to BellSouth's services/facilities or access to BellSouth's UNEs, MCI may connect to itself and to other interconnectors within the BellSouth Premises (including to other virtual or physical collocated arrangements) through direct connects and co-carrier cross-connect facilities pursuant to sections 3.5 Direct Connect and 3.6 CCXC below.

1.6 Due Date. If any due date contained in this Attachment falls on a weekend or a National holiday, the due date will be the next business day thereafter. For intervals of ten (10) calendar days or less, National holidays will be excluded. For purposes of this Attachment, national holidays include the following: New Year's Day, Martin Luther King, Jr. Day, President's Day (Washington's Birthday), Memorial Day, Independence Day, Labor Day, Columbus Day, Veteran's Day, Thanksgiving Day, and Christmas Day.

1.7 Rates and Charges. MCI agrees to pay the rates and charges identified in Exhibit B attached hereto.

1.8 Compliance. Subject to Section 25 of the General Terms and Conditions of this Agreement, the Parties agree to comply with all applicable federal, state, county, local and administrative laws, rules, ordinances, regulations and codes in the performance of their obligations hereunder. Either party may seek, at its own cost, available waivers, alterations or exemptions from such laws, rules, ordinances, regulations or codes. If the requesting Party which seeks a waiver, alteration or exemption from such law, rule, ordinance, regulation or code, requests assistance from the non-requesting Party in seeking such waiver, alteration or exemption from a specific law, rule, ordinance, regulation or code, and there are specific costs incurred by the non-requesting Party to provide this assistance, then the non-requesting Party may seek reimbursement in providing its assistance from the requesting Party.

1.9 Transfer of Collocation Space. MCI shall be allowed to transfer Collocation Space to another CLEC under the following conditions: (1) the central office is not at or near space exhaustion; (2) the transfer of space shall be contingent upon BellSouth's approval, which will not be unreasonably withheld; (3) MCI has no unpaid, undisputed collocation charges (any disputed bills are governed by interconnection agreements and contracts which already exist between the parties); and (4) the transfer of the Collocation Space is in conjunction with MCI's sale of all, or substantially all, of the in-place collocation equipment to the same CLEC.

1.9.1 The responsibilities of MCI shall include: (1) submitting a letter of authorization to BellSouth for the transfer; (2) entering into a transfer agreement with BellSouth and the acquiring CLEC; and (3) returning all Security Access Devices to BellSouth. The responsibilities of the acquiring CLEC shall include: (1) submitting an application to BellSouth for the transfer of the Collocation Space; (2) satisfying all requirements of its interconnection agreement with BellSouth; (3) submitting a letter to BellSouth for the assumption of services; and (4) entering into a transfer agreement with BellSouth and MCI.

2 Space Availability Report

2.1 Upon request from MCI and at the MCI's expense, BellSouth will provide a written report (Space Availability Report) describing in detail the space that is currently available for collocation at a particular BellSouth Premises. This report will include the amount of Collocation Space available at the BellSouth Premises requested, the number of collocators present at the BellSouth Premises, any modifications in the use of the space since the last report on the BellSouth Premises requested and the measures BellSouth is taking to make additional space available for collocation arrangements. A Space Availability Report does not reserve space at the BellSouth Premises for which the Space Availability Report was requested by MCI.

2.1.1 The request from MCI for a Space Availability Report must be in writing and include the BellSouth Premises street address, as identified in the Local Exchange Routing Guide (LERG) and Common Language Location Identification (CLLI) code of the BellSouth Premises. CLLI code information is located in the National Exchange Carrier Association (NECA) Tariff FCC No. 4.

2.1.1.1 To obtain a CLLI code for a Remote Site Location directly from BellSouth, MCI should submit to BellSouth a Remote Site Interconnection Request (the Request) for the Serving Wire Center CLLI code prior to submitting its request for a Space Availability Report. MCI should complete all the requested information and submit the Request to BellSouth. BellSouth will bill the applicable fee upon receipt of the request.

2.1.2 BellSouth will respond to a request for a Space Availability Report for a particular BellSouth Premises within ten (10) calendar days of the receipt of such a request. For a Space Availability Report request when the request includes from two (2) to five (5) BellSouth Premises within the same state, or for a Space Availability Report request of more than five (5) BellSouth Premises whether the request are for the same state or for two or more states within the BellSouth region, BellSouth shall notify MCI and the Parties shall negotiate the period in which the Space Availability Report(s) will be provided.

2.2 BellSouth Remote Site DLEC Data (BRSDD) CD. Upon request, BellSouth will provide MCI with the following information concerning BellSouth's remote sites: (i) the address of the remote site; (ii) the CLLI code of the remote site; (iii) the carrier serving area of the remote site; (iv) the designation of which remote sites subtend to a particular central office; and (v) the number and address of customers that are served by a particular remote site.

2.2.1 BellSouth will provide this information on a first come, first served basis within thirty (30) calendar days of MCI's request subject to the following conditions: (i) the information will only be provided on a CD in the same format in which it appears in BellSouth's systems; (ii) the information will only be provided for each serving wire center designated by MCI, up to a maximum of thirty (30) wire centers per MCI request per month per state, and up to for a maximum of one hundred twenty (120) wire centers total per month per state for all CLECs; and (iii) MCI agrees to pay the costs, as set forth in Exhibit B, incurred by BellSouth in providing the information.

3 Collocation Options

3.1 Cageless. BellSouth shall allow MCI to collocate MCI's equipment and facilities without requiring the construction of a cage or similar structure. BellSouth shall allow MCI to have direct access to MCI's equipment and facilities in accordance with Section 5.16. BellSouth shall make cageless collocation available in single rack/bay increments. Except where MCI's equipment requires special technical considerations (e.g., special cable racking or isolated ground

plane), BellSouth shall assign cageless Collocation Space in conventional equipment rack lineups where feasible. For equipment requiring special technical considerations, MCI must provide the equipment layout, including spatial dimensions for such equipment pursuant to generic requirements contained in Telcordia GR-63-Core and shall be responsible for compliance with all special technical requirements associated with such equipment**.**

3.2 Caged. BellSouth will make caged Collocation Space available in fifty (50) square foot increments. Upon MCI's request and at MCI's expense, MCI will arrange with a Supplier certified by BellSouth (BellSouth Certified Supplier) to construct a collocation arrangement enclosure in accordance with BellSouth's specifications for wire mesh enclosures (BellSouth's wire mesh enclosures specifications) which will be provided to MCI and MCI's BellSouth Certified Supplier. The first CLEC in the BellSouth Premises will not be responsible for the entire cost of site preparation and security. Where local building codes require wire mesh enclosure specifications more stringent than BellSouth's wire mesh enclosure specifications, MCI and MCI's BellSouth Certified Supplier must comply with the more stringent local building code requirements. MCI's BellSouth Certified Supplier shall be responsible for filing and obtaining any and all necessary permits and/or licenses for such construction. BellSouth or BellSouth's designated agent or contractor shall provide, at MCI's expense, any documentation, including existing building architectural drawings, enclosure drawings, if requested by MCI, for MCI's BellSouth Certified Supplier to obtain all necessary permits and/or other licenses. MCI's BellSouth Certified Supplier shall bill MCI directly for all work performed for MCI to comply with this Attachment. BellSouth shall have no liability for, nor responsibility to pay, such charges imposed by MCI's BellSouth Certified Supplier. MCI must provide the local BellSouth Central Office Building Contact with two (2) Access Keys that will allow entry into the locked enclosure. Except in the case of an emergency, BellSouth will not access MCI's locked enclosure prior to notifying MCI at least forty-eight (48) hours or two (2) business days, whichever is greater, before access to the Collocation Space is required. MCI may elect to be present whenever BellSouth enters the Collocation Space for the purpose of making BellSouth equipment and building modifications (e.g., running, altering or removing racking, ducts, electrical wiring, HVAC, and cables). The Parties agree that MCI will not bear any of the expense associated with work that is done by BellSouth for BellSouth equipment and building modifications**.** Upon request, BellSouth shall construct the enclosure for MCI.

3.2.1 BellSouth may elect to review MCI's plans and specifications prior to allowing construction to start, to ensure compliance with BellSouth's wire mesh enclosure specifications. BellSouth will notify MCI of its desire to execute this review in BellSouth's response to the Initial Application, if MCI has indicated its desire to construct its own enclosure. If MCI's Initial Application does not indicate its desire to construct its own enclosure, and MCI subsequently decides to construct its own enclosure prior to the BellSouth Application Response, as defined in Section 6.10 of this Attachment, then MCI will resubmit its application, indicating its desire to construct its own enclosure. If MCI subsequently decides to construct its own enclosure after the bona fide firm order (hereinafter "BFFO") has been accepted by BellSouth, MCI will submit a Subsequent Application, as defined in Section 6.2 of this Attachment. If BellSouth elects to review MCI's plans and specifications, then BellSouth will provide notification within ten (10) calendar days after the BFFO date or, if a Subsequent Application is submitted as set forth in the preceding sentence, then the Subsequent Application BFFO date. BellSouth shall complete its review within fifteen (15) calendar days after the receipt of MCI's plans and specifications. Regardless of whether or not BellSouth elects to review MCI's plans and specifications, BellSouth reserves the right to inspect the enclosure after construction has been completed to ensure that it is constructed according to MCI's submitted plans and specifications and/or BellSouth's wire mesh enclosure specifications, as applicable. If BellSouth decides to inspect the constructed Collocation Space, BellSouth will complete its inspection within fifteen (15) calendar days after receipt of written notification of completion of the enclosure from MCI. BellSouth shall require

MCI to remove or correct within fifteen (15) calendar days, at MCI's expense, any structure that does not meet MCI's plans and specifications or BellSouth's wire mesh enclosure specifications, as applicable.

3.3 MCI shall not enter into any Host/Guest relationship without prior written consent of BellSouth and such consent shall require, at a minimum, amending the interconnection agreement to incorporate the rates, terms and conditions that are available at the time of MCI's request, pursuant to Section 251 of the Act, and FCC and Commission rules and orders.

3.4 Adjacent Collocation. Subject to technical feasibility and space availability, BellSouth will permit an adjacent collocation arrangement ("Adjacent Arrangement") on BellSouth Premises property only when space within the requested BellSouth Premises is legitimately exhausted and where the Adjacent Arrangement does not interfere with access to existing or planned structures or facilities on the BellSouth Premises property. Except as otherwise provided for in this Attachment, BellSouth shall provide adjacent collocation pursuant to the same terms and conditions as those applicable to physical collocation noted in this Attachment. BellSouth will designate the location of the space where the adjacent structure (such as a CEV or similar structure) will be placed. For a remote site Adjacent Arrangement BellSouth will require detailed drawings of MCI's proposed structure that will provide height, width and depth of the proposed structure as well as any proposed cabling necessary to connect to the BellSouth remote site and any power requirements MCI will need to power its structure. Additionally, BellSouth must be provided with any special requirements that MCI may request, to determine if BellSouth can provide such special requirements. An Adjacent Arrangement shall be procured by MCI or constructed by MCI's BellSouth Certified Supplier, pursuant to design and construction specifications to be negotiated between the Parties ("BellSouth's Adjacent Collocation Specifications") which will not be inconsistent with the terms and conditions of this Attachment. Further, MCI shall construct, procure, maintain and operate said Adjacent Arrangement(s) pursuant to all of the rates, terms and conditions set forth in this Attachment. Additional rates, where applicable, shall be negotiated at the time of the application for Adjacent Collocation.

3.4.1 Where local building codes require enclosure specifications more stringent than BellSouth's Adjacent Collocation Specifications, MCI and MCI's BellSouth Certified Supplier shall comply with the more stringent local building code requirements. MCI's BellSouth Certified Supplier shall be responsible for filing and receiving any and all necessary zoning, permits and/or licenses for such construction. MCI's BellSouth Certified Supplier shall bill MCI directly for all work performed for MCI to comply with this Attachment. BellSouth shall have no liability for, nor responsibility to pay, such charges imposed by MCI's BellSouth Certified Supplier. MCI must provide the local BellSouth Central Office Building Contact with two (2) cards, keys or other access devices used to gain entry into the locked enclosure**.** The requirements for access described in Section 3.2 (Caged) apply with regard to access to adjacent collocation.

3.4.2 MCI must submit its Adjacent Arrangement construction plans and specifications to BellSouth when it places its firm order. BellSouth shall review MCI's plans and specifications prior to the construction of an Adjacent Arrangement(s) to ensure MCI's compliance with BellSouth's Adjacent Collocation Specifications stated in Section 3.4 above. BellSouth shall complete its review within fifteen (15) calendar days after receipt of the plans and specifications from MCI for the Adjacent Arrangement. BellSouth may inspect the Adjacent Arrangement during and after construction is completed to ensure that it is constructed according to MCI's submitted plans and specifications. If BellSouth decides to inspect the completed Adjacent Arrangement, BellSouth will complete its inspection within fifteen (15) calendar days after receipt of written notification of completion of structure from MCI. BellSouth shall require MCI to remove or correct within fifteen (15) calendar days, at MCI's expense, any structure that does not meet its submitted plans and specifications or the aforesaid BellSouth Specifications.

3.4.3 MCI shall provide a concrete pad, the structure housing the arrangement, heating/ventilation/air conditioning (HVAC), lighting, and all of the facilities that connect the structure (i.e., racking, conduits, etc.) to the BellSouth point of demarcation. On a non-discriminatory basis, BellSouth shall provide an AC or DC power source, at MCI's option. BellSouth will provide DC power to adjacent collocation space at MCI's request where technically feasible and in accordance with applicable law. BellSouth will provide DC power in an adjacent enclosure upon completion of negotiations between the Parties on the applicable rates and intervals. MCI will pay for any and all DC power construction and provisioning costs to MCI's adjacent collocation space through individual case basis (ICB) pricing that must be paid fifty percent (50%) upfront and fifty percent (50%) at completion of the DC installation work to the adjacent structure. MCI's BellSouth Certified Supplier shall be responsible, at MCI's sole expense, for filing and obtaining any and all necessary permits and/or licenses for an Adjacent Arrangement. BellSouth shall allow Subleased Caged Collocation within an Adjacent Arrangement, pursuant to the terms and conditions set forth in Section 3.3 above.

3.4.4 Subject to MCI being on the waiting list described in section 6.7 below, in the event that space within a Central Office or Serving Wire Center becomes available, BellSouth will provide the option to MCI to relocate its equipment from an Adjacent Arrangement into said space. In the event MCI chooses to relocate its equipment into the space, appropriate charges applicable for collocation within the BellSouth Premises will apply.

3.5 Direct Connects and Co-Carrier Cross-Connects.

3.5.1 Direct Connects. BellSouth will permit MCI to directly interconnect between its own virtual/physical Collocation Space within the same Central Office or Serving Wire Center by utilizing a Direct Connect. MCI shall contract with a BellSouth Certified Supplier to place the Direct Connect, which shall be provisioned using facilities owned by MCI. MCI-provisioned DC's shall utilize BellSouth common cable support structure. There will be a recurring charge per linear foot, per cable, of the actual common cable support structure used by MCI to provision the Direct Connects between its virtual/physical Collocation Spaces. In those instances where MCI's virtual/physical Collocation Space is contiguous in the central office, MCI will have the option of using MCI's own technicians to deploy the Direct Connects using either electrical or optical facilities between its Collocation Spaces by constructing its own dedicated cable support structure. MCI will deploy such electrical or optical connections directly between its own facilities without being routed through BellSouth's equipment. MCI may not self-provision Direct Connects on any BellSouth distribution frame, POT, DSX (Digital System Cross-Connect) or LGX (Light Guide Cross-Connect). MCI is responsible for ensuring the integrity of the signal.

3.5.1.1 To place an order for Direct Connects, MCI must submit an Initial Application or Subsequent Application. If no modification to the Collocation Space is requested other than the placement of Direct Connects, the Application Fee for CCXC/Direct Connects, as defined in Exhibit B, will apply. If other modifications, in addition to the placement of Direct Connects are requested, either an Initial Application Fee or Subsequent Application Fee will apply, pursuant to Section 6.3 of this Attachment. This nonrecurring fee will be billed by BellSouth on the date that BellSouth provides an Application Response to MCI.

3.5.2 Co-Carrier Cross-Connect (CCXC). A Co-Carrier Cross-Connect (CCXC) is a cross-connection between MCI and another collocated telecommunications carrier, other than BellSouth, in the same Central Office or Serving Wire Center. BellSouth will permit MCI to interconnect between its virtual or physical collocation arrangement(s) and that (those) of another (or other) collocated telecommunications carrier(s) within the same BellSouth CO or SWC via a CCXC, pursuant to

the FCC's Rules. The other collocated telecommunications carrier's agreement must contain CCXC rates, terms and conditions before BellSouth will permit the ordering and provisioning by the other carrier of a CCXC between the two (2) collocated carriers. The applicable BellSouth charges will be assessed to the requesting collocated telecommunications carrier. MCI shall not use the Collocation Space for the sole or primary purpose of cross-connecting to other collocated telecommunications carriers.

3.5.2.1 MCI, as the requesting carrier, must contract with a BellSouth Certified Supplier to place the CCXC. The CCXC shall be provisioned using facilities owned by MCI or by the other collocated telecommunications carrier(s)**.** Such cross-connections to other collocated telecommunications carriers may be made using either electrical or optical facilities. MCI shall be responsible for providing a letter of authorization ("LOA"), with the application, to BellSouth from the other collocated telecommunications carrier to which it will be cross-connecting. MCI shall deploy such connections directly between its own facilities and the facilities of other Interconnector(s) without being routed through BellSouth equipment. Except in the case of contiguous caged collocation arrangements, the MCI-provisioned CCXC shall utilize BellSouth common cable support structure. In the case of contiguous caged collocation arrangements, MCI has the option of using its own technicians to install co-carrier cross-connects using either electrical or optical facilities between the equipment of both collocated telecommunications carriers and of constructing its own dedicated support structure, within MCI's Collocation space; otherwise, BellSouth common cable support structure will be used. There will be a recurring charge per linear foot, per cable, of common cable support structure used by MCI to provision the CCXC to the other collocated telecommunications carrier. MCI shall not provision CCXC on any BellSouth distribution frame, POT (Point of Termination) Bay, DSX (Digital System Cross-Connect) or LGX (Light Guide Cross-Connect). MCI is responsible for ensuring the integrity of the signal.

3.5.2.2 To place an order for CCXCs, MCI must submit an Initial Application or, if requested following the initial installation**,** a Subsequent Application to BellSouth. If no modification to the Collocation Space is requested other than the placement of CCXC the Application Fee for CCXC/Direct Connect, as defined in Exhibit B, will apply. If other modifications, in addition to the placement of CCXCs, are requested, either an Initial Application or Subsequent Application Fee will apply, pursuant to Section 6.3 of this Attachment. BellSouth will bill this nonrecurring fee on the date that it provides an Application Response to MCI.

3.6 Microwave Collocation. Where technically feasible, and not otherwise prohibited by law, BellSouth will provide for physical collocation of MCI's microwave transmission facilities, consistent with 47 C.F.R. 51.323, on the rooftops of BellSouth's central office buildings, pursuant to the terms, rates and conditions in Exhibit C.

3.7 Virtual Collocation

3.7.1 Virtual Collocation will be made available according to the terms and conditions described in BellSouth's FCC Tariff No. 1. BellSouth shall provide Virtual Collocation at the rates set forth in Exhibit B of this Attachment. If there are any inconsistencies between BellSouth's FCC Tariff No. 1 and this Agreement, this Agreement shall control.

3.7.2 Virtual collocation means MCI will provide and will lease to BellSouth transmission equipment dedicated to MCI's use. MCI will be responsible for monitoring and controlling MCI circuits terminating at BellSouth's premises. Once space preparation is complete and upon MCI's request, BellSouth shall contract with a BellSouth certified vendor to install all equipment and facilities in accordance with BellSouth's guidelines and Specifications. MCI shall be responsible for all costs of the vendor's installation in addition to BellSouth's charges for overseeing and

otherwise handling the installation. MCI shall be responsible for all engineering associated with the installation and the provisioning of all equipment, necessary supplies and related documentation. BellSouth's obligations to install the equipment shall not begin until MCI has provided all of the above to BellSouth. BellSouth will maintain and repair such equipment under the same intervals and with the same or better failure rates for performance of similar functions for comparable BellSouth equipment. Maintenance includes the change out of electronic cards provided by MCI.

3.7.3 MCI may purchase the equipment from third parties, and will not be required to purchase the equipment from BellSouth.

3.7.4 To the extent BellSouth is required to provide virtual collocation outside the central office, BellSouth will provide unbundled transport and sub-loops in accordance with the terms of this agreement.

3.7.5 BellSouth will make available electrical and optical cross-connects for virtual collocation at the rates contained in Exhibit B of this Attachment.

3.8 Remote Site Collocation

3.8.1 BellSouth shall offer to MCI remote Collocation Space subject to the rates contained in Exhibit B of this Attachment, where space is available and collocation is technically feasible. Remote Site Collocation is the placement of MCI owned facilities and equipment in BellSouth remote sites. Equipment ownership, maintenance and insurance are the responsibility of MCI or their approved agent.

3.8.2 For equipment requiring special technical considerations, MCI must provide the equipment layout, including spatial dimensions for such equipment pursuant to the generic requirements contained in Telcordia GR-63-Core, and shall be responsible for compliance with all special technical requirements associated with such equipment pursuant to Sections 3.8.3 and 3.8.4 following.

3.8.3 MCI may elect to connect to a feeder line by submitting a service inquiry for that UNE to the Complex Resale Support Group, as follows:

3.8.3.1 connection to a BellSouth feeder line (when technically feasible) is achieved via cross-connects located near the BellSouth equipment inside the Remote Site Location. In this case, the point of demarcation is the DSX, feeder distribution interface, or LGX panel in the Remote Site Location

3.8.3.2 connection of the MCI owned or leased entrance facilities into the Remote Site Collocation Space from MCI's own point of presence is permitted. However, BellSouth will designate the point of entrance at the Remote Site location housing the Collocation Space, so that it is physically accessible to both Parties.

3.8.4 Distribution lines will be accessed through MCI's provision of a copper cable through a conduit from the Remote Site Collocation Space to the feeder distribution interface of sufficient length for splicing. BellSouth will splice this cable to the distribution cable at the feeder distribution interface in twenty-five (25) pair increments.

3.9 Virtual Collocation in the Remote Site. Virtual Collocation provides for the placement of MCI owned equipment and facilities in a BellSouth Remote Site. BellSouth shall offer to MCI remote Collocation Space subject to the rates contained in Exhibit B of this Attachment, where space is available and collocation is technically feasible. The minimum amount of space offered for a

virtual collocation arrangement is one (1) rack/bay. BellSouth will lease MCI's entrance fiber or cable (to include copper) cabling and equipment for the nominal fee of one dollar. MCI's certified supplier will install the equipment. BellSouth will then be responsible for performing all installation, maintenance and repair of the Virtual in the Remote Site plug-ins, when MCI requests such work via a Service Order or Maintenance ticket.

3.10 Other Collocation Arrangements. A previously successful method of obtaining interconnection or access to unbundled network elements at a particular premises or point on any incumbent LEC's network is substantial evidence that such method is technically feasible in the case of substantially similar network premises or points. A requesting telecommunications carrier seeking a particular collocation arrangement either physical or virtual is entitled to a presumption that such arrangement is technically feasible if any LEC has deployed such collocation arrangement in any incumbent LEC premises.

4 Occupancy

4.1 Space Ready Notification. BellSouth will notify MCI in writing when the Collocation Space is ready for occupancy (Space Ready Date).

4.2 Acceptance Walk Through. MCI will schedule and complete an acceptance walkthrough of new or additional provisioned Collocation Space with BellSouth within fifteen (15) calendar days of the Space Ready Date. BellSouth will correct any deviations in MCI's original or jointly amended application within seven (7) calendar days after the walkthrough, unless the Parties mutually agree upon a different time frame. BellSouth will then establish a new Space Ready Date. Another acceptance walkthrough will be scheduled and conducted within fifteen (15) calendar days of the new Space Ready Date. This follow-up acceptance walkthrough will be limited to only those deviations identified in the initial walkthrough. If MCI completes its acceptance walkthrough within the fifteen (15) calendar day interval associated with the new Space Ready Date, billing will begin upon the date of MCI's acceptance of the Collocation Space (Space Acceptance Date). In the event MCI fails to complete an acceptance walkthrough within the fifteen (15) calendar day interval associated with the applicable Space Ready Date, the Collocation Space shall be deemed accepted by MCI on the Space Ready Date and billing will commence from that date.

4.3 Early Space Acceptance. If MCI decides to occupy the Collocation Space prior to the Space Ready Date, the date MCI occupies the space is deemed the Space Acceptance Date and billing will begin from that date. MCI must notify BellSouth in writing that its collocation equipment installation is complete. MCI's collocation equipment installation is complete when it has been cross-connected to BellSouth's network for the purpose of provisioning telecommunication services to its customers. BellSouth may, at its discretion, refuse to accept any orders for cross-connects until it has received such notice.

4.4 Termination of Occupancy. In addition to any other provisions addressing termination of occupancy in this Agreement, MCI may terminate its occupancy of a particular Collocation Space by submitting a Subsequent Application or a Remote Site Application requesting termination of occupancy. . The termination of such Collocation Space shall be effective and billing for monthly recurring charges will cease on the date that MCI and BellSouth conduct an inspection of the terminated space and jointly sign off on the Space Relinquishment Form or on the date that MCI signs off on the Space Relinquishment Form and send this form to BellSouth., provided MCI has complied with all provisions of the Space Relinquishment Form A Remote Site Application Fee or Subsequent Application Fee will not apply for the termination of occupancy; however, specific disconnect fees may apply to certain rate elements. The particular disconnect fees that would apply are contained in Exhibit B of this Attachment.

4.4.1 BellSouth may terminate MCI's right to occupy the Collocation Space in the event MCI fails to comply with any material provision directly related to Collocation in this Agreement provided BellSouth gives MCI thirty (30) calendar days' prior written notice of the failure to comply and gives MCI an opportunity to cure during such period. Notwithstanding the above, any termination for non-payment of applicable fees, shall be in accordance with Attachment 7, Billing.

4.4.2 Upon termination of occupancy, MCI, at its sole expense, shall remove its equipment and any other property owned, leased or controlled by MCI from the Collocation Space. MCI shall have thirty (30) calendar days ("Removal Date") from the Subsequent Application or Remote Site Application BFFO date to complete such removal. .

4.4.3 MCI shall continue the payment of all monthly recurring charges to BellSouth until the date MCI has fully vacated the Collocation Space and the Space Relinquishment Form has been accepted by BellSouth. If MCI fails to vacate the Collocation Space within thirty (30) calendar days from the Removal Date, BellSouth shall have the right to remove and dispose of the equipment and any other property of MCI, in any manner that BellSouth deems fit, at MCI's expense and with no liability for MCI's property.

4.4.4 Upon termination of MCI's right to occupy specific Collocation Space, the Collocation Space will revert to BellSouth's space inventory, and, unless and to the extent the structure or enclosure is retained by BellSouth pursuant to Section 1.4.3 of this Attachment, MCI shall surrender the Collocation Space to BellSouth in the same condition as when it was first occupied by MCI, with the exception of ordinary wear and tear, unless otherwise agreed to by the Parties. MCI's BellSouth Certified Supplier shall be responsible for updating and making any necessary changes to BellSouth's records as required by BellSouth's Specifications including, but not limited to, BellSouth's Central Office Record Drawings and ERMA Records. MCI shall be responsible for the cost of removing any MCI constructed enclosure, together with any supporting structures (e.g., racking, conduits, or power cables), by the Removal Date and restoring the grounds to their original condition

5 Use of Collocation Space

5.1 Equipment Type.

5.1.1 BellSouth shall permit the collocation and use of any equipment necessary for interconnection to BellSouth's network or access to BellSouth's unbundled network elements in the provision of telecommunications services, as the term "necessary" is defined by FCC 47 C.F.R. Section 51.323 (b) and the FCC's Fourth Report and Order in CC Docket No. 98-147. Collocation of multi-functional equipment shall comply with FCC 47 C.F.R. Section 51.323 (b) (3) and the FCC's Fourth Report and Order in CC Docket No. 98-147.

5.1.2 If, in BellSouth's opinion, equipment MCI seeks to collocate is not necessary for interconnection or access to unbundled network elements, BellSouth shall inform MCI in writing within the time period set forth in Section 6.9 of this Attachment. If disagreement exists between the Parties regarding the equipment MCI seeks to collocate is necessary for interconnection or access to unbundled network elements pursuant to FCC rules, either Party may seek to resolve the issue pursuant to the dispute resolution provisions of this Agreement.

5.1.3 BellSouth may not object to the collocation of equipment on the grounds that the equipment does not comply with safety or engineering standards that are more stringent than the safety or engineering standards that BellSouth applies to its own equipment. BellSouth may not object to

the collocation of equipment on the ground that the equipment fails to comply with Network Equipment and Building Specifications performance standards or any other performance standards. If BellSouth denies collocation of MCI's equipment, citing safety standards, BellSouth must provide to MCI within five (5) business days of the denial a list of all equipment that BellSouth locates at the premises in question, together with an affidavit attesting that all of that equipment meets or exceeds the safety standard that Bellsouth contends MCI's equipment fails to meet. This affidavit must set forth in detail: the exact safety requirement that MCI's equipment does not satisfy; BellSouth's basis for concluding that MCI's equipment does not meet this safety requirement; and BellSouth's basis for concluding why collocation of equipment not meeting this safety requirement would compromise network safety. MCI will be given ten (10) calendar days to comply with the safety requirements or remove the equipment from the Collocation Space. If the Parties do not resolve the dispute, BellSouth or MCI may file a complaint at the Commission seeking a formal resolution of the dispute.

5.1.4 All MCI Remote Site equipment installation shall comply with BellSouth TR 73503-11h, "Grounding – Engineering Procedures". Metallic cable sheaths and metallic strength members of optical fiber cables as well as the metallic cable sheaths of all copper conductor cables shall be bonded to the designated grounding bus for the Remote Site Location. All copper conducted pairs, working and non-working, shall be equipped with a solid-state protector unit (over-voltage protection only), which has been listed by a nationally recognized testing laboratory.

5.2 Facility Terminations. Where available, applicable, and technically feasible, pursuant to Section 5.2.1 below, BellSouth shall provide intraoffice facilities (e.g., DS0, DS1, DS3, and optical terminations) as requested by MCI to meet MCI's need for placement of equipment, interconnection, or provision of service.

5.2.1 MCI shall not request more DS0, DS1, DS3 and optical terminations for a collocation arrangement than the total port or termination capacity of the equipment physically installed in the arrangement. The total capacity of the equipment collocated in the arrangement will include equipment contained in an application, as well as equipment already placed in the collocation arrangement. If full network termination capacity of the equipment being installed is not requested in the application, additional network terminations for the installed equipment will require the submission of another application. In the event MCI submits an application for terminations that will exceed the total capacity of the collocated equipment, MCI will be informed of the discrepancy by BellSouth and required to submit a revision to the application.

5.3 MCI will, upon request to MCI Collocation Senior Staff Specialist, Phillip Bomer, at 6 Concourse Parkway, Atlanta, GA 30328 applicable to this Attachment, within thirty (30) days of the request, provide a report to ICS Collocation Product Management, Room 34A55, 675 W. Peachtree Street, Atlanta, Georgia 30375 listing any equipment in the Collocation Space that was added during the period specified in the request, for which there is a UCC-1 lien holder. This shall be defined as "Secured Equipment".

5.4 MCI shall not use the Collocation Space for marketing purposes, nor shall it place any identifying signs or markings outside the Collocation Space or on the grounds of the BellSouth Premises.

5.5 MCI shall place a plaque or affix other identification (e.g., stenciling) to MCI's equipment, including the appropriate emergency contacts with their corresponding telephone numbers, in order for BellSouth to properly identify MCI's equipment in the case of an emergency.

5.6 Entrance Facilities. MCI may elect to place MCI-owned or MCI-leased fiber entrance facilities into its Collocation Space. BellSouth will designate the point of interconnection in close proximity to the BellSouth Premises building housing the Collocation Space, such as at an

entrance manhole or a cable vault, which are physically accessible by both Parties. MCI will provide and place fiber cable at the point of entrance of sufficient length to be pulled through BellSouth conduit and into the splice location by BellSouth.

5.6.1 MCI will provide and install a sufficient length of fire retardant riser cable, to which BellSouth will splice the entrance cable. The fire retardant riser cable will extend from the splice location to MCI's equipment in the Collocation Space. In the event MCI utilizes a non-metallic, riser-type entrance facility, a splice will not be required. MCI must contact BellSouth for authorization and instruction prior to placing any entrance facility cable in the manhole. MCI is responsible for the maintenance of the entrance facilities.

5.7 Remote Site Entrance Facilities. MCI may elect to place MCI-owned or MCI-leased fiber entrance facilities into the Remote Collocation Space. BellSouth will designate the point of interconnection at the Remote Location housing the Remote Collocation Space, which is physically accessible by both Parties. MCI will provide and place copper cable through conduit from the Remote Collocation Space to the Feeder Distribution Interface to the splice location of sufficient length for splicing by BellSouth. MCI must contact BellSouth for instructions prior to placing the entrance facility cable. MCI is responsible for maintenance of the entrance facilities.

5.8 Microwave Entrance Facilities. At MCI's request, BellSouth will accommodate, where technically feasible and space is available, a microwave entrance facility, pursuant to separately negotiated terms and conditions set forth in Exhibit C to this Attachment.

5.9 Copper and Coaxial Cable Entrance Facilities.

5.9.1 Intentionally Omitted.

5.9.2 Intentionally Omitted.

5.9.3 In the case of adjacent collocation, copper facilities may be used between the adjacent collocation arrangement and the Central Office demarcation point, unless BellSouth determines that limited space is available for the placement of these entrance facilities.

5.10 Dual Entrance Facilities. BellSouth will provide at least two interconnection points at each Premises where at least two (2) such interconnection points are available and capacity exists. Upon receipt of a request by MCI for dual entrance facilities to its physical Collocation Space, BellSouth shall provide MCI with information regarding BellSouth's capacity to accommodate the requested dual entrance facilities. Where dual entrance facilities are not available due to lack of capacity, BellSouth will provide this information to MCI in the Application Response. If BellSouth states in the Application Response that dual entrance is not available due to lack of capacity, BellSouth will allow MCI, upon request, to inspect the facility that BellSouth claims is at capacity within ten (10) business days of such notification. In order to schedule said inspection within ten (10) business days, the request for an inspection must be received by BellSouth within five (5) business days of the notification of lack of capacity. Any request received by BellSouth later than five (5) business days after MCI's receipt of BellSouth's application Response will be fulfilled within five (5) business days of the request. In addition, BellSouth shall notify MCI via Carrier Notification and the Collocation Manager (via email to an address supplied by MCI), of the date dual entrance facilities will become available in a central office where dual facilities previously were not available.

5.11 Shared Use. MCI may utilize spare capacity on an existing interconnector's entrance facility for the purpose of providing an entrance facility to MCI's Collocation Space within the same BellSouth Premises. In a Central Office, BellSouth shall allow the splice, as long as the fiber is

non-working dark fiber. MCI must arrange with BellSouth in accordance with BellSouth's Special Construction Procedures, RL93-11-030BT, and provide a LOA from the other telecommunications carrier authorizing BellSouth to perform the splice of the MCI-provided riser cable to the spare capacity on the entrance facility. If MCI desires to allow another telecommunications carrier to use its entrance facilities, the other telecommunications carrier must arrange with BellSouth in accordance with BellSouth's Special Construction Procedures, RL93-11-030BT, and provide a LOA from MCI authorizing BellSouth to perform the splice of the telecommunications carrier's provided riser cable to the spare capacity on MCI's entrance facility. BellSouth will allow MCI to utilize another carrier's entrance facilities without placing a riser cable from the vault splice point, by means of a CCXC.

5.11.1 For a Remote Site, the Parties will negotiate the rates, terms and conditions based upon the technical feasibility and physical capacity at the time of a request from MCI.

5.12 Central Office Demarcation Point. BellSouth will designate the point(s) of demarcation between MCI's equipment and/or network and BellSouth's network. Each Party will be responsible for the maintenance and operation of all equipment/facilities on its side of the demarcation point. Upon a request from MCI, BellSouth may elect to offer alternative demarcation points from which MCI may choose. BellSouth will use its best efforts to provide a demarcation point to MCI's equipment that minimizes signal loss. For 2-wire and 4-wire connections to BellSouth's network, the demarcation point shall be a common block on BellSouth's designated conventional distributing frame (CDF). MCI shall be responsible for providing the necessary cabling, and MCI's BellSouth Certified Supplier shall be responsible for installing and properly labeling/stenciling the common block and any necessary cabling identified in Section 7 of this Attachment. MCI or its agent must perform all required maintenance to the equipment/facilities on its side of the demarcation point, pursuant to Section 5.14, following, and may self-provision cross-connects that may be required within its own Collocation Space to activate service requests.

5.13 Remote Site Point of Demarcation. The point of demarcation will be as follows for each service level: DS0 services will be the feeder distribution interface. DS1 services will be at the designated BellSouth DS1 cross-connect panel. DS3 services will be at the designated BellSouth DS-3 cross-connect panel. Dark fiber services will be at the designated BellSouth LGX panel.

5.14 MCI's Equipment and Facilities. MCI, or if required by this Attachment, MCI's BellSouth Certified Supplier, is solely responsible for the design, engineering, installation, testing, provisioning, performance, monitoring, maintenance and repair of the equipment and facilities used by MCI which must be performed in compliance with all BellSouth Specifications. Such equipment and facilities may include, but are not limited to, cable(s), equipment, and point of termination connections. MCI and its designated BellSouth Certified Supplier must follow and comply with all BellSouth Specifications outlined in the following BellSouth Technical Requirements: TR 73503, TR 73519, TR 73572, and TR 73564.

5.15 BellSouth's Access to Enclosed Collocation Space. From time to time, BellSouth may require access to MCI's Collocation Space. BellSouth retains the right to access MCI's space for the purpose of making BellSouth equipment and building modifications (e.g., running, altering or removing racking, ducts, electrical wiring, HVAC, and cabling). BellSouth will give notice to MCI at least forty-eight (48) hours before access to MCI's Collocation Space is required. MCI may elect to be present whenever BellSouth performs work in the MCI's Collocation Space. The Parties agree that MCI will not bear any of the expense associated with this type of work.

5.15.1 In the case of an emergency, BellSouth will provide oral notice of entry as soon as possible and, upon request, will provide subsequent written notice.

5.16 Access. Pursuant to Section 13, MCI shall have access to its Collocation Space, other than virtual Collocation Space twenty-four (24) hours a day, seven (7) days a week without the need for a security escort provided that MCI has met the safety and security requirements specified in Section 13 of this Attachment below. MCI agrees to provide the name and social security number, date of birth, or driver's license number of each employee, supplier, or agent of MCI that will be provided with access keys or cards (Access Devices), prior to the issuance of said Access Devices, using form RF-2906-C, the "CLEC and CLEC Certified Supplier Access Request and Acknowledgement" form. The appropriate key acknowledgement forms (the "Collocation Acknowledgement Sheet" for access cards and the "Key Acknowledgement Form" for keys) must be signed by MCI and returned to BellSouth Access Management within fifteen (15) calendar days of MCI's receipt. Failure to return these properly acknowledged forms will result in the holding of subsequent access key or card requests until the proper key acknowledgement documents have been received by BellSouth and reflect current information. Access Devices may not be duplicated under any circumstances. MCI agrees to be responsible for all Access Devices and for the return of all Access Devices in the possession of MCI's employees, suppliers, or agents after termination of the employment relationship, the contractual obligation with MCI ends, upon the termination of this Attachment, or upon the termination of occupancy of Collocation Space in a specific BellSouth Premises.

5.16.1 BellSouth will provide MCI with reasonable access to restroom facilities, parking, eyewash stations, shower stations, and drinking water, where available, within the collocated facility twenty-four (24) hours per day, seven (7) days per week for MCI personnel and its designated agents. BellSouth will allow the temporary occasional use of convenience outlets where available at a BellSouth Premises. For enclosed Collocation Space, if BellSouth constructs the enclosure, BellSouth will provide the Collocation Space with one AC outlet as part of the construction. If MCI constructs the enclosure, MCI would be responsible, through a BellSouth certified vendor, for providing outlets and grounding the cage and running the necessary wiring from the BellSouth electrical panel to the Collocation Space. BellSouth will provide stumble lighting to the Collocation Space.

5.16.2 BellSouth will permit one (1) accompanied site visit to MCI's designated Collocation Space, after receipt of the BFFO, which visit may be at, or prior to, the transfer of the completed Collocation Space to the CLEC, without charge to MCI. This site visit will be scheduled on a date that is mutually agreeable to both Parties. MCI may use this site visit to examine the collocation area, power and cabling arrangements, and demarcation point(s), and may also use the tour to familiarize itself with the BellSouth Premises' features and functions that may be necessary to enable MCI to interconnect with BellSouth's network or to obtain access to UNEs. MCI must submit to BellSouth the completed Access Control Request Form for all employees or agents requiring access to a BellSouth Premises at least thirty (30) calendar days prior to the date MCI desires access to the Collocation Space. In order to permit reasonable access during construction of the Collocation Space, MCI may submit a request for its one (1) accompanied site visit to its designated collocation arrangement at any time subsequent to BellSouth's receipt of the BFFO. In the event MCI desires access to the Collocation Space after submitting such a request, but prior to the approval of its access request, in addition to the first accompanied free visit, BellSouth shall permit MCI to access the Collocation Space accompanied by a security escort, at MCI's expense, which will be assessed pursuant to the Security Escort fees contained in Exhibit B. MCI must request such escorted access to its designated Collocation Space at least three (3) business days prior to the date such access is desired.

5.17 Lost or Stolen Access Devices. MCI shall immediately notify BellSouth in writing when any of its Access Devices have been lost or stolen. MCI will reimburse BellSouth to replace lost or stolen Access Devices at the rates as set forth in Exhibit B of this Attachment. If it becomes necessary for BellSouth to re-key buildings or deactivate an Access Device as a result of a lost or

stolen Access Device(s) or for failure of MCI's employees, suppliers, or agents to return an Access Device(s), MCI shall pay for the costs of re-keying the affected access or reactivating the Access Devices.

5.18 Interference or Impairment. Notwithstanding any other provisions of this Agreement , MCI shall not use any product or service provided under this Agreement, any other service related thereto or used in combination therewith, or place or use any equipment or facilities in any manner that 1) significantly degrades, interferes with or impairs service provided by BellSouth or any other entity or any person's use of its telecommunications services in excess of degradation, interference or impairment explicitly permitted by Applicable Law or national standards; 2) endangers or damages the equipment, facilities or any other property of BellSouth or any other entity or person; 3) compromises the privacy of any communications routed through the premises, unless otherwise authorized by tariff or Applicable Law; or 4) creates an unreasonable risk of injury or death to any individual or to the public. If BellSouth reasonably determines that any equipment or facilities of MCI violates the provisions of this paragraph, BellSouth shall provide written notice to MCI, which shall direct MCI to cure the violation within forty-eight (48) hours of MCI's receipt of written notice or, at a minimum, to commence curative measures within twenty-four (24) hours and exercise reasonable diligence to complete such measures as soon as possible thereafter. After receipt of the notice, the Parties agree to consult immediately and, if necessary, to conduct an inspection of the Collocation Space.

5.18.1 Except in the case of the deployment of an advanced service, as described in Section 5.18.2 below, which significantly degrades the performance of other advanced services or traditional voice band services, if MCI uses any product or service provided under this Agreement, any other service related thereto or used in combination therewith, or places or uses any equipment or facilities in any manner that 1) significantly degrades, interferes with or impairs service provided by BellSouth or any other entity or any person's use of its telecommunications services in excess of degradation, interference or impairment explicitly permitted by Applicable Law or national standards; 2) endangers or damages the equipment, facilities or any other property of BellSouth or any other entity or person; 3) compromises the privacy of any communications routed through the premises, unless otherwise authorized by tariff or Applicable Law; or 4) creates an unreasonable risk of injury or death to any individual or to the public and if MCI fails to cure the violation within forty-eight (48) hours or, if such cure is not possible, to commence curative action within twenty-four (24) hours and exercise reasonable diligence to complete such action as soon as possible, or if the violation is of a character that poses an immediate and substantial threat of damage to property or injury or death to any person, or any other significant degradation, interference or impairment of BellSouth's or another entity's service, then and only in that event, BellSouth may take such action as it deems necessary to eliminate such threat including, without limitation, the interruption of electrical power to MCI's equipment and/or facilities. BellSouth will attempt, but is not required, to provide notice to MCI prior to the taking of such action and BellSouth shall have no liability to MCI for any damages arising from such action, except to the extent that such action by BellSouth constitutes willful misconduct.

5.18.2 For purposes of this Section, the term "significantly degrades" shall be defined as an action that noticeably impairs a service from a user's perspective. In the case of the deployment of an advanced service which significantly degrades the performance of other advanced services or traditional voice band services and the interfering Party fails to cure the violation within forty-eight (48) hours, or if such cure is not possible, to commence curative action within twenty-four (24) hours and exercise reasonable diligence to complete such action as soon as possible, the reporting Party will establish before the appropriate Commission that the technology deployment is causing the significant degradation. Any claims of network harm presented to the interfering Party or, if subsequently necessary, the Commission must be provided by the reporting Party with specific and verifiable information. When the reporting Party demonstrates that a certain

technology deployed by the interfering Party is significantly degrading the performance of other advanced services or traditional voice band services, the interfering Party shall discontinue deployment of that technology and migrate its customers to other technologies that will not significantly degrade the performance of such services. Where the only degraded service itself is a known disturber, and the newly deployed technology satisfies at least one of the criteria for a presumption that it is acceptable for deployment, the degraded service shall not prevail against the newly-deployed technology.

5.19 Central Office Personalty and its Removal. Facilities and equipment placed by MCI in the Collocation Space shall not become a part of the Collocation Space, even if nailed, screwed or otherwise fastened to the Collocation Space, but shall retain their status as personal property and may be removed by MCI at any time. Any damage caused to the Collocation Space by MCI's employees, suppliers, agents or representatives during the installation or removal of such property shall be promptly repaired by MCI at its sole expense. If MCI decides to remove equipment from its Collocation Space and the removal requires no physical work be performed by BellSouth and MCI's physical work includes, but is not limited to, power reduction, cross-connects, or tie pairs, BellSouth will bill MCI an Administrative Only Application Fee as set forth in Exhibit B. This nonrecurring fee will be billed on the date that BellSouth provides an Application Response to MCI.

5.20 Alterations. Under no condition shall MCI or any person acting on behalf of MCI make any rearrangement, modification, augment, improvement, addition, and/or other alteration which could affect in any way space, power, HVAC, and/or safety considerations to the Collocation Space or the BellSouth Premises, hereinafter referred to individually or collectively as "Alterations" (unless identified and defined as "Augments" in Section 7.1.4), without the express written consent of BellSouth, which shall not be unreasonably withheld. The cost of any such Alteration shall be paid by MCI. An Alteration shall require the submission of a Subsequent Application and will result in the assessment of the applicable application fee associated with the type of alteration requested, as set forth in Section 6.3, and 7.1.4 which will be billed by BellSouth on the date that BellSouth provides MCI with an Application Response.

5.21 Janitorial Service. MCI shall be responsible for the general upkeep of its Collocation Space. MCI shall arrange directly with a BellSouth Certified Supplier for janitorial services applicable to Caged Collocation Space. BellSouth shall provide a list of such suppliers on a BellSouth Premises-specific basis, upon request.

6 Ordering and Preparation of Collocation Space

6.1 Initial Application. For MCI's initial equipment placement, MCI shall input a Physical Expanded Interconnection Application Document (Initial Application or Remote Site Application) directly into BellSouth's electronic application (e.App) system for processing. The Initial Application is considered Bona Fide when it is complete and accurate, meaning that all of the required fields on the application are completed with the appropriate type of information. An application fee will apply to each application submitted by MCI and will be billed by BellSouth on the date BellSouth provides MCI with an Application Response. With respect to Remote Site Collocation, the placement of an additional rack/bay at a later date will be treated in the same fashion and a Remote Site Application will be required. The installation of additional shelves/equipment**,** within an existing bay or rack does not require a Remote Site Application.

6.2 Subsequent Application. In the event MCI desires to modify its use of the Collocation Space after MCI has submitted an application and the status has changed to BFFO, MCI shall complete an application ("Subsequent Application") that contains all of the detailed information associated with the Alteration related to the Collocation Space. The Subsequent Application will be

considered Bona Fide when it is complete and accurate, meaning that all of the required fields on the Subsequent Application are completed with the appropriate type of information associated with the alteration. BellSouth shall determine what modifications, if any, to the BellSouth Premises are required to accommodate the change requested by MCI in the application. Such modifications to the BellSouth Premises may include, but are not limited to, floor loading changes, changes necessary to meet HVAC requirements, changes to power plant requirements, and equipment additions.

6.3 Subsequent Application Fee. The application fee paid by MCI for an Alteration shall be dependent upon the level of assessment needed to complete the Alteration requested. Where the Subsequent Application does not require provisioning or construction work, but requires administrative activity to be performed by BellSouth an Administrative Only Application Fee shall apply as set forth in Exhibit B. The Administrative Only Application Fee will apply to Subsequent Applications associated with a transfer of ownership of the Collocation Space, removal of equipment from the Collocation Space, (where the removal requires no physical work to be performed by BellSouth), the substitution of comparable equipment other than what was originally listed on the application , an Alteration made to a Bona Fide application prior to BellSouth's receipt of the BFFO, but after MCI's receives the application response, and a virtual to physical collocation Conversion (In Place). The Co-Carrier Cross-Connect/Direct Connect Application Fee will apply when MCI submits a Subsequent Application for a direct connection between its own virtual and physical Collocation arrangements in the same BellSouth Premises or between its virtual or physical Collocation arrangement and that of another collocated telecommunications carrier within the same BellSouth Premises. The fee for a Subsequent Application, in which the Alteration requested has limited effect (e.g., requires limited assessment and sufficient cable support structure, HVAC, power and terminations are available) shall be the Subsequent Application Fee, as set forth in Exhibit B. The appropriate nonrecurring application fee will be billed on the date that BellSouth provides MCI with an Application Response. Notwithstanding the foregoing, there shall be no charges imposed for a records only change pursuant to Section 7.1.3.

6.4 Space Preferences. If MCI has previously requested and received a Space Availability Report for the "BellSouth Premises", MCI may submit up to three (3) space preferences on its application by identifying the specific space identification numbers referenced on the Space Availability Report for the space it is requesting. In the event BellSouth cannot accommodate MCI's preference(s), MCI may accept the space allocated by BellSouth or cancel its application and submit another application requesting additional space preferences for the same central office. This application will be treated as a new application and an application fee will apply. The application fee will be billed by BellSouth on the date that BellSouth provides MCI with an Application Response.

6.5 Space Availability Notification.

6.5.1 BellSouth will respond to an application within ten (10) calendar days as to whether space is available or not available within the requested BellSouth Premises. BellSouth's e.App will reflect when MCI's application is Bona Fide. If the application is not Bona Fide, BellSouth will identify what revisions are necessary for the application to become Bona Fide. If the amount of space requested is not available, BellSouth will notify MCI of the amount of space that is available and no application fee will apply. When BellSouth's response includes an amount of space less than that requested by MCI or space that is configured differently, no application fee will apply. If MCI decides to accept the available space, MCI must resubmit its application to reflect the actual space available, including the configuration of the space, prior to submitting a BFFO. When MCI resubmits its application to accept the available space, BellSouth will bill MCI the appropriate application fee.

6.5.2 Intentionally Omitted.

6.5.3 In the event space is not immediately available at a Remote Site Location, BellSouth reserves the right to make additional space available, in which case the conditions in Section 7 shall apply, or BellSouth may elect to deny space in accordance with this Section 6.6 in which case virtual or adjacent collocation options may be available. If the amount of space requested is not available, BellSouth will notify MCI of the amount of space that is available.

6.6 Denial of Application. If BellSouth notifies MCI that no space is available ("Denial of Application"), BellSouth will not assess an application fee to MCI. At the same time BellSouth gives its denial of application, BellSouth will submit to the Commission a notice of intent to seek waiver. After notifying MCI that there is no available space, in the requested BellSouth Premises, BellSouth will allow MCI, upon request, and at no charge, to tour the entire BellSouth Premises within ten (10) calendar days of such Denial of Application. In order to schedule this tour within ten (10) calendar days, BellSouth must receive the request for a tour of the BellSouth Premises within five (5) calendar days of the Denial of Application. Upon Denial of the Application, BellSouth will timely file a petition with the state commission pursuant to 47 U.S.C. 251(c)(6). BellSouth shall submit to the state commission, subject to any protective order as the state commission may deem necessary, detailed floor plans or diagrams of any Premises where BellSouth claims that physical collocation is not practical because of space limitations. BellSouth will comply with the rules and regulations of the state commission for filing of petitions for waiver.

6.7 Waiting List

6.7.1 On a first-come, first-served basis, which is governed by the date of receipt of an application or Letter of Intent, BellSouth will maintain a waiting list of requesting telecommunication carriers that have either received a Denial of Application or, where it is publicly known that the BellSouth Premises is out of space, have submitted a Letter of Intent to collocate in that BellSouth Premises. Sixty (60) calendar days prior to space becoming available, if known, BellSouth will notify the Commission and the telecommunication carriers on the waiting list by mail according to the position of each Telecommunications Carrier on said waiting list. If BellSouth does not know sixty (60) calendar days in advance of when space will become available, BellSouth will notify the Commission and the telecommunication carriers on the waiting list within two (2) business days of the determination that space will become available. Upon request BellSouth will advise MCI as its position on the list. A telecommunication carrier that, upon denial of physical Collocation Space, requests virtual Collocation Space shall automatically be placed on the waiting list for physical Collocation Space that may become available in the future.

6.7.2 When physical Collocation Space becomes available, MCI must submit an updated, complete, and accurate application to BellSouth within thirty (30) calendar days of notification by BellSouth that physical Collocation Space will be available in the requested BellSouth Premises previously out of space. If MCI has originally requested caged Collocation Space and cageless Collocation Space becomes available, MCI may refuse such space and notify BellSouth in writing within the thirty (30) day timeframe that MCI wants to maintain its place on the waiting list for caged Physical Collocation Space, without accepting the available cageless Collocation Space.

6.7.3 MCI may accept an amount of space less than what it originally requested by submitting an application as set forth above, and upon request, may maintain its position on the waiting list for the remaining space that was initially requested. If MCI does not submit an application or notify BellSouth in writing as described above, BellSouth will offer the space to the next

telecommunication carrier on the waiting list and remove MCI from the waiting list. Upon request, BellSouth will advise MCI as to its position on the waiting list.

6.8 Public Notification. BellSouth will maintain on its Interconnection Services website a notification document that will indicate all BellSouth Premises that are without available space. BellSouth shall update such document within ten (10) calendar days of the date that BellSouth becomes aware that insufficient space is available to accommodate physical collocation. BellSouth will also post a document on its Interconnection Services website that contains a general notice when space becomes available in a BellSouth Premises previously on the space exhaust list.

6.9 Application Response

6.9.1 When space has been determined to be available for caged or cageless arrangements, BellSouth will provide an Application Response or Remote Site Application Response within twenty (20) calendar days of receipt of a Bona Fide application for physical collocation and ten (10) calendar days for virtual collocation. The Central Office Application Response will include sufficient information to enable MCI to place a Firm Order**,** which, at a minimum**,** will consist of the configuration of the space, the Cable Installation Fee, Cable Records Fee, and any other applicable space preparation fees, as described in Section 9.

6.10 Application Revisions.

6.10.1 If a modification or revision is made to any information in the application prior to MCI's receipt of BellSouth's Application Response, the modified or revised application shall be treated as a substitute for the original Bona Fide Application. The modified or revised application shall be handled as a new application with respect to the response and provisioning intervals. If a modification or revision is made after MCI's receipt of BellSouth's Application Response, with the exception of modifications to (1) Customer Information, (2) Contact Information, (3) Billing Contact Information, (4) any explanation to be added to the application, or (5) as necessitated by technical considerations, the modification or revision shall be treated as a Subsequent Application, and BellSouth shall assess fees pursuant to Section 6.3.

6.11 Bona Fide Firm Order.

6.11.1 MCI shall indicate its intent to proceed with collocation in a BellSouth Premises by submitting a Firm Order to BellSouth. BellSouth's response to a Firm Order will include confirmation of change in status, via the e-Application system, to reflect Firm Order Received and Firm Order Bona Fide (BFFO). The BFFO must be received by BellSouth no later than thirty (30) calendar days after BellSouth's Application Response to MCI's Bona Fide Application or MCI's application will expire.

6.11.2 BellSouth will establish a firm order date based upon the date BellSouth is in receipt of MCI's BFFO. BellSouth will acknowledge the receipt of MCI's BFFO within seven (7) calendar days of receipt, so that MCI will have positive confirmation that it's BFFO has been received. BellSouth's response to a BFFO will include a Firm Order Confirmation, which contains the firm order date. No revisions can be made to a BFFO.

7 Provisioning

7.1 Provisioning Intervals.

7.1.1 Intentionally Omitted.

7.1.2 BellSouth will complete provisioning for caged physical Collocation Space under ordinary conditions within a maximum of ninety (90) calendar days from receipt of a BFFO or as agreed to by the Parties. BellSouth will complete provisioning for cageless physical Collocation Space under ordinary conditions within a maximum of sixty (60) calendar days from receipt of a BFFO and ninety (90) calendar days from receipt of a BFFO for extraordinary conditions, or as agreed to by the Parties. For virtual Collocation Space, BellSouth will complete provisioning under ordinary conditions within a maximum of fifty (50) calendar days from receipt of a BFFO and seventy-five (75) days from receipt of a BFFO for extraordinary conditions, or as agreed to by the Parties. Extraordinary conditions include, but may not be limited to: major BellSouth equipment rearrangements or additions; power plant additions or upgrades; major mechanical additions or upgrades; major upgrades for ADA compliance; environmental hazards or hazardous materials abatement; and arrangements for which equipment shipping intervals are extraordinary in length. The Parties may mutually agree to renegotiate an alternative provisioning interval or BellSouth may seek a waiver from the ordered interval from the Commission.

7.1.3 Records Only Change. When MCI adds equipment within initial demand parameters that requires no additional space preparation work on the part of BellSouth, then no additional charges or intervals will be imposed by BellSouth that would cause delay in MCI's operation.

7.1.4 BellSouth will provide the reduced intervals outlined below to MCI, when MCI requests an augment that is identified in Sections 7.1.4.1, 7.1.4.2, 7.1.4.3, 7.1.4.4 and 7.1.4.5 ("Augment") after the Space Ready Date for existing physical Collocation Space. Unless otherwise set forth in Section 7.1.4.10, any such augment application will require a Subsequent Application and will result in the assessment of an Augment Application fee as set forth in Exhibit B.

7.1.4.1 Simple Augments will be completed within twenty (20) calendar days after receipt of the BFFO for an:

- Extension of Existing AC Circuit Capacity within Arrangement Where Sufficient Circuit Capacity is Available
- Fuse Change and/or Increase or Decrease -48V DC Power from Existing ILEC BDFB

7.1.4.2 Minor Augments will be completed within forty-five (45) calendar days after receipt of the BFFO for:

- 168 DS1s Terminations at the ILEC Demarcation Frame (Databasing Only; Panels, Relay Racks and Overhead Racking Exist)
- 96 DS3s Terminations at the ILEC Demarcation Frame (Databasing Only; Panels, Relay Racks and Overhead Racking Exist)
- 99 Fiber Terminations at the ILEC Demarcation Frame (Databasing Only; Panels, Relay Racks and Overhead Racking Exist)
- Maximum of 2000 Service Ready DS0 Terminations at the ILEC Demarcation Frame (Databasing Only; Panels, Relay Racks and Overhead Racking Exist)

7.1.4.3 Intermediate Augments will be completed within sixty (60) calendar days after receipt of the BFFO for:

- 168 DS1s (Databasing and Installation of Termination Panels, Relay Racks or Additional Structure as Required)

- 96 DS3s (Databasing and Installation of Termination Panels, Relay Racks or Additional Structure as Required)
- 99 Fiber Terminations (Databasing and Installation of Termination Panels, Relay Racks or Additional Structure as Required)
- 2000 DS0s (Databasing and Installation of Termination Panels, Relay Racks or Additional Structure as Required)
- Installation of Cable Racking or Other Support Structures as Required to Support Co-Carrier Cross-Connects (Adequate Floor or Ceiling Structural Capacity Exists and Support/Protection Structure for Fiber Patch Cord is Excluded)

7.1.4.4 Major Augments of physical Collocation Space will be completed within ninety (90) calendar days after BFFO. This category includes all requests for additional physical Collocation Space (caged or cageless).

7.1.4.5 Major Augments of virtual Collocation Space will be completed within seventy-five (75) calendar days after BFFO. This category includes all requests for additional virtual Collocation Space.

7.1.4.6 If MCI submits an augment application request that includes two augment items from the same category in either Section 7.1.4.1, 7.1.4.2, or 7.1.4.3 above, the provisioning interval associated with the next highest augment category will apply (e.g., if two items from the minor augment category are requested on the same request, then an interval of sixty (60) calendar days from the receipt of the BFFO would apply, which is the interval associated with the intermediate category).

7.1.4.7 If MCI submits an augment application request that includes three augment items from the same category in either Section 7.1.4.1, 7.1.4.2, or 7.1.4.3 above, the major augment interval of ninety (90) calendar days from the receipt of the BFFO would apply (e.g., if three items from the simple augment category are requested on the same request for a physical collocation arrangement, then an interval of ninety (90) calendar days from the receipt of the BFFO would apply, which is the major physical augment interval; likewise if three items from the simple augment category are requested on the same request for a virtual collocation arrangement, then an interval of seventy-five (75) calendar days from the receipt of the BFFO would apply, which is the major virtual augment interval.

7.1.4.8 If MCI submits an augment application request that includes one augment item from two separate categories in Sections 7.1.4.1, 7.1.4.2 and 7.1.4.3 above, the augment interval associated with the highest augment category will apply (e.g., if an item from the minor augment category and an item from the intermediate augment category are requested on the same request, then an interval of sixty (60) calendar days from the receipt of the BFFO would apply, which is the interval associated with the intermediate augment category).

7.1.4.9 All Augments not expressly included in the Simple, Minor, Intermediate or Major categories, as outlined above, will be placed into the appropriate category as negotiated by MCI and BellSouth. If MCI and BellSouth are unable to determine the appropriate category through negotiation, then the appropriate major augment category, identified in Section 7.1.4.4 and 7.1.4.5, would apply based on whether the augment request is for MCI's physical or virtual Collocation Space.

7.1.4.10 Individual application fees associated with simple, minor and intermediate augment applications are contained in Exhibit B. The appropriate application fee will be assessed to MCI at the time BellSouth provides MCI with the Application Response. MCI will be assessed a Subsequent Application Fee for all Major Augment applications (Major Augments are defined above in Sections 7.1.4.4 and 7.1.4.5). The Subsequent Application Fee is also reflected in Exhibit B of this Attachment.

7.2 Joint Planning. Unless otherwise agreed to by the Parties, a joint planning meeting (that need not be face to face) between BellSouth and MCI will commence within a maximum of fourteen (14) calendar days from BellSouth's receipt of a BFFO. At such meeting, the Parties will agree to the preliminary design of the Collocation Space and the equipment configuration requirements, as reflected in the application and affirmed in the BFFO. BellSouth will provide MCI with its best estimate of cable distances (a) from the entrance manhole to the vault and (b) from the vault to MCI's Collocation Space during the joint planning meeting, if required.

7.3 Permits. Each Party, its agent(s) or BellSouth Certified Supplier(s) will file for the appropriate permits, zoning and licenses required for the scope of work to be performed by that Party, its agent(s) or BellSouth Certified Supplier(s). Local building codes, especially relating to permitting issues, should not affect the collocation intervals provided in this Agreement; provided, however, that if an intractable timing problem exists, BellSouth may seek a waiver from the Commission upon a showing of extraordinary circumstances.

7.4 Circuit Facility Assignments ("CFAs"). Unless otherwise specified, BellSouth will provide CFAs to MCI prior to the Space Ready Date for those BellSouth Premises in which MCI has physical Collocation Space with no POT bay or with a grand fathered POT bay provided by BellSouth. BellSouth cannot provide CFAs to MCI prior to the Space Ready Date for those BellSouth Premises in which MCI has physical Collocation Space with a POT bay provided by MCI or virtual Collocation Space, until MCI provides BellSouth with the following information: For physical Collocation Space with a MCI-provided POT bay, MCI shall provide BellSouth with a complete layout of the POT panels on an equipment inventory update (EIU) form, showing locations, speeds, etc.

7.4.1 For virtual Collocation Space, MCI shall provide BellSouth with a complete layout of MCI's equipment on an equipment inventory update (EIU) form, including the locations of the low speed ports and the specific frame terminations to which the equipment will be wired by MCI's BellSouth Certified Supplier.

7.4.2 BellSouth cannot begin work on the CFAs until the complete and accurate EIU form is received from MCI. If the EIU form is provided within ten (10) calendar days prior to the Space Ready Date, then the CFAs will be made available by the Space Ready Date. If the EIU form is not received ten (10) calendar days prior to the Space Ready Date, then the CFAs will be provided within ten (10) calendar days of receipt of the EIU form.

7.5 Resend of Collocation CFAs. Upon MCI's request, BellSouth will resend MCI a copy of the CFAs that BellSouth previously provided to MCI for MCI's collocation arrangement in a specific BellSouth central office. This information will include only the data that was provided by BellSouth to MCI on the original CFA document. The nonrecurring charge associated with providing MCI with the resend of its CFAs will be assessed on a per request, per collocation arrangement basis, pursuant to the rates contained in Exhibit B, on the date that BellSouth provides the requested resend of CFA information to MCI.

7.6 Use of BellSouth Certified Supplier. MCI shall select a supplier which has been approved as a BellSouth Certified Supplier to perform engineering and installation work. In some cases, MCI may need to select different BellSouth Certified Suppliers for those work activities associated with transmission equipment, switching equipment and power equipment. MCI and MCI's BellSouth Certified Supplier must follow and comply with all of BellSouth's Specifications outlined in the following BellSouth Technical Requirements: TR 73503 and TR 73572, 73519 and 73564. BellSouth shall provide MCI with a list of BellSouth Certified Suppliers upon request. The BellSouth Certified Supplier(s) shall be responsible for installing MCI's equipment and associated components, installing co-carrier cross-connects and direct connects, extending

power cabling to the BellSouth power distribution frame, performing operational tests after installation is completed, and notifying BellSouth's equipment engineers and MCI upon successful completion of the installation. The BellSouth Certified Supplier shall bill MCI directly for all work performed for MCI pursuant to this Attachment. BellSouth shall have no liability for, nor responsibility to pay, such charges imposed by MCI's BellSouth Certified Supplier. BellSouth shall make available its supplier certification program, including certification materials to enable certification to employees or contractors, to MCI or any supplier, which may include MCI, proposed by MCI and will not unreasonably withhold certification. All work performed by or for MCI shall conform to generally accepted industry standards.

7.7 Alarm and Monitoring. BellSouth shall place environmental alarms in the BellSouth Premises for the protection of equipment and facilities. MCI has the right to and shall be responsible for the placement, monitoring and removal of environmental and equipment alarms used to service MCI's Collocation Space. Upon request, BellSouth will provide MCI with an applicable tariffed service(s) to facilitate remote monitoring of collocated equipment by MCI. Both Parties shall use best efforts to notify the other of any verified environmental condition known to that Party.

7.8 Basic Telephone Service. Upon request of MCI, BellSouth will provide basic telephone service to the Collocation Space under the rates, terms and conditions of the current tariff offering for the service requested, and with a connection jack as requested by MCI from BellSouth for the collocated space. This service must be obtained through the BellSouth Business Office.

7.9 Virtual to Physical Collocation Relocation. In the event physical Collocation Space was previously denied at a BellSouth Premises due to technical reasons or space limitations, or virtual collocation was provisioned prior to the availability of physical cageless collocation, and physical Collocation Space has subsequently become available, MCI may relocate its existing virtual collocation arrangement(s) to a physical collocation arrangement(s) and pay the appropriate fees associated with physical Collocation Space**.** If BellSouth knows when additional space for physical collocation may become available at the "BellSouth Premises" requested by MCI, such information will be provided to MCI in BellSouth's written denial of physical Collocation Space. MCI must arrange with a BellSouth Certified Supplier for the relocation of equipment from its virtual Collocation Space to its physical Collocation Space and will bear the cost of such relocation.

7.9.1 Virtual to Physical Conversion (In-Place). Virtual collocation arrangements may be converted to "in-place" physical collocation arrangements if the potential conversion meets all of the following criteria: 1) there is no change in the amount of equipment or the configuration of the equipment that was in the virtual Collocation Space; 2) the conversion of the virtual collocation arrangement will not cause the equipment or the results of that conversion to be located in a space that BellSouth has reserved for its own future needs; and 3) the converted arrangement does not limit BellSouth's ability to secure its own equipment and facilities due to the location of the virtual Collocation Space. Notwithstanding the foregoing, if the BellSouth Premises is at or nearing space exhaust, BellSouth may authorize the conversion of the virtual arrangement to a physical arrangement even though BellSouth may no longer be able to secure its own facilities**.** BellSouth will complete virtual to physical conversions (in-place) within sixty (60) calendar days from receipt of the BFFO. BellSouth will bill MCI an Administrative Only Application Fee, as set forth in Exhibit B, on the date BellSouth provides an Application Response to MCI.

7.10 Cancellation. When MCI cancels its request prior to the Space Ready Date, there will not be a cancellation charge. The Parties agree that MCI will be responsible for reimbursing BellSouth for costs specifically incurred by BellSouth on behalf of MCI up to the date that the written notice of cancellation is received.

7.11 Licenses. MCI, at its own expense, will be solely responsible for obtaining from governmental authorities, and any other appropriate agency, entity, or person, all rights, privileges, permits, licenses, and certificates necessary or required to operate as a provider of telecommunication services to the public or occupy Collocation Space in a BellSouth Premises.

7.12 Environmental Compliance. The Parties agree to utilize and adhere to the Environmental Hazard Guidelines identified in Exhibit A attached hereto.

8 Central Office Power

8.1 BellSouth shall make available –48 Volt (-48V) Direct Current (DC) power for MCI's Collocation Space at a BellSouth Battery Distribution Fuse Bay (BDFB). If MCI was previously served off BellSouth's main power board pursuant to MCI's previous Interconnection Agreement, that arrangement shall be grandfathered. When obtaining DC power from BellSouth's BDFB, MCI's fuses and power cables (A&B) must be engineered (sized), and installed by MCI's BellSouth Certified Supplier. MCI is responsible for contracting with a BellSouth Certified Supplier for the power distribution feeder cable running from the BellSouth BDFB to MCI's equipment. The BellSouth Certified Supplier contracted by MCI must provide BellSouth with a copy of the engineering power specifications prior to the day on which MCI's equipment becomes operational (Commencement Date). BellSouth will provide the common power feeder cable support structure between the BellSouth BDFB and MCI's Collocation Space. MCI shall contract with a BellSouth Certified Supplier who will be responsible for the following power provisioning activities: installing, removing or replacing dedicated power cable support structure within MCI's arrangement, power cable feeds, and terminations of cable. MCI and MCI's BellSouth Certified Supplier shall comply with all applicable National Electric Code (NEC), BellSouth TR73503, Telcordia and ANSI Standards regarding power cabling, installation, and maintenance.

MCI will be required to have a minimum of forty-five (45) amps of L-1 drain for each 225 Amp breaker provisioned from a BellSouth Power Board in order to convert to the L1 Drain Power Usage option.

8.1.1 Pursuant to technical feasibility, commercial availability, and safety limitations, BellSouth shall provide DC power from the BellSouth BDFB in 5-amp increments from 10 amps up to 100 amps on a single feed request.

8.2 BellSouth will revise MCI's recurring power charges, in accordance with Section 9.3 below, to reflect a power upgrade when MCI submits a Subsequent Application requesting an increase in the amperage it is currently receiving from BellSouth for its physical Collocation Space. If MCI's existing fuses and power cables (for the A&B power feed) are not sufficient to support the additional number of amps requested, MCI's BellSouth Certified Supplier shall perform whatever activities are necessary, which may include the installation of new/additional fuses or power cables, to comply with the appropriate NEC, BellSouth TR73503, Telcordia, and ANSI Standards, as well as the requirements noted above in Section 8.1. MCI's BellSouth Certified Supplier shall provide notification to BellSouth when these activities have been completed.

8.3 BellSouth will revise MCI's recurring power charges, in accordance with Section 9.3 below, to reflect a power reduction upon BellSouth's receipt of the Power Reduction Form from MCI, certifying the completion of the power reduction work, including the removal of any associated power cabling by MCI's BellSouth Certified Supplier. Notwithstanding the foregoing, if MCI's BellSouth Certified Supplier has not removed or, at BellSouth's discretion, cut the power cabling within thirty (30) calendar days, the power reduction will not become effective until the cabling is removed or, at BellSouth's discretion, cut by MCI's BellSouth Certified Supplier and MCI

shall pay the for the amount of power that had been requested prior to the power reduction request for the period up to the date the power cabling is actually removed.

8.4 If MCI requests an increase or a reduction in the amount of power that BellSouth is currently providing, MCI must submit a Subsequent Application. If no modification to the Collocation Space is requested other than the increase or reduction in power, the Simple Augment fee as set forth in Exhibit B will apply. If modifications are requested in addition to the increase or reduction of power, the Subsequent Application Fee will apply. BellSouth will bill this nonrecurring fee on the date that BellSouth provides an Application Response to MCI's Subsequent Application.

8.4.1 If MCI has existing power configurations currently served from the BellSouth main power board and requests that its power be reconfigured to connect to a BellSouth BDFB, in a specific central office, MCI must submit a Subsequent Application. BellSouth will respond to such application within seven (7) calendar days and a Subsequent Application fee will apply for this reconfiguration to a BellSouth BDFB.

8.4.1.1 In Alabama and Louisiana, <u>if</u> MCI has grandfathered power configurations currently served from the BellSouth main power board and requests that its power be reconfigured to connect to a BellSouth BDFB, in a specific central office, MCI must submit a Subsequent Application. BellSouth will respond to such application within seven (7) calendar days and no application fee will apply for this one time only power reconfiguration to a BellSouth BDFB. For any power reconfigurations thereafter, MCI will submit a Subsequent Application and the appropriate application fee will apply.

8.5 MCI shall contract with a BellSouth Certified Supplier to perform the installation and removal of dedicated power cable support structure within MCI's arrangement and terminations of cable within the physical Collocation Space.

8.6 Intentionally Omitted.

8.7 Intentionally Omitted.

8.8 Intentionally Omitted.

8.9 Intentionally Omitted.

8.10 Intentionally Omitted.

8.11 Intentionally Omitted.

8.12 <u>Fused Amp Billing Option</u>. BellSouth shall make available –48V DC power on a per fused amp, per month basis, pursuant to the following formula:

8.12.1 <u>For power provisioned from a BDFB</u>. The number of fused amps requested by MCI on its collocation application should reflect a multiplier of 1.5 to convert its required amperage to fused amps, with a minimum of ten (10) fused amps required. The number of fused amps requested by MCI on its collocation application will be multiplied by the DC power fused amp rate set forth in Exhibit B.

8.12.2 <u>For existing power configurations that are provisioned from BellSouth's main power board.</u> The number of fused amps made available at the main power board, in increments of 225 amps/main power board circuit, will be multiplied by the DC power fused amp rate set forth in Exhibit B.

8.13 Central Office Physical Collocation List 1 Drain Power Usage Option.

The Central Office List 1 Drain Power Usage Option provided in this Section 8.13 shall be applicable for all nine (9) states in the BellSouth region (Alabama, Florida, Georgia, Kentucky, Louisiana, Mississippi, North Carolina, South Carolina and Tennessee) as an agreed-upon option for Attachment 4 of this Agreement. This Section 8.13 (List 1 Drain Power Usage Option) shall only be available to MCI for all nine (9) states in total and not on a single state basis pursuant to this Agreement. This provision is provided to MCI in lieu of any other usage options that currently exist or which options that may subsequently exist by order or contract in any of BellSouth's nine (9) states for the duration of this Agreement. If the rate for -48V DC power, per fused amp, is subsequently modified through an amendment pursuant to the change in law provision as set forth in the General Terms and Conditions of this Agreement, then in the state amended for change of law to include such rate, the rate for -48V DC power, per fused amp, will be applied if MCI elects to be billed on a fused amp basis. The rates for the List 1 Drain Power Usage Option are set forth in Exhibit B of this Attachment and shall remain the same rates for this List 1 Drain Power Usage Option for all nine (9) states during the term of this Agreement. If MCI elects to move to another usage option in a state where such usage option has been made available by Commission order this List 1 Drain Power Usage Option shall become void in all nine (9) states, and Attachment 4 will be amended to incorporate the then-current standard Attachment 4 rates, terms and conditions for Central Office and Remote Site Collocation in total. In such cases, MCI agrees to issue the appropriate applications necessary to convert any List 1 Drain Power arrangements to the newly elected power option.

8.13.1 If any rates, terms or conditions for the List 1 Drain Power Usage Option is modified by MCI's adoption of the rates, terms and conditions of another CLEC's interconnection agreement pursuant to section 252(i) of the Act in any of BellSouth's nine (9) states, such adopted rates, terms and conditions shall apply thereafter and to each physical collocation arrangement to which the List 1 Drain Power Usage Option applied and, in any states not covered by such adoption, the rates, terms and conditions for power usage, if any, of the then current Attachment 4 – Collocation provided for in the BellSouth standard interconnection agreement shall apply for those states, provided that such language fully effectuates and is consistent with applicable state commission orders. In such case, the List 1 Drain Power Usage Option outlined herein will become void for all nine (9) states on a prospective basis from the date an amendment or Subsequent Agreement is made effective for one (1) state or more than one (1) state in the BellSouth nine (9) state region. Additionally, MCI agrees to issue the appropriate applications necessary to convert any List 1 Drain Power arrangements to the newly adopted power option.

8.13.2 For each new physical collocation arrangement for which MCI desires the List 1 Drain Power Usage Option, MCI shall indicate in Remarks on its Initial Application that the List 1 Drain Power Usage Option is requested.

MCI shall provide the total List 1 (L-1) Drain amperages, based on the manufacturer's published specifications, for the equipment being installed based on the Telcordia definition of List 1 Drain defined in "LSSGR: Power, Section 13", GR-513-CORE Issue 1, September, 1995, paragraph 4.2.10.2 page 4-15 or as may be amended from time to time. Also, MCI must provide reference(s) to the manufacturer's published specifications in Remarks in Section 6 of the application for the equipment being installed.

If the manufacturer does not publish L-1 drain, then MCI shall estimate L-1 drain using either (1) or (2) below:

1) If the manufacturer publishes heat dissipation in Watts, divide the published heat dissipation

in Watts by fifty (50) Volts to derive estimated L-1 drain in Amps. MCI shall enter this estimated L-1 drain in Section 6 of the application and include the reference for the manufacturer's published heat dissipation. Example: The manufacturer did not publish L-1 drain, but did publish heat dissipation of 1,000 Watts. 1,000 W / 50 V = 20 A. Enter 20 A as L-1 drain.

2) If the manufacturer does not publish either L-1 drain or heat dissipation, multiply the manufacturer's recommended fuse size by 0.67 (67%) to derive an estimated L-1 drain. MCI shall enter this estimated L-1 drain in Section 6 of the application and include the reference for the manufacturer's published recommended fuse size. Example: Published recommended fuse size is thirty (30) Amps. 30 A * 0.67 = 20 A. Enter 20 A as the L-1 drain.

8.13.3 For each location that MCI requests to convert to the List 1 Drain Power Usage Option, MCI will submit a Subsequent Application indicating the total List 1 (L-1) Drain amperage based on the manufacturer's published specifications, for all equipment that is currently installed and any equipment added on the application. Additionally, MCI shall provide the manufacturer's documentation references for the specifications in the Remarks section of Section 6 of the application. MCI agrees to include in the Comments section of the Subsequent Application the following comment:

> "This Subsequent Application is MCI's certification that MCI is opting to convert this physical collocation arrangement to the List 1 Drain Power Usage Option using the List 1 Drain total amperage for the equipment indicated in Section 6 of this application."

8.13.4 BellSouth will bill MCI the appropriate application fee, as set forth in Exhibit B of this Attachment, on the date that BellSouth provides an Application Response to each Subsequent Application requesting to convert a physical collocation arrangement to the List 1 Drain Power Usage Option.

8.13.5 When MCI submits the appropriate Initial or Subsequent Application indicating its desire to elect the List 1 Drain usage option for a particular physical collocation arrangement in a specific Central Office, BellSouth will provide the associated Application Response pursuant to Section 6 of this Attachment. It will then be the responsibility of MCI to submit a BFFO, indicating its desire to proceed with its request. After BellSouth receives the BFFO from MCI, the Initial or Subsequent Application will be completed by BellSouth within the provisioning intervals contained in Section 7 of this Attachment and MCI will be notified of the Space Ready Date. When a Subsequent Application is used to elect the List 1 Drain usage option and there are no other changes requested, billing for the recurring charges will begin upon the Space Ready Date. BellSouth shall have the right to validate the manufacturer's published List 1 drain documentation as well as the right to verify actual usage based on meter reading at its own expense. If there is a difference of 10% (plus or minus) between what MCI indicates its List 1 Drain Power usage to be and what BellSouth believes the actual List 1 Drain Power usage to be, the parties agree to participate jointly to verify the actual usage or validate the specifications. This meeting should take place within ten (10) working days after BellSouth's provides written notice to MCI that such a review is needed. Once the analysis is completed and the actual usage is determined, MCI agrees to submit a Records Only Application to update the List 1 Drain amounts so that BellSouth can adjust the billing accordingly.

8.14 If MCI elects to install its own DC Power Plant, BellSouth shall provide Alternating Current (AC) power to feed MCI's DC Power Plant. Charges for AC power will be assessed on a per breaker ampere, per month basis, pursuant to the rates specified in Exhibit B. The AC power rates include recovery for the provision of commercial and standby AC power. When obtaining power from a BellSouth service panel, protection devices and power cables must be engineered

(sized) and installed by MCI's BellSouth Certified Supplier, with the exception that BellSouth shall engineer and install protection devices and power cables for Adjacent Collocation. MCI's BellSouth Certified Supplier must provide a copy of the engineering power Specifications prior to the Commencement Date. AC power voltage and phase ratings shall be determined on a per location basis. At MCI's option, MCI may arrange for AC power in an adjacent collocation arrangement from a retail provider of electrical power.

8.15 Remote Site Power. BellSouth shall make available –48 Volt (-48V) DC power for MCI's Remote Collocation Space at a BellSouth Battery Distribution Fuse Bay (BDFB) within the Remote Site Location. The charge for power shall be assessed as part of the recurring charge for rack/bay space. If the power requirements for MCI's equipment exceeds the capacity available, then such power requirements shall be assessed on an individual case basis (ICB). BellSouth will revise recurring power charges to reflect a power upgrade upon notification of the completion of the upgrade by MCI's BellSouth Certified Supplier. BellSouth will revise recurring power charges to reflect a power reduction upon BellSouth's receipt of the Power Reduction Form from MCI certifying the completion of the power reduction, including the removal of the power cabling by MCI's BellSouth Certified Supplier.

8.16 Remote Site Adjacent Collocation AC Power. Charges for AC power will be assessed per breaker ampere per month. Rates include the provision of commercial and standby AC power, where available. When obtaining power from a BellSouth service panel, protection devices and power cables must be engineered (sized), and installed by MCI's BellSouth Certified Supplier except that BellSouth shall engineer and install protection devices and power cables for Adjacent Collocation. MCI's BellSouth Certified Supplier must also provide a copy of the engineering power specification prior to the equipment becoming operational. Charges for AC power shall be assessed pursuant to the rates specified in Exhibit B. AC power voltage and phase ratings shall be determined on a per location basis. At MCI's option, MCI may arrange for AC power in an Adjacent Collocation arrangement from a retail provider of electrical power.

9 Rates and Charges

9.1 Application Fee. BellSouth shall assess any nonrecurring application fees within thirty (30) calendar days of the date that BellSouth provides an Application Response to MCI or on MCI's next scheduled monthly billing statement, if MCI's current month's billing cycle has already closed.

9.2 Cable Installation. Cable Installation Fee(s) are assessed per entrance cable placed. This nonrecurring fee will be billed by BellSouth upon receipt of MCI's BFFO.

9.3 Recurring Charges. If MCI has met the applicable fifteen (15) calendar day walkthrough interval specified in Section 4, billing for recurring charges will begin upon the Space Acceptance Date. In the event that MCI fails to complete an acceptance walkthrough within the applicable fifteen (15) calendar day interval, billing for recurring charges will commence on the Space Ready Date. If MCI occupies the space prior to the Space Ready Date, the date MCI occupies the space is deemed the new Space Acceptance Date and billing for recurring charges will begin on that date. The billing for all applicable monthly recurring charges will begin in MCI's next billing cycle and will include any prorated charges for the period from MCI's Space Acceptance Date or Space Ready Date, whichever is appropriate pursuant to Section 4.2, to the date the bill is issued by BellSouth.

9.4 Power Rates. Monthly recurring charges for -48V DC power will be assessed as set forth in Exhibit B of this attachment. Applicable rates shall vary depending on whether MCI elects to be billed on a fused basis, by electing to remain (or install new collocations or augments) under the

traditional collocation power billing method, or on a usage basis, by electing to convert collocations to (or install new collocations or augments under) the power usage option using List 1 (L-1) Drain as defined by Telecordia and set forth in Section 8 above with a minimum of ten (10) amps per collocation arrangement. These recurring charges will be assessed in accordance with the billing for all other monthly recurring charges as set forth in Section 9.3 above.

9.5 Nonrecurring Charges. Unless specified otherwise herein, BellSouth shall assess nonrecurring charges, including all application fees, within thirty (30) calendar days of the date that BellSouth provides an Application Response to MCI or on MCI's next scheduled monthly billing statement, if MCI's current month's billing cycle has already closed. Nonrecurring charges associated with the processing of the firm order for collocation space preparation shall be billed by BellSouth within thirty (30) calendar days of BellSouth's confirmation of MCI's BFFO or on MCI's next scheduled monthly billing statement, if MCI's current month's cycle has already closed.

9.6 Space Preparation. Space preparation fees consist of monthly recurring charges for Central Office Modifications and Common Systems Modifications. The monthly recurring charge for Central Office Modification will be assessed per arrangement, per square foot for both caged and cageless physical Collocation Space. The monthly recurring charge for Common Systems Modifications will be assessed per arrangement, per square foot for cageless physical Collocation Space and on a per cage basis for caged physical Collocation Space. These charges recover the costs associated with preparing the Collocation Space, which includes, but is not limited to, the following items: a survey, engineering of the Collocation Space, and design and modification costs for network, building and support systems.

9.7 Floor Space. The Floor Space Charge includes reasonable charges for lighting, HVAC, and other allocated expenses associated with maintenance of the "BellSouth Premises", but does not include any power-related costs incurred by BellSouth. When the Collocation Space is enclosed, MCI shall pay floor space charges based upon the number of square feet so enclosed. The minimum size for caged Collocation Space is 100 square feet. Additional caged Collocation Space may be requested in increments of 50 square feet. When the Collocation Space is not enclosed, MCI shall pay floor space charges based upon the following floor space calculation: [(depth of the equipment lineup in which the rack is placed) + (0.5 x maintenance aisle depth) + (0.5 x wiring aisle depth)] x (width of rack and spacers). For purposes of this calculation, the depth of the equipment lineup shall consider the footprint of equipment racks plus any equipment overhang. BellSouth will assign unenclosed Collocation Space in conventional equipment rack lineups where feasible. In the event MCI's collocated equipment requires special cable racking, isolated grounding or other treatment which prevents placement within conventional equipment rack lineups, MCI shall be required to request an amount of floor space sufficient to accommodate the total equipment arrangement.

9.8 Remote Site Collocation Space Charge**.** This charge includes reasonable charges for air conditioning, ventilation and other allocated expenses associated with maintenance of the Remote Site Location, and includes amperage necessary to power MCI's equipment. If the power requirements for MCI's equipment exceed the capacity available, then such power requirements shall be assessed on an individual case basis. MCI shall pay Remote Site Collocation space charges based upon the number of racks/bays requested. BellSouth will assign Remote Collocation Space in conventional remote site rack/bay lineups where feasible.

9.9 Security Escort. The rates for security escort service are assessed, beginning with the scheduled escort time, pursuant to the fee schedule in Exhibit B. BellSouth will wait for one-half (1/2) hour after the scheduled time for such an escort and MCI shall pay for such half-hour charges in the event MCI fails to show up.

9.10 Cable Record charges. These charges apply for work required to add or change existing cable records assigned to MCI in BellSouth's database systems. The VG/DS0 per cable record charge is for a maximum of 3600 records. The Fiber cable record charge is for a maximum of ninety-nine (99) records. The Cable Record charges are assessed as nonrecurring fees, and will be billed upon receipt of MCI's BFFO.

9.11 Other. If no collocation rate element and associated rate is identified in Exhibit B of this Attachment, the Parties, upon request by either Party, will negotiate the rate for the specific collocation service or function identified in this Attachment; provided, further, that the requested service will not be withheld pending the resolution of such negotiation and MCI agrees to pay the appropriate nonrecurring charges associated with the Initial or Subsequent Application on which the new service or function has been requested, as well as the rates associated with the requested service or function, from the Space Ready Date or Space Acceptance Date, whichever is applicable pursuant to Section 4, for BellSouth's provision of such service or function to MCI. If the negotiation of the applicable rate elements and associated rates have not been completed by the Parties prior to MCI's submission of the Initial or Subsequent Application requesting this new service or function, BellSouth will bill any nonrecurring and monthly recurring rates associated with the requested service or function, as negotiated by the Parties, back to the Space Ready Date or Space Acceptance Date, as noted above, and MCI shall pay these rates from this date.

10 Insurance

10.1 MCI shall, at its sole cost and expense, procure, maintain, and keep in force insurance as specified in this Section and underwritten by insurance companies licensed to do business in the states applicable under this Agreement and having a Best's Insurance Rating of not less than A-.

10.2 MCI shall maintain the following specific coverage:

10.2.1 Commercial General Liability coverage in the amount of ten million dollars ($10,000,000.00) or a combination of Commercial General Liability and Excess/Umbrella coverage totaling not less than ten million dollars ($10,000,000.00). BellSouth shall be named as an Additional Insured on the Commercial General Liability policy as specified herein.

10.2.2 Statutory Workers Compensation coverage and Employers Liability coverage in the amount of one hundred thousand dollars ($100,000.00) each accident, one hundred thousand dollars ($100,000.00) each employee by disease, and five hundred thousand dollars ($500,000.00) policy limit by disease.

10.2.3 All Risk Property coverage on a full replacement cost basis insuring all of MCI's real and personal property situated on or within BellSouth's Central Office location(s).

10.2.4 MCI may elect to purchase business interruption and contingent business interruption insurance, having been advised that BellSouth assumes no liability for loss of profit or revenues should an interruption of service occur.

10.2.5 All policies purchased by MCI shall be deemed to be primary and not contributing to or in excess of any similar coverage purchased by BellSouth. All insurance must be in effect on or before the date equipment is delivered to BellSouth's Premises and shall remain in effect for the term of this Attachment or until all MCI's property has been removed from BellSouth's Premises, whichever period is longer. If MCI fails to maintain required coverage, BellSouth may pay the premiums thereon and seek reimbursement of same from MCI.

10.2.6 MCI shall submit certificates of insurance reflecting the coverage required pursuant to this Section a minimum of ten (10) business days prior to the commencement of any work in the Collocation Space. Failure to meet this interval may result in construction and equipment installation delays. MCI shall arrange for BellSouth to receive thirty (30) business days' advance notice of cancellation from MCI's insurance company. MCI shall forward a certificate of insurance and notice of cancellation/non-renewal to BellSouth at the following address:

BellSouth Telecommunications, Inc.
Attn.: Risk Management Coordinator
17H53 BellSouth Center
675 W. Peachtree Street
Atlanta, Georgia 30375

10.2.7 MCI must conform to recommendations made by BellSouth's fire insurance company to the extent BellSouth has agreed to, or shall hereafter agree to, such recommendations.

10.3 Self-Insurance. If MCI's net worth exceeds five hundred million dollars ($500,000,000), MCI may elect to request self-insurance status in lieu of obtaining any of the insurance required in Sections 10.2.1 and 10.2.2. MCI shall provide audited financial statements to BellSouth thirty (30) calendar days prior to the commencement of any work in the Collocation Space. BellSouth shall then review such audited financial statements and respond in writing to MCI in the event that self-insurance status is not granted to MCI. If BellSouth approves MCI for self-insurance, MCI shall annually furnish to BellSouth, and keep current, evidence of such net worth that is attested to by one of MCI's corporate officers. The ability to self-insure shall continue so long as the MCI meets all of the requirements of this Section. If MCI subsequently no longer satisfies this Section, MCI is required to purchase insurance as indicated by Sections 10.2.1 and 10.2.2.

10.3.1 The net worth requirements set forth in Section 10.3 may be increased by BellSouth from time to time during the term of this Attachment upon thirty (30) calendar days' notice to MCI to at least such minimum limits as shall then be customary with respect to comparable occupancy of BellSouth structures.

10.3.2 Failure to comply with the provisions of this Section will be deemed a material breach of this Attachment.

11 Mechanics Liens

11.1 If any mechanics lien or other liens shall be filed against property of either Party (BellSouth or MCI), or any improvement thereon by reason of or arising out of any labor or materials furnished or alleged to have been furnished or to be furnished to or for the other Party or by reason of any changes, or additions to said property made at the request or under the direction of the other Party, the other Party directing or requesting those changes shall, within thirty (30) business days after receipt of written notice from the Party against whose property said lien has been filed, either pay such lien or cause the same to be bonded off the affected property in the manner provided by law. The Party causing said lien to be placed against the property of the other shall also defend, at its sole cost and expense, on behalf of the other, any action, suit or proceeding which may be brought for the enforcement of such liens and shall pay any damage and discharge any judgment entered thereon.

12 Inspections

12.1 BellSouth may conduct an inspection of MCI's equipment and facilities in the Collocation Space(s) prior to the activation of facilities between MCI's equipment and equipment of BellSouth. BellSouth may conduct an inspection if MCI adds equipment and may otherwise conduct routine inspections at reasonable intervals mutually agreed upon by the Parties. BellSouth shall provide MCI with a minimum of forty-eight (48) hours or two (2) business days, whichever is greater, advance notice of all such inspections. All costs of such inspection shall be borne by BellSouth.

13 Security and Safety Requirements

13.1 Unless otherwise specified, MCI will be required, at its own expense, to conduct a statewide investigation of criminal history records for each MCI employee hired in the past five years being considered for work on the BellSouth Premises, for the states/counties where the MCI employee has worked and lived for the past five years. Where state law does not permit statewide collection or reporting, an investigation of the applicable counties is acceptable. MCI shall not be required to perform this investigation if an affiliated company of MCI has performed an investigation of the MCI employee seeking access, if such investigation meets the criteria set forth above. This requirement will not apply if MCI has performed a pre-employment statewide investigation of criminal history records of the MCI employee for the states/counties where the MCI employee has worked and lived for the past five years or, where state law does not permit a statewide investigation, an investigation of the applicable counties.

13.2 MCI will be required to administer to its personnel assigned to the BellSouth Premises the same level of security training as that applied to BellSouth's own employees and may be either provided by BellSouth, or provided by MCI and meeting criteria defined by BellSouth and given MCI.

13.3 MCI shall provide its employees and agents with picture identification, which must be worn and visible at all times while in the Collocation Space or other areas in or around the BellSouth Premises. The photo identification card shall bear, at a minimum, the employee's name and photo and MCI's name. BellSouth reserves the right to remove from a BellSouth Premises any employee of MCI not possessing identification issued by MCI or who has violated any of BellSouth's policies as outlined in the CLEC Security Training documents. MCI shall not hold BellSouth harmless for any damages resulting from such removal of its personnel from a BellSouth Premises.

13.4 MCI shall not assign to the BellSouth Premises any personnel with records of felony criminal convictions. MCI shall not assign to the BellSouth Premises any personnel with records of misdemeanor convictions, except for misdemeanor traffic and pedestrian violations, without advising BellSouth of the nature and gravity of the offense(s). BellSouth reserves the right to refuse building access to any MCI personnel who have been identified to have misdemeanor criminal (non-traffic/-pedestrian) convictions, provided, however, that such refusal has a reasonable basis. MCI shall be deemed to have complied with the requirements of this section pertaining to an individual employee(s), if, in good faith, MCI requests and receives from a competent vendor of background checking services a background check on the pertinent employee(s). Notwithstanding the foregoing, in the event that MCI chooses not to advise BellSouth of the nature and gravity of any misdemeanor conviction, MCI may, in the alternative, certify to BellSouth that it shall not assign to the BellSouth Premises any personnel with records of misdemeanor convictions (other than misdemeanor traffic and pedestrian violations).

13.4.1 MCI shall not knowingly assign to the BellSouth Premises any individual who was a former employee of BellSouth and whose employment with BellSouth was terminated for a criminal offense whether or not BellSouth sought prosecution of the individual for the criminal offense.

13.4.2 MCI shall not knowingly assign to the BellSouth Premises any individual who was a former supplier of BellSouth and whose access to a BellSouth Premises was revoked due to commission of a criminal offense whether or not BellSouth sought prosecution of the individual for the criminal offense.

13.5 For each MCI employee or agent hired by MCI within five years of being considered for work on the "BellSouth Premises", who requires access to a BellSouth Premises pursuant to this Attachment, MCI shall furnish BellSouth, prior to an employee or agent gaining such access, a certification that the aforementioned background check and security training were completed. The certification will contain a statement that no felony convictions were found and certify that the employee completed the security training. If the employee's criminal history includes misdemeanor convictions, MCI will disclose the nature of the convictions to BellSouth at that time. In the alternative, MCI may certify to BellSouth that it shall not assign to the BellSouth Premises any personnel with records of misdemeanor convictions other than misdemeanor traffic or pedestrian violations.

13.6 For all other MCI employees requiring access to a BellSouth Premises pursuant to this Attachment, MCI shall furnish BellSouth, prior to an employee gaining such access, a certification that the employee is not subject to the requirements of Section 13.5 above and that security training was completed by the employee.

13.7 At BellSouth's request, MCI shall promptly remove from the BellSouth Premises any employee of MCI BellSouth does not wish to grant access to a BellSouth Premises 1) pursuant to any investigation conducted by BellSouth or 2) prior to the initiation of an investigation, if an employee of MCI is found interfering with the property or personnel of BellSouth or another collocated telecommunications carrier, provided that an investigation shall promptly be commenced by BellSouth.

13.8 Security Investigations. The Parties shall cooperate fully with one another's investigations, including interviews, with either Party's employees, agents, or contractors into allegations of wrongdoing or criminal conduct committed by or involving the other Party's employees, agents, or contractors. The Security departments of each Party shall be the single point of contact regarding said investigations. Additionally, the Parties reserve the right to bill one another for all costs associated with investigations involving their employees, agents, or contractors if it can be reasonably established that their employees, agents, or contractors are responsible for the alleged act. The Parties shall bill one another for property which is stolen or damaged where an investigation determines the culpability of the responsible Party's employees, agents, or contractors. MCI shall notify BellSouth in writing immediately in the event that it discovers one of its employees already working on the BellSouth Premises is a possible security risk. The Party, who is the employer, shall discipline, consistent with its employment practices up to and including removal from the BellSouth Premises, any employee found to have violated the security and safety requirements of this section. MCI shall hold BellSouth harmless for any damages resulting from such removal of MCI's personnel from a BellSouth Premises.

13.8.1 BellSouth will use its best efforts to prevent harm or damage to MCI's property and MCI's employees and contractors while they are on BellSouth's Premises. BellSouth will restrict access to MCI equipment by BellSouth employees and contractors and third parties to the extent necessary to perform their job functions. Upon request from MCI's security department, for the

purposes of investigating an incident within the Premises, affecting MCI's space or equipment, BellSouth will provide documentation regarding access to the Premises.

13.8.2 While in MCI space, BellSouth will comply at all times with its own security and safety procedures and requirements.

13.8.3 BellSouth will ensure that the area which houses MCI equipment is adequately secured and monitored to prevent unauthorized entry. BellSouth will immediately notify MCI's listed emergency contact identified on MCI's cage or equipment of any actual or attempted security breaches to the MCI Collocation Space to the extent BellSouth becomes aware of such breaches.

13.9 Use of Supplies. Unauthorized use of equipment, supplies or other property by either Party, whether or not used routinely to provide telephone service will be strictly prohibited and handled appropriately. Reasonable costs may be associated with such unauthorized use may be charged to the offending Party, as may be all reasonable associated investigative costs.

13.10 Use of Official Lines. Except for non-toll calls necessary in the performance of their work, neither Party shall use the telephones of the other Party on BellSouth's Premises. Charges for unauthorized telephone calls may be charged to the offending Party, as may be all reasonable associated investigative costs.

13.11 Accountability. Full compliance with the Security requirements of this Section shall in no way limit the accountability of either Party to the other for the improper actions of its employees.

14 Destruction of Collocation Space

14.1 Force Majeure. In the event of a Force Majeure under the General Terms and Conditions, a Collocation Space is wholly or partially damaged by fire, windstorm, tornado, flood or by similar causes to such an extent as to be rendered wholly unsuitable for MCI's permitted use hereunder, then either Party may elect within ten (10) calendar days after such damage, to terminate occupancy of the damaged Collocation Space, and if either Party shall so elect, by giving the other written notice of termination, both Parties shall stand released of and from further liability under the terms hereof. If the Collocation Space shall suffer only minor damage and shall not be rendered wholly unsuitable for MCI's permitted use, or is damaged and the option to terminate is not exercised by either Party, BellSouth covenants and agrees to proceed promptly without expense to MCI, except for improvements not to the property of BellSouth, to repair the damage. BellSouth shall have a reasonable time within which to rebuild or make any repairs. MCI may, at its own expense, accelerate the rebuild of its collocated space and equipment provided however that a BellSouth Certified Supplier is used and the necessary space preparation has been completed. If MCI's acceleration of the project increases the cost of the project, then those additional charges will be incurred by MCI. Where allowed and where practical, MCI may erect a temporary facility while BellSouth rebuilds or makes repairs. In all cases where the Collocation Space shall be rebuilt or repaired, MCI shall be entitled to a proportionate reduction or abatement of rent and other charges, depending upon the unsuitability of the Collocation Space for MCI's permitted use, until such Collocation Space is fully repaired and restored and MCI's equipment installed therein (but in no event later than thirty (30) calendar days after the Collocation Space is fully repaired and restored). Where MCI has placed an Adjacent Arrangement pursuant to Section 3.4, MCI shall have the sole responsibility to repair or replace said Adjacent Arrangement provided herein. Pursuant to this Section, BellSouth will restore the associated services to the Adjacent Arrangement.

15 Eminent Domain

15.1 If the whole of a Collocation Space or Adjacent Arrangement shall be taken by any public authority under the power of eminent domain, then this Attachment shall terminate with respect to such Collocation Space or Adjacent Arrangement as of the day possession shall be taken by such public authority and rent and other charges for the Collocation Space or Adjacent Arrangement shall be paid up to that day with proportionate refund by BellSouth of such rent and charges as may have been paid in advance for a period subsequent to the date of the taking. If any part of the Collocation Space or Adjacent Arrangement shall be taken under eminent domain, BellSouth and MCI shall each have the right to terminate this Attachment with respect to such Collocation Space or Adjacent Arrangement and declare the same null and void, by written notice of such intention to the other Party within ten (10) calendar days after such taking.

15.2 Confidential Information

15.2.1 Treatment of Confidential Information is subject to the provisions of the General Terms and Conditions of this Agreement.

15.3 Compliance with Performance Measurements

15.3.1 BellSouth shall comply with the performance measurements set forth in Attachment 9. BellSouth shall compensate MCI in accordance with Attachment 9 for any delays in the negotiated completion and turnover dates.

16 Nonexclusivity

16.1 MCI understands that this Attachment is not exclusive and that BellSouth may enter into similar agreements with other Parties. Assignment of space pursuant to all such agreements shall be determined by space availability and made on a first come, first served basis.

EXHIBIT A

ENVIRONMENTAL AND SAFETY PRINCIPLES

The following principles provide basic guidance on environmental and safety issues when applying for and establishing Physical Collocation arrangements.

1 GENERAL PRINCIPLES

1.1 Compliance with Applicable Law. BellSouth and MCI agree to comply with applicable federal, state, and local environmental and safety laws and regulations including U.S. Environmental Protection Agency (USEPA) regulations issued under the Clean Air Act (CAA), Clean Water Act (CWA), Resource Conservation and Recovery Act (RCRA), Comprehensive Environmental Response, Compensation and Liability Act (CERCLA), Superfund Amendments and Reauthorization Act (SARA), the Toxic Substances Control Act (TSCA), and Occupational Safety and Health Administration (OSHA) regulations issued under the Occupational Safety and Health Act of 1970, as amended and National Fire Protection Association (NFPA) and National Electrical Codes (NEC) and the National Electric Safety Codes (NESC) (Applicable Laws). Each Party shall notify the other if compliance inspections are conducted by regulatory agencies and/or citations are issued that relate to any aspect of this Attachment.

1.2 Notice. BellSouth and MCI shall provide notice to the other, including Material Safety Data Sheets (MSDSs), of known and recognized physical hazards or Hazardous Chemicals existing on site or brought on site. A Hazardous Chemical inventory list is posted on an OSHA Poster and updated annually at each Central Office. This Poster is normally located near the front entrance of the building or in the lounge area. Each Party is required to provide specific notice for known potential Imminent Danger conditions. MCI should contact 1-800-743-6737 for any BellSouth MSDS required.

1.3 Practices/Procedures. BellSouth may make available additional environmental control procedures for MCI to follow when working at a "BellSouth Premises" (See Section 2, below). These practices/procedures will represent the regular work practices required to be followed by the employees and suppliers of BellSouth for environmental protection. MCI will require its suppliers, agents and others accessing the "BellSouth Premises" to comply with these practices. Section 2 lists the Environmental categories where BST practices should be followed by MCI when operating in the "BellSouth Premises".

1.4 Environmental and Safety Inspections. BellSouth reserves the right to inspect the MCI space with proper notification. BellSouth reserves the right to stop any MCI work operation that imposes Imminent Danger to the environment, employees or other persons in the area on BellSouth's Premises.

1.5 Hazardous Materials Brought On Site. Any hazardous materials brought into, used, stored or abandoned at the "BellSouth Premises" by MCI are owned by MCI. MCI will indemnify BellSouth for claims, lawsuits or damages to persons or property caused by these materials. Without prior written BellSouth approval, no substantial new safety or environmental hazards can be created by MCI or different hazardous materials used by MCI at a "BellSouth Premises". MCI must demonstrate adequate emergency response capabilities for its materials used or remaining at the "BellSouth Premises".

1.6 Spills and Releases. When contamination is discovered at a "BellSouth Premises", either Party discovering the condition must notify the other Party. All Spills or Releases of regulated

materials will immediately be reported by MCI to BellSouth.

1.7 Coordinated Environmental Plans and Permits. BellSouth and MCI will coordinate plans, permits or information required to be submitted to government agencies, such as emergency response plans, spill prevention control and countermeasures (SPCC) plans and community reporting. If fees are associated with filing, BellSouth and MCI will develop a cost sharing procedure. If BellSouth's permit or EPA identification number must be used, MCI must comply with all of BellSouth's permit conditions and environmental processes, including environmental "best management practices (BMP)" (see Section 2, below) and/or selection of BST disposition vendors and disposal sites.

1.8 Environmental and Safety Indemnification. BellSouth and MCI shall indemnify, defend and hold harmless the other Party from and against any claims (including, without limitation, third-party claims for personal injury or death or real or personal property damage), judgments, damages (including direct and indirect damages and punitive damages), penalties, fines, forfeitures, costs, liabilities, interest and losses arising in connection with the violation or alleged violation of any Applicable Law or contractual obligation or the presence or alleged presence of contamination arising out of the acts or omissions of the indemnifying Party, its agents, suppliers, or employees concerning its operations at the "BellSouth Premises".

1.8.1 At MCI's written request BellSouth shall provide within ten (10) business days of such request, any information in its possession or available to it regarding the environmental conditions of the space provided for placement of equipment and interconnection. Information is considered "available" under this Agreement if it is in BellSouth's possession, or the possession of a current agent, contractor, or employee of BellSouth's.

1.8.2 Subsequent to the information requested and received by MCI in Section 1.8.1 above, BellSouth shall allow MCI to perform any environmental site investigations, including, but not limited to, asbestos surveys, which MCI deems to be necessary in support of its collocation needs, at MCI's expense. MCI shall notify BellSouth in writing if the results show an environmental violation of state or city standards or ordinances, in order to permit BellSouth to perform an investigation to ensure compliance with the law. Any and all such environmental site investigations performed by MCI will be performed by MCI's BellSouth Certified Supplier, who is certified to perform environmental site investigations.

1.8.3 MCI's BellSouth Certified Supplier shall comply with all requirements of this Agreement and Applicable Law, including but not limited to, local, state and federal environmental requirements related to the installation of MCI's equipment.

2 CATEGORIES FOR CONSIDERATION OF ENVIRONMENTAL ISSUES

2.1 When performing functions that fall under the following Environmental categories on BellSouth's Premises, MCI agrees to comply with the applicable sections of the current issue of BellSouth's Environmental and Safety Methods and Procedures (M&Ps), incorporated herein by this reference. MCI further agrees to cooperate with BellSouth to ensure that MCI's employees, agents, and/or suppliers are knowledgeable of and satisfy those provisions of BellSouth's Environmental M&Ps which apply to the specific Environmental function being performed by MCI, its employees, agents and/or suppliers.

2.2 The most current version of the reference documentation must be requested from MCI's BellSouth Regional Contract Manager (RCM) (f/k/a Account Team Collocation Coordinator – ATCC).

ENVIRONMENTAL CATEGORIES	ENVIRONMENTAL ISSUES	ADDRESSED BY THE FOLLOWING DOCUMENTATION
Disposal of hazardous material or other regulated material (e.g., batteries, fluorescent tubes, solvents & cleaning materials)	Compliance with all applicable local, state, & federal laws and regulations Pollution liability insurance EVET approval of supplier	Std T&C 450 Fact Sheet Series 17000 Std T&C 660-3 Approved Environmental Vendor List (Contact RCM Representative)
Emergency response	Hazmat/waste release/spill fire safety emergency	Fact Sheet Series 17000 Building Emergency Operations Plan (EOP) (specific to and located on BellSouth's Premises)
Contract labor/outsourcing for services with environmental implications to be performed on "BellSouth Premises" (e.g., disposition of hazardous material/waste; maintenance of storage tanks)	Compliance with all applicable local, state, & federal laws and regulations Performance of services in accordance with BST's environmental M&Ps Insurance	Std T&C 450 Std T&C 450-B (Contact RCM Representative for copy of appropriate E/S M&Ps.) Std T&C 660
Transportation of hazardous material	Compliance with all applicable local, state, & federal laws and regulations Pollution liability insurance EVET approval of supplier	Std T&C 450 Fact Sheet Series 17000 Std T&C 660-3 Approved Environmental Vendor List (Contact RCM Representative)
Maintenance/operations work which may produce a waste Other maintenance work	Compliance with all applicable local, state, & federal laws and regulations Protection of BST employees and equipment	Std T&C 450 29CFR 1910.147 (OSHA Standard) 29CFR 1910 Subpart O (OSHA Standard)
Janitorial services	All waste removal and disposal must conform to all applicable federal, state and local regulations All Hazardous Material and Waste Asbestos notification and protection	Procurement Manager (CRES Related Matters)-BST Supply Chain Services Fact Sheet Series 17000

	of employees and equipment	GU-BTEN-001BT, Chapter 3 BSP 010-170-001BS (Hazcom)
Manhole cleaning	Compliance with all applicable local, state, & federal laws and regulations Pollution liability insurance EVET approval of supplier	Std T&C 450 Fact Sheet 14050 BSP 620-145-011PR Issue A, August 1996 Std T&C 660-3 Approved Environmental Vendor List (Contact RCM Representative)
Removing or disturbing building materials that may contain asbestos	Asbestos work practices	GU-BTEN-001BT, Chapter 3 For questions regarding removing or disturbing materials that contain asbestos, call the BellSouth Building Service Center: AL, MS, TN, KY & LA (local area code) 557-6194 FL, GA, NC & SC (local area code) 780-2740

3 DEFINITIONS

3.1 Generator. Under RCRA, the person whose act produces a Hazardous Waste, as defined in 40 CFR 261, or whose act first causes a Hazardous Waste to become subject to regulation. The Generator is legally responsible for the proper management and disposal of Hazardous Wastes in accordance with regulations.

3.2 Hazardous Chemical. As defined in the U.S. Occupational Safety and Health (OSHA) hazard communication standard (29 CFR 1910.1200), any chemical which is a health hazard or physical hazard.

3.3 Hazardous Waste. As defined in Section 1004 of RCRA.

3.4 `Imminent Danger. Any conditions or practices at a "BellSouth Premises" which are such that a danger exists which could reasonably be expected to cause immediate death or serious harm to people or immediate significant damage to the environment or natural resources.

3.5 Spill or Release. As defined in Section 101 of CERCLA.

4 ACRONYMS

4.1 RCM – Regional Collocation Manager (f/k/a Account Team Collocation Coordinator)

4.2 BST – BellSouth Telecommunications

4.3 CRES – Corporate Real Estate and Services (formerly PS&M)

4.4 DEC/LDEC - Department Environmental Coordinator/Local Department Environmental Coordinator

4.5 E/S – Environmental/Safety

4.6 EVET - Environmental Vendor Evaluation Team

4.7 GU-BTEN-001BT - BellSouth Environmental Methods and Procedures

4.8 NESC - National Electrical Safety Codes

4.9 P&SM - Property & Services Management

4.10 Std T&C - Standard Terms & Conditions

EXHIBIT B
RATES

SEPARATE ATTACHMENT

EXHIBIT C

MICROWAVE TRANSMISSION FACILITIES IN CONJUNCTION WITH PHYSICAL COLLOCATION

1 Scope of Exhibit

1.1 Where technically feasible, BellSouth will allow the placement of microwave transmission equipment on the roofs or other suitable exterior spaces of Central Office buildings owned by BellSouth. The microwave transmission facilities will be used as an entrance facility in conjunction with a physical collocation arrangement located within the BellSouth Central Office for the purpose of physical collocation. Such equipment will be limited to that necessary for the interconnection of MCI's microwave transmission facilities to its physical collocation arrangement for access to BellSouth's unbundled network elements**.**

1.2 Microwave transmission facilities include placement of supporting masts, non-penetrating roof mounts ("NPRM"), penetrating pipe stands, parapet mounts, and microwave antenna(e) on the roof top or other suitable exterior spaces of BellSouth's Central Offices, but does not include the construction of towers. The Parties will work together to determine the preferable type of antenna mount and will consider such factors as permitting requirements, roof maintenance issues, building structural capacity, and any other relevant factors; however, BellSouth shall have final approval of the type of antenna mount that will be used.

1.2.1 MCI is limited by building and structural support constraints for the number of antenna(e) which can be placed on a roof mount, pipe stand, or parapet mount. The diameter of the microwave radio antenna(e) will be subject to a height limitation of twenty (20) feet above the building or point of attachment, subject to line-of-sight, safety, and structural engineering guidelines, (e.g., weight, wind load). Such equipment will be subject to a structural analysis to be performed by MCI through the use of a BellSouth Certified Supplier at MCI's sole expense, to ensure that the equipment does not overload the building structure. A copy of the structural analysis shall be provided to BellSouth for its review and evaluation. If the structural analysis determines and recommends that any structural reinforcement is required in order to accommodate the placement of the requested diameter, weight, and height of such microwave antenna(e), MCI will not be allowed to place such microwave antenna(e) on the roof of the Bellsouth Central Office. MCI agrees that the height of the structure will be no greater than the minimum required to accommodate line of sight requirements. At no time shall an antenna(e) be directed across open roof space without approval of BellSouth, which shall not be unreasonably withheld.

1.3 <u>No Property Right Conferred</u>. Notwithstanding anything contained herein to the contrary, the placement of microwave transmission facilities on Bellsouth's rooftop or other suitable exterior spaces and used in conjunction with the physical collocation arrangement shall not confer or be deemed to confer any property interest or right in BellSouth's property, and MCI hereby acknowledges that the rights conferred hereunder shall constitute merely a non-exclusive license to use a portion of BellSouth's property solely for the purposes set forth herein. Title to MCI's microwave transmission facilities equipment shall remain with MCI as the property of MCI and shall not become fixtures to BellSouth's property.

1.4 Bonding and Grounding. MCI, through the use of a BellSouth Certified Supplier, will be responsible for the provisioning of the grounding and bonding of MCI microwave transmission facilities, and any additional rooftop ground necessary to protect BellSouth's equipment or other occupants' equipment located in the Central Office. Collocated microwave transmission equipment must comply with extraordinary bonding and grounding requirements as addressed in Section 2.5. These requirements may necessitate the utilization of more interior Central Office floor space to accommodate the requested arrangement than would normally be required to accommodate an equal quantity of telecommunications equipment racks that would not be subject to these bonding and grounding requirements. When bonding and grounding requirements necessitate the utilization of floor space in excess of the requested caged collocation space or cageless collocation space as calculated per the formula in Section 9.8 of this Attachment 4, floor space charges will be based upon the minimum amount of floor space required to accommodate the requested collocated equipment arrangement and comply with the requirements of Section 2.5.

2 Provisioning of Microwave Transmission Facilities

2.1 Site Visit to Determine Line of Sight. MCI will provide a site visit request (Site Visit Request) in writing to BellSouth prior to the submission of an application for physical collocation within the Central Office, setting forth the name(s) of the BellSouth Central Office buildings MCI wishes to visit for the potential placement of microwave transmission facilities. The site visit will take place within fifteen (15) business days of receipt of MCI's Site Visit Request by BellSouth or as soon thereafter as can be scheduled by the Parties. Such site visit will consist of a MCI representative(s) and appropriate BellSouth personnel visiting a BellSouth Central Office building for the purpose of MCI determining whether an unobstructed line-of-sight is technically feasible from the rooftop or other suitable exterior spaces of the BellSouth Central Office. Such site visit will not obligate MCI to request, or BellSouth to provide, microwave transmission facilities at a particular Central Office location. When MCI submits an application for physical collocation, which includes a request for microwave transmission facilities, BellSouth will determine the feasibility of installing microwave equipment for the particular Central Office based on information that will be provided in the application submitted by MCI. MCI will also be charged for the reasonable cost BellSouth incurs for travel, if necessary, for each site visit. The site visit fee will be billed as a one time charge per visit, per Central Office, after the site visit is completed. The site visit fee to determine line of sight is set forth in Exhibit B of this Attachment 4.

2.2 Line of Sight. BellSouth will manage its roof space on a first-come, first-served basis. The Parties acknowledge that microwave transmission facilities require an unobstructed line-of-sight. MCI will be responsible for making an unobstructed line-of-sight determination. Unobstructed line-of-sight will be provided by BellSouth where technically feasible but is not guaranteed to be available. BellSouth will work cooperatively with MCI in determining suitable space for MCI's equipment. If BellSouth requires a building enhancement or modification where structural reinforcement is not required, or if the placement of additional equipment obstructs MCI's existing line of sight, BellSouth will work with MCI to move the antenna mount or raise the height of the antenna mount not to exceed the 20 foot height limitations set forth in Section 1.2.1 of this Exhibit C for a clear line of sight. BellSouth will be responsible for the costs of this modification. BellSouth will not be responsible for MCI's loss of line of sight or the necessity for removal of MCI's equipment, if through no fault of its own, BellSouth determines that a vertical building addition is needed due to building exhaust. BellSouth shall notify MCI six months prior to the start of the BellSouth building addition so MCI can arrange to remove its microwave transmission facilities using a BellSouth Certified Supplier at MCI's sole cost and expense.

2.2.1 If a third party requests to place microwave transmission equipment on the roof that obstructs an existing line of sight, the third party application will be denied unless all three parties mutually

agree to move an existing arrangement to allow for a clear line of sight, not to exceed the 20 feet height limitation referenced in section 1.2.1 of this Exhibit C. The costs of any movement of an existing arrangement will be borne by the third party.

2.3 Structural Analysis. Prior to the submission of an application for physical collocation with microwave transmission facilities and subsequent to the site visit to determine line of sight, MCI, at its sole expense, will be required to provide a structural analysis to BellSouth.

2.3.1 If MCI, or its BellSouth Certified Supplier, has determined that a Site Visit is necessary to perform the structural analysis referenced in 1.2.1 above, MCI will submit a site visit request (Site Visit Request) in writing to BellSouth prior to the submission of an application for physical collocation within the Central Office, setting forth the name(s) of the BellSouth Central Office buildings MCI wishes to visit for the purpose of performing a structural analysis for the potential placement of microwave transmission facilities. The site visit will take place within fifteen (15) business days of receipt of MCI's Site Visit Request by BellSouth or as soon thereafter as can be scheduled by the Parties. Such site visit will consist of a MCI representative(s) and appropriate BellSouth personnel visiting a BellSouth Central Office building for the purpose of performing the structural analysis. Such site visit will not obligate MCI to request, or BellSouth to provide, microwave transmission facilities at a particular Central Office location. The fee for the site visit to perform the structural analysis will be billed as a onetime charge per visit, per Central Office, after the Structural Analysis site visit is completed. The site visit fee to perform the structural analysis is set forth in Exhibit B of Attachment 4.

2.3.2 If MCI's BellSouth Certified Supplied is able to perform the structural analysis without visiting the site, the fee for the site visit to perform the structural analysis will be waived.

2.3.3 A copy of the structural analysis must be submitted with the application for physical collocation when microwave transmission facilities are requested if the application is to be bona fide.

2.4 Antenna Placement. MCI is limited to the placement of two (2) microwave antenna(e) within its designated rooftop space, unless otherwise agreed to by the Parties. MCI must submit an application for physical collocation with microwave transmission facilities with an Initial Application Fee for Microwave Transmission Facilities or a Subsequent Application Fee for Microwave Transmission Facilities prior to placing initial or additional equipment, or moving its existing microwave transmission facility equipment outside of MCI's designated rooftop space. MCI may not construct improvements or make "Major Alterations" to BellSouth's rooftop space or its microwave transmission facilities without prior written approval from BellSouth, which will not be unreasonably withheld. Provisioning intervals will follow Section 7 of this Attachment 4. "Major Alterations" shall include but not be limited to: (i) additional construction by MCI of support equipment within its rooftop space, and (ii) any modification to the rooftop space. Major Alterations shall not include (i) replacement of mounted equipment with like-sized and weight or smaller mounted equipment of similar functionality, and (ii) routine repairs and maintenance to such microwave transmission facilities. BellSouth, or its designated BellSouth Certified Supplier, shall perform all necessary work associated with the microwave transmission facilities for the physical collocation arrangement involving power and building modifications unless otherwise agreed to by the Parties.

2.5 Equipment Safety Requirements. MCI's microwave equipment must comply with the following safety requirements:

- Telcordia Network Equipment Building System (NEBS) Requirements, Criteria Level 1, as outlined in Telcordia Special Report SR-3580, Issue 1,
- FCC OET Bulletin 65 dated 08/97

- Bellsouth Engineering and Installation Standards – Central Office Equipment, TR 73503-11, Section 6.14
- BellSouth Building Construction and Fire Safety Standard 16170- Roof (BellSouth proprietary document)
- American National Standards Institute:
  - Telecommunications – Electrical Protection of Communications Towers and Associated Structures ANSI T1.334-2002 Telecommunications
  - Electrical Protection of Telecommunications Central Offices and similar Type Facilities. ANSI T1.313-2003

2.5.1 The operation of MCI's microwave transmission facilities equipment shall also comply with all applicable federal and state radio frequency guidelines.

2.6 Power/environmental requirements for microwave transmission facilities. BellSouth will not provide power or environmental support to the roof space or other suitable exterior spaces to support MCI's microwave transmission facilities. If BellSouth agrees in response to a specific request by MCI to provide AC power to the roof space or other suitable exterior spaces, MCI will bear all associated costs as specified by BellSouth to provide such services. This cost for BellSouth to provide AC power will be determined on an individual case basis (ICB). Monthly recurring charges for AC power will be billed as either 120V Single Phase AC power or 240V Single Phase AC power at the rates indicated in Exhibit B to this Attachment 4.

2.7 Cable Provisioning. MCI is responsible for providing and running the cable from the radio frequency equipment to their physical Collocation Space through the use of a BellSouth Certified Supplier. BellSouth will be responsible for determining and providing the necessary dedicated conduit. The costs for providing dedicated conduit shall be assessed as an ICB charge with 75% of the estimated charge billed at the time a firm order is submitted.

2.8 Equipment and Testing. MCI shall be responsible for providing, at its sole expense, the antenna(e), coaxial cable, brackets, connectors, antenna support structure, grounding and bonding materials, and weather-proofing materials for such support structure or antenna(e) required for the microwave transmission facilities used in conjunction with its physical collocation arrangement in the Central Office. MCI shall also be solely responsible for final adjustments (e.g., pointing) of the antenna(e).

3 Application Process

3.1 MCI shall submit an application for Physical Collocation with a request to use microwave transmission facilities for each Central Office building where MCI seeks to use microwave transmission facilities in conjunction with its physical collocation arrangement in the Central Office.

4 Preparation of Estimate/Application Response

4.1 If BellSouth concludes that the use of rooftop/exterior space which provides MCI with unobstructed line-of-sight is not technically feasible, BellSouth will provide MCI a written explanation of such technical infeasibility according to intervals set forth in Attachment 4 or negotiated intervals from BellSouth 's receipt of the collocation application including those cases where BellSouth's known business plans provide for, or include, an addition to the building which would impact the line of sight.

4.2 If rooftop/exterior space is available BellSouth shall provide MCI with an estimate of the cost to accommodate the microwave transmission facilities requested in conjunction with its physical collocation arrangement at the same time BellSouth provides its interior physical collocation Application Response. After receiving MCI's single, complete and accurate application, BellSouth will provide, as more fully described below, an estimate/Application Response including the monthly recurring charge pursuant to the rate as set forth in Exhibit B to this Attachment 4. The estimate shall reflect the specifications submitted by MCI and may change based on the actual field conditions encountered during construction. The estimate/Application Response shall set forth separate estimated charges for the following work related to the installation of the microwave transmission facilities:

4.2.1 Roof Inspection. BellSouth may require a roof inspection at any site where MCI requests microwave transmission facilities in conjunction with a physical collocation arrangement within the Central Office. BellSouth intends to use a BellSouth Certified Supplier which may be accompanied by BellSouth personnel. The fee for the roof inspection, which includes all associated travel costs, shall be assessed as an ICB charge with 75% of the estimated charge billed at the time a firm order is submitted**.** . MCI will bear the reasonable cost of the inspection including reasonable travel costs if any. Such roof inspection does not obligate BellSouth to allow microwave transmission facilities at a particular site.

4.2.2 Security Escort. Escorted access to the roof will be provided as necessary by BellSouth pursuant to Section 9.10 of this Attachment 4.

4.2.3 Special Security Construction**.** If BellSouth determines that new secured access to the microwave transmission facilities is necessary, the costs associated with the construction of such access shall be assessed as an ICB charge with 75% of the estimated charge billed at the time a Firm Order is submitted**.**

4.2.4 Architectural Plan Review. This shall be the reasonable sum of the hourly charges of BellSouth Certified Suppliers employed by BellSouth to review MCI's plans for the microwave transmission facilities to be used in conjunction with MCI's physical Collocation Space. The fee for the architectural plan review, which includes all associated travel costs, shall be assessed as an ICB charge with 75% of the estimated charge billed at the time a firm order is submitted**.**

4.2.5 Permitting Review. This shall be the reasonable sum of the hourly charges of BellSouth personnel and/or BellSouth Certified Suppliers whose time is necessary and actually spent reviewing permitting material used by MCI in the permitting process. BellSouth shall have final approval authority on all proposed conditions, which shall not be unreasonably withheld, or imposed by relevant federal, state, or local jurisdictions and BellSouth shall have the right to be represented at all hearings in connection with governmental approvals. The fee for the review of the permitting materials, which includes all associated travel costs, shall be assessed as an ICB charge with 75% of the estimated charge billed at the time a firm order is submitted**.**

4.2.6 Exterior (and Related Interior) Building Modification Work. BellSouth will provide MCI with an estimate for the cost of design services, labor, and materials that BellSouth will incur to provide conduit from MCI's radio frequency equipment to their physical Collocation Space within the Central Office, or any other exterior or related interior building modification that may be required. The reasonable fee for any modifications to the building, both exterior and related interior, shall be assessed as an ICB charge with 75% of the estimated charge billed at the time a Firm Order is submitted.

4.2.7 Supervision of MCI's BellSouth Certified Supplier. This shall be the reasonable sum of the hourly charges, if necessary, of any BellSouth employees, or BellSouth Certified Suppliers

employed by BellSouth to monitor the microwave antenna support structure installation performed by MCI's BellSouth Certified Supplier. The level of BellSouth's employees or BellSouth's Certified Suppliers shall be commensurate with the requirements for supervising the project and monitoring construction. The fee for supervision by a general contractor shall be assessed as an ICB charge with 75% of the estimated charge billed at the time a firm order is submitted.

4.3 All estimates shall be valid for thirty (30) days from issuance, and MCI shall accept, reject or request changes within such time period, unless an extension is requested in writing by MCI and agreed to by BellSouth. To accept an estimate, MCI shall submit a BFFO and shall pay BellSouth 75% of the total estimated charges at BFFO. True-up will begin within ninety (90) days after space completion.

4.4 The fees for the Initial or Subsequent Request for Microwave Transmission Facilities, which are set forth in Exhibit B, cover the cost of the work time and work efforts performed by BellSouth to review and evaluate MCI's request for placement, additions to, or the removal of microwave transmission facilities. If MCI requests any additions, removals or changes to their physical collocation arrangement located within the Central Office, the appropriate application fee for physical collocation as set forth in Section 7.3 of this Attachment 4 will apply in addition to the appropriate fee for the Initial or Subsequent Request for Microwave Transmission Facilities. If Bellsouth cannot accommodate MCI's request for microwave transmission facilities, MCI will have the option of revising their application to eliminate entrance facilities or to request cable entrance facilities. If MCI chooses to revise their application to request no entrance facilities or to reflect the use of cable entrance facilities in lieu of microwave entrance facilities, the appropriate Subsequent application Fee for physical collocation shall apply. Application fees will be billed at the time the Application Response is provided.

5 Pre-Design Meeting

5.1 Unless otherwise agreed to by the Parties, a joint planning meeting or other method of joint planning between BellSouth and MCI will commence within a maximum of twenty (20) calendar days from BellSouth's receipt of a BFFO and the payment of agreed upon fees. At such meeting, the Parties will agree to the preliminary design of the microwave transmission facilities for Collocation Space and the equipment configuration requirements as reflected in the application and affirmed in the BFFO. The microwave transmission facilities for Collocation Space completion time period will be provided to MCI during the joint planning meeting or as soon as possible thereafter. BellSouth will complete all design work following the joint planning meeting. This will be the same meeting that takes place for the interior collocation arrangement.

6 Responsibilities of the Parties

6.1 MCI shall obtain any and all applicable and necessary permits, variances, licenses, approvals and authorizations from governmental agencies with jurisdiction, including without limitation, use permits and buildings permits, FCC licenses and FAA approval, if required, to operate and maintain MCI's facilities during the term of this Agreement. In addition, some of BellSouth's Central Offices are located within the geographic boundaries of historical preservation areas. If MCI applies for placement of microwave transmission equipment at a BellSouth Central Office located within a historical preservation area, MCI shall obtain any and all applicable and necessary permits, variances, licenses, approvals and authorizations from the historical preservation organization having authority over the appropriate historical preservation area.

6.2 MCI shall not use BellSouth's property or permit MCI's agents or BellSouth Certified Suppliers to do anything in or about the Central Office(s) in conflict with any applicable law affecting the

condition, use or occupancy of the property or the installation, operation or maintenance of MCI's microwave transmission facilities for collocation equipment. MCI shall not commit any public or private nuisance or any other act or practice which might or would materially disturb the quiet enjoyment of any occupant of nearby properties.

6.3 Notwithstanding any other provision in this Exhibit C, MCI hereby acknowledges that BellSouth may have existing wireless communications facilities of its own or of other tenants or licensees on or at BellSouth's Central Office(s), and/or BellSouth may desire from time to time throughout the term of this Agreement to enter into agreements with other wireless communications providers for the installation, operation and maintenance of communications facilities on or at certain BellSouth properties ("Other Wireless Carriers"). MCI shall cooperate with BellSouth and all Other Wireless Carriers so as to reasonably accommodate the needs and requirements of such Other Wireless Carriers with respect to the installation, operation, use and maintenance of their equipment and facilities, and all necessary alterations, modifications and other improvements to BellSouth's property, including utility connections and access. Subject to ownership of any exclusive frequency rights, MCI's facilities shall not physically, electronically, or inductively interfere with existing BellSouth customers', other telecommunications carriers' customers' or other tower tenants' existing facilities. Each transmitter individually and all transmitters collectively at a given location shall comply with appropriate federal, state, and/or local regulations governing the safe levels of radio frequency radiation. The foregoing obligations shall apply equally to all Other Wireless Carriers.

6.4 At its sole cost and expense, MCI shall maintain MCI's microwave transmission facilities or equipment, including without limitation, all necessary repairs, replacements and restorations. In addition, MCI shall keep its microwave transmission facilities in a good, neat, sanitary and workmanlike condition. If, after ten (10) days of receiving written notice from BellSouth, MCI fails to keep its microwave transmission facilities in such workmanlike condition, BellSouth shall have the right, but not the obligation, to clean up the space on MCI's behalf. In such event, MCI shall be liable to BellSouth for the cost and expense of such work, upon written demand. Furthermore, MCI and its BellSouth Certified Suppliers are required to take all necessary precautions to protect the roof membrane of the BellSouth Central Office during initial construction, future alterations or additions, or maintenance visits to MCI's roof mounted equipment. MCI, at its sole cost and expense, shall make any repairs required due to roof damage caused by MCI or MCI's BellSouth Certified Supplier. All repairs are to be performed by a BellSouth Certified Supplier.

7 Equipment Removal

7.1 If, at any time, BellSouth determines that any of MCI's facilities or equipment or the installation of MCI's facilities or equipment does not meet the requirements outlined in this Exhibit C, MCI will be responsible for the costs associated with the removal of such facilities or equipment or modification of the facilities or equipment or installation thereof to render it compliant. The removal of equipment must be done by a BellSouth Certified Supplier. If MCI fails to correct any non-compliance with these standards or fails to demonstrate that the equipment is compliant within fifteen (15) days' written notice to MCI, BellSouth may have the facilities or equipment removed or the condition corrected at MCI's expense. Removal of microwave transmission facilities for collocation equipment shall be pursuant to the provisions of Section 5.23 of this Attachment 4. If MCI no longer needs, or vacates its microwave transmission facilities, MCI, through a BellSouth Certified Supplier, shall remove its microwave transmission facilities, and restore the roof of the BellSouth Central Office to its original condition excluding normal wear and tear.

8 Collocation Attachment Provisions

8.1 Any provision provided specifically herein shall be in addition to applicable provisions in this Attachment 4.

COLLOCATION - South Carolina

Attachment: 4 Exh B

CATEGORY	RATE ELEMENTS	Interim	Zone	BCS	USOC	RATES($) Rec	Nonrecurring First	Nonrecurring Add'l	Nonrecurring Disconnect First	Nonrecurring Disconnect Add'l	Svc Order Submitted Elec per LSR	Svc Order Submitted Manually per LSR	Incremental Charge - Manual Svc Order vs. Electronic-1st	Incremental Charge - Manual Svc Order vs. Electronic-Add'l	Incremental Charge - Manual Svc Order vs. Electronic-Disc 1st	Incremental Charge - Manual Svc Order vs. Electronic-Disc Add'l
											OSS Rates($)					
							First	Add'l	First	Add'l	SOMEC	SOMAN	SOMAN	SOMAN	SOMAN	SOMAN
PHYSICAL COLLOCATION																
Application																
	Physical Collocation - Initial Application Fee			CLO	PE1BA		1,883.67		0.51							
	Physical Collocation - Subsequent Application Fee			CLO	PE1CA		1,570.10		0.51							
	Physical Collocation - Co-Carrier Cross Connects/Direct Connect, Application Fee, per application	N		CLO	PE1DT		584.42									
	Physical Collocation Administrative Only - Application Fee	N		CLO	PE1BL		743.66									
	Physical Collocation - Application Cost, Simple Augment	N		CLO	PE1KS		594.27		1.21							
	Physical Collocation - Application Cost, Minor Augment	N		CLO	PE1KM		833.26		1.21							
	Physical Collocation - Application Cost, Intermediate Augment	N		CLO	PE1K1		1,058.00		1.21							
	Physical Collocation - Application Cost - Major Augment	N		CLO	PE1KJ		2,409.00		1.21							
Space Preparation																
	Physical Collocation - Floor Space, per sq feet			CLO	PE1PJ	3.95										
	Physical Collocation - Space Enclosure, welded wire, first 50 square feet	N		CLO	PE1BX	197.69										
	Physical Collocation - Space enclosure, welded wire, first 100 square feet			CLO	PE1BW	219.19										
	Physical Collocation - Space enclosure, welded wire, each additional 50 square feet			CLO	PE1CW	21.50										
	Physical Collocation - Space Preparation - C.O. Modification per square ft.			CLO	PE1SK	2.75										
	Physical Collocation - Space Preparation, Common Systems Modifications-Cageless, per square foot			CLO	PE1SL	3.24										
	Physical Collocation - Space Preparation - Common Systems Modifications-Caged, per cage			CLO	PE1SM	110.16										
	Physical Collocation - Space Preparation - Firm Order Processing			CLO	PE1SJ		602.05									
	Physical Collocation - Space Availability Report, per Central Office Requested			CLO	PE1SR		1,077.57									
Power																
	Physical Collocation - Power, -48V DC Power - per Fused Amp Requested			CLO	PE1PL	9.19										
	Physical Collocation - Power, 120V AC Power, Single Phase, per Breaker Amp			CLO	PE1FB	5.67										
	Physical Collocation - Power, 240V AC Power, Single Phase, per Breaker Amp			CLO	PE1FD	11.36										
	Physical Collocation - Power, 120V AC Power, Three Phase, per Breaker Amp			CLO	PE1FE	17.03										
	Physical Collocation - Power, 277V AC Power, Three Phase, per Breaker Amp			CLO	PE1FG	39.33										
	Physical Collocation - Power, DC Power - per Used Amp (List 1 Drain)	N		CLO	PE1FN	12.76										
Cross Connects (Cross Connects, Co-Carrier Cross Connects, and Ports)																
	Physical Collocation - 2-wire cross-connect, loop, provisioning			UEANL,UEQ, UNCNX, UEA, UCL, UAL, UHL, UDN, UNCVX	PE1P2	0.0341	12.32	11.83	6.04	5.45						
	Physical Collocation - 4-wire cross-connect, loop, provisioning			UEA, UHL, UNCVX, UNCDX, UCL, UDL	PE1P4	0.0682	12.42	11.90	6.40	5.74						
	Physical Collocation -DS1 Cross-Connect for Physical Collocation, provisioning			WDS1L, WDS1S, UXTD1, ULDD1, USLEL, UNLD1, U1TD1, UNC1X, UEPSR, UEPSB, UEPSE, UEPSP, USL, UEPEX, UEPDX	PE1P1	1.12	22.08	15.96	6.42	5.80						

COLLOCATION - South Carolina

Attachment: 4 Exh B

CATEGORY	RATE ELEMENTS	Interim	Zone	BCS	USOC	RATES($) Rec	Nonrecurring First	Nonrecurring Add'l	Nonrecurring Disconnect First	Nonrecurring Disconnect Add'l	Svc Order Submitted Elec per LSR	Svc Order Submitted Manually per LSR	Incremental Charge - Manual Svc Order vs. Electronic-1st	Incremental Charge - Manual Svc Order vs. Electronic-Add'l	Incremental Charge - Manual Svc Order vs. Electronic-Disc 1st	Incremental Charge - Manual Svc Order vs. Electronic-Disc Add'l
											OSS Rates($)					
							First	Add'l	First	Add'l	SOMEC	SOMAN	SOMAN	SOMAN	SOMAN	SOMAN
	Physical Collocation - DS3 Cross-Connect, provisioning			UE3, U1TD3, UXTD3, UXTS1, UNC3X, UNCSX, ULDD3, U1TS1, ULDS1, UNLD3, UEPEX, UEPDX, UEPSR, UEPSB, UEPSE, UEPSP	PE1P3	14.21	20.94	15.23	7.39	5.93						
	Physical Collocation - 2-Fiber Cross-Connect			CLO, ULDO3, ULD12, ULD48, U1TO3, U1T12, U1T48, UDLO3, UDL12, UDF	PE1F2	2.82	20.94	15.23	7.40	5.93						
	Physical Collocation - 4-Fiber Cross-Connect			ULDO3, ULD12, ULD48, U1TO3, U1T12, U1T48, UDLO3, UDL12, UDF, UDFCX	PE1F4	5.01	25.61	19.90	9.73	8.26						
	Physical Collocation - Co-Carrier Cross Connects/Direct Connect - Fiber Cable Support Structure, per linear foot, per cable.	N		CLO	PE1ES	0.001										
	Physical Collocation - Co-Carrier Cross Connect/Direct Connect - Copper/Coax Cable Support Structure, per linear foot, per cable.	N		CLO	PE1DS	0.0015										
	Physical Collocation 2-Wire Cross Connect, Port			UEPSR, UEPSP, UEPSE, UEPSB, UEPSX, UEP2C	PE1R2	0.0341	12.32	11.83	6.04	5.45		15.69				
	Physical Collocation 4-Wire Cross Connect, Port			UEPEX, UEPDD	PE1R4	0.0682	12.42	11.90	6.40	5.74		15.69				
Security																
	Physical Collocation - Security Escort for Basic Time - normally scheduled work, per half hour			CLO	PE1BT		16.96	10.75								
	Physical Collocation - Security Escort for Overtime - outside of normally scheduled working hours on a scheduled work day, per half hour			CLO	PE1OT		22.10	13.89								
	Physical Collocation - Security Escort for Premium Time - outside of scheduled work day, per half hour			CLO	PE1PT		27.23	17.02								
	Physical Collocation - Security Access System, Security System, per Central Office			CLO	PE1AX	74.72										
	Physical Collocation -Security Access System - New Card Activation, per Card Activation (First), per State			CLO	PE1A1	0.0601	27.85									
	Physical Collocation-Security Access System-Administrative Change, existing Access Card, per Request, per State, per Card			CLO	PE1AA		7.81									
	Physical Collocation - Security Access System - Replace Lost or Stolen Card, per Card			CLO	PE1AR		22.83									
	Physical Collocation - Security Access - Initial Key, per Key			CLO	PE1AK		13.13									
	Physical Collocation - Security Access - Key, Replace Lost or Stolen Key, per Key			CLO	PE1AL		13.13									
CFA																
	Physical Collocation - CFA Information Resend Request, per premises, per arrangement, per request	N		CLO	PE1C9		77.71									
Cable Records - Note: The rates in the First & Additional columns will actually be billed as "Initial I" and "Subsequent S" respectively																
	Physical Collocation - Cable Records, per request			CLO	PE1CR		I 760.98	S 489.2	133.29							
	Physical Collocation, Cable Records, VG/DS0 Cable, per cable record (maximum 3600 records)			CLO	PE1CD		327.65		189.54							
	Physical Collocation, Cable Records, VG/DS0 Cable, per each 100 pair			CLO	PE1CO		4.82		5.91							
	Physical Collocation, Cable Records, DS1, per T1 TIE			CLO	PE1C1		2.26		2.77							
	Physical Collocation, Cable Records, DS3, per T3 TIE			CLO	PE1C3		7.90		9.68							

COLLOCATION - South Carolina														Attachment: 4 Exh B			
CATEGORY		RATE ELEMENTS	Interim	Zone	BCS	USOC	RATES($)					Svc Order Submitted Elec per LSR	Svc Order Submitted Manually per LSR	Incremental Charge - Manual Svc Order vs. Electronic-1st	Incremental Charge - Manual Svc Order vs. Electronic-Add'l	Incremental Charge - Manual Svc Order vs. Electronic-Disc 1st	Incremental Charge - Manual Svc Order vs. Electronic-Disc Add'l
							Rec	Nonrecurring		Nonrecurring Disconnect		OSS Rates($)					
								First	Add'l	First	Add'l	SOMEC	SOMAN	SOMAN	SOMAN	SOMAN	SOMAN
		Physical Collocation - Cable Records, Fiber Cable, per cable record (maximum 99 records)			CLO	PE1CB		84.68		77.30							
		Physical Collocation, Cable Records,CAT5/RJ45	N		CLO	PE1C5		2.26		2.77							
	Virtual to Physical																
		Physical Collocation - Virtual to Physical Collocation Relocation, per Voice Grade Circuit	N		CLO	PE1BV		33.00									
		Physical Collocation - Virtual to Physical Collocation Relocation, per DSO Circuit	N		CLO	PE1BO		33.00									
		Physical Collocation - Virtual to Physical Collocation Relocation, per DS1 Circuit	N		CLO	PE1B1		52.00									
		Physical Collocation - Virtual to Physical Collocation Relocation, per DS3 Circuit	N		CLO	PE1B3		52.00									
		Physical Collocation - Virtual to Physical Collocation In-Place, Per Voice Grade Circuit	N		CLO	PE1BR		69.11	20.33								
		Physical Collocation Virtual to Physical Collocation In-Place, Per DSO Circuit	N		CLO	PE1BP		69.11	20.33								
		Physical Collocation - Virtual to Physical Collocation In-Place, Per DS1 Circuit	N		CLO	PE1BS		78.48	29.70								
		Physical Collocation - Virtual to Physical Collocation In-Place, per DS3 Circuit	N		CLO	PE1BE		74.67	25.89								
	Entrance Cable																
		Physical Collocation - Fiber Cable Installation, Pricing, non-recurring charge, per Entrance Cable			CLO	PE1BD		794.22		22.54							
		Physical Collocation - Fiber Cable Support Structure, per Entrance Cable			CLO	PE1PM	21.33										
	Pot Bay																
		2-Wire Pot Bay			UEANL, UEA, UDN, UDC, UAL, UHL, UCL, UEQ, CLO, UDL, UNCVX, UNCDX, UNCNX	PE1PE	0.085										
		4-Wire Pot Bay			UEANL, UEA, UDN, UDC, UAL, UHL, UCL, UEQ, CLO, USL, UNCVX, UNCDX	PE1PF	0.1701										
		DS1 Pot Bay			UEANL, UEA, UDN, UDC, UAL, UHL, UCL, UEQ, CLO, WDS1L, WDS1S, USL, U1TD1, UXTD1, UNC1X, ULDD1, USLEL, UNLD1	PE1PG	1.2										
		DS3 Pot Bay			UEANL, UEA, UDN, UDC, UAL, UHL, UCL, UEQ, CLO, UE3, U1TD3, UXTD3, UXTS1, UNC3X, UNCSX, ULDD3, U1TS1, ULDS1, UNLD3, UDL, UDLSX	PE1PH	10.71										

COLLOCATION - South Carolina														Attachment: 4 Exh B			
CATEGORY		RATE ELEMENTS	Interim	Zone	BCS	USOC	RATES($)					Svc Order Submitted Elec per LSR	Svc Order Submitted Manually per LSR	Incremental Charge - Manual Svc Order vs. Electronic-1st	Incremental Charge - Manual Svc Order vs. Electronic-Add'l	Incremental Charge - Manual Svc Order vs. Electronic-Disc 1st	Incremental Charge - Manual Svc Order vs. Electronic-Disc Add'l
							Rec	Nonrecurring		Nonrecurring Disconnect		OSS Rates($)					
								First	Add'l	First	Add'l	SOMEC	SOMAN	SOMAN	SOMAN	SOMAN	SOMAN
		2-Fiber Cross Connect			UEANL, UEA, UDN, UDC, UAL, UHL, UCL, UEQ, CLO, ULD12, ULD48, U1T12, U1T48, UDL12, UDF	PE1B2	36.55										
		4-Fiber Cross Connect			UEANL, UEA, UDN, UDC, UAL, UHL, UCL, UEQ, CLO, ULD12, ULD48, U1T12, U1T48, UDL12, UDF	PE1B4	49.29										
		Note: Existing point(s) of demarcation - MCI provided Pot Bay. BellSouth will grandfather existing point(s) of demarcation established at a MCI provided Pot Bay pursuant to this contract. MCI shall order services using the existing terminations in the MC															
		Note: Existing point(s) of demarcation - BellSouth provided Pot Bay. BellSouth will grandfather existing point(s) of demarcation established at a BellSouth provided Pot Bay. MCI shall order services using the existing terminations in the BellSouth provid															
VIRTUAL COLLOCATION																	
	Application																
		Virtual Collocation - Application Fee			AMTFS	EAF		1,207.95		0.51							
		Virtual Collocation - Co-Carrier Cross Connects/Direct Connect, Application Fee, per application	N		AMTFS	VE1CA		584.42									
		Virtual Collocation Administrative Only - Application Fee	N		AMTFS	VE1AF		743.66									
	Space Preparation																
		Virtual Collocation - Floor Space, per sq. ft.			AMTFS	ESPVX	3.95										
	Power																
		Virtual Collocation - Power, per fused amp			AMTFS	ESPAX	9.19										
	Cross Connects (Cross Connects, Co-Carrier Cross Connects, and Ports)																
		Virtual Collocation - 2-wire cross-connect, loop, provisioning			UEANL, UEA, UDN, UAL, UHL, UCL, UEQ, UNCVX, UNCDX, UNCNX	UEAC2	0.0317	12.32	11.83	6.04	5.45						
		Virtual Collocation - 4-wire cross-connect, loop, provisioning			UEA, UHL, UCL, UDL, UNCVX, UNCDX	UEAC4	0.0634	12.42	11.90	6.40	5.74						
		Virtual collocation - cross-connect per DS1			ULR, UXTD1, UNC1X, ULDD1, U1TD1, USLEL, UNLD1, USL, UEPEX, UEPDX	CNC1X	1.12	22.08	15.96	6.42	5.80						
		Virtual collocation - cross-connect per DS3			USL, UE3, U1TD3, UXTS1, UXTD3, UNC3X, UNCSX, ULDD3, U1TS1, ULDS1, UDLSX, UNLD3	CND3X	14.21	20.94	15.23	7.39	5.93						
		Virtual Collocation - 2-Fiber Cross Connects			UDL12, UDLO3, U1T48, U1T12, U1TO3, ULDO3, ULD12, ULD48, UDF	CNC2F	2.86	20.94	15.23	7.40	5.93						

COLLOCATION - South Carolina														Attachment: 4 Exh B			
CATEGORY		RATE ELEMENTS	Interim	Zone	BCS	USOC	RATES($)					Svc Order Submitted Elec per LSR	Svc Order Submitted Manually per LSR	Incremental Charge - Manual Svc Order vs. Electronic-1st	Incremental Charge - Manual Svc Order vs. Electronic-Add'l	Incremental Charge - Manual Svc Order vs. Electronic-Disc 1st	Incremental Charge - Manual Svc Order vs. Electronic-Disc Add'l
							Rec	Nonrecurring		Nonrecurring Disconnect		OSS Rates($)					
								First	Add'l	First	Add'l	SOMEC	SOMAN	SOMAN	SOMAN	SOMAN	SOMAN
		Virtual Collocation - 4-Fiber Cross Connects			UDL12, UDLO3, U1T48, U1T12, U1TO3, ULDO3, ULD12, ULD48, UDF	CNC4F	5.71	25.61	19.90	9.73	8.26						
		Virtual Collocation - Co-Carrier Cross Connects/Direct Connect - Fiber Cable Support Structure, per linear foot, per cable	N		AMTFS	VE1CB	0.001										
		Virtual Collocation - Co-Carrier Cross Connects/Direct Connect - Copper/Coax Cable Support Structure, per linear foot, per cable	N		AMTFS	VE1CD	0.0015										
		Virtual Collocation 2-Wire Cross Connect, Port			UEPSX, UEPSB, UEPSE, UEPSP, UEPSR, UEP2C	VE1R2	0.0317	12.32	11.83	6.04	5.45						
		Virtual Collocation 4-Wire Cross Connect, Port			UEPDD, UEPEX	VE1R4	0.0634	12.42	11.90	6.40	5.74						
	CFA																
		Virtual Collocation - CFA Information Resend Request, per Premises, per Arrangement, per request	N		AMTFS	VE1QR		77.71									
	Cable Records - Note: The rates in the First & Additional columns will actually be billed as "Initial I" & "Subsequent S" respectively																
		Virtual Collocation Cable Records - per request			AMTFS	VE1BA		I 760.98	S 489.20	133.29							
		Virtual Collocation Cable Records - VG/DS0 Cable, per cable record			AMTFS	VE1BB		327.65		189.54							
		Virtual Collocation Cable Records - VG/DS0 Cable, per each 100 pair			AMTFS	VE1BC		4.82		5.91							
		Virtual Collocation Cable Records - DS1, per T1TIE			AMTFS	VE1BD		2.26		2.77							
		Virtual Collocation Cable Records - DS3, per T3TIE			AMTFS	VE1BE		7.90		9.68							
		Virtual Collocation Cable Records - Fiber Cable, per 99 fiber records			AMTFS	VE1BF		84.68		77.30							
		Virtual Collocation Cable Records - CAT 5/RJ45	N		AMTFS	VE1B5		2.26		2.77							
	Security																
		Virtual collocation - Security escort, basic time, normally scheduled work hours			AMTFS	SPTBX		16.96	10.75								
		Virtual collocation - Security escort, overtime, outside of normally scheduled work hours on a normal working day			AMTFS	SPTOX		22.10	13.89								
		Virtual collocation - Security escort, premium time, outside of a scheduled work day			AMTFS	SPTPX		27.23	17.02								
	Maintenance																
		Virtual collocation - Maintenance in CO - Basic, per half hour			AMTFS	CTRLX		27.99	10.75								
		Virtual collocation - Maintenance in CO - Overtime, per half hour			AMTFS	SPTOM		36.56	13.89								
		Virtual collocation - Maintenance in CO - Premium per half hour			AMTFS	SPTPM		45.12	17.02								
	Entrance Cable																
		Virtual Collocation - Cable Installation Charge, per cable			AMTFS	ESPCX		794.22		22.54							
		Virtual Collocation - Cable Support Structure, per cable			AMTFS	ESPSX	18.66										
COLLOCATION IN THE REMOTE SITE																	
	Physical Remote Site Collocation																
		Physical Collocation in the Remote Site - Application Fee			CLORS	PE1RA		308.38		168.60							
		Cabinet Space in the Remote Site per Bay/ Rack			CLORS	PE1RB	246.44										
		Physical Collocation in the Remote Site - Security Access - Key			CLORS	PE1RD		13.13									
		Physical Collocation in the Remote Site - Space Availability Report per Premises Requested			CLORS	PE1SR		116.13									
		Physical Collocation in the Remote Site - Remote Site CLLI Code Request, per CLLI Code Requested			CLORS	PE1RE		37.64									
		Remote Site DLEC Data (BRSDD), per Compact Disk, per CO	N		CLORS	PE1RR		234.50									
		Physical Collocation - Security Escort for Basic Time - normally scheduled work, per half hour			CLORS	PE1BT		16.96	10.75								

COLLOCATION - South Carolina														Attachment: 4 Exh B			
CATEGORY	RATE ELEMENTS	Interim	Zone	BCS	USOC	RATES($)					Svc Order Submitted Elec per LSR	Svc Order Submitted Manually per LSR	Incremental Charge - Manual Svc Order vs. Electronic-1st	Incremental Charge - Manual Svc Order vs. Electronic-Add'l	Incremental Charge - Manual Svc Order vs. Electronic-Disc 1st	Incremental Charge - Manual Svc Order vs. Electronic-Disc Add'l
						Rec	Nonrecurring		Nonrecurring Disconnect		OSS Rates($)					
							First	Add'l	First	Add'l	SOMEC	SOMAN	SOMAN	SOMAN	SOMAN	SOMAN
	Physical Collocation - Security Escort for Overtime - outside of normally scheduled working hours on a scheduled work day, per half hour			CLORS	PE1OT		22.10	13.89								
	Physical Collocation - Security Escort for Premium Time - outside of scheduled work day, per half hour			CLORS	PE1PT		27.23	17.02								
Adjacent Remote Site Collocation																
	Remote Site-Adjacent Collocation-Application Fee	N		CLORS	PE1RU		755.62	755.62								
	Remote Site-Adjacent Collocation - Real Estate, per square foot	N		CLORS	PE1RT	0.134										
	Remote Site-Adjacent Collocation - AC Power, per breaker amp	N		CLORS	PE1RS	6.27										
Virtual Remote Site Collocation																
	Virtual Collocation in the Remote Site - Application Fee			VE1RS	VE1RB		616.76		337.19							
	Virtual Collocation in the Remote Site - Per Bay/Rack of Space			VE1RS	VE1RC	246.44										
	Virtual Collocation in the Remote Site - Space Availability Report per Premises requested			VE1RS	VE1RR		232.25									
	Virtual Collocation in the Remote Site - Remote Site CLLI Code Request, per CLLI Code Requested			VE1RS	VE1RL		75.27									
ADJACENT COLLOCATION																
	Adjacent Collocation - Space Charge per Sq. Ft.			CLOAC	PE1JA	0.0939										
	Adjacent Collocation - Electrical Facility Charge per Linear Ft.			CLOAC	PE1JC	6.40										
	Adjacent Collocation - 2-Wire Cross-Connects			UEANL,UEQ,UEA,UCL, UAL, UHL, UDN	PE1JE	0.0264	12.32	11.83	6.04	5.45						
	Adjacent Collocation - 4-Wire Cross-Connects			UEA,UHL,UDL,UCL	PE1JF	0.0527	12.42	11.90	6.40	5.74						
	Adjacent Collocation - DS1 Cross-Connects			USL	PE1JG	1.03	22.08	15.96	6.42	5.80						
	Adjacent Collocation - DS3 Cross-Connects			UE3	PE1JH	14.00	20.94	15.23	7.39	5.93						
	Adjacent Collocation - 2-Fiber Cross-Connect			CLOAC	PE1JJ	2.37	20.94	15.23	7.40	5.93						
	Adjacent Collocation - 4-Fiber Cross-Connect			CLOAC	PE1JK	4.53	25.61	19.90	9.73	8.26						
	Adjacent Collocation - Application Fee			CLOAC	PE1JB		1,580.20									
	Adjacent Collocation - 120V, Single Phase Standby Power Rate per AC Breaker Amp			CLOAC	PE1JL	5.67										
	Adjacent Collocation - 240V, Single Phase Standby Power Rate per AC Breaker Amp			CLOAC	PE1JM	11.36										
	Adjacent Collocation - 120V, Three Phase Standby Power Rate per AC Breaker Amp			CLOAC	PE1JN	17.03										
	Adjacent Collocation - 277V, Three Phase Standby Power Rate per AC Breaker Amp			CLOAC	PE1JO	39.33										
MICROWAVE TRANSMISSION FACILITIES (IN CONJUNCTION WITH PHYSICAL COLLOCATION)																
	Microwave Collocation - Site Visit Request to determine Line of Site for a Microwave Transmission Facilities, per Visit, per Central Office	N		CLO	PE1SU		1,029.00		1.31							
	Microwave Collocation - Site Visit Request to perform structural analysis, per Visit, per Central Office	N		CLO	PE1SV		1,029.00		1.31							
	Microwave Collocation - Initial Request for Microwave Transmission Facilities, per Central Office	N		CLO	PE1SW		4,346.00		1.31							
	Microwave Collocation - Subsequent Request for Microwave Transmission Facilities, per Central Office	N		CLO	PE1SX		1,745.00		1.31							
Note: Rates displaying an "I" in the Interim column are interim as a result of a Commission order.																
Note: Rates displaying an "N" in the Interim column are agreed to by the Parties until such time as modified by Commission order and are not subject to true-up.																

ATTACHMENT 5

ACCESS TO NUMBERS & NUMBER PORTABILITY

TABLE OF CONTENTS

1. NON-DISCRIMINATORY ACCESS TO TELEPHONE NUMBERS 3

2. LOCAL SERVICE PROVIDER NUMBER PORTABILITY - PERMANENT SOLUTION (LNP) 3

3. OPERATIONAL SUPPORT SYSTEM (OSS) RATES 4

4. NPA SPLITS..... 4

5. NUMBER ADMINISTRATION..... 4

ACCESS TO NUMBERS AND NUMBER PORTABILITY

1. NON-DISCRIMINATORY ACCESS TO TELEPHONE NUMBERS

1.1 During the term of this Agreement, where MCI is utilizing its own switch, MCI shall contact the North American Numbering Plan Administrator, NeuStar, for the assignment of numbering resources. In order to be assigned a Central Office Code, MCI will be required to complete the Central Office Code (NXX) Assignment Request – Part 1 Form in accordance with Industry Numbering Committee's Central Office Code (NXX) Assignment Guidelines (INC 95-0407-008).

1.2 NXX Migration. Migration of NXXs will be done when the Parties mutually agree to move 10,000 telephone numbers from one (1) Party's switch to the other Party's switch in a particular instance. The Parties shall enter into a separate written agreement that will address processes and procedures for the reassignment of the appropriate NXX as shown in the LERG, to the receiving Party's switch.

1.3 Where BellSouth provides local switching or resold services to MCI, BellSouth will provide MCI with on-line access to intermediate telephone numbers as defined by applicable FCC rules and regulations on a first come first served basis. MCI acknowledges that such access to numbers shall be in accordance with the appropriate FCC rules and regulations. MCI acknowledges that there may be instances where there is a shortage of telephone numbers in a particular rate center; and in such instances, BellSouth may request that MCI return unused intermediate numbers to BellSouth. MCI shall return unused intermediate numbers to BellSouth upon BellSouth's request. BellSouth shall make all such requests on a nondiscriminatory basis.

1.4 For resold Services, telephone numbers may normally be retained by the customer. Neither the Parties nor any customers have a property right to the telephone number, and no right to being served by any particular central office. BellSouth reserves the right to change such numbers, or the central office designation associated with such numbers, or both, on a non-discriminatory basis, whenever BellSouth deems it necessary to do so in the conduct of its business.

1.5 BellSouth will allow MCI to designate up to 100 intermediate telephone numbers per rate center for MCI's sole use. Assignment, reservation and use of telephone numbers shall be governed by applicable FCC rules and regulations. MCI acknowledges that there may be instances where there is a shortage of telephone numbers in a particular rate center and BellSouth has the right to limit access to blocks of intermediate telephone numbers. These instances include: 1) where jeopardy status has been declared by the North American Numbering Plan Administrator (NANPA) for a particular Numbering Plan Area (NPA); or 2) where BellSouth has less than a six month supply of numbering resources in a rate center.

2. LOCAL SERVICE PROVIDER NUMBER PORTABILITY - PERMANENT SOLUTION (LNP)

2.1 The Parties will offer Number Portability in accordance with rules, regulations and guidelines adopted by the Commission, the FCC and industry fora.

2.1.1 The Parties shall provide, in a competitively neutral fashion, INP and LNP as set forth herein and in accordance with the applicable rules, regulations and orders of the FCC and this Commission.

2.1.2 BellSouth agrees that it shall provide to MCI, in a competitively neutral fashion, dialing parity for local exchange service and interexchange service pursuant to the applicable rules, regulations and orders of the state regulatory body and the FCC in effect.

2.2 Customer Line Charge. Where MCI subscribes to BellSouth's local switching, BellSouth shall bill and MCI shall pay the customer line charge associated with implementing LNP as set forth in BellSouth's FCC Tariff No. 1. This charge is not subject to the resale discount set forth in Attachment 1 of this Agreement.

2.3 To limit service outage, BellSouth and MCI will adhere to the process flows and cutover guidelines for porting numbers as outlined in the LNP Reference Guide, as amended from time to time. The LNP Reference Guide and the Local Ordering Handbook (LOH), incorporated herein by reference, are accessible via the Internet at the following site: http://www.interconnection.bellsouth.com. All intervals referenced in the LOH shall apply to both BellSouth and MCI.

2.4 The Parties will set Location Routing Number (LRN) unconditional or 10-digit triggers where applicable. Where triggers are set, the porting Party will remove the ported number at the same time the trigger is removed.

2.5 A trigger order is a service order issued in advance of the porting of a number. A trigger order 1) initiates call queries to the AIN SS7 network in advance of the number being ported; and 2) provides for the new service provider to be in control of when a number ports.

2.6 Where triggers are not set, the Parties shall coordinate the porting of the number between service providers so as to minimize service interruptions to the customer.

2.7 BellSouth and MCI will work cooperatively to implement changes to LNP process flows ordered by the FCC or as recommended by standard industry forums addressing LNP.

3. OPERATIONAL SUPPORT SYSTEM (OSS) RATES

3.1 The terms, conditions and rates for OSS are as set forth in Attachment 2.

4. NPA SPLITS

4.1 NPA Splits. BellSouth shall provide on a nondiscriminatory basis, advance information of the details and requirements for planning and implementation of NPA splits or other network changes impacting MCI or its Customers.

5. NUMBER ADMINISTRATION

5.1 BellSouth shall provide testing and loading of MCI's NXXs in BellSouth's switch network prior to the date of activation specified in the local Exchange Routing Guide ("LERG"). Turn-up testing of MCI's NXXs will be performed in all affected BellSouth end offices and tandem offices

5.2 Where MCI has obtained its own NXX, but has purchased BellSouth services for resale or has purchased switching from BellSouth, BellSouth agrees to administer the MCI NXX in accordance with the LERG. Where MCI provides its own switching and obtains its own NXX code, BellSouth

agrees to install the routing in its switches according to the local calling area defined by the Commission.

5.3 BellSouth shall accept MCI orders with assigned vanity numbers and blocks of numbers assigned for use with Complex Services.

ATTACHMENT 6

PRE-ORDERING, ORDERING, PROVISIONING, MAINTENANCE AND REPAIR

TABLE OF CONTENTS

Section 1. Overall Business Requirements
- 1.1 Introduction
- 1.2 ATIS Standards and Guidelines
- 1.3 Joint Implementation Agreements
- 1.4 Interface Implementation Specifications and Information Exchanges
- 1.6 Change Management and Control
- 1.7 General Procedures
- 1.8 Performance Standards
- 1.9 Provision of Specific Services

Section 2. Pre-order Requirements
- 2.1 Provision of Pre-Order OSS
- 2.2 Business Requirements for Pre-Order Functions
- 2.4 Pre-order Interface Performance and Management
- 2.5 Database Downloads

Section 3. Ordering and Provisioning Requirements
- 3.1 Provision of Ordering and Provisioning OSS
- 3.2 General Business Requirements and Functions
- 3.4 Ordering and Provisioning Interface Performance and Management
- 3.5 Cooperative Testing

Section 4. Connectivity Billing and Recording
- 4.1 Provision of Connectivity Billing and Recording OSS
- 4.2 General Requirements and Functions
- 4.3 Billing Tapes
- 4.5 Connectivity Billing and Recording Interface Performance and Management

Section 5. Customer Usage Data
- 5.1 Provision of Subscriber Usage Data
- 5.2 General Requirements and Functions

Section 6. Maintenance and Repair
- 6.1 Provision of Maintenance and Repair OSS
- 6.2 General Business Requirements and Functions

Section 7. White Pages Listing
- 7.1 Listings
- 7.2 Rates
- 7.3 Unlisted/Non-Published Subscribers
- 7.4 Inclusion of MCI customers in Directory Assistance Database
- 7.5 Listing Information Confidentiality
- 7.6 Additional and Designer Listings
- 7.7 Directories

Section 8. Directory Assistance Data

PRE-ORDERING, ORDERING, PROVISIONING, MAINTENANCE AND REPAIR

1 OVERALL BUSINESS REQUIREMENTS

1.1 Introduction. This Attachment 6 sets forth the minimum business process requirements, business rules, usage rules, data models, data exchange methods, and other specifications necessary to permit MCI access to the functions of BellSouth's operations support systems (i.e., pre-ordering, ordering and provisioning, billing functions, and maintenance and repair) (Operational Support Systems (OSS) Functions).

1.1.1 BellSouth shall provide MCI nondiscriminatory access to its OSS and the necessary information contained therein in order that MCI can perform the functions of pre-ordering, ordering, provisioning, maintenance and repair, and billing. BellSouth shall provide nondiscriminatory access to the OSS through manual and/or electronic interfaces as described in this Attachment. It is the sole responsibility of MCI to obtain the technical capability to access and utilize BellSouth's OSS interfaces. Specifications for MCI's access and use of BellSouth's electronic interfaces are set forth at BellSouth's interconnection website and are incorporated herein by reference.

1.2 Standards and Guidelines

1.2.1 For purposes of this Agreement, the Change Control Process (CCP) shall mean the collaborative forum established by BellSouth to allow BellSouth and the CLEC community to discuss, provide input regarding and vote on developments of and modifications to the manual and electronic, OSS processes and interfaces. Subject to the CCP, BellSouth shall base its development of OSS interfaces on applicable industry standards and guidelines.

1.2.2 BellSouth and MCI shall comply with the written change management and control procedures agreed to in the CCP. Changes to the change management and control procedures proposed by either Party, including guidelines for change management and control procedures developed by the industry, shall be considered by the CCP. These procedures will govern the steps necessary to change, alter or modify the OSS Functions or the Application-to-Application interface(s) designed, developed, tested, and deployed under this Attachment 6. The provisions of the change management and control procedures and processes are essential to this Agreement.

1.2.2.1 BellSouth OSS interfaces shall provide MCI with the same process and system capabilities for residential and business services. BellSouth shall not require MCI to develop distinct processes or OSS interfaces by class of service.

1.2.3 MCI agrees to comply with the provisions of the Operations Support Systems (OSS) Interconnection Volume Guidelines as set forth at BellSouth's Interconnection Web site, and incorporated herein by reference as amended from time to time.

1.3 Customer Information

1.3.1 Neither Party will require customer confirmation prior to establishing service for the other Party's customers, except in the event that the customer (where permitted by law) has a local

preferred carrier freeze on its account. If the customer has a local preferred carrier freeze, the Parties will adhere to the procedures prescribed in the FCC's 47 C.F.R. 64.1190 freeze.

1.3.2 The Parties agree not to view, copy, or otherwise obtain access to the customer service record ("CSR") information of any customer without that customer's permission. The Parties will obtain access to CSR information only in strict compliance with applicable laws, rules, or regulations of the state in which the service is provided by obtaining documented verbal or written approval (Letter of Authorization (LOA)) from the customer to view the CSR. If either Party is suspicious of the other Party's access of CSR information, the suspicious Party may request that the other Party provide, within seven (7) calendar days, appropriate documentation establishing or evidencing that the accessing Party had the customer's approval to view the CSR (e.g., screenshot, LOA). If the suspicious Party does not believe the documentation is adequate, or if the accessing Party is unable to provide documentation within seven (7) calendar days, the suspicious Party may give the accessing Party written notice of an allegation that the accessing Party has accessed the CSR information in violation of this Section. If the accessing Party disputes the allegation within ten (10) calendar days of receiving such written notice, the Parties shall proceed according to the dispute resolution process in the General Terms and Conditions. During the pendency of such dispute resolution, the Party making the allegation shall not take any action to suspend, disconnect, or terminate the accessing Party's ability to access additional CSR information. If the accessing Party does not dispute the allegation within ten (10) calendar days of receiving the written notice, the alleging Party may discontinue the accessing Party's access to further CSR information, refuse additional applications for service from the accessing Party, decline to complete any pending service orders for the accessing Party, and/or otherwise deny the accessing Party's access to the alleging Party's pre-ordering and ordering systems. If however, the accessing Party disputes the allegation after such discontinuance, the discontinuance shall be removed and further access to CSR information shall be restored pending the resolution of the dispute pursuant to the dispute resolution provisions of the General Terms and Conditions. All such information obtained through the process set forth in this Section shall be deemed Information covered by the Proprietary and Confidential Information section in the General Terms and Conditions of this Agreement.

1.3.3 If, based on a customer complaint, either Party (the Complaining Party) determines that the other Party (the Changing Party) has submitted an unauthorized change in local service; the Parties will reestablish service for the customer with the appropriate local service provider at the expense of the Changing Party. The Complaining Party will notify the Changing Party of the customer complaint. If the Changing Party is unable to provide proof of authorization, the Complaining Party may assess the Changing Party, any applicable unauthorized change charge approved by the Commission. No charges will be assessed if the Changing Party provides proof that the change was authorized.

1.3.3.1 BellSouth shall not use MCI customer records for its own marketing purposes, nor make such records available to other CLECs except in compliance with Applicable law. MCI shall provide to BST access to customer record information, including circuit numbers associated with each telephone number where applicable. MCI shall provide such information within four (4) hours after request via electronic access where available. If electronic access is not available, MCI shall provide to BST paper copies of customer record information, including circuit numbers associated with each telephone number where applicable within two (2) business days.

1.3.3.2 Each Party shall refer all questions regarding the other Party's services or products directly to the other Party at a telephone number specified by the other Party. Each Party shall ensure that all their representatives who may receive inquiries, relating to the other Party's services, from the

other Party's subscribers, or otherwise have opportunity for contact, relating to the other Party's services: (i) provide such numbers, if available to the personnel receiving the call, to callers who inquire about the other Party's services or products; (ii) do not in any way disparage or discriminate against the other Party, or its products or services; and (iii) do not provide information about their products or services during that same inquiry or caller contact, unless that information specifically is requested by the caller. Subject to the limitations of this Section, both Parties maintain the right to serve directly any customer within the service area of the other Party. Both Parties may directly market their own telecommunications products and services and in doing so may establish independent relationships with customers of the other Party.

1.3.3.3 In general, BellSouth will not become involved in disputes between MCI and MCI's customers. If a dispute does arise that cannot be settled without the involvement of BellSouth, MCI shall contact the designated BellSouth Service Center for assistance in the dispute resolution. BellSouth will make commercially reasonable efforts to assist MCI to resolve the matter in as timely a manner as possible. BellSouth's involvement will be limited to interfacing with MCI's employees and agents with expressed authority.

1.3.3.4 Where BellSouth provides switching pursuant to this Agreement, BellSouth will process calls made to its Annoyance Call Center and will advise MCI when it is determined that annoyance calls are originated from one (1) of their customer's locations. It is the responsibility of MCI to take the corrective action necessary up to and including the disconnection of service to its customers who make annoying calls. BellSouth shall provide the same level of Annoyance Call Center service to MCI's customers as BellSouth provides to its own customers.

1.4 Customer Contact. BellSouth shall recognize MCI as the Customer of record for all Services and Interconnection ordered by MCI, and shall send all notices, invoices, and information that pertain to these ordered services directly to MCI. MCI will provide BellSouth with addresses to which BellSouth must send these notices, invoices, and information.

1.4.1 BellSouth will ensure its employees are trained on the provisions of this Agreement, Applicable Law, and any other matters mutually agreed to by the Parties.

1.5 Account Management. BellSouth will identify to MCI one (1) or more BellSouth representatives that will serve as MCI's account management team for purposes of administering this Agreement and ensuring that BellSouth's obligations under this Agreement are carried out efficiently and in coordination with MCI. The account management team's primary function is to interact with the various BellSouth operating groups on MCI's behalf. The account management team shall be accessible to MCI personnel to provide timely and decisive responses to MCI's inquiries, escalations, and requests.

1.5.1 Expedite and Escalation Procedures. BellSouth and MCI shall maintain mutually acceptable escalation and expedite procedures that may be invoked to facilitate rapid and timely resolution of issues. These procedures shall include, at a minimum, contact names and telephone numbers.

1.5.2 At MCI's request, BellSouth's account management personnel shall meet with MCI to discuss ways to improve the account management team and its functions.

1.5.3 BellSouth shall make available to MCI via an online viewer (via the Internet) any and all non-proprietary materials or information to which the account management team directs MCI.

1.5.4 Training Support

1.5.4.1 For each OSS system training class offered by BellSouth, BellSouth shall make available one (1) free seat each year to MCI. Job aids for updates to such OSS training information are available to MCI on BellSouth's web site.

1.5.5 Customer Payment History. BellSouth will participate in NCTDE (National Consumer Telecommunications Data Exchange) and commit to providing NCTDE with two (2) years of historical information on UCAs for their local accounts and also report current UCA information in accordance with NCTDE required timelines for the purpose of providing MCI with third party access to Customer Payment History. BellSouth will make the following Customer payment history information available in accordance with the NCTDE format to the extent the same is available for BellSouth's own use for each Person or entity that applies for (i) local service; or (ii) intraLATA toll Telecommunications Service(s). As of the effective date of this Agreement, BellSouth provides information to NCTDE regarding payment history of BellSouth residential customers. During the term of this Agreement, BellSouth will continue to provide such information to NCTDE provided that: (1) NCTDE continues to accept information from BellSouth through the third party administrator BellSouth currently uses in the same format and under the same terms and conditions as such information is currently provided; (2) the third party administrator that BellSouth currently uses to provide such information to NCTDE continues to administer the data transmission function on BellSouth's behalf on the same terms and conditions as exist currently; (3) NCTDE does not impose any charges on BellSouth for BellSouth's provision of such information; (4) BellSouth is not required to join NCTDE as a participant or recipient of data from NCTDE in order to continue providing information as described herein; and (5) there is no change in law or enforcement of any existing law that, in BellSouth's legal judgment, imposes an unreasonable risk on BellSouth in connection with its provision of the information to NCTDE. The Parties agree that in the event BellSouth ceases providing such information to NCTDE, the Parties will work cooperatively to develop a mutually acceptable alternative arrangement for BellSouth to provide the information to MCI, either directly or through a third party. In determining whether such alternative arrangement will be acceptable to either Party, the Parties may consider, among other things, cost and administrative burden.

1.5.6 BellSouth shall not refuse service to MCI for any potential MCI subscriber on the basis of that subscriber's past payment history with BellSouth.

1.6 Provision of Specific Services

1.6.1 Telephone Line Number Calling Cards. When a customer changes local service from BellSouth to MCI, BellSouth will terminate its existing telephone line number-based calling cards and remove any BellSouth-assigned Telephone Line Calling Card Number (including area code) (TLN) from BellSouth's LIDB within three (3) business days from completion of the service order. MCI may issue a new telephone calling card to such customer, utilizing the same TLN, and MCI shall have the right to enter such TLN in LIDB for calling card validation purposes. TLN for MCI's Resale customers can be entered in BellSouth's LIDB via the service order process. TLN for all of MCI's UNE customers can be entered in BellSouth's LIDB via other arrangements, i.e. FAX, E-mail, Internet, made through your BellSouth Account Manager. BellSouth will direct-bill each customer on the customer's final bill.

1.7 Use of Facilities. When a customer of MCI elects to discontinue service and transfer service to another local exchange carrier, including BellSouth, BellSouth shall have the right to reuse the facilities provided to MCI by BellSouth. In addition, where BellSouth provides local switching pursuant to this Agreement, BellSouth may disconnect and reuse facilities when the facility is in

a denied state and BellSouth has received an order to establish new service or transfer service from a customer of MCI at the same address served by the denied facility. BellSouth will notify MCI that such a request has been processed after the disconnect order has been completed. Such notification will be provided via MCI's line loss notification report which can be found on the PMAP website at http://pmap.bellsouth.com/default.aspx, which is updated on a daily basis except for Sundays.

2 PRE-ORDER REQUIREMENTS

2.1 Provision of Pre-Order OSS

2.1.1 Subject to Applicable Law, either Party shall provide the other Party with access to customer profile information and all other pre-order information without requiring the other Party to produce a signed or written letter of agency (LOA). Instead, either Party shall accept the other Party's blanket representation that a customer has authorized the other Party to obtain this information or data, including any Customer Proprietary Network Information (CPNI) contained in the information or data.

2.2 Business Requirements for Pre-Ordering Functions

2.2.1 Loop Makeup (LMU)

2.2.1.1 Description of Service

2.2.1.1.1 BellSouth shall make available to MCI, Loop Makeup (LMU) information for BellSouth network facilities, for telephone numbers, circuit identifications, or service addresses specified by MCI, except for facilities designated for use by other carriers, so that MCI can make an independent judgment about the availability and capability of loop facilities to support MCI provided services. This Section addresses LMU as a preordering transaction, distinct from MCI ordering any other service(s). Loop Makeup Service Inquiries (LMUSI) for preordering loop makeup are likewise unique from other preordering functions with associated service inquiries (SI) as described in this Agreement.

2.2.1.1.2 BellSouth will provide MCI LMU information consisting of the composition of the loop material (copper/fiber); the existence, location and type of equipment on the loop, including but not limited to digital loop carrier or other remote concentration devices, feeder/distribution interfaces, bridged taps, load coils, pair-gain devices; the loop length; the wire gauge and electrical parameters.

2.2.1.1.3 BellSouth's LMU information is provided to MCI as it exists either in BellSouth's databases or in its hard copy facility records. BellSouth does not guarantee accuracy or reliability of the LMU information provided, but BellSouth shall provide the same information to MCI that it provides to itself.

2.2.1.1.4 MCI may choose to use equipment that it deems will enable it to provide a certain type and level of service over a particular BellSouth loop. The determination shall be made solely by MCI and BellSouth shall not be liable in any way for the performance of the advanced data services provisioned over said loop. For facilities reserved using a LMUSI, when MCI orders a loop, the specific loop type (ADSL, HDSL, or otherwise) ordered on the LSR must match the LMU of the loop reserved taking into consideration any requisite line conditioning. The LMU data is provided for informational purposes only and does not guarantee MCI's ability to provide

advanced data services over the ordered loop type. Further, if MCI orders loops that are not intended to support advanced services (such as UVL-SL1, UVL-SL2, or ISDN compatible loops) and that are not inventoried as advanced services loops, the LMU information for such loops is subject to change at any time due to modifications and/or upgrades to BellSouth's network. MCI is fully responsible for any of its service configurations that may differ from BellSouth's technical standard for the loop type ordered.

2.2.2 Submitting Loop Makeup Service Inquiries

2.2.2.1 MCI may obtain LMU information by submitting a LMUSI mechanically or manually. Mechanized LMUSIs should be submitted through BellSouth's Operational Support Systems interfaces. After obtaining the loop from the mechanized LMUSI process, if MCI needs further loop information in order to determine loop service capability, MCI may initiate a separate Manual LMUSI for a separate nonrecurring charge as set forth in Attachment 1 of this Agreement.

2.2.2.2 Manual LMUSIs shall be submitted by electronic-mail to BellSouth’s Complex Resale Support Group (CRSG)/Account Team utilizing the Preordering Loop Makeup Service Inquiry form. The service interval for the return of a Loop Makeup Manual Service Inquiry is three (3) business days. Manual LMUSIs are not subject to expedite requests. This service interval is distinct from the interval applied to the subsequent service order.

2.2.3 Loop Reservations

2.2.3.1 MCI may reserve facilities for up to four (4) calendar days for each facility requested on a LMUSI from the time the LMU information is returned to MCI. During and prior to MCI placing an LSR, the reserved facilities are rendered unavailable to other customers, including BellSouth. If MCI does not submit an LSR for a UNE service on a reserved facility within the four (4) day reservation timeframe, the reservation of that spare facility will become invalid and the facility will be released. For a Mechanized LMUSI, MCI may reserve up to ten (10) loop facilities. For a Manual LMUSI, MCI may reserve up to three (3) loop facilities.

2.2.3.2 Charges for preordering LMUSI are separate from any charges associated with ordering other services from BellSouth.

2.2.4 Ordering of Other UNE Services

2.2.4.1 All LSRs issued for reserved facilities shall reference the facility reservation number as provided by BellSouth. MCI will not be billed any additional LMU charges for the loop ordered on such LSR. If however, MCI does not reserve facilities upon an initial LMUSI, MCI's placement of an order for an advanced data service type facility shall be deemed placed for such a facility rate element that "includes manual service inquiry and reservation" per Attachment 1 of this Agreement.

2.2.4.2 Where MCI has reserved multiple loop facilities on a single reservation; MCI may not specify which facility shall be provisioned when submitting the LSR. For those occasions, BellSouth will assign to MCI, subject to availability, a facility that meets the BellSouth technical standards of the BellSouth type loop as ordered by MCI.

2.3 Pre-Order Interface Performance and Management. BellSouth will provide a Specialized Point of Contact (SPOC) for its OSS that will provide the following support to MCI for the various BellSouth OSS interfaces, which is BellSouth's Electronic Commerce (EC) Support Center. The EC Support Center will provide technical assistance to MCI dealing with all associated production systems, the interface itself, and its operability. This center will also provide escalation support twenty-four (24) hours seven (7) days a week.

2.4 Database Downloads

2.4.1 Product and Service Information Management System (PSIMS). BellSouth shall provide MCI, on a monthly basis, a flat file extraction of PSIMS, which includes PIC availability as well as a list of the features and functions available on an end office-by-end office basis, via CONNECT:Direct Service. There is no charge for obtaining the PSIMS file in this manner.

3 ORDERING AND PROVISIONING REQUIREMENTS

3.1 Provision of Ordering and Provisioning OSS.

3.1.1 BellSouth shall provide MCI the information and data set forth in this Section as specified by CCP.

3.1.2 BellSouth shall bill MCI OSS rates pursuant to the rates, terms and conditions for OSS set forth in Exhibit A of Attachment 2 to this Agreement. MCI shall bill BellSouth a single manual OSS charge for an LSR associated with the "Port Back" of a telephone number to BellSouth as set forth in Exhibit A to Attachment 2 of this Agreement until such time as electronic ordering is provided by MCI to BellSouth at which time the applicable electronic OSS charge would apply. Any other OSS functions provided by MCI to BellSouth will be provided at similar rates, terms and conditions as those that apply to BellSouth when it provides OSS functions to MCI and negotiated through an amendment to this Agreement by the Parties. If the Parties are unable to negotiate an amendment, either Party may utilize the dispute resolution provisions of this Agreement.

3.1.3 If either BellSouth's or MCI's existing electronic ordering and provisioning interfaces are unavailable, BellSouth shall employ a facsimile machine to facilitate the submission or process of any new or existing service requests. BellSouth shall provide access to these facsimile machines for order receipt when notified by MCI of any Application-to-Application interface unavailability**.** No manual OSS charges shall apply to Local Service Requests submitted when BellSouth's existing electronic interfaces utilized by MCI are unavailable for reasons other than scheduled maintenance.

3.2 General Business Requirements and Functions

3.2.1 Local Carrier Service Center (LCSC)

3.2.1.1 The LCSC will serve as MCI's single point of contact (SPOC) for processing partially mechanized and manual LSRs providing order status, delivering authorized customer record information and performing billing inquiries and payment arrangements. The LCSC shall process all pre-ordering, ordering, and order status functions, including but not limited to, answering questions, resolving problems, and handling expedites and escalations, for Services requested by MCI that require manual intervention.

3.2.1.2 The LCSC toll-free nationwide telephone number and toll-free fax numbers are provided on BellSouth's website at http://interconnection.bellsouth.com/center/html/lcsc.html. This site also provides the escalation telephone numbers for each of the LCSC centers. LCSC hours of availability are provided for each of the centers at the above website.

3.2.2 Regular working hours/overtime. For purposes of this Agreement, BellSouth's regular working hours for provisioning are defined as follows:

3.2.2.1 Monday - Friday - 8:00AM - 5:00PM location time (excluding holidays) Resale/UNE non-coordinated, coordinated orders and order coordinated - Time Specific)

3.2.2.2 Saturday- 8:00 AM - 5:00 PM location time (excluding holidays) (Resale/UNE non-coordinated orders)

3.2.2.3 Times are either Eastern or Central time based on the location of the work being performed. All other MCI requests for provisioning and installation services are considered outside of the normal hours of operation and will be performed subject to the application of overtime billing charges.

3.2.2.4 Ordering and provisioning measurements will be as outlined in Attachment 9 of this Agreement.

3.2.3 IntraLATA Carrier Selection

3.2.3.1 BellSouth shall provide to MCI the capability to order local service, intraLATA, and interLATA services by entering MCI Customer's choice of carrier on a single order. BellSouth shall provide MCI with the capability to order separate interLATA and intraLATA carriers on a line or trunk basis.

3.2.3.2 In all cases, BellSouth will route toll calls to the appropriate carrier as designated by MCI. BellSouth shall not be the default toll carrier in any circumstances.

3.2.4 <u>Customer Account Record Exchange (CARE) Notification to Telecommunications Carrier in Resale Arrangements</u>

3.2.4.1 BellSouth CARE shall notify MCI on the Web-based PIC, assessed via Common Access Front End (CAFÉ), whenever an MCI Customer who is provided local service through Local Resale changes their PIC status.

3.2.4.2 BellSouth shall support and implement new Transaction Code Status Indicators (TCSIs) in support of Local Resale. BellSouth and MCI will work cooperatively to define CARE transactions supporting local resale. In support of resale, BellSouth shall pass to MCI all TCSIs implemented between BellSouth and an interexchange carrier.

3.2.4.3 MCI may initiate a CARE block by submitting an LSR to deny PIC change activity on MCI customers. BellSouth will then reject any PIC changes using a code of 3148 for resold lines.

3.2.4.4 BellSouth CARE transactions supporting the LSR process for resale and account maintenance are as follows:

3.2.4.4.1 40XX = Local Resale Subscription Order Install by Switch Provider (SWP)

3.2.4.4.2 42XX = Local Resale Subscription Order Disconnected by Switch Provider (SWP)

3.2.4.4.3 43XX = Local Resale Customer Information Changes by BellSouth as Switch Provider (SWP)

3.2.5 Service Migrations and New Subscriber Additions

3.2.5.1 When local switching is provided by BellSouth pursuant to this Agreement, and unless otherwise requested by MCI, BellSouth will migrate a customer from BellSouth's services to MCI's service without loss of feature availability and functionality. To the extent the customer's voice mail service is available for resale to MCI pursuant to Attachment 1 of this Agreement and MCI chooses to purchase such voice mail service from BellSouth, BellSouth will migrate a customer from BellSouth's services to MCI's services without loss of voice mail (including the current mail box and its characteristics, if requested by MCI) and associated ancillary services, including, but not limited to, Directory Listings, LIDB, Operator Services, and 911/E911. BellSouth shall not intentionally or unnecessarily interrupt feature capability.

3.2.5.2 BellSouth shall recognize MCI as an agent for the Customer in coordinating the disconnection of services provided by BellSouth. BellSouth will disconnect the BellSouth-provided services based on the information MCI places on the LSR. In the case of a coordinated conversion, BellSouth will work with MCI to coordinate the disconnection and connection of the customer's service.

3.2.5.3 For coordinated loop conversions, BellSouth shall verbally coordinate the disconnect with MCI and perform switch translations so as to limit customer service outage. BellSouth and MCI will mutually agree upon a cutover time twenty-four (24) to forty-eight (48) hours prior to the actual conversion. MCI may designate the conversion time when the conversion involves a loop by requesting "order coordination -- time specific" conversion at rates set forth in Attachment 2 of this Agreement. BellSouth will make every effort to accommodate MCI's specific conversion time request. However, BellSouth reserves the right to negotiate with MC a conversion time based on load and appointment control when necessary. MCI may specify a time between 9:00 a.m. and 4:00 p.m. (location time) Monday through Friday (excluding holidays). If MCI specifies a time outside this window, or selects a time or quantity of Loops that requires BellSouth technicians to work outside normal work hours, overtime charges will apply in addition to the OC and OC-TS charges. Overtime charges will be applied based on the amount of overtime worked and in accordance with the rates established in the Access Services Tariff, Section E13.2, for each state. Both parties will use best efforts to ensure mutually agreed to conversion times, as identified in this paragraph, will commence within thirty (30) minutes of the agreed time. For subscriber conversions requiring Coordinated Cut-Over activities, on a per order basis, BellSouth and MCI will agree on a scheduled conversion time. BellSouth shall notify MCI when conversion is complete. BellSouth shall comply with the performance measurements relating to customer service interruptions as set forth in Attachment 9. For coordinated conversions of other Services, BellSouth and MCI shall work cooperatively to establish conversion procedures and rates

	Order Coordination (OC)	**Order Coordination – Time Specific (OC-TS)**	**Test Points**	**DLR**	**Charge for Dispatch and Testing if No Trouble Found**
SL-1	Chargeable	Chargeable	Not available	Chargeable Option –	Charged for Dispatch inside and outside

(Non-Designed)	Option	Option		ordered as Engineering Information Document	Central Office
UCL-ND **(Non-Designed)**	Chargeable Option	Not Available	Not Available	Chargeable Option – ordered as Engineering Information Document	Charged for Dispatch inside and outside Central Office
Unbundled Voice Loops - SL-2 (including 2- and 4-wire UVL) (Designed)	Included	Chargeable Option	Included	Included	Charged for Dispatch outside Central Office
Unbundled Digital Loop (Designed)	Included	Chargeable Option (except on Universal Digital Channel)	Included (where appropriate)	Included	Charged for Dispatch outside Central Office
Unbundled Copper Loop (Designed)	Chargeable in accordance with Section 2	Not available	Included	Included	Charged for Dispatch outside Central Office
For UVL-SL1 and UCLs, MCI must order and will be billed for both OC and OC-TS if requesting OC-TS.					

3.2.6 Intercept Treatment and Transfer of Service Announcements. At MCI's request, BellSouth shall provide unbranded or MCI-branded intercept treatment and transfer of service announcements to MCI's Customers. BellSouth shall provide an intercept referral message for the same period of time that BellSouth currently provides such a message for its own customers.

3.2.7 Desired Due Date (DDD). BellSouth shall complete all service request activities for related orders on a single, common due date, provided the same common date is specified on each LSR for the related orders. This single, common date will be reflected on the FOC of each related order.

3.2.7.1 MCI will specify on each order the Desired Due Date (DDD). BellSouth shall assign a due date which shall be the later of the date for the interval specified in Section 8 of the Local Ordering Handbook (LOH), located at http://interconnection.bellsouth.com/guides/html/leo.html, or MCI's

DDD. Bellsouth will meet the due date that is on the order and that due date must match the interval. BellSouth shall not complete the order prior to the DDD, unless authorized by MCI or later than the date on the FOC without providing a jeopardy notification.

3.2.7.2 Expedites. Requests for due dates that are earlier than the BellSouth offered date will be treated as an expedite request. In order to request an expedited due date, MCI shall use the expedite request field on the order. BellSouth shall notify MCI of the status of the order and the due date which shall be (1) for a non-designed order, (a) the expedite date, (b) the earliest date it can be worked after the expedite date or (c) the standard date, or (2) for an UNE order, (a) the expedite date or (b) the standard date as the DD, with the return of the FOC. BellSouth shall bill expedite charges for expedited due dates and will advise MCI of any charges at the time the offered date is provided. The rates for expedite charges are set forth in Attachment 2 of this Agreement, and no expedite charges shall apply for a request not completed prior to the standard date.

3.2.8 Customer Premises Inspections and Installations

3.2.8.1 Where access to the Customer's premises is required, BellSouth shall provide MCI with the ability to schedule Customer premises installations in accordance with the LOH.

3.2.8.2 BellSouth will provide installation of inside wiring, upon MCI's request, on the rates, terms and conditions offered to BellSouth retail customers, as set forth in BellSouth's tariffs.

3.2.9 FOC

3.2.9.1 BellSouth shall provide to MCI a FOC for each MCI LSR via the same interface used to submit the LSR. BellSouth shall send only one (1) FOC per LSR. The information provided on the FOC will be as described in the Product Information Packages and BellSouth LOH which can be found at BellSouth's Internet site: http://interconnection.bellsouth.com/guides/html/leo.html.

3.2.9.2 After MCI's receipt from BellSouth of a valid LSR, MCI will provide BellSouth with FOCs for facilities-based migrations in 2 business days in a format in accordance with the rules developed by the Ordering and Billing Forum (OBF). The FOCs will be provided via the same interface as that through which the LSR was placed.

3.2.10 After MCI's receipt of a BellSouth FOC, any change in the Due Date by BellSouth not initiated by an LSR will be considered a Jeopardy.

3.2.11 Order Rejections

3.2.11.1 BellSouth shall reject and return to MCI any service request that BellSouth can not provision due to technical reasons or due to missing, inaccurate or illegible information. When an order is rejected, BellSouth shall, in its reject notification, specifically describe, using specified error codes, the reasons for which the order was rejected. Although BellSouth exercises its best efforts to identify all errors before rejecting the LSR to MCI, this is not always possible. The type and severity of the error may prevent the LSR from being processed further once an error is discovered by BellSouth's system. BellSouth will identify errors in accordance with BellSouth's LSR error messages documentation, which contains all error codes applicable to any LSR and a description of the errors such codes identify. BellSouth will make available such documentation on BellSouth's interconnection web site. BellSouth will work cooperatively with MCI as reasonably necessary to assist MCI in identifying and understanding LSR errors and associated error codes.

3.2.11.1.1 After BellSouth's submission of an LSR that is incomplete or incorrectly formatted, MCI will provide BellSouth with a Reject Response for facilities-based migrations in 2 business days in a format in accordance with the rules developed by OBF. The Reject Response will be provided via the same interface as that through which the LSR was placed.

3.2.12 Service Request Changes (Supplemental Service Requests)

3.2.12.1 If an installation or other MCI-requested work requires a change from the original MCI service request in any manner, BellSouth shall notify the appropriate MCI ordering center designated in advance of performing the installation or other work to obtain authorization. BellSouth shall then provide MCI an estimate of additional labor hours or materials. After all installation or other work is completed, BellSouth shall immediately notify the MCI ordering center of the actual labor hours or materials used.

3.2.12.1.1 If a service request can only be partially completed, BellSouth shall notify MCI prior to completing the request, and if MCI approval is received, BellSouth shall follow the jeopardy procedures in subsection 3.2.13.

3.2.12.2 Where BellSouth provides installation and the MCI Customer requests a service change at the time of installation, BellSouth shall immediately notify MCI at the telephone number on the service order of that request. The BellSouth technician should notify MCI in the presence of the MCI Customer so that MCI can negotiate authority to install the requested service directly with that Customer and the technician and revise appropriate ordering documents as necessary. At no time should the BellSouth representative perform any work not ordered by MCI, even at the Customers' request, without approval from the MCI ordering center.

3.2.13 Jeopardy Situations. BellSouth shall provide to MCI notification of any known jeopardy situations prior to the Due Date. Such notification shall contain a new committed Due Date. If BellSouth is unable to provide a new committed Due Date, BellSouth shall provide MCI a supplemental notification containing a new committed Due Date, and BellSouth shall provide a new committed Due Date on a nondiscriminatory basis. BellSouth shall provide notice of missed appointments and any other delay or problem in completing work specified on MCI's service request as detailed on the FOC.

3.2.14 Service Suspensions/Restorations. Where BellSouth provides switching and upon MCI's request through a Suspend/Restore order, BellSouth shall suspend or restore service. BellSouth will deny or disconnect service to MCI's customer on behalf of, and at the request of, MCI. Upon restoration of the customer's service, restoral charges will apply and will be the responsibility of MCI. All requests for denial or disconnection shall be via an LSR.

3.2.15 Loss Notifications. BellSouth shall provide to MCI information notifying MCI of any services disconnected from MCI. Such notification shall be provided electronically on a daily basis, using a process (PMAP website for line loss report) currently in place between the Parties, and any changes in the process must be mutually agreeable.

3.2.16 SOC Notification. Upon completion of a service request submitted electronically, BellSouth shall submit to MCI, via the same electronic interface used to submit the order**,** an order completion notification that complies with industry standards, as modified by the CCP. Completion information for service requests submitted both manually and electronically is available via BellSouth's web-based system known as CLEC Service Order Tracking System (CSOTS).

3.2.17 BellSouth shall provide to MCI information on charges associated with special construction.

3.2.18 Blocking Services. Upon request from MCI, where BellSouth provides switching on a Resale basis, BellSouth shall provide blocking of 700, 900 and 976 services, or other services of similar type as may now exist or be developed in the future. In addition, BellSouth shall provide Billed Number Screening (BNS), including required LIDB updates, or equivalent service for blocking completion of bill-to-third-party and collect calls, on a line, trunk, or individual service basis.

3.3 Cooperative Testing

3.3.1 The Parties shall perform cooperative testing, if requested by MCI, to test Services and Elements purchased by MCI where BellSouth performs cooperative testing on like services for BellSouth's retail entity.

3.3.2 BellSouth and MCI shall work cooperatively to isolate and clear troubles that cannot be isolated to a particular Party's network.

3.4 Network Testing

3.4.1 BellSouth shall perform all pre-service network testing necessary to ensure the services ordered meet the specifications outlined in the technical reference for the service being ordered. Such tests will include all of the tests that BellSouth would perform for the turn-up of its own service. Upon request, BellSouth shall provide MCI with the results from all tests when available.

3.4.1.1 BellSouth shall perform electronic loop tests at MCI's request and provide MCI with results from electronic loop tests.

4 CONNECTIVITY BILLING AND RECORDING

4.1 Connectivity Billing and Recording Interface Performance and Management. Consistent with Attachment 9 of this Agreement, the Parties will comply with the performance measurements and reporting for transactions passed over the electronic Connectivity Billing and Recording interface.

5 CUSTOMER USAGE DATA

5.1 Provision of Customer Usage Data

5.1.1 BellSouth shall provide MCI with billing records in the standard EMI format with all EMI standard fields.

5.1.2 Data circuits (private line or dial-up) may be required between BellSouth and MCI for the purpose of data transmission. Where a dedicated line is required, MCI will be responsible for ordering the circuit and coordinating the installation with BellSouth. MCI will also be responsible for any charges associated with this line. CSU/DSU equipment required on the BellSouth end to attach the line to the mainframe computer and to transmit data will be the responsibility of MCI. Where a dial-up facility is required, dial circuits will be installed in the BellSouth data center by BellSouth and the associated charges assessed to MCI. Additionally, all message toll charges associated with the use of the dial circuit by MCI will be the responsibility of MCI. Associated equipment on the BellSouth end, including a modem, will be the

responsibility of BellSouth. All equipment, including modems and software that is required on the MCI end for the purpose of data transmission will be the responsibility of MCI.

5.2 Performance Measures. BellSouth shall comply with the usage file performance measures, if any, as set forth in Attachment 9.

6 MAINTENANCE AND REPAIR

6.1 Provision of Maintenance and Repair

6.1.1 BellSouth shall provide MCI use of BellSouth's maintenance and repair OSS Function by providing MCI the information, data, processes, and functionalities via an Application-to-Application interface as set forth in this Attachment. BellSouth shall maintain this interface, including, but not limited to, the data connections, on a nondiscriminatory basis and shall comply with the applicable performance measurements set forth in Attachment 9.

6.1.2 For designed services, the Electronic Communications Trouble Administration (ECTA) will allow MCI personnel to perform the following functions for MCI Customers: (i) enter trouble reports in the BellSouth maintenance systems for an MCI Customer; (ii) retrieve and track current status on all MCI Customer trouble reports entered via ECTA; (iii) receive "estimated time to repair" (ETTR) on a Real Time basis; (iv) receive immediate notification in the event a repair person is unable to be present for, or anticipates missing, a scheduled repair appointment; and (v) receive automated notification of trouble closure in conformance with the specifications detailed in the MCI/BellSouth Joint Implementation Agreement (JIA) document.

6.1.3 For non-designed trouble reports processed via TAFI, BellSouth shall provide MCI with the capability to open trouble tickets, analyze and sectionalize the trouble, determine whether it is necessary to dispatch a service technician to the relevant premises, obtain status and receive completion information.

6.2 General Business Requirements and Functions

6.2.1 BellSouth will make repair service available to MCI personnel twenty-four (24) hours a day, seven (7) days a week.

6.2.2 For all repair requests, each Party shall prescreen troubles prior to referring the trouble to the other Party.

6.2.3 Each Party will be the single point of contact for all repair calls on behalf of its customers. The Parties agree to provide one (1) another with toll-free contact numbers for such purposes.

6.2.4 BellSouth shall dispatch maintenance personnel for MCI customers on the same schedule that BellSouth provides for its own customers. BellSouth shall dispatch BellSouth technicians to MCI-designated premises upon request by MCI.

6.2.5 MCI shall handle all interactions with MCI customers including all calls regarding service problems, establishing appointments pursuant to this Section, and notifying the customer of trouble status and resolution, unless otherwise authorized by MCI. BellSouth may contact MCI

customers for the express purpose of performing routine maintenance on BellSouth's network (e.g., to notify a customer of tree trimming operations).

6.2.6 BellSouth shall reconfigure (company initiated activity (CIA) or central office conversion) the MCI service arrangements of MCI's customer for Resale services, UNEs or Combinations in accordance with the FCC's rules regarding Notice of Network Change, 47 C.F.R. 51.325 *et seq*. as well as the procedures described in the Operational Understanding located at http://www.interconnection.bellsouth.com/guides/other_guides/html/gopeu001/index.htm.

6.3 Telephone Service Priority. Upon receipt of a request from MCI containing the appropriate TSP Authorization Codes assigned by the NSEP-TSP, BellSouth shall identify the account with this code. BellSouth will conform to the framework defined by the NSEP-TSP for restoration on a priority basis of the individual accounts.

6.3.1 BellSouth shall supply MCI with a unique number, which may be the customer's actual number, to identify each MCI initial trouble report opened. For repeat trouble reports, if the previous trouble was within a thirty (30) calendar day period, the report will be flagged as a repeat report automatically.

6.3.2 MCI may open a trouble report at any time for any circuit ID for which BellSouth has previously submitted a completion notice for a service request. In addition, MCI may open a trouble report where a previous report for the same circuit ID has been closed by BellSouth. BellSouth's escalation practices are provided in Appendix A and the escalation contact number list is contained in Chapter 4.0 of the Operational Understanding which is provided on the interconnection web site at http://www.interconnection.bellsouth.com/guides/other_guides/html/gopeu001/index.htm

6.3.3 BellSouth shall permit MCI to call BellSouth to verify central office features and functions as they relate to an open trouble report. BellSouth agrees to work with MCI on the initial trouble report to isolate the cause of the trouble and, where possible, resolve the feature/function related trouble at that time.

6.3.4 BellSouth shall advise MCI of any known central office, interoffice (such as fiber cuts), and repeater failures that are known at the time of trouble report issuance. BellSouth shall notify MCI of switch failures pursuant to the Disaster Recovery Plan in Attachment 10 of this Agreement.

6.3.5 BellSouth agrees to provide an ETTR, an appointment time or commitment time, as appropriate, on all trouble reports.

6.3.6 If BellSouth misses the "estimated time to restore"; BellSouth shall use its best efforts to notify MCI in a timely manner.

6.3.7 Each Party may bill the other Party for referring a trouble that requires a dispatch outside of the central office and is found not to be in the network of the Party to whom the trouble was referred. BellSouth will bill its Loop testing rates found in Attachment 2 Exhibit A.

6.3.8 Maintenance charges for premises visits by BellSouth employees or contractors shall be billed to MCI and not to the customer.

6.3.9 BellSouth employees or contractors shall present the customer with a non-branded warranty page that has the order number or trouble ticket number and date on it.

6.3.10 If additional premises work is required that cannot be performed on that visit, BellSouth shall call MCI to schedule another premises visit. Wherever possible, BellSouth will schedule appointments while a technician is at the premises with the customer on the line so that MCI can schedule a new appointment with BellSouth and customer at the same time.

7 WHITE PAGES LISTINGS

7.1 Listings. MCI shall provide all new, changed and deleted listings on a timely basis and BellSouth or its agent will include MCI residential and business customer listings in the appropriate White Pages (residential and business) or alphabetical directories in the geographic areas covered by this Interconnection Agreement. Directory listings will make no distinction between MCI and BellSouth subscribers.

7.2 Rates. So long as MCI provides subscriber listing information (SLI) to BellSouth in accordance with Section 7.2 below, BellSouth shall provide to MCI one (1) primary White Pages listing per MCI subscriber at no charge. Additional/Miscellaneous white pages listings shall be provided as set forth in BellSouth's General Subscriber Services Tariff (GSST).

7.2.1 Procedures for Submitting MCI SLI are found in the BellSouth Business Rules for Local Ordering located at http//www.interconnection.bellsouth.com**.**

7.2.2 MCI authorizes BellSouth, without a LOA or prior written notice, to release all MCI SLI provided to BellSouth by MCI to qualifying third parties via either license agreement or BellSouth's Directory Publishers Database Service (DPDS), GSST, Section A38.2, as the same may be amended from time to time. Such MCI SLI shall be intermingled with BellSouth's own customer listings and listings of any other CLEC that has authorized a similar release of SLI.

7.2.3 No compensation shall be paid to MCI for BellSouth's receipt of MCI SLI, or for the subsequent release to third parties of such SLI. In addition, to the extent BellSouth incurs costs to modify its systems to enable the release of MCI's SLI, or costs on an ongoing basis to administer the release of MCI's SLI, MCI shall pay to BellSouth its proportionate share of the reasonable costs associated therewith. At any time that costs may be incurred to administer the release of MCI's SLI, MCI will be notified. If MCI does not wish to pay its proportionate share of these reasonable costs, MCI may instruct BellSouth that it does not wish to release its SLI to independent publishers, and MCI shall amend this Agreement accordingly. MCI will be liable for all costs incurred and approved by MCI until the effective date of the amendment.

7.2.4 Neither BellSouth nor any agent shall be liable for the content or accuracy of any SLI provided by MCI under this Agreement. BellSouth shall indemnify, hold harmless and defend MCI and its agents from and against any damages, losses, liabilities, demands, claims, suits, judgments, costs and expenses (including but not limited to reasonable attorneys' fees and expenses) arising from BellSouth's tariff obligations or otherwise and resulting from or arising out of any third party's claim of inaccurate MCI listings or use of the SLI provided pursuant to this Agreement, to the

extent such inaccuracy was proximately caused by BellSouth or BellSouth's agents, employees, or contractors. BellSouth shall forward to MCI any complaints received by BellSouth relating to the accuracy or quality of MCI listings.

7.2.5 Listings and subsequent updates will be released consistent with BellSouth system changes and/or update scheduling requirements.

7.3 Unlisted/Non-Published Subscribers. MCI will be required to provide to BellSouth the names, addresses and telephone numbers of all MCI customers who wish to be omitted from directories. Unlisted/Non-Published SLI will be subject to the rates as set forth in BellSouth's GSST.

7.4 Inclusion of MCI Customer in Directory Assistance Database. BellSouth will include and maintain MCI subscriber listings in BellSouth's Directory Assistance databases at no recurring charge and MCI shall provide such Directory Assistance listings to BellSouth at no recurring charge.

7.5 Listing Information Confidentiality. BellSouth will afford MCI's directory listing information the same level of confidentiality that BellSouth affords its own directory listing information.

7.6 Additional and Designer Listings. Additional and designer listings will be offered by BellSouth at tariffed rates as set forth in the GSST.

7.7 Directories. BellSouth or its agent shall make available White Pages directories to MCI subscribers at no charge or as specified in a separate agreement with BellSouth's agent.

ATTACHMENT 7

BILLING

TABLE OF CONTENTS

1. PAYMENT AND BILLING ARRANGEMENTS 3

2. BILLING DISPUTES 13

LATE PAYMENT CHARGE REFERENCE MATRIX……EXHIBIT A

CREDITWORTHINESS INFORMATION……EXHIBIT B

BILLING

1 BILLING AND PAYMENT ARRANGEMENTS

1.1 The terms and conditions set forth in this Attachment shall apply to the billing and payment for all services ordered and provisioned pursuant to this Agreement unless otherwise set forth herein.

1.2 Billing. The Parties acknowledge that they have already developed and deployed an Application-to-Application interface (CONNECT:Direct). BellSouth will continue to bill through the existing electronic interface, unless such interface is unavailable due to a Force Majeure situation, using the Carrier Access Billing System (CABS), Integrated Billing System (IBS) and/or Customer Records Information System (CRIS) depending on the particular service(s) provided to MCI under this Agreement. BellSouth will format all bills in accordance with the specifications already in use between the Parties, including but not limited to the CABS Billing Output Specification (CBOS) Standard or CLUB/EDI format, depending on the type of service provided. For those services where standards have not been developed, BellSouth's billing format may change in accordance with applicable industry standards. Any changes to either Party's CONNECT:Direct Node ID must be sent to the other Party no later than ninety (90) days before the changes take effect.

1.2.1 The Parties shall provide to each other billing and recording information in a non-discriminatory manner and at a minimum, no less favorable in quality than that which it provides to itself and other Telecommunication Carriers.

1.2.2 The Parties acknowledge that MCI will continue to provide billing and recording to BellSouth in paper format until such time that the Parties agree to a mutually acceptable electronic format.

1.2.3 Reciprocal compensation charges will be identified as local jurisdiction, and not as interstate or intrastate, on each bill where jurisdiction is identified. Reciprocal compensation charges shall be identified by a unique service type. IntraLATA toll charges will be identified as Intrastate/IntraLATA or Interstate/IntraLATA. Intercarrier compensation shall be provided as set forth in Attachment 3 to this Agreement. These intercarrier compensation carriers shall be identified by a unique service type. Any switched access charges associated with interexchange carrier access to the resold exchange lines will be billed by, and due to BellSouth.

1.2.4 BellSouth will render bills each month on the established bill days for each of MCI accounts via CONNECT:Direct as the primary medium for delivery. Upon request by MCI, the Parties may agree to deliver bills via any other media without additional cost to the other Party. If for any reason CONNECT:Direct or the other selected media becomes unavailable, the Parties will deliver bills to each other by some other mutually agreed upon media.. In any case, BellSouth shall deliver billing information to a location specified by MCI. If either Party requests billing media or copies of bills in addition to those set forth herein, or as provided in the Unbillable Revenue Section of this Attachment, the billing Party will provide these to the billed Party at the billed Party's expense (as set forth in this Agreement, the billing Party's applicable tariff, etc.). Each Party will retain, at its sole expense, copies of all billing information transmitted to the other Party for at least ninety (90) days after transmission to the other Party.

1.2.5 BellSouth will bill MCI in advance for all services to be provided during the ensuing billing period except charges associated with service usage and nonrecurring charges, which will be billed in arrears.

1.2.6 The Parties shall comply with all applicable industry standards for telecommunications billing.

1.2.7 The Parties shall issue all bills containing billing data and information in accordance with the most current version of CBOS. To provide for any development time that might be required CBOS versions that are finalized in July and published in August will be implemented between March 1 and May 31. CBOS versions that are finalized in December and published in January will be implemented between September 1 and November 30.

1.2.8 Both Parties will provide a list that identifies any billing record, phrase code or element value differences from the CBOS standard ("Differences List").

1.2.9 BellSouth shall provide MCI with records, as available, necessary to bill third parties for terminating traffic to its customers including but not limited to 110131 Records, regardless of the method used to provide service to its customers.

1.2.10 The Parties shall bill each other for each Service supplied pursuant to this Agreement at the rates forth in this Agreement.

1.2.11 Billing Account Number (BAN).

1.2.11.1. The billed Party shall be assigned a separate and unique BAN in the form agreed to by the Parties, and such number shall be provided to the billed Party on each bill in which charges for services appear. The data associated with each BAN shall enable the billed Party to identify the service as ordered. Each bill shall set forth the quantity and description of each such service provided and billed to the other Party, including USOC's and similar information, where applicable**.** All billed charges shall indicate the state from which such charges were incurred, except in cross boundary situations mandated by the Commission and identified in the appropriate tariff (General Subscriber Services Tariff Section A3 or NECA 4) where the serving state will be indicated.

1.2.11.2 The Parties shall bill each other monthly for all charges incurred by and credits and/or adjustments due to the purchasing Party for those services ordered, established, utilized or performed pursuant to this Agreement. BANs shall be consolidated by service type according to industry standards and as otherwise mutually agreed to by the Parties. Bill formats shall be in compliance with industry standards. Adequate documentation shall be sent for any debit/credit adjustments.

1.2.11.3 BellSouth shall assign specific adjustment or reference numbers provided by MCI to each adjustment and credit related to billing disputes, and assigned by BellSouth for other adjustments related to BellSouth proactive billing reviews or back-billing, included on its bills.

1.2.11.4 The Bill Date must be present on each bill transmitted by the Parties, and must be a valid calendar date. All charges incurred under this Agreement shall be considered final two (2) years after such charges were either billed or should have been billed.

1.2.11.5 The Bill Date will be the same day, month to month, per BAN. Each Party will provide the other Party at least thirty (30) days written notice prior to changing, deleting or transferring services between BANs. The Parties shall provide one (1) billing invoice associated with each BAN. Each invoice must contain an invoice number (which will vary from month to month). On each bill associated with a BAN, the appropriate invoice number and the charges contained on that invoice must be reflected. Each Party shall deliver all bills to the other Party in accordance with the Service Quality Measurement (SQM) in Attachment 9 but in no event later than ten (10) days after the Bill Date and at least twenty (20) days prior to the payment due date (as described in this Attachment), whichever is earlier. Any bill received on a Saturday, Sunday or a generally recognized holiday will be deemed received the next business day. If either Party fails to receive

billing data and information within the time period specified above, the payment due date will be extended by the number of days receipt has been delayed.

1.2.11.6 Measurement of minutes of use will be in actual conversation seconds for those services other than resale that are billed based on conversation time. The total conversation seconds measured by each billing switch per chargeable rate elements will be totaled for the entire monthly bill cycle, and rounded to the nearest whole minute for UNEs, or the nearest whole minute for local interconnection usage. Local Resale will be billed in the increments in accordance with the BellSouth's underlying retail tariff.

1.2.11.7 Each Party shall provide to the other Party a single point of contact (SPOC) for handling any questions or problems regarding bills or that may arise during the implementation and performance of the obligations under this Attachment. Each SPOC will be available via a single telephone and telephone number (not through an answering center).

1.2.11.8 Each Party will determine its terminating interconnection minutes of use, and this information will be used as the basis for its interconnection bills.

1.3 Unbillable Revenue (CMDS/ODUF/EODUF). The term “unbillable” refers to a message or service that cannot be accurately billed to the correct customer despite all reasonable attempts to recover the message data.

1.4 Format and Transmission Failures.

1.4.1 BellSouth shall format and transmit billing and recording information to MCI as provided in this Agreement. In the event that billing information is improperly provided to MCI, it shall notify its regular BellSouth collections contact that payment will be delayed as a result. The billing information will be corrected and resubmitted to MCI in a form that can be processed by MCI. Although the actual Bill Date on the bill would not change upon such notification, BellSouth shall waive late payment charges and defer normal collections activity for that payment.

1.5 Recording Failures

1.5.1 When BellSouth carries or switches calls and loses or fails to make a recording, regardless of whether MCI or BellSouth is performing the billing function, BellSouth shall notify MCI of the recording failure(s) as soon as practicable. BellSouth shall notify MCI of the amount of estimated MCI unbillable revenue as soon as practicable. BellSouth shall compensate MCI for this unbillable revenue within three (3) bill periods. Such compensation shall be net of revenue BellSouth demonstrates it would have received for services provided to MCI, if any, but for which Bell South could not render bills as a result of any recording loss(es).

1.6 Loss of Recorded Usage Data.

1.6.1 In the event MCI Recorded Usage Data is determined to have been lost, damaged or destroyed as a result of an act, error or omission, including but not limited to the acts, errors or omissions of BellSouth employees, agents and suppliers, and the failures of BellSouth hardware, software and other BellSouth equipment, when BellSouth is performing the billing and/or recording function, upon MCI's request, BellSouth shall attempt to recover the Recorded Usage Data, and provide multiple billing media or additional copies of the bills at no charge to MCI. In the event the data cannot be recovered by BellSouth, BellSouth and MCI shall mutually agree upon a credit amount based upon an estimate of the affected messages and associated revenue, reduced by a mutually agreed upon estimate of associated Recording Service charges, based upon the method described in the Determination of Losses Section of this Attachment.

1.7 Lost, Damaged or Destroyed Message Data.

1.7.1 When MCI message data is lost, damaged or destroyed as a result of a BellSouth act, error or omission, including but not limited to the acts, errors or omissions of BellSouth employees, agents and suppliers, and the failures of BellSouth hardware, software and other BellSouth equipment, when BellSouth is performing the billing and/or recording function, and the data cannot be recovered or resupplied within two (2) bill periods, BellSouth shall notify MCI of the estimated amount of MCI unbillable revenue as soon a practicable. BellSouth shall compensate MCI for this unbillable revenue within three (3) bill periods.

1.7.2 When MCI message data is lost, damaged or destroyed as a result of a BellSouth act, error or omission, including but not limited to, the acts, errors or omissions of BellSouth employees, agents and suppliers, and the failures of BellSouth hardware, software and other BellSouth equipment, when MCI is performing the billing and/or recording function, and the data cannot be recovered or resupplied within two (2) bill periods, BellSouth shall notify MCI of the estimated amount of MCI unbillable revenue as soon as practicable. BellSouth shall compensate MCI for the net loss to MCI within three (3) bill periods. The lost revenue per day will be based upon the daily average of revenues for the corresponding days of the week (e.g. four (4) Mondays) in the most recent month for which MCI supplied data to BellSouth before the day of loss, except:

1.7.2.1 If the loss occurs on a weekday which is a holiday (except Mother's Day or Christmas), BellSouth will use the daily average of revenues from the four (4) Sundays of the most recent month for which MCI supplied data to BellSouth before the day of loss;

1.7.2.2 If the loss occurs on Mother's Day or Christmas, BellSouth will use the daily average of revenue from that day in the preceding year (if available from the data supplied by MCI to BellSouth before the day of loss); and

1.7.2.3 If the loss occurs on a day not a holiday but one (1) or more of the days lost is a holiday, BellSouth will use additional corresponding days from the next most recent month for which MCI supplied data to BellSouth before the day(s) of loss.

1.8 Determination of Losses.

1.8.1 BellSouth shall review its daily controls to determine how much data has been lost and notify MCI in advance of the date of monthly billing statement that shall contain such adjustments for the recording failure(s) and/or lost, damaged or destroyed message data. BellSouth shall provide sufficient information to allow MCI to analyze the data supporting BellSouth’s estimates of revenue due to MCI.

1.9 Material Message Data Loss. BellSouth shall review its daily controls to determine if any message data has been lost. The message threshold (5000 (this is the number of messages on the switch for all carriers including inter and intraLATA as well as Local) messages within the missing data period) used by BellSouth to determine if there has been a material loss of its own messages will also be used to determine if a material loss of MCI’s messages has occurred. A nonmaterial loss will not be reported and any unbillable revenues will not be credited to MCI. When it is known or suspected that there has been a material loss, actual message and minute volumes will be reported to the extent any are available. Where actual data is not available, a full day shall be estimated for the recording entity as outlined in the Estimated Volumes Section. The loss is then determined by subtracting recorded data, if any is available, from the estimated total day's business.

1.10 Estimated Volumes. Where message and minute volumes must be estimated, BellSouth shall prepare message and minute volume reports for MCI for the eight (8) weeks proceeding the week in which the loss occurred. BellSouth shall secure message and minute counts for the corresponding day of the week from the eight (8) weeks preceding the week in which the loss occurred. BellSouth shall apply the appropriate average revenue per message to the estimated message volume to arrive at the amount of estimated lost revenue. All such reports shall be made available without cost to MCI upon request. All such reports shall be considered confidential in accordance with the terms of this Agreement and afforded the full protection granted to confidential information in accordance with the terms of this Agreement.

1.11 Complete Loss. Estimated message and minute volumes for each loss consisting of an entire/tape or file lost in transit, lost after receipt, degaussed before processing, received blank or unreadable, etc. shall be reported as soon as practicable. If applicable, the loss of one (1) or more boxes of operator tickets shall also be estimated and reported.

1.11.1 BellSouth shall notify MCI in advance of the date of the monthly billing statement that shall contain adjustments determined in accordance with this Section of the Attachment. BellSouth shall provide sufficient information to allow MCI to analyze the data supporting BellSouth's estimate of revenue due to MCI.

1.12 Neither Party will perform billing and collection services for the other as a result of the execution of this Agreement.

1.13 In the event that this Agreement or an amendment to this Agreement results in a rate change to recurring rate elements that are billed in advance, the Parties will make an adjustment to such recurring rates billed in advance at the previously effective rate. The adjustment shall reflect billing at the new rates from the Effective Date of the Agreement or amendment.

1.14 Establishing Accounts. After submitting a credit profile and deposit, if required, and after receiving certification as a local exchange carrier from the appropriate regulatory agency, MCI will provide the appropriate BellSouth advisory team/local contract manager the necessary documentation to enable BellSouth to establish accounts for Local Interconnection, Network Elements and Other Services, Collocation and/or resold services. Such documentation shall include the Application for Master Account, if applicable, proof of authority to provide telecommunications services, the appropriate Operating Company Numbers (OCN) for each state as assigned by the National Exchange Carriers Association (NECA), Carrier Identification Code (CIC), Access Customer Name and Abbreviation (ACNA), Blanket Letter of Authorization (LOA), Misdirected Number form, and a tax exemption certificate, if applicable. If MCI has provided necessary documentation as required in this Section pursuant to a previous interconnection agreement for accounts established pursuant to the previous interconnection agreement which are now governed by the rates, terms and conditions of this Agreement, then the Parties agree that MCI has satisfied the requirements of this Section for those accounts. Notwithstanding anything to the contrary in this Agreement, until such time as BellSouth is able to provide services under a new account in a shorter time frame, MCI may not order services under a new account established in accordance with this Section until thirty (30) days after BellSouth’s receipt of all of the above information from MCI.

1.14.1 Intentionally omitted.

1.14.2 Except as provided herein, BellSouth will not become involved in billing disputes that may arise between MCI and an MCI customer.

1.15 Payment Due. Payment for services provided is due on or before the payment due date. Payment is considered to have been made when received by the billing Party.

1.16 Due Dates. The payment due date shall ordinarily be thirty (30) days after the Bill Date set forth on the applicable bill. If the payment due date falls on a Sunday or on a generally recognized holiday that is observed on a Monday, the payment due date shall be the next business day. If the payment due date falls on a Saturday or on a holiday which is observed on Tuesday, Wednesday, Thursday, or Friday, the payment due date shall be the last non-holiday day preceding such Saturday or holiday. In the event of an emergency, system failure or other such condition which prevents BellSouth from transmitting billing information via CONNECT:Direct or the other media selected by the Parties, BellSouth shall notify MCI of such difficulties as soon as practicable and will deliver the billing information to MCI by another media as agreed to by the Parties. In such cases the payment due date will be thirty (30) days after the Bill Date in a form that can be processed and that otherwise meets the specifications set forth in this Attachment. If payment is not received by the payment due date, a late payment charge, as set forth in the Late Payment Section below shall apply.

1.17 Late Payment. The late payment charge shall be the portion of the payment not received by the payment due date multiplied by a late factor and will be applied on a per bill basis. The late factor shall be as set forth in the Late Payment Charge Reference Matrix attached as Exhibit A to this Attachment 7 and incorporated herein. In no event shall such late factors exceed applicable law.

1.17.1 In addition to any applicable late payment charges, when a check or draft tendered for payment of an account is subsequently returned by the institution on which it is written due to failure of the issuing institution to honor the check or draft for a good and sufficient reason, a reasonable fee will be charged to the paying Party, to reimburse the paid Party for the direct costs it incurs because of the returned check or draft, up to the maximum amount allowed by law for each such returned check or draft. The returned check charge also applies to returned Automatic Funds Transfer transactions.

1.18 Tax Exemption. Upon BellSouth's receipt of a tax exemption certificate, the total amount billed to MCI will not include those taxes or fees from which MCI is exempt.

1.18.1 Discontinuing Service to MCI. The procedures for discontinuing service to MCI are as follows:

1.18.1.1 In order of severity, Suspend/Suspension, Discontinue/Discontinuance and Terminate/Termination are defined as follows for the purposes of this Attachment:

1.18.1.2 Suspend/Suspension is the temporary restriction of the billed Party's access to the ordering systems and/or access to the billed Party's ability to initiate PIC-related changes. In addition, during Suspension, pending orders may not be completed, and orders for new service or changes to existing services may not be accepted.

1.18.1.3 Discontinue/Discontinuance is the denial of service by the billing Party to the billed Party that will result in the disruption and discontinuation of service to the billed Party's customers. Additionally, at the time of Discontinuance, BellSouth will remove any Local Service Freezes in place on the billed Party's customers.

1.18.1.4 Terminate/Termination is the disconnection of service by the billing Party to the billed Party.

1.18.2 BellSouth reserves the right to Suspend, Discontinue or Terminate service to MCI to the extent necessary to prevent the unlawful use or misuse of BellSouth facilities or service or to the extent MCI fails to pay any undisputed amounts due in accordance with the terms of this Section.

1.18.3 Suspension. If payment of amounts due are not received by the Bill Date in the month after the original Bill Date, BellSouth will provide written notice to MCI that additional applications for service may be refused, that any pending orders for service may not be completed, and/or that access to ordering systems may be suspended if payment of such amounts, and all other amounts not in dispute that become past due before refusal, incompletion or Suspension of service, are not received by the fifteenth (15th) day following the date of said notice. For CABS billed UNEs, MCI will receive a PIC freeze notice which is the Suspension notice for CABS billed services. This PIC freeze notice will be sent the day after the payment due date and is notification that CABS billed services will be suspended within seven (7) days if payment is not received. For CRIS and IBS billed services, the Suspension notice shall provide that all past due charges for CRIS and IBS billed services , and all other amounts that become past due for such services , must be paid within thirty (30) days from the date of said notice to avoid Discontinuance.

1.18.4 Discontinuance. For CRIS and IBS services, the same Suspension notice shall also provide that all past due charges for CRIS and IBS billed services, and all other amounts that become past due for such services before Discontinuance, must be paid within thirty (30) days from the date of the Suspension notice to avoid Discontinuance. For CABS billed services. BellSouth will provide a Discontinuance notice that is separate from the Suspension notice, stating that BellSouth may Discontinue the provision of existing services to MCI if payment of such amounts, and all other amounts not in dispute that become past due before Discontinuance of service , are not received by the thirtieth (30th) day following the date of the Discontinuance notice. In the case of security deposits, if, in the absence of any dispute or agreed to extension by the Parties, MCI fails to secure a deposit requested pursuant to Section 1.21 of this Attachment by BellSouth within the time frames provided in that Section, BellSouth may commence to discontinue service in accordance with this Section.

1.18.4.1 In the case of Discontinuance of services, all billed charges, as well as applicable disconnect charges, shall become due.

1.18.4.2 Discontinuance of service to MCI may affect a discontinuance of service to MCI's customers. BellSouth will reestablish service for MCI upon payment of all past due charges and any applicable connection fee. MCI is solely responsible for notifying any of its customers that may be affected by the Discontinuance of service by BellSouth. If, within seven (7) days after MCI's services have been Discontinued, MCI pays all past due charges, including late payment charges, outstanding security deposit request amounts if applicable and any applicable restoral charges, then BellSouth will reestablish service for MCI .

1.18.5 Termination. If within seven (7) days after service has been Discontinued and MCI has failed to pay all past due charges as described above, BellSouth will Terminate service to MCI.

1.19 If the billing Party Suspends, Terminates or Discontinues service to the billed Party in error, the billing Party will reestablish service to the billed Party immediately and without cost to the billed Party.

1.20 Deposit Policy.

1.20.1 General Terms. BellSouth reserves the reasonable right to secure the accounts of new CLECs (entities with no existing relationship with BellSouth for the purchase of wholesale services as of the Effective Date) and certain existing CLECs (entities with an existing relationship with BellSouth for the purchase of wholesale services as of the Effective Date) with which it has a

continuous relationship of less than one (1) year, or that do not otherwise meet the qualifications described in this Section for continuing creditworthiness with a suitable form of security pursuant to this Section.

1.20.1.1 With the exception of new CLECs with a D&B credit rating equal to 5A1, BellSouth may secure the accounts of all new CLECs consistent with the terms set forth below. Further, if an existing CLEC has filed for bankruptcy protection within twelve (12) months prior to the Effective Date of this Agreement, BellSouth may treat the existing CLEC, as a new CLEC for purposes of establishing security on its accounts.

1.20.2 Initial Determination of Creditworthiness. Upon request, BellSouth may require MCI to complete the BellSouth Credit Profile which is located on the BellSouth Interconnection Services web site at the following internet address - http://www.interconnection.bellsouth.com/, in order to determine whether or not security should reasonably be required, and in what amount. This form contains information requests similar in nature to that in Exhibit B. The Parties have discussed MCI's creditworthiness in accordance with the requirements of this Section and determined that no additional security of any kind is required upon the execution of this Agreement.

1.20.3 Subsequent Determination of Creditworthiness. Subject to a standard of commercial reasonableness, if a material change in the circumstances of the CLEC so warrants and/or gross monthly billing has increased beyond the level most recently used to determine the level of security deposit, BellSouth reserves the right to request additional security subject to the criteria set forth in this Section. BellSouth shall provide MCI fifteen (15) days written notice of its intent to review MCI's credit worthiness. Upon intent to review notice, the Parties agree to work together to review MCI's credit worthiness. Upon completion of the credit review and based on BellSouth's analysis of the BellSouth Credit Profile and other relevant information regarding MCI's financial condition, BellSouth reserves the right to require MCI to provide BellSouth with a suitable form of security deposit for MCI's account.

1.20.4 If BellSouth requires MCI to provide a security deposit for new Service, MCI shall provide such security deposit prior to the inauguration of such new Service. If BellSouth requests additional security deposit (or requires a security deposit if none was previously requested), MCI shall pay any applicable security deposit for existing service within (a) fifteen (15) days of the deposit request notice if the deposit request amount is less than or equal to $5 million for all BellSouth states combined, or (b) thirty (30) days of the deposit request notice if the deposit request amount is greater than $5 million for all BellSouth states combined. Such notice period will start the first business day after the deposit request notice is rendered. If the deposit request amount is greater than $5 million for all BellSouth states combined, the deposit request notice and a written explanation of the factors used to determine credit worthiness will be sent by overnight mail to MCI. If the deposit request amount is less than or equal to $5 million for all BellSouth states combined, the deposit request may be rendered by certified mail or overnight delivery and a written explanation of the factors used to determine credit worthiness will be mailed to MCI only if a written request for said information is received from MCI. If, in the absence of any dispute or agreed to extension by the Parties, MCI fails to secure the deposit requested pursuant to this Section by BellSouth within the time frames provided in this subsection above, BellSouth may commence to discontinue service in accordance with Section 1.19 of this Attachment. MCI may fulfill the security deposit requirement determined in accordance with the terms of this Attachment by Surety Bond (BellSouth form), Letter of Credit (BellSouth form), cash, or any other form of security proposed by MCI and acceptable to BellSouth, or any combination of the above. If the security deposit requirement is in the form of cash, interest shall accrue on the Cash Deposit in accordance with BellSouth's tariff on cash deposits, or at twelve percent (12%) per annum, whichever is less. The amount of the security deposit determined in accordance with the

terms of this Attachment shall not exceed two (2) month's estimated billing for new CLECs or two (2) month's actual billing under this Agreement for existing CLECs.

1.20.5 Any such security shall in no way release the existing CLEC from its obligation to make complete and timely payments of its bills, subject to the bill dispute procedures set forth in this Attachment.

1.20.6 BellSouth will not require a security deposit from existing CLECs that meet the following factors:

1.20.6.1 The CLEC must have a good payment history, based upon the preceding twelve (12) month period. A good payment history shall mean that less than ten percent (10%) of the non-disputed receivable balance is aged beyond the due date. Only good faith disputes submitted to BellSouth pursuant to the procedures set forth in the Parties' interconnection agreement will be considered in determining the "non-disputed receivable balance."

1.20.6.2 The existing CLEC's liquidity status, based upon a review of Earnings Before Interest, Taxes, Depreciation and Amortization (EBITDA), is EBITDA positive for the prior four (4) quarters of financials (at least one (1) of which must be an audited financial report) excluding any nonrecurring charges or special restructuring charges.

1.20.6.3 If the existing CLEC has a current bond rating, it must have a bond rating of BBB or above, or has a current bond rating between CCC and BB and meets the following criteria for the last Fiscal Year End and for the prior four (4) quarters of reported financials:

1.20.6.3.1 Free cash flow positive;

1.20.6.3.2 Positive tangible net worth;

1.20.6.3.3 Debt/tangible net worth ratio between 0 and 2.5; and

1.20.6.3.4 Customer is compliant with all financial maintenance covenants.

1.20.7 BellSouth shall release or return any security, within thirty (30) days of its determination that such security is no longer required by the terms of this Attachment, or within thirty (30) days of MCI and BellSouth establishing that it satisfies the standards set forth in this Attachment or at any such time as the provision of service to MCI is terminated pursuant to this Agreement as applicable. The amount of the deposit will first be credited against any of MCI's outstanding account(s), and any remaining credit balance will be refunded within 30 days.

1.20.8 If at any time subsequent to the return of a deposit, MCI evinces a poor payment history or fails to satisfy the conditions set forth in this deposit policy, Bellsouth may require a security deposit.

1.20.9 If MCI provides a security deposit or additional security deposit in the form of an irrevocable letter of credit as required herein, MCI shall maintain the irrevocable letter of credit until it has been determined that such security is no longer required by the terms of this Attachment. If MCI is in default of its payment obligations under this Attachment and fails to maintain the irrevocable letter of credit, BellSouth may draw down the full amount of such letter of credit, within forty-eight (48) hours prior to its expiration, if MCI fails to renew the letter of credit or fails to provide BellSouth with evidence that MCI has obtained a suitable replacement for the letter of credit. If MCI provides a security deposit or additional security deposit in the form of a surety bond as required herein and the bonding company's credit rating falls below a rating of B, MCI shall provide BellSouth with suitable security deposit to replace the surety bond. If MCI

fails to provide a suitable replacement for the surety bond within thirty (30) days of BellSouth's written notice to MCI that other security is required, BellSouth may take action on such surety bond and apply the proceeds to MCI's account.

1.21 Notices.

1.21.1 Notwithstanding anything to the contrary in this Agreement, all bills and notices regarding billing matters, including notices relating to security deposits, Suspension, Discontinuance, and/or Termination of services for nonpayment, by the billed Party shall be forwarded to the individual at the address provided by each Party in the establishment of its billing account(s) or such other address as may be established from time to time by either Party, or to the individual at the address subsequently provided by a Party as the contact for billing information or such other address as may be established from time to time by either Party. All monthly bills and notices described in this Attachment shall be sent to the same individual(s) and/or address(es) until otherwise notified by the other Party. Notices regarding Suspension, Discontinuance or Termination of services and/or security deposits also shall be sent via certified mail to the individual(s) listed in the Notices provision of the General Terms and Conditions Section of this Agreement.

1.22 Rates

1.22.1 If a rate is identified as interim by the Commission, then upon adoption of a final rate by the Commission, either Party may elect to change the interim rate to conform to the final rate upon written notice to the other Party. If either Party elects to change an interim rate to conform to a final rate, the final rate will be substituted for the interim rate and will remain in effect for the remainder of this Agreement unless otherwise changed in accordance with the terms of this Agreement. Unless otherwise agreed to by the Parties, the interim rate shall be replaced by a final rate retroactive to the effective date of this Agreement, the effective date of an amendment requested by a Party based upon a Commission order, or the effective date of an amendment requested by a Party based upon a Commission order that establishes an effective date for a final rate. In the event the effective date for a final rate is established by a Commission order, the final rate shall be retroactive to that date.

1.22.2 If a Party requests a function or service for which no rate has been set forth in this Agreement, a Party may request the other Party to provide such function or service for which no rate has been set forth in this Agreement pursuant to an interim rate to be determined as follows:

1.22.2.1 In the event there is a Commission approved rate for the requested function or service in that State, that rate shall be for the specific service function or service requested will be as set forth in the applicable Commission Order, the providing Party's applicable tariff or as negotiated by the Parties in good faith and in compliance with Applicable Law upon request by either Party.

1.22.2.2 In the event the Parties cannot agree upon a rate for any particular function or service, either Party may invoke the dispute resolution provisions of this Agreement to establish such a rate. Until a final rate for the function or service has been established, a Party shall provide the requested function or service, if and when technically feasible, at an interim rate proposed by the providing Party in accordance with the requirements set forth in the Act. Upon the establishment of a final rate, the Parties shall retroactively true up the rate in accordance with Section 27 of the General Terms and Conditions.

1.22.3 Rates set forth in this Agreement pertaining to Network Elements are for Network Elements on an individual, stand-alone basis, and for combinations of Network Elements described in this Agreement. If either Party purchases a function or service from a tariff, all terms, conditions and rates as set forth in such tariff shall apply.

1.22.4 All rates set forth in this Agreement for functions or services required to be provided by the Act shall comply with the standards set forth by the Act and effective orders of the FCC and the Commission. Such rates shall be just, reasonable, nondiscriminatory and in accordance with the principles set forth in the Act and this Agreement.

2 BILLING DISPUTES

2.1 For purposes of this Section, a billing dispute means a reported dispute of a specific amount of money actually billed by either Party. The dispute must be clearly explained by the disputing Party and supported by written documentation, which clearly shows the basis for disputing charges. Claims by the billed Party for damages of any kind will not be considered a billing dispute for purposes of this Section. The disputing Party will make full payment of any undisputed amounts to the billing Party within thirty (30) days after the Bill Date.

2.1.1 Written documentation may consist of, but is not limited to, the following information where such information is relevant to the dispute and available to the disputing Party:

2.1.1.1 The nature of the dispute, including the basis for the disputing Party's belief that the bill is incorrect;

2.1.1.2 The type of usage;

2.1.1.3 The end office where the minutes of use originated or terminated;

2.1.1.4 The number of minutes in dispute;

2.1.1.5 The BANs;

2.1.1.6 The dollar amount in dispute;

2.1.1.7 The date of the bill in question;

2.1.1.8 Line number, trunk number and 26 Code (TSC) may also be provided;

2.1.1.9 PON and dates involved (due date or as of date) for disputes involving order activity and what the disputing Party believes is incorrect and why it believes this to be incorrect. For order activity disputes, documentation may include traffic reports, billing cycle, and if the service is shared, both main and shared service BANs. Line number, trunk number and 26 code as well as end office ID may also be provided; or

2.1.1.10 Any other information necessary to facilitate dispute resolution. If additional information from the disputing Party is necessary to resolve the dispute, the other Party may request that the disputing Party provide this information. The request for any additional information may affect the dispute date established by this Attachment if it delays the dispute resolution process.

2.2 In the event of a billing dispute, the Parties shall use best efforts to resolve the dispute within sixty (60) days from the notification date.

2.2.1 If the dispute is resolved in favor of the billing Party and the disputing Party paid the disputed amount on or before the payment due date, no interest or charges will apply.

2.2.2 In the absence of a separate agreement between the Parties to pay or withhold the disputed amount, if the dispute is resolved in favor of the billing Party and the disputing Party withheld the disputed amount, any payments withheld pending settlement will be subject to interest and a late payment charge unless the billing Party failed to provide the billing information required by this Section.

2.2.3 If the dispute is resolved in favor of the disputing Party and the disputing Party paid the disputed amount, the disputing Party shall receive a credit for the disputed amount plus interest as set forth herein.

2.2.4 Within five (5) business days of the billing Party's denial, or partial denial, of the billing dispute, if the disputing Party is not satisfied with the billing Party's resolution of the billing dispute or if no response to the billing dispute has been received by the disputing Party by such sixtieth (60th) day, the disputing Party must pursue the escalation process as outlined in the Billing Dispute Escalation Matrix, set forth on BellSouth's Interconnection Services Web site at http://interconnection.bellsouth.com/guides/html/billing.html, or the billing dispute shall be considered denied and closed. If the dispute is not resolved within the allotted time frame, the following dispute resolution procedure shall begin:

2.2.4.1 If the dispute is not resolved within sixty (60) days, the dispute shall be escalated to the second level of management for resolution.

2.2.4.2 If the dispute is not resolved within ninety (90) days, the dispute shall be escalated to the third level of management for resolution.

2.2.4.3 If, after escalation, the Parties are unable to reach resolution, then the aggrieved Party, if the aggrieved Party elects to pursue the dispute, shall pursue dispute resolution in accordance with the General Terms and Conditions of this Agreement.

2.3 The date of resolution will be the date on which the billing Party completes its investigation of the dispute, notifies the disputing Party of the disposition and, if the billing dispute is resolved in favor of the disputing Party, applies the credit for the amount of the dispute resolved in disputing the Party's favor to the disputing Party's bill, including interest on the disputed amount as appropriate.

2.4 Each Party shall credit the other for incorrect billing charges including without limitation: overcharges, services ordered or requested but not delivered, interrupted services, services of poor quality, and installation problems if caused by the billing Party. Such credits shall be set forth in the appropriate section of the bill pursuant to CBOS guidelines.

2.5 The late payment charge for both Parties shall be calculated based on the portion of the payment not received by the payment due date multiplied by the late factor as set forth in Exhibit A.

LATE PAYMENT CHARGE REFERENCE MATRIX

State and Reference	Section	Affected Services
Alabama		
General Subscriber Services Tariff	A2.4.3 C.	DSO UNE Loops, Resale Voice Services, Resale Data Services (e.g., Synchronet)
Access Services Tariff	E2.4.1 B.3	Hi-Cap Loops, UNE Transport, Interconnection Trunks, Shared/Common Transport, Databases, Operator Services/Directory Assistance, Collocation
Florida		
General Subscriber Services Tariff	A2.4.3 C.	DSO UNE Loops, Resale Voice Services, Resale Data Services (e.g., Synchronet)
Access Services Tariff	E2.4.1 B.3	Hi-Cap Loops, UNE Transport, Interconnection Trunks, Shared/Common Transport, Databases, Operator Services/Directory Assistance, Collocation
Georgia		
General Subscriber Services Tariff	A2.4.3. D.	DSO UNE Loops, Resale Voice Services, Resale Data Services (e.g., Synchronet)
Access Services Tariff	E2.4.1 B.3	Hi-Cap Loops, UNE Transport, Interconnection Trunks, Shared/Common Transport, Databases, Operator Services/Directory Assistance, Collocation
Kentucky		
General Subscriber Services Tariff	A2.4.3 H.	DSO UNE Loops, Resale Voice Services, Resale Data Services (e.g., Synchronet)
Access Services Tariff	E2.4.1 B.3	Hi-Cap Loops, UNE Transport, Interconnection Trunks, Shared/Common Transport, Databases, Operator Services/Directory Assistance, Collocation
Louisiana		
General Subscriber Services Tariff	A2.4.3 G.	DSO UNE Loops, Resale Voice Services, Resale Data Services (e.g., Synchronet)
Access Services Tariff	E2.4.1 B.3	Hi-Cap Loops, UNE Transport, Interconnection Trunks, Shared/Common Transport, Databases, Operator Services/Directory Assistance, Collocation
Mississippi		
General Subscriber Services Tariff	A2.4.3 H.	DSO UNE Loops, Resale Voice Services, Resale Data Services (e.g., Synchronet)
Access Services Tariff	E2.4.1 B.3	Hi-Cap Loops, UNE Transport, Interconnection Trunks, Shared/Common Transport, Databases, Operator Services/Directory Assistance, Collocation
North Carolina		
General Subscriber Services Tariff	A2.4.3 C.	DSO UNE Loops, Resale Voice Services, Resale Data Services (e.g., Synchronet)
Access Services Tariff	E2.4.1 B.3	Hi-Cap Loops, UNE Transport, Interconnection Trunks, Shared/Common Transport, Databases, Operator Services/Directory Assistance, Collocation
South Carolina		
SC Code of Regulations	Ch 103-622.2	DSO UNE Loops, Resale Voice Services, Resale Data Services (e.g., Synchronet)
Access Services Tariff	E2.4.1 B.3	Hi-Cap Loops, UNE Transport, Interconnection Trunks, Shared/Common Transport, Databases, Operator Services/Directory Assistance, Collocation
Tennessee		
General Subscriber Services Tariff	A2.4.3 C.1. & 2.	DSO UNE Loops, Resale Voice Services, Resale Data Services (e.g., Synchronet)
Access Services Tariff	E2.4.1 B.3	Hi-Cap Loops, UNE Transport, Interconnection Trunks, Shared/Common Transport, Databases, Operator Services/Directory Assistance, Collocation

BELLSOUTH
Interconnection Services

Credit Profile

Return by Fax to: 404-986-0166

Complete, sign and fax to: 404-986-0166 Attention: Business Credit Management	Estimated Monthly billing with BellSouth $_____
For questions concerning this application call 888-634-4114	New customer ☐ Existing customer ☐
Please Print And Complete All Information.	Attach Copy of Fiscal Audited Statement (if available)

Type of Business Applying For:
☐ Local (Resale) ☐ Facility Based ☐ Payphone Services Provider (# of lines in the first 6 months) _____
☐ Access ☐ CMRS (Wireless) ☐ Other_____

Company Information

Business Name (Legal Name)	Doing Business As (Trade Style)		
Please Check One: ☐ Corporation ☐ Partnership ☐ Sole-Proprietor ☐ Other _____			
Street Address	City	State	Zip
Corporate Office Location (If different from above)	City	State	Zip
(Area Code) Telephone Number	(Area Code) Fax Number	E mail address of business	
Are you presently a Bellsouth Customer in another area of business?		☐ Yes	☐ No
Contact name for additional information (if needed)	Contact e mail address:		

Officer's Names and e mail address

President	CFO	CEO

Company History

Year Business Established	Principal Business of Firm	Company Web Site:

Business Credit References

Company Name	City	State	(Area Code) Telephone Number
Account Number	Contact Name		
Company Name	City	State	(Area Code) Telephone Number
Account Number	Contact Name		
Company Name	City	State	(Area Code) Telephone Number
Account Number	Contact Name		

Bank Reference

Bank Name	City	State	Account Number
Banking Officer	(Area Code) Telephone Number	(Area Code) Fax Number	

I hereby authorize you to release to BellSouth now or in the future any and all information, which they may request concerning my account. I understand that such information will be held strictly confidential and will remain BellSouth's property whether or not credit is extended. I understand that security may be required by BellSouth to establish service. I certify that the above information provided for this credit profile is true and correct to the best of my knowledge.

Signature (Authorized Individual Only)	**Print Name**	**Date (MM/DD/YYYY)**

ATTACHMENT 8

RIGHTS-OF-WAY, CONDUITS AND POLE ATTACHMENTS

Rights-of-Way, Conduits and Pole Attachments

BellSouth will provide nondiscriminatory access to any pole, duct, conduit, or right-of-way owned or controlled by BellSouth pursuant to 47 U.S.C. § 224, as amended by the Act, pursuant to terms and conditions of a license agreement subsequently negotiated with BellSouth's Competitive Structure Provisioning Center.

TABLE OF CONTENTS

SECTION		PAGE
1	Definitions	4
2	Scope of Agreement	6
3	Requirements and Specifications	9
4	Additional Legal Requirements	14
5	Facilities and Licenses	14
6	Make-Ready Work	16
7	Application Forms and Fees	16
8	Processing of Applications	19
9	Issuance of Licenses	19
10	Construction of Licensee's Facilities	20
11	Use and Routine Maintenance of Licensee's Facilities	22
12	Modification and Replacement of Licensee's Facilities	22
13	Rearrangement of Facilities at Request of Another	23
14	Emergency Repairs and Pole Replacements	24
15	Inspection by BellSouth of Licensee's Facilities	24
16	Notice of Noncompliance	24
17	Unauthorized Occupancy or Utilization of BellSouth's Facilities	25
18	Removal of Licensee's Facilities	26
19	Fees, Charges, and Billing	26

EXHIBITS

Exhibit 1	BellSouth Records Maintenance Centers	27
Exhibit 2	BellSouth Administrative Forms and Notices	28
Exhibit 3	2004 FCC Formula Supported Fees	29

ATTACHMENT 8
RIGHTS OF WAY (ROW), CONDUITS, POLE ATTACHMENTS

This Attachment 8, together with the terms and conditions contained in General Terms and Conditions, and Attachment 4, sets forth the terms and conditions under which BellSouth shall afford to MCI access to BellSouth's poles, ducts, conduits and rights-of-way pursuant to the Act and FCC rules and regulations.

1. DEFINITIONS

Definitions in General. Except as the context otherwise requires, the terms defined in this Attachment shall, as used in this Attachment, have the meanings set forth in Sections 1.1 through 1.27, below.

1.1 Anchor. The term "anchor" refers to a device, structure, or assembly, which stabilizes a pole and holds it in place. An anchor assembly may consist of a rod and fixed object or plate, typically embedded in the ground, which is attached to a guy strand or guy wire, which, in turn, is attached to the pole. The term "anchor" includes only those anchors which are owned by BellSouth, as distinguished from anchors which are owned and controlled by other persons or entities, and does not include the guy strand, which connects the anchor to the pole.

1.2 Anchor/guy strand. The term "anchor/guy strand" refers to supporting wires, typically stranded together, or other devices attached to a pole and connecting that pole to an anchor or to another pole for the purpose of increasing pole stability. The term "anchor/guy strand" includes, but is not limited to, strands sometimes referred to as "anchor strands," "down guys," "guy strands," and "pole-to-pole guys."

1.3 Application. The process of requesting information related to records, pole and/or conduit availability, or make-ready requirements for BellSouth owned or controlled facilities. Each application is limited in size to a request for a maximum of (1) 100 consecutive poles or (2) 10 consecutive manhole sections or 5000 feet, whichever is greater. The application includes (but not limited to) request for records, records investigation and/or field investigation, and make-ready work.

1.4 Assigned. The term "assigned", when used with respect to conduit or duct space or pole attachment space, refers to any space in such conduit or duct or on such pole that is occupied by a telecommunications service provider or a municipal or other governmental authority, or is assigned pursuant to Section 5.6 herein. To ensure the judicious use of poles and conduits, space "assigned" to a telecommunications service provider must be physically occupied by the service provider, be it BellSouth or a new entrant, within twelve (12) months of the space being "assigned".

1.5 Available. The term "available", when used with respect to conduit or duct space or pole attachment space, refers to any usable space in such conduit or duct or on such pole not assigned to a specific provider at the applicable time.

1.6 Conduit occupancy. The terms "conduit occupancy" and "occupancy" refer to the presence of wire, cable, optical conductors, or other facilities within any portion of BellSouth's conduit system.

1.7 Conduit system. The term "conduit system" refers to any combination of ducts, conduits, manholes, and handholes, and other rights-of-way joined to form an integrated whole. In this Attachment, the term refers to conduit systems owned or controlled by BellSouth.

1.8 Cost. The term "cost" as used herein refers to charges made by BellSouth to MCI for specific work performed, and shall be (a) the actual charges made by subcontractors to BellSouth for work and/or, (b) if the work was performed by BellSouth employees, time and material charges shall apply for such work, or (c) if the work is done by approved contractors hired by MCI, the actual charges made by

such contractors to MCI.

1.9 Duct. The term "duct" refers to a single enclosed tube, pipe, or channel for enclosing and carrying cables, wires, and other facilities. As used in this Attachment, the term "duct" includes "inner-ducts" created by subdividing a duct into smaller channels.

1.10 Facilities. The terms "facility" and "facilities" refer to any property or equipment utilized in the provision of telecommunication services.

1.11 Inner-Duct. The term “inner-duct” refers to a pathway created by subdividing a duct into smaller channels.

1.12 Joint User. The term “joint user” refers to a utility which has entered into an agreement with BellSouth providing reciprocal rights of attachment of facilities owned by each party to the poles, ducts, conduits and rights-of-way owned by the other party.

1.13 Lashing. The term "lashing" refers to the attachment of a licensee’s sheath or inner-duct to a supporting strand.

1.14 License. The term "license" refers to any license issued pursuant to this Agreement and may, if the context requires, refer to conduit occupancy or pole attachment licenses issued by BellSouth prior to the date of this Agreement.

1.15 Licensee. The term “licensee” refers to MCI, where MCI has entered into an agreement or arrangement with BellSouth permitting MCI to place its facilities in BellSouth's conduit system or attach its facilities to BellSouth's poles or anchors. Licensee and MCI may be used interchangeably throughout this Attachment.

1.16 Make-Ready Work. The term "make-ready work" refers to all work performed or to be performed to prepare BellSouth's conduit systems, poles or anchors and related facilities for the requested occupancy or attachment of MCI's facilities. "Make-Ready work" includes, but is not limited to, clearing obstructions (e.g., by "rodding" ducts to ensure clear passage), the rearrangement, transfer, replacement, and removal of existing facilities on a pole or in a conduit system where such work is required solely to accommodate MCI's facilities and not to meet BellSouth's business needs or convenience. "Make-Ready work" may require "dig-ups" of existing facilities and may include the repair, enlargement or modification of BellSouth's facilities (including, but not limited to, conduits, ducts, handholes and manholes) or the performance of other work required to make a pole, anchor, conduit or duct usable for the initial placement of MCI’s facilities.

1.17 Manhole/Handhole. The term "manhole" refers to an enclosure, usually below ground level and entered through a hole on the surface covered with a cast iron or concrete manhole cover, which personnel may enter and use for the purpose of installing, operating, and maintaining facilities in a conduit. The term “handhole” refers to a similar enclosure which is too small for personnel to enter.

1.18 Occupancy. The term “occupancy” shall refer to the physical presence of telecommunication facilities in a duct, on a pole, or within a right-of-way.

1.19 Person acting on MCI's behalf. The terms "person acting on MCI's behalf," "personnel performing work on MCI's behalf," and similar terms include both natural persons and firms and ventures of every type, including, but not limited to, corporations, partnerships, limited liability companies, sole proprietorships, and joint ventures. The terms "person acting on MCI's behalf," "personnel performing work on MCI's behalf," and similar terms specifically include, but are not limited to, MCI, its officers, directors, employees, agents, representatives, attorneys, contractors, subcontractors, and other persons or entities performing services at the request of or as directed by MCI and their respective officers, directors, employees, agents, and representatives.

1.20 Person acting on BellSouth's behalf. The terms "person acting on BellSouth's behalf," "personnel performing work on BellSouth's behalf," and similar terms include both natural persons and firms and ventures of every type, including, but not limited to, corporations, partnerships, limited liability

companies, sole proprietorships, and joint ventures. The terms "person acting on BellSouth's behalf," "personnel performing work on BellSouth's behalf," and similar terms specifically include, but are not limited to, BellSouth, its officers, directors, employees, agents, representatives, attorneys, contractors, subcontractors, and other persons or entities performing services at the request or on behalf of BellSouth and their respective officers, directors, employees, agents, and representatives.

1.21 Pole. The term "pole" refers to both utility poles and anchors but only to those utility poles and anchors owned or controlled by BellSouth, and does not include utility poles or anchors with respect to which BellSouth has no legal authority to permit attachments by other persons or entities.

1.22 Prelicense survey. The term "prelicense survey" refers to all work and activities performed or to be performed to determine whether there is adequate capacity on a pole or in a conduit or conduit system (including manholes and handholes) to accommodate MCI's facilities and to determine what make-ready work, if any, is required to prepare the pole, conduit or conduit system to accommodate MCI's facilities.

1.23 Right-of-Way (ROW). The term “right-of-way” refers to the right to use the land or other property of BellSouth to place poles, conduits, cables, other structures and equipment, or to provide passage to access such structures and equipment. A Right-of-Way may run under, on, above, across, along or through public or private property or enter multi-unit buildings (including air space above public or private property) and may include the right to use BellSouth-owned or controlled building entrance facilities, building entrance links, equipment rooms, telephone closets, and/or building risers.

1.24 Sheath. The term “sheath” refers to a single outer covering containing communications wires, fibers, or other communications media.

1.25 Spare Capacity. The term "spare capacity" refers to any pole attachment space, conduit, duct or inner-duct not currently assigned or subject to a pending application for attachment/occupancy. Spare capacity does not include an inner-duct (not to exceed one (1) inner-duct per party) reserved by BellSouth, MCI, or a third party for maintenance, repair, or emergency restoration.

1.26 State. When capitalized, the term "State" (as used in terms such as "this State") refers to the State, for which this Agreement applies.

1.27 Third Party. The terms "third party" and "third parties" refer to persons and entities other than MCI and BellSouth. Use of the term "third party" does not signify that any such person or entity is a party to this Agreement or has any contractual rights hereunder.

2. REQUIREMENTS / SCOPE OF AGREEMENT

2.1 Scope of Attachment. BellSouth shall provide MCI with equal and nondiscriminatory access to pole space, conduits, ducts, and rights-of-way on terms and conditions equal to those provided by BellSouth to itself or to any other telecommunications service provider. Further, BellSouth shall not withhold or delay assignment of such facilities to MCI because of the potential or forecasted needs of itself, its Affiliates or other parties.

2.2 Attachments and Occupancies Authorized by this Attachment. BellSouth shall issue one (1) or more licenses to MCI authorizing MCI to attach facilities to BellSouth's owned or controlled poles and to place facilities within BellSouth's owned or controlled conduits, ducts or rights-of-way under the terms and conditions set forth in this Attachment, the Act and FCC rules and regulations.

2.2.1 Unless otherwise provided herein, authority to attach facilities to BellSouth's owned or controlled poles or to place facilities within BellSouth's owned or controlled conduits, ducts or rights-of-way shall be granted only in individual licenses granted under this Attachment and the placement or use of such facilities shall be determined in accordance with such licenses and procedures established in this Attachment.

2.2.2 MCI agrees that its attachment of facilities to BellSouth's owned or controlled poles or occupancy of

BellSouth's owned or controlled conduits, ducts or rights-of-way shall take place pursuant to the licensing procedures set forth herein, and BellSouth agrees that it shall not unreasonably withhold or delay issuance of such licenses.

2.2.3 MCI may not sublease or otherwise authorize any Third Party to use any part of the BellSouth Facilities licensed to MCI under this Attachment, except that MCI may lease its own Facilities to Third Parties, or allow affiliates to overlash cables to MCI cables. Notwithstanding the above, upon notice to BellSouth, MCI may permit Third Parties who have an agreement with BellSouth to overlash to existing MCI attachments in accordance with the terms and conditions of such Third Party's agreement with BellSouth, and MCI may lease dark fiber to a Third Party

2.3 Licenses. Subject to the terms and conditions set forth in this Attachment, BellSouth shall issue to MCI one (1) or more licenses authorizing MCI to place or attach facilities in or to specified poles, conduits, ducts or rights-of-way owned or controlled by BellSouth located within this State on a first come, first served basis. BellSouth may deny a license application if BellSouth determines that the pole, conduit or duct space specifically requested by MCI is necessary to meet BellSouth's present needs, or is licensed by BellSouth to another licensee, or is otherwise unavailable based on engineering concerns. BellSouth shall provide written notice to MCI within a reasonable time, not to exceed forty-five (45) calendar days, specifying in detail the reasons for denying MCI's request. BellSouth shall have the right to designate the particular duct(s) to be occupied, the location and manner in which MCI's facilities will enter and exit BellSouth's conduit system and the specific location and manner of installation for any associated equipment which is permitted by BellSouth to occupy the conduit system. Assignment of space on poles, in conduits or ducts and within rights-of-way will be granted by BellSouth on an equal basis to BellSouth, MCI and other telecommunication service providers

2.4 Access and Use of Rights-of-Way. BellSouth acknowledges that it is required by the Act and FCC rules and regulations to afford MCI access to and use of all associated rights-of-way to any sites where BellSouth's owned or controlled poles, manholes, conduits, ducts or other parts of BellSouth's owned or controlled conduit systems are located and any other BellSouth owned or controlled rights-of-way.

2.4.1 BellSouth shall provide MCI with access to and use of such rights-of-way to the same extent and for the same purposes that BellSouth may access or use such rights-of-way, including, but not limited to, access for ingress, egress or other access and to construct, utilize, maintain, modify, and remove facilities for which pole attachment, conduit occupancy, or right-of-way use licenses have been issued, provided that any agreement with a third party under which BellSouth holds such rights expressly or impliedly grants BellSouth the right to provide such rights to others.

2.4.2 Where BellSouth notifies MCI that a BellSouth agreement with a third party does not expressly or impliedly grant BellSouth the ability to provide such access and use rights to others, then, upon MCI's request, BellSouth will use its best efforts to obtain the owner's consent and to otherwise secure such rights for MCI. MCI agrees to reimburse BellSouth for the reasonable and demonstrable costs incurred by BellSouth in obtaining such rights for MCI.

2.4.3 In cases where a third party agreement does not grant BellSouth the right to provide access and use rights to others as contemplated in this Section 2 and BellSouth, despite its best efforts, is unable to secure such access and use rights for MCI in accordance with Section 2.4.2 herein, or, in the case where MCI elects not to invoke its rights under Sections 2.4.1 or 2.4.2 herein, MCI shall be responsible for obtaining such permission to access and use such rights-of-way. BellSouth shall cooperate with MCI in obtaining such permission and shall not prevent or delay any third party assignment of rights-of-way to MCI.

2.4.4 Where BellSouth has any ownership or rights-of-way to buildings or building complexes or within buildings or building complexes, BellSouth shall offer to MCI through a license or other agreement:

2.4.4.1 The right to use any available space owned or controlled by BellSouth in the building or building

complex to install MCI equipment and facilities; and

2.4.4.2 Ingress and egress to such space.

Except to the extent required to meet the requirements of the Act and FCC rules and regulations, neither this Attachment nor any license granted hereunder shall constitute a conveyance or assignment of any of either Party's rights to use any public or private rights-of-way, and nothing contained in this Attachment or in any license granted hereunder shall be construed as conferring on one (1) Party any right to interfere with the other Party's access to any such public or private rights-of-way.

2.5 No Effect on BellSouth's Right to Convey Property. Nothing contained in this Attachment or in any license issued hereunder shall in any way affect the right of BellSouth to convey to any other person or entity any interest in real or personal property, including any poles, conduit or ducts to or in which MCI has attached or placed facilities pursuant to licenses issued under this Section provided however that BellSouth shall give MCI reasonable advance written notice of such intent to convey.

2.6 No Effect on BellSouth's Rights to Manage its Own Facilities. This Attachment shall not be construed as limiting or interfering with BellSouth's rights set forth below, except to the extent expressly provided by the provisions of this Attachment or licenses issued hereunder or under the Act or other applicable laws, rules or regulations:

2.6.1 To locate, relocate, move, replace, modify, maintain, and operate BellSouth's own facilities within BellSouth's conduits, ducts or rights-of way or any of BellSouth's facilities attached to BellSouth's poles at any time and in any reasonable manner which BellSouth deems appropriate to serve its customers, avail itself of new business opportunities, or otherwise meet its business needs; or

2.6.2 To enter into new agreements or arrangements with other persons or entities permitting them to attach or place their facilities to or in BellSouth's poles, conduits or ducts; provided, however, that such relocations, moves, replacements, modifications, maintenance and operations or new agreements or arrangements shall not substantially interfere with MCI's pole attachment, conduit occupancy or right-of-way use or rights provided by licenses issued pursuant to this Attachment.

2.7 No Effect on MCI's Rights to Manage its Own Facilities. This Attachment shall not be construed as limiting or interfering with MCI's rights set forth below, except to the extent expressly provided by the provisions of this Attachment or licenses issued hereunder or under the Act or other applicable laws, rules or regulations:

2.7.1 To locate, relocate, move, replace, modify, maintain, and operate its own facilities within BellSouth's conduits, ducts or rights-of-way or its facilities attached to BellSouth's poles at any time and in any reasonable manner which MCI deems appropriate to serve its customers, avail itself of new business opportunities, or otherwise meet its business needs; or

2.7.2 To enter into new agreements or arrangements with other persons or entities permitting MCI to attach or place its facilities to or in such other persons' or entities' poles, conduits or ducts, or rights-of-way; provided, however, that such relocations, moves, replacements, modifications, maintenance and operations or new agreements or arrangements shall not conflict with MCI's obligations under this Attachment.

2.8 No Right to Interfere with Facilities of Others. The provisions of this Attachment or any license issued hereunder shall not be construed as authorizing either Party to this Attachment to rearrange or interfere in any way with any of the other Party's facilities, with the facilities of other persons or entities, or with the use of or access to such facilities by such other Party or such other persons or entities, except to the extent expressly provided by the provisions of this Attachment or any license issued hereunder or under the Act or other applicable laws, rules or regulations.

2.8.1 MCI acknowledges that the facilities of persons or entities other than BellSouth and MCI may be attached to or occupy BellSouth's poles, conduits, ducts and rights-of-way.

2.8.2 BellSouth shall not attach, or give permission to any third parties to attach facilities to, existing MCI facilities without MCI's prior written consent. If BellSouth becomes aware of any such unauthorized attachment to MCI facilities, BellSouth shall use its best efforts to rectify the situation immediately.

2.8.3 With respect to facilities occupied by MCI or the subject of an application for attachment by MCI, BellSouth will give to MCI at least sixty (60) calendar days' written notice for conduit extensions or reinforcements, at least sixty (60) calendar days' written notice for pole line extensions, at least sixty (60) calendar days' written notice for pole replacements, and at least sixty (60) calendar days' written notice of BellSouth's intention to construct, reconstruct, expand or place such facilities or of BellSouth's intention not to maintain or use any existing facility. Where BellSouth elects to abandon or remove BellSouth facilities, the facilities will be offered to existing occupants on a first-in, first-right to maintain basis. The party first electing to exercise this option will be required to execute the appropriate agreement with BellSouth to transfer (purchase agreement) ownership from BellSouth to new party, subject to then-existing licenses pertaining to such facilities. If no party elects to maintain such facilities, all parties will be required to move their existing facilities within ninety (90) calendar days. If an emergency or provision of an applicable joint use agreement requires BellSouth to construct, reconstruct, expand or replace poles, conduits or ducts occupied by MCI or the subject of an application for attachment by MCI, BellSouth will notify MCI as soon as reasonably practicable of such proposed construction, reconstruction, expansion or replacement to enable MCI, if it so desires, to request that a pole, conduit or duct of greater height or capacity be utilized to accommodate an anticipated facility need of MCI.

2.8.3.1 Whenever BellSouth intends to modify or alter any poles, ducts, conduits or rights-of-way which contain MCI's facilities, BellSouth shall provide at least sixty (60) calendar days' advance written notification to MCI of such action so that MCI may have a reasonable opportunity to add to or modify MCI's facilities. If MCI adds to or modifies MCI's facilities according to this Section, MCI shall bear a proportionate share of the costs incurred by BellSouth in making such facilities accessible.

2.8.4 Retired Cable. At MCI's expense, BellSouth shall remove any retired cable from conduit systems or pole systems to allow for the efficient use of conduit space or pole space within a reasonable period of time. BellSouth retains salvage rights on any cable removed. In order to safeguard its structures and facilities, BellSouth reserves the right to remove retired cables and is under no obligation to allow MCI the right to remove such cables. Based on sound engineering judgment, there may be situations where it would neither be feasible nor practical to remove retired cables.

3. REQUIREMENTS AND SPECIFICATIONS

3.1 Published Standards Incorporated in this Attachment by Reference. MCI agrees that its facilities shall be placed, constructed, maintained, repaired, and removed in accordance with current (as of the date when such work is performed) editions of the following publications**,** each of which is incorporated by reference as part of this Attachment:

3.1.1 The Blue Book Manual of Construction Procedures, Special Report SR-TAP-001421, published by Bell Communications Research, Inc. ("Bellcore"), and sometimes referred to as the "Blue Book";

3.1.2 The National Electrical Code ("NEC"); and

3.1.3 The National Electrical Safety Code ("NESC").

3.2 Changes in Published Standards. MCI agrees to rearrange its facilities in accordance with changes in the standards published in the publications specified in Section 3 of this Attachment if required by law to do so or upon the mutual agreement of the Parties.

3.3 Additional Electrical Design Specifications. MCI agrees that, in addition to specifications and requirements referred to in Section 3.1 above, MCI's facilities placed in BellSouth's conduit system shall meet all of the following electrical design specifications:

3.3.1 No facility shall be placed in BellSouth's conduit system in violation of FCC rules and regulations.

3.3.2 MCI's facilities placed in BellSouth's conduit system shall not be designed to use the earth as the sole conductor for any part of MCI's circuits.

3.3.3 MCI's facilities carrying more than fifty (50) volts AC (rms) to ground or 135 volts DC to ground shall be enclosed in an effectively grounded sheath or shield.

3.3.4 No coaxial cable of MCI shall occupy a conduit system containing BellSouth's cable unless such cable of MCI meets the voltage limitations of Article 820 of the National Electrical Code.

3.3.5 MCI's coaxial cable may carry continuous DC voltages up to 1800 volts to ground where the conductor current will not exceed one-half amperes and where such cable has two (2) separate grounded metal sheaths or shields and a suitable insulating jacket over the outer sheath or shield. The power supply shall be so designed and maintained that the total current carried over the outer sheath shall not exceed 200 micro amperes under normal conditions. Conditions which would increase the current over this level shall be cleared promptly.

3.3.6 Neither Party shall circumvent the other Party's corrosion mitigation measures. Each Party's new facilities shall be compatible with the other Party's facilities so as not to damage any facilities of the other Party by corrosion or other chemical reaction.

3.4 Additional Physical Design Specifications. MCI's facilities placed in BellSouth's conduit system must meet all of the following physical design specifications:

3.4.1 Cables bound or wrapped with cloth or having any kind of fibrous coverings or impregnated with an adhesive material shall not be placed in BellSouth's conduit or ducts.

3.4.2 The integrity of BellSouth's conduit system and overall safety of BellSouth's personnel and other personnel working in BellSouth's conduit system requires that "dielectric cable" be required when MCI's cable facility utilizes an alternative duct or route that is shared in the same trench by any current carrying facility of a power utility.

3.4.3 New construction splices in MCI's fiber optic and twisted pair cables shall be located in manholes, pull boxes or handholes.

3.5 Additional Specifications Applicable to Connections. The following specifications apply to connections of MCI's conduit to BellSouth's conduit system:

3.5.1 MCI will be permitted to connect its conduit or duct only at the point of a BellSouth manhole. No attachment will be made by entering or breaking into conduit between manholes. All necessary work to install MCI facilities will be performed by MCI or its contractor at MCI’s expense. In no event shall MCI or its contractor “core bore” or make any other modification to BellSouth manhole(s) without the prior written approval of BellSouth, which approval will not be unreasonably delayed or withheld.

3.5.2 BellSouth may monitor, at MCI’s expense, the entrance and exit of MCI's facilities into BellSouth's manholes and the placement of MCI's facilities in BellSouth's manholes.

3.5.3 If MCI constructs or utilizes a duct connected to BellSouth's manhole, the duct and all connections between that duct and BellSouth's manhole shall be sealed, to the extent practicable, to prevent the entry of gases or liquids into BellSouth's conduit system. If MCI's duct enters a building, it shall also be sealed where it enters the building and at all other locations necessary to prevent the entry of gases and liquids from the building into BellSouth's conduit system.

3.6 Requirements Relating to Personnel, Equipment, Material, and Construction Procedures Generally. Duct clearing, rodding or modifications required to grant MCI access to BellSouth's conduit systems may be performed by BellSouth at MCI's expense at charges which represent BellSouth's actual costs. Alternatively, at MCI’s option, such work may be performed by MCI or a contractor provided that the entity performing the work demonstrates compliance with BellSouth certification requirements,

which certification requirements shall be consistent with FCC rules and regulations. The Parties acknowledge that MCI, its contractors, and other persons acting on MCI's behalf will perform work for MCI (e.g., splicing MCI's facilities) within BellSouth's conduit system. MCI represents and warrants that neither MCI nor any person acting on MCI's behalf shall permit any person to climb or work on or in any of BellSouth's poles or to enter BellSouth's manholes or work within BellSouth's conduit system unless such person has the training, skill, and experience required to recognize potentially dangerous conditions relating to pole or the conduit systems and to perform the work safely.

3.6.1 MCI's facilities within BellSouth's conduit system shall be constructed, placed, rearranged, modified, and removed upon receipt of a license specified in Section 5 herein. However, no such license will be required for the inspection, maintenance, repair or non-physical modifications of MCI's facilities.

3.6.2 "Rodding" or clearing of ducts in BellSouth's conduit system shall be done only when specific authorization for such work has been obtained in advance from BellSouth, which authorization shall not be unreasonably delayed or withheld. The Parties agree that such rodding or clearing shall be performed according to existing industry standards and practices. MCI may perform such work itself or may contract with BellSouth for performance of such work or, at MCI's option, with a contractor provided that the entity performing the work demonstrates compliance with BellSouth certification requirements which certification requirements shall be consistent with FCC rules and regulations.

3.6.3 Personnel performing work on BellSouth's or MCI's behalf in BellSouth's conduit system shall not climb on, step on, or otherwise disturb the other Party's or any third party's cables, air pipes, equipment, or other facilities located in any manhole or other part of BellSouth's conduit system.

3.6.4 Personnel performing work on BellSouth's or MCI's behalf within BellSouth's conduit system, including any manhole, shall, upon completing their work, make reasonable efforts to remove all tools, unused materials, wire clippings, cable sheathing and other materials brought by them to the work site.

3.6.5 All of MCI's facilities shall be firmly secured and supported in accordance with Bellcore and industry standards.

3.6.6 Identification of Facilities in Conduit/Manholes. MCI's facilities shall be plainly identified with MCI's name in each manhole with a firmly affixed permanent tag that meets standards set by BellSouth for its own facilities.

3.6.6.1 Identification of Pole Attachments. MCI's facilities attached to BellSouth poles shall be plainly identified with MCI's name firmly affixed at each pole by a permanent tag that meets industry standards.

3.6.7 Manhole pumping and purging required in order to allow MCI's work operations to proceed shall be performed by MCI or its contractor in compliance with the requirements of Exhibit A to Attachment 4, and with all regulations and standards established by the United States Environmental Protection Agency and by any applicable state or local environmental regulators. Exhibit A of Attachment 4 will be changed as required by changes in Applicable Law, or by mutual agreement of the Parties. Either Party desiring to make other changes to Exhibit A of Attachment 4 may invoke the dispute resolution procedures of the General Terms and Conditions of this Agreement if the Parties are not able to agree on such changes. BellSouth may not use its own practices as a method of applying rules to MCI which are more onerous than those which it applies to itself. BellSouth remains bound by its obligations as an incumbent LEC under applicable federal and State law.

3.6.8 Planks or other types of platforms shall not be installed using cables, pipes or other equipment as a means of support. Platforms shall be supported only by cable racks.

3.6.9 Any leak detection liquid or device used by MCI or personnel performing work on MCI's facilities within BellSouth's conduit system shall be of a type approved by BellSouth or Bellcore.

3.6.10 When MCI or personnel performing work on MCI's behalf are working within or in the vicinity of any part of BellSouth's poles or conduit system which is located within, under, over, or adjacent to

streets, highways, alleys or other traveled rights-of-way, MCI and all personnel performing work on MCI's behalf shall follow procedures which MCI deems appropriate for the protection of persons and property. MCI shall be responsible, at all times, for determining and implementing the specific steps required to protect persons and property at the site. MCI will provide all traffic control and warning devices required to protect pedestrian and vehicular traffic, workers and property from danger. MCI has sole responsibility for the safety of all personnel performing work on MCI's behalf, for the safety of bystanders, and for insuring that all operations conform to current OSHA regulations and all other governmental rules, ordinances or statutes. BellSouth reserves the right to suspend MCI's activities on, in or in the immediate vicinity of BellSouth's poles or conduit system if, in BellSouth's reasonable judgment, any hazardous condition arises due to the activity (including both acts and omissions) of MCI or any personnel performing work on MCI's behalf, which suspension shall cease when the condition has been rectified.

3.6.11 Except for protective screens, no temporary cover shall be placed by MCI or personnel performing work on MCI's behalf over an open manhole unless it is at least four feet (4') above the surface level of the manhole opening.

3.6.12 Smoking or the use of any open flame is prohibited in BellSouth's manholes, in any other portion of BellSouth's conduit system, or within ten feet (10') of any open manhole entrance; provided that this provision will not prohibit the use of spark producing tools such as electric drills, fusion splicers, etc.

3.6.13 Artificial lighting, when required, will be provided by MCI. Only explosion-proof lighting fixtures shall be used.

3.6.14 Neither MCI nor personnel performing work on MCI's behalf shall allow any combustible gas, vapor, liquid, or material to accumulate in BellSouth's conduit system, including any manhole, during work operations performed within or in the vicinity of BellSouth's conduit system.

3.6.15 MCI will abide by any laws, regulations or ordinances regarding the use of spark producing tools, equipment or devices in BellSouth's manholes, in any other portions of BellSouth's conduit system, or within ten feet (10') of any open manhole opening. This includes, but is not limited to, such tools as electric drills and hammers, meggers, breakdown sets, and induction sets.

3.7 Opening of Manholes. The following requirements apply to the opening of BellSouth's manholes and the authority of BellSouth personnel present when work on MCI's behalf is being performed within or in the vicinity of BellSouth's conduit system.

3.7.1 BellSouth's manholes shall be opened only as permitted by BellSouth's authorized employees or agents, which permission shall not be unreasonably denied or delayed.

3.7.2 MCI shall notify BellSouth forty-eight (48) hours in advance of any routine work operation requiring entry into any of BellSouth’s manholes.

3.7.3 MCI shall be responsible for obtaining any necessary authorization from appropriate authorities to open manholes for conduit work operations therein.

3.7.4 BellSouth's authorized employee or agent shall not direct or control the conduct of MCI's work at the work site. The presence of BellSouth's authorized employee or agent at the work site shall not relieve MCI or personnel performing work on MCI's behalf of their responsibility to conduct all work operations within BellSouth's conduit system in a safe and workmanlike manner.

3.7.5 Although BellSouth's authorized employee or agent shall not direct or control the conduct of MCI's work at the work site, BellSouth's employee or agent shall have the authority to suspend MCI's work operations within BellSouth's conduit system if, in the reasonable discretion of such BellSouth employee or agent, it appears that any hazardous conditions arise or any unsafe practices are being followed by MCI or personnel performing work on MCI's behalf.

3.8 OSHA Compliance: Notice to BellSouth of Unsafe Conditions. MCI agrees that:

3.8.1 Its facilities shall be constructed, placed, maintained, repaired, and removed in accordance with the

Occupational Safety and Health Act ("OSHA") and all rules and regulations promulgated thereunder;

3.8.2 All persons acting on MCI's behalf, including, but not limited to, MCI's employees, agents, contractors, and subcontractors shall, when working on or within BellSouth's poles or conduit system, comply with OSHA and all rules and regulations thereunder;

3.8.3 MCI shall establish appropriate procedures and controls to assure compliance with all requirements of this Attachment; and

3.8.4 MCI, and any person acting on MCI's behalf, may report unsafe conditions on, in or in the vicinity of BellSouth's poles or conduit system to BellSouth.

3.9 Compliance with Environmental Laws and Regulations. MCI acknowledges that, from time to time, environmental contaminants may enter BellSouth's conduit system and accumulate in manholes or other conduit facilities and that certain conduits (Transite) are constructed with asbestos-containing materials. If BellSouth has knowledge of the presence of such contaminants in a conduit for which MCI has applied for or holds a license, BellSouth will promptly notify MCI of such fact. In addition, upon request by MCI, BellSouth shall provide MCI with information pertaining to any environmental inspections it has performed on rights-of-way, conduits, and pole attachments for which MCI has applied for or holds a license. Notwithstanding any of BellSouth's notification requirements in this Attachment, MCI acknowledges that some of BellSouth's conduit may be fabricated from asbestos-containing materials. Such conduit is generally marked with a designation of "C Fiber Cement Conduit," "Transite," or "Johns-Manville." Unless sampling or manufacturer's certification proves otherwise, MCI will presume that all conduit not fabricated of plastic, tile, or wood is asbestos-containing and will handle it pursuant to all applicable regulations relating to worker safety and protection of the environment. BellSouth makes no representations to MCI or personnel performing work on MCI's behalf that BellSouth's conduit system or any specific portions thereof will be free from environmental contaminants at any particular time. The acknowledgments and representations set forth in the two (2) preceding sentences are not intended to relieve BellSouth of any liability which it would otherwise have under applicable law for the presence of environmental contaminants in its conduit facilities. MCI agrees to comply with the following provisions relating to compliance with environmental laws and regulations:

3.9.1 MCI's facilities shall be constructed, placed, maintained, repaired, and removed in accordance with all applicable federal, State, and local environmental statutes, ordinances, rules, regulations, and other laws, including, but not limited to, the Resource Conservation and Recovery Act (42 U.S.C. §§9601 et seq.), the Toxic Substance Control Act (15 U.S.C. §§2601-2629), the Clean Water Act (33 U.S.C. §§1251 et seq.), and the Safe Drinking Water Act (42 U.S.C. §§300f-300j).

3.9.2 All persons acting on MCI's behalf, including, but not limited to, MCI's employees, agents, contractors, and subcontractors, shall, when working on, within or in the vicinity of BellSouth's poles or conduit system, comply with all applicable federal, State, and local environmental laws, including, but not limited to, all environmental statutes, ordinances, rules, and regulations.

3.9.3 MCI shall establish appropriate procedures and controls to assure compliance with all requirements of this Section 3.9.

3.9.4 MCI and all personnel performing work on MCI's behalf shall comply with such standards and practices as BellSouth and MCI may from time to time mutually agree to adopt to comply with environmental laws and regulations. Pursuant to Exhibit A of Attachment 4 , neither MCI nor BellSouth nor personnel performing work on either Party's behalf shall discharge water or any other substance from any BellSouth manhole or other conduit facility onto public or private property, including any storm water drainage system, without first testing such water or substance for contaminants in accordance with mutually agreed standards and practices and determining that such discharge would not violate any environmental law, create any environmental risk or hazard, or damage the property of any person. Proper handling and disposal of any waste material from a BellSouth manhole by MCI or its contractor shall be the responsibility of MCI. No such waste

material shall be deposited on BellSouth premises for storage or disposal. BellSouth may not use its practices as a method of applying rules to MCI which are more onerous than those which it applies to itself. BellSouth remains bound by its obligations as an incumbent LEC under applicable federal and state law.

3.10 Compliance with Other Governmental Requirements. MCI agrees that its facilities attached to BellSouth's facilities shall be constructed, placed, maintained, and removed in accordance with the ordinances, rules, and regulations of any governing body having jurisdiction over the subject matter. MCI shall comply with all applicable statutes, ordinances, rules, regulations and other laws requiring the marking and lighting of aerial wires, cables and other structures to ensure that such wires, cables and structures are not a hazard to aeronautical navigation. MCI shall establish appropriate procedures and controls to assure such compliance.

3.11 Differences in Standards or Specifications. To the extent that there may be differences in any applicable standards or specifications referred to in this Section 3, the most stringent standard or specification shall apply.

3.12 MCI Solely Responsible for the Condition of Its Facilities. MCI shall be responsible at all times for the condition of its facilities and its compliance with the requirements, specifications, rules, regulations, ordinances, and laws specified in this Section 3. In this regard, BellSouth shall have no duty to MCI to inspect or monitor the condition of MCI's facilities (including, but not limited to, splices and other facilities connections) located within BellSouth's conduit and ducts or any attachment of MCI's facilities to BellSouth's poles, anchors, anchor/guy strands or other pole facilities. BellSouth may, however, conduct such inspections and audits of its poles and conduit system as BellSouth determines reasonable or necessary. Such inspection and audits shall be conducted at BellSouth’s expense with the exception of (a) follow-up inspection to confirm remedial action after an observed MCI violation of the requirements of this Attachment; and (b) inspection of MCI facilities in compliance with a specific mandate of appropriate governmental authority for which inspections the cost shall be borne by MCI. Either Party may audit the other Party's compliance with the terms of this Section 3.12. Observed safety hazards or imminent facility failure conditions of any party shall be reported to the affected party where such party can be readily identified.

3.13 Efficient Use of Conduit. BellSouth shall install inner-ducts to increase duct space in existing conduit as facilities permit. The full complement of inner-ducts shall be installed that can be accommodated under sound engineering principles. The number of inner-ducts that can reasonably be installed will be determined by BellSouth, pursuant to sound engineering principles. At MCI’s request, BellSouth shall allow MCI to install the inner-duct.

3.14 Each Party shall exercise precaution to avoid damaging the facilities of the other Party and of others attached to Pole(s), Anchor(s), or occupying a Conduit System and shall make an immediate report to the Owner of the occurrence of any such damage caused by the Party’s employees, agents or contractors.

4. ADDITIONAL LEGAL REQUIREMENTS

4.1 Licenses granted under this Attachment authorize MCI to place facilities in, or attach facilities to, poles, conduits and ducts owned or controlled by BellSouth but do not affect the rights of landowners to control terms and conditions of access to their property.

4.1.1 MCI agrees that neither MCI nor any persons acting on MCI's behalf, including, but not limited to, MCI's employees, agents, contractors, and subcontractors, shall engage in any conduct which damages public or private property in the vicinity of BellSouth's poles or conduit system, interferes in any way with the use or enjoyment of public or private property except as expressly permitted by the owner of such property, or creates a hazard or nuisance on such property, including, but not limited to, a hazard or nuisance resulting from any abandonment or failure to remove MCI's facilities or any

construction debris from the property, failure to erect warning signs or barricades as may be necessary to give notice to others of unsafe conditions on the premises while work performed on MCI's behalf is in progress, or failure to restore the property to a safe condition after such work has been completed.

4.2 Required Permits, Certificates and Licenses. MCI shall be responsible for obtaining any additional building permits or certificates from governmental authorities necessary to construct, operate, maintain and remove its facilities on public or private property.

4.2.1 MCI shall not attach or place its facilities to or in BellSouth's poles, conduit or duct located on any property for which it or BellSouth has not first obtained all required authorizations.

4.2.2 BellSouth shall have the right to request evidence that all appropriate authorizations have been obtained; provided, however, that such request shall not delay BellSouth's prelicense survey work.

4.3 Lawful Purposes. All facilities placed by MCI in BellSouth's conduit and ducts or on BellSouth's poles, anchors or anchor/guy strands must serve a lawful purpose and the uses made of MCI's facilities must comply with all applicable federal, State, and local laws and with all federal, State, and local regulatory rules, regulations, and requirements.

5. FACILITIES AND LICENSES

5.1 Licenses Required. Before placing any facilities in BellSouth's conduits or ducts or attaching any facilities to BellSouth's poles, anchors or anchor/guy strands, MCI must first apply for and receive a written license from BellSouth. BellSouth shall not unreasonably deny or delay issuance of any license and, in any event, BellSouth shall issue such license within twenty (20) business days (a) after the determination has been made that make-ready work is not required, but no later than forty-five (45) calendar days after BellSouth receives the application, which period shall exclude any time BellSouth is awaiting a response from MCI or (b) completion of make-ready work, if make-ready work is needed.

5.2 Provision of Records and Information to MCI. In order to obtain information regarding facilities, MCI shall make a written request to BellSouth, identifying with reasonable specificity the geographic area for which facilities are required, the types and quantities of the required facilities and the required in-service date. In response to such request, BellSouth shall provide MCI with information regarding the types, quantity and location (which may be provided by provision of route maps) and availability of BellSouth poles, conduit and right-of-way located within the geographic area specified by MCI. Provision of information under the terms of this Section 5.2 shall include the right of MCI employees or agents to obtain copies, engineering records or drawings which pertain to those facilities within the geographic area identified in MCI’s request. The costs of producing and mailing copies of records, which are to be paid by MCI, are on an individual case basis. The components which make up the total costs are actual:

1) Vendor costs based on the time spent researching reviewing and copying records.
2) BellSouth employee costs based on the time spent reviewing vendor provided records.
3) Copying costs
4) Shipping costs.

5.3 MCI acknowledges that records and information provided by BellSouth pursuant to this Section may not reflect field conditions and that physical inspection is necessary to verify presence and condition of outside plant facilities and right of way. In providing such records and information, BellSouth will not be liable to MCI or any third party for errors/omissions contained therein, unless such errors/omissions are caused by the gross negligence or willful misconduct of BellSouth or its agents or employees.

5.4 For any information that is readily available, BellSouth shall use its best efforts to produce said information within five (5) business days -for requests to be viewed or picked up at record maintenance centers or twenty (20) business days (if mailed) of the written requests. MCI may elect

to be present at any field based survey of facilities identified pursuant to this paragraph and BellSouth shall provide MCI at least forty-eight (48) hours' notice prior to initiating such field survey. MCI employees or agents shall be permitted to enter BellSouth manholes and inspect such structures to confirm usability and/or evaluate condition of the structure(s) with at least forty-eight (48) hours' notice to BellSouth, with a BellSouth representative present and at MCI's expense.

5.5 Issuance of Licenses When No Make-Ready Work is Required. If BellSouth determines that no make-ready work is required, BellSouth shall approve applications for pole attachment and conduit occupancy licenses and issue such licenses within twenty (20) business days after the determination has been made that no make-ready work is required but in no event later than forty-five (45) calendar days after BellSouth receives the application, which period shall exclude any time BellSouth is awaiting a response from MCI.

5.6 Assignment of Conduit, Duct and Pole Space. Within twenty (20) business days after (a) the determination that make-ready work is not required but no later than forty-five (45) calendar days after BellSouth receives the application, which period shall exclude any time BellSouth is awaiting a response from MCI or (b) after completion of make-ready work, if Make-Ready work is needed, BellSouth shall approve the assignment of space for pole attachment and conduit occupancy. If no make-ready work is required, such assignment shall include a granting of the license. If make-ready work is to be performed by BellSouth, such assignment shall remain in effect until make-ready costs are presented to MCI and approval by MCI pursuant to the time frames herein stated.

5.6.1 If MCI approves BellSouth's make ready costs, MCI shall have twelve (12) months from the date of assignment or sixty (60) calendar days after completion of make-ready work by BellSouth, whichever time is later, to install its facilities. If MCI rejects BellSouth's costs for make-ready work, but then elects to perform the make-ready work itself or through a contractor or if MCI elects from the time of application to perform the make-ready work itself or through a contractor, MCI shall install its facilities within twelve (12) months from the date of assignment. In the event MCI does not install its facilities within the time frames set out in this Section 5.6.1, the assignment shall be void and such space shall become available.

6. MAKE-READY WORK

6.1 If performed by BellSouth, make-ready work to accommodate MCI's facilities shall be included in the normal work load schedule of BellSouth with construction responsibilities in the geographic areas where the relevant poles or conduit systems are located and shall not be entitled to priority, advancement, or preference over other work to be performed by BellSouth in the ordinary course of BellSouth's business.

6.1.1 If MCI desires make-ready work to be performed on an expedited basis and BellSouth agrees to perform the work on such a basis, BellSouth shall recalculate the estimated make-ready charges.

6.2 All charges for make-ready work performed by BellSouth are payable in advance, with the amount of any such advance payment to be due within sixty (60) calendar days after receipt of an invoice from BellSouth. BellSouth shall send all invoices to MCI via U.S. mail at MCI's expense. BellSouth will schedule make-ready work for completion in a nondiscriminatory manner on a first-come first-served basis at parity with BellSouth. BellSouth will begin the process of scheduling make-ready work within twenty (20) business days of receipt of payment from MCI.

6.3 Work Performed by Certified Contractor. In lieu of obtaining performance of make-ready work by BellSouth, MCI at its option may perform the make-ready work itself or arrange for the performance of such work by a contractor. The party performing the work must be certified by BellSouth to work on or in its facilities. Certification shall be granted based upon reasonable and customary criteria employed by BellSouth in the selection of its own contract labor in accordance with FCC rules and regulations. Notwithstanding any other provisions of this Attachment, MCI may not employ a contractor to accomplish make-ready work if BellSouth is likewise precluded from contractor

selection under the terms of an applicable joint use agreement or collective bargaining agreement.

6.4 Completion of make-ready work. BellSouth will issue a license to MCI at the time all make-ready work necessary to MCI's attachment or occupancy has been completed.

7. APPLICATION FORM AND FEES

7.1 Application Form and Fees. To apply for a license under this Attachment, MCI shall submit the appropriate BellSouth administrative form(s), per Exhibit 2, (two (2) sets of each and either a route map specifically indicating MCI desired route or engineered drawings are to be included). MCI has the option of requesting copies of BellSouth records only, requesting a records and/or field survey to determine availability, or requesting a make-ready estimate. Before the Application and Conduit Occupancy License or Application and Pole Attachment License form is approved for the attachment, make ready work must be complete or a records or field survey has determined that make ready work is not required. MCI shall submit with MCI's license application a proposed or estimated construction schedule as set forth below in Section 7.1.2. BellSouth will process license applications in the order in which they are received; provided, however, that when MCI has multiple applications on file with BellSouth, MCI may designate its desired priority of completion of prelicense surveys and make-ready work with respect to all such applications.

7.1.1 Each application for a license under this Attachment shall specify the proposed route of MCI's facilities and identify the conduits and ducts or poles and pole facilities along the proposed route in which MCI desires to place or attach its facilities, and describe the physical size, weight and jacket material of the cable which MCI desires to place in each conduit or duct or the number and type of cables, apparatus enclosures and other facilities which MCI desires to attach to each pole.

7.1.2 Each application for a license under this Attachment shall be accompanied by a proposed (or estimated) construction schedule containing the information specified below in Section 10 herein, and an indication of whether MCI will, at it's option, perform it's own make-ready work.

7.2 Multiple Cables, Multiple Services, Lashing or Placing Additional Cables, and Replacement of Facilities. MCI may include multiple cables in a single license application and multiple services (e.g., CATV and non-CATV services) may be provided by MCI in the same cable sheath. MCI's lashing additional cable to existing facilities of MCI and placing additional cables in conduits or ducts already occupied by MCI's facilities shall be permitted, and no additional fees will be applied unless otherwise specifically allowed by law; provided, however, that if MCI desires to lash additional cable to existing facilities or place additional cables in conduits or ducts which are already occupied, or to replace existing facilities with new facilities substantially different from those described in licenses in effect, MCI must apply for and acquire a new license specifically describing the physical size, weight and jacket material of the cable to be placed in BellSouth's conduits and ducts or the physical size, weight, and jacket type of cables and the size and weight of apparatus enclosures and other facilities to be attached to BellSouth's poles.

7.3 Single Point of Contact. Each Party hereby designates the employees named below as its single point of contact for any and all purposes of this Attachment, including, but not limited to, processing licenses and applications and providing records and information. Each Party may at any time designate a new point of contact by giving written notice of such change.

		Notices		**Billing Address**
To Licensee as follows:				
Contact				
Title		Associate Counsel		Contracts Administration
Company		MCI		MCI
Address				
Address		2400 North Glenville Drive		2270 Lakeside Blvd.
City, State, and Zip Code		Richardson Texas 75082		Richardson, Texas 75082
Telephone		972-729-6751		972-729-7855
Facsimile		972-729-6927 ATTN: LPP Network & Facilities		972-729-6482
with a copy to:		Senior Manager Route Contracts Management (Fax No. 972-729-6482)		
		2270 Lakeside Blvd., Richardson, Texas 75082		
and to Licensor as follows:				
Contact		Arthur B. Williams		
Title		Manager		
Company		BellSouth Telecommunications, Inc.		
Address		North W3D2		
Address		3535 Colonnade Parkway		
City, State, and Zip Code		Birmingham, AL 35243		
Telephone		(205) 977-5068		
Facsimile		(205) 977-7997		

8. PROCESSING OF APPLICATIONS (INCLUDING PRELICENSE SURVEYS AND FIELD INSPECTIONS)

8.1 MCI's Priorities. When MCI has multiple applications on file with BellSouth, MCI shall designate its desired priority of completion of prelicense surveys and make-ready work with respect to all such applications.

8.2 Pre-license Survey. After MCI has submitted its written application for a license, a pre-license survey (including a field inspection) will be performed by either Party, in the company of a representative of the other Party, as mutually agreed, to determine whether BellSouth's poles, anchors and anchor/guy strands, or conduit system, in their present condition, can accommodate MCI's facilities, without substantially interfering with the ability of BellSouth or any other authorized person or entity to use or access the pole, anchor or anchor/guy strand or any portion of BellSouth's conduit system or facilities attached to BellSouth's pole or placed within or connected to BellSouth's conduit system. If MCI gives its prior written consent in writing, the determination of duct availability may include the "rodding" of ducts at MCI's expense.

If pre-license survey is to be conducted by BellSouth, BellSouth will provide MCI with a cost, based on its review of MCI's application request, to perform the pre-license survey. All charges for pre-license work performed by BellSouth are payable in advance, with the amount of any such advance payment to be due within sixty (60) calendar days after receipt of an invoice from BellSouth. Upon receipt of Licensee's payment of pre-license survey costs, BellSouth will schedule the survey for completion in a nondiscriminatory manner on a first-come first-served basis at parity with BellSouth.

8.2.1 The purpose of the prelicense survey is to determine whether space is available for MCI's proposed attachments or whether MCI's proposed attachments to BellSouth's poles or occupancy of BellSouth's conduit and ducts will substantially interfere with use of BellSouth's facilities by BellSouth and others with facilities occupying, connected or attached to BellSouth's pole or conduit system, and to provide information to MCI for its determination of whether the pole, anchor, anchor/guy strand, conduit, duct, or right-of-way is suitable for its use.

8.2.2 Based on information provided by BellSouth, MCI shall determine whether BellSouth's pole, anchor, anchor/guy strand, conduit and duct facilities are suitable to meet MCI's needs.

8.2.3 BellSouth may not unreasonably refuse to continue to process an application based on BellSouth's determination that MCI's proposed use of BellSouth's facilities will not be in compliance with applicable requirements, specifications, rules, regulations, ordinances, and laws. MCI shall be responsible for making its own, independent determination that its use of such facilities will be in compliance with such requirements, specifications, rules, regulations, ordinances and laws. MCI acknowledges that BellSouth is not explicitly or implicitly warranting to MCI that MCI's proposed use of BellSouth's facilities will be in compliance with applicable requirements, specifications, rules, regulations, ordinances, and laws.

8.3 Administrative Processing. The administrative processing portion of the prelicense survey (which includes, without limitation, processing the application, preparing make-ready work orders, notifying joint users and other persons and entities of work requirements and schedules, coordinating the relocation/rearrangement of BellSouth and/or other licensed facilities) will be performed by BellSouth at MCI's expense. Anything to the contrary herein notwithstanding, BellSouth shall bear no responsibility for the relocation, rearrangement or removal of facilities used for the transmission or distribution of electric power.

9. ISSUANCE OF LICENSES

9.1 Obligation to Issue Licenses. BellSouth shall issue a license to MCI pursuant to this Section 9. BellSouth and MCI acknowledge that each application for a license shall be evaluated on an

individual basis. Nothing contained in this Attachment shall be construed as abridging any independent pole attachment rights or conduit or duct access rights which MCI may have under the provisions of any applicable federal or State laws or regulations governing access to BellSouth's poles, conduits and ducts. Each license issued hereunder shall be for an indefinite term, subject to MCI's compliance with the provisions applicable to such license and further subject to MCI's right to terminate such license at any time for any reason upon at least thirty (30) calendar days' prior written notice.

9.1.1 Issuance of Licenses When No Make-Ready Work is Required.

9.2 Multiple Applications. MCI acknowledges that multiple parties, including BellSouth, may seek to place their facilities in BellSouth's conduit and ducts at or about the same time, that the make-ready work required to prepare BellSouth's facilities to accommodate multiple applicants may differ from the make-ready work required to accommodate a single applicant, that issues relating to the proper apportionment of costs arise in multi-applicant situations that do not arise in single-applicant situations, and that cooperation and negotiations between all applicants and BellSouth may be necessary to resolve disputes involving multiple applications for permission to place facilities in/on the same pole, conduit, duct, or right-of-way.

9.2.1 All applications will be processed on a first-come, first served basis.

9.3 Agreement to Pay for All Make-Ready Work Completed. MCI's submission of written authorization for make-ready work shall also constitute MCI' s agreement to pay additional cost-based charges, if any, for completed make-ready work.

9.4 Payments to Others for Expenses Incurred in Transferring or Arranging Their Facilities. MCI shall make arrangements with the owners of other facilities located in or connected to BellSouth's conduit system or attached to BellSouth's poles, anchors or anchor/guy strands regarding reimbursement for any expenses incurred by them in transferring or rearranging their facilities to accommodate the placement or attachment of MCI's facilities in or to BellSouth's structures.

9.5 All charges for make-ready work performed by BellSouth are payable in advance, with the amount of any such advance payment to be due within sixty (60) calendar days after receipt of an invoice from BellSouth. BellSouth shall send all invoices to MCI via overnight courier. BellSouth will schedule make-ready work for completion in a nondiscriminatory manner on a first come first served basis at parity with BellSouth. BellSouth will begin the process of scheduling make-ready work within twenty (20) business days of receipt of payment from MCI.

9.6 License. When MCI's application for a pole attachment or conduit occupancy license is approved, and all required make-ready work completed, BellSouth will execute and return a signed authorization to MCI, as appropriate, authorizing MCI to attach or place the specified facilities on BellSouth's poles or in BellSouth's conduit or ducts.

9.6.1 Each license issued under this Attachment shall authorize MCI to attach to BellSouth's poles or place or maintain in BellSouth's conduit or ducts only those facilities specifically described in the license, and no others.

9.6.2 Except as expressly stated to the contrary in individual licenses issued hereunder, each license issued pursuant to this Attachment shall incorporate all terms and conditions of this Attachment whether or not such terms or conditions are expressly incorporated by reference on the face of the license itself. In the event of a conflict between the provisions of such license and this Attachment, the provisions of this Attachment shall control.

10. CONSTRUCTION OF MCI's FACILITIES

10.1 Construction Schedule. MCI shall submit with MCI's license application a proposed or estimated construction schedule. Promptly after the issuance of a license permitting MCI to attach facilities to BellSouth's poles or place facilities in BellSouth's conduit or ducts, MCI shall provide BellSouth with

an updated construction schedule and shall thereafter keep BellSouth informed of significant anticipated changes in the construction schedule. Construction schedules required by this Attachment shall include, at a minimum, the following information:

10.1.1 The name, title, business address, and business telephone number of the manager responsible for construction of the facilities;

10.1.2 The names of each contractor and subcontractor which will be involved in the construction activities;

10.1.3 The estimated dates when construction will begin and end; and

10.1.4 The approximate dates when MCI or persons acting on MCI's behalf will be performing construction work in connection with the placement of MCI's facilities in BellSouth's conduit or ducts.

10.2 Additional Pre-construction Procedures for Facilities Placed in Conduit System. The following procedures shall apply before MCI places facilities in BellSouth's conduit system:

10.2.1 MCI shall give written notice of the type of facilities which are to be placed; and;

10.2.2 BellSouth shall designate the particular duct or ducts or inner ducts (if available) to be occupied by MCI's facilities, the location and the manner in which MCI's facilities will enter and exit BellSouth's conduit system, and the specific location and manner of installation of any associated equipment which is permitted by BellSouth to occupy the conduit system. MCI may not occupy a duct other than the specified duct without the express written consent of BellSouth. BellSouth shall provide to MCI space in manholes for racking and storage of up to fifty (50) feet of cable, provided space is available.

10.3 BellSouth Not Responsible for Constructing or Placing Facilities. BellSouth shall have no obligation under this Attachment to construct any facilities for MCI or to attach MCI's facilities to, or place MCI's facilities in, BellSouth's poles or conduit system, except as may be necessary to facilitate the interconnection of unbundled network elements or except to the extent expressly provided under this Attachment, any license issued hereunder, or by the Telecommunications Act of 1996 or any applicable law.

10.4 MCI Responsible for Constructing, Attaching and Placing Facilities. Except where otherwise mutually agreed by MCI and BellSouth, MCI shall be responsible for constructing its own facilities and attaching those facilities to, or placing them in BellSouth's poles, conduit or ducts, at MCI's sole cost and expense. MCI shall be solely responsible for paying all persons and entities who provide materials, labor, access to real or personal property, or other goods or services in connection with the construction and placement of MCI's facilities and for directing the activities of all persons acting on MCI's behalf while they are physically present on BellSouth's pole, in any part of BellSouth's conduit system or in the vicinity of BellSouth's poles or conduit system.

10.5 Compliance with Applicable Standards, Health and Safety Requirements, and Other Legal Requirements. MCI shall construct its facilities in accordance with the provisions of this Attachment and all licenses issued hereunder.

10.5.1 MCI shall not permit any person acting on MCI's behalf to perform any work on BellSouth's poles or within BellSouth's conduit system without first verifying, to the extent practicable, on each date when such work is to be performed, that the condition of the pole or conduit system is suitable for the work to be performed. If MCI or any person working on MCI's behalf determines that the condition of the pole or conduit system is not suitable for the work to be performed, MCI shall notify BellSouth of the condition of the pole or conduit system in question and shall not proceed with construction activities until MCI is satisfied that the work can be safely performed.

10.6 Construction Notices. If requested to do so, MCI shall provide BellSouth with information to reasonably assure BellSouth that construction has been performed in accordance with all applicable standards and requirements.

10.7 Manhole and Conduit Break-Outs. MCI shall be permitted to add conduit ports to BellSouth manholes when existing conduits do not provide the pathway connectivity needed by MCI, provided

the structural integrity of the manhole is maintained, and sound engineering judgment is employed.

10.8 Completion of Licensee Construction. For each Licensee Attachment to or occupancy within BellSouth facilities, Licensee will provide to BellSouth's single-point of contact within sixty (60) calendar days of Licensee construction-complete date) a complete set of actual placement drawings for posting to BellSouth records.

11. USE AND ROUTINE MAINTENANCE OF MCI's FACILITIES

11.1 Use of MCI's Facilities. Each license granted under this Attachment authorizes MCI to have access to MCI's facilities on or in BellSouth's poles, conduits and ducts as needed for the purpose of serving MCI's customers, including, but not limited to, powering electronics, monitoring facilities, or transporting signaling.

11.2 Routine Maintenance of MCI's Facilities. Each license granted under this Attachment authorizes MCI to engage in routine maintenance of MCI's facilities located on or in BellSouth's poles, conduits, ducts and rights-of-way pursuant to such license. MCI shall give reasonable notice to the affected public authority or private landowner, as appropriate, before commencing the construction or installation of its attachments or making any material alterations thereto. MCI shall give reasonable notice to BellSouth before performing any work, whether or not of a routine nature, in BellSouth's conduit system.

11.3 MCI Responsible for Maintenance of MCI's Facilities. MCI shall maintain its facilities in accordance with the provisions of this Attachment, including, but not limited to, all requirements set forth above in this agreement herein, and all licenses issued hereunder. MCI shall be solely responsible for paying all persons and entities who provide materials, labor, access to real or personal property, or other goods or services in connection with the maintenance of MCI's facilities and for directing the activities of all persons acting on MCI's behalf while they are physically present on BellSouth's poles, within BellSouth's conduit system or in the immediate vicinity of such poles or conduit system.

11.4 BellSouth Not Responsible for Maintaining MCI's Facilities. BellSouth shall have no obligation to maintain any facilities which MCI has attached or connected to, or placed in, BellSouth's poles, conduits, ducts or any portion of BellSouth's conduit system, except to the extent expressly provided by the provisions of this Attachment or any license issued hereunder, or by the Act or other applicable federal, State, or local laws, rules or regulations.

11.5 Information Concerning the Maintenance of MCI's Facilities. Promptly after the issuance of a license permitting MCI to attach facilities to, or place facilities in BellSouth's poles, conduits or ducts, MCI shall provide BellSouth with the name, title, business address, and business telephone number of the manager responsible for routine maintenance of MCI's facilities, and shall thereafter notify BellSouth of changes to such information. The manager responsible for routine maintenance of MCI's facilities shall, on BellSouth's request, identify any contractor, subcontractor, or other person performing maintenance activities on MCI's behalf at a specified site and shall, on BellSouth's request, provide such additional documentation relating to the maintenance of MCI's facilities as reasonably necessary to demonstrate that MCI and all persons acting on MCI's behalf are complying with the requirements of this Attachment and licenses issued hereunder.

11.6 Identification of Personnel Authorized to Have Access to MCI's Facilities. All personnel authorized to have access to MCI's facilities shall, while working on BellSouth's poles, in its conduit system or ducts or in the vicinity of such poles, ducts or conduit systems, carry with them suitable identification and shall, upon the request of any BellSouth employee, produce such identification.

12. MODIFICATION AND REPLACEMENT OF MCI's FACILITIES

12.1 Notification of Planned Modification or Replacement of Facilities. MCI shall, when practicable, notify BellSouth in writing at least sixty (60) calendar days before adding to, relocating, replacing or

otherwise modifying its facilities attached to a BellSouth pole, anchor or anchor/guy strand or located in any BellSouth conduit or duct. The notice shall contain sufficient information to enable BellSouth to determine whether the proposed addition, relocation, replacement, or modification is permitted under MCI's present license or requires a new or amended license.

12.2 New or Amended License Required. A new or amended license will be required if the proposed addition, relocation, replacement, or modification:

12.2.1 Requires that MCI use additional space on BellSouth's poles or in its conduits or ducts, including, but not limited to, any additional ducts, inner-ducts, or substantial space in any handhole or manhole, on either a temporary or permanent basis; or

12.2.2 Results in the size or location of MCI's facilities on BellSouth's poles or in its conduit or ducts being appreciably different from those described and authorized in MCI's then existing license (e.g., different duct or size increase causing a need to re-calculate storm loadings, guying, or pole class).

13. REARRANGEMENT OF FACILITIES AT THE REQUEST OF ANOTHER

13.1 Make-Ready Work at the Request of MCI. If, prior to the issuance of a license, MCI determines that any pole, anchor, anchor/guy strand, conduit or duct is inadequate to accommodate MCI's proposed pole attachment or conduit occupancy or that it will be necessary or desirable for BellSouth or any other person or entity to rearrange existing facilities or structures to accommodate MCI, MCI shall promptly advise BellSouth of the make-ready work it believes necessary to enable the accommodation of MCI's facilities.

13.1.1 BellSouth shall determine, in the exercise of sound engineering judgment, whether or not such make-ready work is necessary or possible. In determining whether make-ready work is necessary, BellSouth shall endeavor to minimize its costs. If it is determined that such make-ready work is required, within twenty (20) business days of such determination, BellSouth shall provide MCI with the estimated costs for make-ready work and a make-ready due date.

13.1.2 MCI shall be solely responsible for negotiating with persons or entities other than BellSouth for the rearrangement of such persons' or entities' facilities or structures and, except where such rearrangement is for the benefit of BellSouth and/or other licensees as well as MCI, shall be solely responsible for paying all charges attributable to the rearrangement of such facilities; provided, however, that if facilities rearrangements require new licenses from BellSouth, BellSouth shall issue such licenses in conjunction with the issuance of the applied-for license to MCI.

13.2 Rearrangement of MCI's Facilities at BellSouth's or Another Entity’s Request. MCI acknowledges that, from time to time, it may be necessary or desirable for BellSouth to change out poles, relocate, reconstruct, or modify portions of its conduit system or rearrange facilities contained therein or connected thereto and that such changes may be necessitated by BellSouth's business needs or by an authorized application or license of another entity seeking access to BellSouth's poles, conduit systems, ducts and/or rights-of-way. MCI agrees that MCI will, upon BellSouth's request, and at BellSouth's expense, but at no cost to MCI, participate with BellSouth and other licensees in the relocation, reconstruction, or modification of BellSouth's conduit system or facilities rearrangement. MCI acknowledges that, from time to time, it may be necessary or desirable for BellSouth to change out poles, relocate, reconstruct, or modify portions of its conduit system or rearrange facilities contained therein or connected thereto as a result of an order by a municipality or other governmental authority. MCI shall, upon BellSouth’s request, participate with BellSouth and other licensees in the relocation, reconstruction, or modification of BellSouth’s conduit system or facilities rearrangement and pay its proportionate share of any costs of such relocation, reconstruction, or modification that are not reimbursed by such municipality or governmental authority.

13.2.1 MCI shall make all rearrangements of its facilities within such period of time as is jointly deemed reasonable by the Parties based on the amount of rearrangements necessary and a desire to minimize

chances for service interruption or facility-based service denial to an MCI customer.

13.2.2 If MCI fails to make the required rearrangements within the time prescribed or within such extended periods of time as may be granted by BellSouth in writing, BellSouth may perform such rearrangements with written notice to MCI, and MCI shall reimburse BellSouth for actual costs and expenses incurred by BellSouth in connection with the rearrangement of MCI's facilities; provided, however, that nothing contained in this Attachment or any license issued hereunder shall be construed as requiring MCI to bear any expenses which, under the Act or other applicable federal or State laws, rules or regulations, are to be allocated to persons or entities other than MCI; and provided further, however, that MCI shall have no responsibility for rearrangement costs and expenses relating to rearrangements performed for the purpose of meeting BellSouth's business needs or the business needs of any other licensee/joint user.

13.2.3 MCI will not be required to bear any of the costs of rearranging or replacing its facilities, if such rearrangement or replacement is required as a result of an additional attachment or the modification of an existing attachment sought by any entity other than MCI, including BellSouth.

14. EMERGENCY REPAIRS AND POLE REPLACEMENTS

14.1 MCI Responsible for Emergency Repairs to its Own Facilities. In general, MCI shall be responsible for making emergency repairs to its own facilities and for formulating appropriate plans and practices which will enable it to make such emergency repairs. BellSouth shall be under no obligation to perform any repair or service restoration work of any kind with respect to MCI's facilities.

14.2 In the event of an emergency, restoration procedures may be affected by the presence of MCI facilities in or on BellSouth structures. While BellSouth maintains no responsibility for the repair of damaged MCI facilities , it must nonetheless control access to structures if restoration of affected facilities is to be achieved in an orderly fashion.

14. 3 When an emergency situation arises which necessitates Carrier access to a manhole, MCI should call BellSouth’s Access Customer Advocate Center (ACAC) or the Unbundled Network Element (UNE) Center. BellSouth will then arrange for access with on-call maintenance field personnel during the emergency situation. (A list of contact telephone numbers is available to MCI for this purpose; MCI can obtain this information from MCI’s account manager).

14.4 If only MCI owned facilities are affected, BellSouth shall use best efforts to respond within four (4) hours of MCI's call requesting BellSouth personnel to be present at site of emergency. MCI will perform emergency repair under the direction of BellSouth employee(s) or representative available, at MCI 's sole cost and expense. Should BellSouth not respond in agreed upon time frame, MCI will have the right to proceed with the emergency repair without BellSouth employee(s) present.

15. INSPECTION BY BELLSOUTH OF MCI’s FACILITIES

15.1 BellSouth's Right to Make Periodic or Spot Inspections. BellSouth shall have the right to make periodic or spot inspections at any time of any part of MCI's facilities attached to BellSouth's poles, anchors or anchor/guy strands or occupying any BellSouth conduit or duct for the limited purpose of determining whether MCI's facilities are in compliance with the terms of this Attachment and licenses granted hereunder; provided that such inspections must be non-invasive (e.g., no splice cases may be opened).

15.1.1 BellSouth will give MCI advance written notice of such inspections, and MCI shall have the right to have a representative attend such inspections, except in those instances where safety considerations justify the need for such inspection without the delay of waiting until written notice has been forwarded to MCI.

15.1.2 Such inspections shall be conducted at BellSouth's expense; provided, however, that MCI shall bear

the cost of inspections as delineated in Section 3.12.

15.2 No Duty to MCI. Neither the act of inspection by BellSouth of MCI's facilities nor any failure to inspect such facilities shall operate to impose on BellSouth any liability of any kind whatsoever or to relieve MCI of any responsibility, obligations or liability under this Attachment or otherwise existing.

16. NOTICE OF NONCOMPLIANCE

16.1 Notice of Noncompliance. If, at any time, BellSouth determines that MCI's facilities or any part thereof have not been placed or maintained or are not being used in accordance with the requirements of this Attachment, BellSouth may send written notice to MCI specifying the alleged noncompliance. MCI agrees to acknowledge receipt of the notice as soon as practicable. If MCI does not dispute BellSouth's assertion that such facilities are not in compliance, MCI agrees to provide BellSouth with a schedule for bringing such facilities into compliance, to bring the facilities into compliance within a reasonable time, and to notify BellSouth in writing when the facilities have been brought into compliance.

16.2 Disputes over Alleged Noncompliance. If MCI disputes BellSouth's assertion that MCI's facilities are not in compliance, MCI shall notify BellSouth in writing of the basis for MCI's assertion that its facilities are in compliance.

16.3 Failure to Bring Facilities into Compliance. If MCI has not brought the facilities into compliance within a reasonable time or provided BellSouth with proof sufficient to persuade BellSouth that BellSouth erred in asserting that the facilities were not in compliance, and if BellSouth determines in good faith that the alleged noncompliance causes or is likely to cause material damage to BellSouth's facilities or those of others users, BellSouth may, at its option and MCI's expense, take such non-service affecting steps as may be required to bring MCI's facilities into compliance, including but not limited to correcting any conditions which do not meet the specifications of this Attachment.

16.4 Correction of Conditions by BellSouth. If BellSouth elects to bring MCI's facilities into compliance, the provisions of this Attachment shall apply.

16.4.1 BellSouth will, whenever practicable, notify MCI in writing before performing such work. The written notice shall describe the nature of the work to be performed and BellSouth's schedule for performing the work.

16.4.2 If MCI's facilities have become detached or partially detached from supporting racks or wall supports located within a BellSouth manhole, BellSouth may, at MCI's expense, reattach them but shall not be obligated to do so. If BellSouth does not reattach MCI's facilities, BellSouth shall endeavor to arrange with MCI for the reattachment of any facilities affected.

16.4.3 BellSouth shall, as soon as practicable after performing the work, advise MCI in writing of the work performed or action taken. Upon receiving such notice, MCI shall inspect the facilities and take such steps as MCI may deem necessary to insure that the facilities meet MCI's performance requirements.

16.5 MCI to Bear Expenses. MCI shall bear all expenses arising out of or in connection with any work performed to bring MCI's facilities into compliance with the requirements of this Attachment; provided, however that nothing contained in this Attachment or any license issued hereunder shall be construed as requiring MCI to bear any expenses which, under applicable federal or State laws, rules or regulations, must be borne by persons or entities other than MCI.

17. UNAUTHORIZED OCCUPANCY OR UTILIZATION OF BELLSOUTH'S FACILITIES

17.1 Licensing or Removal of Unauthorized Attachments. If any of MCI's facilities shall be found attached to pole(s) or occupying conduit systems for which no license is outstanding, BellSouth, without prejudice to its other rights or remedies under this Agreement, including termination of licenses, may impose a charge and require MCI to submit in writing, within thirty (30) calendar days

after receipt of written notification from BellSouth of the unauthorized attachment or conduit occupancy, a pole attachment or conduit occupancy license application. If such application is not received by BellSouth within the specified time period, MCI may be required at BellSouth's option to remove its unauthorized attachment or occupancy within sixty (60) calendar days of the final date for submitting the required application, or BellSouth may at the end of such sixty (60) calendar day period, at BellSouth's option remove MCI's facilities without liability, and the expense of such removal shall be borne by MCI. Charges for any such unauthorized occupancy shall be equal to the applicable license fees and charges which would have been payable from and after the date such facilities were first placed on BellSouth's poles or in BellSouth's conduit system, if MCI provides reasonable documentation of such placement. If MCI is unable to provide such reasonable documentation the matter may be submitted to the Dispute Resolution Procedures set forth in the General Terms and Conditions of this Agreement.

17.1.1 Nothing contained in the Agreement or any license issued hereunder shall be construed as requiring MCI to bear any expenses which, under applicable federal or State laws or regulations, must be borne by persons or entities other than MCI.

17.2 Prompt Payment of Applicable Fees and Charges. Fees and charges for unauthorized pole attachments and conduit system occupancies, as specified in this Agreement, shall be due and payable within thirty (30) calendar days of receipt by MCI of an itemized invoice therefor.

17.3 No Implied Waiver or Ratification of Unauthorized Use. No act or failure to act by BellSouth with regard to said unlicensed use shall be deemed as a ratification of the unlicensed use; and if any license should be subsequently issued, said license shall not operate retroactively or constitute a waiver by BellSouth of any of its rights or privileges under this Attachment or otherwise; provided, however, that MCI shall be subject to all liabilities, obligations and responsibilities of this Attachment with respect to such unauthorized use from its inception.

18. REMOVAL OF MCI's FACILITIES

18.1 Pole Attachments. MCI, at its expense, will remove its attachments from any of BellSouth's poles within thirty (30) calendar days after termination of the license covering such attachments. If MCI fails to remove its attachments within such thirty (30) calendar day period, BellSouth shall have the right to remove such attachments at MCI's expense and without any liability on the part of BellSouth for damage or injury to MCI's attachments unless caused by the negligence or intentional misconduct of BellSouth.

18.2 Conduit Occupancy. MCI, at its expense, will remove its communications facilities from any BellSouth conduit system within sixty (60) calendar days after:

18.2.1 Termination of the license covering such conduit occupancy; or

18.2.2 The date MCI replaces its existing facilities in one (1) duct with substitute facilities in another duct.

18.2.3 If MCI fails to remove its facilities within the specified period, BellSouth shall have the right to remove such facilities at MCI's expense and without any liability on the part of BellSouth for damage or injury to such facilities unless caused by the negligence or intentional misconduct of BellSouth.

18.3 Continuing Responsibility for Fees and Charges. MCI shall remain liable for and pay to BellSouth all applicable fees and charges, if any, pursuant to provisions of this Agreement until all of MCI's facilities are physically removed from BellSouth's poles or conduit system.

19. FEES, CHARGES, AND BILLING

19.1 License Charges. MCI agrees to pay charges in Attachment 8, Exhibit 3. These rates will be recalculated during the term of this Agreement in accordance with the Telecommunications Act of

1996 and applicable FCC or State Commission rules and regulations. License charges commence on the first day of the calendar month following the date a license is issued. Such charges cease as of the final day of the calendar month preceding the month in which the attachment or occupancy is physically removed or the utilization is discontinued. A one (1) month minimum charge is applicable to all licenses. Such current-year charges are normally billed on or near July 1 of each year; annual billing is for the period January 1 through December 31 (six (6) months in arrears and six (6) months in advance) and to include true-up for actual billing for previous year's advance billing for period July 1 through December 31.

19.2 Computation of Charges. Attachment and occupancy rates shall be applied to the number of pole(s) and duct feet of conduit for which licenses have been issued before December 1 of each calendar year. Charges for attachment(s) and occupancy which commenced during the preceding twelve (12) month period will be prorated accordingly.

EXHIBIT 1

BellSouth Records Maintenance Centers

Plant Records

Records Maintenance Center
5228 Central Avenue
Charlotte, NC 28212

Right of Way Records

Regional Landbase Admin. Center
Attn.: Right of Way Records
16 GG 1 BST
301 W. Bay Street
Jacksonville, FL 32201

EXHIBIT 2

BELLSOUTH ADMINISTRATIVE FORMS AND NOTICES

This Exhibit 2 lists the types of administrative forms to be utilized in connection with this Agreement.

Type	Form Description	Form Number
General		
	Inquiry Request	GN-1
	Records Review Request	GN-2
	Pre-License Survey Request	GN-3
	Make-Ready Estimate Request	GN-4
	Building Space License Agreement for Shared Owner-Provided Access	GN-5
	CLEC Request to Complete Investigation of Facilities	GN-6
Poles		
	Application and Pole Attachment License	PL-1
	Pole Survey Form	PL-2
	Itemized Estimate	PL-3
	Notification of Surrender or Modification of Pole Attachment License	PL-4
Conduit		
	Application and Conduit Occupancy License	CN-1
	Conduit System Diagram	CN-2
	Conduit System - Manhole Detail	CN-3
	Cable to Occupy Conduit	CN-4
	Equipment Housings to be Placed in Manholes	CN-5
	Conduit Make-Ready Work & Charges	CN-6
	Notification of Surrender or Modification of Conduit Occupancy License	CN-7
	Request for Entry into Manhole(s) and/or Vaults	CN-8
	Request to “Rod” and/or Clearing of Ducts	CN-9
	Request to Core Bore and/or Modify Manhole(s)	CN-10
	Spare and/or Emergency Reservation	CN-11
Right of Way		
	Application and Right of Way Occupancy License	RW-1
Notification		
	Construction Performed and/or Completed	NT-1
	Lashing to Third Party Facilities	NT-2
	Dispute of Make-Ready Charges	NT-3
	Change in Priority for Processing Applications	NT-4
	Change of SPOC	NT-5
	Maintenance Manager	NT-6
	Inspection and Compliance	NT-7
	Unsafe Conditions	NT-8
	Dispute of Compliance	NT-9
	Facilities Brought into Compliance	NT-10
	BellSouth Notifications	NT-11
	Licensee Notifications	NT-12
	Consent of Licensor	NT-13

Exhibit 3

2004 FCC Formula Supported Fees
for attachments and/or occupancy effective 1/1/2004
(Re-calculated annually)

Licensee shall pay to Licensor the following fees:

State	Poles *(ea. / yr.)*		Anchors *(ea. / yr.)*	Conduit	
					($ / ft. / yr.)
	Non-Urban	**Urban**			

Urban and non-urban are defined by the Bureau of Census as follows: Urban is a city plus the closely-settled urban fringe that together have a minimum population of 50,000. Non-urban is less than 50,000.

Conduit rates will apply to each passageway (innerduct).

i) For the purpose of determining the Duct feet chargeable, the Duct considered occupied shall be measured from the center to center of adjacent Manhole(s), or from the center of a Manhole to the end of a Duct not terminated in a Manhole.

ii) The above rates are not applicable for crossings of any navigable waterway. Rates for navigable waterway crossings will be calculated on an individual case basis.

Pole Attachment Transfer Rate
Per Pole (throughout BellSouth region) $41.00

Attachment 9

Performance Measurements

PERFORMANCE MEASUREMENTS

Upon a particular Commission's issuance of an Order pertaining to Performance Measurements or Remedy Plans in a proceeding expressly applicable to all CLECs generally, BellSouth shall implement such performance measures and remedy plans covering its performance toward MCI and other CLECs, as well as any changes to those plans ordered by the Commission, on the date specified by the Commission. Performance Measurements and remedy plans that have been ordered by the Commission can currently be accessed via the Internet at http://pmap.bellsouth.com. Should there be any difference between the Performance Measurements and remedy plans on BellSouth's website and the plans the Commission has approved as filed in compliance with its orders, the Commission-approved compliance plan will supersede as of its effective date. Nothing in this Attachment 9 shall supercede a Party's right to other remedies or legal recourse available under other provisions of this Agreement, the Act and Applicable Law; provided, however, that the payment of any associated remedies or enforcement mechanisms to each CLEC shall be credited against any liability associated with or related to BellSouth's service performance and shall not be considered an admission against interest or an admission of culpability or liability in any legal, regulatory or other proceeding, nor constitute evidence that BellSouth failed to comply with or has violated any state or federal law or regulation.

For TN only: The following Service Quality Measurements (SQM) and Self Effectuating Enforcement Mechanim (SEEM) plan as it presently exists and as it may be modified in the future, is being included as the performance measurements currently in place for the state of Tennessee. At such time that the TRA issues a subsequent Order pertaining to Performance Measurements or SEEM plan, such Performance Measurements shall supersede the SQM and SEEM contained in the Agreement.

BellSouth Service Quality Measurement Plan (SQM)

Tennessee Performance Metrics

Measurement Descriptions
Version 2.00

Issue Date: July 1, 2003

Introduction

BST agrees to report performance and pay remedies when benchmarks or "parity" with its treatment of its own similarly situated retail customers or those of its affiliates are not achieved, as required by the decisions of the Florida Public Service Commission in Docket No. 000121A-TP - Investigation into the Establishment of Operations Support Systems Permanent Performance Measures for Incumbent Local Exchange Telecommunications Companies (BellSouth track). BST will adhere to the metric and remedy plan adopted in this proceeding as currently established by the PSC and as updated through orders following six-month reviews and other proceedings related to metrics and remedies during the pendency of this contract. By agreeing to abide by the state approved performance and remedy plan, neither party gives up its right to argue that the remedies paid under this plan are adequate or inadequate to cover harms and damages to MCI due to non-compliant or discriminatory performance in activities both covered and not covered by the plan.

The BellSouth Service Quality Measurement Plan (SQM) describes in detail the measurements produced to evaluate the quality of service delivered to BellSouth's customers both wholesale and retail. The SQM was developed to respond to the requirements of the Communications Act of 1996 Section 251 (96 Act) which required BellSouth to provide non-discriminatory access to Competitive Local Exchange Carriers (CLEC)[1] and their Retail Customers. The reports produced by the SQM provide regulators, CLECs and BellSouth the information necessary to monitor the delivery of non-discriminatory access.

This plan results from the many divergent forces evolving from the 96 Act. The 96 Act, the Georgia Public Service Commission (GPSC) Order (Docket 7892-U 12/30/97), LCUG 1-7.0, the FCC's NPRM (CC Docket 98-56 RM9101 04/17/98), the Louisiana Public Service Commission (LPSC) Order (Docket U-22252 Subdocket C 04/19/98), numerous arbitration cases, LPSC sponsored collaborative workshops (10/98-02/00), and proceedings in Alabama, Florida, Mississippi, and North Carolina have and continue to influence the SQM. Per the Order in Docket 01-00193, issued by the Tennessee Regulatory Authority on October 4, 2002, this version of the SQM reflects the Florida Public Service Commission Order Nos. PSC-02-1736-PAA-TP, issued December 10, 2002, PSC-03-0529-PAA-TP, issued April 22, 2003 and PSC-03-0603-CO-TP, issued May 15, 2003.

The SQM and the reports flowing from it must change to reflect the dynamic requirements of the industry. New measurements are added as new products, systems, and processes are developed and fielded. New products and services are added as the markets for them develop and the processes stabilize. The measurements are also changed to reflect changes in systems, correct errors, and respond to both 3rd Party audit requirements and the Florida PSC.

This document is intended for use by someone with knowledge of the telecommunications industry, information technologies and a functional knowledge of the subject areas covered by the BellSouth Performance Measurements and the reports that flow from them.

[1] *Alternative Local Exchange Companies (ALEC) and Competing Local Providers (CLP) are referred to as Competitive Local Exchange Carriers (CLEC) in this document.*

Once it is approved, the most current copy of this document can be found on the web at URL: http://pmap.bellsouth.com in the Documentation/Exhibits folder.

Report Publication Dates

Each month, preliminary SQM reports will be posted to BellSouth's SQM web site (http://pmap.bellsouth.com) by 8:00 A.M. EST on the 21st day of each month or the first business day after the 21st. The validated SQM reports will be posted by 8:00 A.M. on the last day of the month. Reports not posted by this time will be considered late for SEEM payment purposes. Validated SEEM reports will be posted on the 15th of the following month. SEEM payments due will also be paid on the 15th of the following month. For instance: May data will be posted in preliminary SQM reports on June 21. Final validated SQM reports will be posted on the last day of the month. Final validated SEEM reports will be posted and payments mailed on the 15th of the following month. BellSouth shall retain the performance measurement raw data files for a period of 18 months and further retain the monthly reports produced in PMAP for a period of three years.

Report Delivery Methods

CLEC SQM and SEEM reports will be considered delivered when posted to the web site. The Tennessee Regulatory Authority has access to the web site. In addition, a copy of the SQM and Monthly State Summary reports will be filed with the TRA as soon as possible after the last day of each month.

Contents

Section 1: Operations Support Systems (OSS)

OSS-1: Average Response Interval and Percent within Interval (Pre-Ordering/Ordering) 4
OSS-2: OSS Availability (Pre-Ordering/Ordering) 7
OSS-3: OSS Availability (Maintenance & Repair) 9
OSS-4: Response Interval (Maintenance & Repair) 11
PO-1: Loop Makeup - Response Time – Manual 13
PO-2: Loop Makeup - Response Time - Electronic 15

Section 2: Ordering

O-1: Acknowledgement Message Timeliness 17
O-2: Acknowledgement Message Completeness 19
O-3: Percent Flow-Through Service Requests (Summary) 21
O-4: Percent Flow-Through Service Requests (Detail) 24
Flow-Through Error Analysis 27
O-6: CLEC LSR Information 29
O-7: Percent Rejected Service Requests 31
O-8: Reject Interval 34
O-9: Firm Order Confirmation Timeliness 38
O-10: Service Inquiry with LSR Firm Order Confirmation (FOC) Response Time Manual 42
O-11: Firm Order Confirmation and Reject Response Completeness 44
O-12: Speed of Answer in Ordering Center 46

Section 3: Provisioning

P-1: Mean Held Order Interval & Distribution Intervals 48
P-2: (Deleted) Average Jeopardy Notice Interval & Percentage of Orders Given Jeopardy Notices 51
P-2A: Jeopardy Notice Interval 52
P-2B: Percentage of Orders Given Jeopardy Notices 54
P-3: Percent Missed Initial Installation Appointments 57
P-3A: (Deleted) Percent Missed Installation Appointments Including Subsequent Appointment 60
P-4: Average Completion Interval (OCI) & Order Completion Interval Distribution 61
P-4A: (Deleted) Average Order Completion Interval (OCI) & Order Completion Interval Distribution 64
P-5: Average Completion Notice Interval 65
P-6: % Completions/Attempts without Notice or < 24 hours Notice 68
P-7: Coordinated Customer Conversions Interval 70
P-7A: Coordinated Customer Conversions – Hot Cut Timeliness% within Interval and Average Interval 72
P-7B: Coordinated Customer Conversions – Average Recovery Time 75
P-7C: Hot Cut Conversions - % Provisioning Troubles Received within 7 Days of a Completed Service Order 77
P-8: Cooperative Acceptance Testing - % of xDSL Loops Successfully Passing Cooperative Testing 79
P-9: % Provisioning Troubles within 30 Days of Service Order Completion 81
P-10: (Deleted) Total Service Order Cycle Time (TSOCT) 84
P-11: Service Order Accuracy 85
P-11A: Service Order Accuracy 87
P-12: (Deleted) LNP-Average Disconnect Timeliness Interval & Disconnect Timeliness Interval Distribution 90
P-13B: LNP-Percent Out of Service < 60 Minutes 91
P-13C: LNP-Percentage of Time BellSouth Applies the 10-Digit Trigger Prior to the LNP Order Due Date 93
P-13D: LNP-Average Disconnect Timeliness Interval Distribution (Non-Trigger) 95

Section 4: Maintenance & Repair

M&R-1: Missed Repair Appointments 97
M&R-2: Customer Trouble Report Rate 100
M&R-3: Maintenance Average Duration 103
M&R-4: Percent Repeat Troubles within 30 Days 106

M&R-5: Out of Service (OOS) > 24 Hours 109
M&R-6: Average Answer Time – Repair Centers 112
M&R-7: Mean Time To Notify CLEC of Network Outages 114

Section 5: Billing

B-1: Invoice Accuracy 116
B-2: Mean Time to Deliver Invoices 118
B-3: Usage Data Delivery Accuracy 120
B-4: Usage Data Delivery Completeness 122
B-5: Usage Data Delivery Timeliness 124
B-6: Mean Time to Deliver Usage 126
B-7: Recurring Charge Completeness 128
B-8: Nonrecurring Charge Completeness 130
B-9: Percent Daily Usage Feed Errors Corrected in "X" Business Days 132
B-10: Percent Billing Errors Corrected in "X" Business Days 134

Section 6: Operator Services and Directory Assistance

OS-1: Speed to Answer Performance/Average Speed to Answer - Toll 136
OS-2: Speed to Answer Performance/Percent Answered within "X" Seconds – Toll 138
DA-1: Speed to Answer Performance/Average Speed to Answer – Directory Assistance (DA) 140
DA-2: Speed to Answer Performance/Percent Answered within "X" Seconds – Directory Assistance (DA) 142

Section 7: Database Update Information

D-1: Average Database Update Interval 144
D-2: Percent Database Update Accuracy 146
D-3: Percent NXXs and LRNs Loaded by the LERG Effective Date 148

Section 8: E911

E-1: Timeliness 150
E-2: Accuracy 152
E-3: Mean Interval 153

Section 9: Trunk Group Performance

TGP-1: Trunk Group Performance-Aggregate 155
TGP-2: Trunk Group Performance-CLEC Specific 158

Section 10: Collocation

C-1: Collocation Average Response Time 161
C-2: Collocation Average Arrangement Time 163
C-3: Collocation Percent of Due Dates Missed 165

Section 11: Change Management

CM-1: Timeliness of Change Management Notices 167
CM-2: Change Management Notice Average Delay Days 169
CM-3: Timeliness of Documents Associated with Change 171
CM-4: Change Management Documentation Average Delay Days 173
CM-5: Notification of CLEC Interface Outages 175
CM-6: Percent of Software Errors Corrected in "X" (10, 30, 45) Business Days 177
CM-7: Percent of Change Requests Accepted or Rejected within 10 Days 179
CM-8: Percent Change Requests Rejected 180
CM-9: Number of Defects in Production Releases (Type 6 CR) 182
CM-10: Software Validations 184
CM-11: Percent of Change Requests Implemented within 60 Weeks of Prioritization 186

Appendix A: Reporting Scope
A-1: Standard Service Groupings....188
A-2: Standard Service Order Activities 188

Appendix B: Glossary of Acronyms and Terms
....189

Appendix C: BellSouth Audit Policy
C-1: BellSouth's Internal Audit Policy....199
C-2: BellSouth's External Audit Policy....199

Appendix D: OSS Tables
....200

Appendix E: Flow-Through Matrix
....205

Section 1: Operations Support Systems (OSS)

OSS-1: Average Response Interval and Percent within Interval (Pre-Ordering/Ordering)

Definition

The average response interval and percent within the Interval is the average times and percent of requests responded to within certain intervals for accessing legacy data associated with appointment scheduling, service and feature availability, address verification, request for Telephone numbers (TNs), and Customer Service Records (CSRs).

Exclusions

- Syntactically incorrect queries
- Scheduled OSS Maintenance
- Retail usage of LENS

Business Rules

The average response interval for retrieving pre-order/order information from a given legacy system is determined by summing the response times for all requests submitted to the legacy systems during the reporting period and dividing by the total number of legacy system requests for that month.

The response interval starts when the application (LENS or TAG for CLECs and RNS or ROS for BellSouth) submits a request to the legacy system and ends when the appropriate response is received by the client application. The percent of accesses to the legacy systems during the reporting period which take less than 2.3 seconds, the percent of accesses which take more than 6 seconds, and the percent which are less than or equal to 6.3 seconds are also captured. BellSouth will not schedule maintenance during the hours from 8:00 a.m. until 9:00 p.m., Monday through Friday.

Calculation

Response Interval = (a - b)

- a = Date and Time of Legacy Response
- b = Date and Time of Legacy Request

Average Response Interval = c / d

- c = Sum of Response Intervals
- d = Number of Legacy Requests During the Reporting Period

Percent within Interval = (e / f) X 100

- e = Count of requests within the designated Interval within the reporting period.
- f = Number of Legacy Requests during the Reporting Period for System for which a response was provided.

Report Structure

- Interface Type
- Not CLEC Specific
- Not Product/Service Specific
- Regional Level

Data Retained

Relating to CLEC Experience

- Report Month
- Legacy Contract (per reporting dimension)
- Response Interval
- Regional Scope

Relating to BellSouth Performance

- Report Month
- Legacy Contract (per reporting dimension)
- Response Interval
- Regional Scope

SQM Disaggregation - Analog/Benchmark

SQM Level of Disaggregation

- **RSAG – Address** (Regional Street Address Guide-Address) – stores street address information used to validate customer addresses. CLECs and BellSouth query this legacy system.
- **RSAG – TN** (Regional Street Address Guide-Telephone number) – contains information about facilities available and telephone numbers working at a given address. CLECs and BellSouth query this legacy system.
- **ATLAS** (Application for Telephone Number Load Administration and Selection) – acts as a warehouse for storing telephone numbers that are available for assignment by the system. It enables CLECs and BellSouth service reps to select and reserve telephone numbers. CLECs and BellSouth query this legacy system.
- **COFFI** (Central Office Feature File Interface) – stores information about product and service offerings and availability. CLECs query this legacy system.
- **DSAP** (DOE Support Application) – provides due date information. CLECs and BellSouth query this legacy system.
- **CRIS** (Customer Record Information System) – Source of CSR (Customer Service Record) information. Contains information about individual customers including listings, addresses, features, services, etc. CLECs and BellSouth can query for CSR information.
- **P/SIMS** (Product/Services Inventory Management system) – provides information on capacity, tariffs, inventory and service availability. CLECs query this legacy system.
- **OASIS** (Obtain Available Services Information Systems) – Information on feature and rate availability. BellSouth queries this legacy system.

SQM Analog/Benchmark

- Parity + 2 seconds

(See Appendix D: Tables for SQM OSS Legacy Access Times)

SEEM Measure

SEEM	Tier I	Tier II	Tier III
Yes	.....	 X	.....

SEEM Disaggregation - Analog/Benchmark

SEEM Disaggregation

- **RSAG – Address** (Regional Street Address Guide-Address) – stores street address information used to validate customer addresses. CLECs and BellSouth query this legacy system.
- **RSAG – TN** (Regional Street Address Guide-Telephone number) – contains information about facilities available and telephone numbers working at a given address. CLECs and BellSouth query this legacy system.
- **ATLAS** (Application for Telephone Number Load Administration and Selection) – acts as a warehouse for storing telephone numbers that are available for assignment by the system. It enables CLECs and BellSouth service reps to select and reserve

telephone numbers. CLECs and BellSouth query this legacy system.

- **COFFI** (Central Office Feature File Interface) – stores information about product and service offerings and availability. CLECs query this legacy system.
- **DSAP** (DOE Support Application) – provides due date information. CLECs and BellSouth query this legacy system.
- **CRIS** (Customer Record Information System) – Source of CSR (Customer Service Record) information. Contains information about individual customers including listings, addresses, features, services, etc. CLECs and BellSouth can query for CSR information.
- **P/SIMS** (Product/Services Inventory Management system) – provides information on capacity, tariffs, inventory and service availability. CLECs query this legacy system.
- **OASIS** (Obtain Available Services Information Systems) – Information on feature and rate availability. BellSouth queries this legacy system.

SEEM Analog/Benchmark

- Parity + 2 Seconds

(See Appendix D: Tables for SEEM OSS Legacy Systems)

OSS-2: OSS Availability (Pre-Ordering/Ordering)

Definition

Percent of time OSS interface is functionally available compared to scheduled availability. Availability percentages for CLEC interface and for all Legacy systems accessed by them are captured. ("Functional Availability" is the amount of time in hours during the reporting period that the legacy systems are available to users. The planned System Scheduled Availability is the time in hours per day that the legacy system is scheduled to be available.)

Scheduled availability is posted on the Interconnection website: (www.interconnection.bellsouth.com/oss/osshour.html)

Exclusions

- CLEC impacting troubles caused by factors outside of BellSouth's purview, e.g., troubles in customer equipment, troubles in networks owned by telecommunications companies other than BellSouth, etc.
- Degraded service outages which are defined as a critical function that is normally performed by the CLEC or is normally provided by an application or system available to the CLEC, but with significantly reduced response or processing time.
- Scheduled OSS Maintenance

Business Rules

This measurement captures the functional availability of applications/interfaces as a percentage of scheduled availability for the same systems. Only full and Loss of Functionality outages are included in the calculation for this measure. Full outages are defined as occurrences of either of the following:

- Application/Interface application is down or totally inoperative.
- Application is totally inoperative for customers attempting to access or use the application. This includes transport outages when they may be directly associated with a specific application.
- Loss of Functionality outages are defined as:
  - A critical function that is normally performed by the CLEC or is normally provided by an application or system is temporarily unavailable to the CLEC.

Comparison to an internal benchmark provides a vehicle for determining whether or not CLECs and retail BellSouth entities are given comparable opportunities for use of pre-ordering and ordering systems.

(Note: Scheduled maintenance will not be performed between the hours of 8:00 a.m through 9:00 p.m. Monday through Friday.)

Calculation

OSS Availability (Pre-Ordering/Ordering) = (a / b) X 100

- a = Functional Availability
- b = Scheduled Availability

Report Structure

- Interface Type
- Not CLEC Specific
- Not Product/Service Specific
- Regional Level

Data Retained

Relating to CLEC Experience

- Report Month
- Legacy Contract Type (per reporting dimension)
- Regional Scope
- Hours of Downtime

Relating to BellSouth Performance

- Report Month
- Legacy Contract Type (per reporting dimension)
- Regional Scope
- Hours of Downtime

SQM Disaggregation - Analog/Benchmark

SQM Level of Disaggregation	SQM Analog/Benchmark
• Regional Level, Per OSS Interface	>= 99.5%

(See Appendix D: Tables for SQM OSS Availability)

SEEM Measure

SEEM	Tier I	Tier II
Yes		X

SEEM Disaggregation - Analog/Benchmark

SEEM Disaggregation	SEEM Analog/Benchmark
• Regional Level, Per OSS Interface	>= 99.5%

(See Appendix D: Tables for SEEM OSS Availability)

OSS-3: OSS Availability (Maintenance & Repair)

Definition

Percent of time applications are functionally available as compared to scheduled availability. Calculations are based upon availability of applications and interfacing applications utilized by CLECs for maintenance and repair. "Functional Availability" is defined as the number of hours in the reporting period that the applications/interfaces are available to users. "Scheduled Availability" is defined as the number of hours in the reporting period that the applications/interfaces are scheduled to be available.

Scheduled availability is posted on the Interconnection website: (www.interconnection.bellsouth.com/oss/osshour.html)

Exclusions

- CLEC-impacting trouble caused by factors outside of BellSouth's purview, e.g., troubles in customer equipment, troubles in networks owned by telecommunications companies other than BellSouth, etc.
- Degraded service outages which are defined as a critical function that is normally performed by the CLEC or is normally provided by an application or system available to the CLEC, but with significantly reduced response or processing time.

Business Rules

This measurement captures the functional availability of applications/interfaces as a percentage of scheduled availability for the same systems. Only full outages are included in the calculations for this measure. Full outages are defined as occurrences of either of the following:

- Application/interfacing application is down or totally inoperative.
- Application is totally inoperative for customers attempting to access or use the application. This includes transport outages when they may be directly associated with a specific application.

Loss of Functionality outages are defined as:

- A critical function that is normally performed by the CLEC or is normally provided by an application or system is temporarily unavailable to the CLEC.

Comparison to an internal benchmark provides a vehicle for determining whether or not CLECs and retail BellSouth entities are given comparable opportunities for use of maintenance and repair systems.

Calculation

OSS Availability (a / b) X 100

- a = Functional Availability
- b = Scheduled Availability

Report Structure

- Interface Type
- Not CLEC Specific
- Not Product/Service Specific
- Regional Level

Data Retained

Relating to CLEC Experience

- Availability of CLEC TAFI
- Availability of LMOS HOST, MARCH, SOCS, CRIS, PREDICTOR, LNP and OSPCM

- ECTA

Relating to BellSouth Performance

- Availability of BellSouth TAFI
- Availability of LMOS HOST, MARCH, SOCS, CRIS, PREDICTOR, LNP and OSPCM

SQM Disaggregation - Analog/Benchmark

SQM Level of Disaggregation	SQM Analog/Benchmark
• Regional Level, Per OSS Interface	>= 99.5%

(See Appendix D: Tables for OSS Availability (M&R)

SEEM Measure

SEEM	Tier I	Tier II
Yes		X

SEEM Disaggregation - Analog/Benchmark

SEEM Disaggregation	SEEM Analog/Benchmark
• Regional Level, Per OSS Interface	>= 99.5%

(See Appendix D: Tables for SEEM OSS Availability (M&R)

OSS-4: Response Interval (Maintenance & Repair)

Definition

The response intervals are determined by subtracting the time a request is received on the BellSouth side of the interface from the time the response is received from the legacy system. Percentages of requests falling into each interval category are reported, along with the actual number of requests falling into those categories.

Exclusions

None

Business Rules

This measure is designed to monitor the time required for the CLEC and BellSouth interface system to obtain from BellSouth's legacy systems the information required to handle maintenance and repair functions. The clock starts on the date and time when the request is received on the BellSouth side of the interface and the clock stops when the response has been transmitted through that same point to the requester.

Note: The OSS Response Interval BellSouth Total Report is a combination of BellSouth Residence and Business Total.

Calculation

OSS Response Interval = (a - b)

- a = Query Response Date and Time
- b = Query Request Date and Time

Percent Response Interval (per category) = (c / d) X 100

- c = Number of Response Intervals in category "X"
- d = Number of Queries Submitted in the Reporting Period

where, "X" is <= 4, > 4 <= 10, <= 10, > 10, or > 30 seconds.

Average Interval = (e / f)

- e = Sum of Response Intervals
- f = Number of Queries Submitted in the Reporting Period

Report Structure

- Not CLEC Specific
- Not Product/Service Specific
- Regional Level

Data Retained

Relating to CLEC Experience

- CLEC Transaction Intervals

Relating to BellSouth Performance

- BellSouth Business and Residential Transactions Intervals

SQM Disaggregation - Analog/Benchmark

SQM Level of Disaggregation	SQM Analog/Benchmark
• Regional Level, Per OSS Interface	Parity with Retail

(See Appendix D: Tables for Legacy System Access Times for M&R)

Note: BellSouth's Appendix D lists the query functions and the appropriate legacy systems that the queries travel through to return a response.

SEEM Measure

SEEM	Tier I	Tier II
Yes		X

SEEM Disaggregation - Analog/Benchmark

SEEM Disaggregation	SEEM Analog/Benchmark
• Region Level, Per OSS Interface	Parity with Retail

PO-1: Loop Makeup - Response Time – Manual

Definition

This report measures the average interval and percent within the interval from the submission of a Manual Loop Makeup Service Inquiry (LMUSI) to the distribution of Loop Makeup information back to the CLEC.

Exclusions

- Inquiries, which are submitted electronically
- Designated Holidays are excluded from the interval calculation
- Weekends are excluded from the interval calculation
- Canceled Inquiries

Business Rules

The CLEC Manual Loop Makeup Service Inquiry (LMUSI) process includes inquiries submitted via E-mail or FAX to BellSouth's Complex Resale Support Group (CRSG)

This measurement combines three intervals:

1. From receipt of a valid Service Inquiry for Loop Makeup to hand off to the Service Advocacy Center (SAC) for "Look-up."
2. From SAC start date to SAC complete date
3. From SAC complete date to date the Complex Resale Support Group (CRSG) distributes loop makeup information back to the CLEC.

The "Receive Date" is defined as the date the Manual LMUSI is received by the CRSG. It is counted as day Zero. LMU "Return Date" is defined as the date the LMU information is sent back to the CLEC from BellSouth. The interval calculation is reset to Zero when a CLEC initiated change occurs on the Manual LMU request.

Note: The Loop Makeup Service Inquiry Form does not require the CLEC to furnish the type of Loop. The CLEC determines whether the loop makeup will support the type of service they wish to order or not and qualifies the loop. If the loop makeup will support the service, a firm order LSR is submitted by the CLEC.

(A valid Service Inquiry is an inquiry that has all required fields populated correctly and has not been returned for clarification.)

Calculation

Response Interval = (a - b)

- a = Date the LMUSI returned to CLEC
- b = Date the LMUSI is received

Average Interval = (c / d)

- c = Sum of all Response Intervals
- d = Total Number of LMUSIs received within the reporting period

Percent within interval = (e / f) X 100

- e = Total LMUSIs received within the interval
- f = Total Number of LMUSIs processed within the reporting period

Report Structure

- CLEC Aggregate
- CLEC Specific
- Geographic Scope
  - State
  - Region
- Interval for manual LMUs:
  0 – <=1 day
  >1 – <= 2 days
  >2 – <= 3 days
  0 - <= 3 days
  >3 – <= 6 days
  >6 – <= 10 days
  > 10 days
- Average Interval in days

Data Retained

Relating to CLEC Experience

- Report Month
- Total Number of Inquiries
- SI Intervals
- State and Region

Relating to BellSouth Performance

SQM Disaggregation - Analog/Benchmark

SQM Level of Disaggregation	SQM Analog/Benchmark
• Loops	Benchmark: 95% <= 3 Business Days

SEEM Measure

SEEM	Tier I	Tier II
Yes	X	X

SEEM Disaggregation - Analog/Benchmark

SEEM Disaggregation	SEEM Analog/Benchmark
• Loops	Benchmark: 95% <= 3 Business Days

PO-2: Loop Makeup - Response Time - Electronic

Definition

This report measures the average interval and the percent within the interval from the electronic submission of a Loop Makeup Service Inquiry (LMUSI) to the distribution of Loop Makeup information back to the CLEC.

Exclusions

- Manually submitted inquiries
- Canceled Requests

Business Rules

The response interval starts when the CLEC's Mechanized Loop Makeup Service Inquiry (LMUSI) is submitted electronically through the Operational Support Systems interface, TAG. It ends when BellSouth's Loop Facility Assignment and Control System (LFACS) responds electronically to the CLEC with the requested Loop Makeup data via the TAG Interface. LSRs submitted via LENs will be reflected in the results for the TAG interface.

> **Note**: The Loop Makeup Service Inquiry Form does not require the CLEC to furnish the type of Loop. The CLEC determines whether the loop makeup will support the type of service they wish to order or not and qualifies the loop. If the loop makeup will support the service, a firm order LSR is submitted by the CLEC. EDI is not a pre-ordering system, and, therefore, is not applicable in this measure.

Calculation

Response Interval = (a - b)

- a = Date and Time the LMUSI returned to CLEC
- b = Date and Time the LMUSI is received

Average Interval = (c / d)

- c = Sum of all response intervals
- d = Total Number of LMUSIs received within the reporting period

Percent within interval = (e / f) X 100

- e = Total LMUSIs received within the interval
- f = Total Number of LMUSIs processed within the reporting period

Report Structure

- CLEC Aggregate
- CLEC Specific
- Geographic Scope
  - State
  - Region
- Interval for electronic LMUs:
  0 – <= 1 minute
  >1 – <= 5 minutes
  0 - <= 5 minutes
  > 5 – <= 8 minutes
  > 8 – <= 15 minutes

> 15 minutes
- Average Interval in minutes

Data Retained

Relating to CLEC Experience

- Report Month
- Total Number of Inquires
- SI Interval
- State and Region

Relating to BellSouth Performance

- Not Applicable

SQM Disaggregation - Analog/Benchmark

SQM Level of Disaggregation	SQM Analog/Benchmark
• Loop	Benchmark: 95% <= 1 Minute

SEEM Measure

SEEM	Tier I	Tier II
Yes	X	X

SEEM Disaggregation - Analog/Benchmark

SEEM Disaggregation	SEEM Analog/Benchmark
• Loop	95% <= 1 Minute

Section 2: Ordering

O-1: Acknowledgement Message Timeliness

Definition

This measurement provides the response interval and percent within the interval from the time an LSR or transmission (may contain multiple LSRs from one or more CLECs in multiple states) is electronically submitted via EDI or TAG until an acknowledgement notice is sent by the system.

Exclusions

- Scheduled OSS Maintenance
- Manually Submitted LSRs

Business Rules

The process includes EDI and TAG system functional acknowledgements for all Local Service Requests (LSRs) which are electronically submitted by the CLEC. The start time is the receipt time of the LSR at BellSouth's side of the interface (gateway). The end time is when the acknowledgement is transmitted by BellSouth at BellSouth's side of the interface (gateway). For those CLECs using EDI, if more than one CLEC uses the same ordering center, an Acknowledgement Message will be returned to the "Aggregator", however, BellSouth will not be able to determine which specific CLEC this message represented.

Calculation

Response Interval = (a - b)

- a = Date and Time Acknowledgement Notices returned to CLEC
- b = Date and Time Messages/LSRs electronically submitted by the CLEC via EDI or TAG respectively

Average Response Interval = (c / d)

- c = Sum of all Response Intervals for returned acknowledgements
- d = Total number of electronically submitted Messages/LSRs received, via EDI or TAG respectively, for which Acknowledgement Notices were returned in the Reporting Period.

Percent within Interval = (e / f) X 100

- e = Total number of electronically submitted messages/LSRs received, from CLEC via EDI or TAG respectively, in the Reporting Period.
- f = Total number of electronically submitted messages/LSRs acknowledged in the Reporting Period.

Reporting Structure

- CLEC Aggregate
- CLEC Specific
- Geographic Scope
  - Region
- Electronically Submitted LSRs
  0 – <=10 minutes
  > 10 – <= 20 minutes
  > 20 – <= 30 minutes
  0 – <= 30 minutes
  > 30 – <= 45 minutes
  > 45 – <= 60 minutes

> 60 – <= 120 minutes
> 120 minutes
- Average interval for electronically submitted LSRs in minutes

Data Retained

Relating to CLEC Experience

- Report Month
- Record of Functional Acknowledgements

Relating to BellSouth Performance

- Not Applicable

SQM Disaggregation - Analog/Benchmark

SQM Level of Disaggregation	SQM Analog/Benchmark
EDI	EDI – 95% <= 30 Minutes
TAG	TAG – 95% <= 30 Minutes

SEEM Measure

SEEM	Tier I	Tier II
Yes	X	X

SEEM Disaggregation - Analog/Benchmark

SEEM Disaggregation	SEEM Analog/Benchmark
EDI	EDI – 95% <= 30 Minutes
TAG	TAG – 95% <= 30 Minutes

O-2: Acknowledgement Message Completeness

Definition

This measurement provides the percent of Messages/LSRs received via EDI or TAG, which are acknowledged electronically.

Exclusions

Manually submitted LSRs

Business Rules

EDI and TAG send Functional Acknowledgements for all LSRs, which are electronically submitted by a CLEC. For those CLECs using EDI, if more than one CLEC uses the same ordering center, an Acknowledgement Message will be returned to the "Aggregator", however, BellSouth will not be able to determine which specific CLEC this message represented. The Acknowledgement Message is returned prior to the determination of whether the LSR will be partially mechanized or fully mechanized.

Calculation

Acknowledgement Completeness = (a / b) X 100

- a = Total number of Functional Acknowledgements returned in the reporting period for Messages/LSRs electronically submitted by EDI or TAG respectively
- b = Total number of electronically submitted Messages/LSRs received in the reporting period by EDI or TAG respectively

Report Structure

- CLEC Aggregate
- CLEC Specific
- Geographic Scope
  - Region

Note: Acknowledgement message is generated before the system recognizes whether this message (LSR) will be partially or fully mechanized.

Data Retained

Relating to CLEC Experience

- Report Month
- Record of Functional Acknowledgements

Relating to BellSouth Performance

- Not Applicable

SQM Disaggregation - Analog/Benchmark

SQM Level of Disaggregation	SQM Analog/Benchmark
EDI	Benchmark: 99.9%
TAG	Benchmark: 99.5%

SEEM Measure

SEEM	Tier I	Tier II
Yes	X	X

SEEM Disaggregation - Analog/Benchmark

SEEM Disaggregation	SEEM Analog/Benchmark
• EDI	Benchmark: 99.9%
• TAG	Benchmark: 99.5%

O-3: Percent Flow-Through Service Requests (Summary)

Definition

The percentage of Local Service Requests (LSR) and LNP Local Service Requests (LNP LSRs) submitted electronically via the CLEC mechanized ordering process that flow through and reach a status for a FOC to be issued, without manual intervention.

Exclusions

- Fatal Rejects
- Auto Clarification
- Manual Fallout for Percent Flow-Through only
- CLEC System Fallout
- Scheduled OSS Maintenance

Business Rules

The CLEC mechanized ordering process includes all LSRs, including supplements (subsequent versions) which are submitted through one of the three gateway interfaces (TAG, EDI and LENS), that flow through and reach a status for a FOC to be issued, without manual intervention. These LSRs can be divided into two classes of service: Business and Residence, and two types of service: Resale, and Unbundled Network Elements (UNE). The CLEC mechanized ordering process does not include LSRs which are submitted manually (for example, fax and courier) or are not designed to flow through (for example, Manual Fallout.)

Definitions:

Fatal Rejects: Errors that prevent an LSR, submitted electronically by the CLEC, from being processed further. When an LSR is submitted by a CLEC, LEO/LNP Gateway will perform edit checks to ensure the data received is correctly formatted and complete. For example, if the PON field contains an invalid character, LEO/LNP Gateway will reject the LSR and the CLEC will receive a Fatal Reject.

Auto-Clarification: Clarifications that occur due to invalid data within the LSR. LESOG/LAUTO will perform data validity checks to ensure the data within the LSR is correct and valid. For example, if the address on the LSR is not valid according to RSAG, or if the LNP is not available for the NPA NXX requested, the CLEC will receive an Auto-Clarification.

Manual Fallout: Planned Fallout that occur by design. Certain LSRs are designed to fallout of the Mechanized Order Process due to their complexity. These LSRs are manually processed by the LCSC. When a CLEC submits an LSR, LESOG/LAUTO will determine if the LSR should be forwarded to LCSC for manual handling. Following are the categories for Manual Fallout:

1. Complex*
2 Special pricing plans
3. Some Partial migrations (All LNP Partial Migrations)
4. New telephone number not yet posted to BOCRIS
5. Pending order review required
6. CSR inaccuracies such as invalid or missing CSR data in CRIS
7. Expedites (requested by the CLEC)
8. Denials-restore and conversion, or disconnect and conversion orders
9. Class of service invalid in certain states with some types of service
10. Low volume such as activity type “T” (move)
11. More than 25 business lines, or more than 15 loops
12. Transfer of calls option for the CLEC end users
13. Directory Listings (Identions and Captions)
14. LNP Only – Supplement LSRs except supps of O-2 (Due Date Changes) on Req Type CB

*See LSR Flow-Through Matrix in Appendix E for a list of services, including complex services, and whether LSRs issued for the services are eligible to flow through. The matrix is updated automatically when new services are added or the systems are improved to allow a service to flow through. The current version of the Flow-Through Matrix is on the PMAP website (http://pmap.bellsouth.com) in the Documentation/Exhibits folder. Any change in the flow-through order category from flow-through to non-flow-through shall require prior

Commission approval.

Total System Fallout: Errors that require manual review by the LCSC to determine if the error is caused by the CLEC, or is due to BellSouth system functionality. If it is determined the error is caused by the CLEC, the LSR will be sent back to the CLEC for clarification. If it is determined the error is BellSouth caused, the LCSC representative will correct the error, and the LSR will continue to be processed.

Z Status: LSRs that receive a supplemental LSR submission prior to final disposition of the original LSR.

Calculation

Percent Flow Through = a / [b - (c + d + e + f)] X 100

- a = the total number of LSRs that flow through LESOG/LAUTO and reach a status for a FOC to be issued
- b = the number of LSRs passed from LEO/LNP Gateway to LESOG/LAUTO
- c = the number of LSRs that fallout for manual processing
- d = the number of LSRs that are returned to the CLEC for auto clarification
- e = the number of LSRs that are returned to the CLEC from the LCSC due to CLEC clarification
- f = the number of LSRs that receive a Z status.

Percent Achieved Flow Through = a / [b - (c + d + e)] X 100

- a = the number of LSRs that flow through LESOG/LAUTO and reach a status for a FOC to be issued.
- b = the number of LSRs passed from LEO/LNP Gateway to LESOG/LAUTO
- c = the number of LSRs that are returned to the CLEC for auto clarification
- d = the number of LSRs that are returned to the CLEC from the LCSC due to CLEC clarification
- e = the number of LSRs that receive Z status

Report Structure

- CLEC Aggregate
  - Region

Data Retained

Relating to CLEC Experience

- Report Month
- Total Number of LSRs Received, by Interface, by CLEC
  - TAG
  - EDI
  - LENS
- Total Number of Errors by Type, by CLEC
  - Fatal Rejects
  - Auto Clarification
  - CLEC Caused System Fallout
- Total Number of Errors by Error Code
- Total Fallout for Manual Processing

Relating to BellSouth Performance

- Report Month
- Total Number of Errors by Type
  - BellSouth System Error

SQM Disaggregation - Analog/Benchmark

SQM Level of Disaggregation	SQM Analog/Benchmark[a]
• Residence	Benchmark: 95%
• Business	Benchmark: 90%
• UNE - Loops	Benchmark: 85%
• UNE-P	Benchmark: 90%
• LNP	Benchmark: 85%

SEEM Measure

SEEM	Tier I	Tier II
Yes		X

SEEM Disaggregation - Analog/Benchmark

SEEM Disaggregation	SEEM Analog/Benchmark[a]
• Residence	Benchmark: 95%
• Business	Benchmark: 90%
• UNE - Loops	Benchmark: 85%
• UNE-P	Benchmark: 90%
• LNP	Benchmark: 85%

[a] *Benchmarks do not apply to the "Percent Achieved Flow-Through."*

O-4: Percent Flow-Through Service Requests (Detail)

Definition

A detailed list, by CLEC, of the percentage of Local Service Requests (LSR) and LNP Local Service Requests (LNP LSRs) submitted electronically via the CLEC mechanized ordering process that flow through and reach a status for a FOC to be issued, without manual or human intervention.

Exclusions

- Fatal Rejects
- Auto Clarification
- Manual Fallout for Percent Flow-Through only
- CLEC System Fallout
- Scheduled OSS Maintenance

Business Rules

The CLEC mechanized ordering process includes all LSRs, including supplements (subsequent versions) which are submitted through one of the three gateway interfaces (TAG, EDI, and LENS), that flow through and reach a status for a FOC to be issued, without manual intervention. These LSRs can be divided into two classes of service: Business and Residence, and two types of service: Resale, and Unbundled Network Elements (UNE). The CLEC mechanized ordering process does not include LSRs, which are submitted manually (for example, fax and courier) or are not designed to flow through (for example, Manual Fallout.)

Definitions:

Fatal Rejects: Errors that prevent an LSR, submitted electronically by the CLEC, from being processed further. When an LSR is submitted by a CLEC, LEO/LNP Gateway will perform edit checks to ensure the data received is correctly formatted and complete. For example, if the PON field contains an invalid character, LEO/LNP Gateway will reject the LSR and the CLEC will receive a Fatal Reject.

Auto-Clarification: Clarifications that occur due to invalid data within the LSR. LESOG/LAUTO will perform data validity checks to ensure the data within the LSR is correct and valid. For example, if the address on the LSR is not valid according to RSAG, or if the LNP is not available for the NPA NXX requested, the CLEC will receive an Auto-Clarification.

Manual Fallout: Planned Fallout that occur by design. Certain LSRs are designed to fallout of the Mechanized Order Process due to their complexity. These LSRs are manually processed by the LCSC. When a CLEC submits an LSR, LESOG/LAUTO will determine if the LSR should be forwarded to LCSC for manual handling. Following are the categories for Manual Fallout:

1. Complex*
2 Special pricing plans
3. Some Partial migrations (All LNP Partial Migrations)
4. New telephone number not yet posted to BOCRIS
5. Pending order review required
6. CSR inaccuracies such as invalid or missing CSR data in CRIS
7. Expedites (requested by the CLEC)
8. Denials-restore and conversion, or disconnect and conversion orders
9. Class of service invalid in certain states with some types of service
10. Low volume such as activity type “T” (move)
11. More than 25 business lines, or more than 15 loops
12. Transfer of calls option for the CLEC end users
13. Directory Listings (Identions and Captions)
14. LNP Only – Supplement LSRs except supps of O-2 (Due Date Changes) on Req Type CB

*See LSR Flow-Through Matrix in Appendix E for a list of services, including complex services, and whether LSRs issued for the services are eligible to flow through. The matrix is updated automatically when new services are added or the systems are improved to allow a service to flow through. The current version of the Flow-Through Matrix is on the PMAP website (http://pmap.bellsouth.com) in the

Documentation/Exhibits folder. Any change in the flow-through order category from flow-through to non-flow-through shall require prior Commission approval.

Total System Fallout: Errors that require manual review by the LCSC to determine if the error is caused by the CLEC, or is due to BellSouth system functionality. If it is determined the error is caused by the CLEC, the LSR will be sent back to the CLEC for clarification. If it is determined the error is BellSouth caused, the LCSC representative will correct the error, and the LSR will continue to be processed.

Z Status: LSRs that receive a supplemental LSR submission prior to final disposition of the original LSR.

Calculation

Percent Flow Through = a / [b - (c + d + e + f)] X 100

- a = the total number of LSRs that flow through LESOG/LAUTO and reach a status for a FOC to be issued
- b = the number of LSRs passed from LEO/LNP Gateway to LESOG/LAUTO
- c = the number of LSRs that fallout for manual processing
- d = the number of LSRs that are returned to the CLEC for auto clarification
- e = the number of LSRs that are returned to the CLEC from the LCSC due to CLEC clarification
- f = the number of LSRs that receive a Z status.

Percent Achieved Flow Through = a / [b - (c + d + e)] X 100

- a = the number of LSRs that flow through LESOG/LAUTO and reach a status for a FOC to be issued
- b = the number of LSRs passed from LEO/LNP Gateway to LESOG/LAUTO
- c = the number of LSRs that are returned to the CLEC for auto clarification
- d = the number of LSRs that are returned to the CLEC from the LCSC due to CLEC clarification
- e = the number of LSRs that receive Z status

Report Structure

Provides the flow through percentage for each CLEC (by alias designation) submitting LSRs through the CLEC mechanized ordering process. The report provides the following:

- CLEC (by alias designation)
- Number of fatal rejects
- Mechanized interface used
- Total mechanized LSRs
- Total manual fallout
- Number of auto clarifications returned to CLEC
- Number of validated LSRs
- Number of BellSouth caused fallout
- Number of CLEC caused fallout
- Number of Service Orders Issued
- Base calculation
- CLEC error excluded calculation
- Region

Data Retained

Relating to CLEC Experience

- Report Month
- Total Number of LSRs Received, by Interface, by CLEC
  - TAG
  - EDI
  - LENS
- Total Number of Errors by Type, by CLEC
  - Fatal Rejects
  - Auto Clarification

- CLEC Errors
- Total Number of Errors by Error Code
- Total Fallout for Manual Processing

Relating to BellSouth Performance

- Report Month
- Total Number of Errors by Type
  - BellSouth System Error

SQM Disaggregation - Analog/Benchmark

SQM Level of Disaggregation	SQM Analog/Benchmark[a]
Residence	Benchmark: 95%
Business	Benchmark: 90%
UNE - Loops	Benchmark: 85%
UNE-P	Benchmark: 90%
LNP	Benchmark: 85%

SEEM Measure

SEEM	Tier I	Tier II
Yes	X	

SEEM Disaggregation - Analog/Benchmark

SEEM Disaggregation	SEEM Analog/Benchmark
Residence	Benchmark: 95%
Business	Benchmark: 90%
UNE- Loops	Benchmark: 85%
UNE-P	Benchmark: 90%
LNP	Benchmark: 85%

[a] *Benchmarks do not apply to the "Percent Achieved Flow-Through."*

Flow-Through Error Analysis

Definition

An analysis of each error type (by error code) that was experienced by the LSRs that did not flow through or reached a status for a FOC to be issued.

Exclusions

Each Error Analysis is error code specific, therefore exclusions are not applicable.

Business Rules

The CLEC mechanized ordering process includes all LSRs, including supplements (subsequent versions) which are submitted through one of the three gateway interfaces (TAG, EDI, and LENS), that flow through and reach a status for a FOC to be issued. The CLEC mechanized ordering process does not include LSRs which are submitted manually (for example, fax and courier).

Calculation

Total for each error type

Report Structure

Provides an analysis of each error type (by error code). The report is in descending order by count of each error code and provides the following:

- Error Type (by error code)
- Count of each error type
- Percent of each error type
- Cumulative percent
- Error Description
- CLEC Caused Count of each error code
- Percent of aggregate by CLEC caused count
- Percent of CLEC caused count
- BellSouth Caused Count of each error code
- Percent of aggregate by BellSouth caused count
- Percent of BellSouth by BellSouth caused count.

Data Retained

Relating to CLEC Experience

- Report Month
- Total Number of LSRs Received
- Total Number of Errors by Type (by Error Code)
  - CLEC caused error

Relating to BellSouth Performance

- Report Month
- Total Number of Errors by Type (by Error Code)
  - BellSouth System Error

SQM Disaggregation - Analog/Benchmark

SQM Level of Disaggregation	SQM Analog/Benchmark
• Not Applicable	Not Applicable

SEEM Measure

SEEM	Tier I	Tier II
No		

SEEM Disaggregation - Analog/Benchmark

SEEM Disaggregation	SEEM Analog/Benchmark
• Not Applicable	Not Applicable

O-6: CLEC LSR Information

Definition

A list with the flow through activity of LSRs by CC, PON and Ver, issued by each CLEC during the report period.

Exclusions

- Fatal Rejects
- LSRs Submitted Manually

Business Rules

The CLEC mechanized ordering process includes all LSRs, including supplements (subsequent versions) which are submitted through one of the three gateway interfaces (TAG, EDI, and LENS), that flow through and reach a status for a FOC to be issued. The CLEC mechanized ordering process does not include LSRs which are submitted manually (for example, fax and courier).

Calculation

Not Applicable

Report Structure

Provides a list with the flow through activity of LSRs by CC, PON and Ver, issued by each CLEC during the report period with an explanation of the columns and content. This report is available on a CLEC specific basis. The report provides the following for each LSR.

- CC
- PON
- Ver
- Timestamp
- Type
- Err #
- Note or Error Description

Data Retained

Relating to CLEC Experience

- Report Month
- Record of LSRs Received by CC, PON and Ver
- Record of Timestamp, Type, Err # and Note or Error Description for Each LSR by CC, PON and Ver

Relating to BellSouth Performance

- Not Applicable

SQM Disaggregation - Analog/Benchmark

SQM Level of Disaggregation	SQM Analog/Benchmark
Not Applicable	Not Applicable

SEEM Measure

SEEM	Tier I	Tier II
No		

SEEM Disaggregation - Analog/Benchmark

SEEM Disaggregation	SEEM Analog/Benchmark
• Not Applicable	Not Applicable

O-7: Percent Rejected Service Requests

Definition

Percent Rejected Service Request is the percent of total Service Requests [(Local Service Requests (LSRs) or Access Service Requests (ASRs)] received which are rejected due to error or omission. Service Requests are considered valid when they are submitted by the CLEC and pass edit checks to insure the data received is correctly formatted and complete.

Exclusions

- Service Requests canceled by the CLEC prior to being rejected/clarified.
- Fatal Rejects
- Order Activities of BellSouth or the CLEC associated with internal or administrative use of local services (Record Orders, Test Orders, etc.) where identifiable
- LSRs identified as "Projects"

Business Rules

Fully Mechanized: An LSR/Service Request is considered "rejected" when it is submitted electronically but does not pass edit checks in the ordering systems (EDI, LENS, TAG, LESOG, LNP Gateway, LAUTO) and is returned to the CLEC without manual intervention. There are two types of "Rejects" in the Mechanized category:

A **Fatal Reject** occurs when a CLEC attempts to electronically submit an LSR but required fields are either not populated or incorrectly populated and the request is returned to the CLEC before it is considered a valid LSR.

Fatal rejects are reported in a separate column, and for informational purposes ONLY. They are not considered in the calculation of the percent of total LSRs rejected or the total number of rejected LSRs.

An **Auto Clarification** occurs when a valid LSR is electronically submitted but rejected from LESOG or LAUTO because it does not pass further edit checks for order accuracy.

Partially Mechanized: A valid LSR, which is electronically submitted (via EDI, LENS, TAG) but cannot be processed electronically and "falls out" for manual handling. It is then put into "clarification" and sent back (rejected) to the CLEC.

Non-Mechanized: LSRs which are faxed or mailed to the LCSC for processing and "clarified" (rejected) back to the CLEC by the BellSouth service representative.

Interconnection Trunks: Interconnection Trunks are ordered on Access Service Requests (ASRs). ASRs are submitted to and processed by the Local Interconnection Service Center (LISC). Trunk data is reported as a separate category.

Calculation

Percent Rejected Service Requests = (a / b) X 100

- a = Total Number of Service Requests Rejected in the reporting period
- b = Total Number of Service Requests Received in the reporting period

Report Structure

- Fully Mechanized, Partially Mechanized, Non-Mechanized
- Trunks
- CLEC Specific
- CLEC Aggregate
- Geographic Scope
  - State

- Region
- Product Specific percent Rejected
- Total percent Rejected

Data Retained

Relating to CLEC Experience

- Report Month
- Total Number of LSRs
- Total Number of Rejects
- State and Region
- Total Number of ASRs (Trunks)

Relating to BellSouth Performance

- Not Applicable

SQM Disaggregation - Analog/Benchmark

SQM Level of Disaggregation	SQM Analog/Benchmark
Mechanized, Partially Mechanized and Non-Mechanized	
Resale – Residence	Diagnostic
Resale - Business	
Resale – Design (Special)	
Resale PBX	
Resale Centrex	
Resale ISDN	
LNP (Standalone)	
INP (Standalone)	
2W Analog Loop Design	
2W Analog Loop Non-Design	
2W Analog Loop with INP Design	
2W Analog Loop with INP Non-Design	
2W Analog Loop with LNP Design	
2W Analog Loop with LNP Non-Design	
UNE Digital Loop < DS1	
UNE Digital Loop >= DS1	
UNE Loop + Port Combinations	
UNE Combination Other	
UNE ISDN Loop	
UNE Other Design	
UNE Other Non-Design	
UNE Line Splitting	
EELs	
Switch Ports	
UNE xDSL (ADSL, HDSL, UCL)	
Line Sharing	
Local Interoffice Transport	
Local Interconnection Trunks	

SEEM Measure

SEEM	Tier I	Tier II
No		

SEEM Disaggregation - Analog/Benchmark

SEEM Disaggregation	SEEM Analog/Benchmark
• Not Applicable	Not Applicable

O-8: Reject Interval

Definition

Reject Interval is the average reject time from receipt of Service Requests [(Local Service Requests (LSRs) or Access Service Requests (ASRs)] to the distribution of a Reject. Service Requests are considered valid when they are submitted by the CLEC and pass edit checks to insure the data received is correctly formatted and complete. When there are multiple rejects on a single version of an LSR, the first reject issued is used for the calculation of the interval duration.

Exclusions

- Service Requests canceled by CLEC prior to being rejected/clarified.
- Fatal Rejects
- Designated Holidays are excluded from the interval calculation for partially mechanized and non-mechanized LSRs/ASRs only.
- LSRs which are identified and classified as "Projects"

  Non-business hours for Partially Mechanized and Non-Mechanized LSRs are excluded from the interval calculation. The excluded time is the time outside of normal operations which can be found at the following website: http://www.interconnection.bellsouth.com/centers/html/lcsc.html

  Local Interconnection Service Center (LISC) - Monday through Friday 4:30 PM until 8:00 AM
  From 4:30 PM Friday until 8:00 AM Monday

  The hours excluded will be altered to reflect changes in the Center operating hours. The LCSC will accept faxed LSRs only during posted hours of operation.

  The interval will be the amount of time accrued from receipt of the LSR until normal closing of the center if an LSR is worked using overtime hours.

  In the case of a Partially Mechanized LSR received and worked after normal business hours, the interval will be set at one (1) minute.

Business Rules

The Reject interval is determined for each rejected LSR processed during the reporting period. The Reject interval is the elapsed time from when BellSouth receives LSR (date and time stamps in EDI or TAG) until that LSR is rejected back to the CLEC. Elapsed time for each LSR (date and time stamps in EDI or TAG) is accumulated for each reporting dimension. The accumulated time for each reporting dimension is then divided by the associated total number of rejected LSRs to produce the reject interval distribution.

Fully Mechanized: The elapsed time from receipt of a valid electronically submitted LSR (date and time stamp in EDI translator or TAG) until the LSR is rejected (date and time stamp or reject in EDI translator, or TAG). Auto Clarifications are considered in the Fully Mechanized category.

Partially Mechanized: The elapsed time from receipt of a valid electronically submitted LSR (date and time stamp in EDI translator or TAG) until it falls out for manual handling. The stop time on partially mechanized LSRs is when the LCSC Service Representative clarifies the LSR back to the CLEC via EDI translator, or TAG.

Non-Mechanized: The elapsed time from receipt of a valid LSR (date and time stamp of FAX or date and time mailed LSR is received in the LCSC) until notice of the reject (clarification) is returned to the CLEC via LON.

Interconnection Trunks: Interconnection Trunks are ordered on Access Service Requests (ASRs). ASRs are submitted to and processed by the Local Interconnection Service Center (LISC). Trunk data is reported as a separate category.

Calculation

Reject Interval = (a - b)

- a = Date and Time of Service Request Rejection
- b = Date and Time of Service Request Receipt

Average Reject Interval = (c / d)

- c = Sum of all Reject Intervals
- d = Number of Service Requests Rejected in Reporting Period

Reject Interval Distribution = (e / f) X 100

- e = Service Requests Rejected in reported interval
- f = Total Number of Service Requests Rejected in Reporting Period

Report Structure

- Fully Mechanized, Partially Mechanized, Non-Mechanized
- CLEC Specific
- CLEC Aggregate
- Geographic Scope
  - State
  - Region
- Fully Mechanized:
  0 - <= 4 minutes
  > 4 - <= 8 minutes
  >8 - <= 12 minutes
  > 12 - <= 60 minutes
  0 - <= 1 hour
  > 1 - <= 4 hours
  > 4 - <= 8 hours
  > 8 - <= 12 hours
  > 12 - <= 16 hours
  > 16 - <= 20 hours
  > 20 - <= 24 hours
  > 24 hours
- Partially Mechanized:
  0 - <= 1 hour
  > 1 - <= 4 hours
  > 4 - <= 8 hours
  > 8 - <= 10 hours
  0 - <= 10 hours
  > 10 - <= 18 hours
  0 - <= 18 hours
  > 18 - <= 24 hours
  > 24 hours
- Non-mechanized:
  0 - <= 1 hour
  > 1 - <= 4 hours
  > 4 - <= 8 hours
  > 8 - <= 12 hours
  > 12 - <= 16 hours
  > 16 - <= 20 hours
  > 20 - <= 24 hours
  0 - <= 24 hours
  > 24 hours
- Trunks:

0 - <= 36 hours
> 36 hours
- Average Interval is reported in business hours.

Data Retained

Relating to CLEC Experience

- Report Month
- Reject Interval
- Total Number of LSRs
- Total Number of Rejects
- State and Region
- Total Number of ASRs (Trunks)

Relating to BellSouth Performance

- Not Applicable

SQM Disaggregation - Analog/Benchmark

SQM Level of Disaggregation	SQM Analog/Benchmark
Resale – Residence	Fully Mechanized: 97% <= 1 Hour
Resale – Business	Partially Mechanized: 95% <= 10 Hours
Resale – Design (Special)	Non Mechanized: 95% <= 24 Hours
Resale PBX	
Resale Centrex	
Resale ISDN	
LNP (Standalone)	
INP (Standalone)	
2W Analog Loop Design	
2W Analog Loop Non-Design	
2W Analog Loop with INP Design	
2W Analog Loop with INP Non-Design	
2W Analog Loop with LNP Design	
2W Analog Loop with LNP Non-Design	
UNE Digital Loop < DS1	
UNE Digital Loop >= DS1	
UNE Loop + Port Combinations	
UNE Combination Other	
UNE ISDN Loop	
UNE Other Design	
UNE Other Non-Design	
UNE Line Splitting	
EELs	
Switch Ports	
UNE xDSL (ADSL, HDSL, UCL)	
Line Sharing	
Local Interoffice Transport	
Local Interconnection Trunks	Trunks: 95% <= 36 Hours

SEEM Measure

SEEM	Tier I	Tier II
Yes	X	X

SEEM Disaggregation - Analog/Benchmark

SEEM Disaggregation	SEEM Analog/Benchmark
• Fully Mechanized	97% <= 1 hour
• Partially Mechanized	95% <= 10 hours
• Non-Mechanized	95% <= 24 hours
• Local Interconnection Trunks	95% <= 36 hours

O-9: Firm Order Confirmation Timeliness

Definition

Interval for Return of a Firm Order Confirmation (FOC Interval) is the average response time from receipt of valid LSR or ASR to distribution of a Firm Order Confirmation. The interval will include an electronic facilities check.

Exclusions

- Service Requests canceled by CLEC prior to being confirmed.
- Designated Holidays are excluded from the interval calculation for partially mechanized and non-mechanized LSRs/ASRs only.
- LSRs which are identified and classified as "Projects"

  Non-business hours for Partially Mechanized and Non-Mechanized LSRs are excluded from the interval calculation. The excluded time is the time outside of normal operations which can be found at the following website: http://www.interconnection.bellsouth.com/centers/html/lcsc.html

  For ASRs processed in the Local Interconnection Service Center (LISC) - From 4:30 PM All hours outside of Monday – Friday 8:00 AM – 4:30 PM CST, should be excluded.

  The hours excluded will be altered to reflect changes in the Center operating hours. The Centers will accept faxed LSRs only during posted hours of operation.

  The interval will be the amount of time accrued from receipt of the LSR until normal closing of the center if an LSR is worked using overtime hours.

  In the case of a Partially Mechanized LSR received and worked after normal business hours, the interval will be set at one (1) minute.

Business Rules

Fully Mechanized: The elapsed time from receipt of a valid electronically submitted LSR (date and time stamp in EDI or TAG) until the LSR is processed, appropriate service orders are generated and a Firm Order Confirmation is returned to the CLEC via EDI translator or TAG.

Partially Mechanized: The elapsed time from receipt of a valid electronically submitted LSR (date and time stamp in EDI, or TAG) which falls out for manual handling until appropriate service orders are issued by a BellSouth service representative via Direct Order Entry (DOE) or Service Order Negotiation Generation System (SONGS) to SOCS and a Firm Order Confirmation is returned to the CLEC via EDI translator, or TAG.

Non-Mechanized: The elapsed time from receipt of a valid paper LSR (date and time stamp of FAX or date and time paper LSRs received in LCSC) until appropriate service orders are issued by a BellSouth service representative via Direct Order Entry (DOE) or Service Order Negotiation Generation System (SONGS) to SOCS and a Firm Order Confirmation is sent to the CLEC via LON.

Interconnection Trunks: Interconnection Trunks are ordered on Access Service Requests (ASRs). ASRs are submitted to and processed by the Local Interconnection Service Center (LISC). The elapsed time is measured from receipt of a valid ASR (date and time stamp of a FAX or paper ASR received in the LISC) until the appropriate orders are issued by a BellSouth representative and a FOC issued in EXACT. Trunk data is reported as a separate category.

Note: When multiple FOCs occur on a single version of an LSR, the first FOC is used to measure the interval.

Calculation

Firm Order Confirmation Interval = (a - b)

- a = Date and Time of Firm Order Confirmation
- b = Date and Time of Service Request Receipt

Average FOC Interval = (c / d)

- c = Sum of all Firm Order Confirmation Times
- d = Number of Service Requests Confirmed in Reporting Period

FOC Interval Distribution = (e / f) X 100

- e = Service Requests Confirmed in Designated Interval
- f = Total Service Requests Confirmed in the Reporting Period

Report Structure

- Fully Mechanized, Partially Mechanized, Non-Mechanized
  - CLEC Specific
  - CLEC Aggregate
- Geographic Scope
  - State
  - Region
- Fully Mechanized:
  0 - <= 15 minutes
  > 15 - <= 30 minutes
  > 30 - <= 45 minutes
  > 45 - <= 60 minutes
  > 60 - <= 90 minutes
  > 90 - <= 120 minutes
  > 120 - <= 180 minutes
  0 - <= 3 hours
  > 3 - <= 6 hours
  > 6 - <= 12 hours
  > 12 - <= 24 hours
  > 24 - <= 48 hours
  > 48 hours
- Partially Mechanized:
  0 - <= 4 hours
  > 4 - <= 8 hours
  > 8 - <= 10 hours
  0 - <= 10 hours
  > 10 - <= 18 hours
  0 - <= 18 hours
  > 18 - <= 24 hours
  > 24 - <= 48 hours
  > 48 hours
- Non-mechanized:
  0 - <= 4 hours
  > 4 - <= 8 hours
  > 8 - <= 12 hours
  > 12 - <= 16 hours
  0 - <= 24 hours
  > 16 - <= 20 hours
  > 20 - <= 24 hours
  > 24 - <= 36 hours
  0 - <= 36 hours

> 36 - <= 48 hours
> 48 hours

- Trunks:
  0 - <= 48 hours
  > 48 hours
- Average Interval is reported in business hours

Data Retained

Relating to CLEC Experience

- Report Month
- Interval for FOC
- Total Number of LSRs
- State and Region
- Total Number of ASRs (Trunks)

Relating to BellSouth Performance

- Not Applicable

SQM Disaggregation - Analog/Benchmark

SQM Level of Disaggregation	SQM Analog/Benchmark
Resale – Residence	Fully Mechanized: 95% <= 3 Hours
Resale – Business	Partially Mechanized: 95% <= 10 Hours
Resale – Design (Special)	Non-Mechanized: 95% <= 24 Hours
Resale PBX	
Resale Centrex	
Resale ISDN	
LNP (Standalone)	
INP (Standalone)	
2W Analog Loop Design	
2W Analog Loop Non-Design	
2W Analog Loop with INP Design	
2W Analog Loop with INP Non-Design	
2W Analog Loop with LNP Design	
2W Analog Loop with LNP Non-Design	
UNE Digital Loop < DS1	
UNE Digital Loop >= DS1	
UNE Loop + Port Combinations	
UNE Combination Other	
UNE ISDN Loop	
UNE Other Design	
UNE Other Non-Design	
UNE Line Splitting	
EELs	
Switch Ports	
UNE xDSL (ADSL, HDSL, UCL)	
Line Sharing	
Local Interoffice Transport	
Local Interconnection Trunks	Trunks: 95% <= 48 Hours

SEEM Measure

SEEM	Tier I	Tier II
Yes	X	X

SEEM Disaggregation - Analog/Benchmark

SEEM Disaggregation	SEEM Analog/Benchmark
• Fully Mechanized	95% <= 3 Hours
• Partially Mechanized	95% <= 10 Hours
• Non-Mechanized	95% <= 24 Hours
• Local Interconnection Trunks	95% <= 48 Hours

O-10: Service Inquiry with LSR Firm Order Confirmation (FOC) Response Time Manual[1]

Definition

This report measures the interval and the percent within the interval from the submission of a Service Inquiry (SI) with Firm Order LSR to the distribution of a Firm Order Confirmation (FOC).

Exclusions

- Designated Holidays are excluded from the interval calculation.
- Weekend hours from 5:00 PM Friday until 8:00AM Monday are excluded from the interval calculation of the Service Inquiry.
- Canceled Requests
- Electronically Submitted Requests
- Non-business hours for Partially Mechanized and Non-Mechanized LSRs are excluded from the interval calculation. The excluded time is the time outside of normal operations which can be found at the following website: http//www.interconnection.bellsouth.com/centers/html/lcsc.html

Business Rules

This measurement combines four intervals:

1. From receipt of a valid Service Inquiry with LSR to hand off to the Service Advocacy Center (SAC) for Loop 'Look-up'.
2. From SAC start date to SAC complete date.
3. From SAC complete date to the Complex Resale Support Group (CRSG) complete date with hand off to LCSC.
4. From receipt of a valid SI/LSR in the LCSC to Firm Order Confirmation.

(A valid Service Inquiry is an inquiry that has all required fields populated correctly and has not been returned for clarification.)

Calculation

FOC Timeliness Interval with SI = (a - b)

- a = Date and Time Firm Order Confirmation (FOC) for SI with LSR returned to CLEC
- b = Date and Time SI with LSR received

Average Interval = (c / d)

- c = Sum of all FOC Timeliness Intervals with SI
- d = Total number of SIs with LSRs received in the reporting period

Percent Within Interval = (e / f) X 100

- e = Total number of Service Inquiries with LSRs received by the CRSG to distribution of FOC by the Local Carrier Service Center (LCSC)
- f = Total number of Service Inquiries with LSRs received in the reporting period

Report Structure

- CLEC Aggregate
- CLEC Specific
- Geographic Scope
  - State
  - Region

[1] *See O-9 for FOC Timeliness*

- Intervals
  0 – <= 3 days
  > 3 – <= 5 days
  0 – <=5 days
  > 5 – <= 7 days
  > 7 – <= 10 days
  > 10 – <= 15 days
  >15 days
- Average Interval measured in days

Data Retained

Relating to CLEC Experience

- Report Month
- Total Number of Requests
- SI Intervals
- State and Region

Relating to BellSouth Performance

- Not Applicable

SQM Disaggregation - Analog/Benchmark

SQM Level of Disaggregation	SQM Analog/Benchmark
• xDSL (includes UNE unbundled ADSL, HDSL and UNE Unbundled Copper Loops)	95% Returned <= 5 Business Days
• Unbundled Interoffice Transport	

SEEM Measure

SEEM	Tier I	Tier II
No		

SEEM Disaggregation - Analog/Benchmark

SEEM Disaggregation	SEEM Analog/Benchmark
• Not Applicable	Not Applicable

O-11: Firm Order Confirmation and Reject Response Completeness

Definition

A response is expected from BellSouth for every Local Service Request transaction (version). Firm Order Confirmation and Reject Response Completeness is the corresponding number of Local Service Requests received to the combination of Firm Order Confirmation and Reject Responses.

Exclusions

- Service Requests canceled by the CLEC prior to FOC or Rejected/Clarified
- Fatal Rejects
- LSRs identified as "Projects"

Business Rules

Mechanized – The number of FOCs or Auto Clarifications sent to the CLEC from EDI, or TAG in response to electronically submitted LSRs.

Partially Mechanized – The number of FOCs or Rejects sent to the CLEC from EDI, or TAG in response to electronically submitted LSRs which fall out for manual handling by the LCSC personnel.

Non-Mechanized: The number of FOCs or Rejects sent to the CLECs by FAX server.

Interconnection Trunks: Interconnection Trunks are ordered on Access Service Requests (ASRs). ASRs are submitted to and processed by the Local Interconnection Service Center (LISC). Trunk data is reported as a separate category.

For CLEC Results:

Percent responses is determined by computing the number of Firm Order Confirmations and Rejects transmitted by BellSouth and dividing by the number of Local Service Requests (all versions) received in the reporting period.

Calculation

Firm Order Confirmation / Reject Response Completeness = (a / b) X 100

- a = Total Number of Service Requests for which a Firm Order Confirmation or Reject is Sent
- b = Total Number of Service Requests Received in the Report Period

Report Structure

Fully Mechanized, Partially Mechanized, Non-Mechanized and Interconnection Trunks

- State and Region
- CLEC Specific
- CLEC Aggregate

Data Retained

Relating to CLEC Experience

- Report Month
- Total Number of LSRs
- Total Number of rejects

- Total Number of ASRs (Trunks)
- Total Number of FOCs

Relating to BellSouth Performance

- Not Applicable

SQM Disaggregation - Analog/Benchmark

SQM Level of Disaggregation	SQM Analog/Benchmark
Resale Residence	95% Returned
Resale Business	
Resale Design (Special)	
Resale PBX	
Resale Centrex	
Resale ISDN	
LNP (Standalone)	
INP (Standalone)	
2W Analog Loop Design	
2W Analog Loop Non-Design	
2W Analog Loop with INP Design	
2W Analog Loop with INP Non-Design	
2W Analog Loop with LNP Design	
2W Analog Loop with LNP Non-Design	
UNE Digital Loop < DS1	
UNE Digital Loop >= DS1	
UNE Loop + Port Combinations	
UNE Combination Other	
UNE ISDN Loop	
UNE Other Design	
UNE Other Non-Design	
UNE Line Splitting	
EELs	
Switch Ports	
UNE xDSL (ADSL, HDSL, UCL)	
Line Sharing	
Local Interoffice Transport	
Local Interconnection Trunks	

SEEM Measure

SEEM	Tier I	Tier II
Yes	X	X

SEEM Disaggregation - Analog/Benchmark

SEEM Disaggregation	SEEM Analog/Benchmark
Fully Mechanized	95% Returned
Partially Mechanized	
Non-Mechanized	
Local Interconnection Trunks	

O-12: Speed of Answer in Ordering Center

Definition

Measures the average time a customer is in queue.

Exclusions

None

Business Rules

The clock starts when the appropriate option is selected (i.e., 1 for Resale Consumer, 2 for Resale Multiline, and 3 for UNE-LNP, etc.) and the call enters the queue for that particular group in the LCSC. The clock stops when a BellSouth service representative in the LCSC answers the call. The speed of answer is determined by measuring and accumulating the elapsed time from the entry of a CLEC call into the BellSouth automatic call distributor (ACD) until a service representative in BellSouth's Local Carrier Service Center (LCSC) answers the CLEC call.

Calculation

Speed of Answer in Ordering Center = (a / b)

- a = Total seconds in queue
- b = Total number of calls answered in the Reporting Period

Report Structure

Aggregate

- CLEC – Local Carrier Service Center
- BellSouth
  - Business Service Center
- Geographic Scope
  - Region

Data Retained

Relating to CLEC Experience

- Mechanized Tracking Through LCSC Automatic Call Distributor

Relating to BellSouth Performance

- Mechanized Tracking Through BellSouth Retail Center Support System

SQM Disaggregation - Analog/Benchmark

SQM Level of Disaggregation	SQM Analog/Benchmark
Aggregate	
• CLEC – Local Carrier Service Center	Parity with Retail (Business Service Center)

SEEM Measure

SEEM	Tier I	Tier II
Yes		X

SEEM Disaggregation - Analog/Benchmark

SEEM Disaggregation	SEEM Analog/Benchmark
• CLEC - Local Carrier Service Center	Parity with Retail (Business Service Center)

Section 3: Provisioning

P-1: Mean Held Order Interval & Distribution Intervals

Definition

When delays occur in completing CLEC orders, the average period that CLEC orders are held for BellSouth reasons, pending a delayed completion, should be no worse for the CLEC when compared to BellSouth delayed orders. Calculation of the interval is the total days orders are held and pending but not completed that have passed the currently committed due date; divided by the total number of held orders. This report is based on orders still pending, held and past their committed due date. The distribution interval is based on the number of orders held and pending but not completed over 15 and 90 days. (Orders reported in the >90 day interval are also included in the >15 day interval.)

Exclusions

- Order Activities of BellSouth or the CLEC associated with internal or administrative use of local services (Record Orders, Listing Orders, Test Orders, etc.) Test order types may be C, N, R, or T
- Disconnect (D) & From (F) orders
- Orders with Appointment Code of 'A', i.e., orders for locations requiring special construction including locations where no address exists and a technician must make a field visit to determine how to get facilities to the location.

Business Rules

Mean Held Order Interval: This metric is computed at the close of each report period. The held order interval is established by first identifying all orders, at the close of the reporting interval, that both have not been reported as completed in SOCS and have passed the currently committed due date for the order and identifying all orders that have been reported as completed in SOCS after the currently committed due date for the order. For each such order, the number of calendar days between the earliest committed due date on which BellSouth had a company missed appointment and the close of the reporting period is established and represents the held order interval for that particular order. The held order interval is accumulated by the standard groupings, unless otherwise noted, and the reason for the order being held. The total number of days accumulated in a category is then divided by the number of held orders within the same category to produce the mean held order interval. The interval is by calendar days with no exclusions for Holidays or Sundays.

CLEC Specific reporting is by type of held order (facilities, equipment, other), total number of orders held, and the total and average days.

Held Order Distribution Interval: This measure provides data to report total days held and identifies these in categories of >15 days and > 90 days. (Orders counted in >90 days are also included in > 15 days).

Calculation

Mean Held Order Interval = a / b

- a = Sum of held-over-days for all Past Due Orders Held with a BellSouth Missed Appointment from the earliest BellSouth missed appointment
- b = Number of Past Due Orders Held and Pending But Not Completed and past the committed due date

Held Order Distribution Interval (for each interval) = (c / d) X 100

- c = # of Orders Held for >= 15 days or # of Orders Held for >= 90 days
- d = Total # of Past Due Orders Held and Pending But Not Completed)

Report Structure

- CLEC Specific
- CLEC Aggregate
- BellSouth Aggregate
- Circuit Breakout < 10, >= 10 (except trunks)
- Dispatch/Non-Dispatch
- Geographic Scope
  - State
  - Region

Data Retained

Relating to CLEC Experience

- Report Month
- CLEC Order Number and PON (PON)
- Order Submission Date (TICKET_ID)
- Committed Due Date (DD)
- Service Type (CLASS_SVC_DESC)
- Hold Reason
- Total Line/Circuit Count
- Geographic Scope

Note: Code in parentheses is the corresponding header found in the raw data file.

Relating to BellSouth Performance

- Report Month
- BellSouth Order Number
- Order Submission Date
- Committed Due Date
- Service Type
- Hold Reason
- Total Line/Circuit Count
- Geographic Scope

SQM Disaggregation - Analog/Benchmark

SQM Level of Disaggregation	SQM Analog/Benchmark
Resale Residence	Retail Residence
Resale Business	Retail Business
Resale Design	Retail Design
Resale PBX	Retail PBX
Resale Centrex	Retail Centrex
Resale ISDN	Retail ISDN
LNP (Standalone)	Retail Residence and Business (POTS)
INP (Standalone)	Retail Residence and Business (POTS)
2W Analog Loop Design	Retail Residence and Business Dispatch
2W Analog Loop Non-Design	Retail Residence and Business – (POTS Excluding Switch-Based Orders)
2W Analog Loop with LNP - Design	Retail Residence and Business Dispatch
2W Analog Loop with LNP- Non-Design	Retail Residence and Business – (POTS Excluding Switch-Based Orders)
2W Analog Loop with INP-Design	Retail Residence and Business Dispatch
2W Analog Loop with INP-Non-Design	Retail Residence and Business – (POTS Excluding Switch-Based Orders)

- UNE Digital Loop < DS1 ..... Retail Digital Loop < DS1
- UNE Digital Loop >= DS1 ..... Retail Digital Loop >= DS1
- UNE Loop + Port Combinations ..... Retail Residence and Business
  - Dispatch In ..... - Dispatch
  - Switch Based ..... - Switched Based
- UNE Switch Ports ..... Retail Residence and Business (POTS)
- UNE Combo Other ..... Retail Residence, Business and Design Dispatch
- UNE xDSL (HDSL, ADSL and UCL) ..... ADSL Provided to Retail
- UNE ISDN (Includes UDC) ..... Retail ISDN - BRI
- UNE Line Sharing ..... ADSL Provided to Retail
- UNE Other Design ..... Retail Design
- UNE Other Non-Design ..... Retail Residence and Business
- Local Transport (Unbundled Interoffice Transport) ..... Retail DS1/DS3 Interoffice
- Local Interconnection Trunks ..... Parity with Retail
- UNE Line Splitting ..... ADSL to Retail
- EELs ..... Retail DS1/DS3

SEEM Measure

SEEM	Tier I	Tier II
No		

SEEM Disaggregation - Analog/Benchmark

SEEM Disaggregation	SEEM Analog/Benchmark
Not Applicable	Not Applicable

P-2: Average Jeopardy Notice Interval & Percentage of Orders Given Jeopardy Notices

(Deleted)

P-2A: Jeopardy Notice Interval

Definition

When BellSouth can determine in advance that a committed due date is in jeopardy for facility delay, it will provide advance notice to the CLEC.

The interval is from the date/time the notice is released to the CLEC/BellSouth systems until 5pm on the due date of the order.

Exclusions

- Orders held for CLEC end user reasons
- Disconnect (D) and From (F) orders
- Orders with Jeopardy Notice when jeopardy is identified on the due date. This exclusion only applies when the technician on premises has attempted to provide service but must refer to Engineer or Cable Repair for facility jeopardy.
- Orders issued with a due date of < = 48 hours.

Business Rules

When BellSouth can determine in advance that a committed due date is in jeopardy for facility delay, it will provide advance notice to the CLEC. The number of committed orders in a report period is the number of orders that have a due date in the reporting period. Jeopardy notices for interconnection trunk results are usually zero as these trunks seldom experience facility delays. The Committed Due Date is considered the Confirmed Due Date. This report measures dispatched orders only. If an order is originally sent as non-dispatch and it is determined there is a facility delay, the order is converted to a dispatch code so the facility problem can be corrected. It will remain coded dispatched until completion.

Calculation

Jeopardy Interval = a - b

- a = Date and Time of Scheduled Due Date on Service Order
- b = Date and Time of Jeopardy Notice

Average Jeopardy Interval = c / d

- c = Sum of all Jeopardy Intervals
- d = Number of Orders Notified of Jeopardy in Reporting Period

Report Structure

- CLEC Specific
- CLEC Aggregate
- BellSouth Aggregate
- Mechanized Orders
- Non-Mechanized Orders
- Dispatch/Non-Dispatch
- Geographic Scope
  - State
  - Region

Data Retained

Relating to CLEC Experience

- Report Month
- CLEC Order Number and PON

- Date and Time Jeopardy Notice Sent
- Committed Due Date
- Service Type

Relating to BellSouth Performance

- Report Month
- BellSouth Order Number
- Date and Time Jeopardy Notice Sent
- Committed Due Date
- Service Type

SQM Disaggregation - Analog/Benchmark

SQM Level of Disaggregation	SQM Analog/Benchmark
Resale Residence	95% > = 48 hours
Resale Business	95% > = 48 hours
Resale Design	95% > = 48 hours
Resale PBX	95% > = 48 hours
Resale Centrex	95% > = 48 hours
Resale ISDN	95% > = 48 hours
LNP (Standalone)	95% > = 48 hours
INP (Standalone)	95% > = 48 hours
2W Analog Loop Design	95% > = 48 hours
2W Analog Loop Non-Design	95% > = 48 hours
2W Analog Loop with LNP - Design	95% > = 48 hours
2W Analog Loop with LNP- Non-Design	95% > = 48 hours
2W Analog Loop with INP-Design	95% > = 48 hours
2W Analog Loop with INP-Non-Design	95% > = 48 hours
UNE Digital Loop < DS1	95% > = 48 hours
UNE Digital Loop >= DS1	95% > = 48 hours
UNE Loop + Port Combinations	95% > = 48 hours
- Dispatch In	- Dispatch In
- Switch Based	- Switch Based
UNE Switch Ports	95% > = 48 hours
UNE Combo Other	95% > = 48 hours
UNE xDSL (HDSL, ADSL and UCL)	95% > = 48 hours
UNE ISDN (Includes UDC)	95% > = 48 hours
UNE Line Sharing	95% > = 48 hours
UNE Other Design	95% > = 48 hours
UNE Other Non-Design	95% > = 48 hours
Local Transport (Unbundled Interoffice Transport)	95% > = 48 hours
Local Interconnection Trunks	95% > = 48 hours
UNE Line Splitting	95% > = 48 hours
EELs	95% > = 48 hours

SEEM Measure

SEEM	Tier I	Tier II
No		

SEEM Disaggregation	SEEM Analog/Benchmark
Not Applicable	Not Applicable

P-2B: Percentage of Orders Given Jeopardy Notices

Definition

When BellSouth can determine in advance that a committed due date is in jeopardy for facility delay, it will provide advance notice to the CLEC.

The Percent of Orders is the percentage of orders given jeopardy notices for facility delay in the count of orders confirmed in the report period.

Exclusions

- Orders held for CLEC end user reasons
- Disconnect (D) and From (F) orders

Business Rules

When BellSouth can determine in advance that a committed due date is in jeopardy for facility delay, it will provide advance notice to the CLEC. The number of committed orders in a report period is the number of orders that have a due date in the reporting period. Jeopardy notices for interconnection trunks results are usually zero as these trunks seldom experience facility delays. The Committed due date is considered the Confirmed due date. This report measures dispatched orders only. If an order is originally sent as non-dispatch and it is determined there is a facility delay, the order is converted to a dispatch code so the facility problem can be corrected. It will remain coded dispatched until completion.

Calculation

Percent of Orders Given Jeopardy Notice = (a / b) X 100

- a = Number of Orders Given Jeopardy Notices in Reporting Period
- b = Number of Orders Confirmed (due) in Reporting Period

Percent of Orders Given Jeopardy Notice > = 48 hours = (c / d) X 100

- c = Number of Orders Given Jeopardy Notice >= 48 hours in Reporting Period (electronic only)
- d = Number of Orders Given Jeopardy Notices in Reporting Period (electronic only)

Report Structure

- CLEC Specific
- CLEC Aggregate
- BellSouth Aggregate
- Mechanized Orders
- Non-Mechanized Orders
- Dispatch/Non-Dispatch
- Geograhic Scope
  - State
  - Region

Data Retained

Relating to CLEC Experience

- Report Month
- CLEC Order Number and PON

- Date and Time Jeopardy Notice sent
- Committed Due Date
- Service Type

Relating to BellSouth Performance

- Report Month
- BellSouth Order Number
- Date and Time Jeopardy Notice sent
- Committed Due Date
- Service Type

SQM Disaggregation - Analog/Benchmark

SQM Level of Disaggregation	SQM Analog/Benchmark
• Resale Residence	Retail Residence
• Resale Business	Retail Business
• Resale Design	Retail Design
• Resale PBX	Retail PBX
• Resale Centrex	Retail Centrex
• Resale ISDN	Retail ISDN
• LNP (Standalone)	Retail Residence and Business (POTS)
• INP (Standalone)	Retail Residence and Business (POTS)
• 2W Analog Loop Design	Retail Residence and Business Dispatch
• 2W Analog Loop Non-Design	Retail Residence and Business – (POTS Excluding Switch-Based Orders)
• 2W Analog Loop with LNP - Design	Retail Residence and Business Dispatch
• 2W Analog Loop with LNP - Non-Design	Retail Residence and Business – (POTS Excluding Switch-Based Orders)
• 2W Analog Loop with INP-Design	Retail Residence and Business Dispatch
• 2W Analog Loop with INP-Non-Design	Retail Residence and Business – (POTS Excluding Switch-Based Orders)
• UNE Digital Loop <DS1	Retail Digital Loop <DS1
• UNE Digital Loop >=DS1	Retail Digital Loop >=DS1
• UNE Loop + Port Combinations	Retail Residence and Business
- Dispatch In	- Dispatch In
- Switch Based	- Switch Based
• UNE Switch Ports	Retail Residence and Business (POTS)
• UNE Combo Other	Retail Residence, Business and Design Dispatch
• UNE xDSL (HDSL, ADSL and UCL)	ADSL Provided to Retail
• UNE ISDN (Includes UDC)	Retail ISDN - BRI
• UNE Line Sharing	ADSL Provided to Retail
• UNE Other Design	Retail Design
• UNE Other Non-Design	Retail Residence and Business
• Local Transport (Unbundled Interoffice Transport)	Retail DS1/DS3 Interoffice
• Local Interconnection Trunks	Parity with Retail
• UNE Line Splitting	ADSL Provided to Retail
• EELs	Retail DS1/DS3

SEEM Measure

SEEM	Tier I	Tier II
No		

SEEM Disaggregation	SEEM Analog/Benchmark
• Not Applicable	Not Applicable

P-3: Percent Missed Initial Installation Appointments

Definition

"Percent missed initial installation appointments" monitors the reliability of BellSouth commitments with respect to committed due dates to assure that the CLEC can reliably quote expected due dates to their retail customer as compared to BellSouth. This measure is the percentage of total orders processed for which BellSouth is unable to complete the service orders on the committed due dates and reported for Total misses and End User Misses.

Exclusions

- Orders canceled prior to the due date including orders that are to be provisioned on the same day they are placed. ("Zero Due Date Orders")
- Order Activities of BellSouth or the CLEC associated with internal or administrative use of local services (Record Orders, Listing Orders Test Orders, etc., Order types may be coded C, N, R or T)
- Disconnect (D) & From (F) orders
- End User Misses

Business Rules

Percent Missed Initial Installation Appointments (PMI) is the percentage of orders with completion dates in the reporting period that are past the original committed due date. Missed Appointments caused by end-user reasons will be excluded and reported separately. The first commitment date on the service order that is a missed appointment is the missed appointment code used for calculation whether it is a BellSouth missed appointment or an End User missed appointment. The "due date" is any time on the confirmed due date. Which means there cannot be a cutoff time for commitments, as certain types of orders are requested to be worked after standard business hours. Also, during Daylight Savings Time, field technicians are scheduled until 9PM in some areas and the customer is offered a greater range of intervals from which to select.

Calculation

Percent Missed Installation Appointments = (a / b) X 100

- a = Number of Orders with Completion date in Reporting Period past the Original Committed Due Date
- b = Number of Orders Completed in Reporting Period

Report Structure

- CLEC Specific
- CLEC Aggregate
- BellSouth Aggregate
- Report in Categories of <10 lines/circuits >= 10 lines/circuits (except trunks)
- Dispatch/Non-Dispatch (except Trunks)
- Geographic Scope
  - State
  - Region

Data Retained

Relating to CLEC Experience

- Report Month
- CLEC Order Number and PON (PON)
- Committed Due Date (DD)

- Completion Date (CMPLTN DD)
- Status Type
- Status Notice Date
- Standard Order Activity

Note: Code in parentheses is the corresponding header found in the raw data file.

Relatng to BellSouth Performance

- Report Month
- BellSouth Order Number
- Committed Due Date (DD)
- Completion Date (CMPLTN DD)
- Status Type
- Status Notice Date
- Standard Order Activity

SQM Disaggregation - Analog/Benchmark

SQM Level of Disaggregation	SQM Analog/Benchmark
• Resale Residence	Retail Residence
• Resale Business	Retail Business
• Resale Design	Retail Design
• Resale PBX	Retail PBX
• Resale Centrex	Retail Centrex
• Resale ISDN	Retail ISDN
• LNP (Standalone)	Retail Residence and Business (POTS)
• INP (Standalone)	Retail Residence and Business (POTS)
• 2W Analog Loop Design	Retail Residence and Business Dispatch
• 2W Analog Loop Non-Design	Retail Residence and Business – (POTS Excluding Switch- Based Orders)
• 2W Analog Loop With LNP - Design	Retail Residence and Business Dispatch
• 2W Analog Loop With LNP- Non-Design	Retail Residence and Business – (POTS Excluding Switch-Based Orders)
• 2W Analog Loop With INP-Design	Retail Residence and Business Dispatch
• 2W Analog Loop With INP-Non-Design	Retail Residence and Business – (POTS Excluding Switch-Based Orders)
• UNE Digital Loop < DS1	Retail Digital Loop < DS1
• UNE Digital Loop >= DS1	Retail Digital Loop >= DS1
• UNE Loop + Port Combinations	Retail Residence and Business
- Dispatch In	- Dispatch In
- Switch Based	- Switched Based
• UNE Switch Ports	Retail Residence and Business (POTS)
• UNE Combo Other	Retail Residence, Business and Design Dispatch
• UNE xDSL (HDSL, ADSL and UCL)	ADSL Provided to Retail
- Without Conditioning	- Without Conditioning
- With Conditioning	- With Conditioning (BellSouth does not offer this service to Retail)
• UNE ISDN	Retail ISDN - BRI
• UNE Line Sharing Without Conditioning	ADSL Provided to Retail
With Conditioning	ADSL Provided to Retail
• UNE Other Design	Retail Design
• UNE Other Non-Design	Retail Residence and Business
• Local Transport (Unbundled Interoffice Transport)	Retail DS1/DS3 Interoffice
• Local Interconnection Trunks	Parity with Retail
• UNE Line Splitting Without Conditioning	ADSL Provided to Retail
• With Conditioning	ADSL Provided to Retail
• EELs	Retail DS1/DS3
• UNE UDC/IDSL	Retail ISDN - BRI

SEEM Measure

SEEM	Tier I	Tier II
Yes	X	X

SEEM Disaggregation - Analog/Benchmark

SEEM Disaggregation	SEEM Analog/Benchmark
• Resale Residence	Retail Residence
• Resale Business	Retail Business
• Resale Design	Retail Design
• Resale PBX	Retail PBX
• Resale Centrex	Retail Centrex
• Resale ISDN	Retail ISDN
• LNP (Standalone)	Retail Residence and Business (POTS)
• INP (Standalone)	Retail Residence and Business (POTS)
• 2W Analog Loop Design	Retail Residence and Business Dispatch
• 2W Analog Loop Non-Design	Retail Residence and Business – (POTS Excluding Switch-Based Orders)
• 2W Analog Loop With LNP - Design	Retail Residence and Business Dispatch
• 2W Analog Loop With LNP- Non-Design	Retail Residence and Business – (POTS Excluding Switch-Based Orders)
• 2W Analog Loop With INP-Design	Retail Residence and Business Dispatch
• 2W Analog Loop With INP-Non-Design	Retail Residence and Business – (POTS Excluding Switch-Based Orders)
• UNE Digital Loop < DS1	Retail Digital Loop < DS1
• UNE Digital Loop >= DS1	Retail Digital Loop >=DS1
• UNE Loop + Port Combinations	Retail Residence and Business
- Dispatch In	- Dispatched In
- Switch Based	- Switch Based
• UNE Switch Ports	Retail Residence and Business (POTS)
• UNE Combo Other	Retail Residence, Business and Design Dispatch
• UNE xDSL (HDSL, ADSL and UCL)	ADSL Provided to Retail
- Without Conditioning	- Without Conditioning
- With Conditioning	- With Conditioning (BellSouth does not offer this service to Retail)
• UNE ISDN	Retail ISDN - BRI
• UNE Line Sharing Without Conditioning	ADSL Provided to Retail
With Conditioning	ADSL Provided to Retail
• Local Transport (Unbundled Interoffice Transport)	Retail DS1/DS3 Interoffice
• Local Interconnection Trunks	Parity with Retail
• UNE Line Splitting Without Conditioning	ADSL Provided to Retail
• With Conditioning	ADSL Provided to Retail
• UNE Other Design	Retail Design
• UNE Other Non-Design	Retail Residence and Business
• EELs	Retail DS1/DS3
• UNE UDC/IDSL	Retail ISDN - BRI

P-3A: Percent Missed Installation Appointments Including Subsequent Appointments

(Deleted)

P-4: Average Completion Interval (OCI) & Order Completion Interval Distribution

Definition

The "average completion interval" measure monitors the interval of time it takes BellSouth to provide service for the CLEC or its own customers. The "Order Completion Interval Distribution" provides the percentages of orders completed within certain time periods. This report measures how well BellSouth meets the interval offered to customers on service orders.

Exclusions

- Canceled Service Orders
- Order Activities of BellSouth or the CLEC associated with internal or administrative use of local services (Record Orders, Listing Orders, Test Orders, etc.)
- Disconnect (D & F) orders (Except "D" orders associated with LNP Standalone)
- "L" Appointment coded orders (where the customer has requested a later than offered interval)
- End user-caused misses

Business Rules

The actual completion interval is determined for each order processed during the reporting period. The completion interval is the elapsed time from when BellSouth issues a FOC or SOCS date time stamp receipt of an order from the CLEC to BellSouth's actual order completion date. The clock starts when a valid order number is assigned by SOCS and stops when the technician or system completes the order in SOCS. Elapsed time for each order is accumulated for each reporting dimension. The accumulated time for each reporting dimension is then divided by the associated total number of orders completed. Orders that are worked on zero due dates are calculated with a .33-day interval (8 hours) in order to report a portion of a day interval. These orders are issued and worked/completed on the same day. They can be either flow through orders (no field work-non-dispatched) or field orders (dispatched).

The interval breakout for UNE and Design is: 0-5 = 0-< 5, 5-10 = 5-<10, 10-15 = 10-< 15, 15-20 = 15- < 20, 20-25 = 20-< 25, 25-30 = 25-< 30, >= 30 = 30 and greater.

Calculation

Completion Interval = (a - b)

- a = Completion Date
- b = FOC/SOCS date time-stamp (application date)

Average Completion Interval = (c / d)

- c = Sum of all Completion Intervals
- d = Count of Orders Completed in Reporting Period

Order Completion Interval Distribution (for each interval) = (e / f) X 100

- e = Service Orders Completed in "X" days
- f = Total Service Orders Completed in Reporting Period

Report Structure

- CLEC Specific
- CLEC Aggregate
- BellSouth Aggregate
- Dispatch/Non-Dispatch categories applicable to all levels except trunks
- Residence and Business reported in day intervals = 0,1,2,3,4,5,5+
- UNE and Design reported in day intervals =0-5,5-10,10-15,15-20,20-25,25-30, >= 30
- All Levels are reported <10 line/circuits; >= 10 line/circuits (except trunks)

- Geographic Scope
  - State
  - Region

Data Retained

Relating to CLEC Experience

- Report Month
- CLEC Company Name
- Order Number (PON)
- Application Date and Time
- Completion Date (CMPLTN_DT)
- Service Type (CLASS_SVC_DESC)
- Geographic Scope

Note: Code in parentheses is the corresponding header found in the raw data file.

Relating to BellSouth Performance

- Report Month
- BellSouth Order Number
- Order Submission Date and Time
- Order Completion Date and Time
- Service Type
- Geographic Scope

SQM Disaggregation - Analog/Benchmark

SQM Level of Disaggregation	SQM Analog/Benchmark
Resale Residence	Retail Residence
Resale Business	Retail Business
Resale Design	Retail Design
Resale PBX	Retail PBX
Resale Centrex	Retail Centrex
Resale ISDN	Retail ISDN
LNP (Standalone)	Retail Residence and Business (POTS)
INP (Standalone)	Retail Residence and Business (POTS)
2W Analog Loop Design	Retail Residence and Business Dispatch
2W Analog Loop Non-Design	Retail Residence and Business – (POTS Excluding Switch-Based Orders)
2W Analog Loop with LNP - Design	Retail Residence and Business Dispatch
2W Analog Loop with LNP- Non-Design	Retail Residence and Business – (POTS Excluding Switch-Based Orders)
2W Analog Loop with INP-Design	Retail Residence and Business Dispatch
2W Analog Loop with INP-Non-Design	Retail Residence and Business – (POTS Excluding Switch-Based Orders)
UNE Digital Loop < DS1	Retail Digital Loop < DS1
UNE Digital Loop >= DS1	Retail Digital Loop >= DS1
UNE Loop + Port Combinations	Retail Residence and Business
- Dispatch In	- Dispatch In
- Switch Based	- Switch Based
UNE Switch Ports	Retail Residence and Business (POTS)
UNE Combo Other	Retail Residence, Business and Design Dispatch
UNE xDSL (HDSL, ADSL and UCL)	
- Without Conditioning	- <= 5 Days
- With Conditioning	- <= 12 Days
UNE ISDN	Retail ISDN - BRI
UNE Line Sharing Without Conditioning	ADSL Provided to Retail

With Conditioning ..... <= 12 Days
- Local Transport (Unbundled Interoffice Transport) ..... Retail DS1/DS3 Interoffice
- Local Interconnection Trunks ..... Parity with Retail
- UNE Line Splitting Without Conditioning ..... ADSL Provided to Retail
- With Conditioning ..... <= 12 Days
- UNE Other Design ..... Retail Design
- UNE Other Non-Design ..... Retail Residence and Business
- EELs ..... Retail DS1/DS3
- UNE UDC/IDSL ..... Retail ISDN - BRI

SEEM Measure

SEEM	Tier I	Tier II
Yes	X	X

SEEM Disaggregation - Analog/Benchmark

SEEM Disaggregation	SEEM Analog/Benchmark
Resale Residence	Retail Residence
Resale Business	Retail Business
Resale Design	Retail Design
Resale PBX	Retail PBX
Resale Centrex	Retail Centrex
Resale ISDN	Retail ISDN
LNP (Standalone)	Retail Residence and Business (POTS)
INP (Standalone)	Retail Residence and Business (POTS)
2W Analog Loop Design	Retail Residence and Business Dispatch
2W Analog Loop Non-Design	Retail Residence and Business – (POTS Excluding Switch-Based Orders)
2W Analog Loop with LNP - Design	Retail Residence and Business Dispatch
2W Analog Loop with LNP- Non-Design	Retail Residence and Business – (POTS Excluding Switch-Based Orders)
2W Analog Loop with INP-Design	Retail Residence and Business Dispatch
2W Analog Loop with INP-Non-Design	Retail Residence and Business – (POTS Excluding Switch-Based Orders)
UNE Digital Loop < DS1	Retail Digital Loop < DS1
UNE Digital Loop >= DS1	Retail Digital Loop >=DS1
UNE Loop + Port Combinations	Retail Residence and Business
- Dispatch In	- Dispatch In
- Switch Based	- Switch Based
UNE Switch Ports	Retail Residence and Business (POTS)
UNE Combo Other	Retail Residence, Business and Design Dispatch
UNE xDSL (HDSL, ADSL and UCL)	
- Without Conditioning	- <= 5 Days
- With Conditioning	- <= 12 Days
UNE ISDN	Retail ISDN - BRI
UNE Line Sharing Without Conditioning	ADSL Provided to Retail
With Conditioning	<= 12 Days
Local Transport (Unbundled Interoffice Transport)	Retail DS1/DS3 Interoffice
Local Interconnection Trunks	Parity with Retail
UNE Line Splitting Without Conditioning	ADSL Provided to Retail
With Conditioning	<= 12 Days
UNE Other Design	Retail Design
UNE Other Non-Design	Retail Residence and Business
EELs	Retail DS1/DS3
UNE UDC/IDSL	Retail ISDN/BRI

P-4A: Average Order Completion and Completion Notice Interval (AOCCNI) Distribution

(Deleted)

P-5: Average Completion Notice Interval

Definitions

The Completion Notice Interval is the elapsed time between the BellSouth reported completion of work and the issuance of a valid completion notice to the CLEC.

Exclusions

- Canceled Service Orders
- Order Activities of BellSouth or the CLEC associated with internal or administrative use of local services (Record Orders, Listing Orders, Test Orders, etc.) Test order types may be C, N, R, or T.
- D & F orders (Exception: "D" orders associated with LNP Standalone)

Business Rules

Measurement on interval of completion date and time entered by a field technician on dispatched orders, and 5PM start time on the due date for non-dispatched orders; to the release of a notice to the CLEC/BellSouth of the completion status. The field technician notifies the CLEC the work was complete and then he/she enters the completion time stamp information in his/her computer. This information switches through to the SOCS systems either completing the order or rejecting the order to the Work Management Center (WMC). If the completion is rejected, it is manually corrected and then completed by the WMC. The notice is returned on each individual order.

The start time for all orders is the completion stamp either by the field technician or the 5PM due date stamp; the end time for mechanized orders is the time stamp the notice was delivered to the CLEC interface (LENS, EDI, OR TAG). For non-mechanized orders-the end time will be date and timestamp of order update from the FAX record via LON or C-SOTS system. For the retail analog, the start time is when the technician completes the order and the end time is when the order status is changed to complete in SOCS.

Calculation

Completion Notice Interval = (a - b)

- a = Date and Time of Notice of Completion
- b = Date and Time of Work Completion

Average Completion Notice Interval = c / d

- c = Sum of all Completion Notice Intervals
- d = Number of Orders with Notice of Completion in Reporting Period

Report Structure

- CLEC Specific
- CLEC Aggregate
- BellSouth Aggregate
- Mechanized Orders
- Non-Mechanized Orders
- Dispatch/Non-Dispatch
- Reporting intervals in Hours; 0,1- <= 2, > 2 - <= 4, > 4 - <= 8, > 8 - <= 12, > 12- <= 24, > 24 plus Overall Average Hour Interval
- Reported in categories of <10 line / circuits; >= 10 line/circuits (except trunks)
- Geographic Scope
  - State
  - Region

Data Retained

Relating to CLEC Experience

- Report Month
- CLEC Order Number (so_nbr)
- Work Completion Date (cmpltn_dt)
- Work Completion Time
- Completion Notice Availability Date
- Completion Notice Availability Time
- Service Type
- Geographic Scope

Note: Code in parentheses is the corresponding header found in the raw data file.

Relating to BellSouth Performance

- Report Month
- BellSouth Order Number (so_nbr)
- Work Completion Date (cmpltn_dt)
- Work Completion Time
- Completion Notice Availability Date
- Completion Notice Availability Time
- Service Type
- Geographic Scope

Note: Code in parentheses is the corresponding header found in the raw data file.

SQM Disaggregation - Analog/Benchmark

SQM Level of Disaggregation	SQM Analog/Benchmark
Resale Residence	Retail Residence
Resale Business	Retail Business
Resale Design	Retail Design
Resale PBX	Retail PBX
Resale Centrex	Retail Centrex
Resale ISDN	Retail ISDN
LNP (Standalone)	Retail Residence and Business (POTS)
INP (Standalone)	Retail Residence and Business (POTS)
2W Analog Loop Design	Retail Residence and Business Dispatch
2W Analog Loop Non-Design	Retail Residence and Business – (POTS Excluding Switch-Based Orders)
2W Analog Loop with LNP - Design	Retail Residence and Business Dispatch
2W Analog Loop with LNP- Non-Design	Retail Residence and Business - POTS Excluding Switch-Based Orders
2W Analog Loop with INP-Design	Retail Residence and Business Dispatch
2W Analog Loop with INP-Non-Design	Retail Residence and Business - POTS Excluding Switch-Based Orders
UNE Digital Loop < DS1	Retail Digital Loop < DS1
UNE Digital Loop >= DS1	Retail Digital Loop >= DS1
UNE Loop + Port Combinations	Retail Residence and Business
- Dispatch In	- Dispatch In
- Switch Based	- Switch Based
UNE Switch Ports	Retail Residence and Business (POTS)
UNE Combo Other	Retail Residence, Business and Design Dispatch
UNE xDSL (HDSL, ADSL and UCL)	ADSL Provided to Retail

- UNE ISDN (Includes UDC) ..... Retail ISDN - BRI
- UNE Line Sharing ..... ADSL Provided to Retail
- Local Transport (Unbundled Interoffice Transport) ..... Retail DS1/DS3 Interoffice
- Local Interconnection Trunks ..... Parity with Retail
- UNE Line Splitting ..... ADSL to Retail
- UNE Other Design ..... Retail Design
- UNE Other Non-Design ..... Retail Residence and Business
- EELs ..... Retail DS1/DS3

SEEM Measure

SEEM	Tier I	Tier II
No		

SEEM Disaggregation - Analog/Benchmark

SEEM Disaggregation	SEEM Analog/Benchmark
• Not Applicable	Not Applicable

P-6: % Completions/Attempts without Notice or < 24 hours Notice

Definition

The purpose of this measure is to report if BellSouth is returning a FOC to the CLEC in time for the CLEC to notify their customer of the scheduled date.

Exclusions

- Canceled Orders
- Expedited Orders
- "0" dated orders or any request where the subscriber requested an earlier due date of < 24 hours prior to the original commitment date, or any LSR received < 24 hours prior to the original commitment date.

Business Rules

For CLEC Results:

Calculation would exclude any successful or unsuccessful service delivery where the CLEC was informed at least 24 hours in advance. BellSouth may also exclude from calculation any LSRs received from the requesting CLEC with less than 24 hour notice prior to the commitment date.

Calculation

Percent Completions or Attempts without Notice or with Less Than 24 Hours Notice = (a / b) X 100

- a = Completion Dispatches (Successful and Unsuccessful) With No FOC or FOC Received < 24 Hours of Original Committed Due Date
- b = All Completions

Report Structure

- CLEC Specific
- CLEC Aggregate
- Dispatch /Non-Dispatch
- Total Orders FOC < 24 Hours
- Total Completed Service Orders
- % FOC < 24 Hours
- Geographic Scope
  - State
  - Region

Data Retained

Relating to CLEC Experience

- Committed Due Date (DD)
- FOC End Timestamp
- Report Month
- CLEC Order Number and PON

Relating to BellSouth Performance

- Not Applicable

SQM Disaggregation - Analog/Benchmark

SQM Level of Disaggregation	SQM Analog/Benchmark
• Resale Residence	<= 5%
• Resale Business	
• Resale Design	
• Resale PBX	
• Resale Centrex	
• Resale ISDN	
• LNP (Standalone)	
• INP (Standalone)	
• 2W Analog Loop Design	
• 2W Analog Loop Non-Design	
• 2W Analog Loop Design with LNP	
• 2W Analog Loop Non-Design with LNP	
• 2W Analog Loop Design with INP	
• 2W Analog Loop Non-Design with INP	
• UNE Digital Loop < DS1	
• UNE Digital Loop >= DS1	
• UNE Loop + Port Combinations	
- Dispatch In	
- Switch Based	
• UNE Switch Ports	
• UNE Combo Other	
• UNE xDSL (HDSL, ADSL and UCL)	
• UNE ISDN (Includes UDC)	
• UNE Line Sharing	
• UNE Line Splitting	
• Local Transport (Unbundled Interoffice Transport)	
• Local Interconnection Trunks	
• EELS	

SEEM Measure

SEEM	Tier I	Tier II
No		

SEEM Disaggregation - Analog/Benchmark

SEEM Disaggregation	SEEM Analog/Benchmark
• Not Applicable	Not Applicable

P-6: % Completions/Attempts without Notice or < 24 hours Notice

P-7: Coordinated Customer Conversions Interval

Definition

This report measures the average time it takes BellSouth to disconnect an unbundled loop from the BellSouth switch and cross connect it to CLEC equipment. This measurement applies to service orders with INP and LNP, and where the CLEC has requested BellSouth to provide a coordinated cutover.

Exclusions

- Any order canceled by the CLEC will be excluded from this measurement.
- Delays due to CLEC following disconnection of the unbundled loop
- Unbundled Loops where there is no existing subscriber loop and loops where coordination is not requested.

Business Rules

Where the service order includes LNP, the interval includes the total time for the cutover including the translation time to place the line back in service on the ported line. When the service order includes INP, the interval includes the total time for the cutover including the translation time to place the link back in service on the ported line. The interval is calculated for the entire cutover time for the service order and then divided by items worked in that time to give the average per-item interval for each service order.

Calculation

Coordinated Customer Conversions Interval = (a - b)

- a = Completion Date and Time for Cross Connection of a Coordinated Unbundled Loop
- b = Disconnection Date and Time of an Coordinated Unbundled Loop

Percent Coordinated Customer Conversions (for each interval) = (c / d) X 100

- c = Total number of Coordinated Customer Conversions for each interval
- d = Total Number of Unbundled Loop with Coordinated Conversions (items) for the reporting period

Report Structure

- CLEC Specific
- CLEC Aggregate
- The interval breakout is 0-5 = 0-<=5, 5-15 = >5-<=15, >=15 = 15 and greater, plus Overall Average Interval
- Geographic Scope
  - State
  - Region

Data Retained

Relating to CLEC Experience

- Report Month
- CLEC Order Number
- Committed Due Date (DD)
- Service Type (CLASS_SVC_DESC)
- Cutover Start Time
- Cutover Completion time
- Portability Start and Completion Times (INP orders)
- Total Conversions (Items)

Note: Code in parentheses is the corresponding header found in the raw data file.

Relating to BellSouth Performance

- No BellSouth Analog Exists

SQM Disaggregation - Analog/Benchmark

SQM Level of Disaggregation	SQM Analog/Benchmark
• Unbundled Loops with INP	95% <= 15 minutes
• Unbundled Loops with LNP	95% <= 15 minutes

SEEM Measure

SEEM	Tier I	Tier II
Yes	X	X

SEEM Disaggregation - Analog/Benchmark

SEEM Disaggregation	SEEM Analog/Benchmark
• Unbundled Loops With INP	95% <= 15 minutes
• Unbundled Loops With LNP	95% <= 15 minutes

P-7A: Coordinated Customer Conversions – Hot Cut Timeliness % within Interval and Average Interval

Definition

This category measures whether BellSouth begins the cutover of an unbundled loop on a coordinated and/or a time specific order at the CLEC requested start time. It measures the percentage of orders where the cut begins within 15 minutes of the requested start time of the order and the average interval.

Exclusions

- Any order canceled by the CLEC will be excluded from this measurement.
- Delays caused by the CLEC
- Unbundled Loops where there is no existing subscriber loop and loops where coordination is not requested.
- All unbundled loops on multiple loop orders after the first loop
- Test Orders

Business Rules

This report measures whether BellSouth begins the cutover of an unbundled loop on a coordinated and/or a time specific order at the CLEC requested start time. The cut is considered on time if it starts 15 minutes before or after the requested start time. Using the scheduled time and the actual cutover start time, the measurement will calculate the percent within interval and the average interval. If a cut involves multiple lines, the cut will be considered "on time" if the first line is cut within the interval. <= 15 minutes includes intervals that began 15:00 minutes or less before the scheduled cut time and cuts that began 15 minutes or less after the scheduled cut time; >15 minutes, <= 30 minutes includes cuts within 15:00 – 30:00 minutes either prior to or after the scheduled cut time; >30 minutes includes cuts greater than 30:00 minutes either prior to or after the scheduled cut time. If IDLC is involved, a four hour window applies to the start time. (8 A.M. to Noon or 1 P.M. to 5 P.M.) This only applies if BellSouth notifies the CLEC by 10:30 A.M. on the day before the due date that the service is on IDLC.

Calculation

% within Interval = (a / b) X 100

- a = Total Number of Coordinated Unbundled Loop Orders for the interval
- b = Total Number of Coordinated Unbundled Loop Orders for the reporting period

Interval = (c - d)

- c = Scheduled Time for Cross Connection of a Coordinated Unbundled Loop Order
- d = Actual Start Date and Time of a Coordinated Unbundled Loop Order

Average Interval = (e / f)

- Sum of all Intervals
- Total Number of Coordinated Unbundled Loop Orders for the reporting period.

Report Structure

- CLEC Specific
- CLEC Aggregate
  Reported in intervals of early, on time and late cuts % <= 15 minutes; % >15 minutes, <= 30 minutes; % >30 minutes, plus Overall Average Interval
- Geographic Scope
  - State
  - Region
- Percentages are reported in intervals of early, on time and late cuts for IDLC and non-IDLC cuts

  On Time (Non-IDLC)
  <= 15 minutes
  Note: This is a 30-minute bucket representing a cut that begins 15 minutes or less before or after the scheduled start time.

  Early (Non-IDLC)
  >15 minutes - <= 30 minutes
  >30 minutes - <= 60 minutes
  >60 minutes - <= 120 minutes
  >120 minutes - <= 180 minutes
  >180 minutes - <= 240 minutes
  <= 240 minutes

  Late (Non-IDLC)
  >15 minutes - <= 30 minutes
  >30 minutes - <= 60 minutes
  >60 minutes - <= 120 minutes
  >120 minutes - <= 180 minutes
  >180 minutes - <= 240 minutes
  >240 minutes
  Overall Average Interval for non-IDLC

  On Time (IDLC)
  <= 2 hours
  Note: This is a 4-hour bucket representing a cut involving IDLC that begins 2 hours or less before or after the scheduled start time

  Early (IDLC)
  >2 hours

  Late (IDLC)
  >2 hours
  Overall Average Interval for IDLC

Data Retained

Relating to CLEC Experience

- Report Month
- CLEC Order Number (so_nbr)
- Committed Due Date (DD)
- Service Type (CLASS_SVC_DESC)
- Cutover Scheduled Start Time
- Cutover Actual Start Time
- Total Conversions Orders

Note: Code in parentheses is the corresponding header found in the raw data file.

Relating to BellSouth Performance

- No BellSouth Analog exists

SQM Disaggregation - Analog/Benchmark

SQM Level of Disaggregation	SQM Analog/Benchmark
• Product Reporting Level	95% within + or – 15 Minutes of Scheduled Start Time
- SL1 Time Specific	
- SL1 Non-Time Specific	
- SL2 Time Specific	
- SL2 Non-Time Specific	
- SL1 IDLC	95% within 4-Hour Window
- SL2 IDLC	

SEEM Measure

SEEM	Tier I	Tier II
Yes	X	X

SEEM Disaggregation - Analog/Benchmark

SEEM Disaggregation	SEEM Analog/Benchmark
- SL1 Time Specific	95% within + or – 15 Minutes of Scheduled Start Time
- SL1 IDLC	
- SL1 Non-Time Specific	
- SL2 Time Specific	
- SL2 Non-Time Specific	95% within 4-Hour Window
- SL2 IDLC	

P-7B: Coordinated Customer Conversions – Average Recovery Time

Definition

Measures the time between notification and resolution by BellSouth of a service outage found that can be isolated to the BellSouth side of the network. The time between notification and resolution by BellSouth must be measured to ensure that CLEC customers do not experience unjustifiable lengthy service outages during a Coordinated Customer Conversion. This report measures outages associated with Coordinated Customer Conversions prior to service order completion.

Exclusions

- Cutovers where service outages are due to CLEC caused reasons when the CLEC agrees
- Cutovers where service outages are due to end-user caused reasons when the CLEC agrees
- Test Orders

Business Rules

Measures the outage duration time related to Coordinated Customer Conversions from the initial trouble notification until the trouble has been restored and the CLEC has been notified. The duration time is defined as the time from the initial trouble notification until the trouble has been restored and the CLEC has been notified. The interval is calculated on the total outage time for the circuits divided by the total number of outages restored during the report period to give the average outage duration.

Calculation

Recovery Time = (a - b)

- a = Date and Time That Trouble is Closed by CLEC
- b = Date and Time Initial Trouble is Opened with BellSouth

Average Recovery Time = (c / d)

- c = Sum of all the Recovery Times per circuit
- d = Number of Troubles per circuit Referred to BellSouth

Report Structure

- CLEC Specific
- CLEC Aggregate
- Geographic Scope
  - State
  - Region

Data Retained

Relating to CLEC Experience

- Report Month
- CLEC Company Name
- CLEC Order Number (so_nbr)
- Committed Due Date (DD)
- Service Type (CLASS_SVC_DESC)
- CLEC Acceptance Conflict (CLEC_CONFLICT)
- CLEC Conflict Resolved (CLEC_CON_RES)
- CLEC Conflict MFC (CLEC_CONFLICT_MFC)

- Total Conversion Orders

Note: Code in parentheses is the corresponding header found in the raw data file.

Relating to BellSouth Performance

- None

SQM Disaggregation - Analog/Benchmark

SQM Level of Disaggregation	SQM Analog/Benchmark
• Unbundled Loops with INP	<= 5 Hours
• Unbundled Loops with LNP	<= 5 Hours

SEEM Measure

SEEM	Tier I	Tier II
No		

SEEM Disaggregation - Analog/Benchmark

SEEM Disaggregation	SEEM Analog/Benchmark
• Not Applicable	Not Applicable

P-7C: Hot Cut Conversions - % Provisioning Troubles Received within 7 Days of a Completed Service Order

Definition

The Percent Provisioning Troubles received within 7 days of a completed service order associated with a Hot Cut Conversion (CCC) measures the quality and accuracy of Coordinated Customer Conversion Activities.

Exclusions

- Any order cancelled by the CLEC
- Troubles caused by Customer Provided Equipment
- Test Orders

Business Rules

Measures the quality and accuracy of completed service orders associated with Coordinated and Non-coordinated Customer Conversions. The first trouble report received on a circuit ID within 7 days following a service order completion is counted in this measure. Subsequent trouble reports are measured in Repeat Report Rate. Reports are calculated searching in the prior report period for completed Coordinated Customer Conversion service orders and following 7 days after the completion of the service order for a trouble report issue date.

Calculation

% Provisioning Troubles within 7 days of service order completion = (a / b) X 100

- a = The sum of all CCC Circuits with a trouble within 7 days following service order(s) completion
- b = The total number of CCC service order circuits completed in the previous report calendar month

Report Structure

- CLEC Specific
- CLEC Aggregate
- Dispatch/Non-Dispatch
- Geographic Scope
  - State
  - Region

Data Retained

Relating to CLEC Experience

- Report Month
- CLEC Order Number (so_nbr)
- PON
- Order Submission Date (TICKET_ID)
- Order Submission Time (TICKET_ID)
- Status Type
- Status Notice Date
- Standard Order Activity
- Geographic Scope
- Total Conversion Circuits

Note: Code in parentheses is the corresponding header found in the raw data file.

Relating to BellSouth Performance

- No BellSouth Analog exists

SQM Disaggregation - Analog/Benchmark

SQM Level of Disaggregation	SQM Analog/Benchmark
• UNE Loop Design	<= 3%
• UNE Loop Non-Design	<= 3%

SEEM Measure

SEEM	Tier I	Tier II
Yes	X	X

SEEM Disaggregation - Analog/Benchmark

SEEM Disaggregation	SEEM Analog/Benchmark
• UNE Loop Design	<= 3%
• UNE Loop Non-Design	<= 3%

P-8: Cooperative Acceptance Testing - % of xDSL Loops Successfully Passing Cooperative Testing

Definition

A loop will be considered successfully cooperatively tested when both the CLEC and BellSouth representatives agree that the loop meets the technical specifications set forth in TR 73600.

Exclusions

- Testing failures due to CLEC (incorrect contact number, CLEC not ready, etc.)
- xDSL lines with no request for cooperative testing
- Test Orders

Business Rules

When a BellSouth technician finishes delivering an order for an xDSL loop where the CLEC order calls for cooperative testing at the customer's premise, the BellSouth technician is to call a toll free number to the CLEC testing center. The BellSouth technician and the CLEC representative at the center then test the line. As an example of the type of testing performed, the testing center may ask the technician to put a short on the line so that the center can run a test to see if it can identify the short. CLEC caused failures will be captured in the raw data files.

Calculation

Cooperative Acceptance Testing - % of xDSL Loops Successfully Tested = (a / b) X 100

- a = Total number of successful xDSL cooperative tests for xDSL lines where cooperative testing was requested in the reporting period
- b = Total Number of xDSL line tests requested by the CLEC and scheduled in the reporting period

Report Structure

- CLEC Specific
- CLEC Aggregate
- Type of Loop Tested
- Geographic Scope
  - State
  - Region

Data Retained

Relating to CLEC Experience

- Report Month
- CLEC Company Name (OCN)
- CLEC Order Number (so_nbr) and PON (PON)
- Committed Due Date (DD)
- Service Type (CLASS_SVC_DESC)
- Acceptance Testing Completed (ACCEPT_TESTING)
- Acceptance Testing Declined (ACCEPT_TESTING)
- Total xDSL Orders
- Missed Appointments Code (SO_MISSED_CMMT_CD)

Note: Code in parentheses is the corresponding header found in the raw data file.

Relating to BellSouth Performance

- No BellSouth Analog Exists

SQM Disaggregation - Analog/Benchmark

SQM Level of Disaggregation	SQM Analog/Benchmark
• UNE xDSL	95% of Lines Successfully Tested
- ADSL	
- HDSL	
- UCL	
- OTHER	

SEEM Measure

SEEM	Tier I	Tier II
Yes	X	X

SEEM Disaggregation - Analog/Benchmark

SEEM Disaggregation	SEEM Analog/Benchmark
• UNE xDSL	95% of Lines Successfully Tested
- ADSL	
- HDSL	
- UCL	
- Other	

P-9: % Provisioning Troubles within 30 Days of Service Order Completion

Definition

Percent Provisioning Troubles within 30 days of Service Order Completion measures the quality and accuracy of Service order activities.

Exclusions

- Cancelled Service Orders
- Order Activities of BellSouth or the CLEC associated with internal or administrative use of local services (Record Orders, Listing Orders, Test Orders, etc.) Test order types may be C, N, R, or T.
- D & F orders
- Trouble reports caused and closed out to Customer Provided Equipment (CPE)

Business Rules

Measures the quality and accuracy of completed orders. The first trouble report received after service order completion is counted in this measure. Subsequent trouble reports are measured in Repeat Report Rate. Reports are calculated searching in the prior report period for completed service orders and following 30 days after completion of the service order for a trouble report issue date.

D & F orders are excluded as there is no subsequent activity following a disconnect.

Note: Standalone LNP historical data is not available in the maintenance systems (LMOS or WFA).

Calculation

% Provisioning Troubles within 30 days of Service Order Activity = (a / b) X 100

- a = Trouble reports on all completed orders within 30 days following service order(s) completion
- b = All Service Orders completed in the previous report calendar month

Report Structure

- CLEC Specific
- CLEC Aggregate
- BellSouth Aggregate
- Reported in categories of <10 line/circuits; >= 10 line/circuits (except trunks)
- Dispatch /Non-Dispatch (except trunks)
- Geographic Scope
  - State
  - Region

Data Retained

Relating to CLEC Experience

- Report Month
- CLEC Order Number and PON
- Order Submission Date (TICKET_ID)
- Order Submission Time (TICKET_ID)
- Status Type
- Status Notice Date

- Standard Order Activity
- Geographic Scope

Note: Code in parentheses is the corresponding header found in the raw data file.

Relating to BellSouth Performance

- Report Month
- BellSouth Order Number
- Order Submission Date
- Order Submission Time
- Status Type
- Status Notice Date
- Standard Order Activity
- Geographic Scope

SQM Disaggregation - Analog/Benchmark

SQM Level of Disaggregation	SQM Analog/Benchmark
Resale Residence	Retail Residence
Resale Business	Retail Business
Resale Design	Retail Design
Resale PBX	Retail PBX
Resale Centrex	Retail Centrex
Resale ISDN	Retail ISDN
LNP (Standalone)	Retail Residence and Business (POTS)
INP (Standalone)	Retail Residence and Business (POTS)
2W Analog Loop Design	Retail Residence and Business Dispatch
2W Analog Loop Non-Design	Retail Residence and Business - (POTS Excluding Switch-Based Orders)
2W Analog Loop with LNP Design	Retail Residence and Business Dispatch
2W Analog Loop with LNP Non-Design	Retail Residence and Business - (POTS Excluding Switch-Based Orders)
2W Analog Loop with INP Design	Retail Residence and Business Dispatch
2W Analog Loop with INP Non-Design	Retail Residence and Business (POTS - Excluding Switch-Based Orders)
UNE Digital Loop < DS1	Retail Digital Loop < DS1
UNE Digital Loop >= DS1	Retail Digital Loop >= DS1
UNE xDSL (HDSL, ADSL and UCL)	ADSL provided to Retail
UNE ISDN (Includes UDC)	Retail ISDN BRI
UNE Line Sharing	ADSL Provided to Retail
UNE Loop + Port Combinations	Retail Residence and Business
- Dispatch In	- Dispatch In
- Switch-Based	- Switch Based
UNE Switch Ports	Retail Residence and Business (POTS)
UNE Combo Other	Retail Residence, Business and Design Dispatch (Including Dispatch Out and Dispatch In)
Local Transport (Unbundled Interoffice Transport)	Retail DS1/DS3 Interoffice
UNE Other Non-Design	Retail Residence and Business
UNE Other Design	Retail Design
Local Interconnection Trunks	Parity with Retail
UNE Line Splitting	ADSL to Retail
EELs	Retail DS1/DS3

SEEM Measure

SEEM	Tier I	Tier II
Yes	X	X

SEEM Disaggregation - Analog/Benchmark

SEEM Disaggregation	SEEM Analog/Benchmark
• Resale Residence	Retail Residence
• Resale Business	Retail Business
• Resale Design	Retail Design
• Resale PBX	Retail PBX
• Resale Centrex	Retail Centrex
• Resale ISDN	Retail ISDN
• LNP (Standalone)	Retail Residence and Business (POTS)
• INP (Standalone)	Retail Residence and Business (POTS)
• 2W Analog Loop Design	Retail Residence and Business Dispatch
• 2W Analog Loop Non-Design	Retail Residence and Business - (POTS Excluding Switch-Based Orders)
• 2W Analog Loop with LNP Design	Retail Residence and Business Dispatch
• 2W Analog Loop with LNP Non-Design	Retail Residence and Business - (POTS Excluding Switch-Based Orders)
• 2W Analog Loop with INP Design	Retail Residence and Business Dispatch
• 2W Analog Loop with INP Non-Design	Retail Residence and Business (POTS - Excluding Switch-Based Orders)
• UNE Digital Loop < DS1	Retail Digital Loop < DS1
• UNE Digital Loop >= DS1	Retail Digital Loop >= DS1
• UNE Loop + Port Combinations	Retail Residence and Business
- Dispatch In	- Dispatch In
- Switch-Based	- Switch-Based
• UNE Switch Ports	Retail Residence and Business (POTS)
• UNE Combo Other	Retail Residence, Business and Design Dispatch (Including Dispatch Out and Dispatch In)
• UNE xDSL (HDSL, ADSL and UCL)	ADSL provided to Retail
• UNE ISDN (Includes UDC)	Retail ISDN BRI
• UNE Line Sharing	ADSL Provided to Retail
• Local Transport (Unbundled Interoffice Transport)	Retail DS1/DS3 Interoffice
• Local Interconnection Trunks	Parity with Retail
• UNE Line Splitting	ADSL Provided to Retail
• UNE Other Non-Design	Retail Residence and Business
• UNE Other Design	Retail Design
• EELs	Retail DS1/DS3

P-10: Total Service Order Cycle Time (TSOCT)
(Deleted)

P-11: Service Order Accuracy

Definition

The "service order accuracy" measurement measures the accuracy and completeness of BellSouth service orders by comparing what was ordered and what was completed.

Exclusions

- Canceled Service Orders
- Order Activities of BellSouth or the CLEC associated with internal or administrative use of local services (Record Orders, Listing Orders, Test Orders, etc.)
- D & F orders

Business Rules

A statistically valid sample of service orders, completed during a monthly reporting period, is compared to the original account profile and the order that the CLEC sent to BellSouth. An order is "completed without error" if all service attributes and account detail changes (as determined by comparing the original order) completely and accurately reflect the activity specified on the original order and any supplemental CLEC order. For both small and large sample sizes, when a Service Request cannot be matched with a corresponding Service Order, it will not be counted. For small sample sizes an effort will be made to replace the service request.

Service Order Accuracy Sampling Process: A list of all orders completed in the report month is generated. The orders are then listed by the disaggregations specified in the SQM. For each disaggregation, the quantity of completed orders and the error rate for each disaggregation from the previous month are entered into a "Stratified Random Sampling for Proportions" formula. This formula determines the number of orders that are to be reviewed for each disaggregation. Once the sample size for each disaggregation is determined, the specified quantity of orders for each disaggregation are pulled for review.

Calculation

Percent Service Order Accuracy = (a / b) X 100

- a = Orders Completed without Error
- b = Orders Completed in Reporting Period

Report Structure

- CLEC Aggregate
- Reported in categories of <10 line/circuits; >= 10 line/circuits
- Dispatch/Non-Dispatch

Data Retained

Relating to CLEC Experience

- Report Month
- CLEC Order Number and PON
- Local Service Request (LSR)
- Order Submission Date
- Committed Due Date
- Service Type
- Standard Order Activity

Relating to BellSouth Performance

- No BellSouth Analog Exist

SQM Disaggregation - Analog/Benchmark

SQM Level of Disaggregation	SQM Analog/Benchmark
• Resale Residence	95% Accurate
• Resale Business	
• Resale Design (Specials)	
• UNE Specials (Design)	
• UNE (Non-Design)	
• Local Interconnection Trunks	

SEEM Measure

SEEM	Tier I	Tier II
Yes		X

SEEM Disaggregation - Analog/Benchmark

SEEM Disaggregation	SEEM Analog/Benchmark
• Resale	95%
• UNE	95%
• UNE-P	95%

Note: This measure to be replaced when P-11A is implemented.

***Note*: This measure becomes effective with September 2003 service orders. The Service Order Accuracy measure as defined in the previous SQM will be effective prior to that time.**

P-11A: Service Order Accuracy

Definition

The Service Order Accuracy measurement measures the accuracy and completeness of CLEC requests for service by comparing the CLEC Local Service Request (LSR) to the completed service order after provisioning has been completed. Only electronically submitted LSRs that require manual handling by a BellSouth service representative in the LCSC are measured.

Exclusions

- Canceled Service Orders
- Order Activities of BellSouth or the CLEC associated with internal or administrative use of local services (Record Orders, Listing Orders, orders using test OCNs, which may be coded C, N, R or T etc.)
- Disconnect Orders
- CLEC LSRs submitted manually (FAX or Courier)
- CLEC LSRs submitted electronically that are not manually handled by BellSouth (Flow Through)

Business Rules

Only CLEC LSRs submitted electronically that fall out of the electronic system for manual processing (partially mechanized) by a BellSouth representative and the resulting service orders are selected for this measure. The CLEC requested services on the LSR are compared to the completed service order using the CLEC-Affecting Service Attributes shown below.

Selected CLEC-Affecting Service Attributes

The BellSouth Local Service Request (LSR) fields identified below will be used, as applicable, for this Service Order Accuracy review process.

BellSouth LSR Fields

The fields listed below would only be captured as a miss when they are service affecting. For the purpose of the Service Order Accuracy measure, if any of the fields listed below are populated on the LSR and do not match the corresponding field on the Service Order, but this mismatch does not affect the correct provisioning of the Service Order, the field is not considered to be service affecting and therefore will not be included as a miss in this measure. An example would be LCSC/System workarounds, which will be identified in a document posted on the Interconnection website. CLECs may discuss any of the posted LCSC/System Workarounds during the regular PMAP notification calls.

- Company Code
- PON
- Billed Telephone Number
- Telephone Number
- Ported Telephone Number
- Circuit ID
- PIC
- LPIC
- Directory Listing
  - Directory Delivery Address
  - Listing Activity
  - Alphanumeric Listing Identifier Code
  - Record Type

  - Listing Type
  - Listed Telephone Number
  - Listed Name, Last Name
  - Listed Name, First Name
  - Address Indicator
  - Listed Address House Number
  - Listed Address House Number Suffix
  - Listed Address Street Directional
  - Listed Address Street Name
  - Listed Address Thoroughfare
  - Listed Address Street Suffix
  - Listed Address Locality
  - Yellow Pages Heading
- Features
  - Feature Activity
  - Feature Codes
  - Feature Detail*
- Hunting
  - Hunt Group Activity
  - Hunt Group Identifier
  - Telephone Number Identifier
  - Hunt Type Code
  - Hunt Line Activity
  - Hunting Sequence
  - Number Type
  - Hunting Telephone Number
- E911 Listing
  - Service Address House Number
  - Service Address House Number Suffix
  - Service Address Street Directional
  - Service Address Street Name
  - Service Address Thoroughfare
  - Service Address Street Suffix
  - Service Address Descriptive Location
- EATN
- ATN
- APOT
- CFA
- NC
- NCI

* Feature Detail will only be checked for the following USOCs: GCE, GCJ, CREX4, GCJRC, GCZ, DRS, VMSAX, S98VM, S98AF, SMBBX, MBBRX. USOCs and FIDs for Feature Detail will be posted on the Interconnection Website. Any changes to the USOCs and FIDs required to continue checking the identical service will be updated on this Website.

Calculation

Percent Service Order Accuracy = (a / b) X 100

- a = Applicable Orders Completed without Error
- b = Applicable Orders Completed in Reporting Period

Report Structure

- CLEC Specific
- CLEC Aggregate
- Geographic Scope
  - Region

Data Retained

Relating to CLEC Experience

- Report Month
- CLEC Order Number (PON)
- Local Service Request (LSR) Number
- BellSouth Service Order Number
- BellSouth Service Order Completion Date
- Service Type (Resale, UNE, UNE-P)
- Standard Order Activity

Relating to BellSouth Performance

- No BellSouth Analog Exists

SQM Disaggregation – Analog/Benchmark

SQM Level of Disaggregation	SQM Analog/Benchmark
Resale	95% Accurate
UNE	95% Accurate
UNE-P	95% Accurate

SEEM Measure

SEEM	Tier I	Tier II	Tier III
Yes	X	X	

SEEM Disaggregation - Analog/Benchmark

SEEM Disaggregation	SEEM Analog/Benchmark
Resale	95% Accurate
UNE	95% Accurate
UNE-P	95% Accurate

P-12: LNP-Average Disconnect Timeliness Interval & Disconnect Timeliness Interval Distribution

(Deleted)

P-13B: LNP - Percent Out of Service < 60 Minutes

Definition

The Number of LNP related conversions where the time required to facilitate the activation of the port in BellSouth's network is less than 60 minutes, expressed as a percentage of total number of activations that took place.

Exclusions

- CLEC-caused errors
- NPAC caused errors unless caused by BellSouth
- Standalone LNP orders with more than 500 number activations

Business Rules

The Start time is the Receipt of the NPAC broadcast activation message in BellSouth's LSMS. The End time is when the Provisioning event is successfully completed in BellSouth's network as reflected in BellSouth's LSMS. Count the number of activations that took place in less than 60 minutes.

Calculation

Percent Out of Service < 60 Minutes = (a / b) X 100

- a = Number of activations provisioned in less than 60 minutes
- b = Total LNP activations

Report Structure

- CLEC Specific
- CLEC Aggregate
- Geographic Scope
  - State
  - Region

Data Retained

Relating to CLEC Experience

- Order Number
- Telephone Number/Circuit Number
- Committed Due Date
- Date/Time of Recent Change Notice

Relating to BellSouth Performance

- SOCS Completion Date and Time Stamp
- CLEC Activate Message

SQM Disaggregation – Analog/Benchmark

SQM Level of Disaggregation	SQM Analog/Benchmark
• LNP	> = 96.5%

SEEM Measure

SEEM	Tier I	Tier II	Tier III
Yes	X	X	

SEEM Disaggregation - Analog/Benchmark

SEEM Disaggregation	SEEM Analog/Benchmark
• LNP	> = 96.5%

P-13C: LNP – Percentage of Time BellSouth Applies the 10-Digit Trigger Prior to the LNP Order Due Date

Definition

Percentage of time BellSouth applies 10-digit trigger for LNP TNs prior to the due date.

Exclusions

Excludes CLEC or Customer caused misses or delays.

Business Rules

Obtain number of LNP TNs where the 10-digit trigger was applicable prior to due date, and the total number of LNP TNs where the 10-digit trigger was applicable.

Calculation

Percentage of 10-Digit Applications = (a / b) X 100

- a = Count of LNP TNs for which 10-digit trigger was applied prior to due date
- b = Total LNP TNs for which 10-digit triggers were applicable

Report Structure

- CLEC Specific
- CLEC Aggregate
- Geographic Scope
  - State
  - Region

Data Retained

Relating to CLEC Experience

- Order Number
- Telephone Number/Circuit Number
- Committed Due Date
- Date/Time of Recent Change Notice

Relating to BellSouth Performance

- SOCS Completion Date and Time Stamp
- CLEC Activate Message

SQM Disaggregation - Analog/Benchmark

SQM Level of Disaggregation	SQM Analog/Benchmark
• LNP (Standalone)	Benchmark: 95%

SEEM Measure

SEEM	Tier I	Tier II
Yes	X	X

SEEM Disaggregation	SEEM Analog/Benchmark
• LNP (Standalone)	Benchmark: 95%

P-13D: LNP - Average Disconnect Timeliness Interval (Non-Trigger)

Definition

Disconnect Timeliness is defined as the interval between the time ESI Number Manager receives the valid 'Number Ported' message from NPAC (signifying the CLEC 'Activate') until the time the Disconnect is completed in the Central Office switch. This interval effectively measures BellSouth responsiveness by isolating it from impacts that are caused by CLEC related activities.

Exclusions

- Canceled Service Orders
- Order Activities of BellSouth or the CLEC associated with internal or administrative use of local services (Record Orders, Listing Orders, Test Orders, etc.) where identifiable. Order types may be C, N, R, or T.
- CLEC-caused errors
- NPAC-caused errors, unless caused by BellSouth
- Incomplete Ports where only a subset of activate messages have been received compared with the LSR and create messages.
- Orders which are candidates for 10 digit triggers, except those that did not receive 10 digit triggers prior to the port out date.
- LSRs where the CLEC did not contact BST within 30 minutes after Activate Message.

Business Rules

The Disconnect Timeliness interval is determined for each telephone number ported associated with a disconnect service order processed on an LSR during the reporting period. The Disconnect Timeliness interval is the elapsed time from when BellSouth receives a valid 'Number Ported' message in ESI Number Manager (signifying the CLEC 'Activate') for each telephone number ported until each number on the service order is disconnected in the Central Office switch. Elapsed time for each ported number is accumulated for each reporting dimension. The accumulated time for each reporting dimension is then divided by the total number of selected telephone numbers disconnected in the reporting period. Non-Business hours will be excluded from the duration calculation for unscheduled after hours LNP ports. This will yield a benchmark equivalent to by 12:00 noon the next business day thus, keeping the benchmark at 4 hours.

Calculation

Disconnect Timeliness Interval = (a - b)

- a = Completion Date and Time in Central Office switch for each number on disconnect order
- b = Valid 'Number Ported' message received date and time

Average Disconnect Timeliness Interval = (c / d)

- c = Sum of all Disconnect Timeliness Intervals
- d = Total Number of disconnected numbers completed in reporting period

Report Structure

- CLEC Specific
- CLEC Aggregate
- Geographic Scope
  - State
  - Region

Data Retained

Relating to CLEC Experience

- Order Number
- Telephone Number/Circuit Number
- Committed Due Date
- Receipt Date/Time (ESI Number Manager)
- Date/Time of Recent Change Notice

Relating to BellSouth Performance

- SOCS Completion Date and Time Stamp
- CLEC Activate Message

SQM Disaggregation – Analog/Benchmark

SQM Level of Disaggregation	SQM Analog/Benchmark
LNP (Normal Working Hours and Approved After Hours)	95% < = 4 Hours
LNP (Unscheduled After Hours Ports)	95% <= 4 Hours (excluding non-business hours)

SEEM Measure

SEEM	Tier I	Tier II
Yes	X	X

SEEM Disaggregation - Analog/Benchmark

- LNP (Normal Working Hours and Approved After Hours)..... 95% < = 4 Hours
- LNP (Unscheduled After Hours Ports)..... 95% <= 4 Hours (excluding non-business hours)

Section 4: Maintenance & Repair

M&R-1: Missed Repair Appointments

Definition

The percent of customer trouble reports not cleared by the committed date and time.

Exclusions

- Trouble tickets canceled at the CLEC request
- BellSouth trouble reports associated with internal or administrative service
- Customer Provided Equipment (CPE) troubles or CLEC Equipment Trouble

Business Rules

The negotiated commitment date and time is established when the repair report is received. The cleared time is the date and time that BellSouth personnel clear the trouble and closes the trouble report in his/her Computer Access Terminal (CAT) or workstation. If this is after the Commitment time, the report is flagged as a "Missed Commitment" or a missed repair appointment. When the data for this measure is collected for BellSouth and a CLEC, it can be used to compare the percentage of the time repair appointments are missed due to BellSouth reasons. (No access reports are not part of this measure because they are not a missed appointment.)

> **Note**: Appointment intervals vary with force availability in the POTS environment. Specials and Trunk intervals are standard interval appointments of no greater than 24 hours. Standalone LNP historical data is not available in the maintenance systems (LMOS or WFA).

Calculation

Percentage of Missed Repair Appointments = (a / b) X 100

- a = Count of Customer Troubles Not Cleared by the Quoted Commitment Date and Time
- b = Total Customer Trouble reports closed in Reporting Period

Report Structure

- Dispatch/Non-Dispatch
- CLEC Specific
- CLEC Aggregate
- BellSouth Aggregate
- Geographic Scope
  - State
  - Region

Data Retained

Relating to CLEC Experience

- Report Month
- CLEC Company Name
- Submission Date and Time (TICKET_ID)
- Completion Date (CMPLTN_DT)
- Service Type (CLASS_SVC_DESC)
- Disposition and Cause (CAUSE_CD & CAUSE_DESC)

Note: Code in parentheses is the corresponding header found in the raw data file.

Relating to BellSouth Performance

- Report Month
- BellSouth Company Code
- Submission Date and Time
- Completion Date
- Service Type
- Disposition and Cause (Non-Design /Non-Special Only)
- Trouble Code (Design and Trunking Services)

SQM Disaggregation - Analog/Benchmark

SQM Level of Disaggregation	SQM Analog/Benchmark
Resale Residence	Retail Residence
Resale Business	Retail Business
Resale Design	Retail Design
Resale PBX	Retail PBX
Resale Centrex	Retail Centrex
Resale ISDN	Retail ISDN
2W Analog Loop Design	Retail Residence & Business Dispatch
2W Analog Loop Non – Design	Retail Residence & Business (POTS) (Exclusion of Switch-based feature troubles)
UNE Digital Loop < DS1	Retail Digital Loop < DS1
UNE Digital Loop >= DS1	Retail Digital Loop >= DS1
UNE Loop + Port Combinations	Retail Residence and Business
UNE Switch ports	Retail Residence and Business (POTS)
UNE Combo Other	Retail Residence, Business and Design Dispatch
UNE xDSL (HDSL, ADSL and UCL)	ADSL Provided to Retail
UNE ISDN	Retail ISDN – BRI
UNE Line Sharing	ADSL provided to Retail
UNE Other Design	Retail Design
UNE Other Non-Design	Retail Residence and Business
Local Interconnection Trunks	Parity with Retail
Local Transport (Unbundled Interoffice Transport)	Retail DS1/DS3 Interoffice

SEEM Measure

SEEM	Tier I	Tier II
Yes	X	X

SEEM Disaggregation - Analog/Benchmark

SEEM Disaggregation	SEEM Analog/Benchmark
• Resale Residence	Retail Residence
• Resale Business	Retail Business
• Resale Design	Retail Design
• Resale PBX	Retail PBX
• Resale Centrex	Retail Centrex
• Resale ISDN	Retail ISDN
• 2W Analog Loop Design	Retail Residence and Business Dispatch
• 2W Analog Loop Non – Design	Retail Residence and Business (POTS) (Exclusion of Switch-based feature troubles)
• UNE Digital Loop < DS1	Retail Digital Loop < DS1
• UNE Digital Loop >= DS1	Retail Digital Loop >= DS1
• UNE Loop + Port Combinations	Retail Residence & Business
• UNE Switch ports	Retail Residence & Business (POTS)
• UNE Combo Other	Retail Residence, Business and Design Dispatch
• UNE xDSL (HDSL, ADSL and UCL)	ADSL provided to Retail
• UNE ISDN	Retail ISDN – BRI
• UNE Line Sharing	ADSL Provided to Retail
• UNE Other Design	Retail Design
• UNE Other Non-Design	Retail Residence and Business
• Local Transport (Unbundled Interoffice Transport)	Retail DS1/DS3 Interoffice
• Local Interconnection Trunks	Parity with Retail

M&R-2: Customer Trouble Report Rate

Definition

Initial and repeated customer direct or referred customer troubles reported within a calendar month per 100 lines/circuits in service.

Exclusions

- Trouble tickets canceled at the CLEC request.
- BellSouth trouble reports associated with internal or administrative service.
- Customer Provided Equipment (CPE) troubles or CLEC Equipment Trouble.

Business Rules

Customer Trouble Report Rate is computed by accumulating the number of maintenance initial and repeated trouble reports during the reporting period. The resulting number of trouble reports are divided by the total "number of service" lines, ports or combination that exist for the CLECs and BellSouth respectively at the end of the report month.

Calculation

Customer Trouble Report Rate = (a / b) X 100

- a = Count of Initial and Repeated Customer Trouble Reports closed in the Current Period
- b = Number of Service Access Lines in service at End of the Report Period

Report Structure

- CLEC Specific
- CLEC Aggregate
- BellSouth Aggregate
- Dispatch/Non-Dispatch
- Geographic Scope
  - State
  - Region

Data Retained

Relating to CLEC Experience

- Report Month
- CLEC Company Name
- Ticket Submission Date and Time (TICKET_ID)
- Ticket Completion Date (CMPLTN_DT)
- Service Type (CLASS_SVC_DESC)
- Disposition and Cause (CAUSE_CD & CAUSE_DESC)
- # Service Access Lines in Service at the end of period

Note: Code in parentheses is the corresponding header found in the raw data file.

Relating to BellSouth Performance

- Report Month
- BellSouth Company Code
- Ticket Submission Date and Time
- Ticket Completion Date
- Service Type
- Disposition and Cause (Non-Design /Non-Special Only)
- Trouble Code (Design and Trunking Services)
- # Service Access Lines in Service at the end of period

SQM Disaggregation - Analog/Benchmark

SQM Level of Disaggregation	SQM Analog/Benchmark
Resale Residence	Retail Residence
Resale Business	Retail Business
Resale Design	Retail Design
Resale PBX	Retail PBX
Resale Centrex	Retail Centrex
Resale ISDN	Retail ISDN
2W Analog Loop Design	Retail Residence and Business Dispatch
2W Analog Loop Non – Design	Retail Residence and Business (POTS) (Exclusion of Switch-based feature troubles)
UNE Digital Loop < DS1	Retail Digital Loop < DS1
UNE Digital Loop >= DS1	Retail Digital Loop >= DS1
UNE Loop + Port Combinations	Retail Residence and Business
UNE Switch Ports	Retail Residence and Business (POTS)
UNE Combo Other	Retail Residence, Business and Design Dispatch
UNE xDSL (HDSL, ADSL and UCL)	ADSL Provided to Retail
UNE ISDN	Retail ISDN – BRI
UNE Line Sharing	ADSL Provided to Retail
UNE Other Design	Retail Design
UNE Other Non-Design	Retail Residence and Business
Local Interconnection Trunks	Parity with Retail
Local Transport (Unbundled Interoffice Transport)	Retail DS1/DS3 Interoffice

SEEM Measure

SEEM	Tier I	Tier II
Yes	X	X

SEEM Disaggregation - Analog/Benchmark

SEEM Disaggregation	SEEM Analog/Benchmark
Resale Residence	Retail Residence
Resale Business	Retail Business
Resale Design	Retail Design
Resale PBX	Retail PBX
Resale Centrex	Retail Centrex
Resale ISDN	Retail ISDN
2W Analog Loop Design	Retail Residence and Business Dispatch
2W Analog Loop Non – Design	Retail Residence and Business (POTS) (Exclusion of Switch-based feature troubles)
UNE Digital Loop < DS1	Retail Digital Loop < DS1
UNE Digital Loop > DS1	Retail Digital Loop >= DS1
UNE Loop + Port Combinations	Retail Residence and Business
UNE Switch Ports	Retail Residence and Business (POTS)
UNE Combo Other	Retail Residence, Business and Design Dispatch

- UNE xDSL (HDSL, ADSL and UCL) ..... ADSL Provided to Retail
- UNE ISDN ..... Retail ISDN – BRI
- UNE Line Sharing ..... ADSL Provided to Retail
- UNE Other Design..... Retail Design
- UNE Other Non-Design ..... Retail Residence and Business
- Local Transport (Unbundled Interoffice Transport) ..... Retail DS1/DS3 Interoffice
- Local Interconnection Trunks..... Parity with Retail

M&R-3: Maintenance Average Duration

Definition

The Average duration of Customer Trouble Reports from the receipt of the Customer Trouble Report to the time the trouble report is cleared.

Exclusions

- Trouble tickets canceled at the CLEC request.
- BellSouth trouble reports associated with internal or administrative service.
- Customer Provided Equipment (CPE) troubles or CLEC Equipment Trouble.

Business Rules

For Average Duration the clock starts on the date and time of the receipt of the correct report information, i.e. correct telephone number, correct circuit identification, trouble description, etc. for the repair request. The clock stops on the date and time the service is restored and the BellSouth or CLEC customer is notified (when the technician completes the trouble ticket on his/her CAT or work systems).

Calculation

Maintenance Duration = (a - b)

- a = Date and Time of Service Restoration
- b = Date and Time Customer Trouble Ticket was Opened

Average Maintenance Duration = (c / d)

- c = Total of all maintenance durations in the reporting period
- d = Total Closed Customer Troubles in the reporting period

Report Structure

- Dispatch/Non-Dispatch
- CLEC Specific
- CLEC Aggregate
- BellSouth Aggregate
- Geographic Scope
  - State
  - Region

Data Retained

Relating to CLEC Experience

- Report Month
- Total Tickets (LINE_NBR)
- CLEC Company Name
- Ticket Submission Date and Time (TICKET_ID)
- Ticket Completion Date (CMPLTN_DT)
- Service Type (CLASS_SVC_DESC)
- Disposition and Cause (CAUSE_CD & CAUSE_DESC)

Note: Code in parentheses is the corresponding header found in the raw data file.

Relating to BellSouth Performance

- Report Month
- Total Tickets
- BellSouth Company Code
- Ticket Submission Date
- Ticket Submission Time
- Ticket Completion Date
- Ticket Completion Time
- Total Duration Time
- Service Type
- Disposition and Cause (Non-Design/Non-Special Only)
- Trouble Code (Design and Trunking Services)

SQM Disaggregation - Analog/Benchmark

SQM Level of Disaggregation	SQM Analog/Benchmark
Resale Residence	Retail Residence
Resale Business	Retail Business
Resale Design	Retail Design
Resale PBX	Retail PBX
Resale Centrex	Retail Centrex
Resale ISDN	Retail ISDN
2W Analog Loop Design	Retail Residence and Business Dispatch
2W Analog Loop Non – Design	Retail Residence and Business (POTS) (Exclusion of Switch-based feature troubles)
UNE Digital Loop < DS1	Retail Digital Loop < DS1
UNE Digital Loop >= DS1	Retail Digital Loop >= DS1
UNE Loop + Port Combinations	Retail Residence and Business
UNE Switch ports	Retail Residence and Business (POTS)
UNE Combo Other	Retail Residence, Business & Design Dispatch
UNE xDSL (HDSL, ADSL and UCL)	ADSL Provided to Retail
UNE ISDN	Retail ISDN – BRI
UNE Line Sharing	ADSL Provided to Retail
UNE Other Design	Retail Design
UNE Other Non-Design	Retail Residence and Business
Local Transport (Unbundled Interoffice Transport)	Retail DS1/DS3 Interoffice
Local Interconnection Trunks	Parity with Retail

SEEM Measure

SEEM	Tier I	Tier II
Yes	X	X

SEEM Disaggregation - Analog/Benchmark

SEEM Disaggregation	SEEM Analog/Benchmark
Resale Residence	Retail Residence
Resale Business	Retail Business
Resale Design	Retail Design
Resale PBX	Retail PBX
Resale Centrex	Retail Centrex
Resale ISDN	Retail ISDN
2W Analog Loop Design	Retail Residence and Business Dispatch
2W Analog Loop Non – Design	Retail Residence and Business (POTS) (Exclusion of Switch-based feature troubles)
UNE Digital Loop < DS1	Retail Digital Loop < DS1

- UNE Digital Loop >= DS1 ..... Retail Digital Loop >= DS1
- UNE Loop + Port Combinations ..... Retail Residence and Business
- UNE Switch ports ..... Retail Residence and Business (POTS)
- UNE Combo Other ..... Retail Residence, Business and Design Dispatch
- UNE xDSL (HDSL, ADSL and UCL) ..... ADSL Provided to Retail
- UNE ISDN ..... Retail ISDN – BRI
- UNE Line Sharing ..... ADSL Provided to Retail
- UNE Other Design ..... Retail Design
- UNE Other Non-Design ..... Retail Residence and Business
- Local Transport (Unbundled Interoffice Transport) ..... Retail DS1/DS3 Interoffice
- Local Interconnection Trunks ..... Parity with Retail

M&R-4: Percent Repeat Troubles within 30 Days

Definition

Percent Customer Repeat Troubles within 30 Days measures the percent of customer troubles, during the current reporting period, that had at least one prior trouble ticket on the same line/circuit, anytime in the proceeding 30 calendar days from the receipt of the current trouble report.

Exclusions

- Trouble tickets canceled at the CLEC request.
- BellSouth trouble reports associated with internal or administrative service.
- Customer Provided Equipment (CPE) troubles or CLEC Equipment Trouble.

Business Rules

This measure includes Customer trouble reports on the same line/circuit, received within 30 days of an original Customer trouble report, using the 'cleared date' of the first trouble and the 'received date' of the next trouble.

Calculation

Percent Repeat Customer Troubles within 30 Days = (a / b) X 100

- a = Count of Customer Troubles using the 'received date' where more than one trouble report was logged for the same service line/circuit, within a continuous 30 days
- b = Count of Total Customer Trouble Reports using the 'cleared date', in the Reporting Period

Report Structure

- Dispatch/Non-Dispatch
- CLEC Specific
- CLEC Aggregate
- BellSouth Aggregate
- Geographic Scope
  - State
  - Region

Data Retained

Relating to CLEC Experience

- Report Month
- Total Tickets (LINE_NBR)
- CLEC Company Name
- Ticket Submission Date and Time (TICKET_ID)
- Ticket Completion Date (CMPLTN_DT)
- Total and Percent Repeat Customer Trouble Reports within 30 Days (TOT_REPEAT)
- Service Type
- Disposition and Cause (CAUSE_CD & CAUSE_DESC)

Note: Code in parentheses is the corresponding header found in the raw data file.

Relating to BellSouth Performance

- Report Month

- Total Tickets
- BellSouth Company Code
- Ticket Submission Date
- Ticket Submission Time
- Ticket Completion Date
- Ticket Completion Time
- Total and Percent Repeat Customer Trouble Reports within 30 Days
- Service Type
- Disposition and Cause (Non-Design /Non-Special Only)
- Trouble Code (Design and Trunking Services)

SQM Disaggregation - Analog/Benchmark

SQM Level of Disaggregation	SQM Analog/Benchmark
Resale Residence	Retail Residence
Resale Business	Retail Business
Resale Design	Retail Design
Resale PBX	Retail PBX
Resale Centrex	Retail Centrex
Resale ISDN	Retail ISDN
2W Analog Loop Design	Retail Residence and Business Dispatch
2W Analog Loop Non – Design	Retail Residence and Business (POTS) (Exclusion of Switch-based feature troubles)
UNE Digital Loop < DS1	Retail Digital Loop < DS1
UNE Digital Loop >= DS1	Retail Digital Loop >= DS1
UNE Loop + Port Combinations	Retail Residence and Business
UNE Switch ports	Retail Residence and Business (POTS)
UNE Combo Other	Retail Residence, Business and Design Dispatch
UNE xDSL (HDSL, ADSL and UCL)	ADSL Provided to Retail
UNE ISDN	Retail ISDN – BRI
UNE Line Sharing	ADSL Provided to Retail
UNE Other Design	Retail Design
UNE Other Non-Design	Retail Residence and Business
Local Transport (Unbundled Interoffice Transport)	Retail DS1/DS3 Interoffice
Local Interconnection Trunks	Parity with Retail

SEEM Measure

SEEM	Tier I	Tier II
Yes	X	X

SEEM Disaggregation - Analog/Benchmark

SEEM Disaggregation	SEEM Analog/Benchmark
Resale Residence	Retail Residence
Resale Business	Retail Business
Resale Design	Retail Design
Resale PBX	Retail PBX
Resale Centrex	Retail Centrex
Resale ISDN	Retail ISDN
2W Analog Loop Design	Retail Residence and Business Dispatch
2W Analog Loop Non – Design	Retail Residence and Business (POTS) (Exclusion of Switch-based feature troubles)
UNE Digital Loop < DS1	Retail Digital Loop < DS1
UNE Digital Loop >= DS1	Retail Digital Loop >= DS1
UNE Loop + Port Combinations	Retail Residence and Business
UNE Switch ports	Retail Residence and Business (POTS)
UNE Combo Other	Retail Residence, Business and Design Dispatch

- UNE xDSL (HDSL, ADSL and UCL) ..... ADSL Provided to Retail
- UNE ISDN ..... Retail ISDN – BRI
- UNE Line Sharing ..... ADSL Provided to Retail
- UNE Other Design..... Retail Design
- UNE Other Non-Design ..... Retail Residence and Business
- Local Transport (Unbundled Interoffice Transport) ..... Retail DS1/DS3 Interoffice
- Local Interconnection Trunks..... Parity with Retail

M&R-5: Out of Service (OOS) > 24 Hours

Definition

For Out of Service Customer Troubles (no dial tone, cannot be called or cannot call out) the percentage of Total OOS Customer Troubles cleared in excess of 24 hours. (All design services are considered to be out of service).

Exclusions

- Trouble Reports canceled at the CLEC request
- BellSouth Trouble Reports associated with administrative service
- Customer Provided Equipment (CPE) Troubles or CLEC Equipment Troubles.

Business Rules

Customer Trouble reports that are out of service and cleared in excess of 24 hours. The clock begins when the customer trouble report is created in LMOS/WFA and the customer trouble is counted if the elapsed time exceeds 24 hours.

Calculation

Out of Service (OOS) > 24 hours = (a / b) X 100

- a = Total Cleared Customer Troubles OOS > 24 Hours
- b = Total OOS Customer Troubles in Reporting Period

Report Structure

- Dispatch/Non-Dispatch
- CLEC Specific
- BellSouth Aggregate
- CLEC Aggregate
- Geographic Scope
  - State
  - Region

Data Retained

Relating to CLEC Experience

- Report Month
- Total Tickets
- CLEC Company Name
- Ticket Submission Date and Time (TICKET_ID)
- Ticket Completion Date (CMPLTN_DT
- Percentage of Customer Troubles out of Service > 24 Hours (OOS>24_FLAG)
- Service type (CLASS_SVC_DESC)
- Disposition and Cause (CAUSE_CD & CAUSE-DESC)

Note: Code in parentheses is the corresponding header found in the raw data file.

Relating to BellSouth Performance

- Report Month
- Total Tickets
- BellSouth Company Code
- Ticket Submission Date
- Ticket Submission time
- Ticket Completion Date
- Ticket Completion Time
- Percent of Customer Troubles out of Service > 24 Hours
- Service Type
- Disposition and Cause (Non-Design/Non-Special only)
- Trouble Code (Design and Trunking Services)

SQM Disaggregation - Analog/Benchmark

SQM Level of Disaggregation	SQM Analog/Benchmark
Resale Residence	Retail Residence
Resale Business	Retail Business
Resale Design	Retail Design
Resale PBX	Retail PBX
Resale Centrex	Retail Centrex
Resale ISDN	Retail ISDN
2W Analog Loop Design	Retail Residence and Business Dispatch
2W Analog Loop Non – Design	Retail Residence and Business (POTS) (Exclusion of Switch-based feature troubles)
UNE Digital Loop < DS1	Retail Digital Loop < DS1
UNE Digital Loop >= DS1	Retail Digital Loop >= DS1
UNE Loop + Port Combinations	Retail Residence and Business
UNE Switch ports	Retail Residence and Business (POTS)
UNE Combo Other	Retail Residence, Business and Design Dispatch
UNE xDSL (HDSL, ADSL and UCL)	ADSL provided to Retail
UNE ISDN	Retail ISDN – BRI
UNE Line Sharing	ADSL Provided to Retail
UNE Other Design	Retail Design
UNE Other Non-Design	Retail Residence and Business
Local Transport (Unbundled Interoffice Transport)	Retail DS1/DS3 Interoffice
Local Interconnection Trunks	Parity with Retail

SEEM Measure

SEEM	Tier I	Tier II
Yes	X	X

SEEM Disaggregation - Analog/Benchmark

SEEM Disaggregation	SEEM Analog/Benchmark
Resale Residence	Retail Residence
Resale Business	Retail Business
Resale Design	Retail Design
Resale PBX	Retail PBX
Resale Centrex	Retail Centrex
Resale ISDN	Retail ISDN
2W Analog Loop Design	Retail Residence and Business Dispatch
2W Analog Loop Non – Design	Retail Residence and Business (POTS) (Exclusion of Switch-based feature troubles)
UNE Digital Loop < DS1	Retail Digital Loop < DS1

- UNE Digital Loop >= DS1 ..... Retail Digital Loop >= DS1
- UNE Loop + Port Combinations ..... Retail Residence and Business
- UNE Switch Ports ..... Retail Residence and Business (POTS)
- UNE Combo Other ..... Retail Residence, Business and Design Dispatch
- UNE xDSL (HDSL, ADSL and UCL) ..... ADSL Provided to Retail
- UNE ISDN ..... Retail ISDN – BRI
- UNE Line Sharing ..... ADSL Provided to Retail
- UNE Other Design ..... Retail Design
- UNE Other Non-Design ..... Retail Residence and Business
- Local Transport (Unbundled Interoffice Transport) ..... Retail DS1/DS3 Interoffice
- Local Interconnection Trunks ..... Parity with Retail

M&R-6: Average Answer Time – Repair Centers

Definition

This report measures the average time a customer is in queue when calling a BellSouth Repair Center.

Exclusions

- Abandoned Calls

Business Rules

The clock starts when a CLEC Representative or BellSouth customer makes a choice on the Repair Center's menu and is put in queue for the next repair attendant. The clock stops when the repair attendant answers the call.

Note: The Total Column is a combined BellSouth Residence and Business number.

Calculation

Answer Time for BellSouth Repair Centers = (a - b)

- a = Time BellSouth Repair Attendant Answers Call
- b = Time of entry into queue after ACD Selection

Average Answer Time for BellSouth Repair Centers = (c / d)

- c = Sum of all Answer Times
- d = Total number of calls by reporting period

Report Structure

- CLEC Aggregate
- BellSouth Aggregate
- Geographic Scope
  - Region

Data Retained

Relating to CLEC Experience

- CLEC Average Answer Time

Relating to BellSouth Performance

- BellSouth Average Answer Time

SQM Disaggregation - Analog/Benchmark

SQM Level of Disaggregation

- Region. CLEC/BellSouth Service Centers and BellSouth Repair Centers are regional.

SQM Analog/Benchmark

- For CLEC, Average Answer Times in UNE Center and BRMC are comparable to the Average Answer Times in the BellSouth Repair Centers.

SEEM Measure

SEEM	Tier I	Tier II
No		

SEEM Disaggregation - Analog/Benchmark

SEEM Disaggregation	SEEM Analog/Benchmark
• Not Applicable	Not Applicable

M&R-7: Mean Time To Notify CLEC of Network Outages

Definition

BellSouth will inform the CLEC and appropriate BellSouth personnel of any Network outages (customer impacting).

Exclusions

None

Business Rules

The time it takes for the Network Management Center (NMC) to notify the CLEC and appropriate BellSouth personnel of a customer impacting network incident in equipment that may be utilized by the CLEC. When BellSouth becomes aware of a network incident, the CLEC and appropriate BellSouth personnel will be notified electronically. The notification time for each outage will be measured in minutes and divided by the number of outages for the reporting period. The CLECs will be notified the same way and at the same time as BellSouth personnel. These are broadcast messages. It is up to those receiving the message to determine if they have customers affected by the incident.

Calculation

Time to Notify = (a - b)

- a = Date and Time NMC Notified
- b = Date and Time NMC detected network incident

Mean Time to Notify = (c / d)

- c = Sum of all Times to Notify
- d = Count of all Network Incidents

Report Structure

- BellSouth Aggregate
- CLEC Aggregate
- CLEC Specific
- Geographic Scope
  - Region

Data Retained

Relating to CLEC Experience

- Report Month
- Major Network Events
- Date/Time of Incident
- Date/Time of Notification

Relating to BellSouth Performance

- Report Month
- Major Network Events
- Date/Time of Incident
- Date/Time of Notification

SQM Disaggregation - Analog/Benchmark

SQM Level of Disaggregation	SQM Analog/Benchmark
• BellSouth Aggregate	Parity with Retail
• CLEC Aggregate	Parity with Retail
• CLEC Specific	Parity with Retail

SEEM Measure

SEEM	Tier I	Tier II
No		

SEEM Disaggregation - Analog/Benchmark

SEEM Disaggregation	SEEM Analog/Benchmark
• Not Applicable	Not Applicable

Section 5: Billing

B-1: Invoice Accuracy

Definition

This measure provides the percentage of accuracy of the billing invoices rendered to CLECs during the current month.

Exclusions

- Adjustments not related to billing errors (e.g., credits for service outage, special promotion credits, adjustments to satisfy the customer)
- Test Accounts

Business Rules

The accuracy of billing invoices delivered by BellSouth to the CLEC must enable them to provide a degree of billing accuracy comparative to BellSouth bills rendered to retail customers of BellSouth. CLECs request adjustments on bills determined to be incorrect. The BellSouth Billing verification process includes manually analyzing a sample of local bills from each bill period. The bill verification process draws from a mix of different customer billing options and types of service. An end-to-end auditing process is performed for new products and services. Internal measurements and controls are maintained on all billing processes. The CLEC-specific raw data file (which is available on the PMAP web site) will contain the number of bills and adjustments for the reporting month. The number of bills and bill adjustments will be displayed by OCN and/or ACNA.

Calculation

Invoice Accuracy = [(a - b) / a] X 100

- a = Absolute Value of Total Billed Revenues during current month
- b = Absolute Value of Total Billing Related Adjustments during current month

Measure of Adjustments = [(c-d) / c] X 100

- c = Number of Bills in current month
- d = Number of Billing-related Adjustments in current month

Report Structure

- CLEC Specific
- CLEC Aggregate
- BellSouth Aggregate
- Geographic Scope
  - State
  - Region
- Number of Adjustments

Data Retained

Relating to CLEC Experience

- Report Month
- Invoice Type
  - UNE
  - Resale
  - Interconnection

- Total Billed Revenue
- Total Billing Related Adjustments
- Number of Bills
- Number of Adjustments

Relating to BellSouth Performance

- Report Month
- Retail Type
  - CRIS
  - CABS
- Total Billed Revenue
- Total Billing Related Adjustments

SQM Disaggregation - Analog/Benchmark

SQM Level of Disaggregation	SQM Analog/Benchmark
• Product/Invoice Type	Parity with BellSouth Retail Aggregate
- Resale	
- UNE	
- Interconnection	

SEEM Measure

SEEM	Tier I	Tier II
Yes	X	X

SEEM Disaggregation - Analog/Benchmark

SEEM Disaggregation	SEEM Analog/Benchmark
• Resale	Parity with Retail
• UNE	
• Interconnection	

B-2: Mean Time to Deliver Invoices

Definition

This report measures the mean interval for timeliness of billing invoices sent to CLECs in an agreed upon format. CRIS-based invoices are measured in business days, and CABS-based invoices in calendar days.

Exclusions

None

Business Rules

Bill Distribution is calculated as follows: CRIS BILLS-The number of workdays is reported for CRIS bills. This is calculated by counting the Bill Period date as the first workday. Weekends and holidays are excluded when counting workdays. J/N Bills are counted in the CRIS work day category for the purposes of the measurement since their billing account number (Q account) is provided from the CRIS system.

CABS BILLS-The number of calendar days is reported for CABS bills. This is calculated by counting the day following the Bill Period date as the first calendar day. Weekends and holidays are included when counting the calendar days.

Calculation

Invoice Timeliness = (a - b)

- a = Invoice Transmission Date
- b = Close Date of Scheduled Bill Cycle

Mean Time To Deliver Invoices = (c / d)

- c = Sum of all Invoice Timeliness intervals
- d = Count of Invoices Transmitted in Reporting Period

Report Structure

- CLEC Specific
- CLEC Aggregate
- BellSouth Aggregate
- Geographic Scope
  - State
  - Region

Data Retained

Relating to CLEC Experience

- Report Month
- Invoice Type
  - UNE
  - Resale
  - Interconnection
  - State
- Invoice Transmission Count
- Date of Scheduled Bill Close

Relating to BellSouth Performance

- Report Month
- Invoice Type
  - CRIS
  - CABS
- Invoice Transmission Count
- Date of Scheduled Bill Close

SQM Disaggregation - Analog/Benchmark

SQM Level of Disaggregation

Product/Invoice Type

- Resale
- UNE
- Interconnection
- State

SQM Analog/Benchmark

- CLEC Average Delivery Intervals for both CRIS and CABS Invoices are comparable to BellSouth Average delivery for both systems.

SEEM Measure

SEEM	Tier I	Tier II
Yes	X	X

SEEM Disaggregation - Analog/Benchmark

SEEM Disaggregation	SEEM Analog/Benchmark
CLEC State	Parity with Retail
- CRIS	
- CABS	
BST-State	

B-3: Usage Data Delivery Accuracy

Definition

This measurement captures the percentage of recorded usage that is delivered error free and in an acceptable format to the appropriate Competitive Local Exchange Carrier (CLEC). These percentages will provide the necessary data for use as a comparative measurement for BellSouth performance. This measurement captures Data Delivery Accuracy rather than the accuracy of the individual usage recording.

Exclusions

None

Business Rules

The accuracy of the data delivery of usage records delivered by BellSouth to the CLEC must enable them to provide a degree of accuracy comparative to BellSouth bills rendered to their retail customers. If errors are detected in the delivery process, they are investigated, evaluated and documented. Errors are corrected and the data retransmitted to the CLEC.

Calculation

Usage Data Delivery Accuracy (Packs) = (a - b) / a X 100 **(This calculation not ordered by the FPSC)**

- a = Total number of usage data packs sent during current month
- b = Total number of usage data packs requiring retransmission during current month

Usage Data Delivery Accuracy (Records) = (c - d) / c X 100

- c = Total number of usage records sent during current month
- d = Total number of usage records requiring retransmission during current month

Report Structure

- CLEC Aggregate
- BellSouth Aggregate
- Geographic Scope
  - Region

Data Retained

Relating to CLEC Experience

- Report Month
- Record Type
  - BellSouth Recorded
  - Non-BellSouth Recorded
- Number of Records
- Packs

Relating to BellSouth Performance

- Report Month
- Record Type
- Number of Records
- Packs

SQM Disaggregation - Analog/Benchmark

SQM Level of Disaggregation	SQM Analog/Benchmark
• Region	Parity With Retail

SEEM Measure

SEEM	Tier I	Tier II
Yes	X	X

SEEM Disaggregation - Analog/Benchmark

SEEM Disaggregation	SEEM Analog/Benchmark
• CLEC State (In Florida, SEEM is based on records)	Parity with Retail
• BellSouth Region	

B-4: Usage Data Delivery Completeness

Definition

This measurement provides percentage of complete and accurately recorded usage data (usage recorded by BellSouth and usage recorded by other companies and sent to BellSouth for billing) that is processed and transmitted to the CLEC within thirty (30) days of the message recording date. A parity measure is also provided showing completeness of BellSouth messages processed and transmitted via CMDS. BellSouth delivers its own retail usage from recording location to billing location via CMDS as well as delivering billing data to other companies. Timeliness, Completeness and Mean Time to Deliver Usage measures are reported on the same report.

Exclusions

None

Business Rules

The purpose of these measurements is to demonstrate the level of quality of usage data delivered to the appropriate CLEC. Method of delivery is at the option of the CLEC.

Calculation

Usage Data Delivery Completeness = (a / b) X 100

- a = Total number of Recorded usage records delivered during current month that are within thirty (30) days of the message recording date
- b = Total number of Recorded usage records delivered during the current month

Report Structure

- CLEC Specific
- CLEC Aggregate
- Region

Data Retained

Relating to CLEC Experience

- Report Month
- Record Type
  - BellSouth Recorded
  - Non-BellSouth Recorded

Relating to BellSouth Performance

- None

SQM Disaggregation - Analog/Benchmark

SQM Level of Disaggregation	SQM Analog/Benchmark
Region	>= 98% within 30 Calendar Days

SEEM Measure

SEEM	Tier I	Tier II
No		

SEEM Disaggregation - Analog/Benchmark

SEEM Disaggregation	SEEM Analog/Benchmark
• Not Applicable	Not Applicable

B-5: Usage Data Delivery Timeliness

Definition

This measurement provides a percentage of recorded usage data (usage recorded by BellSouth and usage recorded by other companies and sent to BellSouth for billing) that is delivered to the appropriate CLEC within six (6) calendar days from the receipt of the initial recording. A parity measure is also provided showing timeliness of BellSouth messages processed and transmitted via CMDS. Timeliness, Completeness and Mean Time to Deliver Usage measures are reported on the same report.

Exclusions

None

Business Rules

The purpose of this measurement is to demonstrate the level of timeliness for processing and transmission of usage data delivered to the appropriate CLEC. The usage data will be mechanically transmitted or mailed to the CLEC data processing center once daily. The Timeliness interval of usage recorded by other companies is measured from the date BellSouth receives the records to the date BellSouth distributes to the CLEC. Method of delivery is at the option of the CLEC

Calculation

Usage Data Delivery Timeliness Current month = (a / b) X 100

- a = Total number of usage records sent within six (6) calendar days from initial recording/receipt
- b = Total number of usage records sent

Report Structure

- CLEC Aggregate
- CLEC Specific
- Region

Data Retained

Relating to CLEC Experience

- Report Month
- Record Type
  - BellSouth Recorded
  - Non-BellSouth Recorded

Relating to BellSouth Performance

- None

SQM Level of Disaggregation - Analog/Benchmark

SQM Level of Disaggregation	SQM Analog/Benchmark
• Region	>= 95% Delivered within 6 Calendar Days

SEEM Measure

SEEM	Tier I	Tier II
No		

SEEM Disaggregation - Analog/Benchmark

SEEM Disaggregation	SEEM Analog/Benchmark
• Not Applicable	Not Applicable

B-6: Mean Time to Deliver Usage

Definition

This measurement provides the average time it takes to deliver Usage Records to a CLEC. A parity measure is also provided showing timeliness of BellSouth messages processed and transmitted via CMDS. Timeliness, Completeness and Mean Time to Deliver Usage measures are reported on the same report.

Exclusions

None

Business Rules

The purpose of this measure is to calculate the average number of days it takes BellSouth to deliver usage data to the appropriate CLEC. The calculation reflects the differences between the date the data is transmitted or mailed to the CLEC and the date the data is generated by Customer divided by the total record volume delivery.

Each delivery record is calculated as the time, in days, between when the customer generates the call and when BellSouth delivers the usage data to the CLEC. Each delivery record is categorized by the resulting number of days.

An estimated interval is calculated for each category by taking the total number of usage data records delivered for that period and multiplying it by the total number of days in that period. The mean (average) time to deliver the usage data is calculated by summing all estimated intervals and dividing by the total number of records delivered.

> **Note:** Any usage record falling in the 30+ day interval will be added using an average figure of 31.5 days.

Usage data is mechanically transmitted or mailed to the CLEC data processing center once daily. Method of delivery is at the option of the CLEC.

Calculation

Delivery Interval Record = (a - b)

- a = Date BellSouth delivers the usage data
- b = Date usage data is generated by the customer

Estimated Interval = (c X d)

- c = Number of records delivered in each category
- d = Number of days to deliver for the category

Mean Time to Deliver Usage = (e / f)

- e = Sum of all estimated intervals
- f = Total number of records delivered

Report Structure

- CLEC Aggregate
- CLEC Specific
- Region

Data Retained

Relating to CLEC Experience

- Report Month
- Record Type
  - BellSouth Recorded
  - Non-BellSouth Recorded

Relating to BellSouth Performance

- None

SQM Level of Disaggregation - Analog/Benchmark

SQM Level of Disaggregation	SQM Analog/Benchmark
• Region	<= 6 Days

SEEM Measure

SEEM	Tier I	Tier II
No		

SEEM Disaggregation - Analog/Benchmark

SEEM Disaggregation	SEEM Analog/Benchmark
• Not Applicable	Not Applicable

B-7: Recurring Charge Completeness

Definition

This measure captures percentage of fractional recurring charges appearing on the correct bill.

Exclusions

None

Business Rules

The effective date of the recurring charge must be within 30 days of the bill date for the charge to appear on the correct bill. The count of fractional recurring charges in the calculation refers to a sum of absolute total dollar values either billed on the correct bill or absolute value of total fractional recurring charges on the bill.

Calculation

Recurring Charge Completeness = (a / b) X 100

- a = Count of fractional recurring charges that are on the correct bill[1]
- b = Total count of fractional recurring charges that are on the bill

[1]Correct bill = next available bill

Report Structure

- CLEC Specific
- CLEC Aggregate
- BellSouth Aggregate

Data Retained

Relating to CLEC Experience

- Report Month
- Invoice Type
- Total Recurring Charges Billed
- Total Billed On Time

Relating to BellSouth Performance

- Report Month
- Retail Analog
- Total Recurring Charges Billed
- Total Billed On Time

SQM Level of Disaggregation - Analog/Benchmark

SQM Level of Disaggregation	SQM Analog/Benchmark
Product/Invoice Type	
• Resale	Parity
• UNE	Benchmark 90%
• Interconnection	Benchmark 90%

SEEM Measure

SEEM	Tier I	Tier II
No		

SEEM Disaggregation - Analog/Benchmark

SEEM Disaggregation	SEEM Analog/Benchmark
• Not Applicable	Not Applicable

B-8: Nonrecurring Charge Completeness

Definition

This measure captures percentage of nonrecurring charges appearing on the correct bill.

Exclusions

None

Business Rules

The effective date of the nonrecurring charge must be within 30 days of the bill date for the charge to appear on the correct bill. The count of nonrecurring charges in the calculation refers to a sum of absolute total dollar values either billed on the correct bill or absolute value of total nonrecurring charges on the bill.

Calculation

Nonrecurring Charge Completeness = (a / b) X 100

- a = Count of nonrecurring charges that are on the correct bill[1]
- b = Total count of nonrecurring charges that are on the bill

[1]Correct bill = next available bill

Report Structure

- CLEC Specific
- CLEC Aggregate
- BellSouth Aggregate
- Geographic Scope
  - State

Data Retained

Relating to CLEC Experience

- Report Month
- Invoice Type
- Total Nonrecurring Charges Billed
- Total Billed On Time

Relating to BellSouth Performance

- Report Month
- Retail Analog
- Total Nonrecurring Charges Billed
- Total Billed On Time

SQM Level of Disaggregation - Analog/Benchmark

SQM Level of Disaggregation	SQM Analog/Benchmark
Product/Invoice Type	
• Resale	Parity
• UNE	Benchmark 90%
• Interconnection	Benchmark 90%

SEEM Measure

SEEM	Tier I	Tier II
No		

SEEM Disaggregation - Analog/Benchmark

SEEM Disaggregation	SEEM Analog/Benchmark
• Not Applicable	Not Applicable

B-9: Percent Daily Usage Feed Errors Corrected in "X" Business Days

Definition

Measures the timely correction of Daily Usage Feed (DUF) errors in record information and Pack formats measured separately. Errors included (1) Pack Failure errors and (2) EMI content errors in records.

Exclusions

- Usage that cannot be corrected and resent or usage that the CLEC doesn't want Retransmitted.
- CLEC Problem/Issue/File Retransmission forms disputed by BellSouth SMEs that do not result in an EMI error.
- CLEC notification received by BellSouth > 10 business days from transmission date of errored messages or packs.

Business Rules

This measure will provide the % of errors corrected in "X" Business days.

Pack Failure errors are defined as a DUF header/trailer error containing one or more of the following conditions: Grand total records not equal to records in pack or sequence/invoice numbers for a from RAO is not sequential

EMI content errors are defined as those records with errors contained in the EMI detail records that cause a message to be unbillable by the CLEC

Only notification received via the CLEC Problem/Issue/File Retransmission form will be included in this measure. To locate the form, go to the PMAP web site (http://pmap.bellsouth.com/) and click the Documentation/Exhibits link, then select the "CLEC Problem/Issue/File Retransmission form."

When circumstances arise for multiple content errors it is not necessary for the form to be filled out in its entirety, the CLECs agree to provide sufficient information for content error research so that a thorough investigation and resolution can be completed.

For each type error condition, a new CLEC Problem/Issue/File Retransmission form should be submitted.

EMI content errors should be attached in a separate file from the CLEC Problem/Issue/File Retransmission form

Elapsed time is measured in business days.

The clock starts when BellSouth receives CLEC's Problem/Issue/File Retransmission form.

The clock stops when BellSouth provides the corrected usage to the CLEC using the predesignated DUF delivery method.

This measure applies only to CLECs that are ODUF and ADUF participants

Calculation

Timeliness of Daily Usage EMI Content Errors Corrected = (a / b) X 100

- a = Total number of Daily Usage Records with EMI Content Errors Corrected in the reporting month within 10 Business Days.
- b = Total number of Daily Usage Records with EMI Content Errors corrected in reporting month.

Timeliness of Daily Usage Pack Format Errors Corrected = (c / d) X 100

- c = Total number of Daily Usage Packs with Format Errors Corrected in the reporting month within 4 Business Days.
- d = Total number of Daily Usage Packs with Format Errors corrected in reporting month

Report Structure

- CLEC Specific
  - Total number of BST disputed Daily Usage Records with EMI Content Errors received in reporting month.
  - Total number of Daily Usage Records with EMI Content Errors received in reporting month.
  - Total number of BST disputed Daily Usage Packs with Format Errors received in reporting month
  - Total number of Daily Usage Packs with Format Errors received in reporting month
- CLEC Aggregate
- Geographic Scope
  - Region

Data Retained

Relating to CLEC Experience

- Report Month
  - BellSouth Recorded
  - Non-BellSouth Recorded

Relating to BellSouth Performance

- None

SQM Level of Disaggregation - Analog/Benchmark

SQM Level of Disaggregation	SQM Analog/Benchmark
• Region	Diagnostic

SEEM Measure

SEEM	Tier I	Tier II
No		

SEEM Disaggregation - Analog/Benchmark

SEEM Disaggregation	SEEM Analog/Benchmark
• Not Applicable	Not Applicable

B-10: Percent Billing Errors Corrected in "X" Business Days

Definition

Measures timely carrier bill adjustments.

Exclusions

Adjustments that are initiated by BellSouth

Business Rules

This measure applies to CLEC wholesale bill adjustment requests. IXC Access billing adjustment requests are not reflected in this measure. Elapsed time is measured in business days. The clock starts when BellSouth receives the CLEC Billing Adjustment Request (BAR) form and the clock stops when BellSouth either makes an adjustment through BOCRIS or ACATS (generally next CLEC bill unless adjustment request after middle of the month) or BellSouth denies the request in BDATS or ACATS and BellSouth notifies the CLEC of the BAR resolution. BellSouth will report separately those adjustment requests that are disputed by BellSouth. (BAR form and instructions are found at www.interconnection.bellsouth.com/forms/html/billing&collections.html).

Calculation

Percent Billing Errors Corrected in 45 Business Days = (a / b) X 100

- a = Number of BAR resolutions sent in 45 Business Days
- b = Total Number of BAR resolutions due in Reporting Period

Report Structure

- CLEC Specific
- CLEC Aggregate
- Geographic Scope
  - State
  - Region

Data Retained

Relating to CLEC Experience

- Number of BellSouth Adjustments in 45 Business Days
- Total number of Billing Adjustment Requests in Reporting Period
- Number of Adjustments disputed by BellSouth (reported separately)

Relating to BellSouth Performance

- None

SQM Disaggregation - Retail Analog/Benchmark

SQM Level of Disaggregation	SQM Analog/Benchmark
• State	90% Billing Disputes <= 45 Business Days

SEEM Measure

SEEM	Tier I	Tier II
Yes	X	X

SEEM Disaggregation - Analog/Benchmark

SEEM Disaggregation	SEEM Analog/Benchmark
• State	90% Billing Disputes <= 45 Business Days

Note: In order to set an appropriate penalty provision, staff recommends deferring implementation of the penalty until conclusion of the commission proceeding on the remedy structure of the SEEM Plan, or 120 days, whichever comes first.

Section 6: Operator Services and Directory Assistance

OS-1: Speed to Answer Performance/Average Speed to Answer – Toll

Definition

Measurement of the average time in seconds calls wait before answered by a toll operator.

Exclusions

None

Business Rules

The clock starts when the customer enters the queue and the clock stops when a BellSouth representative answers the call or the customer abandons the call. The length of each call is determined by measuring, using a scanning technique, and accumulating the elapsed time from the entry of a customer call into the BellSouth call management system queue until the customer call is abandoned or transferred to BellSouth personnel assigned to handle calls for assistance. The system makes no distinction between CLEC customers and BellSouth customers.

Calculation

Speed to Answer Performance/Average Speed to Answer – Toll = a / b

- a = Total queue time
- b = Total calls answered

Note: Total queue time includes time that answered calls wait in queue as well as time abandoned calls wait in queue prior to abandonment.

Report Structure

- Reported for the aggregate of BellSouth and CLECs
  - State

Data Retained (on Aggregate Basis)

- For the items below, BellSouth's Performance Measurement Analysis Platform (PMAP) receives a final computation; therefore, no raw data file is available in PMAP
- Month
- Call Type (Toll)
- Average Speed of Answer

SQM Disaggregation - Analog/Benchmark

SQM Level of Disaggregation	SQM Analog/Benchmark
None	Parity by Design

SEEM Measure

SEEM	Tier I	Tier II
No		

SEEM Disaggregation - Analog/Benchmark

SEEM Disaggregation	SEEM Analog/Benchmark
• Not Applicable	Not Applicable

OS-2: Speed to Answer Performance/Percent Answered within "X" Seconds – Toll

Definition

Measurement of the percent of toll calls that are answered in less than ten seconds

Exclusions

None

Business Rules

The clock starts when the customer enters the queue and the clock stops when a BellSouth representative answers the call or the customer abandons the call. The length of each call is determined by measuring, using a scanning technique, and accumulating the elapsed time from the entry of a customer call into the BellSouth call management system queue until the customer call is abandoned or transferred to BellSouth personnel assigned to handle calls for assistance. The system makes no distinction between CLEC customers and BellSouth customers.

Calculation

The Percent Answered within "X" Seconds measurement for toll is derived by using the BellCore Statistical Answer Conversion Tables, to convert the Average Speed to Answer measure into a percent of calls answered within "X" seconds. The BellCore Conversion Tables are specific to the defined parameters of work time, number of operators, max queue size and call abandonment rates.

Report Structure

- Reported for the aggregate of BellSouth and CLECs
  - State

Data Retained (on Aggregate Basis)

- For the items below, BellSouth's Performance Measurement Analysis Platform (PMAP) receives a final computation; therefore, no raw data file is available in PMAP
- Month
- Call Type (Toll)
- Average Speed of Answer

SQM Disaggregation - Analog/Benchmark

SQM Level of Disaggregation: **SQM Analog/Benchmark**

- None ..... Parity by Design

SEEM Measure

SEEM	Tier I	Tier II
No	.....	.....

SEEM Disaggregation - Analog/Benchmark

SEEM Disaggregation	SEEM Analog/Benchmark
• Not Applicable	Not Applicable

DA-1: Speed to Answer Performance/Average Speed to Answer – Directory Assistance (DA)

Definition

Measurement of the average time in seconds calls wait before answered by a DA operator.

Exclusions

None

Business Rules

The clock starts when the customer enters the queue and the clock stops when a BellSouth representative answers the call or the customer abandons the call. The length of each call is determined by measuring, using a scanning technique, and accumulating the elapsed time from the entry of a customer call into the BellSouth call management system queue until the customer call is abandoned or transferred to BellSouth personnel assigned to handle calls for assistance. The system makes no distinction between CLEC customers and BellSouth customers.

Calculation

Speed to Answer Performance/Average Speed to Answer – Directory Assistance (DA) = a / b

- a = Total queue time
- b = Total calls answered

Note: Total queue time includes time that answered calls wait in queue as well as time abandoned calls wait in queue prior to abandonment.

Report Structure

- Reported for the aggregate of BellSouth and CLECs
  - State

Data Retained (on Aggregate Basis)

- For the items below, BellSouth's Performance Measurement Analysis Platform (PMAP) receives a final computation; therefore, no raw data file is available in PMAP
- Month
- Call Type (DA)
- Average Speed of Answer

SQM Level of Disaggregation - Analog/Benchmark

SQM Level of Disaggregation	SQM Analog/Benchmark
None	Parity by Design

SEEM Measure

SEEM	Tier I	Tier II
No		

SEEM Disaggregation - Analog/Benchmark

SEEM Disaggregation	SEEM Analog/Benchmark
• Not Applicable	Not Applicable

DA-2: Speed to Answer Performance/Percent Answered within "X" Seconds – Directory Assistance (DA)

Definition

Measurement of the percent of DA calls that are answered in less than twelve seconds.

Exclusions

None

Business Rules

The clock starts when the customer enters the queue and the clock stops when a BellSouth representative answers the call or the customer abandons the call. The length of each call is determined by measuring, using a scanning technique, and accumulating the elapsed time from the entry of a customer call into the BellSouth call management system queue until the customer call is abandoned or transferred to BellSouth personnel assigned to handle calls for assistance. The system makes no distinction between CLEC customers and BellSouth customers.

Calculation

The Percent Answered within "X" Seconds measurement for DA is derived by using the BellCore Statistical Answer Conversion Tables, to convert the Average Speed to Answer measure into a percent of calls answered within "X" seconds. The BellCore Conversion Tables are specific to the defined parameters of work time, number of operators, max queue size and call abandonment rates.

Report Structure

- Reported for the aggregate of BellSouth and CLECs
  - State

Data Retained (on Aggregate Basis)

- For the items below, BellSouth's Performance Measurement Analysis Platform (PMAP) receives a final computation; therefore, no raw data file is available in PMAP.
- Month
- Call Type (DA)
- Average Speed of Answer

SQM Disaggregation - Analog/Benchmark

SQM Level of Disaggregation	SQM Analog/Benchmark
None	Parity by Design

SEEM Measure

SEEM	Tier I	Tier II
No		

SEEM Disaggregation - Analog/Benchmark

SEEM Disaggregation	SEEM Analog/Benchmark
• Not Applicable	Not Applicable

Section 7: Database Update Information

D-1: Average Database Update Interval

Definition

This report measures the interval from receipt of the database change request to the completion of the update to the database for Line Information Database (LIDB), Directory Assistance and Directory Listings.

Exclusions

- Updates Canceled by the CLEC
- Initial update when supplemented by CLEC
- BellSouth updates associated with internal or administrative use of local services.

Business Rules

The interval for this measure begins with the date and time stamp when a service order is completed and the completion notice is released to all systems to be updated with the order information including Directory Assistance, Directory Listings, and Line Information Database (LIDB). The end time stamp is the date and time of completion of updates to the system. This metric includes updates from stand-alone directory listing orders.

For BellSouth Results:

The BellSouth computation is identical to that for the CLEC with the clarifications noted below.

Other Clarifications and Qualification:

- For LIDB, the elapsed time for a BellSouth update is measured from the point in time when the BellSouth file maintenance process makes the LIDB update information available until the date and time reported by BellSouth that database updates are completed.
- Results for the CLECs are captured and reported at the update level by Reporting Dimension (see below).
- The Completion Date is the date upon which BellSouth issues the Update Completion Notice to the CLEC.
- If the CLEC initiates a supplement to the originally submitted update and the supplement reflects changes in customer requirements (rather than responding to BellSouth initiated changes), then the update submission date and time will be the date and time of BellSouth receipt of a syntactically correct update supplement. Update activities responding to BellSouth initiated changes will not result in changes to the update submission date and time used for the purposes of computing the update completion interval.
- Elapsed time is measured in hours and hundredths of hours rounded to the nearest tenth of an hour.
- Because this should be a highly automated process, the accumulation of elapsed time continues through off-schedule, weekends and holidays; however, scheduled maintenance windows are excluded.

Calculation

Update Interval = (a - b)

- a = Completion Date and Time of Database Update
- b = Submission Date and Time of Database Change

Average Update Interval = (c / d)

- c = Sum of all Update Intervals
- d = Total Number of Updates Completed During Reporting Period

Report Structure

- CLEC Specific (Under development)
- CLEC Aggregate
- BellSouth Aggregate
- Geographic Scope
  - Region

Data Retained

Relating to CLEC Experience

- Database File Submission Time
- Database File Update Completion Time
- CLEC Number of Submissions
- Total Number of Updates

Relating to BellSouth Performance

- Database File Submission Time
- Database File Update Completion Time
- BellSouth Number of Submissions
- Total Number of Updates

SQM Disaggregation - Analog/Benchmark

SQM Level of Disaggregation	SQM Analog/Benchmark
• Database Type	Parity by Design
• LIDB	
• Directory Listings	
• Directory Assistance	

SEEM Measure

SEEM	Tier I	Tier II
No		

SEEM Disaggregation - Analog/Benchmark

SEEM Disaggregation	SEEM Analog/Benchmark
• Not Applicable	Not Applicable

D-2: Percent Database Update Accuracy

Definition

This report measures the accuracy of database updates by BellSouth for Line Information Database (LIDB) Directory Assistance and Directory Listings using a statistically valid sample of completed CLEC Service Orders in a manual review. This manual review is not conducted on BellSouth Service Orders.

Exclusions

- Updates canceled by the CLEC
- Initial update when supplemented by CLEC
- CLEC orders that had CLEC errors
- BellSouth updates associated with internal or administrative use of local services.

Business Rules

For each update reviewed during the reporting period, the original update that the CLEC sent to BellSouth is compared to the database following completion of the update by BellSouth. An update is "completed without error" if the database completely and accurately reflects the activity specified on the original and supplemental update (e.g., orders) submitted by the CLEC. Each database (e.g., LIDB, Directory Assistance and Directory Listings) should be separately tracked and reported.

A statistically valid sample of completed CLEC Service Orders is pulled each month. This metric includes updates from stand-alone directory listing orders.

Calculation

Percent Update Accuracy = (a / b) X 100

- a = Number of Updates Completed Without Error
- b = Number Updates Completed

Report Structure

- CLEC Aggregate
- CLEC Specific (not available in this report)
- BellSouth Aggregate (not available in this report)
- Geographic Scope
  - Region

Data Retained

Relating to CLEC Experience

- Report Month
- CLEC Order Number (so_nbr) and PON (PON)
- Local Service Request (LSR)
- Order Submission Date
- Number of Orders Reviewed

Note: Code in parentheses is the corresponding header found in the raw data file.

Relating to BellSouth Performance

- Not Applicable

SQM Disaggregation - Analog/Benchmark

SQM Level of Disaggregation	SQM Analog/Benchmark
• Database Type - LIDB - Directory Listings - Directory Assistance	95% Accurate

SEEM Measure

SEEM	Tier I	Tier II
No		

SEEM Disaggregation - Analog/Benchmark

SEEM Disaggregation	SEEM Analog/Benchmark
• Not Applicable	Not Applicable

D-3: Percent NXXs and LRNs Loaded by the LERG Effective Date

Definition

Measurement of the percent of NXX(s) and Location Routing Numbers LRN(s) loaded and tested in new end office and/or tandem switches by the Local Exchange Routing Guide (LERG) effective date when facilities are in place. BellSouth has a single provisioning process for both NXX(s) and LRN(s). In this measure BellSouth will identify whether or not a particular NXX has been flagged as LNP capable (set triggers for dips) by the LERG effective date.

Exclusions

- Activation requests where the CLEC's interconnection arrangements and facilities are not in place by the LERG effective date.
- Expedite requests

Business Rules

Data for the initial NXX(s) and LRN(s) in a local calling area will be based on the LERG effective date or completion of the initial interconnection trunk group(s), whichever is longer. Data for additional NXX(s) in the local calling area will be based on the LERG effective date. The LERG effective date is loaded into the system at the request of the CLEC. It is contingent upon the CLEC to engineer, order, and install interconnection arrangements and facilities prior to that date.

The total Count of NXX(s) and LRN(s) that were scheduled to be loaded and those that were loaded by the LERG effective date in BellSouth switches will be captured in the Work Force Administration - Dispatch In database.

An LRN is assigned by the owner of the switch and is placed into the software translations for every switch to be used as an administrative pointer to route NXX(s) in LNP capable switches. The LRN is a result of Local Number Porting and is housed in a national database provided by the Number Portability Administration Center (NPAC). The switch owner is responsible for notifying NPAC and requesting the effective date that will be reflected in the LERG. The national database downloads routing tables into BellSouth's Service Control Point (SCP) regional databases, which are queried by switches when routing ported numbers.

The basic NXX routing process includes the addition of all NXX(s) in the response translations. This addition to response translations is what supports LRN routing. Routing instructions for all NXX(s), including LRN(s), are received from the Advance Routing & Trunking System (ARTS) and all routing, including response, is established based on the information contained in the Translation Work Instructions (TWINs) document.

Calculation

Percent NXXs/LRNs Loaded and Tested Prior to the LERG Effective Date = (a / b) X 100

- a = Count of NXXs and LRNs loaded by the LERG effective date
- b = Total NXXs and LRNs to be scheduled and loaded by the LERG effective date

Report Structure

- CLEC Specific
- CLEC Aggregate
- BellSouth (Not Applicable)
- Geographic Scope
  - Region

Data Retained

Relating to CLEC Experience

- Company Name
- Company Code
- NPA/NXX
- LERG Effective Date
- Loaded Date

Relating to BellSouth Performance

- Not Applicable

SQM Disaggregation - Analog/Benchmark

SQM Level of Disaggregation	SQM Analog/Benchmark
• Geographic Scope - Region	100% by LERG Effective Date

SEEM Measure

SEEM	Tier I	Tier II
No		

SEEM Disaggregation - Analog/Benchmark

SEEM Disaggregation	SEEM Analog/Benchmark
• Not Applicable	Not Applicable

Section 8: E911

E-1: Timeliness

Definition

Measures the percent of batch orders for E911 database updates (to CLEC resale and BellSouth retail records) processed successfully within a 24-hour period.

Exclusions

- Any resale order canceled by a CLEC
- Facilities-based CLEC orders

Business Rules

The 24-hour processing period is calculated based on the date and time processing starts on the batch orders and the date and time processing stops on the batch orders. Mechanical processing starts when SCC (the BellSouth E911 vendor) receives E911 files containing batch orders extracted from the BellSouth Service Order Control System (SOCS). Processing stops when SCC loads the individual records to the E911 database. The E911 database includes updates to the Automatic Location Identification (ALI) database. The system makes no distinction between CLEC resale records and BellSouth retail records.

Calculation

E911 Timeliness = (a / b) X 100

- a = Number of batch orders processed within 24 hours
- b = Total number of batch orders submitted

Report Structure

Reported for the aggregate of CLEC resale updates and BellSouth retail updates

- State
- Region

Data Retained

- Report Month
- Aggregate Data

SQM Disaggregation - Analog/Benchmark

SQM Level of Disaggregation	SQM Analog/Benchmark
None	Parity by Design

SEEM Measure

SEEM	Tier I	Tier II
No		

SEEM Disaggregation - Analog/Benchmark

SEEM Disaggregation	SEEM Analog/Benchmark
• Not Applicable	Not Applicable

E-2: Accuracy

Definition

Measures the percent of E911 telephone number (TN) record updates (to CLEC resale and BellSouth retail records) processed successfully for E911 (including the Automatic Location Identification (ALI) database).

Exclusions

- Any resale order canceled by a CLEC
- Facilities-based CLEC orders

Business Rules

Accuracy is based on the number of records processed without error at the conclusion of the processing cycle. Mechanical processing starts when SCC (the BellSouth E911 vendor) receives E911 files containing telephone number (TN) records extracted from BellSouth's Service Order Control System (SOCS). The system makes no distinction between CLEC resale records and BellSouth retail records.

Calculation

E911 Accuracy = (a / b) X 100

- a = Number of record individual updates processed with no errors
- b = Total number of individual record updates

Report Structure

Reported for the aggregate of CLEC resale updates and BellSouth retail updates

- State
- Region

Data Retained

- Report Month
- Aggregate Data

SQM Disaggregation - Analog/Benchmark

SQM Level of Disaggregation	SQM Analog/Benchmark
• None	Parity by Design

SEEM Measure

SEEM	Tier I	Tier II
No		

SEEM Disaggregation - Analog/Benchmark

SEEM Disaggregation	SEEM Analog/Benchmark
• Not Applicable	Not Applicable

E-3: Mean Interval

Definition

Measures the mean interval processing of E911 batch orders (to update CLEC resale and BellSouth retail records) including processing against the Automatic Location Identification (ALI) database.

Exclusions

- Any resale order canceled by a CLEC
- Facilities-based CLEC orders

Business Rules

The processing period is calculated based on the date and time processing starts on the batch orders and the date and time processing stops on the batch orders. Data is posted is 4-hour increments up to and beyond 24 hours. The system makes no distinction between CLEC resale records and BellSouth retail records.

Calculation

E911 Interval = (a - b)

- a = Date and time of batch order completion
- b = Date and time of batch order submission

E911 Mean Interval = (c / d)

- c = Sum of all E911 Intervals
- d = Number of batch orders completed

Report Structure

Reported for the aggregate of CLEC resale updates and BellSouth retail updates

- State
- Region

Data Retained

- Report Month
- Aggregate Data

SQM Disaggregation - Analog/Benchmark

SQM Level of Disaggregation	SQM Analog/Benchmark
None	Parity by Design

SEEM Measure

SEEM	Tier I	Tier II
No		

SEEM Disaggregation - Analog/Benchmark

SEEM Disaggregation	SEEM Analog/Benchmark
• Not Applicable	Not Applicable

Section 9: Trunk Group Performance

TGP-1: Trunk Group Performance-Aggregate

Definition

The Trunk Group Performance report displays, over a reporting cycle, aggregate, average trunk group blocking data for each hour of each day of the reporting cycle, for both CLEC affecting and BellSouth affecting trunk groups.

Exclusions

- Trunk Groups blocked due to unanticipated significant increase in CLEC traffic
- Orders that are delayed or refused by CLEC
- Trunk Groups for which there was no valid data available for an entire study period
- Duplicate trunk group information
- Trunk Groups blocked due to CLEC network/equipment failure
- Final Groups actually overflowing, not blocked

Business Rules

The purpose of the Trunk Group Performance Report is to provide trunk blocking measurements on CLEC and BellSouth trunk groups for comparison only. It is not the intent of the report that it be used for network management and/or engineering. BellSouth should notify the CLEC when such blocking meets this exclusion criteria (orders that are delayed or refused by the CLEC) and report the results, both with and without the exclusions. An unanticipated significant increase in traffic is indicated by a 20% increase for small trunk groups or 1800 CCS for large groups over the previous months traffic when the increase was not forecasted by the CLEC.

Monthly Average Blocking:

- The reporting cycle includes both business and non-business days in a calendar month.
- Monthly average blocking values are calculated for each trunk group for each of the 24 time consistent hours across a reporting cycle.

Aggregate Monthly Blocking:

- Used to compare aggregate blocking across trunk groups which terminate traffic at CLEC points of presence versus BellSouth switches.
- Aggregate monthly blocking data is calculated for each hour of the day across all trunk groups assigned to a category.

Trunk Categorization:

- This report displays, over a reporting cycle, aggregate, average blocking data for each hour of a day. Therefore, for each reporting cycle, 24 blocking data points are generated for two aggregate groups of selected trunk groups. These groups are CLEC affecting and BellSouth affecting trunk groups. In order to assign trunk groups to each aggregate group, all trunk groups are first assigned to a category. A trunk group's end points and the type of traffic that is transmitted on it define a category. Selected categories of trunk groups are assigned to the aggregate groups so that trunk reports can be generated. The categories to which trunk groups have been assigned for this report are as follows.

CLEC Affecting Categories:

	Point A	Point B
Category 1:	BellSouth End Office	BellSouth Access Tandem
Category 3:	BellSouth End Office	CLEC Switch
Category 4:	BellSouth Local Tandem	CLEC Switch
Category 5:	BellSouth Access Tandem	CLEC Switch

Category 10:..... BellSouth End Office ..... BellSouth Local Tandem

Category 16:..... BellSouth Tandem..... BellSouth Tandem

BellSouth Affecting Categories:

	Point A	Point B
Category 1:	BellSouth End Office	BellSouth Access Tandem
Category 9:	BellSouth End Office	BellSouth End Office
Category 10:	BellSouth End Office	BellSouth Local Tandem
Category 16:	BellSouth Tandem	BellSouth Tandem

Calculation

Monthly Average Blocking:

- For each hour of the day, each day's raw data are summed across all valid measurements days in a report cycle for blocked and attempted calls.
- The sum of the blocked calls is divided by the total number of calls attempted in a reporting period.

Aggregate Monthly Blocking:

- For each hour of the day, the monthly sums of the blocked and attempted calls from each trunk group are separately aggregated over all trunk groups within each assigned category.
- The total blocked calls is divided by the total call attempts within a group to calculate an aggregate monthly blocking for each assigned group.
- The result is an aggregate monthly average blocking value for each of the 24 hours by group.
- The difference between the CLEC and BellSouth affecting trunk groups are also calculated for each hour.

Report Structure

- CLEC Aggregate
- BellSouth Aggregate
  - State
- With and Without Exclusion for Orders Delayed or Refused by CLEC

Data Retained

Relating to CLEC Experience

- Report Month
- Total Trunk Groups
- Number of Trunk Groups by CLEC
- Hourly Blocking Per Trunk Group
- Hourly Usage Per Trunk Group
- Hourly Call Attempts Per Trunk Group

Related to BellSouth Performance

- Report Month
- Total Trunk Groups
- Aggregate Hourly Blocking Per Trunk Group
- Hourly Usage Per Trunk Group
- Hourly Call Attempts Per Trunk Group

SQM Disaggregation - Analog/Benchmark

SQM Level of Disaggregation	SQM Analog/Benchmark
• CLEC Aggregate	Any consecutive 2 hour period in 24 hours where CLEC blockage exceeds BellSouth blockage by more than 0.5% using trunk groups 1, 3, 4, 5, 10, 16 for CLECs and 9 for BellSouth
• BellSouth Aggregate	

SEEM Measure

SEEM	Tier I	Tier II
Yes		X

SEEM Disaggregation - Analog/Benchmark

SEEM Disaggregation	SEEM Analog/Benchmark
• CLEC Aggregate	Any consecutive 2 hour period in 24 hours where CLEC blockage exceeds BellSouth blockage by more than 0.5% using trunk groups 1,3,4,5,10,16 for CLECs and 9 for BellSouth
• BellSouth Aggregate	

TGP-2: Trunk Group Performance – CLEC Specific

Definition

The Trunk Group Performance report displays, over a reporting cycle, CLEC specific, average trunk group blocking data for each hour of each day of the reporting cycle, for both CLEC affecting and BellSouth affecting trunk groups.

Exclusions

- Trunk Groups blocked due to unanticipated significant increase in CLEC traffic
- Orders that are delayed or refused by CLEC
- Trunk Groups for which there was no valid data available for an entire study period
- Duplicate trunk group information
- Trunk Groups blocked due to CLEC network/equipment failure
- Final Groups actually overflowing not blocked

Business Rules

The purpose of the Trunk Group Performance Report is to provide trunk blocking measurements on CLEC and BellSouth trunk groups for comparison only. It is not the intent of the report that it be used for network management and/or engineering. BellSouth should notify the CLEC when such blocking meets this exclusion criteria (orders that are delayed or refused by the CLEC) and report the results, both with and without the exclusions. An unanticipated significant increase in traffic is indicated by a 20% increase for small trunk groups or 1800 CCS for large groups over the previous months traffic when the increase was not forecasted by the CLEC.

Monthly Average Blocking:

- The reporting cycle includes both business and non-business days in a calendar month.
- Monthly average blocking values are calculated for each trunk group for each of the 24 time consistent hours across a reporting cycle.

Aggregate Monthly Blocking:

- Used to compare aggregate blocking across trunk groups which terminate traffic at CLEC points of presence versus BellSouth switches.
- Aggregate monthly blocking data is calculated for each hour of the day across all trunk groups assigned to a category.

Trunk Categorization:

- This report displays, over a reporting cycle, aggregate, average blocking data for each hour of a day. Therefore, for each reporting cycle, 24 blocking data points are generated for two aggregate groups of selected trunk groups. These groups are CLEC affecting and BellSouth affecting trunk groups. In order to assign trunk groups to each aggregate group, all trunk groups are first assigned to a category. A trunk group's end points and the type of traffic that is transmitted on it define a category. Selected categories of trunk groups are assigned to the aggregate groups so that trunk reports can be generated. The categories to which trunk groups have been assigned for this report are as follows.

CLEC Affecting Categories:

	Point A	Point B
Category 1:	BellSouth End Office	BellSouth Access Tandem
Category 3:	BellSouth End Office	CLEC Switch
Category 4:	BellSouth Local Tandem	CLEC Switch
Category 5:	BellSouth Access Tandem	CLEC Switch
Category 10:	BellSouth End Office	BellSouth Local Tandem

Category 16:..... BellSouth Tandem..... BellSouth Tandem

BellSouth Affecting Categories:

	Point A	Point B
Category 1:	BellSouth End Office	BellSouth Access Tandem
Category 9:	BellSouth End Office	BellSouth End Office
Category 10:	BellSouth End Office	BellSouth Local Tandem
Category 16:	BellSouth Tandem	BellSouth Tandem

Calculation

Monthly Average Blocking:

- For each hour of the day, each day's raw data are summed across all valid measurements days in a report cycle for blocked and attempted calls.
- The sum of the blocked calls is divided by the total number of calls attempted in a reporting period.

Aggregate Monthly Blocking:

- For each hour of the day, the monthly sums of the blocked and attempted calls from each trunk group are separately aggregated over all trunk groups within each assigned category.
- The total blocked calls is divided by the total call attempts within a group to calculate an aggregate monthly blocking for each assigned group.
- The result is an aggregate monthly average blocking value for each of the 24 hours by group.
- The difference between the CLEC and BellSouth affecting trunk groups are also calculated for each hour.

Report Structure

- CLEC Specific
  - State
- With and Without Exclusion for Orders Delayed or Refused by CLEC

Data Retained

Relating to CLEC Experience

- Report Month
- Total Trunk Groups
- Number of Trunk Groups by CLEC
- Hourly Blocking Per Trunk Group
- Hourly Usage Per Trunk Group
- Hourly Call Attempts Per Trunk Group

Relating to BellSouth Performance

- Report Month
- Total Trunk Groups
- Aggregate Hourly Blocking Per Trunk Group
- Hourly Usage Per Trunk Group
- Hourly Call Attempts Per Trunk Group

SQM Disaggregation - Analog/Benchmark

SQM Level of Disaggregation	SQM Analog/Benchmark
• CLEC Trunk Group	Any 2 consecutive hour period in 24 hours where CLEC blockage exceeds BellSouth blockage by more than 0.5% using trunk groups 1, 3, 4, 5, 10, 16 for CLECs and 9 for BellSouth

SEEM Measure

SEEM	Tier I	Tier II
Yes	X	

SEEM Disaggregation - Analog/Benchmark

SEEM Disaggregation	SEEM Analog/Benchmark
• CLEC Trunk Group	Any 2 consecutive hour period in 24 hours where CLEC blockage exceeds BellSouth blockage by more than 0.5% using trunk groups 1, 3, 4, 5, 10, 16 for CLECs and 9 for BellSouth
• BellSouth Trunk Group	

Section 10: Collocation

C-1: Collocation Average Response Time

Definition

Measures the average time (counted in calendar days) from the receipt of a complete and accurate collocation application (including receipt of application fee if required) to the date BellSouth returns a response electronically or in writing. Within the number of calendar days as designated by the Collocation order after having received a bona fide application for physical collocation, BellSouth must respond with space availability and a price quote.

Exclusions

Any application canceled by the CLEC

Business Rules

The clock starts on the date that BellSouth receives a complete and accurate collocation application accompanied by the appropriate application fee if required. The clock stops on the date that BellSouth returns a response. The clock will restart upon receipt of changes to the original application request.

Calculation

Response Time = (a - b)

- a = Request Response Date
- b = Request Submission Date

Average Response Time = (c / d)

- c = Sum of all Response Times
- d = Count of Responses Returned within Reporting Period

Report Structure

- Individual CLEC (alias) aggregate
- Aggregate of all CLECs
- Geographic Scope
  - State

Data Retained

- Report period
- Aggregate data

SQM Disaggregation - Analog/Benchmark

SQM Level of Disaggregation	SQM Analog/Benchmark
State	Virtual - 15 Calendar Days
Virtual-Initial	Physical Caged - 15 Calendar Days
Virtual-Augment	Physical Cageless - 15 Calendar Days
Physical Caged-Initial	
Physical Caged-Augment	
Physical-Cageless-Initial	
Physical Cageless-Augment	

SEEM Measure

SEEM	Tier I	Tier II
No		

SEEM Disaggregation - Analog/Benchmark

SEEM Disaggregation	SEEM Analog/Benchmark
• Not Applicable	Not Applicable

C-2: Collocation Average Arrangement Time

Definition

Measures the average time (counted in calendar days) from receipt of a complete and accurate Bona Fide firm order (including receipt of appropriate fee if required) to the date BellSouth completes the collocation arrangement and notifies the CLEC.

Exclusions

Any Bona Fide firm order canceled by the CLEC

Business Rules

The clock starts on the date that BellSouth receives a complete and accurate Bone Fide firm order accompanied by the appropriate fee. The clock stops on the date that BellSouth completes the collocation arrangement and notifies the CLEC. The cable assignments associated with the specific collocation request will be provided prior to completion of the arrangement.

Calculation

Arrangement Time = (a - b)

- a = Date Collocation Arrangement is Complete
- b = Date Order for Collocation Arrangement Submitted

Average Arrangement Time = (c / d)

- c = Sum of all Arrangement Times
- d = Total Number of Collocation Arrangements Completed during Reporting Period

Report Structure

- Individual CLEC (alias) Aggregate
- Aggregate of all CLECs
- Geographic Scope
  - State

Data Retained

- Report Period
- Aggregate Data

SQM Disaggregation - Analog/Benchmark

SQM Level of Disaggregation	SQM Analog/Benchmark
• State	Virtual - 60 Calendar Days
• Virtual-Initial	Virtual-Augment - 60 Calendar Days (Without Space Increase)
• Virtual-Augment	Virtual-Augment - 60 Calendar Days (With Space Increase)
• Physical Caged-Initial	Physical Caged - 90 Calendar Days (Ordinary)
• Physical Caged-Augment	Physical Caged-Augment - 45 Calendar Days (Without Space Increase)
• Physical Cageless-Initial	Physical Caged-Augment - 90 Calendar Days (With Space Increase)
• Physical Cageless-Augment	Physical Cageless - 90 Calendar Days Physical Cagedless-Augment - 45 Calendar Days (Without

Space Increase)
Physical Cagedless-Augment - 90 Calendar Days (With Space Increase)

SEEM Measure

SEEM	Tier I	Tier II
No		

SEEM Disaggregation - Analog/Benchmark

SEEM Disaggregation	SEEM Analog/Benchmark
• Not Applicable	Not Applicable

C-3: Collocation Percent of Due Dates Missed

Definition

Measures the percent of missed due dates for both virtual and physical collocation arrangements

Exclusions

Any Bona Fide firm order canceled by the CLEC

Business Rules

Percent Due Dates Missed is the percent of total collocation arrangements which BellSouth is unable to complete by end of the BellSouth committed due date. The arrangement is considered a missed due date if it is not completed on or before the committed due date.

Calculation

% of Due Dates Missed = (a / b) X 100

- a = Number of Completed Orders that were not completed by BellSouth Committed Due Date during Reporting Period
- b = Number of Orders Completed in Reporting Period

Report Structure

- Individual CLEC (alias) aggregate
- Aggregate of all CLECs
- Geographic Scope
  - State

Data Retained

- Report Period
- Aggregate Data

SQM Disaggregation - Analog/Benchmark

SQM Level of Disaggregation	SQM Analog/Benchmark
State	>= 95% on time
Virtual-Initial	
Virtual- Augment	
Physical Caged- Initial	
Physical Caged- Augment	
Physical Cageless- Initial	
Physical Cageless- Augment	

SEEM Measure

SEEM	Tier I	Tier II
Yes	X	X

SEEM Disaggregation - Analog/Benchmark

SEEM Disaggregation	SEEM Analog/Benchmark
• All Collocation Arrangements	>= 95% on time

Section 11: Change Management

CM-1: Timeliness of Change Management Notices

Definition

Measures whether CLECs receive required software release notices on time to prepare for BellSouth interface/system changes so CLEC interfaces are not impaired by change.

Exclusions

- Changes to release dates for reasons outside BellSouth control, such as the system software vendor changes. For example: a patch to fix a software problem.
- Type 6 Change Requests (Defects/Expedites), as defined by the Change Control Process (CCP)

Business Rules

This metric is designed to measure the percent of change management notices sent to the CLECs according to notification standards and time frames set forth in the Change Control Process. The CCP is used by BellSouth and the CLECs to manage requested changes to the BellSouth Local Interfaces.

The clock starts on the notification date. The clock stops on the software release date. When project events occur (scope changes, analysis information, etc.), the software release date may change. A revised notification would be required and the clock would restart. Based on release constraints for defects/expedites, notification may be less than the agreed upon interval in the CCP for new features.

Calculation

Timeliness of Change Management Notices = (a / b) X 100

- a = Total number of Change Management Notifications Sent Within Required Time frames
- b = Total Number of Change Management Notifications Sent

Report Structure

- BellSouth Aggregate
- Geographic Scope
  - Region

Data Retained

- Report Period
- Notice Date
- Release Date

SQM Disaggregation - Analog/Benchmark

SQM Level of Disaggregation	SQM Analog/Benchmark
• Region	98% on time

SEEM Measure

SEEM	Tier I	Tier II
Yes		X

SEEM Disaggregation - Analog/Benchmark

SEEM Disaggregation	SEEM Analog/Benchmark
• Region	98% on time

CM-2: Change Management Notice Average Delay Days

Definition

Measures the average delay days for change management system release notices sent outside the time frame set forth in the Change Control Process.

Exclusions

- Changes to release dates for reasons outside BellSouth control, such as the system vendor
- Type 6 Change Requests (Defects/Expedites), as defined by the Change Control Process

Business Rules

This metric is designed to compute the average delay days for change management notices sent to the CLECs outside the time frames set forth in the Change Control Process. The CCP is used by BellSouth and the CLECs to manage requested changes to the BellSouth Local Interfaces.

The clock starts on the notification due date. The clock stops on the software release date. When project events occur (scope changes, analysis information, etc.), the software release date may change. A revised notification would be required and the clock would restart. Based on release constraints for defects/expedites, notification may be less than the agreed upon interval in the CCP for new features

Calculation

Change Management Notice Delay Days = (a - b)

- a = Date Notice Sent
- b = Date Notice Due

Change Management Notice Average Delay Days = (c / d)

- c = Sum of all Change Management Notice Delay Days
- d = Total Number of Notices Sent Late

Report Structure

- BellSouth Aggregate
- Geographic Scope
  - Region

Data Retained

- Report Period
- Notice Date
- Release Date

SQM Disaggregation - Analog/Benchmark

SQM Level of Disaggregation	SQM Analog/Benchmark
Region	<= 5 Days

SEEM Measure

SEEM	Tier I	Tier II
No		

SEEM Disaggregation - Analog/Benchmark

SEEM Disaggregation	SEEM Analog/Benchmark
• Not Applicable	Not Applicable

CM-3: Timeliness of Documents Associated with Change

Definition

Measures whether CLECs received requirements or business rule documentation on time to prepare for BellSouth interface/system changes so CLEC interfaces are not impaired by change.

Exclusions

- Documentation for release dates that slip less than 30 days for a change mandated by regulatory or legal entities (Federal Communications Commission [FCC], a state commission/authority, or state and federal courts) or CLEC request.
- Type 6 Change Requests (Defects/Expedites), as defined by the Change Control Process.

Business Rules

This metric is designed to measure the percent of requirements or business rule documentation sent to the CLECs according to documentation standards and time frames set forth in the Change Control Process, a copy of which can be found at http://www.interconnection.bellsouth.com/markets/lec/ccp_live/index.html. The CCP is used by BellSouth and the CLECs to manage requested changes to the BellSouth Local Interfaces.

The clock starts on the business rule documentation release date. The clock stops on the software release date. When project events occur (scope changes, analysis information, etc.), the software release date may change. Revisions to documentation could be required and the clock would restart.

Calculation

Timeliness of Documents Associated with Change = (a / b) X 100

- a = Change Management Documentation Sent Within Required Time frames after Notices
- b = Total Number of Change Management Documentation Sent

Report Structure

- BellSouth Aggregate
- Geographic Scope
  - Region

Data Retained

- Report Period
- Notice Date
- Release Date

SQM Disaggregation - Analog/Benchmark

SQM Level of Disaggregation	SQM Analog/Benchmark
• Region	98% on Time

SEEM Measure

SEEM	Tier I	Tier II
Yes		X

SEEM Disaggregation - Analog/Benchmark

SEEM Disaggregation	SEEM Analog/Benchmark
• Region	98% on Time

CM-4: Change Management Documentation Average Delay Days

Definition

Measures the average delay days for requirements or business rule documentation sent outside the time frames set forth in the Change Control Process.

Exclusions

- Documentation for release dates that slip less than 30 days for reasons outside BellSouth control, such as changes due to Regulatory mandate or CLEC request.
- Type 6 Change Requests (Defects/Expedites), as defined by the Change Control Process.

Business Rules

This metric is designed to compute the average delay days for business rule documentation sent to the CLECs outside the time frames set forth in the Change Control Process. The CCP is used by BellSouth and the CLECs to manage requested changes to the BellSouth Local Interfaces.

The clock starts on the business rule documentation release date. The clock stops on the software release date. When project events occur (scope changes, analysis information, etc.), the software release date may change. Revisions to documentation could be required and the clock would restart.

Calculation

Change Management Documentation Delay Days = (a - b)

- a = Date Documentation Provided
- b = Date Documentation Due

Change Management Documentation Average Delay Days = (c / d)

- c = Sum of all CM Documentation Delay Days
- d = Total Change Management Documents Sent

Report Structure

- BellSouth Aggregate
- Geographic Scope
  - Region

Data Retained

- Report Period
- Notice Date
- Release Date

SQM Disaggregation - Analog/Benchmark

SQM Level of Disaggregation	SQM Analog/Benchmark
• Region	<= 5 Days

SEEM Measure

SEEM	Tier I	Tier II
No		

SEEM Disaggregation - Analog/Benchmark

SEEM Disaggregation	SEEM Analog/Benchmark
• Not Applicable	Not Applicable

CM-5: Notification of CLEC Interface Outages

Definition

Measures the time it takes BellSouth to notify the CLEC of an outage of an interface.

Exclusions

None

Business Rules

This metric measures the process of notifying CLECs of an interface outage as defined by the Change Control Process Documentation. BellSouth has 15 minutes to notify the CLECs via email, once the Help Desk has verified the existence of an outage. An outage is verified to exist when on or more of the following conditions occur:

1. BellSouth can duplicate a CLEC reported error.
2. BellSouth finds an error message within the system error log that identifiably matches a CLEC reported outage.
3. When 3 or more CLECs report the identical type of outage.
4. BellSouth detects a problem due to the loss of functionality for users of a system.

Note: The 15 minute clock begins once a CLEC reported or a BellSouth detected outage has lasted for 20 minutes and has been verified. If the outage is not verified within 20 minutes, the clock begins at the point of verification.

This metric will be expressed as a percentage.

Calculation

Notification of CLEC Interface Outages = (a / b) X 100

- a = Number of Interface Outages where CLECs are notified within 15 minutes
- b = Total Number of Interface Outages

Report Structure

- CLEC Aggregate
- Geographic Scope
  - Region

Data Retained

Relating to CLEC Experience

- Number of Interface Outages
- Number of Notifications <= 15 minutes

Relating to BellSouth Performance

- Not Applicable

SQM Disaggregation - Analog/Benchmark

SQM Level of Disaggregation	SQM Analog/Benchmark
• By interface type for all interfaces accessed by CLECs	97% <= 15 Minutes

Interface	Applicable to
EDI	CLEC
CSOTS	CLEC
LENS	CLEC
TAG	CLEC
ECTA	CLEC
TAFI	CLEC/BellSouth

SEEM Measure

SEEM	Tier I	Tier II
No		

SEEM Disaggregation - Analog/Benchmark

SEEM Disaggregation	SEEM Analog/Benchmark
• Not Applicable	Not Applicable

CM-6: Percent of Software Errors Corrected in "X" (10, 30, 45) Business Days

Definition

Measures the percent of all outstanding Software Errors due and overdue to be corrected by BellSouth in "X" (10, 30, 45) business days within the monthly report period.

Exclusions

- Software Corrections having implementation intervals that are longer than those defined in this measure and agreed upon by the CLECs
- Rejected or reclassified software errors (BellSouth must report the number of rejected or reclassified software errors disputed by the CLECs)

Business Rules

This metric is designed to measure BellSouth's performance each month in correcting identified Software Errors within the specified interval. The clock starts when a Software Error validated per the Change Control Process, a copy of which can be found at http://www.interconnection.bellsouth.com/markets/lec/ccp_live/index.html, and stops when the error is corrected and notice posted to the Change Control Website. The monthly report should include all defects due and overdue to be corrected within the report period. Software defects are defined as Type 6 Change Requests in the Change Control Process.

Calculation

Percent of Software Errors Corrected in "X" (10, 30, 45) Business Days = (a / b) X 100

- a = Total number of Software Errors Corrected where "X" = 10, 30, or 45 Business Days.
- b = Total number of Software Errors requiring correction where "X" = 10, 30, or 45 Business Days.

Report Structure

- Severity 2 = 10 Business Days
- Severity 3 = 30 Business Days
- Severity 4 = 45 Business Days

Data Retained

- Report Period
- Total Completed
- Total Completed within "X" Business Days
- Disputed, Rejected or Reclassified Software Errors

SQM Level of Disaggregation - Analog/Benchmark

SQM Level of Disaggregation	SQM Analog/Benchmark
• Region	95% within interval

SEEM Measure

SEEM	Tier I	Tier II
Yes		X

SEEM Disaggregation - Analog/Benchmark

SEEM Disaggregation	SEEM Analog/Benchmark
• Region	95% within interval

CM-7: Percent of Change Requests Accepted or Rejected within 10 Days

Definition

Measures the percent of Change Requests other than Type 1 or Type 6 Change Requests, submitted by CLECs that are Accepted or Rejected by BellSouth in 10 business days within the report period.

Exclusions

- Change Requests that are canceled or withdrawn before a response from BellSouth is due.

Business Rules

The Acceptance/Rejection interval starts when the acknowledgement is due to the CLEC per the Change Control Process, a copy of which can be found at http://www.interconnection.bellsouth.com/markets/lec/ccp_live/index.html. The clock ends when BellSouth issues an acceptance or rejection notice to the CLEC. This metric includes all change requests not subject to the above exclusions, not just those received and accepted or rejected in the reporting period.

Calculation

Percent of Change Requests Accepted or Rejected within 10 Business Days = (a / b) X 100

- a = Total number of Change Requests accepted or rejected within 10 business days
- b = Total number of Change Requests submitted in the reporting period

Report Structure

- BellSouth Aggregate

Data Retained

- Report Period
- Requests Accepted or Rejected
- Total Requests

SQM Level of Disaggregation - Analog/Benchmark

SQM Level of Disaggregation	SQM Analog/Benchmark
• Region	95% within interval

SEEM Measure

SEEM	Tier I	Tier II
Yes		X

SEEM Disaggregation - Analog/Benchmark

SEEM Disaggregation	SEEM Analog/Benchmark
• Region	95% within interval

CM-8: Percent Change Requests Rejected

Definition

Measures the percent of Change Requests (other than Type 1 or Type 6 Change Requests) submitted by CLECs that are rejected by reason within the report period.

Exclusions

- Change Requests that are canceled or withdrawn before a response from BellSouth is due.

Business Rules

This metric includes any rejected change requests in the reporting period, regardless of whether received early or late. The metric will be disaggregated by major categories of rejections per the Change Control Process, a copy of which can be found at http://www.interconnection.bellsouth.com/markets/lec/ccp_live/index.html. These reasons are: Cost, Technical Feasibility, and Industry Direction. This metric includes all change requests not subject to the above exclusions, not just those received and accepted or rejected in the same reporting period.

Calculation

Percent Change Requests Rejected = (a / b) X 100

- a = Total number of Change Requests rejected
- b = Total number of Change Requests submitted within the report period

Report Structure

- BellSouth Aggregate
- Cost
- Technical Feasibility

Data Retained

- Report Period
- Requests Rejected
- Total Requests

SQM Level of Disaggregation - Analog/Benchmark

SQM Level of Disaggregation	SQM Analog/Benchmark
Region	Diagnostic
Reason – Cost	
Reason – Technical Feasibility	
Reason – Industry Direction	

SEEM Measure

SEEM	Tier I	Tier II
No		

SEEM Disaggregation - Analog/Benchmark

SEEM Disaggregation	SEEM Analog/Benchmark
• Not Applicable	Not Applicable

CM-9: Number of Defects in Production Releases (Type 6 CR)

Definition

Measures the number of defects in Production Releases. This measure will be presented as the number of Type 6 Severity 1 defects, the number of Type 6 Severity 2 defects without a mechanized work around, and the number of Type 6 Severity 3 defects resulting within a three week period from a Production Release date. The definition of Type 6 Change Requests (CR) and Severity 1, Severity 2, and Severity 3 defects can be found in the Change Control Process Document.

Exclusions

None

Business Rules

This metric measures the number of Type 6 Severity 1 defects, the number of Type 6 Severity 2 defects without a mechanized work around, and the number of Type 6 Severity 3 defects resulting within a three week period from a Production Release date. The definitions of Type 6 Change Requests (CR) and Severity 1, 2, and 3 defects can be found in the Change Control Process, which can be found at http://www.interconnection.bellsouth.com/markets/lec/ccp_live/index.html.

Calculation

The number of Type 6 Severity 1 Defects, the number of Type 6 Severity 2 Defects without a mechanized work around, and the number of Type 6 Severity 3 defects.

Report Structure

- Production Releases
- Number of Type 6 Severity 1 defects
- Number of Type 6 Severity 2 defects without a mechanized work around
- Number of Type 6 Severity 3 defects

Data Retained

- Region
- Report Period
- Production Releases
- Number of Type 6 Severity 1 defects
- Number of Type 6 Severity 2 defects without a mechanized work around
- Number of Type 6 Severity 3 defects

SQM Level of Disaggregation - Analog/Benchmark

SQM Level of Disaggregation	SQM Analog/Benchmark
Region—Number of Type 6 Severity 1 Defects	0 Defects
Region—Number of Type 6 Severity 2 Defects	0 Defects without a mechanized work around
Region—Number of Type 6 Severity 3 Defects	0 Defects

SEEM Measure

SEEM	Tier I	Tier II
No		

SEEM Disaggregation	SEEM Analog/Benchmark
• Not Applicable	Not Applicable

CM-10: Software Validation

Definition

Measures software validation test results for Production Releases of BellSouth Local Interfaces.

Exclusions

None

Business Rules

BellSouth maintains a test deck of transactions that are used to validate that functionality in software Production Releases work as designed. Each transaction in the test deck is assigned a weight factor, which is based on the weights that have been assigned to the metrics. Within the software validation metric weight factors will be allocated among transaction types (e.g., Pre-Order, Order Resale, Order UNE, Order UNE-P) and then equally distributed across transactions within the specific type.

BellSouth will begin to execute the software validation test deck within one (1) business day following a Production Release. Test deck transactions will be executed using Production Release software in the CAVE environment. Within seven (7) business days following completion of the Production Release software validation test in CAVE, BellSouth will report the number of test deck transactions that failed. Each failed transaction will be multiplied by the transaction's weight factor.

A transaction is considered failed if the request cannot be submitted or processed, or results in incorrect or improperly formatted data.

The test deck scenario weight table can be found in the Change Control Process, a copy of which can be found at http://www.interconnection.bellsouth.com/markets/lec/ccp_live/index.html.

Calculation

This software validation metric is defined as the ratio of the sum of the weights of failed transactions using Production Release software in CAVE to the sum of the weights of all transactions in the test deck.

- Numerator = Sum of weights of failed transactions
- Denominator = Sum of weights of all transactions in the test deck

Report Structure

- BellSouth Aggregate

Data Retained

- Report Period
- Production Release Number
- Test Deck Weights
- % Test Deck Weight Failure

SQM Level of Disaggregation - Analog/Benchmark

SQM Level of Disaggregation	SQM Analog/Benchmark
• Region	<= 5%

SEEM Measure

SEEM	Tier I	Tier II
No		

SEEM Disaggregation	SEEM Analog/Benchmark
• Not Applicable	Not Applicable

CM-11: Percent of Change Requests Implemented within 60 Weeks of Prioritization

Definition

Measures whether BellSouth provides CLECs timely implementation of prioritized change requests.

Exclusions

- Change requests that are implemented later than 60 weeks with the consent of the CLECs
- Change requests for which BellSouth has regulatory authority to exceed the interval

Business Rules

This metric is designed to measure BellSouth's monthly performance in implementing prioritized change requests. The clock starts when a change request has first been prioritized as described in the Change Control Process. The clock stops when the change request has been implemented by BellSouth and made available to the CLECs. BellSouth will begin reporting this monthly measure with the next release for diagnostic purposes, and will be measured for SEEM purposes 60 weeks from first prioritization meeting following Commission approval of this measure.

Calculation

Percent of Type 5 CLEC initiated Change Requests implemented on time = (a / b) X 100

- a = Total number of prioritized Type 5 Change Requests implemented each month that are less than or equal to 60 weeks of age from the date of their first prioritization plus all other prioritized change requests existing at the end of the month that are less than or equal to 60 weeks of age from prioritization.

- b = All entries in "a" above plus all Type 5 Change Requests prioritized more than 60 weeks before the end of the monthly reporting period.

Percent of Type 4 BellSouth initiated Change Requests implemented on time = (a / b) X 100

- a = Total number of prioritized Type 4 Change Requests implemented each month that are less than or equal to 60 weeks of age from the date of the release prioritization list plus all other Type 4 prioritized change requests existing at the end of the month that are less than or equal to 60 weeks of age from prioritization.

- b = All entries in "a" above plus all Type 4 Change Requests prioritized more than 60 weeks before the end of the monthly reporting period.

Report Structure

- BellSouth Aggregate
- Type 4 requests implemented
- Type 5 requests implemented
- % implemented within 16, 32, 48, and 60 weeks

Data Retained

- Region
- Report Month
- Total implemented by type
- Total implemented within 60 weeks

SQM Level of Disaggregation - Analog/Benchmark

SQM Level of Disaggregation	SQM Analog/Benchmark
• Region	95% within interval
• Type 4 requests implemented	95% within interval
• Type 5 requests implemented	95% within interval

SEEM Measure

SEEM	Tier I	Tier II	Tier III
Yes		X	

SEEM Disaggregation	SEEM Analog/Benchmark
• Region	95% within interval

Appendix A: Reporting Scope

A-1: Standard Service Groupings

See individual reports in the body of the SQM.

A-2: Standard Service Order Activities

These are the generic BellSouth/CLEC service order activities which are included in the Pre-Ordering, Ordering, and Provisioning sections of this document. It is not meant to indicate specific reporting categories.

Service Order Activity Types

- Service Migrations Without Changes
- Service Migrations With Changes
- Move and Change Activities
- Service Disconnects (Unless noted otherwise)
- New Service Installations

Pre-Ordering Query Types

- Address
- Telephone Number
- Appointment Scheduling
- Customer Service Record
- Feature Availability
- Service Inquiry

Maintenance Query Types

TAFI - TAFI queries the systems below

- CRIS
- March
- Predictor
- LMOS
  - DLR
  - DLETH
  - LMOSupd
- LNP
- NIW
- OSPCM
- SOCS

Report Levels

- CLEC RESH
- CLEC State
- CLEC Region
- Aggregate CLEC State
- Aggregate CLEC Region
- BellSouth State
- BellSouth Region

Appendix B: Glossary of Acronyms and Terms

Symbols used in calculations

Σ
A mathematical symbol representing the sum of a series of values following the symbol.

-
A mathematical operator representing subtraction.

+
A mathematical operator representing addition.

/
A mathematical operator representing division.

<
A mathematical symbol that indicates the metric on the left of the symbol is less than the metric on the right.

<=
A mathematical symbol that indicates the metric on the left of the symbol is less than or equal to the metric on the right.

>
A mathematical symbol that indicates the metric on the left of the symbol is greater than the metric on the right.

>=
A mathematical symbol that indicates the metric on the left of the symbol is greater than or equal to the metric on the right.

( )
Parentheses, used to group mathematical operations which are completed before operations outside the parentheses.

A

ACD
Automatic Call Distributor - A service that provides status monitoring of agents in a call center and routes high volume incoming telephone calls to available agents while collecting management information on both callers and attendants.

Aggregate
Sum total of all items in like category, e.g. CLEC aggregate equals the sum total of all CLECs' data for a given reporting level.

ALEC
Alternative Local Exchange Company = FL CLEC

ADSL
Asymmetrical Digital Subscriber Line

ASR
Access Service Request - A request for access service terminating delivery of carrier traffic into a Local Exchange Carrier's network.

ATLAS

Application for Telephone Number Load Administration System - The BellSouth Operations System used to administer the pool of available telephone numbers and to reserve selected numbers from the pool for use on pending service requests/service orders.

ATLASTN
ATLAS software contract for Telephone Number.

Auto Clarification
The number of LSRs that were electronically rejected from LESOG and electronically returned to the CLEC for correction.

B

BFR:
Bona Fied Request

BILLING
The process and functions by which billing data is collected and by which account information is processed in order to render accurate and timely billing.

BOCRIS
Business Office Customer Record Information System (Front-end to the CRIS database.)

BRI
Basic Rate ISDN

BRC
Business Repair Center – The BellSouth Business Systems trouble receipt center which serves large business and CLEC customers.

BellSouth
BellSouth Telecommunications, Inc.

C

CABS
Carrier Access Billing System

CCC
Coordinated Customer Conversions

CCP
Change Control Process

Centrex
A business telephone service, offered by local exchange carriers, which is similar to a Private Branch Exchange (PBX) but the switching equipment is located in the telephone company Central Office (CO).

CKTID
A unique identifier for elements combined in a service configuration

CLEC
Competitive Local Exchange Carrier

CLP
Competitive Local Provider = NC CLEC

CM
Change Management

CMDS
Centralized Message Distribution System - Telcordia administered national system used to transfer specially formatted messages among companies.

COFFI
Central Office Feature File Interface - Provides information about USOCs and class of service. COFFI is a part of DOE/SONGS. It indicates all services available to a customer.

CRIS
Customer Record Information System - This system is used to retain customer information and render bills for telecommunications service.

CRSACCTS
CRIS software contract for CSR information

CRSG
Complex Resale Support Group

C-SOTS
CLEC Service Order Tracking System

CSR
Customer Service Record

CTTG
Common Transport Trunk Group - Final trunk groups between BellSouth & Independent end offices and the BellSouth access tandems.

D

DA
Directory Assistance

DESIGN
Design Service is defined as any Special or Plain Old Telephone Service Order which requires BellSouth Design Engineering Activities.

DISPOSITION & CAUSE
Types of trouble conditions, e.g. No Trouble Found, Central Office Equipment, Customer Premises Equipment, etc.

DLETH
Display Lengthy Trouble History - A history report that gives all activity on a line record for trouble reports in LMOS.

DLR
Detail Line Record - A report that gives detailed line record information on records maintained in LMOS

DS-0
The worldwide standard speed for one digital voice signal (64000 bps).

DS-1
24 DS-0s (1.544Mb/sec., i.e. carrier systems)

DOE
Direct Order Entry System - An internal BellSouth service order entry system used by BellSouth Service Representatives to input business service orders in BellSouth format.

DSAP
DOE (Direct Order Entry) Support Application - The BellSouth Operations System which assists a Service Representative or similar carrier agent in negotiating service provisioning commitments for non-designed services and Unbundled Network Elements.

DSAPDDI
DSAP software contract for schedule information.

DSL
Digital Subscriber Line

DUI
Database Update Information

E

E911
Provides callers access to the applicable emergency services bureau by dialing a 3-digit universal telephone number.

EDI
Electronic Data Interchange - The computer-to-computer exchange of inter and/or intra-company business documents in a public standard format.

ESSX
BellSouth Centrex Service

F G

Fatal Reject
The number of LSRs that were electronically rejected from LEO, which checks to see of the LSR has all the required fields correctly populated.

Flow-Through
In the context of this document, LSRs submitted electronically via the CLEC mechanized ordering process that flow through to the BellSouth OSS without manual or human intervention.

FOC
Firm Order Confirmation - A notification returned to the CLEC confirming that the LSR has been received and accepted, including the specified commitment date.

FX
Foreign Exchange

H

HAL
“Hands Off” Assignment Logic - Front end access and error resolution logic used in interfacing BellSouth Operations Systems such as ATLAS, BOCRIS, LMOS, PSIMS, RSAG and SOCS.

HALCRIS
HAL software contract for CSR information

HDSL
High Density Subscriber Loop/Line

I J K

ILEC
Incumbent Local Exchange Company

INP
Interim Number Portability

ISDN
Integrated Services Digital Network

IPC
Interconnection Purchasing Center

L

LAN
Local Area Network

LAUTO
The automatic processor in the LNP Gateway that validates LSRs and issues service orders.

LCSC
Local Carrier Service Center - The BellSouth center which is dedicated to handling CLEC LSRs, ASRs, and Preordering transactions along with associated expedite requests and escalations.

Legacy System
Term used to refer to BellSouth Operations Support Systems (see OSS)

LENS
Local Exchange Negotiation System - The BellSouth LAN/web server/OS application developed to provide both preordering and ordering electronic interface functions for CLECs.

LEO
Local Exchange Ordering - A BellSouth system which accepts the output of EDI, applies edit and formatting checks, and reformats the Local Service Requests in BellSouth Service Order format.

LERG
Local Exchange Routing Guide

LESOG
Local Exchange Service Order Generator - A BellSouth system which accepts the service order output of LEO and enters the Service Order into the Service Order Control System using terminal emulation technology.

LFACS
Loop Facilities Assessment and Control System

LIDB
Line Information Database

LMOS
Loop Maintenance Operations System - A system that provides a mechanized means of maintaining customer line records and for entering, processing, and tracking trouble reports.

LMOS HOST

LMOS host computer

LMOSupd
LMOS update allows trouble tickets on line records to be entered into LMOS.

LMU
Loop Make-up

LMUS
Loop Make-up Service Inquiry

LNP
Local Number Portability - In the context of this document, the capability for a subscriber to retain his current telephone number as he transfers to a different local service provider.

LNP Gateway
Local Number Portability (gateway)- A system that provides both internal and external communications with various interfaces and process including:

(1). Linking BellSouth to the Number Portability Administration Center (NPAC).

(2). Allowing for inter-company communications between BellSouth and the CLECs for electronic ordering.

(3). Providing interface between NPAC and AIN SMS for LNP routing processes.

LOOPS
Transmission paths from the central office to the customer premises.

LRN
Location Routing Number

LSR
Local Service Request – A request for local resale service or unbundled network elements from a CLEC.

M

Maintenance & Repair
The process and function by which trouble reports are passed to BellSouth and by which the related service problems are resolved.

MARCH
A memory administration system that translates line-related service order data into switch provisioning messages and automatically transmits the messages to targeted stored program control system switches.

N

NBR
New Business Request

NC
“No Circuits” - All circuits busy announcement.

NIW
Network Information Warehouse - A system that stores central office blockage data for use in processing trouble reports.

NMLI
Native Mode LAN Interconnection

NPA
Numbering Plan Area

NXX
The "exchange" portion of a telephone number.

O

OASIS
Obtain Availability Services Information System - A BellSouth front-end processor, which acts as an interface between COFFI and RNS. This system takes the USOCs in COFFI and translates them to English for display in RNS.

OASISBSN
OASIS software contract for feature/service

OASISNET
OASIS software contract for feature/service

OASISOCP
OASIS software contract for feature/service

ORDERING
The process and functions by which resale services or unbundled network elements are ordered from BellSouth as well as the process by which an LSR or ASR is placed with BellSouth.

Order Types
The following order types are used in this document:

(1). T - The "to" portion of a change of address. This Order Type is used to connect main service at a new address when a customer moves from one address to another in any of the nine states within the BellSouth region. A "T" Order Type is always pared with an "F" Order Type which will have the same telephone number following the "F" Order Type Code unless the orders are within different states.

(2). N - Orders establishing a new account. Also, this Order Type Code is occasionally used when changing from one type of system to another such as when changing from PBX to Centrex.

(3). C - Order Type used for the following conditions: changes or partial connections or disconnections of service or equipment; change of telephone number, grade or class of main line, additional lines, auxiliary lines, PBX trunks and stations; addition of trunks or lines to existing accounts; move of equipment (other than change of address); temporary suspension and restoration of service at customer's request.

(4). R - Order Type used for the following conditions: additions, removals or changes in directory listings; responsibility change orders, addition, removal or changes in directory and billing information; other record corrections where no "field work" is involved.

OSPCM
Outside Plant Contract Management System - A system that provides scheduling and completion information on outside plant construction activities.

OSS
Operations Support System - A support system or database which is used to mechanize the flow or performance of work. The term is used to refer to the overall system consisting of hardware complex, computer operating system(s), and

application which is used to provide the support functions.

OUT OF SERVICE
Customer has no dial tone and cannot call out.

P Q

PMAP
Performance Measurement Analysis Platform

PON
Purchase Order Number

POTS
Plain Old Telephone Service

PREDICTOR
A system which is used to administer proactive maintenance and rehabilitation activities on outside plant facilities, provide access to selected work groups to Mechanized Loop Testing and switching system I/O ports.

Preordering
The process and functions by which vital information is obtained, verified, or validated prior to placing a service request.

PRI
Primary Rate ISDN

Provisioning
The process and functions by which necessary work is performed to activate a service requested via an LSR or ASR and to initiate the proper billing and accounting functions.

PSIMS
Product/Service Inventory Management System - A BellSouth database Operations System which contains availability information on switching system features and capabilities and on BellSouth service availability. This database is used to verify the availability of a feature or service in an NXX prior to making a commitment to the customer.

PSIMSORB
PSIMS software contract for feature/service.

R

RNS
Regional Negotiation System - An internal BellSouth service order entry system used by BellSouth Consumer Services to input service orders in BellSouth format.

ROS
Regional Ordering System

RRC
Residence Repair Center - The BellSouth Consumer Services trouble receipt center which serves residential customers.

RSAG
Regional Street Address Guide - The BellSouth database, which contains street addresses validated to be accurate with state and local governments.

RSAGADDR
RSAG software contract for address search.

RSAGTN
RSAG software contract for telephone number search.

S

SAC
Service Advocacy Center

SEEM
Self Effectuating Enforcement Mechanism

SOCS
Service Order Control System - A system which routes service order images among BellSouth drop points and BellSouth OSS during the service provisioning process.

SOIR
Service Order Interface Record - any change effecting activity to a customer account by service order that impacts 911/E911

SONGS
Service Order Negotiation and Generation System.

Syntactically Incorrect Query
A query that cannot be fulfilled due to insufficient or incorrect input data from the end user. For example, A CLEC would like to query the legacy system for the following address: 1234 Main ST. Entering "1234 Main ST" will be considered syntactically correct because valid characters were used in the address field. However, entering "AB34 Main ST" will be considered syntactically incorrect because invalid characters (i.e., alpha characters were entered in numeric slots) were used in the address field.

T

TAFI
Trouble Analysis Facilitation Interface - The BellSouth Operations System that supports trouble receipt center personnel in taking and handling customer trouble reports.

TAG
Telecommunications Access Gateway – TAG was designed to provide an electronic interface, or machine-to-machine interface for the bi-directional flow of information between BellSouth's OSSs and participating CLECs.

TN
Telephone Number

Total Manual Fallout
The number of LSRs which are entered electronically but require manual entering into a service order generator.

U V

UNE
Unbundled Network Element

UCL
Unbundled Copper Link

USOC
Universal Service Order Code

W X Y Z

WATS
Wide Area Telephone Service

WFA
Work Force Administration

WMC
Work Management Center

WTN
Working Telephone Number.

Appendix C: BellSouth Audit Policy

C-1: BellSouth's Internal Audit Policy

BellSouth's internal efforts to make certain that the reports produced by the PMAP platform are of the highest accuracy has been formalized into a Performance Measurements Quality Assurance Plan (PMQAP) that documents and augments existing quality assurance processes integral to the production and validation of Performance Measurements data.

The plan consists of three sections:

1. Change Control addresses the quality assurance steps involved in the introduction of new measurements and changes to existing measurements.
2. Production addresses the quality assurance steps used to create monthly SQM reports.
3. Monthly Validation addresses the quality assurance steps used to ensure accurate posting of monthly results.

The BellSouth PMQAP will ensure that BellSouth effectively and consistently provides accurate performance measurements data for the activities included in the SQM. The BellSouth Internal Audit department will audit this plan and its quality assurance steps annually, beginning in 4Q01.

C-2: BellSouth's External Audit Policy

BellSouth currently provides many CLECs with audit rights as a part of their individual interconnection agreements. BellSouth has developed a proposed Audit Plan for use by the parties to an audit. If requested by a Public Service Commission or by a CLEC exercising contractual audit rights, BellSouth will agree to undergo a comprehensive audit of the current year aggregate level reports for both BellSouth and the CLECs for each of the next five (5) years (2001 - 2005), to be conducted by an independent third party auditor jointly selected by BellSouth and the CLEC. The results of audits will be made available to all the parties subject to proper safeguards to protect proprietary information. Requested audits include the following specifications:

1. The cost shall be borne by BellSouth.
2. The independent third party auditor shall be selected with input from BellSouth, the PSC, if applicable, and the CLEC(s).
3. BellSouth, the PSC and the CLECs shall jointly determine the scope of the audit.

These comprehensive audits are intended to provide the basis for the PSCs and CLECs to determine that the SQM, PMAP and SEEM produce accurate data that reflects each States Order for performance measurements. Once this has been verified by an initial audit, the BellSouth PMQAP will provide the basis for future audits.

Appendix D: OSS Tables

OSS-1: Average Response Interval and Percent Within Interval (Pre-Ordering/Ordering)

Table 1: Legacy System Access Times For RNS

System	Contract	Data	< 2.3 sec.	> 6 sec.	<= 6.3 sec.	Avg. Sec.	# of Calls
RSAG	RSAG-TN	Address	x	x	x	x	x
RSAG	RSAG-ADDR	Address	x	x	x	x	x
ATLAS	ATLAS-TN	TN	x	x	x	x	x
DSAP	DSAP-DDI	Schedule	x	x	x	x	x
CRIS	CRSACCTS	CSR	x	x	x	x	x
OASIS	OASISBIG	Feature/Service	x	x	x	x	x

Table 2: Legacy System Access Times For R0S

System	Contract	Data	< 2.3 sec.	> 6 sec.	<= 6.3 sec.	Avg. sec.	# of Calls
RSAG	RSAG-TN	Address	x	x	x	x	x
RSAG	RSAG-ADDR	Address	x	x	x	x	x
ATLAS	ATLAS-TN	TN	x	x	x	x	x
DSAP	DSAP-DDI	Schedule	x	x	x	x	x
CRIS	CRSOCSR	CSR	x	x	x	x	x
OASIS	OASISBIG	Feature/Service	x	x	x	x	x

Table 3: Legacy System Access Times For LENS

System	Contract	Data	< 2.3 sec.	> 6 sec.	<= 6.3 sec.	Avg. sec.	# of Calls
RSAG	RSAG-TN	Address	x	x	x	x	x
RSAG	RSAG-ADDR	Address	x	x	x	x	x
ATLAS	ATLAS-TN	TN	x	x	x	x	x
DSAP	DSAP	Schedule	x	x	x	x	x
CRIS	CRSECSRL	CSR	x	x	x	x	x
COFFI	COFFI/USOC	Feature/Service	x	x	x	x	x
P/SIMS	PSIMS/ORB	Feature/Service	x	x	x	x	x

Table 4: Legacy System Access Times For TAG

System	Contract	Data	< 2.3 sec.	> 6 sec.	<= 6.3 sec.	Avg. sec.	# of Calls
RSAG	RSAG-TN	Address	x	x	x	x	x
RSAG	RSAG-ADDR	Address	x	x	x	x	x
ATLAS	ATLAS-TN	TN	x	x	x	x	x
ATLAS	ATLAS-MLH	TN	x	x	x	x	x
ATLAS	ATLAS-DID	TN	x	x	x	x	x
DSAP	DSAP-DDI	Schedule	x	x	x	x	x
CRIS	TAG-CSR	CSR	x	x	x	x	x
P/SIMS	PSIM/ORB	Feature/Service	x	x	x	x	x

OSS-1: Average Response Interval and Percent Within Interval (Pre-Ordering/Ordering)

SEEM OSS Legacy System

System	BellSouth	CLEC
Telephone Number/Address		
RSAG-ADDR	RNS, ROS	TAG, LENS
RSAG-TN	RNS, ROS	TAG, LENS
Atlas	RNS,ROS	TAG. LENS
Appointment Scheduling		
DSAP	RNS, ROS	TAG, LENS
CSR Data		
CRSACCTS	RNS	
CRSOCSR	ROS	
CRSECSRL		LENS
TAG-CSR		TAG
Service/Feature Availability		
OASISBIG	RNS, ROS	
PSIMS/ORB, COFFI		LENS, TAG

OSS-2: OSS Availability (Pre-Ordering/Ordering)

OSS Availability

OSS Interface	Applicable to	% Availability
EDI	CLEC	x
LENS	CLEC	x
LEO	CLEC	x
LESOG	CLEC	x
PSIMS	CLEC	x
TAG	CLEC	x
LNP Gateway	CLEC	x
COG	CLEC	x
SOG	CLEC	x

DOM	CLEC	x
DOE	CLEC/BellSouth	x
CRIS	CLEC/BellSouth	x
ATLAS/COFFI	CLEC/BellSouth	x
BOCRIS	CLEC/BellSouth	x
DSAP	CLEC/BellSouth	x
RSAG	CLEC/BellSouth	x
SOCS	CLEC/BellSouth	x
SONGS	CLEC/BellSouth	x
RNS	BellSouth	x
ROS	BellSouth	x

OSS-2: OSS Availability (Pre-Ordering/Ordering)

SEEM OSS Availability

OSS Interface	Applicable to	% Availability
EDI	CLEC	x
LENS	CLEC	x
LEO	CLEC	x
LESOG	CLEC	x
PSIMS	CLEC	x
TAG	CLEC	x
LNP Gateway	CLEC	x
COG	CLEC	x
SOG	CLEC	x
DOM	CLEC	x

OSS-3: OSS Availability (Maintenance & Repair)

OSS Availability (M&R)

OSS Interface	% Availability
BellSouth TAFI	x
CLEC TAFI	x
CLEC ECTA	x
BellSouth & CLEC	
CRIS	x
LMOS HOST	x
LNP Gateway	x
MARCH	x
OSPCM	x
PREDICTOR	x
SOCS	x

OSS-3: OSS Availability (Maintenance & Repair)

SEEM OSS Availability (M&R)

OSS Interface	% Availability
CLEC TAFI	x
CLEC ECTA	x

OSS-4: Response Interval (Maintenance & Repair)

Legacy System Access Times for M&R

System	BellSouth & CLEC	Count <= 4	> 4 <= 10	<= 10	> 10	> 30	Avg. Int.
CRIS	x	x	x	x	x	x	x
DLETH	x	x	x	x	x	x	x
DLR	x	x	x	x	x	x	x
LMOS	x	x	x	x	x	x	x
LMOSupd	x	x	x	x	x	x	x
LNP	x	x	x	x	x	x	x
MARCH	x	x	x	x	x	x	x
OSPCM	x	x	x	x	x	x	x
Predictor	x	x	x	x	x	x	x
SOCS	x	x	x	x	x	x	x
NIW	x	x	x	x	x	x	x

TAFI

System	Open Trouble Ticket	Status Trouble Ticket	Mechanized Line Testing	Close Trouble Ticket
CRIS	x			
DLETH	x			
DLR	x			
LMOS	x	x		x
LMOSSupd	x	x	x	x
LNP	x			
MARCH	x			
OSPCM	x	x		
Predictor	x	x		
SOCS	x	x		
NIW	x			

Note: Depending on the type of customer report multiple systems maybe touched in one transaction.

Product	PRODUCT TYPE	REQTYPE	ACT TYPE	F/T[3]	COMPLEX SERVICE	COMPLEX ORDER	PLANNED FALLOUT FOR MANUAL HANDLING[1]	EDI	TAG[2]	LENS[4]	COMMENTS
2 wire analog DID trunk port	U	F	N	No	UNE	Yes	NA	N	N	N	
2 wire analog port	U	F	N	No	UNE	No	Yes	Y	Y	Y	
2 wire ISDN digital line	U	A	N,T	No	UNE	Yes	NA	N	N	N	
2 wire ISDN digital loop	U	A	N,C,D	Yes	UNE	Yes	No	Y	Y	N	
2 wire ISDN digital loop - LNP	U	B	V,P,Q	Yes	UNE	Yes	No	Y	Y	N	
3 Way Calling	R,B	E,M	N,C,V,W,P,Q,T	Yes	No	No	No	Y	Y	Y	
3rd Party Call Block	R,B	E,M	N,C,V,W,D,P,Q,T	Yes	No	No	No	Y	Y	Y	
4 wire analog voice grade loop	U	A	T	No	UNE	Yes	Yes	Y	Y	N	
4 wire analog voice grade loop	U	A	N	Yes	UNE	Yes	No	Y	Y	N	
4 wire DS1 & PRI digital loop	U	A	N,T	No	UNE	Yes	NA	N	N	N	
4 wire DSO & PRI digital loop	U	A	N,T	No	UNE	Yes	NA	N	N	N	
4 wire ISDN DSI digital trunk ports	U	A	N,T	No	UNE	Yes	NA	N	N	N	
4-WIRE DS1 LOOP WITH CHANNELIZATION WITH PORT DS1	C	M	N,C,D,V	No	Yes	Yes	NA	N	N	N	
4-WIRE DS1 LOOP WITH CHANNELIZATION WITH PORT TRUNK SERVICE	C	M	N,C,D,V	No	Yes	Yes	NA	N	N	N	
900 Call Block	R,B	E,M	N,C,V,W,D,P,Q,T	Yes	No	No	No	Y	Y	Y	
Accupulse	C	E	N,C,T,V,W	No	Yes	Yes	NA	N	N	N	
ADSL	R,B,C	E	V,W,D	Yes	C/S	C/S	No	Y	Y	Y	NOTE THIS PRODUCT CAN BE ORDERED FOR RES/BUS AND CENTREX
Analog Data/Private Line	C	E	N,C,T,V,W,D	No	Yes	Yes	NA	N	N	N	
Area Plus	R,B	E,M	N,C,V,W,P,Q,T	Yes	No	No	No	Y	Y	Y	
ATM (ASYNCHRONOUS TRANFER MODE)	C	E	N,C,V,W,D	No	Yes	Yes	NA	N	N	N	
Basic Rate ISDN *Unbundled	U	A	T	No	Yes	Yes	Yes	Y	Y	N	
Basic Rate ISDN *Unbundled	U	A	N,V,D	Yes	UNE	Yes	No	Y	Y	Y	
Basic Rate ISDN *Unbundled	U	A	C,T	No	UNE	Yes	Yes	Y	Y	Y	
Basic Rate ISDN 2 Wire UNE P	C	M	N,C,D,V	No	Yes	Yes	NA	N	N	N	Manual
Basic Rate ISDN 2 Wire	C	E	N,C, D,T,V,P,Q	No	Yes	Yes	Yes	Y	Y	Y	

Product	PRODUCT TYPE	REQTYPE	ACT TYPE	F/T[3]	COMPLEX SERVICE	COMPLEX ORDER	PLANNED FALLOUT FOR MANUAL HANDLING[1]	EDI	TAG[2]	LENS[4]	COMMENTS
BELLSOUTH CHANNELIZED TRUNKS	C	E	N,C,D,T,V,W,P,Q	No	Yes	Yes	NA	N	N	N	
Call Block	R,B	E,M	N,C,V,W,P,Q,T	Yes	No	No	No	Y	Y	Y	
Call Forwarding	R,B	E,M	N,C,V,W,P,Q,T	Yes	No	No	No	Y	Y	Y	
Call Return	R,B	E,M	N,C,V,W,P,Q,T	Yes	No	No	No	Y	Y	Y	
Call Selector	R,B	E,M	N,C,V,W,P,Q,T	Yes	No	No	No	Y	Y	Y	
Call Tracing	R,B	E,M	N,C,V,W,P,Q,T	Yes	No	No	No	Y	Y	Y	
Call Waiting	R,B	E,M	N,C,V,W,P,Q,T	Yes	No	No	No	Y	Y	Y	
Call Waiting Deluxe	R,B	E,M	N,C,V,W,P,Q,T	Yes	No	No	No	Y	Y	Y	
Caller ID	R,B	E,M	N,C,V,W,P,Q,T	Yes	No	No	No	Y	Y	Y	
BELLSOUTH CENTREX*	C	P	N,C,D,W,T,S,B,L,V,P	No	Yes	Yes	NA	N	N	N	
UNE P CENTREX	C	M	N,C,D,V	No	Yes	Yes	NA	N	N	N	
Collect Call Block	R,B	E,M	N,C,V,W,D,P,Q,T	Yes	No	No	No	Y	Y	Y	
DID	C	N	N,C,D,V,W,T,P,Q	No	Yes	Yes	Yes	Y	Y	Y	
2-WIRE DIRECT INWARD DIAL (DID) TRUNK PORT AND VOICE GRADE LOOP COMBINATION	C	M	N,C,D,V	No	Yes	Yes	NA	N	N	N	
Digital Data Transport	U	E	N,C,T,V,W	No	UNE	Yes	NA	N	N	N	
DIGITAL DIRECT INTEGRATION TERMINATION SERVICES (DDITS) DS1	C	M	N,C,D,V	No	Yes	Yes	NA	N	N	N	
DIGITAL DIRECT INTEGRATION TERMINATION SERVICES (DDITS) TRUNK SERVICE	C	M	N,C,D,V	No	Yes	Yes	NA	N	N	N	
Directory Listing Indentions	B,U	B,C,E,F,J,M,N	N,C,T,R,V,W,P,Q	No	No	No	Yes	Y	Y	Y	
Directory Listings (simple)	R,B,U	B,C,E,F,J,M,N	N,C,R,V,W,P,Q	Yes	No	No	No	Y	Y	Y	
Directory Listings (simple)	R,B,U	B,C,E,F,J,M,N	T	No	No	No	Yes	Y	Y	N	
Directory Listings Captions	R,B,U	B,C,E,F,J,M,N	N,C,T,R,V,W,P,Q	No	No	Yes	Yes	Y	Y	Y	
DIFFERENT PREMISE ADDRESS (DPA)	C	E	N,C,D,V,W,T	No	Yes	Yes	NA	N	N	N	
DS1Loop	U	A	N,D,V	Yes	UNE	Yes	No	Y	Y	Y	
DS3	U	A	N,C,V	No	UNE	Yes	NA	N	N	N	
DSO Loop	U	A	N,D,V	Yes	UNE	Yes	No	Y	Y	Y	
DSO Loop	U	A	C,T	No	No	No	Yes	Y	Y	Y	
Enhanced Caller ID	R,B	E	C,D,N,V,W,P,Q,T	Yes	No	No	No	Y	Y	Y	

Product	PRODUCT TYPE	REQTYPE	ACT TYPE	F/T[3]	COMPLEX SERVICE	COMPLEX ORDER	PLANNED FALLOUT FOR MANUAL HANDLING[1]	EDI	TAG[2]	LENS[4]	COMMENTS
Enhanced Extended Links (EELS)	U	A	C,D,N,T,V	Yes	No	No	No	Y	Y	Y	
ESSX	C	P	C,D,T,V,S,B,W,L,P,Q	No	Yes	Yes	NA	N	N	N	
Flat Rate/Business	B	E, M	C,D,N,V,W,T Y,B,L,S,D,T,P,Q	Yes	No	No	No	Y	Y	Y	
Flat Rate/Residence	R	E, M	C,D,N,V,W,T Y,B,L,S,D,T,P,Q	Yes	No	No	No	Y	Y	Y	
FLEXSERV	C	E	N,C,D,T,V,W,P,Q	No	Yes	Yes	NA	N	N	N	
Frame Relay	C	E	N,C,D,V,W	No	Yes	Yes	NA	N	N	N	
FX/FCO	C	E	N,C,D,T,V,W,P,Q	No	Yes	Yes	NA	N	N	N	
UNE P FX/FCO (RES,BUS,PBX) (NOTE: THIS PRODUCT WILL NOT BE AVAILABLE UNTIL 08--01-02	C	M	N,C,V,D,T,S,B,L,W,Y,P,Q	No	Yes	Yes	NA	N	N	N	
Ga. Community Calling	R,B	M	C,D,N,V,W,P,Q	No	No	No	NA	N	N	N	
Ga. Community Calling	R,B	E	T	No	No	No	Yes	Y	Y	N	
HDSL	U	A	T	No	UNE	No	Yes	Y	Y	N	
HDSL	U	A	N,C,D,V	Yes	UNE	No	No	Y	Y	Y	
Hunting MLH	R,B	E, M	C,D,N,T,V,W	No	C/S[4]	C/S	Yes	Y	Y	N	
Hunting Series Completion	R,B	E, M	C,D,N,V,W	Yes	C/S	C/S	No	Y	Y	Y	
Hunting Series Completion	R,B	E, M	T	No	No	No	Yes	Y	Y	N	
INP to LNP Conversion	U	C	C	No	UNE	Yes	Yes	Y	Y	N	
LightGate	C	E	N,C,D,T,V,W,P,Q	No	Yes	Yes	NA	N	N	N	
Line Sharing	U	A	N,C,D,V,P,Q	Yes	UNE	No	No	Y	Y	Y	
Line Splitting	U	A	N,C,D	Yes	UNE	No	No	Y	Y	Y	
LNP With Complex Listing	U	C	P,V,Q	No	UNE	Yes	Yes	Y	Y	N	
LNP with Complex Services	U	C	P,V,Q	No	UNE	Yes	Yes	Y	Y	N	
LNP with Partial Migration	U	C	P,V,Q	No	UNE	Yes	Yes	Y	Y	N	
LNP	U	C	P,V,Q	Yes	UNE	Yes	No	Y	Y	N	
Local Number Portability (INP to LNP)	U	C	C	No	UNE	No	Yes	Y	Y	N	
INP	U	B,C	D	No	UNE	No	Yes	Y	Y	N	
Loop+LNP	U	B	V,P,Q	Yes	UNE	No	No	Y	Y	N	
Measured Rate/Bus	R,B	E,M	C,D,N,V,W,P,Q,T Y,B,L,S,D	Yes	No	No	No	Y	Y	Y	

Product	PRODUCT TYPE	REQTYPE	ACT TYPE	F/T[3]	COMPLEX SERVICE	COMPLEX ORDER	PLANNED FALLOUT FOR MANUAL HANDLING[1]	EDI	TAG[2]	LENS[4]	COMMENTS
Measured Rate/Res	R,B	E,M	C,D,N,V,W,P,Q,T Y,B,L,S,D	Yes	No	No	No	Y	Y	Y	
Megalink POINT TO POINT	C	E	N,V,W,T,D,C,P,Q	No	Yes	Yes	NA	N	N	N	
Megalink CHANNELIZED	C	E	N,V,W,T,D,C,P,Q	No	Yes	Yes	NA	N	N	N	
Memory Call	R,B	E, M	C,D,N,V,W,P,Q,T	Yes	No	No	No	Y	Y	Y	
Memory Call Ans. Svc.	R,B	E, M	C,D,N,V,W,P,Q,T	Yes	No	No	No	Y	Y	Y	
Multiserv	C	P	N,C,D,T,V,S,B,W,L,P,Q	No	Yes	Yes	NA	N	N	N	
Native Mode LAN Interconnection (NMLI)	C	E	N,C,D,V,W	No	Yes	Yes	NA	N	N	N	
Off-Prem Stations	C	E	N,C,D,V,W,T,P,Q	No	Yes	Yes	NA	N	N	N	
Optional Calling Plan	R,B	E, M	N,V,P,Q,W	Yes	No	No	No	Y	Y	Y	
Package/Complete Choice and Area Plus	R,B	E, M	N,C,V,W,P,Q	Yes	No	No	No	Y	Y	Y	
Package/Complete Choice and Area Plus	R,B	E, M	T	No	No	No	Yes	Y	Y	N	
Pathlink/ Primary Rate ISDN	C	E	N,C,D,T,V,W,P,Q	No	Yes	Yes	NA	N	N	N	
4-WIRE ISDN PRI UNE COMBO	C	M	N,C,D,V	No	Yes	Yes	NA	N	N	N	
Pay Phone Provider	B	E,M	C,D,T,N,V,W,P,Q	Yes	No	No	No	Y	Y	Y	
PBX Standalone Port	C	F	N,C,D	No	Yes	Yes	Yes	Y	Y	N	
PBX Trunks	C	E	N,C,D,V,W,T,P,Q	No	Yes	Yes	Yes	Y	Y	N	
PIC/LPIC Change	R,B,C	E,M	C,V,P,Q,T	Yes	No	No	No	Y	Y	Y	
PIC/LPIC Freeze	R,B,C	E,M	N,C,V,P,Q,T	Yes	No	No	No	Y	Y	Y	
PORT/LOOP COMBO 2-WIRE PBX	C	M	N,C,D,V	No	No	No	Yes	Y	Y	N	
Port/Loop Simple	U	M	N,C,D,V	Yes	No	No	No	Y	Y	Y	
Preferred Call Forward	R,B,U	E,M	C,D,N,V,W,P,Q,T	Yes	No	No	No	Y	Y	Y	
RCF Basic	R,B	E,M	N,D,W,V,P,Q,T	No	No	No	Yes	Y	Y	N	
Remote Access to CF	R,B	E,M	C,D,N,V,W,P,Q,T	No	No	No	NA	Y	Y	N	
Repeat Dialing	R,B	E,M	C,D,N,V,W,P,Q,T	Yes	No	No	No	Y	Y	Y	
Ringmaster	R,B	E,M	C,D,N,V,W,P,Q,T	Yes	No	No	No	Y	Y	Y	
Smartpath	R,B	E	C,D,T,N,V,W	No	Yes	Yes	NA	N	N	N	
SmartRING	C	E	N,D,C,V,W	No	Yes	Yes	NA	N	N	N	
Speed Calling	R,B	E,M	C,D,N,V,W,P,Q,T	Yes	No	No	No	Y	Y	Y	
Synchronet	C	E	N,D,C,V,W	No	Yes	Yes	Yes	Y	Y	N	
Three Way Call Block	R,B	E,M	C,D,N,V,W,P,Q,T	Yes	No	No	No	Y	Y	N	

Product	PRODUCT TYPE	REQTYPE	ACT TYPE	F/T[3]	COMPLEX SERVICE	COMPLEX ORDER	PLANNED FALLOUT FOR MANUAL HANDLING[1]	EDI	TAG[2]	LENS[4]	COMMENTS
Tie Lines	C	E	N,C,D,V,W,T,P,Q	No	Yes	Yes	NA	N	N	N	
TOLL FREE DIALING (TFD)	C	E	N,C,D,V,W	No	Yes	Yes	NA	N	N	N	
Touchtone	R,B	E	C,D,N,V,W,P,Q,T	Yes	No	No	No	Y	Y	Y	
Unbundled Loop-Analog 2W, SL1, SL2	U	A,B	D,N,V	Yes	UNE	No	No	Y	Y	Y	
Unbundled Loop-Analog 2W, SL1,SL2	U	A,B	C **	Yes	UNE	No	Yes	Y	Y	Y	
Unbundled Universal Digital Channel (UDC) Loop	U	A	N,D	Yes	UNE	No	No	Y	Y	Y	
WATS*	C	E	W,D,N,C,V	No	Yes	Yes	NA	N	N	N	
XDSL	U	A,B	N,C,V,D	Yes	UNE	No	No	Y	Y	Y	
XDSL	U	A,B	T	No	No	No	Yes	Y	Y	N	

Product: U-UNE; C-Complex; B-Business; R-Residence

Reqtype: A-Loop; B-Loop with LNP/INP; C-LNP/INP; E-Resale; F-Port; J-Directory Listing and Directory Assistance; M–UNE-P; N-DID Resale; P-Centrex Resale, ACT: N-New installation-; C-Change an existing account; D-Disconnection; T-Outside move of end user location; R-Record activity is for ordering administrative changes; V-Conversion of service to new LSP as specified; W-Conversion of service to new LSP "as is"; S-Suspend; B-Restore; Y-Deny; L-Seasonal Suspend; P-Partial Migration (initial); Q-Partial Migration (subsequent)

Note 1: Planned Fallout for Manual Handling denotes those services that are electronically submitted and are not intended to flow-through due to the complexity of the service.

Note 2: The TAG column includes thse LSRs submitted via Robo TAG.

Note 3: For all services that indicate 'No' for flow-through, the following reasons, in addition to complex services or complex order, also prompt manual handling: Expedites from CLECs, special pricing plans, partial migrations (although conversions-as-is flow through for issue 9 unless migrating the main TN and a new TN must be assigned), class of service invalid in certain states with some TOS e.g. government, or cannot be changed when changing main TN on C activity, pnding order review required (Example: Any pending service order (PSO) not related to current PON, pending service order (PSO) with multiple service orders pending realted to current PON and SUP received), more than 25 business lines and more than 15 loops, CSR inaccuracies such as invalid or missing CSR data in CRIS, Directory listings with Indentions or Captions, , transfer of calls option for CLEC end user – new TN not yet posted to CRIS.

Note 4: Services with C/S in the Complex Service and/or the Complex Order columns can be either complex or simple.

Note 5: The following list of items will not FT:

LSRs with Project or RPON fields populated

**SL1 REQTYP A, ACT C, LNA N, C, or D

**SL2 REQTYP A, ACT C, LNA C

REQTYP B, C, ACT P when migrating main telephone number

REQTYP B, C ACT V with Complex

REQTYP E, M, N and P; ACT = V, LNA = V (LNP to Resale/UNE Switched Combinations)

Attachment 10

BellSouth Disaster Recovery Plan

TABLE OF CONTENTS

1 DEFINITIONS……..……..…3
2 PURPOSE…….……...…3
3 SINGLE POINT OF CONTACT……..……...…..3
4 IDENTIFYING THE PROBLEM……4
5 SITE CONTROL……4
6 ENVIRONMENT CONCERNS……5
7 THE EMERGENCY CONTROL CENTER (ECC)……...5
8 RECOVERY PROCEDURES…….. 6
9 CLEC OUTAGE…….....6
10 BELLSOUTH OUTAGE……...……..6
11 COMBINED OUTAGE (CLEC AND BELLSOUTH EQUIPMENT)……..8
12 IDENTIFICATION PROCEDURES……8
13 ACRONYMS……...…….8

1 DEFINITIONS

1.1 Aid is defined as the capability to furnish assistance, help, support, and relief as defined and dictated by the situation.

1.2 Disaster is any natural disaster or incident, which has the potential to or actually causes damage to CLEC Network assets (e.g. tornado, hurricane, major fire); any condition of major proportion caused by hardware and/or software failures or damage, procedural error, or other major system-affecting conditions (e.g. software problems or errors, equipment failures which threaten critical CLEC SERVICE CENTER functions) or any Network condition which has the potential to or does affect a large geographic, or major metropolitan area (e.g. local exchange carrier failure cellular carrier failure major CLEC Work Center failure). A more complete listing of examples is found in Appendix C to the Operational Understanding found on BellSouth's website at http://www.interconnection.bellsouth.com/guides/other_guides/html/gopeu001/index.htm

1.3 Extended period of time is defined as a service restoration interval exceeding five (5) to seven (7) calendar days.

1.4 Long-term is defined the same as an extended period of time.

1.5 Telecommunications Service Priority (TSP) Program created by the FCC establishes the provisioning and restoration priority for telecommunications services that are vital to coordinating and responding to crisis.

2 PURPOSE

2.1 In the unlikely event of a disaster occurring that affects BellSouth's long-term ability to deliver traffic to a Competitive Local Exchange Carrier (CLEC), general procedures have been developed by BellSouth to hasten the recovery process in accordance with the Telecommunications Service Priority (TSP) Program established by the Federal Communications Commission to identify and prioritize telecommunication services that support national security or emergency preparedness (NS/EP) missions. Since each location is different and could be affected by an assortment of potential problems, a detailed recovery plan is impractical. However, in the process of reviewing recovery activities for specific locations, some basic procedures emerge that appear to be common in most cases. These general procedures should apply to any disaster that affects the delivery of traffic for an extended time period. Each CLEC will be given the same consideration during an outage, and service will be restored as quickly as possible. This document will cover the basic recovery procedures that would apply to every CLEC and can also be found as Appendix C to the Operational Understanding .

http://www.interconnection.bellsouth.com/guides/other_guides/html/gopeu001/index.htm

3 SINGLE POINT OF CONTACT

3.1 When a problem is experienced, regardless of the severity, the BellSouth Network Management Center (NMC) will observe traffic anomalies and begin monitoring the situation. Controls will be appropriately applied to insure the sanity of BellSouth's network; and, in the event that a switch or facility node is lost, the NMC will attempt to circumvent the failure using available reroutes.

3.2 BellSouth's NMC will remain in control of the restoration efforts until the problem has been identified as being a long-term outage. At that time, the NMC will contact BellSouth's Emergency Control Center (ECC) and relinquish control of the recovery

efforts. Even though the ECC may take charge of the situation, the NMC will continue to monitor the circumstances and restore traffic as soon as damaged network elements are revitalized.

3.3 The telephone number for the BellSouth Network Management Center in Atlanta, as published in Telcordia's National Network Management Directory, is 404-321-2516.

4 IDENTIFYING THE PROBLEM

4.1 During the early stages of problem detection, the NMC will be able to tell which CLECs are affected by the catastrophe. Further analysis and/or first hand observation will determine if the disaster has affected CLEC equipment only, BellSouth equipment only or a combination. The initial restoration activity will be largely determined by the equipment that is affected.

4.2 Once the nature of the disaster is determined and after verifying the cause of the problem, the NMC will initiate reroutes and/or transfers that are jointly agreed upon by the affected CLECs' Network Management Center and the BellSouth NMC. The type and percentage of controls used will depend upon available network capacity. Controls necessary to stabilize the situation will be invoked and the NMC will attempt to re-establish as much traffic as possible.

4.3 For long-term outages, recovery efforts will be coordinated by the Emergency Control Center (ECC). Traffic controls will continue to be applied by the NMC until facilities are re-established. As equipment is made available for service, the ECC will instruct the NMC to begin removing the controls and allow traffic to resume.

5 SITE CONTROL

5.1 In the total loss of building use scenario, what likely exists will be a smoking pile of rubble. This rubble will contain many components that could be dangerous. It could also contain any personnel on the premises at the time of the disaster. For these reasons, the local fire marshal with the assistance of the police will control the site until the building is no longer a threat to surrounding properties and the companies have secured the site from the general public.

5.2 During this time, the majority owner of the building should be arranging for a demolition contractor to mobilize to the site with the primary objective of reaching the cable entrance facility for a damage assessment. The results of this assessment would then dictate immediate plans for restoration, both short term and permanent.

5.3 In a less catastrophic event, i.e., the building is still standing and the cable entrance facility is usable, the situation is more complex. The site will initially be controlled by local authorities until the threat to adjacent property has diminished. Once the site is returned to the control of the companies, the following events should occur.

5.4 An initial assessment of the main building infrastructure systems (mechanical, electrical, fire and life safety, elevators, and others) will establish building needs. Once these needs are determined, the majority owner should lead the building restoration efforts. There may be situations where the site will not be totally restored within the confines of the building. The companies must individually determine their needs and jointly assess the cost of permanent restoration to determine the overall plan of action.

5.5 Multiple restoration trailers from each company will result in the need for designated space and installation order. This layout and control is required to maximize the amount of restoration equipment that can be placed at the site, and the priority of placements.

5.6 Care must be taken in this planning to ensure other restoration efforts have logistical access to the building. Major components of telephone and building equipment will need to be removed and replaced. A priority for this equipment must also be jointly established to facilitate overall site restoration. (Example: If the AC switchgear has sustained damage, this would be of the highest priority in order to regain power, lighting, and HVAC throughout the building.)

5.7 If the site will not accommodate the required restoration equipment, the companies would then need to quickly arrange with local authorities for street closures, rights of way or other possible options available.

6 ENVIRONMENTAL CONCERNS

6.1 In the worse case scenario, many environmental concerns must be addressed. Along with the police and fire marshal, the state environmental protection department will be on site to monitor the situation.

6.2 Items to be concerned with in a large central office building could include:

1. Emergency engine fuel supply. Damage to the standby equipment and the fuel handling equipment could have created "spill" conditions that have to be handled within state and federal regulations.

2. Asbestos-containing materials that may be spread throughout the wreckage. Asbestos could be in many components of building, electrical, mechanical, outside plant distribution, and telephone systems.

3. Lead and acid. These materials could be present in potentially large quantities depending upon the extent of damage to the power room.

4. Mercury and other regulated compounds resident in telephone equipment.

5. Other compounds produced by the fire or heat.

6.3 Once a total loss event occurs at a large site, local authorities will control immediate clean up (water placed on the wreckage by the fire department) and site access.

6.4 At some point, the companies will become involved with local authorities in the overall planning associated with site clean up and restoration. Depending on the clean up approach taken, delays in the restoration of several hours to several days may occur.

6.5 In a less severe disaster, items listed above are more defined and can be addressed individually depending on the damage.

6.6 In each case, the majority owner should coordinate building and environmental restoration as well as maintain proper planning and site control.

7 THE EMERGENCY CONTROL CENTER (ECC)

7.1 The ECC is located in the Midtown 1 Building in Atlanta, Georgia. During an emergency, the ECC staff will convene a group of pre-selected experts to inventory the damage and initiate corrective actions. These experts have regional access to BellSouth's personnel and equipment and will assume control of the restoration activity anywhere in the nine-state area.

7.2 In the past, the ECC has been involved with restoration activities resulting from hurricanes, ice storms and floods. They have demonstrated their capabilities during these calamities as well as during outages caused by human error or equipment failures. This group has an excellent record of restoring service as quickly as possible.

7.3 During a major disaster, the ECC may move emergency equipment to the affected location, direct recovery efforts of local personnel and coordinate service restoration activities with the CLECs. The ECC will attempt to restore service as quickly as possible using whatever means is available, leaving permanent solutions, such as the replacement of damaged buildings or equipment, for local personnel to administer.

7.4 Part of the ECC's responsibility, after temporary equipment is in place, is to support the NMC efforts to return service to the CLECs. Once service has been restored, the ECC will return control of the network to normal operational organizations. Any long-term changes required after service is restored will be made in an orderly fashion and will be conducted as normal activity.

8 RECOVERY PROCEDURES

8.1 The nature and severity of any disaster will influence the recovery procedures. One crucial factor in determining how BellSouth will proceed with restoration is whether or not BellSouth's equipment is incapacitated. Regardless of whose equipment is out of service, BellSouth will move as quickly as possible to aid with service recovery; however, the approach that will be taken may differ depending upon the location of the problem.

9 CLEC OUTAGE

9.1 For a problem limited to one CLEC (or a building with multiple CLECs), BellSouth has several options available for restoring service quickly. For those CLECs that have agreements with other CLECs, BellSouth can immediately start directing traffic to a provisional CLEC for completion. This alternative is dependent upon BellSouth having concurrence from the affected CLECs.

9.2 Whether or not the affected CLECs have requested a traffic transfer to another CLEC will not impact BellSouth's resolve to re-establish traffic to the original destination as quickly as possible.

10 BELLSOUTH OUTAGE

10.1 Because BellSouth's equipment has varying degrees of impact on the service provided to the CLECs, restoring service from damaged BellSouth equipment is different. The outage will probably impact a number of Carriers simultaneously. However, the ECC will be able to initiate immediate actions to correct the problem.

10.2 A disaster involving any of BellSouth's equipment locations could impact the CLECs, some more than others. A disaster at a Central Office (CO) would only impact the delivery of traffic to and from that one location, but the incident could affect many Carriers. If the Central Office is a Serving Wire Center (SWC), then traffic from the

entire area to those Carriers served from that switch would also be impacted. If the switch functions as an Access Tandem, or there is a tandem in the building, traffic from every CO to every CLEC could be interrupted. A disaster that destroys a facility hub could disrupt various traffic flows, even though the switching equipment may be unaffected.

10.3 The NMC would be the first group to observe a problem involving BellSouth's equipment. Shortly after a disaster, the NMC will begin applying controls and finding re-routes for the completion of as much traffic as possible. These reroutes may involve delivering traffic to alternate Carriers upon receiving approval from the CLECs involved. In some cases, changes in translations will be required. If the outage is caused by the destruction of equipment, then the ECC will assume control of the restoration.

10.4 **Loss of a Central Office**

10.4.1 When BellSouth loses a Central Office, the ECC will

a) Place specialists and emergency equipment on notice;

b) Inventory the damage to determine what equipment and/or functions are lost;

c) Move containerized emergency equipment and facility equipment to the stricken area, if necessary;

d) Begin reconnecting service on a parity basis for Hospitals, Police and other emergency agencies or customers served by BellSouth or CLEC in accordance with the TSP priority restoration coding scheme entered in the BellSouth Maintenance database immediately prior to the emergency.

10.5 **Loss of a Central Office with Serving Wire Center Functions**

10.5.1 The loss of a Central Office that also serves as a Serving Wire Center (SWC) will be restored as described in Section 10.4.

10.6 **Loss of a Central Office with Tandem Functions**

10.6.1 When BellSouth loses a Central Office building that serves as an Access Tandem and as a SWC, the ECC will

a) Place specialists and emergency equipment on notice;

b) Inventory the damage to determine what equipment and/or functions are lost;

c) Move containerized emergency equipment and facility equipment to the stricken area, if necessary;

d) Begin reconnecting service on a parity basis for Hospitals, Police and other emergency agencies or customers served by BellSouth or CLEC in accordance with the TSP priority restoration coding scheme entered in the BellSouth Maintenance database immediately prior to the emergency;

e) Re-direct as much traffic as possible to the alternate access tandem (if available) for delivery to those CLECs utilizing a different location as a SWC;

f) Begin aggregating traffic to a location near the damaged building. From this location, begin re-establishing trunk groups to the CLECs for the delivery of traffic normally found on the direct trunk groups. (This aggregation point may be the alternate access tandem location or another CO on a primary facility route.)

10.7 **Loss of a Facility Hub**

10.7.1 In the event that BellSouth loses a facility hub, the recovery process is much the same as above. Once the NMC has observed the problem and administered the appropriate controls, the ECC will assume authority for the repairs. The recovery effort will include

a) Placing specialists and emergency equipment on notice;

b) Inventorying the damage to determine what equipment and/or functions are lost;

c) Moving containerized emergency equipment to the stricken area, if necessary;

d) Reconnecting service on a parity basis for Hospitals, Police and other emergency agencies or customers served by BellSouth or CLEC in accordance with the TSP priority restoration coding scheme entered in the BellSouth Maintenance database immediately prior to the emergency; and

e) If necessary, BellSouth will aggregate the traffic at another location and build temporary facilities. This alternative would be viable for a location that is destroyed and building repairs are required.

11 COMBINED OUTAGE (CLEC AND BELLSOUTH EQUIPMENT)

11.1 In some instances, a disaster may impact BellSouth's equipment as well as the CLECs'. This situation will be handled in much the same way as described in Section 10.6. Since BellSouth and the CLECs will be utilizing temporary equipment, close coordination will be required.

12 T1 IDENTIFICATION PROCEDURES

12.1 During the restoration of service after a disaster, BellSouth may be forced to aggregate traffic for delivery to a CLEC. During this process, T1 traffic may be consolidated onto DS3s and may become unidentifiable to the Carrier. Because resources will be limited, BellSouth may be forced to "package" this traffic entirely differently than normally received by the CLECs. Therefore, a method for identifying the T1 traffic on the DS3s and providing the information to the Carriers is required.

13 ACRONYMS

CLEC - Competitive Local Exchange Carrier

CO - Central Office (BellSouth)

DS3 - Facility that carries 28 T1s (672 circuits)

ECC - Emergency Control Center (BellSouth)

NMC - Network Management Center

SWC - Serving Wire Center (BellSouth switch)

T1 - Facility that carries 24 circuits

TSP - Telecommunications Service Priority

Hurricane Information

During a hurricane, BellSouth will make every effort to keep CLECs updated on the status of our network. Information centers will be set up throughout BellSouth Telecommunications. These centers are not intended to be used for escalations, but rather to keep the CLEC informed of network related issues, area damages and dispatch conditions, etc.

Hurricane-related information can also be found on line at http://www.interconnection.bellsouth.com/network/disaster/dis_resp.htm. Information concerning Mechanized Disaster Reports can also be found at this website by clicking on CURRENT MDR REPORTS or by going directly to http://www.interconnection.bellsouth.com/network/disaster/mdrs.htm.

BST Disaster Management Plan

BellSouth maintenance centers have geographical and redundant communication capabilities. In the event of a disaster removing any maintenance center from service another geographical center would assume maintenance responsibilities. The contact numbers will not change and the transfer will be transparent to the CLEC.

Attachment 11

Bona Fide Request & New Business Request Process

1 BONA FIDE REQUEST AND NEW BUSINESS REQUEST PROCESS

1.1 The Parties agree that MCI is entitled to order any Unbundled Network Element, Interconnection option, service option or Resale Service required to be made available by FCC or Commission requirements pursuant to the Communications Act of 1934, as modified by the Telecommunications Act of 1996 (the "Act"). MCI also shall be permitted to request the development of new or revised facilities or service options which are not required by the Act. Procedures applicable to requesting the addition of such facilities or service options are specified in this Attachment 11.

2 BONA FIDE REQUEST

2.1 A Bona Fide Request (BFR) is to be used when MCI makes a request of BellSouth to provide a new or modified Unbundled Network Element, Interconnection option, or other service option (Requested Services) pursuant to the Act that was not previously included in this Agreement.

2.2 A BFR shall be submitted in writing by MCI and shall specifically identify the requested service date, technical requirements, space requirements and/or such other specifications that clearly define the request such that BellSouth has sufficient information to analyze and prepare a response. Such a request shall also include MCI's designation of the request as being pursuant to the Telecommunications Act of 1996 (i.e. a BFR). The request shall be sent to MCI's designated BellSouth Sales contact.

2.3 If BellSouth determines that the preliminary analysis of the requested BFR is of such complexity that it will cause BellSouth to expend inordinate resources to evaluate the BFR, BellSouth shall notify MCI within ten (10) business days of BellSouth's receipt of BFR that a fee will be required prior to the evaluation of the BFR. MCI shall submit such fee within thirty (30) business days of BellSouth's notice that a fee is required. Within thirty (30) business days of BellSouth's receipt of the fee, BellSouth shall respond to MCI by providing a preliminary analysis of such Requested Services that are the subject of the BFR. The preliminary analysis shall either confirm that BellSouth will offer access to the Requested Services or confirm that BellSouth will not offer the Requested Services. If the preliminary analysis states that BellSouth will not offer the Requested Services, BellSouth will provide an explanation of why the request is not technically feasible, does not qualify as a BFR for the Requested Services or is otherwise not required to be provided under the Act. If preliminary analysis of the requested BFR is not of such complexity that it will cause BellSouth to expend inordinate resources to evaluate the BFR, within thirty (30) business days of its receipt of the BFR, BellSouth shall respond to MCI by providing a preliminary analysis of such Requested Services that are the subject of the BFR. The preliminary analysis shall either confirm that BellSouth will offer access to the Requested Services or confirm that BellSouth will not offer the Requested Services. If the preliminary analysis states that BellSouth will not offer the Requested Services, BellSouth will provide an explanation of why the request is not technically feasible, does not qualify as a BFR for the Requested Services or is otherwise not required to be provided under the Act.

2.4 MCI may cancel a BFR at any time. If MCI cancels the request more than ten (10) business days after submitting the BFR request, MCI shall pay BellSouth's reasonable and demonstrable costs of processing and/or implementing the BFR up to the date of cancellation in addition to any fee submitted in accordance with Section 2.3 above.

2.5 MCI will have thirty (30) business days from receipt of preliminary analysis to accept the preliminary analysis or cancel the BFR as set forth in Section 2.4. Acceptance of the preliminary analysis must be in writing and accompanied by all nonrecurring charges quoted in the preliminary analysis. The nonrecurring charges as stated in the preliminary analysis cover the initial work required to develop the project plan, create the design parameters, and establish all activities and resources required to complete the BFR (Development Costs). Development costs are non-refundable. If MCI fails to respond within this 30-day period, the BFR will be deemed cancelled.

2.5.1 BellSouth shall propose a firm price quote and a detailed implementation plan within thirty (30) business days of receipt of MCI's acceptance of the preliminary analysis.

2.5.2 MCI shall have thirty (30) business days from receipt of firm price quote to accept or deny the firm price quote and submit any additional nonrecurring, non-refundable fees quoted in the firm price quote.

2.6 Unless MCI agrees otherwise, all prices shall be consistent with the pricing principles of the Act, FCC and/or the Commission.

2.7 If MCI believes that BellSouth's firm price quote is not consistent with the requirements of the Act, or if either Party believes that the other is not acting in good faith in requesting, negotiating or processing the BFR, either Party may seek FCC or Commission arbitration, as appropriate, to resolve the dispute. Any such arbitration applicable to Unbundled Network Elements and/or Interconnection shall be conducted in accordance with standards prescribed in Section 252 of the Act.

2.8 Upon agreement to the rates, terms and conditions of a BFR, an amendment to this Agreement may be required.

3 NEW BUSINESS REQUEST

3.1 A New Business Request (NBR) is to be used by MCI to make a request of BellSouth for a new or modified feature or capability of an existing product or service, a new product or service that is not deployed within the BellSouth network or operations and business support systems, or a new or modified service option that was not previously included in this Agreement (Requested Enhanced Services).

3.2 An NBR shall be submitted in writing by MCI and shall specifically identify the requested service date, technical requirements, space requirements and/or such specifications that clearly define the request such that BellSouth has sufficient information to analyze and prepare a response. The request shall be sent to MCI's designated BellSouth Sales contact.

3.3 If BellSouth determines that the preliminary analysis of the requested NBR is of such complexity that it will cause BellSouth to expend inordinate resources to evaluate the NBR, BellSouth shall notify MCI that a fee will be required prior to the evaluation of the NBR. MCI shall submit such fee within ten (10) business days of BellSouth's notice that a fee is required. BellSouth shall use reasonable efforts to respond to the NBR within (30) business days following BellSouth's receipt of the fee by providing a preliminary analysis of such Requested Enhanced Services that are the subject of the NBR. The

preliminary analysis shall either confirm that BellSouth will offer access to the Requested Enhanced Services or confirm that BellSouth will not offer the Requested Enhanced Services. If the preliminary analysis states that BellSouth will not offer the Requested Services, BellSouth will provide an explanation of why the request is not technically feasible, does not qualify as an NBR for the Requested Services or is otherwise not required to be provided under the Act. If preliminary analysis of the requested NBR is not of such complexity that it will cause BellSouth to expend inordinate resources to evaluate the NBR, BellSouth will use reasonable efforts to respond to MCI within thirty (30) business days of its receipt of an NBR by providing a preliminary analysis of such Requested Services that are the subject of the NBR. The preliminary analysis shall either confirm that BellSouth will offer access to the Requested Enhanced Services or confirm that BellSouth will not offer the Requested Enhanced Services. If the preliminary analysis states that BellSouth will not offer the Requested Services, BellSouth will provide an explanation of why the request is not technically feasible, does not qualify as an NBR for the Requested Services or is otherwise not required to be provided under the Act.

3.4 MCI may cancel an NBR at any time. If MCI cancels the request more than ten (10) business days after submitting it, MCI shall pay BellSouth's reasonable and demonstrable costs of processing and/or implementing the NBR up to the date of cancellation in addition to any fee submitted in accordance with Section 3.3 above.

3.5 MCI will have thirty (30) business days from receipt of preliminary analysis to accept the preliminary analysis or cancel the NBR as set forth in Section 3.4. Acceptance of the preliminary analysis must be in writing and accompanied by all nonrecurring charges quoted in the preliminary analysis. The nonrecurring charges as stated in the preliminary analysis cover the initial work required to develop the project plan, create the design parameters, and establish all activities and resources required to complete the NBR. If MCI fails to respond within this 30-day period, the NBR will be deemed cancelled.

3.6 If MCI accepts the preliminary analysis, BellSouth shall propose a firm price quote and a detailed implementation plan within sixty (60) business days of receipt of MCI's acceptance of the preliminary analysis and nonrecurring fees quoted in the preliminary analysis.

3.7 MCI shall have thirty (30) business days from receipt of the firm price quote to accept or deny the firm price quote and submit any additional nonrecurring, non-refundable fees quoted in the firm price quote.

3.8 Upon agreement to the terms of a NBR, an amendment to this Agreement, or a separate agreement, may be required.