# MFN AGREEMENT

This MFN Agreement ("MFN Agreement"), which shall be filed with and is subject to approval by the State Commission and shall become effective ten (10) days after approval by such Commission ("Effective Date"), is entered into by and between Knology of Alabama, Inc., Knology of South Carolina, Inc. and Knology of Tennessee, Inc. ("CLEC"), a Delaware corporation on behalf of itself, and BellSouth Telecommunications, Inc. d/b/a AT&T Alabama, AT&T Florida, AT&T Georgia, AT&T Kentucky, AT&T Louisiana, AT&T Mississippi, AT&T North Carolina, AT&T South Carolina and AT&T Tennessee, ("AT&T"), having an office at 675 W. Peachtree Street, Atlanta, Georgia, 30375, on behalf of itself and its successors and assigns.

WHEREAS, the Telecommunications Act of 1996 (the "Act") was signed into law on February 8, 1996; and

WHEREAS, CLEC has requested that AT&T make available the Interconnection Agreement in its entirety executed between AT&T and Comcast Phone II, Inc. Comcast Phone, LLC dated August 26, 2005 for the States of Alabama, South Carolina and Tennessee ("Interconnection Agreement").

WHEREAS, pursuant to Section 252(i) of the Act, for purposes of this MFN Agreement, CLEC has adopted the Interconnection Agreement for the States of Alabama, South Carolina and Tennessee;

NOW, THEREFORE, in consideration of the promises and mutual covenants of this MFN Agreement, CLEC and AT&T hereby agree as follows:

1. AT&T-9STATE shall be defined as the States of Alabama, Florida, Georgia, Kentucky, Louisiana, Mississippi, North Carolina, South Carolina and Tennessee.

2. CLEC and AT&T shall adopt in its entirety the Interconnection Agreement dated August 26, 2005 and any and all amendments to said Interconnection Agreement executed and approved by the appropriate state regulatory commission as of the date of the execution of this MFN Agreement. The Interconnection Agreement and all amendments are attached hereto as Exhibit 1 and incorporated herein by this reference. The adoption of this Interconnection Agreement with amendment(s) consists of the following:

| ITEM |
|---|
| Adoption Papers |
| Signature Page |
| Exhibit 1 Cover Page |
| Comcast Phone II, Inc. Comcast Phone, LLC Agreement |
| Notice Section Change Amendment – Effective February 28, 2007 |
| Amendment to Extend Term Date – Effective June 11, 2008 |

3. In the event that CLEC consists of two (2) or more separate entities as set forth in the preamble to this MFN Agreement, all such entities shall be jointly and severally liable for the obligations of CLEC under this MFN Agreement.

4. The term of this MFN Agreement shall be from the Effective Date as set forth above and shall expire as set forth in Section 2 of the General Terms and Conditions of the Interconnection Agreement. For the purposes of determining the expiration date of this MFN Agreement, the expiration date shall be September 24, 2011.

5. CLEC shall accept and incorporate any approved amendments to the Interconnection Agreement executed as a result of any final judicial, regulatory, or legislative action.

6. In entering into this MFN Agreement, the Parties acknowledge and agree that neither Party waives, and each Party expressly reserves, any of its rights, remedies or arguments it may have at law or under the intervening law or regulatory change provisions in this MFN Agreement with respect to any orders, decisions, legislation or proceedings and any remands by the FCC, state utility commission, court, legislature or other governmental body including, without limitation, any such orders, decisions, legislation, proceedings, and remands which were issued, released or became effective prior to the

Effective Date of this MFN Agreement, or which the Parties have not yet fully incorporated into this Agreement or which may be the subject of further government review.

7. Every notice, consent or approval of a legal nature, required or permitted by this MFN Agreement shall be in writing and shall be delivered either by hand, by overnight courier or by US mail postage prepaid addressed to:

To AT&T:

Contract Management
ATTN: Notices Manager
311 S. Akard, 9th Floor
Dallas, TX 75202-5398
Facsimile Number: 214-464-2006

With a Copy To:

Business Markets Attorney
Suite 4300
675 W. Peachtree St.
Atlanta, GA 30375

To CLEC:

Knology, Inc.
Mr. Bruce Schoonover
1241 O.G. Skinner Drive
West Point, Georgia 31833
Telephone: 706-645-3966
e-mail: bruce.schoonover@knology.com

With a Copy To:

Walt Sapronov, Esq.
Sapronov & Associates, P.C.
400 Northridge Road, Suite 515
Atlanta, Georgia 30350
Telephone: 770-399-9100
e-mail: wsapronov@wstelecomlaw.com

or at such other address as the intended recipient previously shall have designated by written notice to the other Party. Where specifically required, notices shall be by certified or registered mail. Unless otherwise provided in this MFN Agreement, notice by mail shall be effective on the date it is officially recorded as delivered by return receipt or equivalent, and in the absence of such record of delivery, it shall be presumed to have been delivered the fifth day, or next business day after the fifth day, after it was deposited in the mails.

**Knology of Alabama, Inc., Knology of South Carolina, Inc. and Knology of Tennessee, Inc.**

By: _____

Name: CHAD S. WALTHER

Title: VP GENERAL COUNSEL

Date: 10/8/10

**BellSouth Telecommunications, Inc. d/b/a AT&T Alabama, AT&T South Carolina and AT&T Tennessee, by AT&T Operations, Inc., its authorized agent**

By: _____

Name: Eddie A. Reed, Jr.

Title: Director-Interconnection Agreements

Date: 10-14-10

| | RESALE OCN | CLEC OCN |
|---|---|---|
| ALABAMA | 8951 | 7779, 6093 |
| SOUTH CAROLINA | 8951 | 6093 |
| TENNESSEE | 8951 | 0066, 6093 |

**ACNA** CJY

EXHIBIT 1

## Customer Name: Comcast Phone II, Inc. Comcast Phone, LLC


| | |
|---|---|
| Comcast Phone, II | 2 |
| Table of Contents | 3 |
| GeneralTerms&Conditions | 5 |
| Signature Page | 26 |
| Attachment_1_-_Resale | 27 |
| Att_1_-_Resale_Discounts_&_Rates | 51 |
| Attachment 2 COMCAST II UNE | 57 |
| Att_2_-_Network_Element_Rates_Exh_A | 101 |
| Att_2_-_Network_Element_Rates__Exh_B | 193 |
| Attachment 3 Local Interconnection | 217 |
| Attach 3_Rates_CPII | 245 |
| Attachment 4 Central Office Collocation | 252 |
| Attachment 4 Remote Site Collocation | 309 |
| Att_4_-_Collocation_Rates_-_Exhibit_B | 349 |
| Att_5_-_Access_to_Numbers_and_Number_Portability | 379 |
| Attachment 6 Ordering PreOrdering Provisioning Maintenance and Repair | 385 |
| Att 7 Billing | 394 |
| Att_7_-_CMDS_Rates | 409 |
| Att_8_-_Rights_of_Way | 415 |
| Att_9_-_Performance_Measurements | 417 |
| Att_9_-_Perf_Meas_Intro | 629 |
| Att_10_-_Disaster_Recovery_Plan | 631 |
| Att_11_-_BFR_and_NBR_Process | 640 |
| Notices Section Change | 647 |
| Comcast Phone II, Inc. Comcast Phone, LLC | 649 |


Note: This page is not part of the actual signed contract/amendment, but is present for record keeping purposes only.

# Interconnection Agreement

**Between**

**BellSouth Telecommunications, Inc.**

**and**

**Comcast Phone II, Inc. Comcast Phone, LLC**

# TABLE OF CONTENTS

**General Terms and Conditions**


**Definitions**

**1. CLEC Certification**

**2. Term of the Agreement**

**3. Nondiscriminatory Access .**

**4. Court Ordered Requests for Call Detail Records and Other Subscriber Information**

**5. Liability and Indemnification**

**6. Intellectual Property Rights and Indemnification**

**7. Proprietary and Confidential Information**

**8. Resolution of Disputes**

**9. Taxes**

**10. Force Majeure**

**11. Adoption of Agreements**

**12. Modification of Agreement**

**13. Legal Rights**

**14. Indivisibility**

**15. Severability**

**16. Non-Waivers**

**17. Governing Law**

**18. Assignments and Transfers**

**19. Notices**

**20. Rule of Construction**

**21. Headings of No Force or Effect**

**22. Multiple Counterparts**

**23. Filing of Agreement**

**24. Compliance with Law**

**25. Necessary Approvals**

**26. Good Faith Performance**

**27. Rates**

**28. Rate True-Up**

**29. Survival**

**30. Entire Agreement**

# TABLE OF CONTENTS (cont'd)

**Attachment 1 - Resale**

**Attachment 2 - Network Elements and Other Services**

**Attachment 3 - Network Interconnection**

**Attachment 4 - Physical Collocation – Central Office**

**Attachment 4 - Physical Collocation – Remote Site**

**Attachment 5 - Access to Numbers and Number Portability**

**Attachment 6 – Pre-Ordering, Ordering, Provisioning and Maintenance and Repair**

**Attachment 7 - Billing**

**Attachment 8 - Rights-of-Way, Conduits and Pole Attachments**

**Attachment 9 - Performance Measurements**

**Attachment 10- BellSouth Disaster Recovery Plan**

**Attachment 11–Bona Fide Request and New Business Request Process**

# AGREEMENT
# GENERAL TERMS AND CONDITIONS

THIS AGREEMENT is made by and between BellSouth Telecommunications, Inc., ("BellSouth"), a Georgia corporation, Comcast Phone, LLC, a Delaware limited liability company, and Comcast Phone II, Inc., a Delaware corporation, and their respective subsidiaries and affiliates covered under this Agreement, as listed in Exhibit C, ("Comcast Phone") and shall be deemed effective thirty days following the date of the last signature of both Parties ("Effective Date"). This Agreement may refer to either BellSouth or Comcast Phone or both as a "Party" or "Parties."

## W I T N E S S E T H

**WHEREAS**, BellSouth is an incumbent local exchange telecommunications company authorized to provide telecommunications services in the states of Alabama, Florida, Georgia, Kentucky, Louisiana, Mississippi, North Carolina, South Carolina and Tennessee; and

**WHEREAS**, Comcast Phone is a Competitive Local Exchange Carrier ("CLEC") authorized to provide telecommunications services in the states of Alabama, Louisiana, Mississippi, North Carolina, South Carolina and Tennessee; and may later become authorized to provide such services in other states in which BellSouth is so authorized; and

**WHEREAS**, Comcast Phone wishes to resell BellSouth's telecommunications services and purchase network elements and other services, and, solely in connection therewith, may wish to utilize Collocation Space or space available pursuant to Adjacent Arrangement (all as defined in Attachment 4 of this Agreement); and Other Services (as defined in Attachment 2 of this Agreement)

**WHEREAS**, the Parties wish to interconnect their telecommunications network facilities and exchange traffic pursuant to Sections 251 and 252 of the Act.

**NOW THEREFORE**, in consideration of the mutual covenants contained herein, and other good and valuable consideration, the receipt and sufficiency of which is hereby acknowledged, BellSouth and Comcast Phone agree as follows:

### Definitions

**Affiliate** is defined as a person that (directly or indirectly) owns or controls, is owned or controlled by, or is under common ownership or control with, another person. For purposes of this paragraph, the term "own" means to own an equity interest (or equivalent thereof) of more than 10 percent.

**Commission** is defined as the appropriate regulatory agency in each state of BellSouth's nine-state region (Alabama, Florida, Georgia, Kentucky, Louisiana, Mississippi, North Carolina, South Carolina, and Tennessee).

**Competitive Local Exchange Carrier (CLEC)** means a telephone company certificated by the Commission to provide local exchange service within BellSouth's franchised area.

**Effective Date** is defined as the date that the Agreement is effective for purposes of rates, terms and conditions and shall be thirty (30) days after the date of the last signature executing the Agreement. Future amendments for rate changes will also be effective thirty (30) days after the date of the last signature executing the amendment, except as otherwise specifically ordered by the Commission.

**End User** means the ultimate user of the Telecommunications Service.

**FCC** means the Federal Communications Commission.

**Telecommunications** means the transmission, between or among points specified by the user, of information of the user's choosing, without change in the form or content of the information as sent and received.

**Telecommunications Service** means the offering of telecommunications for a fee directly to the public, or to such classes of users as to be effectively available directly to the public, regardless of the facilities used.

**Telecommunications Act of 1996 (Act)** means Public Law 104-104 of the United States Congress effective February 8, 1996. The Act amended the Communications Act of 1934 (47 U.S.C. Section 1 et. seq.).

**1. CLEC Certification**

1.1 If Comcast Phone chooses to purchase services hereunder, in a state where the Parties do not yet have an interconnection agreement, Comcast Phone agrees to provide BellSouth in writing the certificate number or docket number, for the docket pending certification, for all states in which Comcast Phone requests coverage under this Agreement except Kentucky prior to BellSouth filing this Agreement with the appropriate Commission for approval.

1.2 To the extent Comcast Phone is not certified as a CLEC in each state covered by this Agreement as of the execution hereof, Comcast Phone may not purchase services hereunder in that state. If Comcast Phone chooses to purchase services hereunder, in a state where Comcast Phone is not yet certified, Comcast Phone will notify BellSouth in writing and provide CLEC certification when it becomes certified to operate in any other state covered by this Agreement and upon receipt thereof, Comcast Phone may thereafter purchase services pursuant to this Agreement in that state. BellSouth will file this Agreement with the appropriate Commission for approval.

1.3 Should Comcast Phone's certification in any state be rescinded or otherwise terminated, BellSouth may, at its election, terminate this Agreement in accordance with any applicable Commission rules for termination. As permitted by Commission rules, BellSouth may refuse to provide services hereunder in that state until certification is reinstated in that state. Comcast Phone shall provide an effective certification to do business issued by the secretary of state or equivalent authority in each state covered by this Agreement.

**2. Term of the Agreement**

2.1 The term of this Agreement shall be three years, beginning on the Effective Date and shall apply to the BellSouth territory in the states of Alabama, Louisiana, Mississippi, North Carolina, South Carolina and Tennessee. Notwithstanding any prior agreement of the Parties, the rates, terms and conditions of this Agreement shall not be applied retroactively prior to the Effective Date.

2.2 The Parties agree that no later than one hundred and eighty (180) days prior to the expiration of this Agreement, they shall commence negotiations for a new agreement to be effective beginning on the expiration date of this Agreement ("Subsequent Agreement").

2.3 If, within one hundred and thirty-five (135) days of commencing the negotiation referred to in Section 2.2 above, the Parties are unable to negotiate new terms, conditions and prices for a Subsequent Agreement, either Party may petition the Commission to establish appropriate terms, conditions and prices for the Subsequent Agreement pursuant to 47 U.S.C. 252.

2.4 If, as of the expiration of this Agreement, a Subsequent Agreement has not been executed by the Parties, and the Parties are not yet in arbitration, this Agreement shall continue on a month-to-month basis while a Subsequent Agreement is actively being negotiated in good faith or alternatively, a timely petition has been filed with the respective Commission and the Subsequent Agreement is subject to the respective Commission arbitration pursuant to 252 of the Act. Upon conversion to a month-to-month term, during such negotiations, provided that the Parties are not in arbitration, then either Party, in its discretion, may terminate this Agreement upon sixty (60) days written notice to the other Party. Notwithstanding the foregoing, the Agreement cannot be terminated prior to 180 days after the original expiration date. In the event that BellSouth terminates this Agreement as provided herein, BellSouth shall continue to provide services to Comcast Phone pursuant to the terms, conditions and rates set forth in BellSouth's standard interconnection agreement then in effect and made available to CLECs requesting negotiations pursuant to Section 251 of the Act. If the Parties are actively pursuing good faith negotiations for a Subsequent Agreement or a transition plan from this Agreement, except as expressly provided, neither Party shall refuse to provide services to the other Party during the negotiation of the Subsequent Agreement or the transition from this Agreement to the Subsequent Agreement.

2.5 In the event that BellSouth's standard interconnection agreement becomes effective between the Parties, the Parties may continue to negotiate a Subsequent Agreement or arbitrate disputed issues to reach a Subsequent Agreement as set forth in Section 2.3 above, and the terms of such Subsequent Agreement shall be effective as of the effective date stated in such Subsequent Agreement and shall not be applied retroactively to the expiration date of this Agreement unless the Parties agree otherwise.

2.6 To the extent Comcast Phone is not exchanging traffic with BellSouth, or Comcast Phone has not submitted orders pursuant to this Agreement within one-hundred-eighty (180) days of the Effective Date, BellSouth may at any time terminate this Agreement upon thirty (30) days written notice to Comcast Phone. Additionally, if BellSouth learns that Comcast Phone has ceased doing business in all states covered by this Agreement, BellSouth may immediately terminate this Agreement. For purposes of this section only, BellSouth may rely on the following sources to identify whether Comcast Phone has ceased doing business in a state: (1) written notice from Comcast Phone stating that Comcast Phone has ceased operations in a state, or (2) any filings, public notices, decisions or orders available from a Commission, the FCC or a court of competent jurisdiction.

**3. Operational Support Systems**

Comcast Phone shall pay charges for Operational Support Systems (OSS) as set forth in this Agreement in Attachment 1 and/or in Attachments 2, 3 and 6 as applicable**.**

**4. Parity**

The services and service provisioning that BellSouth provides Comcast Phone for resale will be at least equal in quality to that provided to BellSouth, or any BellSouth subsidiary, affiliate or end user. In connection with resale, BellSouth will provide Comcast Phone with pre-ordering, ordering, maintenance and trouble reporting, and daily usage data functionality that will enable Comcast Phone to provide equivalent levels of customer service to their local exchange customers as BellSouth provides to its own end users. BellSouth shall also provide Comcast Phone with unbundled network elements, and access to those elements, that is at least equal in quality to that which BellSouth provides BellSouth, or any BellSouth subsidiary, affiliate or other CLEC, including preordering, ordering, provisioning, maintenance and trouble reporting, and daily usage functionality. Each Party will provide number portability to its customers with minimum impairment of functionality, quality, reliability and convenience.

**5. Court Ordered Requests for Call Detail Records and Other Subscriber Information**

5.1 Subpoenas Directed to BellSouth. Where BellSouth provides resold services or local switching for Comcast Phone, BellSouth shall respond to subpoenas and court ordered requests delivered directly to BellSouth for the purpose of providing call detail records when the targeted telephone numbers belong to Comcast Phone

End Users. Billing for such requests will be generated by BellSouth and directed to the law enforcement agency initiating the request. BellSouth shall maintain such information for Comcast Phone End Users for the same length of time as it maintains such information for its own End Users.

5.2 Subpoenas Directed to Comcast Phone. Where BellSouth is providing to Comcast Phone Telecommunications Services for resale or providing to Comcast Phone the local switching function, then Comcast Phone agrees that in those cases where Comcast Phone receives subpoenas or court ordered requests regarding targeted telephone numbers belonging to Comcast Phone End Users, and where Comcast Phone does not have the requested information, Comcast Phone will advise the law enforcement agency initiating the request to redirect the subpoena or court ordered request to BellSouth for handling in accordance with 6.1 above.

5.3 In all other instances, where either Party receives a request for information involving the other Party's End User, the Party receiving the request will advise the law enforcement agency initiating the request to redirect such request to the other Party.

**6. Liability and Indemnification**

6.1 Liability. In the event that either Party consists of two (2) or more separate entities as set forth in this Agreement and/or any Amendments hereto, all such entities shall be jointly and severally liable for the obligations of the other Party under this Agreement.

6.1.1 Comcast Phone Liability. In the event that Comcast Phone consists of two (2) or more separate entities as set forth in this Agreement and/or any Amendments hereto, or any third party authorized in writing by Comcast Phone, places orders under this Agreement using Comcast Phone's company codes or identifiers, all such entities shall be jointly and severally liable for the obligations of Comcast Phone under this Agreement.

6.2 Liability for Acts or Omissions of Third Parties. Neither Party shall be liable to the other Party for any act or omission of another telecommunications company providing services to such other Party.

6.3 Limitation of Liability

6.3.1 Except for any indemnification obligations of the Parties hereunder, each Party's liability to the other for any loss, cost, claim, injury or liability or expense, including reasonable attorneys' fees relating to or arising out of any negligent act or omission in its performance of this Agreement whether in contract or in tort, shall be limited to a credit for the actual cost of the services or functions not performed or improperly performed.

6.3.2 Limitations in Tariffs. A Party may, in its sole discretion, provide in its tariffs and contracts with its End Users and third parties that relate to any service, product or function provided or contemplated under this Agreement, that to the maximum extent permitted by Applicable Law, such Party shall not be liable to the End User or third party for (i) any loss relating to or arising out of this Agreement, whether in contract, tort or otherwise, that exceeds the amount such Party would have charged that applicable person for the service, product or function that gave rise to such loss and (ii) Consequential Damages. To the extent that a Party elects not to place in its tariffs or contracts such limitations of liability, and the other Party incurs a loss as a result thereof, such Party shall indemnify and reimburse the other Party for that portion of the loss that would have been limited had the first Party included in its tariffs and contracts the limitations of liability that such other Party included in its own tariffs at the time of such loss.

6.3.3 Neither BellSouth nor Comcast Phone shall be liable for damages to the other Party's terminal location, equipment or End User premises resulting from the furnishing of a service, including, but not limited to, the installation and removal of equipment or associated wiring, except to the extent caused by a Party's negligence or willful misconduct or by a Party's failure to ground properly a local loop after disconnection.

6.3.4 Under no circumstance shall a Party be responsible or liable for indirect, incidental, or consequential damages, including, but not limited to, economic loss or lost business or profits, damages arising from the use or performance of equipment or software, or the loss of use of software or equipment, or accessories attached thereto, delay, error, or loss of data. In connection with this limitation of liability, each Party recognizes that the other Party may, from time to time, provide advice, make recommendations, or supply other analyses related to the services, or facilities described in this Agreement, and, while each Party shall use diligent efforts in this regard, the Parties acknowledge and agree that this limitation of liability shall apply to provision of such advice, recommendations, and analyses.

6.3.5 To the extent any specific provision of this Agreement purports to impose liability, or limitation of liability, on either Party different from or in conflict with the liability or limitation of liability set forth in this Section, then with respect to any facts or circumstances covered by such specific provisions, the liability or limitation of liability contained in such specific provision shall apply.

6.4 Indemnification for Certain Claims. The Party providing services hereunder, its affiliates and its parent company, shall be indemnified, defended and held harmless by the Party receiving services hereunder against any claim, loss or damage arising from the receiving company's use of the services provided under this Agreement pertaining to (1) claims for libel, slander or invasion of privacy arising from the content of the receiving company's own communications, or (2) any claim, loss or damage claimed by the End User of the Party receiving services arising from such company's use or reliance on the providing company's services, actions, duties, or obligations arising out of this Agreement.

6.5 Disclaimer. EXCEPT AS SPECIFICALLY PROVIDED TO THE CONTRARY IN THIS AGREEMENT, NEITHER PARTY MAKES ANY REPRESENTATIONS OR WARRANTIES TO THE OTHER PARTY CONCERNING THE SPECIFIC QUALITY OF ANY SERVICES, OR FACILITIES PROVIDED UNDER THIS AGREEMENT. THE PARTIES DISCLAIM, WITHOUT LIMITATION, ANY WARRANTY OR GUARANTEE OF MERCHANTABILITY OR FITNESS FOR A PARTICULAR PURPOSE, ARISING FROM COURSE OF PERFORMANCE, COURSE OF DEALING, OR FROM USAGES OF TRADE.

**7. Intellectual Property Rights and Indemnification**

7.1 No License. No patent, copyright, trademark or other proprietary right is licensed, granted or otherwise transferred by this Agreement. Both Parties are strictly prohibited from any use, including but not limited to in sales, in marketing or advertising of telecommunications services, of any name, service mark or trademark (collectively, the "Marks") of the other Party. The Marks of a Party include those Marks owned directly by such Party and those Marks that such Party has a legal and valid license to use.

7.2 Ownership of Intellectual Property. Any intellectual property that originates from or is developed by a Party shall remain the exclusive property of that Party. Except for a limited license to use patents or copyrights to the extent necessary for the Parties to use any facilities or equipment (including software) or to receive any service solely as provided under this Agreement, no license in patent, copyright, trademark or trade secret, or other proprietary or intellectual property right now or hereafter owned, controlled or licensable by a Party, is granted to the other Party or shall be implied or arise by estoppel. It is the responsibility of each Party to ensure at no additional cost to the other Party that it has obtained any necessary licenses in relation to intellectual property of third Parties used in its network that may be required to enable the other Party to use any facilities or equipment (including software), to receive any service, or to perform its respective obligations under this Agreement.

7.3 Indemnification. The Party providing a service pursuant to this Agreement will indemnify, hold harmless, and defend the Party receiving such service or data provided as a result of such service against claims of intellectual property infringement arising solely from the use by the receiving Party of such service in the manner contemplated under this Agreement and will indemnify and defend the receiving Party for any damages awarded based solely on such claims in accordance with Section 6 preceding.

7.4 Claim of Infringement. In the event that use of any facilities or equipment (including software), becomes, or in the reasonable judgment of the Party who owns the affected network is likely to become, the subject of a claim, action, suit, or proceeding based on intellectual property infringement, then said Party shall

promptly and at its sole expense and sole option, but subject to the limitations of liability set forth below:

7.4.1 modify or replace the applicable facilities or equipment (including software) while maintaining form and function, or

7.4.2 obtain a license sufficient to allow such use to continue.

7.4.3 In the event Section 8.4.1 or 8.4.2 are commercially unreasonable, then said Party may, terminate, upon reasonable notice, this contract with respect to use of, or services provided through use of, the affected facilities or equipment (including software), but solely to the extent required to avoid the infringement claim. However, the termination of a particular service under this Section does not relieve the Party of its obligation to provide any service required under the Act, the regulations thereunder or by the Commission.

7.5 Exception to Obligations. Neither Party's obligations under this Section shall apply to the extent the infringement is caused by: (i) modification of the facilities or equipment (including software) by the indemnitee; (ii) use by the indemnitee of the facilities or equipment (including software) in combination with equipment or facilities (including software) not provided or authorized by the indemnitor, provided the facilities or equipment (including software) would not be infringing if used alone; (iii) conformance to specifications of the indemnitee which would necessarily result in infringement; or (iv) continued use by the indemnitee of the affected facilities or equipment (including software) after being placed on notice to discontinue use as set forth herein.

7.6 Exclusive Remedy. The foregoing shall constitute the Parties' sole and exclusive remedies and obligations with respect to a third party claim of intellectual property infringement arising out of the conduct of business under this Agreement.

7.7 Dispute Resolution. Any claim arising under this Section 8 shall be excluded from the dispute resolution procedures set forth in Section 10 and shall be brought in a court of competent jurisdiction.

## 8. Proprietary and Confidential Information

8.1 Proprietary and Confidential Information. It may be necessary for BellSouth and Comcast Phone, each as the "Discloser," to provide to the other Party, as "Recipient," certain proprietary and confidential information (including trade secret information) including but not limited to technical, financial, marketing, staffing and business plans and information, strategic information, proposals, request for proposals, specifications, drawings, maps, prices, costs, costing methodologies, procedures, processes, business systems, software programs, techniques, customer account data, call detail records and like information (collectively the "Information"). All such Information conveyed in writing or other tangible form shall be conspicuously marked with a confidential or proprietary legend. Information conveyed orally by the Discloser to Recipient shall be designated as

proprietary and confidential at the time of such oral conveyance, shall be reduced to writing by the Discloser within forty-five (45) days thereafter, and shall be conspicuously marked with a confidential or proprietary legend.

8.2 Use and Protection of Information. Recipient agrees to protect such Information of the Discloser provided to Recipient from whatever source from distribution, disclosure or dissemination to anyone except employees of Recipient with a need to know such Information solely in conjunction with Recipient's analysis of the Information and for no other purpose except as authorized herein or as otherwise authorized in writing by the Discloser. Recipient will not make any copies of the Information inspected by it.

8.3 Exceptions. Recipient will not have an obligation to protect any portion of the Information which:

8.3.1 (a) is made publicly available by the Discloser or lawfully by a nonparty to this Agreement; (b) is lawfully obtained by Recipient from any source other than Discloser; (c) is previously known to Recipient without an obligation to keep it confidential; or (d) is released from the terms of this Agreement by Discloser upon written notice to Recipient.

8.4 Recipient agrees to use the Information solely for the purposes of negotiations pursuant to 47 U.S.C. 251 or in performing its obligations under this Agreement and for no other entity or purpose, except as may be otherwise agreed to in writing by the Parties. Nothing herein shall prohibit Recipient from providing information requested by the FCC or a state regulatory agency with jurisdiction over this matter, or to support a request for arbitration or an allegation of failure to negotiate in good faith, or where required by law, regulation, court order or otherwise legally compelled (e.g., by the FCC or a Commission) provided that Recipient provides Discloser with prompt notice of such requirement and cooperates in good faith in ensuring proper confidential protection for such disclosure.

8.5 Recipient agrees not to publish or use the Information for any advertising, sales promotions, press releases, or publicity matters that refer either directly or indirectly to the Information or to the Discloser or any of its affiliated companies.

8.6 The disclosure of Information neither grants nor implies any license to the Recipient under any trademark, patent, copyright, or application that is now or may hereafter be owned by the Discloser.

8.7 Survival of Confidentiality Obligations. The Parties' rights and obligations under this Section 8 shall survive and continue in effect until two (2) years after the expiration or termination date of this Agreement with regard to all Information exchanged during the term of this Agreement. Thereafter, the Parties' rights and obligations hereunder survive and continue in effect with respect to any Information that is a trade secret under applicable law.

**9. Resolution of Disputes**

Except as otherwise stated in this Agreement, if any dispute arises as to the interpretation of any provision of this Agreement or as to the proper implementation of this Agreement, the aggrieved Party shall petition the Commission for a resolution of the dispute. However, each Party reserves any rights it may have to seek judicial review of any ruling made by the Commission concerning this Agreement.

**10. Taxes**

10.1 Definition. For purposes of this Section, the terms "taxes" and "fees" shall include but not be limited to federal, state or local sales, use, excise, gross receipts or other taxes or tax-like fees of whatever nature and however designated (including tariff surcharges and any fees, charges or other payments, contractual or otherwise, for the use of public streets or rights of way, whether designated as franchise fees or otherwise) imposed, or sought to be imposed, on or with respect to the services furnished hereunder or measured by the charges or payments therefore, excluding (a) any taxes levied on either Party's corporate existence, status, or income, (b) any corporate franchise taxes or (c) tax on property.

10.2 Taxes and Fees Imposed Directly On Either Providing Party or Purchasing Party.

10.2.1 Taxes and fees imposed on the providing Party, which are not permitted or required to be passed on by the providing Party to its customer, shall be borne and paid by the providing Party.

10.2.2 Taxes and fees imposed on the purchasing Party, which are not required to be collected and/or remitted by the providing Party, shall be borne and paid by the purchasing Party.

10.3 Taxes and Fees Imposed on Purchasing Party But Collected And Remitted By Providing Party.

10.3.1 Taxes and fees imposed on the purchasing Party shall be borne by the purchasing Party, even if the obligation to collect and/or remit such taxes or fees is placed on the providing Party.

10.3.2 To the extent permitted by applicable law, any such taxes and/or fees shall be shown as separate items on applicable billing documents between the Parties. Notwithstanding the foregoing, the purchasing Party shall remain liable for and the providing Party may collect any such taxes and fees, which were assessed by or paid to an appropriate taxing authority within the statute of limitations period regardless of whether they are actually billed by the providing Party at the time that the respective service is billed. If the providing Party fails to bill or to collect any taxes or fees herein, then as between the providing Party and purchasing Party, the providing Party shall be liable for any penalty assessed with respect to such uncollected taxes or fees by such authority.

10.3.3 If the purchasing Party determines that in its opinion any such taxes or fees are not payable, the providing Party shall not bill such taxes or fees to the purchasing Party if the purchasing Party provides written certification, reasonably satisfactory to the providing Party, stating that it is exempt or otherwise not subject to the tax or fee, setting forth the basis therefore, and satisfying any other requirements under applicable law. To the extent a sale is claimed to be for resale and thus subject to tax exemption, the purchasing Party shall furnish the providing Party a proper resale tax exemption certificate as authorized or required by statute or regulation of the jurisdiction providing said resale tax exemption. Failure to timely provide said resale tax exemption certificate will result in no exemption being available to the purchasing Party for any period prior to the date that the purchasing Party presents a valid certificate. If applicable law excludes or exempts a purchase of services under this Agreement from a Tax, but does not also provide an exemption procedure, then the providing Party will not collect such Tax if the purchasing Party furnishes the providing Party with a letter signed by an authorized representative of the purchasing Party claiming an exemption and identifying the applicable law that both allows such exemption and does not require an exemption certificate. If any authority seeks to collect any such tax or fee that the purchasing Party has determined and certified not to be payable, or any such tax or fee that was not billed by the providing Party, the purchasing Party may contest the same in good faith, at its own expense. In any such contest, the purchasing Party shall promptly furnish the providing Party with copies of all filings in any proceeding, protest, or legal challenge, all rulings issued in connection therewith, and all correspondence between the purchasing Party and the taxing authority.

10.3.4 In the event that all or any portion of an amount sought to be collected must be paid in order to contest the imposition of any such tax or fee, or to avoid the existence of a lien on the assets of the providing Party during the pendency of such contest, the purchasing Party shall be responsible for such payment and shall be entitled to the benefit of any refund or recovery plus any interest thereon.

10.3.5 If it is ultimately determined that any additional amount of such a tax or fee is due to the imposing authority, the purchasing Party shall pay such additional amount, including any interest and penalties thereon.

10.3.6 Notwithstanding any provision to the contrary, the purchasing Party shall protect, indemnify and hold harmless (and defend at the purchasing Party's expense) the providing Party from and against any such tax or fee, interest or penalties thereon, or other charges or payable expenses (including reasonable attorney fees) with respect thereto, which are incurred by the providing Party in connection with any claim for or contest of any such tax or fee except to the extent any interest, penalty or other charges or expenses are due to the negligent acts or willful misconduct of providing Party.

10.3.7 Each Party shall notify the other Party in writing of any assessment, proposed assessment or other claim for any additional amount of such a tax or fee by a taxing authority; such notice to be provided, if possible, at least ten (10) days prior

to the date by which a response, protest or other appeal must be filed, but in no event later than thirty (30) days after receipt of such assessment, proposed assessment or claim.

10.4 Taxes and Fees Imposed on Providing Party But Passed On To Purchasing Party.

10.4.1 Taxes and fees imposed on the providing Party, which are permitted or required to be passed on by the providing Party to its customer, shall be borne by the purchasing Party.

10.4.2 To the extent permitted by applicable law, any such taxes and/or fees shall be shown as separate items on applicable billing documents between the Parties. Notwithstanding the foregoing, the purchasing Party shall remain liable for any such taxes and fees regardless of whether they are actually billed by the providing Party at the time that the respective service is billed. If the providing Party fails to bill or to collect any taxes or fees herein, then as between the providing Party and purchasing Party, the providing Party shall be liable for any penalty assessed with respect to such uncollected taxes or fees by such authority.

10.4.3 If the purchasing Party disagrees with the providing Party's determination as to the application or basis for any such tax or fee, the Parties shall consult with respect to the imposition and billing of such tax or fee. Notwithstanding the foregoing, the providing Party shall retain ultimate responsibility for determining whether and to what extent any such taxes or fees are applicable, and the purchasing Party shall abide by such determination and pay such taxes or fees to the providing Party. The providing Party shall further retain ultimate responsibility for determining whether and how to contest the imposition of such taxes and fees; provided, however, that any such contest undertaken at the request of the purchasing Party shall be at the purchasing Party's expense.

10.4.4 In the event that all or any portion of an amount sought to be collected must be paid in order to contest the imposition of any such tax or fee, or to avoid the existence of a lien on the assets of the providing Party during the pendency of such contest, the purchasing Party shall be responsible for such payment and shall be entitled to the benefit of any refund or recovery and any interest thereon.

10.4.5 If it is ultimately determined that any additional amount of such a tax or fee is due to the imposing authority, the purchasing Party shall pay such additional amount, including any interest and penalties thereon.

10.4.6 Notwithstanding any provision to the contrary, the purchasing Party shall protect, indemnify and hold harmless (and defend at the purchasing Party's expense) the providing Party from and against any such tax or fee, interest or penalties thereon, or other reasonable charges or payable expenses (including reasonable attorneys' fees) with respect thereto, which are incurred by the providing Party in connection with any claim for or contest of any such tax or fee, except to the extent any

interest, penalty or other charges or expenses are due to the negligent acts or willful misconduct of providing Party.

10.4.7 Each Party shall notify the other Party in writing of any assessment, proposed assessment or other claim for any additional amount of such a tax or fee by a taxing authority; such notice to be provided, if possible, at least ten (10) days prior to the date by which a response, protest or other appeal must be filed, but in no event later than thirty (30) days after receipt of such assessment, proposed assessment or claim.

10.5 Mutual Cooperation. In any contest of a tax or fee by one Party, the other Party shall cooperate fully by providing records, testimony and such additional information or assistance as may reasonably be necessary to pursue the contest. Further, the other Party shall be reimbursed for any reasonable and necessary out-of-pocket copying and travel expenses incurred in assisting in such contest.

**11. Force Majeure**

In the event performance of this Agreement, or any obligation hereunder, is either directly or indirectly prevented, restricted, or interfered with by reason of fire, flood, earthquake or like acts of God, wars, revolution, civil commotion, explosion, acts of public enemy, embargo, acts of the government in its sovereign capacity, labor difficulties, including without limitation, strikes, slowdowns, picketing, or boycotts, unavailability of equipment from vendor, changes requested by Customer, or any other circumstances beyond the reasonable control and without the fault or negligence of the Party affected, the Party affected, upon giving prompt written notice to the other Party, shall be excused from such performance on a day-to-day basis to the extent of such prevention, restriction, or interference (and the other Party shall likewise be excused from performance of its obligations on a day-to-day basis until the delay, restriction or interference has ceased); provided however, that the Party so affected shall use diligent efforts to avoid or remove such causes of non-performance and both Parties shall proceed whenever such causes are removed or cease.

**12. Adoption of Agreements**

Pursuant to 47 USC § 252(i) and 47 C.F.R. § 51.809, BellSouth shall make available to Comcast Phone any entire interconnection agreement filed and approved pursuant to 47 USC § 252.

The term of the adopted agreement shall expire on the same date as set forth in the agreement that was adopted. In accordance with this section, Comcast Phone shall provide its request to adopt an interconnection agreement in its entirety by providing BellSouth written notice of its intent to adopt said interconnection agreement. Such agreement will not be effective until executed by both Parties.

**13. Modification of Agreement**

13.1 If either Party changes its name or makes changes to its company structure or identity due to a merger, acquisition, transfer or any other reason, it is the responsibility of such Party to notify the other Party of said change and request that an amendment to this Agreement, if necessary, be executed to reflect said change. Upon such notification, and subject to the provisions of Section 19, the other Party agrees to cooperate in good faith and with due diligence to amend this Agreement as appropriate and to take all reasonable steps necessary to effectuate the name change.

13.2 No modification, amendment, supplement to, or waiver of the Agreement or any of its provisions shall be effective and binding upon the Parties unless it is made in writing and duly signed by the Parties.

13.3 In the event that any effective legislative, regulatory, judicial or other legal action materially affects any material terms of this Agreement, or the ability of Comcast Phone or BellSouth to perform any material terms of this Agreement, Comcast Phone or BellSouth may, on thirty (30) days' written notice require that such terms be renegotiated, and the Parties shall renegotiate in good faith such mutually acceptable new terms as may be required. In the event that such new terms are not renegotiated within ninety (90) days after such notice, the Dispute shall be referred to the Dispute Resolution procedure set forth in this Agreement. Further, either Party may provide written request to the other Party to amend the Agreement as may be required from time to time to accommodate business and operational needs and as otherwise provided in the Agreement.

**14. Non-waiver of Legal Rights**

Execution of this Agreement by either Party does not confirm or imply that the executing Party agrees with any decision(s) issued pursuant to the Telecommunications Act of 1996 and the consequences of those decisions on specific language in this Agreement. Neither Party waives its rights to appeal or otherwise challenge any such decision(s) and each Party reserves all of its rights to pursue any and all legal and/or equitable remedies, including appeals of any such decision(s).

**15. Indivisibility**

The Parties intend that this Agreement be indivisible and nonseverable, and each of the Parties acknowledges that it has assented to all of the covenants and promises in this Agreement as a single whole and that all of such covenants and promises, taken as a whole, constitute the essence of the contract. Without limiting the generality of the foregoing, each of the Parties acknowledges that any provision by BellSouth of Collocation Space (or space pursuant to Adjacent Arrangement) under this Agreement is solely for the purpose of facilitating the provision of other services under this Agreement and that neither Party would have contracted with respect to the provisioning of Collocation Space (or space pursuant to Adjacent Arrangement) if the covenants and promises of the other Party with respect to the

other services provided for under this Agreement had not been made. The Parties further acknowledge that this Agreement is intended to constitute a single transaction, that the obligations of the Parties under this Agreement are interdependent, and that payment obligations under this Agreement are intended to be recoupable against other payment obligations under this Agreement.

**16. Waivers**

A failure or delay of either Party to enforce any of the provisions hereof, to exercise any option which is herein provided, or to require performance of any of the provisions hereof shall in no way be construed to be a waiver of such provisions or options, and each Party, notwithstanding such failure, shall have the right thereafter to insist upon the performance of any and all of the provisions of this Agreement.

**17. Governing Law**

17.1 Where applicable, this Agreement shall be governed by and construed in accordance with federal and state substantive telecommunications law, including rules and regulations of the FCC and appropriate Commission. In all other respects, this Agreement shall be governed by and construed and enforced in accordance with the laws of the State of Georgia without regard to its conflict of laws principles.

**18 Assignments and Transfers**

18.1 Any assignment by either Party to any entity of any right, obligation or duty, or of any other interest hereunder, in whole or in part, without the prior written consent of the other Party shall be void, and such consent shall not be unreasonably withheld or denied. In all cases, the assigning Party shall notify the other Party in writing of such assignment at least thirty (30) days prior to the effective date thereof. A Party may assign this Agreement in whole to an Affiliate of the Party or any entity succeeding a Party by sale, merger, or acquisition without the consent of the other Party; provided, however, that the assignee is authorized as a CLEC in all States covered by this Agreement and complies with the rest of the provisions in this Agreement. Upon BellSouth's request the assignee must provide evidence of a Commission approved certification to provide Telecommunications Service in each state that Comcast Phone is entitled to provide Telecommunications Service. Upon BellSouth's request, the Parties shall amend this Agreement to reflect such assignments and shall work cooperatively to implement any changes required due to such assignment. No assignment shall be effective until the foregoing provisions in this section are met and completed. All obligations and duties of any Party under this Agreement shall be binding on all successors in interest and assigns of such Party. No assignment or delegation hereof shall relieve the assignor of its obligations under this Agreement in the event that the assignee fails to perform such obligations. Notwithstanding anything to the contrary in this Section,

Comcast Phone shall not be permitted to assign this Agreement in whole or in part to any entity unless either (1) Comcast Phone pays all bills, past due and current, under this Agreement, or (2) Comcast Phone's assignee expressly assumes liability for payment of such bills.

**19. Notices**

19.1 Every notice, consent, approval, or other communications required or contemplated by this Agreement shall be in writing and shall be delivered by hand, by overnight courier or by US mail postage prepaid, address to:

**BellSouth Telecommunications, Inc.**

Account Team
600 North 19th Street
Birmingham, Alabama 35203

and

General Attorney - COU
Suite 4300
675 W. Peachtree St.
Atlanta, GA 30375

**Comcast Phone II, Inc. Comcast Phone, LLC**

John G Sullivan, Vice President
Chief Counsel Telephony
1500 Market Street
Philadelphia, PA 19102
Telephone: 215-320-8816
E-Mail: john_Sullivan@comcast.com

With a copy to:

Beth Choroser, Senior Director of Regulatory Compliance
1500 Market Street
Philadelphia, PA 19102
Telephone: 215-981-7893
E-Mail: beth_choroser@comcast.com

or at such other address as the intended recipient previously shall have designated by written notice to the other Party.

19.2 Unless otherwise provided in this Agreement, notice by mail shall be effective on the date it is actually received as may be evidenced by a return receipt or equivalent and notice by recognized overnight delivery service is effective when

received as evidence by a signed delivery receipt, or if rejected by the recipient Party, notice shall be presumed received on the date of rejection.

20 BellSouth will post changes to business processes and policies, not requiring an amendment o this Agreement, notices required to be posted to BellSouth's website, and any other information of general applicability to CLECs.

21 Rule of Construction

No rule of construction requiring interpretation against the drafting Party hereof shall apply in the interpretation of this Agreement.

**22. Headings of No Force or Effect**

The headings of Articles and Sections of this Agreement are for convenience of reference only, and shall in no way define, modify or restrict the meaning or interpretation of the terms or provisions of this Agreement.

**23. Multiple Counterparts**

This Agreement may be executed in multiple counterparts, each of which shall be deemed an original, but all of which shall together constitute but one and the same document.

**24. Filing of Agreement**

Upon execution of this Agreement it shall be filed with the appropriate state regulatory agency pursuant to the requirements of Section 252 of the Act, and the Parties shall share equally any filing fees therefore. If the regulatory agency imposes any filing or public interest notice fees regarding the filing or approval of the Agreement, the required notice and the publication and/or notice costs shall be borne by equally by the Parties. Notwithstanding the foregoing, this Agreement shall not be submitted for approval by the appropriate state regulatory agency unless and until such time as Comcast Phone is duly certified as a local exchange carrier in such state, except as otherwise required by a Commission.

**25. Compliance with Applicable Law**

This agreement is intended to memorialize the Parties' mutual agreement with respect to each Party's rights and obligations under this Agreement. Each Party shall comply at its own expense with applicable law.

**26. Necessary Approvals**

Each Party shall be responsible for obtaining and keeping in effect all approvals from, and rights granted by, governmental authorities, building and property owners, other carriers, and any other persons that may be required in connection with the performance of its obligations under this Agreement. Each Party shall

reasonably cooperate with the other Party in obtaining and maintaining any required approvals and rights for which such Party is responsible.

**27. Good Faith Performance**

Each Party shall act in good faith in its performance under this Agreement and, in each case in which a Party's consent or agreement is required or requested hereunder, such Party shall not unreasonably condition withhold or delay such consent or agreement.

**28. Rates**

28.1 Comcast Phone shall pay the charges set forth in this Agreement. In the event that BellSouth is unable to bill the applicable rate or no rate is established or included in this Agreement such charges incurred under this Agreement, including back billing and billing disputes, are subject to a one (1) year limitations period. However, both Parties recognize that situations exist which may necessitate billing beyond one (1) year and to the extent not bound by the applicable limitations period. These exceptions are:

- Charges connected with jointly provided services whereby meet point billing guidelines require either party to rely on records provided by a third party and such records have not been provided in a timely manner;
- Charges incorrectly billed due to erroneous information supplied by the non-billing Party**.**

28.1.1 To the extent Comcast Phone requests services not included in this Agreement, such services shall be provisioned pursuant to the rates, terms and conditions set forth in the applicable tariffs, or a separately negotiated Agreement.

**29. Rate True-Up**

29.1 This section applies to Network Interconnection and/or Unbundled Network Elements and other services rates that are expressly subject to true-up under this Agreement. Notwithstanding the foregoing, no charges shall be applied retroactively prior to the effective date of this Agreement.

29.2 The designated true-up rates shall be trued-up, either up or down, based on final prices determined either by further agreement between the Parties, or by a final order (including any appeals) of the Commission. The Parties shall implement the true-up by comparing the actual volumes and demand for each item, together with the designated true-up rates for each item, with the final prices determined for each item. Each Party shall keep its own records upon which the true-up can be based, and any final payment from one Party to the other shall be in an amount agreed upon by the Parties based on such records. In the event of any disagreement as between the records or the Parties regarding the amount of such true-up, the Parties shall submit the matter to the Dispute Resolution process in accordance with the provisions of this Agreement.

29.3 Where a final and an effective order of a Commission requires a true-up, such as a generic cost proceeding, the order that forms the basis of the true-up shall be binding upon BellSouth and Comcast Phone specifically or upon all carriers generally.

**30. Nonexclusive Dealings**

This Agreement does not prevent either Party from providing or purchasing services to or from any other person nor, except as provided in Section 252(i) of the Act, nor does it obligate either Party to provide or purchase any services (except insofar as BellSouth may be obligated to provide access to Interconnection, services and Network Elements to Comcast Phone as a requesting carrier under the Act).

**31. Survival**

The Parties' obligations under this Agreement, which by their nature are intended to continue beyond the termination or expiration of this Agreement, shall survive the termination or expiration of this Agreement.

**32. Entire Agreement**

32.1 This Agreement and its Attachments sets forth the entire understanding and supersedes prior agreements between the Parties relating to the subject matter contained in this Agreement and merges all prior discussions between them. Any orders placed under prior agreements between the Parties shall be governed by the terms of such prior agreements. Neither Party shall be bound by any definition, condition, provision, representation, warranty, covenant or promise other than as expressly stated in this Agreement or as is contemporaneously or subsequently set forth in writing and executed by a duly authorized officer or representative of the Party to be bound thereby.

32.2 This Agreement includes Attachments with provisions for the following:

Resale
Network Elements and other services
Network Interconnection
Collocation
Access to Numbers and Number Portability
Pre-Ordering, Ordering and Provisioning, Maintenance and Repair
Billing and Billing Accuracy Certification
Rights-of-Way, Conduits and Pole Attachments
Performance Measurements
BellSouth Disaster Recovery Plan
Bona Fide Request/New Business Request Process

32.3 The following services are included as options for purchase by Comcast Phone pursuant to the terms and conditions set forth in this Agreement. Comcast Phone may elect to purchase said services by written request to its Local Contract Manager if applicable:

Optional Daily Usage File (ODUF)
Enhanced Optional Daily Usage File (EODUF)

## 34 Compliance with Law

The Parties have negotiated their respective rights and obligations pursuant to substantive Federal and State Telecommunications law and this Agreement is intended to memorialize the Parties' mutual agreement with respect to each Party's rights and obligations under the Act and applicable FCC and Commission orders, rules and regulations. Nothing contained herein, nor any reference to applicable rules and orders, is intended to expand on or contract the Parties' rights and obligations as set forth herein. To the extent the provisions of this Agreement differ from the provisions of any Federal or State Telecommunications statute, rule or order, this Agreement shall control. Each Party shall comply at its own expense with all other laws of general applicability.

**EXHIBIT C**

## SCHEDULE OF COMCAST PHONE, LLC (COMCAST PHONE)

## OPERATING AFFILIATES

**Comcast Phone of Florida, LLC d/b/a Comcast Digital Phone**

**Comcast Phone of Georgia, LLC**

**Comcast Phone of Kentucky, LLC d/b/a Comcast Digital Phone**

## SCHEDULE OF COMCAST PHONE II, Inc. (COMCAST PHONE)

## OPERATING AFFILIATES

**Comcast Phone of Alabama, LLC d/b/a Comcast Digital Phone**

**Comcast Phone of Louisiana, LLC**

**Comcast Phone of Mississippi, LLC**

**Comcast Phone of North Carolina, LLC**

**Comcast Phone of South Carolina, Inc**

**Comcast Phone of Tennessee, LLC**

IN WITNESS WHEREOF, the Parties have executed this Agreement the day and year written below.

**BellSouth Telecommunications, Inc.**

By: Kristen E Rowe

Name: Kristen E. Rowe

Title: Director

Date: 8/26/05

**Comcast Phone II, Inc. Comcast Phone, LLC**

By: Catherine Avgiris

Name: CATHERINE AVGIRIS

Title: SVP & GM. Comcast Voice Svcs

Date: 8/25/05

# Attachment 1

# Resale

## Table of Contents

**1. Discount Rates ..... 3**

**2. Definition of Terms ..... 3**

**3. General Provisions ..... 4**

**4. BellSouth's Provision of Services to Comcast Phone ..... 8**

**5. Maintenance of Services ..... 9**

**6. Establishment of Service ..... 10**

**7. Discontinuance of Service ..... 10**

**8 White Pages Listings ..... 11**

**9. Operator Services (Operator Call Processing and Directory Assistance) ..... 13**

**10 Branding for Wholesale Operator Call Processing and Directory Assistance ..... 14**

**11. Line Information Database (LIDB) ..... 15**

**12. RAO Hosting ..... 16**

**13. Optional Daily Usage File (ODUF) ..... 16**

**14. Enhanced Optional Daily Usage File (EODUF) ..... 16**

**Resale Restrictions ..... Exhibit A**

**Optional Daily Usage File (ODUF) ..... Exhibit B**

**Enhanced Option Daily Usage File (EODUF) ..... Exhibit C**

**Resale Discounts and Rates ..... Exhibit D**

# RESALE

## 1. Discount Rates

1.1 The discount rates applied to Comcast Phone purchases of BellSouth Telecommunications Services for the purpose of resale shall be as set forth in Exhibit D. Such discounts have been determined by the applicable Commission to reflect the costs avoided by BellSouth when selling a service for wholesale purposes.

1.2 The telecommunications services available for purchase by Comcast Phone for the purposes of resale to Comcast Phone's End Users shall be available at BellSouth's tariffed rates less the discount set forth in Exhibit D to this Agreement and subject to the exclusions and limitations set forth in Exhibit A to this Agreement.

## 2. Definition of Terms

2.1 COMPETITIVE LOCAL EXCHANGE COMPANY (CLEC) means a telephone company certificated by the Commission to provide local exchange service within BellSouth's franchised area.

2.2 CUSTOMER OF RECORD means the entity responsible for placing application for service; requesting additions, rearrangements, maintenance or discontinuance of service; payment in full of charges incurred such as non-recurring, monthly recurring, toll, directory assistance, etc.

2.3 DEPOSIT means assurance provided by a customer in the form of cash, surety bond or bank letter of credit to be held by BellSouth.

2.4 END USER means the ultimate user of the Telecommunications Service.

2.5 END USER CUSTOMER LOCATION means the physical location of the premises where an End User makes use of the telecommunications services.

2.6 NEW SERVICES means functions, features or capabilities that are not currently offered by BellSouth. This includes packaging of existing services or combining a new function, feature or capability with an existing service.

2.7 RESALE means an activity wherein a certificated CLEC, such as Comcast Phone, subscribes to the telecommunications services of BellSouth and then offers those telecommunications services to the public.

**3. General Provisions**

3.1 All of the negotiated rates, terms and conditions set forth in this Attachment pertain to the resale of BellSouth's retail telecommunications services and other services specified in this Attachment. Subject to effective and applicable FCC and Commission rules and orders, BellSouth shall make available to Comcast Phone for resale those telecommunications services BellSouth makes available, pursuant to its General Subscriber Services Tariff and Private Line Services Tariff, to customers who are not telecommunications carriers.

3.1.1 When Comcast Phone provides Resale service in a cross boundary area (areas that are part of the local serving area of another state's exchange) the rates, regulations and discounts for the tariffing state will apply. Billing will be from the serving state.

3.1.2 In Tennessee, if Comcast Phone does not resell Lifeline service to any End Users, and if Comcast Phone agrees to order an appropriate Operator Services/Directory Assistance block as set forth in BellSouth's General Subscriber Services Tariff, the discount shall be 21.56%.

3.1.2.1 In the event Comcast Phone resells Lifeline service to any End User in Tennessee, BellSouth will begin applying the 16% discount rate to all services. Upon Comcast Phone and BellSouth's implementation of a billing arrangement whereby a separate Master Account (Q-account) associated with a separate Operating Customer Number (OCN) is established for billing of Lifeline service End Users, the discount shall be applied as set forth in 3.1.2 preceding for the non-Lifeline affected Master Account (Q-account).

3.1.2.2 Comcast Phone must provide written notification to BellSouth within 30 days prior to either providing its own operator services/ directory services or orders the appropriate operator services/directory assistance blocking, to qualify for the higher discount rate of 21.56%.

3.2 Comcast Phone may purchase resale services from BellSouth for its own use in operating its business. The resale discount will apply to those services under the following conditions:

3.2.1 Comcast Phone must resell services to other End Users.

3.2.2 Comcast Phone cannot be a competitive local exchange telecommunications company for the single purpose of selling to itself.

3.3 Comcast Phone will be the customer of record for all services purchased from BellSouth. Except as specified herein, BellSouth will take orders from, bill and receive payment from Comcast Phone for said services.

3.4 Comcast Phone will be BellSouth's single point of contact for all services purchased pursuant to this Agreement. BellSouth shall have no contact with the End User except to the extent provided for herein. Each Party shall provide to the other a nation wide (50 states) toll-free contact number for purposes of repair and maintenance.

3.5 BellSouth will continue to bill the End User for any services that the End User specifies it wishes to receive directly from BellSouth. BellSouth maintains the right to serve directly any End User within the service area of Comcast Phone. BellSouth will continue to market directly its own telecommunications products and services and in doing so may establish independent relationships with End Users of Comcast Phone. Neither Party shall interfere with the right of any person or entity to obtain service directly from the other Party.

3.5.1 When an End User of Comcast Phone or BellSouth elects to change his/her carrier to the other Party, both Parties agree to release the End User's service to the other Party concurrent with the due date of the service order, which shall be established based on the standard interval for the End User's requested service as set forth in the BellSouth Product and Services Interval Guide.

3.5.2 BellSouth and Comcast Phone will refrain from contacting an End User who has placed or whose selected carrier has placed on the End User's behalf an order to change the End User's service provider from BellSouth or Comcast Phone to the other Party until such time that the order for service has been completed.

3.6 Current telephone numbers may normally be retained by the End User and are assigned to the service furnished. However, neither Party nor the End User has a property right to the telephone number or any other call number designation associated with services furnished by BellSouth, and no right to the continuance of service through any particular central office. BellSouth reserves the right to change such numbers, or the central office designation associated with such numbers, or both, whenever BellSouth deems it necessary to do so in the conduct of its business and in accordance with BellSouth practices and procedures on a nondiscriminatory basis.

3.7 Where BellSouth provides resold services to Comcast Phone, BellSouth will provide Comcast Phone with on-line access to intermediate telephone numbers as defined by applicable FCC rules and regulations on a first come first served basis. Comcast Phone acknowledges that such access to numbers shall be in accordance with the appropriate FCC rules and regulations. Comcast Phone acknowledges that there may be instances where there is a shortage of telephone numbers in a particular Common Language Location Identifier Code (CLLIC); and in such instances, Comcast Phone shall return unused intermediate telephone numbers to BellSouth upon BellSouth's request. BellSouth shall make all such requests on a nondiscriminatory basis.

3.8 BellSouth will allow Comcast Phone to designate up to 100 intermediate telephone numbers per CLLIC, for Comcast Phone's sole use. Assignment, reservation and use of telephone numbers shall be governed by applicable FCC rules and regulations. Comcast Phone acknowledges that there may be instances where there is a shortage of telephone numbers in a particular CLLIC and BellSouth has the right to limit access to blocks of intermediate telephone numbers. These instances include: 1) where jeopardy status has been declared by the North American Numbering Plan (NANP) for a particular Numbering Plan Area (NPA); or 2) where a rate center has less than six months supply of numbering resources.

3.9 Service is furnished subject to the condition that it will not be used for any unlawful purpose.

3.10 Service will be discontinued if any law enforcement agency advises that the service being used is in violation of the law.

3.11 BellSouth can refuse service when it has grounds to believe that service will be used in violation of the law.

3.12 BellSouth will cooperate with law enforcement agencies with subpoenas and court orders relating to Comcast Phone's End Users, pursuant to Section 6 of the General Terms and Conditions.

3.13 If Comcast Phone or its End Users utilize a BellSouth resold telecommunications service in a manner other than that for which the service was originally intended as described in BellSouth's retail tariffs, Comcast Phone has the responsibility to notify BellSouth. BellSouth will only provision and maintain said service consistent with the terms and conditions of the tariff describing said service.

3.14 Facilities and/or equipment utilized by BellSouth to provide service to Comcast Phone remain the property of BellSouth.

3.15 White page directory listings for Comcast Phone End Users will be provided in accordance with Section 8 below.

3.16 Service Ordering and Operations Support Systems (OSS)

3.16.1 Comcast Phone must order services through resale interfaces, i.e., the Local Carrier Service Center (LCSC) and/or appropriate Complex Resale Support Group (CRSG) pursuant to this Agreement. BellSouth has developed and made available the interactive interfaces by which Comcast Phone may submit a Local Service Request (LSR) electronically as set forth in Attachment 6 of this Agreement. Service orders will be in a standard format designated by BellSouth.

3.16.2 LSRs submitted by means of one of these interactive interfaces will incur an OSS electronic charge as set forth in Exhibit D of this Attachment. An individual LSR

will be identified for billing purposes by its Purchase Order Number (PON). LSRs submitted by means other than one of these interactive interfaces (Mail, fax, courier, etc.) will incur a manual order charge as set forth in Exhibit D of this Attachment. Supplements or clarifications to a previously billed LSR will not incur another OSS charge.

3.16.3 Denial/Restoral OSS Charge. In the event Comcast Phone provides a list of customers to be denied and restored, rather than an LSR, each location on the list will require a separate PON and therefore will be billed as one LSR per location.

3.16.4 Cancellation OSS Charge. Comcast Phone will incur an OSS charge for an accepted LSR that is later canceled.

3.17 Where available to BellSouth's End Users, BellSouth shall provide the following telecommunications services at a discount to allow for voice mail services**:**

- Message Waiting Indicator ("MWI"), stutter dialtone and message waiting light feature capabilities
- Call Forward Busy Line ("CF/B")
- Call Forward Don't Answer ("CF/DA")

Further, BellSouth messaging services set forth in BellSouth's Messaging Service Information Package shall be made available for resale without the wholesale discount.

3.18 BellSouth shall provide branding for, or shall unbrand, voice mail services for Comcast Phone per the Bona Fide Request/New Business Request process as set forth in Attachment 11 of this Agreement.

3.19 BellSouth's Inside Wire Maintenance Service Plan is available for resale at rates, terms and conditions as set forth by BellSouth and without the wholesale discount.

3.20 In the event Comcast Phone acquires an End User whose service is provided pursuant to a BellSouth Special Assembly, BellSouth shall make available to Comcast Phone that Special Assembly at the wholesale discount at Comcast Phone's option. Comcast Phone shall be responsible for all terms and conditions of such Special Assembly including but not limited to termination liability if applicable.

3.21 BellSouth shall provide 911/E911 for Comcast Phone customers in the same manner that it is provided to BellSouth customers. BellSouth shall provide and validate Comcast Phone customer information to the PSAP. BellSouth shall use its service order process to update and maintain, on the same schedule that it uses for its customers, the Comcast Phone customer service information in the

ALI/DMS (Automatic Location Identification/Location Information) databases used to support 911/E911 services.

3.22 BellSouth shall bill, and Comcast Phone shall pay, the End User line charge associated with implementing Number Portability as set forth in BellSouth's FCC No. 1 tariff. This charge is not subject to the wholesale discount.

3.23 Pursuant to 47 CFR Section 51.617, BellSouth shall bill to Comcast Phone, and Comcast Phone shall pay, the End User common line charges identical to the End User common line charges BellSouth bills its End Users.

**4. BellSouth's Provision of Services to Comcast Phone**

4.1 Resale of BellSouth services shall be as follows:

4.1.1 The resale of telecommunications services shall be limited to users and uses conforming to the class of service restrictions.

4.1.2 Hotel and Hospital PBX services are the only telecommunications services available for resale to Hotel/Motel and Hospital End Users, respectively. Similarly, Access Line Service for Customer Provided Coin Telephones is the only local service available for resale to Payphone Service Provider (PSP) customers. Shared Tenant Service customers can only be sold those local exchange access services available in BellSouth's A23 Shared Tenant Service Tariff in the states of Florida, Georgia, North Carolina and South Carolina, and in A27 in the states of Alabama, Kentucky, Louisiana, Mississippi and Tennessee.

4.1.3 BellSouth reserves the right to periodically audit services purchased by Comcast Phone to establish authenticity of use. Such audit shall not occur more than once in a calendar year. Comcast Phone shall make any and all records and data available to BellSouth or BellSouth's auditors on a reasonable basis. BellSouth shall bear the cost of said audit. Any information provided by Comcast Phone for purposes of such audit shall be deemed Confidential Information pursuant to the General Terms and Conditions of this Agreement.

4.2 Subject to Exhibit A hereto, resold services can only be used in the same manner as specified in BellSouth's Tariffs. Resold services are subject to the same terms and conditions as are specified for such services when furnished to an individual End User of BellSouth in the appropriate section of BellSouth's Tariffs. Specific tariff features (e.g. a usage allowance per month) shall not be aggregated across multiple resold services.

4.3 Comcast Phone may resell services only within the specific service area as defined in its certificate of operation approved by the Commission.

4.4 If Comcast Phone cancels an order for resold services, any costs incurred by BellSouth in conjunction with provisioning of such order will be recovered in accordance with BellSouth's General Subscriber Services Tariffs and Private Line Services Tariffs.

4.5 Service Jointly Provisioned with an Independent Company or Competitive Local Exchange Company Areas. BellSouth will in some instances provision resold services in accordance with the General Subscriber Services Tariff and Private Line Tariffs jointly with an Independent Company or other Competitive Local Exchange Carrier.

4.5.1 When Comcast Phone assumes responsibility for such service, all terms and conditions defined in the Tariff will apply for services provided within the BellSouth service area only.

4.5.2 Service terminating in an Independent Company or other Competitive Local Exchange Carrier area will be provisioned and billed by the Independent Company or other Competitive Local Exchange Carrier directly to Comcast Phone.

4.5.3 Comcast Phone must establish a billing arrangement with the Independent Company or other Competitive Local Exchange Carrier prior to assuming an End User account where such circumstances apply.

4.5.4 Specific guidelines regarding such services are available on the BellSouth Web site at http://www.interconnection.bellsouth.com.

**5. Maintenance of Services**

5.1 Services resold pursuant to this Attachment and BellSouth's General Subscriber Service Tariff and Private Line Service Tariff and facilities and equipment provided by BellSouth shall be maintained by BellSouth.

5.2 Comcast Phone or its End Users may not rearrange, move, disconnect, remove or attempt to repair any facilities owned by BellSouth except with the written consent of BellSouth.

5.3 Comcast Phone accepts responsibility to notify BellSouth of situations that arise that may result in a service problem.

5.4 Comcast Phone will contact the appropriate repair centers in accordance with procedures established by BellSouth.

5.5 For all repair requests, Comcast Phone shall adhere to BellSouth's prescreening guidelines prior to referring the trouble to BellSouth.

5.6 BellSouth will bill Comcast Phone for handling troubles that are found not to be in BellSouth's network pursuant to its standard time and material charges. The

standard time and material charges will be no more than what BellSouth charges to its retail customers for the same services.

5.7 BellSouth reserves the right to contact Comcast Phone's End Users, if deemed necessary, for maintenance purposes.

**6. Establishment of Service**

6.1 After receiving certification as a local exchange carrier from the applicable regulatory agency, Comcast Phone will provide the appropriate BellSouth Advisory team manager the necessary documentation to enable BellSouth to establish accounts for resold services ("master account"). Comcast Phone is required to provide the following before a master account is established: blanket letter of authorization, misdirected number form, proof of PSC/PUC certification, the Application for Master Account, an Operating Company Number ("OCN") assigned by the National Exchange Carriers Association ("NECA") and a deposit and tax exemption certificate, if applicable.

6.2 Comcast Phone shall provide to BellSouth a blanket letter of authorization ("LOA") certifying that Comcast Phone will have End User authorization prior to viewing the End User's customer service record or switching the End User's service. BellSouth will not require End User confirmation prior to establishing service for Comcast Phone's End User.

6.3 BellSouth will accept a request directly from the End User for conversion of the End User's service from Comcast Phone to BellSouth or will accept a request from another CLEC for conversion of the End User's service from Comcast Phone to such other CLEC. Upon completion of the conversion BellSouth will notify Comcast Phone that such conversion has been completed.

**7. Discontinuance of Service**

7.1 The procedures for discontinuing service to an End User are as follows:

7.1.1 BellSouth will deny service to Comcast Phone's End User on behalf of, and at the request of, Comcast Phone. Upon restoration of the End User's service, restoral charges will apply and will be the responsibility of Comcast Phone.

7.1.2 At the request of Comcast Phone, BellSouth will disconnect a Comcast Phone End User.

7.1.3 All requests by Comcast Phone for denial or disconnection of an End User for nonpayment must be in writing.

7.1.4 Comcast Phone will be made solely responsible for notifying the End User of the proposed disconnection of the service.

7.1.5 BellSouth will continue to process calls made to the Annoyance Call Center and will advise Comcast Phone when it is determined that annoyance calls are originated from one of its End User's locations. BellSouth shall be indemnified, defended and held harmless by Comcast Phone and/or the End User against any claim, loss or damage arising from providing this information to Comcast Phone. It is the responsibility of Comcast Phone to take the corrective action necessary with its End Users who make annoying calls. (Failure to do so will result in BellSouth's disconnecting the End User's service.)

**8 White Pages Listings**

8.1 BellSouth shall provide Comcast Phone and its End Users access to white pages directory listings under the following terms:

8.1.2 Listings. Comcast Phone shall provide all new, changed and deleted listings on a timely basis and BellSouth or its agent will include Comcast Phone residential and business End User listings in the appropriate White Pages (residential and business) or alphabetical directories in the geographic areas covered by this Agreement. Directory listings will make no distinction between Comcast Phone and BellSouth End Users. Comcast Phone shall provide listing information in accordance with the procedures set forth in The BellSouth Business Rules for Local Ordering found at BellSouth's Interconnection Services Web site.

8.1.3 Unlisted/Non-Published End Users. Comcast Phone will be required to provide to BellSouth the names, addresses and telephone numbers of all Comcast Phone End Users who wish to be omitted from directories. Unlisted/Non-Published listings will be subject to the rates as set forth in BellSouth's General Subscriber Services Tariff (GSST) and shall not be subject to wholesale discount.

8.1.4 Inclusion of Comcast Phone End Users in Directory Assistance Database. BellSouth will include and maintain Comcast Phone End User listings in BellSouth's Directory Assistance databases. Comcast Phone shall provide such Directory Assistance listings to BellSouth at no charge.

8.1.5 Listing Information Confidentiality. BellSouth will afford Comcast Phone's directory listing information the same level of confidentiality that BellSouth affords its own directory listing information.

8.1.6 Additional and Designer Listings. Additional and designer listings will be offered by BellSouth at tariffed rates as set forth in the GSST and shall not be subject to the wholesale discount.

8.1.7 Rates. So long as Comcast Phone provides listing information to BellSouth as set forth in Section 8.1.2 above, BellSouth shall provide to Comcast Phone one (1) basic White Pages directory listing per Comcast Phone End User at no charge other than applicable service order charges as set forth in BellSouth's tariffs.

Except in the case of a local service request (LSR) submitted solely to port a number from BellSouth, if such listing is requested on the initial LSR associated with the request for services, a single manual service order charge or electronic service order charge, as appropriate, as described in Attachment 6 of this Agreement, will apply to both the request for service and the request for the directory listing. Where a subsequent LSR is placed solely to request a directory listing, or is placed to port a number and request a directory listing, separate service order charges as set forth in BellSouth's tariffs shall apply, as well as the manual service order charge or the electronic service order charge, as appropriate, as described in Attachment 6 of this Agreement.

8.2 Directories. BellSouth or its agent shall make available White Pages directories to Comcast Phone End User at no charge or as specified in a separate agreement between Comcast Phone and BellSouth's agent.

8.3 Procedures for submitting Comcast Phone Subscriber Listing Information (SLI) are found in The BellSouth Business Rules for Local Ordering found at BellSouth's Interconnection Services Web site.

8.3.1 Comcast Phone authorizes BellSouth to release all Comcast Phone SLI provided to BellSouth by Comcast Phone to qualifying third parties pursuant to either a license agreement or BellSouth's Directory Publishers Database Service (DPDS), General Subscriber Services Tariff (GSST), as the same may be amended from time to time. Such Comcast Phone SLI shall be intermingled with BellSouth's own End User listings and listings of any other CLEC that has authorized a similar release of SLI.

8.3.2 No compensation shall be paid to Comcast Phone for BellSouth's receipt of Comcast Phone SLI, or for the subsequent release to third parties of such SLI. In addition, to the extent BellSouth incurs costs to modify its systems to enable the release of Comcast Phone's SLI, or costs on an ongoing basis to administer the release of Comcast Phone SLI, Comcast Phone shall pay to BellSouth its proportionate share of the reasonable costs associated therewith. At any time that costs may be incurred to administer the release of Comcast Phone's SLI, Comcast Phone will be notified. If Comcast Phone does not wish to pay its proportionate share of these reasonable costs, Comcast Phone may instruct BellSouth that it does not wish to release its SLI to independent publishers, and Comcast Phone shall amend this Agreement accordingly. Comcast Phone will be liable for all costs incurred until the effective date of the amendment.

8.3.3 Neither BellSouth nor any agent shall be liable for the content or accuracy of any SLI provided by Comcast Phone under this Agreement. Comcast Phone shall indemnify, except to the extent caused by BellSouth's gross negligence or willful misconduct, hold harmless and defend BellSouth and its agents from and against any damages, losses, liabilities, demands, claims, suits, judgments, costs and expenses (including but not limited to reasonable attorneys' fees and expenses)

arising from BellSouth's tariff obligations or otherwise and resulting from or arising out of any third party's claim of inaccurate Comcast Phone listings or use of the SLI provided pursuant to this Agreement. BellSouth may forward to Comcast Phone any complaints received by BellSouth relating to the accuracy or quality of Comcast Phone listings.

8.3.4 Listings and subsequent updates will be released consistent with BellSouth system changes and/or update scheduling requirements.

**9. Operator Services (Operator Call Processing and Directory Assistance)**

9.1 Operator Call Processing provides: (1) operator handling for call completion (for example, collect, third number billing, and manual calling-card calls). (2) operator or automated assistance for billing after the End User has dialed the called number (for example, calling card calls); and (3) special services including but not limited to Busy Line Verification and Emergency Line Interrupt (ELI), Emergency Agency Call and Operator-assisted Directory Assistance.

9.2 Upon request for BellSouth Operator Call Processing, BellSouth shall:

9.2.1 Process 0+ and 0- dialed local calls

9.2.2 Process 0+ and 0- intraLATA toll calls.

9.2.3 Process calls that are billed to Comcast Phone End User's calling card that can be validated by BellSouth.

9.2.4 Process person-to-person calls.

9.2.5 Process collect calls.

9.2.6 Provide the capability for callers to bill a third party and shall also process such calls.

9.2.7 Process station-to-station calls.

9.2.8 Process Busy Line Verify and Emergency Line Interrupt requests.

9.2.9 Process emergency call trace originated by Public Safety Answering Points.

9.2.10 Process operator-assisted directory assistance calls.

9.2.11 Adhere to equal access requirements, providing Comcast Phone local End Users the same IXC access that BellSouth provides its own operator service.

9.2.12 Exercise at least the same level of fraud control in providing Operator Service to Comcast Phone that BellSouth provides for its own operator service.

9.2.13 Perform Billed Number Screening when handling Collect, Person-to-Person, and Billed-To-Third-Party calls.

9.2.14 Direct customer account and other similar inquiries to the customer service center designated by Comcast Phone.

9.2.15 Provide call records to Comcast Phone in accordance with ODUF standards.

9.2.16 The interface requirements shall conform to the interface specifications for the platform used to provide Operator Services as long as the interface conforms to industry standards.

9.3 Directory Assistance Service. Directory Assistance Service provides local and non-local End User telephone number listings with the option to complete the call at the caller's direction separate and distinct from local switching.

9.3.1 Directory Assistance Service shall provide up to two listing requests per call, if available and if requested by Comcast Phone's End User. BellSouth shall provide caller-optional directory assistance call completion service at rates set forth in BellSouth's General Subscriber Services Tariff to one of the provided listings.

9.4 Directory Assistance Service Updates. BellSouth shall update End User listings changes daily. These changes include:

9.4.1 New End User connections

9.4.2 End User disconnections

9.4.3 End User address changes

9.4.4 These updates shall also be provided for non-listed and non-published numbers for use in emergencies.

9.4.5 Unbranded DA and/or OCP calls ride common trunk groups provisioned by BellSouth from those end offices identified by Comcast Phone to the BellSouth Tops. The calls are routed to "No Announcement."

**10 Branding for Wholesale Operator Call Processing and Directory Assistance**

10.1 BellSouth's branding feature provides a definable announcement to Comcast Phone End Users using Directory Assistance (DA)/Operator Call Processing (OCP) prior to placing such End Users in queue or connecting them to an available operator or automated operator system. This feature allows Comcast Phone to have its calls custom branded with Comcast Phone’s name on whose behalf BellSouth is providing DA and/or OCP. Rates for the branding features are set forth in Exhibit D of this Attachment.

10.2 BellSouth offers three branding options to Comcast Phone when ordering BellSouth's DA and OCP: BellSouth Branding, Unbranding and Custom Branding.

10.3 Upon receipt of the custom branding order from Comcast Phone, the order is considered firm after ten (10) business days. Should Comcast Phone decide to cancel the order, Comcast Phone must provide written notification to Comcast Phone's Local Contract Manager. If Comcast Phone decides to cancel after ten (10) business days from receipt of the custom branding order, Comcast Phone shall pay all charges per the order. For branding and unbranding via Originating Line Number Screening (OLNS), Comcast Phone must contact its account team to initiate the order via the OLNS Branding Order form.

10.4 Branding via Originating Line Number Screening (OLNS). BellSouth Branding, Unbranding and Custom Branding are also available for DA, OCP or both via OLNS software. When utilizing this method of Unbranding or Custom Branding, Comcast Phone shall not be required to purchase dedicated trunking.

10.5 BellSouth Branding is the default branding offering.

10.5.1 For BellSouth to provide Unbranding or Custom Branding via OLNS software for OCP or for DA, Comcast Phone must have its Operating Company Number (OCN(s)) and telephone numbers reside in BellSouth's LIDB. To implement Unbranding and Custom Branding via OLNS software, Comcast Phone must submit a manual order form which requires, among other things, Comcast Phone's OCN and a forecast, pursuant to the appropriate BellSouth form provided, for the traffic volume anticipated for each BellSouth TOPS during the peak busy hour. Comcast Phone shall provide updates to such forecast on a quarterly basis and at any time such forecasted traffic volumes are expected to change significantly. Upon Comcast Phone's purchase of Unbranding or Custom Branding using OLNS software for any particular TOPS, all Comcast Phone End Users served by that TOPS will receive the Unbranded "no announcement" or the Custom Branded announcement.

## 11. Line Information Database (LIDB)

11.1 The BellSouth Line Information Database (LIDB) stores current information on working telephone numbers and billing account numbers. LIDB data is used by providers of Telecommunications Services to validate billing of collect calls, calls billed to a third party number and nonproprietary calling card calls, to screen out attempts to bill calls to payphones, for billing and for fraud prevention.

11.2 Where Comcast Phone is purchasing Resale services BellSouth shall utilize BellSouth's service order generated from Comcast Phone LSR's to populate LIDB with Comcast Phone's End User information BellSouth provides access to information in its LIDB, including Comcast Phone End User information, to

various providers of Telecommunications Services via queries to LIDB pursuant to applicable tariffs. Information stored for Comcast Phone, pursuant to this Agreement, shall be available to those Telecommunications Service providers.

11.2.1 When necessary for fraud control measures, BellSouth may perform additions, updates and deletions of Comcast Phone data to the LIDB (e.g., calling card deactivation).

11.3 Responsibilities of the Parties

11.3.1 BellSouth will administer the data provided by Comcast Phone pursuant to this Agreement in the same manner as BellSouth administers its own data.

11.3.2 Comcast Phone is responsible for completeness and accuracy of the data being provided to BellSouth.

11.3.3 BellSouth shall not be responsible to Comcast Phone for any lost revenue which may result from BellSouth's administration of the LIDB pursuant to its established practices and procedures as they exist and as they may be changed by BellSouth in its sole discretion from time to time.

**12. RAO Hosting**

12.1 RAO Hosting is not required for resale in the BellSouth region.

**13. Optional Daily Usage File (ODUF)**

13.1 The Optional Daily Usage File (ODUF) Agreement with terms and conditions is included in this Attachment as Exhibit B. Rates for ODUF are as set forth in Exhibit D of this Attachment.

13.2 BellSouth will provide ODUF service upon written request.

**14. Enhanced Optional Daily Usage File (EODUF)**

14.1 The Enhanced Optional Daily Usage File (EODUF) service Agreement with terms and conditions is included in this Attachment as Exhibit C. Rates for EODUF are as set forth in Exhibit D of this Attachment.

14.2 BellSouth will provide EODUF service upon written request.

## EXCLUSIONS AND LIMITATIONS ON SERVICES AVAILABLE FOR RESALE (Note 3)

| | Type of Service | AL | | FL | | GA | | KY | | LA | | MS | | NC | | SC | | TN | |
|---|---|---|---|---|---|---|---|---|---|---|---|---|---|---|---|---|---|---|---|
| | | Resale | Discount | Resale | Discount | Resale | Discount | Resale | Discount | Resale | Discount | Resale | Discount | Resale | Discount | Resale | Discount | Resale | Discount |
| | | | | | | | | | | | | | | | | | | | |
| 1 | Grandfathered Services (Note 1) | Yes | Yes | Yes | Yes | Yes | Yes | Yes | Yes | Yes | Yes | Yes | Yes | Yes | Yes | Yes | Yes | Yes | Yes |
| 2 | Promotions - > 90 Days(Note 2 & 3) | Yes | Yes | Yes | Yes | Yes | Yes | Yes | Yes | Yes | Yes | Yes | Yes | Yes | Yes | Yes | Yes | Yes | Yes |
| 3 | Promotions - ≤ 90 Days (Note 2 & 3) | Yes | No | Yes | No | Yes | No | Yes | No | Yes | No | Yes | No | Yes | No | Yes | No | Yes | No |
| 4 | Lifeline/Link Up Services | Yes | Yes | Yes | Yes | Yes | Yes | No | No | Yes | Yes | Yes | Yes | Yes | Yes | Yes | Yes | Yes | Yes |
| 5 | 911/E911 Services | Yes | Yes | Yes | Yes | Yes | Yes | Yes | Yes | No | No | Yes | Yes | Yes | Yes | Yes | Yes | Yes | Yes |
| 6 | N11 Services (Note 1) | Yes | Yes | Yes | Yes | Yes | Yes | No | No | No | No | Yes | Yes | Yes | Yes | No | No | Yes | Yes |
| 7 | MemoryCall® Service | Yes | No | Yes | No | Yes | No | Yes | No | Yes | No | Yes | No | Yes | No | Yes | No | Yes | No |
| 8 | Mobile Services | Yes | No | Yes | No | Yes | No | Yes | No | Yes | No | Yes | No | Yes | No | Yes | No | Yes | No |
| 9 | Federal Subscriber Line Charges | Yes | No | Yes | No | Yes | No | Yes | No | Yes | No | Yes | No | Yes | No | Yes | No | Yes | No |
| 10 | Nonrecurring Charges | Yes | Yes | Yes | Yes | Yes | Yes | Yes | Yes | Yes | Yes | Yes | Yes | Yes | Yes | Yes | Yes | Yes | No |
| 11 | End User Line Chg-Number Portability | Yes | No | Yes | No | Yes | No | Yes | No | Yes | No | Yes | No | Yes | No | Yes | No | Yes | No |
| 12 | Public Telephone Access Svc(PTAS) | Yes | Yes | Yes | Yes | Yes | Yes | Yes | Yes | Yes | Yes | Yes | Yes | Yes | Yes | Yes | No | Yes | Yes |
| 13 | Inside Wire Maint Service Plan | Yes | No | Yes | No | Yes | No | Yes | No | Yes | No | Yes | No | Yes | No | Yes | No | Yes | No |

| | |
|---|---|
| | **Applicable Notes:** |
| 1. | **Grandfathered services** can be resold only to existing subscribers of the grandfathered service. |
| 2. | Where available for resale, **promotions** will be made available only to End Users who would have qualified for the promotion had it been provided by BellSouth directly. |
| 3. | Promotions shall be available only for the term set forth in the applicable tariff. |
| 4. | Some of BellSouth's local exchange and toll telecommunications services are not available in certain central offices and areas. |

## Optional Daily Usage File

1. Upon written request from Comcast Phone, BellSouth will provide the Optional Daily Usage File (ODUF) service to Comcast Phone pursuant to the terms and conditions set forth in this section.

2. Comcast Phone shall furnish all relevant information required by BellSouth for the provision of the ODUF.

3. The ODUF feed provides Comcast Phone messages that were carried over the BellSouth network and processed by BellSouth for Comcast Phone.

4. Charges for ODUF will appear on Comcast Phone's monthly bills for the previous month's usage in arrears. The charges are as set forth in Exhibit D to this Attachment.

5. The ODUF feed will contain both rated and unrated messages. All messages will be in the standard Alliance for Telecommunications Industry Solutions (ATIS) EMI record format.

5.1 Messages that error in the billing system of Comcast Phone will be the responsibility of Comcast Phone. If, however, Comcast Phone should encounter significant volumes of errored messages that prevent processing by Comcast Phone within its systems, BellSouth will work with Comcast Phone to determine the source of the errors and the appropriate resolution.

6. ODUF Specifications

6.1 ODUF Message to be Transmitted

6.1.1 The following messages recorded by BellSouth will be transmitted to Comcast Phone:

6.1.1.1 Message recording for per use/per activation type services (examples: Three Way Calling, Verify, Interrupt, Call Return, etc.)

6.1.1.2 Measured local calls

6.1.1.3 Directory Assistance messages

6.1.1.4 IntraLATA Toll

6.1.1.5 WATS and 800 Service

6.1.1.6 N11

6.1.1.7 Information Service Provider Messages

6.1.1.8 Operator Services Messages

6.1.1.9 Operator Services Message Attempted Calls

6.1.1.10 Credit/Cancel Records

6.1.1.11 Usage for Voice Mail Message Service

6.1.2 Rated Incollects (messages BellSouth receives from other revenue accounting offices) appear on ODUF. Rated Incollects will be intermingled with BellSouth recorded rated and unrated usage. Rated Incollects will not be packed separately.

6.1.3 BellSouth will perform duplicate record checks on records processed to ODUF. Any duplicate messages detected will be deleted and not sent to Comcast Phone.

6.1.4 In the event that Comcast Phone detects a duplicate on ODUF they receive from BellSouth, Comcast Phone will drop the duplicate message and will not return the duplicate to BellSouth.

6.2 ODUF Physical File Characteristics

6.2.1 ODUF will be distributed to Comcast Phone via Secure File Transfer Protocol (FTP). The ODUF feed will be a variable block format. The data on the ODUF feed will be in a non-compacted EMI format (175 byte format plus modules). It will be created on a daily basis Monday through Friday except holidays. Details such as dataset name and delivery schedule will be addressed during negotiations of the distribution medium. There will be a maximum of one dataset per workday per OCN. If BellSouth determines the Secure FTP Mailbox is nearing capacity levels, BellSouth may move the customer to CONNECT:Direct file delivery.

6.2.2 If the customer is moved, CONNECT:Direct data circuits (private line or dial-up) will be required between BellSouth and Comcast Phone for the purpose of data transmission. Where a dedicated line is required, Comcast Phone will be responsible for ordering the circuit, overseeing its installation and coordinating the installation with BellSouth. Comcast Phone will also be responsible for any charges associated with this line. Equipment required on the BellSouth end to attach the line to the mainframe computer and to transmit messages successfully on an ongoing basis will be negotiated on an individual case basis. Any costs incurred for such equipment will be Comcast Phone's responsibility. Where a dial-up facility is required, dial circuits will be installed in the BellSouth data center by BellSouth and the associated charges assessed to Comcast Phone. Additionally, all message toll charges associated with the use of the dial circuit by Comcast Phone will be the responsibility of Comcast Phone.

Associated equipment on the BellSouth end, including a modem, will be negotiated on an individual case basis between the Parties. All equipment, including modems and software, that is required on Comcast Phone end for the purpose of data transmission will be the responsibility of Comcast Phone.

6.2.3 If Comcast Phone utilizes FTP for data file transmission, purchase of the FTP software will be the responsibility of Comcast Phone.

6.3 ODUF Packing Specifications

6.3.1 The data will be packed using ATIS EMI records. A pack will contain a minimum of one message record or a maximum of 99,999 message records plus a pack header record and a pack trailer record. One transmission can contain a maximum of 99 packs and a minimum of one pack.

6.3.2 The OCN, From RAO, and Invoice Number will control the invoice sequencing. The From RAO will be used to identify to Comcast Phone which BellSouth RAO is sending the message. BellSouth and Comcast Phone will use the invoice sequencing to control data exchange. BellSouth will be notified of sequence failures identified by Comcast Phone and resend the data as appropriate.

6.4 ODUF Pack Rejection

6.4.1 Comcast Phone will notify BellSouth within one business day of rejected packs (via the mutually agreed medium). Packs could be rejected because of pack sequencing discrepancies or a critical edit failure on the Pack Header or Pack Trailer records (e.g., out-of-balance condition on grand totals, invalid data populated). Standard ATIS EMI error codes will be used. Comcast Phone will not be required to return the actual rejected data to BellSouth. Rejected packs will be corrected and retransmitted to Comcast Phone by BellSouth.

6.5 ODUF Control Data

Comcast Phone will send one confirmation record per pack that is received from BellSouth. This confirmation record will indicate Comcast Phone's receipt of the pack and the acceptance or rejection of the pack. Pack Status Code(s) will be populated using standard ATIS EMI error codes for packs that were rejected by Comcast Phone for reasons stated in the above section.

6.6 ODUF Testing

6.6.1 Upon request from Comcast Phone, BellSouth shall send ODUF test files to Comcast Phone. The Parties agree to review and discuss the ODUF file content and/or format. For testing of usage results, BellSouth shall request that Comcast Phone set up a production (live) file. The live test may consist of Comcast Phone’s employees

making test calls for the types of services Comcast Phone requests on ODUF. These test calls are logged by Comcast Phone, and the logs are provided to BellSouth. These logs will be used to verify the files. Testing will be completed within thirty (30) days from the date on which the initial test file was sent.

## Enhanced Optional Daily Usage File

1. Upon written request from Comcast Phone, BellSouth will provide the Enhanced Optional Daily Usage File (EODUF) service to Comcast Phone pursuant to the terms and conditions set forth in this section. EODUF will only be sent to existing ODUF subscribers who request the EODUF option.

2. Comcast Phone shall furnish all relevant information required by BellSouth for the provision of the EODUF.

3. The EODUF will provide usage data for local calls originating from resold Flat Rate Business and Residential Lines.

4. Charges for EODUF will appear on Comcast Phone's monthly bills for the previous month's usage in arrears. The charges are as set forth in Exhibit D to this Attachment.

5. All messages will be in the standard Alliance for Telecommunications Industry Solutions (ATIS) EMI record format.

6. Messages that error in the billing system of Comcast Phone will be the responsibility of Comcast Phone. If, however, Comcast Phone should encounter significant volumes of errored messages that prevent processing by Comcast Phone within its systems, BellSouth will work with Comcast Phone to determine the source of the errors and the appropriate resolution.

7. EODUF Specifications.

7.1 EODUF Usage To Be Transmitted

7.1.1 The following messages recorded by BellSouth will be transmitted to Comcast Phone:

7.1.1.1 Customer usage data for flat rated local call originating from Comcast Phone's End User lines (1FB or 1FR). The EODUF record for flat rate messages will include:

7.1.1.1.1 Date of Call

7.1.1.1.2 From Number

7.1.1.1.3 To Number

7.1.1.1.4 Connect Time

7.1.1.1.5 Conversation Time

7.1.1.1.6 Method of Recording

7.1.1.1.7 From RAO

7.1.1.1.8 Rate Class

7.1.1.1.9 Message Type

7.1.1.1.10 Billing Indicators

7.1.1.1.11 Bill to Number

7.1.2 BellSouth will perform duplicate record checks on EODUF records processed to O DUF. Any duplicate messages detected will be deleted and not sent to Comcast Phone.

7.1.3 In the event that Comcast Phone detects a duplicate on EODUF they receive from BellSouth, Comcast Phone will drop the duplicate message and will not return the duplicate to BellSouth.

7.2 EODUF Physical File Characteristics

7.2.1 EODUF feed will be distributed to Comcast Phone via Secure File Transfer Protocol (FTP). The EODUF messages will be intermingled among Comcast Phone's Optional Daily Usage File (ODUF) messages. The EODUF will be a variable block format. The data on the EODUF will be in a non-compacted EMI format (175 byte format plus modules). It will be created on a daily basis Monday through Friday except holiday. If BellSouth determines the Secure FTP mailbox is nearing capacity levels, BellSouth may move the customer to CONNECT:Direct file delivery.

7.2.2 Data circuits (private line or dial-up) may be required between BellSouth and Comcast Phone for the purpose of data transmission. Where a dedicated line is required, Comcast Phone will be responsible for ordering the circuit, overseeing its installation and coordinating the installation with BellSouth. Comcast Phone will also be responsible for any charges associated with this line. Equipment required on the BellSouth end to attach the line to the mainframe computer and to transmit successfully ongoing will be negotiated on an individual case basis. Where a dial-up facility is required, dial circuits will be installed in the BellSouth data center by BellSouth and the associated charges assessed to Comcast Phone. Additionally, all message toll charges associated with the use of the dial circuit by Comcast Phone

will be the responsibility of Comcast Phone. Associated equipment on the BellSouth end, including a modem, will be negotiated on an individual case basis between the Parties. All equipment, including modems and software, that is required on Comcast Phone's end for the purpose of data transmission will be the responsibility of Comcast Phone.

7.2.3 If Comcast Phone utilizes FTP for data file transmission, purchase of the FTP software will be the responsibility of Comcast Phone.

7.3 EODUF Packing Specifications

7.3.1 The data will be packed using ATIS EMI records. A pack will contain a minimum of one message record or a maximum of 99,999 message records plus a pack header record and a pack trailer record. One transmission can contain a maximum of 99 packs and a minimum of one pack.

7.3.2 The OCN, From (RAO), and Invoice Number will control the invoice sequencing. The From RAO will be used to identify to Comcast Phone which BellSouth RAO is sending the message. BellSouth and Comcast Phone will use the invoice sequencing to control data exchange. BellSouth will be notified of sequence failures identified by Comcast Phone and resend the data as appropriate.

## RESALE DISCOUNTS & RATES - Alabama

Attachment: 1 Exh D

| CATEGORY | RATE ELEMENTS | Interim | Zone | BCS | USOC | RATES($) | | | | | Svc Order Submitted Elec per LSR | Svc Order Submitted Manually per LSR | Incremental Charge - Manual Svc Order vs. Electronic-1st | Incremental Charge - Manual Svc Order vs. Electronic-Add'l | Incremental Charge - Manual Svc Order vs. Electronic-Disc 1st | Incremental Charge - Manual Svc Order vs. Electronic-Disc Add'l |
|---|---|---|---|---|---|---|---|---|---|---|---|---|---|---|---|---|
| | | | | | | Rec | Nonrecurring | | Nonrecurring Disconnect | | OSS Rates($) | | | | | |
| | | | | | | | First | Add'l | First | Add'l | SOMEC | SOMAN | SOMAN | SOMAN | SOMAN | SOMAN |
| **APPLICABLE DISCOUNTS** | | | | | | | | | | | | | | | | |
| | Residence % | | | | | 16.30 | | | | | | | | | | |
| | Business % | | | | | 16.30 | | | | | | | | | | |
| | CSAs % | | | | | 16.30 | | | | | | | | | | |
| **OPERATIONS SUPPORT SYSTEMS (OSS) - "STATE SPECIFIC RATES"** | | | | | | | | | | | | | | | | |
| NOTE: (1) CLEC should contact its contract negotiator if it prefers the "regional" OSS charges as offered by BellSouth. The OSS charges currently contained in this rate exhibit are the PSC state ordered "state specificl" service ordering charges. CLEC may elect the regional service ordering charge, however, CLEC can not obtain a mixture of the two regardless if CLEC has a interconnection contract established in each of the 9 states | | | | | | | | | | | | | | | | |
| | OSS - Electronic Service Order Charge, Per Local Service Request (LSR) - Resale Only | | | | SOMEC | | 3.95 | 0.00 | 3.33 | 0.00 | | | | | | |
| | OSS - Manual Service Order Charge, Per Local Service Request (LSR) - Resale Only | | | | SOMAN | | 18.82 | 0.00 | 18.82 | 0.00 | | | | | | |
| **DIRECTORY ASSISTANCE CUSTOM BRANDING ANNOUNCEMENT via OLNS SOFTWARE** | | | | | | | | | | | | | | | | |
| | Recording of DA Custom Branded Announcement | | | | | | 3,000.00 | 3,000.00 | | | | | | | | |
| | Loading of DA Custom Branded Anouncement per Switch per OCN | | | | | | 1,170.00 | 1,170.00 | | | | | | | | |
| **DIRECTORY ASSISTANCE UNBRANDING via OLNS SOFTWARE** | | | | | | | | | | | | | | | | |
| | Loading of DA per OCN (1 OCN per Order) | | | | | | 420.00 | 420.00 | | | | | | | | |
| | Loading of DA per Switch per OCN | | | | | | 16.00 | 16.00 | | | | | | | | |
| **OPERATOR ASSISTANCE CUSTOM BRANDING ANNOUNCEMENT via OLNS SOFTWARE** | | | | | | | | | | | | | | | | |
| | Recording of Custom Branded OA Announcement | | | | | | 7,000.00 | 7,000.00 | | | | | | | | |
| | Loading of Custom Branded OA Announcement per shelf/NAV per OCN | | | | | | 500.00 | 500.00 | | | | | | | | |
| | Loading of OA Custom Branded Announcement per Switch per OCN | | | | | | 1,170.00 | 1,170.00 | | | | | | | | |
| **OPERATOR ASSISTANCE UNBRANDING via OLNS SOFTWARE** | | | | | | | | | | | | | | | | |
| | Loading of OA per OCN (Regional) | | | | | | 1,200.00 | 1,200.00 | | | | | | | | |
| **ODUF/EODUF SERVICES** | | | | | | | | | | | | | | | | |
| | **OPTIONAL DAILY USAGE FILE (ODUF)** | | | | | | | | | | | | | | | |
| | ODUF: Recording, per message | | | | | 0.000011 | | | | | | | | | | |
| | ODUF: Message Processing, per message | | | | | 0.004101 | | | | | | | | | | |
| | ODUF: Message Processing, per Magnetic Tape provisioned | | | | | 42.67 | | | | | | | | | | |
| | ODUF: Data Transmission (CONNECT:DIRECT), per message | | | | | 0.000094 | | | | | | | | | | |
| | **ENHANCED OPTIONAL DAILY USAGE FILE (EODUF)** | | | | | | | | | | | | | | | |
| | EODUF: Message Processing, per message | | | | | 0.22 | | | | | | | | | | |
| | | | | | | | 1,200.00 | 1,200.00 | | | | | | | | |

## RESALE DISCOUNTS & RATES - Louisiana

Attachment: 1 Exh D

| CATEGORY | RATE ELEMENTS | Interim | Zone | BCS | USOC | RATES($) | | | | | Svc Order Submitted Elec per LSR | Svc Order Submitted Manually per LSR | Incremental Charge - Manual Svc Order vs. Electronic-1st | Incremental Charge - Manual Svc Order vs. Electronic-Add'l | Incremental Charge - Manual Svc Order vs. Electronic-Disc 1st | Incremental Charge - Manual Svc Order vs. Electronic-Disc Add'l |
|---|---|---|---|---|---|---|---|---|---|---|---|---|---|---|---|---|
| | | | | | | Rec | Nonrecurring | | Nonrecurring Disconnect | | OSS Rates($) | | | | | |
| | | | | | | | First | Add'l | First | Add'l | SOMEC | SOMAN | SOMAN | SOMAN | SOMAN | SOMAN |
| **APPLICABLE DISCOUNTS** | | | | | | | | | | | | | | | | |
| | Residence % | | | | | 20.72 | | | | | | | | | | |
| | Business % | | | | | 20.72 | | | | | | | | | | |
| | CSAs % | | | | | 9.05 | | | | | | | | | | |
| **OPERATIONS SUPPORT SYSTEMS (OSS) - "STATE SPECIFIC RATES"** | | | | | | | | | | | | | | | | |
| NOTE: (1) CLEC should contact its contract negotiator if it prefers the "regional" OSS charges as offered by BellSouth. The OSS charges currently contained in this rate exhibit are the PSC state ordered "state specificl" service ordering charges. CLEC may elect the regional service ordering charge, however, CLEC can not obtain a mixture of the two regardless if CLEC has a interconnection contract established in each of the 9 states | | | | | | | | | | | | | | | | |
| | OSS - Electronic Service Order Charge, Per Local Service Request (LSR) - Resale Only | | | | SOMEC | | 2.28 | 0.00 | 2.28 | 0.00 | | | | | | |
| | OSS - Manual Service Order Charge, Per Local Service Request (LSR) - Resale Only | | | | SOMAN | | 18.27 | 0.00 | 18.27 | 0.00 | | | | | | |
| **DIRECTORY ASSISTANCE CUSTOM BRANDING ANNOUNCEMENT via OLNS SOFTWARE** | | | | | | | | | | | | | | | | |
| | Recording of DA Custom Branded Announcement | | | | | | 3,000.00 | 3,000.00 | | | | | | | | |
| | Loading of DA Custom Branded Anouncement per Switch per OCN | | | | | | 1,170.00 | 1,170.00 | | | | | | | | |
| **DIRECTORY ASSISTANCE UNBRANDING via OLNS SOFTWARE** | | | | | | | | | | | | | | | | |
| | Loading of DA per OCN (1 OCN per Order) | | | | | | 420.00 | 420.00 | | | | | | | | |
| | Loading of DA per Switch per OCN | | | | | | 16.00 | 16.00 | | | | | | | | |
| **OPERATOR ASSISTANCE CUSTOM BRANDING ANNOUNCEMENT via OLNS SOFTWARE** | | | | | | | | | | | | | | | | |
| | Recording of Custom Branded OA Announcement | | | | | | 7,000.00 | 7,000.00 | | | | | | | | |
| | Loading of Custom Branded OA Announcement per shelf/NAV per OCN | | | | | | 500.00 | 500.00 | | | | | | | | |
| | Loading of OA Custom Branded Announcement per Switch per OCN | | | | | | 1,170.00 | 1,170.00 | | | | | | | | |
| **OPERATOR ASSISTANCE UNBRANDING via OLNS SOFTWARE** | | | | | | | | | | | | | | | | |
| | Loading of OA per OCN (Regional) | | | | | | 1,200.00 | 1,200.00 | | | | | | | | |
| **ODUF/EODUF SERVICES** | | | | | | | | | | | | | | | | |
| | **OPTIONAL DAILY USAGE FILE (ODUF)** | | | | | | | | | | | | | | | |
| | ODUF: Recording, per message | | | | | 0.0000117 | | | | | | | | | | |
| | ODUF: Message Processing, per message | | | | | 0.004641 | | | | | | | | | | |
| | ODUF: Message Processing, per Magnetic Tape provisioned | | | | | 48.45 | | | | | | | | | | |
| | ODUF: Data Transmission (CONNECT:DIRECT), per message | | | | | 0.00010568 | | | | | | | | | | |
| | **ENHANCED OPTIONAL DAILY USAGE FILE (EODUF)** | | | | | | | | | | | | | | | |
| | EODUF: Message Processing, per message | | | | | 0.250015 | | | | | | | | | | |

| RESALE DISCOUNTS & RATES - Mississippi | | | | | | | | | | | | | | Attachment: 1 Exh D | | | |
|---|---|---|---|---|---|---|---|---|---|---|---|---|---|---|---|---|---|
| CATEGORY | | RATE ELEMENTS | Interim | Zone | BCS | USOC | RATES($) | | | | | Svc Order Submitted Elec per LSR | Svc Order Submitted Manually per LSR | Incremental Charge - Manual Svc Order vs. Electronic-1st | Incremental Charge - Manual Svc Order vs. Electronic-Add'l | Incremental Charge - Manual Svc Order vs. Electronic-Disc 1st | Incremental Charge - Manual Svc Order vs. Electronic-Disc Add'l |
| | | | | | | | Rec | Nonrecurring | | Nonrecurring Disconnect | | OSS Rates($) | | | | | |
| | | | | | | | | First | Add'l | First | Add'l | SOMEC | SOMAN | SOMAN | SOMAN | SOMAN | SOMAN |
| | | | | | | | | | | | | | | | | | |
| **APPLICABLE DISCOUNTS** | | | | | | | | | | | | | | | | | |
| | | Residence % | | | | | 15.75 | | | | | | | | | | |
| | | Business % | | | | | 15.75 | | | | | | | | | | |
| | | CSAs % | | | | | 15.75 | | | | | | | | | | |
| **OPERATIONS SUPPORT SYSTEMS (OSS) - "STATE SPECIFIC RATES"** | | | | | | | | | | | | | | | | | |
| | NOTE: (1) CLEC should contact its contract negotiator if it prefers the "regional" OSS charges as offered by BellSouth. The OSS charges currently contained in this rate exhibit are the PSC state ordered "state specificl" service ordering charges. CLEC may elect the regional service ordering charge, however, CLEC can not obtain a mixture of the two regardless if CLEC has a interconnection contract established in each of the 9 states | | | | | | | | | | | | | | | | |
| | | OSS - Electronic Service Order Charge, Per Local Service Request (LSR) - Resale Only | | | | SOMEC | | 3.80 | 0.00 | 3.19 | 0.00 | | | | | | |
| | | OSS - Manual Service Order Charge, Per Local Service Request (LSR) - Resale Only | | | | SOMAN | | 18.93 | 0.00 | 18.93 | 0.00 | | | | | | |
| **DIRECTORY ASSISTANCE CUSTOM BRANDING ANNOUNCEMENT via OLNS SOFTWARE** | | | | | | | | | | | | | | | | | |
| | | Recording of DA Custom Branded Announcement | | | | | | 3,000.00 | 3,000.00 | | | | | | | | |
| | | Loading of DA Custom Branded Anouncement per Switch per OCN | | | | | | 1,170.00 | 1,170.00 | | | | | | | | |
| **DIRECTORY ASSISTANCE UNBRANDING via OLNS SOFTWARE** | | | | | | | | | | | | | | | | | |
| | | Loading of DA per OCN (1 OCN per Order) | | | | | | 420.00 | 420.00 | | | | | | | | |
| | | Loading of DA per Switch per OCN | | | | | | 16.00 | 16.00 | | | | | | | | |
| **OPERATOR ASSISTANCE CUSTOM BRANDING ANNOUNCEMENT via OLNS SOFTWARE** | | | | | | | | | | | | | | | | | |
| | | Recording of Custom Branded OA Announcement | | | | | | 7,000.00 | 7,000.00 | | | | | | | | |
| | | Loading of Custom Branded OA Announcement per shelf/NAV per OCN | | | | | | 500.00 | 500.00 | | | | | | | | |
| | | Loading of OA Custom Branded Announcement per Switch per OCN | | | | | | 1,170.00 | 1,170.00 | | | | | | | | |
| **OPERATOR ASSISTANCE UNBRANDING via OLNS SOFTWARE** | | | | | | | | | | | | | | | | | |
| | | Loading of OA per OCN (Regional) | | | | | | 1,200.00 | 1,200.00 | | | | | | | | |
| **ODUF/EODUF SERVICES** | | | | | | | | | | | | | | | | | |
| | **OPTIONAL DAILY USAGE FILE (ODUF)** | | | | | | | | | | | | | | | | |
| | | ODUF: Recording, per message | | | | | 0.0000063 | | | | | | | | | | |
| | | ODUF: Message Processing, per message | | | | | 0.004707 | | | | | | | | | | |
| | | ODUF: Message Processing, per Magnetic Tape provisioned | | | | | 49.04 | | | | | | | | | | |
| | | ODUF: Data Transmission (CONNECT:DIRECT), per message | | | | | 0.00010669 | | | | | | | | | | |
| | **ENHANCED OPTIONAL DAILY USAGE FILE (EODUF)** | | | | | | | | | | | | | | | | |
| | | EODUF: Message Processing, per message | | | | | 0.250424 | | | | | | | | | | |

| RESALE DISCOUNTS & RATES - North Carolina | | | | | | | | | | | | | | Attachment: 1 Exh D | | | |
|---|---|---|---|---|---|---|---|---|---|---|---|---|---|---|---|---|---|
| CATEGORY | | RATE ELEMENTS | Interim | Zone | BCS | USOC | RATES($) | | | | | Svc Order Submitted Elec per LSR | Svc Order Submitted Manually per LSR | Incremental Charge - Manual Svc Order vs. Electronic-1st | Incremental Charge - Manual Svc Order vs. Electronic-Add'l | Incremental Charge - Manual Svc Order vs. Electronic-Disc 1st | Incremental Charge - Manual Svc Order vs. Electronic-Disc Add'l |
| | | | | | | | Rec | Nonrecurring | | Nonrecurring Disconnect | | OSS Rates($) | | | | | |
| | | | | | | | | First | Add'l | First | Add'l | SOMEC | SOMAN | SOMAN | SOMAN | SOMAN | SOMAN |
| | | | | | | | | | | | | | | | | | |
| **APPLICABLE DISCOUNTS** | | | | | | | | | | | | | | | | | |
| | | Residence % | | | | | 21.50 | | | | | | | | | | |
| | | Business % | | | | | 17.60 | | | | | | | | | | |
| | | CSAs % | | | | | 17.60 | | | | | | | | | | |
| **OPERATIONS SUPPORT SYSTEMS (OSS) - "STATE SPECIFIC RATES"** | | | | | | | | | | | | | | | | | |
| | NOTE: (1) CLEC should contact its contract negotiator if it prefers the "regional" OSS charges as offered by BellSouth. CLEC may elect the regional service ordering charge, however, CLEC can not obtain a mixture of the two regardless if CLEC has a interconnection contract established in each of the 9 states | | | | | | | | | | | | | | | | |
| | | OSS - Electronic Service Order Charge, Per Local Service Request (LSR) - Resale Only | | | | SOMEC | | 2.98 | 0.00 | 2.98 | 0.00 | | | | | | |
| | | OSS - Manual Service Order Charge, Per Local Service Request (LSR) - Resale Only | | | | SOMAN | | 15.20 | 0.00 | 15.20 | 0.00 | | | | | | |
| **DIRECTORY ASSISTANCE CUSTOM BRANDING ANNOUNCEMENT via OLNS SOFTWARE** | | | | | | | | | | | | | | | | | |
| | | Recording of DA Custom Branded Announcement | | | | | | 3,000.00 | 3,000.00 | | | | | | | | |
| | | Loading of DA Custom Branded Anouncement per Switch per OCN | | | | | | 1,170.00 | 1,170.00 | | | | | | | | |
| **DIRECTORY ASSISTANCE UNBRANDING via OLNS SOFTWARE** | | | | | | | | | | | | | | | | | |
| | | Loading of DA per OCN (1 OCN per Order) | | | | | | 420.00 | 420.00 | | | | | | | | |
| | | Loading of DA per Switch per OCN | | | | | | 16.00 | 16.00 | | | | | | | | |
| **OPERATOR ASSISTANCE CUSTOM BRANDING ANNOUNCEMENT via OLNS SOFTWARE** | | | | | | | | | | | | | | | | | |
| | | Recording of Custom Branded OA Announcement | | | | | | 7,000.00 | 7,000.00 | | | | | | | | |
| | | Loading of Custom Branded OA Announcement per shelf/NAV per OCN | | | | | | 500.00 | 500.00 | | | | | | | | |
| | | Loading of OA Custom Branded Announcement per Switch per OCN | | | | | | 1,170.00 | 1,170.00 | | | | | | | | |
| **OPERATOR ASSISTANCE UNBRANDING via OLNS SOFTWARE** | | | | | | | | | | | | | | | | | |
| | | Loading of OA per OCN (Regional) | | | | | | 1,200.00 | 1,200.00 | | | | | | | | |
| **ODUF/EODUF SERVICES** | | | | | | | | | | | | | | | | | |
| | **OPTIONAL DAILY USAGE FILE (ODUF)** | | | | | | | | | | | | | | | | |
| | | ODUF: Recording, per message | | | | | 0.0000174 | | | | | | | | | | |
| | | ODUF: Message Processing, per message | | | | | 0.001647 | | | | | | | | | | |
| | | ODUF: Message Processing, per Magnetic Tape provisioned | | | | | 35.91 | | | | | | | | | | |
| | | ODUF: Data Transmission (CONNECT:DIRECT), per message | | | | | 0.00011029 | | | | | | | | | | |
| | **ENHANCED OPTIONAL DAILY USAGE FILE (EODUF)** | | | | | | | | | | | | | | | | |
| | | EODUF: Message Processing, per message | | | | | 0.131005 | | | | | | | | | | |

| RESALE DISCOUNTS & RATES - South Carolina | | | | | | | | | | | | | | Attachment: 1 Exh D | | | |
|---|---|---|---|---|---|---|---|---|---|---|---|---|---|---|---|---|---|
| CATEGORY | | RATE ELEMENTS | Interim | Zone | BCS | USOC | RATES($) | | | | | Svc Order Submitted Elec per LSR | Svc Order Submitted Manually per LSR | Incremental Charge - Manual Svc Order vs. Electronic-1st | Incremental Charge - Manual Svc Order vs. Electronic-Add'l | Incremental Charge - Manual Svc Order vs. Electronic-Disc 1st | Incremental Charge - Manual Svc Order vs. Electronic-Disc Add'l |
| | | | | | | | Rec | Nonrecurring | | Nonrecurring Disconnect | | OSS Rates($) | | | | | |
| | | | | | | | | First | Add'l | First | Add'l | SOMEC | SOMAN | SOMAN | SOMAN | SOMAN | SOMAN |
| | | | | | | | | | | | | | | | | | |
| **APPLICABLE DISCOUNTS** | | | | | | | | | | | | | | | | | |
| | | Residence % | | | | | 14.80 | | | | | | | | | | |
| | | Business % | | | | | 14.80 | | | | | | | | | | |
| | | CSAs % | | | | | 8.98 | | | | | | | | | | |
| **OPERATIONS SUPPORT SYSTEMS (OSS) - "STATE SPECIFIC RATES"** | | | | | | | | | | | | | | | | | |
| | NOTE: (1) CLEC should contact its contract negotiator if it prefers the "regional" OSS charges as offered by BellSouth. The OSS charges currently contained in this rate exhibit are the PSC state ordered "state specificl" service ordering charges. CLEC may elect the regional service ordering charge, however, CLEC can not obtain a mixture of the two regardless if CLEC has a interconnection contract established in each of the 9 states | | | | | | | | | | | | | | | | |
| | | OSS - Electronic Service Order Charge, Per Local Service Request (LSR) - Resale Only | | | | SOMEC | | 4.03 | 0.00 | 3.41 | 0.00 | | | | | | |
| | | OSS - Manual Service Order Charge, Per Local Service Request (LSR) - Resale Only | | | | SOMAN | | 18.86 | 0.00 | 18.86 | 0.00 | | | | | | |
| **DIRECTORY ASSISTANCE CUSTOM BRANDING ANNOUNCEMENT via OLNS SOFTWARE** | | | | | | | | | | | | | | | | | |
| | | Recording of DA Custom Branded Announcement | | | | | | 3,000.00 | 3,000.00 | | | | | | | | |
| | | Loading of DA Custom Branded Anouncement per Switch per OCN | | | | | | 1,170.00 | 1,170.00 | | | | | | | | |
| **DIRECTORY ASSISTANCE UNBRANDING via OLNS SOFTWARE** | | | | | | | | | | | | | | | | | |
| | | Loading of DA per OCN (1 OCN per Order) | | | | | | 420.00 | 420.00 | | | | | | | | |
| | | Loading of DA per Switch per OCN | | | | | | 16.00 | 16.00 | | | | | | | | |
| **OPERATOR ASSISTANCE CUSTOM BRANDING ANNOUNCEMENT via OLNS SOFTWARE** | | | | | | | | | | | | | | | | | |
| | | Recording of Custom Branded OA Announcement | | | | | | 7,000.00 | 7,000.00 | | | | | | | | |
| | | Loading of Custom Branded OA Announcement per shelf/NAV per OCN | | | | | | 500.00 | 500.00 | | | | | | | | |
| | | Loading of OA Custom Branded Announcement per Switch per OCN | | | | | | 1,170.00 | 1,170.00 | | | | | | | | |
| **OPERATOR ASSISTANCE UNBRANDING via OLNS SOFTWARE** | | | | | | | | | | | | | | | | | |
| | | Loading of OA per OCN (Regional) | | | | | | 1,200.00 | 1,200.00 | | | | | | | | |
| **ODUF/EODUF SERVICES** | | | | | | | | | | | | | | | | | |
| | **OPTIONAL DAILY USAGE FILE (ODUF)** | | | | | | | | | | | | | | | | |
| | | ODUF: Recording, per message | | | | | 0.0000216 | | | | | | | | | | |
| | | ODUF: Message Processing, per message | | | | | 0.004704 | | | | | | | | | | |
| | | ODUF: Message Processing, per Magnetic Tape provisioned | | | | | 48.87 | | | | | | | | | | |
| | | ODUF: Data Transmission (CONNECT:DIRECT), per message | | | | | 0.00010863 | | | | | | | | | | |
| | **ENHANCED OPTIONAL DAILY USAGE FILE (EODUF)** | | | | | | | | | | | | | | | | |
| | | EODUF: Message Processing, per message | | | | | 0.258301 | | | | | | | | | | |

| RESALE DISCOUNTS & RATES - Tennessee | | | | | | | | | | | | | | Attachment: 1 Exh D | | | |
|---|---|---|---|---|---|---|---|---|---|---|---|---|---|---|---|---|---|
| CATEGORY | | RATE ELEMENTS | Interim | Zone | BCS | USOC | RATES($) | | | | | Svc Order Submitted Elec per LSR | Svc Order Submitted Manually per LSR | Incremental Charge - Manual Svc Order vs. Electronic-1st | Incremental Charge - Manual Svc Order vs. Electronic-Add'l | Incremental Charge - Manual Svc Order vs. Electronic-Disc 1st | Incremental Charge - Manual Svc Order vs. Electronic-Disc Add'l |
| | | | | | | | Rec | Nonrecurring | | Nonrecurring Disconnect | | OSS Rates($) | | | | | |
| | | | | | | | | First | Add'l | First | Add'l | SOMEC | SOMAN | SOMAN | SOMAN | SOMAN | SOMAN |
| | | | | | | | | | | | | | | | | | |
| **APPLICABLE DISCOUNTS** | | | | | | | | | | | | | | | | | |
| | | Residence % | | | | | 16.00 | | | | | | | | | | |
| | | Business % | | | | | 16.00 | | | | | | | | | | |
| | | CSAs % | | | | | 16.00 | | | | | | | | | | |
| **OPERATIONS SUPPORT SYSTEMS (OSS) - "STATE SPECIFIC RATES"** | | | | | | | | | | | | | | | | | |
| | NOTE: (1) CLEC should contact its contract negotiator if it prefers the "regional" OSS charges as offered by BellSouth. The OSS charges currently contained in this rate exhibit are the PSC state ordered "state specificl" service ordering charges. CLEC may elect the regional service ordering charge, however, CLEC can not obtain a mixture of the two regardless if CLEC has a interconnection contract established in each of the 9 states | | | | | | | | | | | | | | | | |
| | | OSS - Electronic Service Order Charge, Per Local Service Request (LSR) - Resale Only | | | | SOMEC | | 10.80 | 0.00 | 10.80 | 0.00 | | | | | | |
| | | OSS - Manual Service Order Charge, Per Local Service Request (LSR) - Resale Only | | | | SOMAN | | 22.00 | 0.00 | 22.00 | 0.00 | | | | | | |
| **DIRECTORY ASSISTANCE CUSTOM BRANDING ANNOUNCEMENT via OLNS SOFTWARE** | | | | | | | | | | | | | | | | | |
| | | Recording of DA Custom Branded Announcement | | | | | | 3,000.00 | 3,000.00 | | | | | | | | |
| | | Loading of DA Custom Branded Anouncement per Switch per OCN | | | | | | 1,170.00 | 1,170.00 | | | | | | | | |
| **DIRECTORY ASSISTANCE UNBRANDING via OLNS SOFTWARE** | | | | | | | | | | | | | | | | | |
| | | Loading of DA per OCN (1 OCN per Order) | | | | | | 420.00 | 420.00 | | | | | | | | |
| | | Loading of DA per Switch per OCN | | | | | | 16.00 | 16.00 | | | | | | | | |
| **OPERATOR ASSISTANCE CUSTOM BRANDING ANNOUNCEMENT via OLNS SOFTWARE** | | | | | | | | | | | | | | | | | |
| | | Recording of Custom Branded OA Announcement | | | | | | 7,000.00 | 7,000.00 | | | | | | | | |
| | | Loading of Custom Branded OA Announcement per shelf/NAV per OCN | | | | | | 500.00 | 500.00 | | | | | | | | |
| | | Loading of OA Custom Branded Announcement per Switch per OCN | | | | | | 1,170.00 | 1,170.00 | | | | | | | | |
| **OPERATOR ASSISTANCE UNBRANDING via OLNS SOFTWARE** | | | | | | | | | | | | | | | | | |
| | | Loading of OA per OCN (Regional) | | | | | | 1,200.00 | 1,200.00 | | | | | | | | |
| **ODUF/EODUF SERVICES** | | | | | | | | | | | | | | | | | |
| | **OPTIONAL DAILY USAGE FILE (ODUF)** | | | | | | | | | | | | | | | | |
| | | ODUF: Recording, per message | | | | | 0.0000044 | | | | | | | | | | |
| | | ODUF: Message Processing, per message | | | | | 0.002446 | | | | | | | | | | |
| | | ODUF: Message Processing, per Magnetic Tape provisioned | | | | | 35.54 | | | | | | | | | | |
| | | ODUF: Data Transmission (CONNECT:DIRECT), per message | | | | | 0.0000339 | | | | | | | | | | |
| | **ENHANCED OPTIONAL DAILY USAGE FILE (EODUF)** | | | | | | | | | | | | | | | | |
| | | EODUF: Message Processing, per message | | | | | 0.229779 | | | | | | | | | | |

# Attachment 2

# Network Elements and Other Services

# For New CLECs

# TABLE OF CONTENTS

1 INTRODUCTION ..... 3

2 LOOPS ..... 7

3 LINE SPLITTING ..... 28

4 UNBUNDLED NETWORK ELEMENT COMBINATIONS ..... 30

5 DEDICATED TRANSPORT AND DARK FIBER TRANSPORT ..... 32

6 AUTOMATIC LOCATION IDENTIFICATION/DATA MANAGEMENT SYSTEM (ALI/DMS) ..... 41

7 WHITE PAGES LISTINGS ..... 42

Rates ..... Exhibit A

Rates ..... Exhibit B

# ACCESS TO NETWORK ELEMENTS AND OTHER SERVICES

## 1 Introduction

1.1 This Attachment sets forth rates, terms and conditions for unbundled network elements (Network Elements) and combinations of Network Elements (Combinations) that BellSouth offers to Comcast Phone for Comcast Phone's provision of Telecommunications Services in accordance with its obligations under Section 251(c)(3) of the Act. Additionally, this Attachment sets forth the rates, terms and conditions for other facilities and services BellSouth makes available to Comcast Phone (Other Services). Additionally, the provision of a particular Network Element or Other Service may require Comcast Phone to purchase other Network Elements or services. In the event of a conflict between this Attachment and any other section or provision of this Agreement, the provisions of this Attachment shall control.

1.1.1 Technically feasible is as defined in the FCC's Rules.

1.2 The rates for each Network Element, Combinations and Other Services are set forth in Exhibits A and B. If no rate is identified in this Agreement, the rate will be as set forth in the applicable BellSouth tariff or as negotiated by the Parties upon request by either Party. If Comcast Phone purchases service(s) from a tariff, all terms and conditions and rates as set forth in such tariff shall apply. A one-month minimum billing period shall apply to all Network Elements, Combinations and Other Services.

1.3 BellSouth shall provide and Comcast Phone may access Network Elements and Other Services in accordance with all applicable FCC and Commission rules and orders, including but not limited to: 47 C.F.R 51.307, 51.309, 51.311, 51.313, 51.315, 51.316, 51.318, 51.319. Comcast Phone may use Network Elements in accordance with 47 C.F.R. 51.309.

1.4 BellSouth shall comply with the requirements as set forth in the technical references within this Attachment 2 which shall be the same as BellSouth provides to itself and other CLECs on a non discriminatory basis.

1.5 Comcast Phone shall not obtain a Network Element for the exclusive provision of mobile wireless services or interexchange services.

1.6 <u>Conversion of Wholesale Services to Network Elements or Network Elements to Wholesale Services.</u> Upon request, BellSouth shall convert a wholesale service, or group of wholesale services, to the equivalent Network Element or Combination that is available to Comcast Phone pursuant to Section 251 of the Act and under this Agreement or convert a Network Element or Combination that is available to Comcast Phone pursuant to Section 251 of the Act and under this Agreement to an equivalent wholesale service or group of wholesale services offered by

BellSouth (collectively "Conversion"). BellSouth shall charge the applicable nonrecurring switch-as-is rates for Conversions to specific Network Elements or Combinations found in Exhibit A. BellSouth shall also charge the same nonrecurring switch-as-is rates when converting from Network Elements or Combinations. Any rate change resulting from the Conversion will be effective as of the next billing cycle following BellSouth's receipt of a complete and accurate Conversion request from Comcast Phone. A Conversion shall be considered termination for purposes of any volume and/or term commitments and/or grandfathered status between Comcast Phone and BellSouth. Any change from a wholesale service/group of wholesale services to a Network Element/Combination, or from a Network Element/Combination to a wholesale service/group of wholesale services, that requires a physical rearrangement will not be considered to be a Conversion for purposes of this Agreement. BellSouth will not require physical rearrangements if the Conversion can be completed through record changes only. Orders for Conversions will be handled in accordance with the guidelines set forth in the Ordering Guidelines and Processes and CLEC Information Packages as referenced in Sections 1.13.1 and 1.13.2 below.

1.7 Except to the extent expressly provided otherwise in this Attachment, Comcast Phone may not maintain unbundled network elements or combinations of unbundled network elements, that are no longer offered pursuant to this Agreement (collectively "Arrangements"). In the event BellSouth determines that Comcast Phone has in place any Arrangements after the Effective Date of this Agreement, BellSouth may disconnect such Arrangements BellSouth will provide Comcast Phone with thirty (30) days written notice to disconnect or convert such Arrangements. If Comcast Phone fails to submit orders to disconnect or convert such Arrangements within such thirty (30) day period, BellSouth will transition such circuits to the equivalent tariffed BellSouth service(s). Those circuits identified and transitioned by BellSouth pursuant to this Section 1.7 shall be subject to all applicable disconnect charges as set forth in this Agreement and the full nonrecurring charges for installation of the equivalent tariffed BellSouth service as set forth in BellSouth's tariffs. The applicable recurring tariff charge shall apply to each circuit as of the Effective Date of this Agreement.

1.8 Prior to submitting an order pursuant to this Agreement for high capacity (DS1 or above) Dedicated Transport or high capacity Loops, Comcast Phone shall undertake a reasonably diligent inquiry to determine whether Comcast Phone is entitled to unbundled access to such Network Elements in accordance with the terms of this Agreement. By submitting any such order, Comcast Phone self-certifies that to the best of Comcast Phone's knowledge, the high capacity Dedicated Transport or high capacity Loop requested is available as a Network Element pursuant to this Agreement. Upon receiving such order, BellSouth shall process the request in reliance upon Comcast Phone's self-certification. To the extent BellSouth believes that such request does not comply with the terms of this Agreement, BellSouth shall seek dispute resolution in accordance with **the**

**General Terms and Conditions of this Agreement.** In the event such dispute is resolved in BellSouth's favor, BellSouth shall bill Comcast Phone the difference between the rates for such circuits pursuant to this Agreement and the applicable nonrecurring and recurring charges for the equivalent tariffed service from the date of installation to the date the circuit is transitioned to the equivalent tariffed service. Within thirty (30) days following a decision finding in BellSouth's favor, Comcast Phone shall submit a spreadsheet identifying those non-compliant circuits to be transitioned to tariffed services or disconnected.

1.9 Comcast Phone may utilize Network Elements and Other Services to provide services in accordance with this Agreement, as long as such services are consistent with industry standards and applicable BellSouth Technical References and BellSouth Guides as they are amended from time to time, and found on BellSouth's Website at http://www.interconnection.bellsouth.com.

1.10 BellSouth will perform Routine Network Modifications (RNM) in accordance with FCC 47 C.F.R. § 51.319 (a)(7) and (e)(4) for Loops and Dedicated Transport provided under this Attachment. If BellSouth has anticipated such RNM and performs them during normal operations and has recovered the costs for performing such modifications through the rates set forth in Exhibit A, then BellSouth shall perform such RNM at no additional charge. RNM shall be performed within the intervals established for the Network Element and subject to the performance measurements and associated remedies set forth in Attachment 9 to the extent such RNM were anticipated in the setting of such intervals. If BellSouth has not anticipated a requested network modification as being a RNM and has not recovered the costs of such RNM in the rates set forth in Exhibit A, then such request will be handled as a project on an individual case basis. BellSouth will provide a price quote for the request and, upon receipt of payment from Comcast Phone, BellSouth shall perform the RNM.

1.11 Commingling of Services

1.11.1 Commingling means the connecting, attaching, or otherwise linking of a Network Element, or a Combination, to one or more Telecommunications Services or facilities that Comcast Phone has obtained at wholesale from BellSouth, or the combining of a Network Element or Combination with one or more such wholesale Telecommunications Services or facilities. Comcast Phone must comply with all rates, terms or conditions applicable to such wholesale Telecommunications Services or facilities.

1.11.2 Subject to the limitations set forth elsewhere in this Attachment, BellSouth shall not deny access to a Network Element or a Combination on the grounds that one or more of the elements: 1) is connected to, attached to, linked to, or combined with such a facility or service obtained from BellSouth; or 2) shares part of BellSouth's network with access services or inputs for mobile wireless services and/or interexchange services.

1.11.3 Unless otherwise agreed to by the Parties, the Network Element portion of a commingled circuit will be billed at the rates set forth in this Agreement and the remainder of the circuit or service will be billed in accordance with BellSouth's tariffed rates or rates set forth in a separate agreement between the Parties.

1.11.4 When multiplexing equipment is attached to a commingled circuit, the multiplexing equipment will be billed from the same agreement or tariff as the higher bandwidth circuit. Central Office Channel Interfaces (COCI) will be billed from the same agreement or tariff as the lower bandwidth circuit.

1.11.5 Notwithstanding any other provision of this Agreement, BellSouth shall not be obligated to commingle or combine Network Elements or Combinations with any service, network element or other offering that it is obligated to make available only pursuant to Section 271 of the Act.

1.12 Terms and conditions for order cancellation charges and Service Date Advancement Charges will apply in accordance with Attachment 6 and are incorporated herein by this reference. The charges shall be as set forth in Exhibit A.

1.13 Ordering Guidelines and Processes

1.13.1 For information regarding Ordering Guidelines and Processes for various Network Elements, Combinations and Other Services, Comcast Phone should refer to the "Guides" section of the BellSouth Interconnection Web site, which is incorporated herein by reference, as amended from time to time. The Web site address is: http//www.interconnection.bellsouth.com/.

1.13.2 Additional information may also be found in the individual CLEC Information Packages, which are incorporated herein by reference, as amended from time to time, located at the "CLEC UNE Products" Web site address: http://www.interconnection.bellsouth.com/guides/html/unes.html.

1.13.3 The provisioning of Network Elements, Combinations and Other Services to Comcast Phone's Collocation Space will require cross-connections within the central office to connect the Network Element, Combinations or Other Services to the demarcation point associated with Comcast Phone's Collocation Space. These cross-connects are separate components that are not considered a part of the Network Element, Combinations or Other Services and, thus, have a separate charge pursuant to Attachment 4.

1.13.4 Testing/Trouble Reporting.

1.13.4.1 Comcast Phone will be responsible for testing and isolating troubles on Network Elements. Comcast Phone must test and isolate trouble to the BellSouth network before reporting the trouble to the UNE Customer Wholesale Interconnection

Network Services (CWINS) Center. Upon request from BellSouth at the time of the trouble report, Comcast Phone will be required to provide the results of the Comcast Phone test which indicate a problem on the BellSouth network.

1.13.4.2 Once Comcast Phone has isolated a trouble to the BellSouth network, and has issued a trouble report to BellSouth, BellSouth will take the actions necessary to repair the Network Element when trouble is found. BellSouth will repair its network facilities to its wholesale customers in the same time frames that BellSouth repairs similar services to its retail End Users.

1.13.4.3 If Comcast Phone reports a trouble on a BellSouth Network Element and no trouble is found in BellSouth's network, BellSouth will charge Comcast Phone at the rates set forth in Exhibit A to this Attachment 2 a Maintenance of Service Charge for any dispatching and testing (both inside and outside the CO) required by BellSouth in order to confirm the Network Element's working status. If Comcast Phone reports the same trouble on the same Network Element or Other Service within thirty (30) calendar days of BellSouth's notification to Comcast of its disposition of the prior trouble, and BellSouth is able to determine that such trouble does exist on BellSouth's network, Comcast Phone shall be credited on the next billing cycle for charges associated with the prior trouble.

1.13.4.4 In the event BellSouth must dispatch to the End User's location more than once due to incorrect or incomplete information provided by Comcast Phone (e.g., incomplete address, incorrect contact name/number, etc.), BellSouth will bill Comcast Phone for each additional dispatch required to repair the Network Element due to the incorrect/incomplete information provided. BellSouth will assess the applicable Maintenance of Service rates at the rates set forth in Exhibit A and B to this Attachment 2.

## 2 Loops

2.1 General. The local loop Network Element is defined as a transmission facility that BellSouth provides pursuant to this Attachment between a distribution frame (or its equivalent) in BellSouth's central office and the loop demarcation point at an End User premises (Loop). Facilities that do not terminate at a demarcation point at an End User premises, including, by way of example, but not limited to, facilities that terminate to another carrier's switch or premises, a cell site, Mobile Switching Center or base station, do not constitute local Loops. The Loop Network Element includes all features, functions, and capabilities of the transmission facilities, including the network interface device, and attached electronics (except those used for the provision of advanced services, such as Digital Subscriber Line Access Multiplexers (DSLAMs)), optronics and intermediate devices (including repeaters and load coils) used to establish the transmission path to the End User's premises, including inside wire owned or controlled by BellSouth. Comcast Phone shall purchase the entire bandwidth of the Loop and, except as required herein or as

otherwise agreed to by the Parties, BellSouth shall not subdivide the frequency of the Loop.

2.1.1 The Loop does not include any packet switched features, functions or capabilities as defined in 47 C.F.R. 51.319.

2.1.2 Fiber to the Home (FTTH) loops are local loops consisting entirely of fiber optic cable, whether dark or lit, serving an End User's premises or, in the case of predominantly residential multiple dwelling units (MDUs), a fiber optic cable, whether dark or lit, that extends to the MDU minimum point of entry (MPOE). Fiber to the Curb (FTTC) loops are local loops consisting of fiber optic cable connecting to a copper distribution plant that is not more than five hundred (500) feet from the End User's premises or, in the case of predominantly residential MDUs, not more than five hundred (500) feet from the MDU's MPOE. The fiber optic cable in a FTTC loop must connect to a copper distribution plant at a serving area interface from which every other copper distribution subloop also is not more than five hundred (500) feet from the respective End User's premises.

2.1.2.1 In new build (Greenfield) areas, where BellSouth has only deployed FTTH/FTTC facilities, BellSouth is under no obligation to provide Loops. FTTH facilities include fiber loops deployed to the MPOE of a MDU that is predominantly residential regardless of the ownership of the inside wiring from the MPOE to each End User in the MDU.

2.1.2.2 In FTTH/FTTC overbuild situations where BellSouth also has copper Loops, BellSouth will make those copper Loops available to Comcast Phone on an unbundled basis, until such time as BellSouth chooses to retire those copper Loops using the FCC's network disclosure requirements. In these cases, BellSouth will offer a 64 kilobits per second (kbps) second voice grade channel over its FTTH/FTTC facilities.

2.1.2.3 Furthermore, in FTTH/FTTC overbuild areas where BellSouth has not yet retired copper facilities, BellSouth is not obligated to ensure that such copper Loops in that area are capable of transmitting signals prior to receiving a request for access to such Loops by Comcast Phone. If a request is received by BellSouth for a copper Loop, and the copper facilities have not yet been retired, BellSouth will restore the copper Loop to serviceable condition if technically feasible. In these instances of Loop orders in an FTTH/FTTC overbuild area, BellSouth's standard Loop provisioning interval will be negotiated, and the order will be handled on a project basis by which the Parties will negotiate the applicable provisioning interval.

2.1.3 A hybrid Loop is a local Loop, composed of both fiber optic cable, usually in the feeder plant, and copper twisted wire or cable, usually in the distribution plant. BellSouth shall provide Comcast Phone with nondiscriminatory access to the time division multiplexing features, functions and capabilities of such hybrid Loop, on

an unbundled basis to establish a complete transmission path between BellSouth's central office and an End User's premises.

2.1.4 Transition for DS1 and DS3 Loop Requirements

2.1.4.1 For purposes of this Section 2, the Transition Period for the Embedded Base of DS1 and DS3 Loops and for the Excess DS1 and DS3 Loops (defined in 2.1.4.3) is the twelve (12) month period beginning March 11, 2005 and ending March 10, 2006.

2.1.4.2 For purposes of this Section 2, Embedded Base means DS1 and DS3 Loops that were in service for Comcast Phone as of March 10, 2005 in those wire centers that, as of such date, met the criteria set forth in 2.1.4.4.1 or 2.1.4.4.2. Subsequent disconnects or loss of End Users shall be removed from the Embedded Base.

2.1.4.3 Excess DS1 and DS3 Loops are those Comcast Phone DS1 and DS3 Loops in service as of March 10, 2005, in excess of the caps set forth in Sections 2.3.6.2 and 2.3.12, respectively. Subsequent disconnects or loss of End Users shall be removed from Excess DS1 and DS3 Loops.

2.1.4.4 For purposes of this Section 2, a Business Line is defined in 47 C.F.R. § 51.5.

2.1.4.5 Notwithstanding anything to the contrary in this Agreement, and except as set forth in Section 2.1.4.12, BellSouth shall make available DS1 and DS3 Loops except as described in this Section 2.1.4 only for Comcast Phone's Embedded Base during the Transition Period:

2.1.4.5.1 DS1 Loops at any location within the service area of a wire center containing 60,000 or more Business Lines and four (4) or more fiber-based collocators.

2.1.4.5.2 DS3 Loops at any location within the service area of a wire center containing 38,000 or more Business Lines and four (4) or more fiber-based collocators.

**2.1.4.6** A list of wire centers meeting the criteria set forth in Sections 2.1.4.5.1 and 2.1.4.5.2 above as of March 10, 2005 (Initial Wire Center List), is available on BellSouth's Interconnection Services Web site at www.interconnection.bellsouth.com. Subject to the dispute resolution procedures set forth in section 1.8 of this Attachment, Comcast Phone may challenge whether any wire center listed by BellSouth qualifies under the FCC rules by submitting a self-certified application conforming to section 1.8 of this Attachment.

2.1.4.7 Notwithstanding the Effective Date of this Agreement, during the Transition Period, the rates for Comcast Phone's Embedded Base of DS1 and DS3 Loops and Comcast Phone's Excess DS1 and DS3 Loops described in this Section 2.1.4 shall be as set forth in Exhibit B.

2.1.4.8 The Transition Period shall apply only to (1) Comcast Phone's Embedded Base and (2) Comcast Phone's Excess DS1 and DS3 Loops. Comcast Phone shall not add new DS1 or DS3 loops as described in this Section 2.1.4 pursuant to this Agreement, except pursuant to the self-certification process as set forth in Section 1.8 of this Attachment and as set forth in Section 2.1.4.12 below.

2.1.4.9 Once a wire center exceeds both of the thresholds set forth in Sections 2.1.4.5.1 and 2.1.4.5.2, no future DS1 Loop unbundling will be required in that wire center.

2.1.4.10 Once a wire center exceeds both of the thresholds set forth in Sections 2.1.4.5.1 and 2.1.4.5.2, no future DS3 Loop unbundling will be required in that wire center.

2.1.4.11 No later than December 9, 2005 Comcast Phone shall submit spreadsheet(s) identifying all of the Embedded Base of circuits and Excess DS1 and DS3 Loops to be either disconnected or converted to other BellSouth services pursuant to Section 1.6. The Parties shall negotiate a project schedule for the Conversion of the Embedded Base and Excess DS1 and DS3 Loops.

2.1.4.11.1 If Comcast Phone fails to submit the spreadsheet(s) specified in Section 2.1.4.11 above for all of its Embedded Base and Excess DS1 and DS3 Loops prior to December 9, 2005, BellSouth will identify Comcast Phone's remaining Embedded Base and Excess DS1 and DS3 Loops, if any, and will transition such circuits to the equivalent tariffed BellSouth service(s). Those circuits identified and transitioned by BellSouth pursuant to this Section 2.1.4.11.1 shall be subject to all applicable disconnect charges as set forth in this Agreement and the full nonrecurring charges for installation of the equivalent tariffed BellSouth service as set forth in BellSouth's tariffs.

2.1.4.11.2 For Embedded Base circuits and Excess DS1 and DS3 Loops converted pursuant to Section 2.1.4.11 or transitioned pursuant to 2.1.4.11.1, the applicable recurring tariff charge shall apply to each circuit as of the earlier of the date each circuit is converted or transitioned, as applicable, or March 11, 2006.

2.1.4.12 <u>Modifications and Updates to the Wire Center List and Subsequent Transition Periods</u>

2.1.4.12.1 In the event BellSouth identifies additional wire centers that meet the criteria set forth in Section 2.1.4.5, but that were not included in the Initial Wire Center List, BellSouth shall include such additional wire centers in a carrier notification letter (CNL). Each such list of additional wire centers shall be considered a "Subsequent Wire Center List".

2.1.4.12.2 Effective ten (10) business days after the date of a BellSouth CNL providing a Subsequent Wire Center List, BellSouth shall not be required to unbundle DS1 and/or DS3 Loops, as applicable, in such additional wire center(s), except pursuant to the self-certification process as set forth in Section 1.8 of this Attachment.

2.1.4.12.3 For purposes of Section 2.1.4.12, BellSouth shall make available DS1 and DS3 Loops that were in service for Comcast Phone in a wire center on the Subsequent Wire Center List as of the tenth ($10^{th}$) business day after the date of BellSouth's CNL identifying the Subsequent Wire Center List (Subsequent Embedded Base) until ninety (90) days after the tenth (10th) business day from the date of BellSouth's CNL identifying the Subsequent Wire Center List (Subsequent Transition Period).

2.1.4.12.4 Subsequent disconnects or loss of End Users shall be removed from the Subsequent Embedded Base.

2.1.4.12.5 The rates set forth in Exhibit B shall apply to the Subsequent Embedded Base during the Subsequent Transition Period.

2.1.4.12.6 No later than forty (40) days from BellSouth's CNL identifying the Subsequent Wire Center List, Comcast Phone shall submit a spreadsheet(s) identifying the Subsequent Embedded Base of circuits to be disconnected or converted to other BellSouth services. The Parties shall negotiate a project schedule for the Conversion of the Subsequent Embedded Base.

2.1.4.12.6.1 If Comcast Phone fails to submit the spreadsheet(s) specified in Section 2.1.4.12.6 above for all of its Subsequent Embedded Base within forty (40) days after the date of BellSouth's CNL identifying the Subsequent Wire Center List, BellSouth will identify Comcast Phone's remaining Subsequent Embedded Base, if any, and will transition such circuits to the equivalent tariffed BellSouth service(s). Those circuits identified and transitioned by BellSouth shall be subject to the applicable disconnect charges as set forth in this Agreement and the full nonrecurring charges for installation of the equivalent tariffed BellSouth service as set forth in BellSouth's tariffs.

2.1.4.12.6.2 For Subsequent Embedded Base circuits converted pursuant to Section 2.1.4.12.6 or transitioned pursuant to Section 2.1.4.12.6.1, the applicable recurring tariff charges shall apply as of the earlier of the date each circuit is converted or transitioned, as applicable, or the first day after the end of the Subsequent Transition Period.

2.1.4 Where facilities are available, BellSouth will install Loops in compliance with BellSouth's Products and Services Interval Guide available at BellSouth's Web site: http://www.interconnection.bellsouth.com. For orders of fifteen (15) or more Loops, the installation and any applicable OC as described below will be handled on a project basis, and the intervals will be set by the BellSouth project manager for that order. When Loops require a Service Inquiry (SI) prior to issuing the order to determine if facilities are available, the interval for the SI process is separate from the installation interval.

2.1.5 The Loop shall be provided to Comcast Phone in accordance with BellSouth's TR73600 Unbundled Local Loop Technical Specification and applicable industry standard technical references.

2.1.6 BellSouth will only provision, maintain and repair the Loops to the standards that are consistent with the type of Loop ordered.

2.1.7.1 When a BellSouth technician is required to be dispatched to provision the Loop, BellSouth will tag the Loop with the Circuit ID number and the name of the ordering CLEC. When a dispatch is not required to provision the Loop, BellSouth will tag the Loop on the next required visit to the End User's location. If Comcast Phone wants to ensure the Loop is tagged during the provisioning process for Loops that may not require a dispatch (e.g., UVL-SL1, UVL-SL2, and UCL-ND), Comcast Phone may order Loop Tagging. Rates for Loop Tagging are as set forth in Exhibit A.

2.1.7.2 For voice grade Loop orders (or orders for Loops intended to provide voice grade services), Comcast Phone shall have dial-tone available for that Loop forty-eight (48) hours prior to the Loop order completion due date.

2.1.8 <u>Order Coordination (OC) and Order Coordination-Time Specific (OC-TS)</u>

2.1.8.1 OC allows BellSouth and Comcast Phone to coordinate the installation of the SL2 Loops, Unbundled Digital Loops (UDL) and other Loops where OC may be purchased as an option, to Comcast Phone's facilities to limit End User service outage. OC is available when the Loop is provisioned over an existing circuit that is currently providing service to the End User. OC for physical conversions will be scheduled at BellSouth's discretion during normal working hours on the committed due date. OC shall be provided in accordance with the chart set forth below.

2.1.8.2 OC-TS allows Comcast Phone to order a specific time for OC to take place. BellSouth will make commercially reasonable efforts to accommodate Comcast Phone's specific conversion time request. However, BellSouth reserves the right to negotiate with Comcast Phone a conversion time based on load and appointment control when necessary. This OC-TS is a chargeable option for all Loops except Unbundled Copper Loops (UCL) and is billed in addition to the OC charge. Comcast Phone may specify a time between 9:00 a.m. and 4:00 p.m. (location time) Monday through Friday (excluding holidays). If Comcast Phone specifies a time outside this window, or selects a time or quantity of Loops that requires BellSouth technicians to work outside normal work hours, overtime charges will apply in addition to the OC and OC-TS charges. Overtime charges will be applied based on the amount of overtime worked and in accordance with the rates established in BellSouth's Access Services Tariff, Section E13.2, for each state. The OC-TS charges for an order due on the same day at the same location will be applied on a per Local Service Request (LSR) basis.

2.1.9

| | Order Coordination (OC) | Order Coordination – Time Specific (OC-TS) | Test Points | DLR | Charge for Dispatch and Testing if No Trouble Found |
|---|---|---|---|---|---|
| **SL-1**<br><br>**(Non-Designed)** | Chargeable Option | Chargeable Option | Not available | Chargeable Option – ordered as Engineering Information Document | Charged for Dispatch inside and outside Central Office |
| **UCL-ND**<br><br>**(Non-Designed)** | Chargeable Option | Not Available | Not Available | Chargeable Option – ordered as Engineering Information Document | Charged for Dispatch inside and outside Central Office |
| **Unbundled Voice Loops - SL-2 (including 2- and 4-wire UVL) (Designed)** | Included | Chargeable Option | Included | Included | Charged for Dispatch outside Central Office |
| **Unbundled Digital Loop (Designed)** | Included | Chargeable Option | Included (where appropriate) | Included | Charged for Dispatch outside Central Office |
| **Unbundled Copper Loop (Designed)** | Chargeable in accordance with Section 2 | Not available | Included | Included | Charged for Dispatch outside Central Office |
| For UVL-SL1 and UCLs, Comcast Phone must order and will be billed for both OC and OC-TS if requesting OC-TS. | | | | | |

2.1.9 <u>CLEC to CLEC Conversions for Unbundled Loops</u>

2.1.9.1 The CLEC to CLEC conversion process for Loops may be used by Comcast Phone when converting an existing Loop from another CLEC for the same End User. The Loop type being converted must be included in Comcast Phone's Interconnection Agreement before requesting a conversion.

2.1.9.2 To utilize the CLEC to CLEC conversion process, the Loop being converted must be the same Loop type with no requested changes to the Loop, must serve the

same End User location from the same serving wire center, and must not require an outside dispatch to provision.

2.1.9.3 The Loops converted to Comcast Phone pursuant to the CLEC to CLEC conversion process shall be provisioned in the same manner and with the same functionality and options as described in this Agreement for the specific Loop type.

2.1.10 Bulk Migration

2.1.10.1 BellSouth will make available to Comcast Phone a Bulk Migration process pursuant to which Comcast Phone may request to migrate port/loop combinations, provisioned pursuant to a separate agreement between the parties, to Loops (UNE-L). The Bulk Migration process may be used if such loop/port combinations are (1) associated with two (2) or more Existing Account Telephone Numbers (EATNs); and (2) located in the same Central Office. The terms and conditions for use of the Bulk Migration process are described in the BellSouth CLEC Information Package, incorporated herein by reference as it may be amended from time to time. The CLEC Information Package is located at www.interconnection.bellsouth.com/guides/html/unes.html. The rates for the Bulk Migration process shall be the nonrecurring rates associated with the Loop type being requested on the Bulk Migration, as set forth in Exhibit A. Additionally, Operations Support Systems (OSS) charges will also apply. Loops connected to Integrated Digital Loop Carrier (IDLC) systems will be migrated pursuant to Section 2.6 below.

2.1.10.2 Should Comcast Phone request migration for two (2) or more EATNs containing fifteen (15) or more circuits, Comcast Phone must use the Bulk Migration process referenced in 2.1.11.1 above.

2.2 Unbundled Voice Loops (UVLs)

2.2.1 BellSouth shall make available the following UVLs:

2.2.1.1 2-wire Analog Voice Grade Loop – SL1 (Non-Designed)

2.2.1.2 2-wire Analog Voice Grade Loop – SL2 (Designed)

2.2.1.3 4-wire Analog Voice Grade Loop (Designed)

2.2.2 UVL may be provisioned using any type of facility that will support voice grade services. This may include loaded copper, non-loaded copper, digital loop carrier systems, fiber/copper combination (hybrid loop) or a combination of any of these facilities. BellSouth, in the normal course of maintaining, repairing, and configuring its network, may also change the facilities that are used to provide any given voice grade circuit. This change may occur at any time. In these situations, BellSouth will only ensure that the newly provided facility will support voice grade services. BellSouth will not guarantee that Comcast Phone will be able to continue

to provide any advanced services over the new facility. BellSouth will offer UVL in two different service levels - Service Level One (SL1) and Service Level Two (SL2).

2.2.3 Unbundled Voice Loop - SL1 (UVL-SL1). Loops are 2-wire Loop start circuits, will be non-designed, and will not have remote access test points. OC will be offered as a chargeable option on SL1 Loops when reuse of existing facilities has been requested by Comcast Phone, however, OC is always required on UCLs that involve the reuse of facilities that are currently providing service. Comcast Phone may also order OC-TS when a specified conversion time is requested. OC-TS is a chargeable option for any coordinated order and is billed in addition to the OC charge. An Engineering Information (EI) document can be ordered as a chargeable option. The EI document provides Loop Make-Up information which is similar to the information normally provided in a Design Layout Record (DLR). Upon issuance of a non-coordinated order in the service order system, SL1 Loops will be activated on the due date in the same manner and time frames that BellSouth normally activates POTS-type Loops for its End Users.

2.2.4 For an additional charge BellSouth will make available Loop Testing so that Comcast Phone may request further testing on new UVL-SL1 Loops. Rates for Loop Testing are as set forth in Exhibit A.

2.2.5 Unbundled Voice Loop – SL2 (UVL-SL2). Loops may be 2-wire or 4-wire circuits, shall have remote access test points, and will be designed with a DLR provided to Comcast Phone. SL2 circuits can be provisioned with loop start, ground start or reverse battery signaling. OC is provided as a standard feature on SL2 Loops. The OC feature will allow Comcast Phone to coordinate the installation of the Loop with the disconnect of an existing customer's service and/or number portability service. In these cases, BellSouth will perform the order conversion with standard order coordination at its discretion during normal work hours.

2.3 Unbundled Digital Loops

2.3.1 BellSouth will offer UDLs. UDLs are service specific, will be designed, will be provisioned with test points (where appropriate), and will come standard with OC and a DLR. The various UDLs are intended to support a specific digital transmission scheme or service.

2.3.2 BellSouth shall make available the following UDLs, subject to restrictions set forth herein:

2.3.2.1 2-wire Unbundled ISDN Digital Loop

2.3.2.2 2-wire Unbundled ADSL Compatible Loop

2.3.2.3 2-wire Unbundled HDSL Compatible Loop

2.3.2.4 4-wire Unbundled HDSL Compatible Loop

2.3.2.5 4-wire Unbundled DS1 Digital Loop

2.3.2.6 4-wire Unbundled Digital Loop/DS0 – 64 kbps, 56 kbps and below

2.3.2.7 DS3 Loop

2.3.2.8 STS-1 Loop

2.3.3 2-wire Unbundled ISDN Digital Loops. These will be provisioned according to industry standards for 2-Wire Basic Rate ISDN services and will come standard with a test point, OC, and a DLR. Comcast Phone will be responsible for providing BellSouth with a Service Profile Identifier (SPID) associated with a particular ISDN-capable Loop and End User. With the SPID, BellSouth will be able to adequately test the circuit and ensure that it properly supports ISDN service.

2.3.4 2-wire ADSL-Compatible Loop. This is a designed Loop that is provisioned according to Revised Resistance Design (RRD) criteria and may be up to 18,000 feet long and may have up to 6,000 feet of bridged tap (inclusive of Loop length). The Loop is a 2-wire circuit and will come standard with a test point, OC, and a DLR.

2.3.5 2-wire or 4-wire HDSL-Compatible Loop. This is a designed Loop that meets Carrier Serving Area (CSA) specifications, may be up to 12,000 feet long and may have up to 2,500 feet of bridged tap (inclusive of Loop length). It may be a 2-wire or 4-wire circuit and will come standard with a test point, OC, and a DLR.

2.3.6 4-wire Unbundled DS1 Digital Loop.

2.3.6.1 This is a designed 4-wire Loop that is provisioned according to industry standards for DS1 or Primary Rate ISDN services and will come standard with a test point, OC, and a DLR. A DS1 Loop may be provisioned over a variety of loop transmission technologies including copper, HDSL-based technology or fiber optic transport systems. It will include a 4-wire DS1 Network Interface at the End User's location. For purposes of this Agreement, including the transition of DS1 and DS3 Loops described in Section 2.1.4 above, DS1 Loops include 2-wire and 4-2ire copper Loops capable of providing high-bit rate digital subscriber line services, such as 2-wire and 4-wire HDSL Compatible Loops.

2.3.6.2 BellSouth shall not provide more than ten (10) unbundled DS1 Loops to Comcast Phone at any single building in which DS1 Loops are available as unbundled Loops.

2.3.7 4-wire Unbundled Digital/DS0 Loop. These are designed 4-wire Loops that may be configured as 64kbps, 56kbps, 19kbps, and other sub-rate speeds associated with digital data services and will come standard with a test point, OC, and a DLR.

2.3.8 DS3 Loop. DS3 Loop is a two-point digital transmission path which provides for simultaneous two-way transmission of serial, bipolar, return-to-zero isochronous digital electrical signals at a transmission rate of 44.736 megabits per second (Mbps) that is dedicated to the use of the ordering CLEC in its provisioning of local exchange and associated exchange access services. It may provide transport for twenty-eight (28) DS1 channels, each of which provides the digital equivalent of twenty-four (24) analog voice grade channels. The interface to unbundled dedicated DS3 transport is a metallic-based electrical interface.

2.3.9 STS-1 Loop. STS-1 Loop is a high-capacity digital transmission path with SONET VT1.5 mapping that is dedicated for the use of the ordering customer for the purpose of provisioning local exchange and associated exchange access services. It is a two-point digital transmission path which provides for simultaneous two-way transmission of serial bipolar return-to-zero synchronous digital electrical signals at a transmission rate of 51.84 Mbps. It may provide transport for twenty-eight (28) DS1 channels, each of which provides the digital equivalent of twenty-four (24) analog voice grade channels. The interface to unbundled dedicated STS-1 transport is a metallic-based electrical interface.

2.3.10 Both DS3 Loop and STS-1 Loop require a SI in order to ascertain availability.

2.3.11 DS3 services come with a test point and a DLR. Mileage is airline miles, rounded up and a minimum of one mile applies. BellSouth's TR73501 LightGate®Service Interface and Performance Specifications, Issue D, June 1995 applies to DS3 services.

2.3.12 Comcast Phone may obtain a maximum of a single Unbundled DS3 Loop to any single building in which DS3 Loops are available as Unbundled Loops.

2.4 Unbundled Copper Loops (UCL).

2.4.1 BellSouth shall make available UCLs. The UCL is a copper twisted pair Loop that is unencumbered by any intervening equipment (e.g., filters, load coils, range extenders, digital loop carrier, or repeaters) and is not intended to support any particular telecommunications service. The UCL will be offered in two types – Designed and Non-Designed.

2.4.2 Unbundled Copper Loop – Designed (UCL-D)

2.4.2.1 The UCL-D will be provisioned as a dry copper twisted pair (2-wire or 4-wire) Loop that is unencumbered by any intervening equipment (e.g., filters, load coils, range extenders, digital loop carrier, or repeaters).

2.4.2.2 A UCL-D will be 18,000 feet or less in length and is provisioned according to Resistance Design parameters, may have up to 6,000 feet of bridged tap and will have up to 1300 Ohms of resistance.

2.4.2.3 The UCL-D is a designed circuit, is provisioned with a test point, and comes standard with a DLR. OC is a chargeable option for a UCL-D; however, OC is always required on UCLs where a reuse of existing facilities has been requested by Comcast Phone.

2.4.2.4 These Loops are not intended to support any particular services and may be utilized by Comcast Phone to provide a wide-range of telecommunications services as long as those services do not adversely affect BellSouth's network. This facility will include a Network Interface Device (NID) at the customer's location for the purpose of connecting the Loop to the customer's inside wire.

2.4.3 Unbundled Copper Loop – Non-Designed (UCL-ND)

2.4.3.1 The UCL–ND is provisioned as a dedicated 2-wire metallic transmission facility from BellSouth's Main Distribution Frame (MDF) to a customer's premises (including the NID). The UCL-ND will be a "dry copper" facility in that it will not have any intervening equipment such as load coils, repeaters, or digital access main lines (DAMLs), and may have up to 6,000 feet of bridged tap between the End User's premises and the serving wire center. The UCL-ND typically will be 1300 Ohms resistance and in most cases will not exceed 18,000 feet in length, although the UCL-ND will not have a specific length limitation. For Loops less than 18,000 feet and with less than 1300 Ohms resistance, the Loop will provide a voice grade transmission channel suitable for loop start signaling and the transport of analog voice grade signals. The UCL-ND will not be designed and will not be provisioned with either a DLR or a test point.

2.4.3.2 The UCL-ND facilities may be mechanically assigned using BellSouth's assignment systems. Therefore, the Loop Makeup (LMU) process is not required to order and provision the UCL-ND. However, Comcast Phone can request LMU for which additional charges would apply.

2.4.3.3 For an additional charge, BellSouth also will make available Loop Testing so that Comcast Phone may request further testing on the UCL-ND. Rates for Loop Testing are as set forth in Exhibit A.

2.4.3.4 UCL-ND Loops are not intended to support any particular service and may be utilized by Comcast Phone to provide a wide-range of telecommunications services as long as those services do not adversely affect BellSouth's network. The UCL-ND will include a NID at the customer's location for the purpose of connecting the Loop to the customer's inside wire.

2.4.3.5 OC will be provided as a chargeable option and may be utilized when the UCL-ND provisioning is associated with the reuse of BellSouth facilities. OC-TS does not apply to this product.

2.4.3.6 Comcast Phone may use BellSouth's Unbundled Loop Modification (ULM) offering to remove excessive bridged taps and/or load coils from any copper Loop within the BellSouth network. Therefore, some Loops that would not qualify as UCL-ND could be transformed into Loops that do qualify, using the ULM process.

2.5 Unbundled Loop Modifications (Line Conditioning)

2.5.1 Line Conditioning is defined as routine network modification that BellSouth regularly undertakes to provide xDSL services to its own customers. This may include the removal of any device, from a copper Loop or copper Subloop that may diminish the capability of the Loop or Subloop to deliver high-speed switched wireline telecommunications capability, including xDSL service. Such devices include, load coils, excessive bridged taps, low pass filters, and range extenders. Excessive bridged taps are bridged taps that serves no network design purpose and that are beyond the limits set according to industry standards and/or the BellSouth's TR73600 Unbundled Local Loop Technical Specification.

2.5.2 BellSouth will remove load coils only on copper Loops and Subloops that are less than 18,000 feet in length.

2.5.3 For any copper loop being ordered by Comcast Phone which has over six thousand (6,000) feet of combined bridged tap will be modified, upon request from Comcast Phone, so that the loop will have a maximum of six thousand (6,000) feet of bridged tap. This modification will be performed at no additional charge to Comcast Phone. Loop conditioning orders that require the removal of bridged tap that serves no network design purpose on a copper Loop that will result in a combined total of bridged tap between two thousand five hundred (2,500) and six thousand (6,000) feet will be performed at the rates set forth in Exhibit A.

2.5.4 Comcast Phone may request removal of any unnecessary and non-excessive bridged tap (bridged tap between zero (0 ) and two thousand five hundred (2,500) feet which serves no network design purpose), at rates pursuant to BellSouth's SC Process as mutually agreed to by the Parties.

2.5.5 Rates for ULM are as set forth in Exhibit A.

2.5.6 BellSouth will not modify a Loop in such a way that it no longer meets the technical parameters of the original Loop type (e.g., voice grade, ADSL, etc.) being ordered.

2.5.7 If Comcast Phone requests ULM on a reserved facility for a new Loop order, BellSouth may perform a pair change and provision a different Loop facility in lieu of the reserved facility with ULM if feasible. The Loop provisioned will meet or exceed specifications of the requested Loop facility as modified. Comcast Phone will not be charged for ULM if a different Loop is provisioned. For Loops that require a DLR or its equivalent, BellSouth will provide LMU detail of the Loop provisioned.

2.5.8 Comcast Phone shall request Loop make up information pursuant to this Attachment prior to submitting a service inquiry and/or a LSR for the Loop type that Comcast Phone desires BellSouth to condition.

2.5.9 When requesting ULM for a Loop that BellSouth has previously provisioned for Comcast Phone, Comcast Phone will submit a SI to BellSouth. If a spare Loop facility that meets the Loop modification specifications requested by Comcast Phone is available at the location for which the ULM was requested, Comcast Phone will have the option to change the Loop facility to the qualifying spare facility rather than to provide ULM. In the event that BellSouth changes the Loop facility in lieu of providing ULM, Comcast Phone will not be charged for ULM but will only be charged the service order charges for submitting an order.

2.6 Loop Provisioning Involving IDLC

2.6.1 Where Comcast Phone has requested an Unbundled Loop and BellSouth uses IDLC systems to provide the local service to the End User and BellSouth has a suitable alternate facility available, BellSouth will make such alternative facilities available to Comcast Phone. If a suitable alternative facility is not available, then to the extent it is technically feasible, BellSouth will implement one of the following alternative arrangements for Comcast Phone (e.g., hairpinning):

1. Roll the circuit(s) from the IDLC to any spare copper that exists to the customer premises.
2. Roll the circuit(s) from the IDLC to an existing DLC that is not integrated.
3. If capacity exists, provide "side-door" porting through the switch.
4. If capacity exists, provide "Digital Access Cross-Connect System (DACS)-door" porting (if the IDLC routes through a DACS prior to integration into the switch).

2.6.2 Arrangements 3 and 4 above require the use of a designed circuit. Therefore, non-designed Loops such as the SL1 voice grade and UCL-ND may not be ordered in these cases.

2.6.3 If no alternate facility is available, and upon request from Comcast Phone, and if agreed to by both Parties, BellSouth may utilize its SC process to determine the additional costs required to provision facilities. Comcast Phone will then have the option of paying the one-time SC rates to place the Loop.

2.7 Network Interface Device

2.7.1 The NID is defined as any means of interconnection of the End User's customer premises wiring to BellSouth's distribution plant, such as a cross-connect device used for that purpose. The NID is a single line termination device or that portion of a multiple line termination device required to terminate a single line or circuit at the premises. The NID features two independent chambers or divisions that separate the service provider's network from the End User's premises wiring. Each chamber or division contains the appropriate connection points or posts to which the service provider and the End User each make their connections. The NID provides a protective ground connection and is capable of terminating cables such as twisted pair cable.

2.7.2 BellSouth shall permit Comcast Phone to connect Comcast Phone's Loop facilities to the End User's customer premises wiring through the BellSouth NID or at any other technically feasible point.

2.7.3 Access to NID

2.7.3.1 Comcast Phone may access the End User's premises wiring by any of the following means and Comcast Phone shall not disturb the existing form of electrical protection and shall maintain the physical integrity of the NID:

2.7.3.1.1 BellSouth shall allow Comcast Phone to connect its Loops directly to BellSouth's multi-line residential NID enclosures that have additional space and are not used by BellSouth or any other telecommunications carriers to provide service to the premises;

2.7.3.1.2 Where an adequate length of the End User's customer premises wiring is present and environmental conditions permit, either Party may remove the End User premises wiring from the other Party's NID and connect such wiring to that Party's own NID;

2.7.3.1.3 Either Party may enter the subscriber access chamber or dual chamber NID enclosures for the purpose of extending a cross-connect or spliced jumper wire from the customer premises wiring through a suitable "punch-out" hole of such NID enclosures; or

2.7.3.1.4 Comcast Phone may request BellSouth to make other rearrangements to the End User premises wiring terminations or terminal enclosure on a time and materials cost basis.

2.7.3.2 In no case shall either Party remove or disconnect the other Party's loop facilities from either Party's NIDs, enclosures, or protectors unless the applicable Commission has expressly permitted the same and the disconnecting Party provides prior notice to the other Party. In such cases, it shall be the responsibility

of the Party disconnecting loop facilities to leave undisturbed the existing form of electrical protection and to maintain the physical integrity of the NID. It will be Comcast Phone's responsibility to ensure there is no safety hazard, and Comcast Phone will hold BellSouth harmless for any liability associated with the removal of the BellSouth Loop from the BellSouth NID. Furthermore, it shall be the responsibility of the disconnecting Party, once the other Party's loop has been disconnected from the NID, to reconnect the disconnected loop to a nationally recognized testing laboratory listed station protector, which has been grounded as per Article 800 of the National Electrical Code. If no spare station protector exists in the NID, the disconnected loop must be appropriately cleared, capped and stored.

2.7.3.3 Comcast Phone shall not remove or disconnect ground wires from BellSouth's NIDs, enclosures, or protectors.

2.7.3.4 Comcast Phone shall not remove or disconnect NID modules, protectors, or terminals from BellSouth's NID enclosures.

2.7.3.5 Due to the wide variety of NID enclosures and outside plant environments, BellSouth will work with Comcast Phone to develop specific procedures to establish the most effective means of implementing this section if the procedures set forth herein do not apply to the NID in question.

2.7.4 Technical Requirements

2.7.4.1 The NID shall provide an accessible point of interconnection and shall maintain a connection to ground.

2.7.4.2 If an existing NID is accessed, it shall be capable of transferring electrical analog or digital signals between the End User's customer premises and the distribution media and/or cross-connect to Comcast Phone's NID.

2.7.4.3 Existing BellSouth NIDs will be operational and provided in working condition. Where such NID is not functioning properly, and to the extent it is technically feasible, BellSouth shall repair the NID at BellSouth's expense. Comcast Phone may request BellSouth to do additional work to the NID on a time and material basis, BST – cost recovery is included in the retail service which includes the NID When Comcast Phone deploys its own local loops in a multiple-line termination device, Comcast Phone shall specify the quantity of NID connections that it requires within such device.

2.8 Subloop Elements.

2.8.1 Where facilities permit, BellSouth shall offer access to its Unbundled Subloop (USL) elements as specified herein.

2.8.2 Unbundled Subloop Distribution (USLD)

2.8.2.1 The USLD facility is a dedicated transmission facility that BellSouth provides from an End User's point of demarcation to a BellSouth cross-connect device. The BellSouth cross-connect device may be located within a remote terminal (RT) or a stand-alone cross-box in the field or in the equipment room of a building. The USLD media is a copper twisted pair that can be provisioned as a 2-wire or 4-wire facility. BellSouth will make available the following subloop distribution offerings where facilities exist:

USLD – Voice Grade (USLD-VG)
Unbundled Copper Subloop (UCSL)
USLD – Intrabuilding Network Cable (USLD-INC (aka riser cable))

2.8.2.2 USLD-VG is a copper subloop facility from the cross-box in the field up to and including the point of demarcation at the End User's premises and may have load coils.

2.8.2.3 UCSL is a copper facility eighteen thousand (18,000) feet or less in length provided from the cross-box in the field up to and including the End User's point of demarcation. If available, this facility will not have any intervening equipment such as load coils between the End User and the cross-box.

2.8.2.3.1 If Comcast Phone requests a UCSL and it is not available, Comcast Phone may request the copper Subloop facility be modified pursuant to the ULM process to remove load coils and/or excessive bridged taps. If load coils and/or excessive bridged taps are removed, the facility will be classified as a UCSL.

2.8.2.4 USLD-INC is the distribution facility owned or controlled by BellSouth inside a building or between buildings on the same property that is not separated by a public street or road. USLD-INC includes the facility from the cross-connect device in the building equipment room up to and including the point of demarcation at the End User's premises.

2.8.2.4.1 Upon request for USLD-INC from Comcast Phone, BellSouth will install a cross-connect panel in the building equipment room for the purpose of accessing USLD-INC pairs from a building equipment room. The cross-connect panel will function as a single point of interconnection (SPOI) for USLD-INC and will be accessible by multiple carriers as space permits. BellSouth will place cross-connect blocks in twenty five (25) pair increments for Comcast Phone's use on this cross-connect panel. Comcast Phone will be responsible for connecting its facilities to the twenty five (25) pair cross-connect block(s).

2.8.2.5 For access to Voice Grade USLD and UCSL, Comcast Phone shall install a cable to the BellSouth cross-box pursuant to the terms and conditions for physical collocation for remote sites set forth in Attachment 4. This cable would be

connected by a BellSouth technician within the BellSouth cross-box during the set-up process. Comcast Phone's cable pairs can then be connected to BellSouth's USL within the BellSouth cross-box by the BellSouth technician.

2.8.2.6 Through the SI process, BellSouth will determine whether access to USLs at the location requested by Comcast Phone is technically feasible and whether sufficient capacity exists in the cross-box. If existing capacity is sufficient to meet Comcast Phone's request, then BellSouth will perform the site set-up as described in the CLEC Information Package, located at BellSouth's Interconnection Web site address: http://www.interconnection.bellsouth.com/products/html/unes.html.

2.8.2.7 The site set-up must be completed before Comcast Phone can order Subloop pairs. For the site set-up in a BellSouth cross-connect box in the field, BellSouth will perform the necessary work to splice Comcast Phone's cable into the cross-connect box. For the site set-up inside a building equipment room, BellSouth will perform the necessary work to install the cross-connect panel and the connecting block(s) that will be used to provide access to the requested USLs.

2.8.2.8 Once the site set-up is complete, Comcast Phone will request Subloop pairs through submission of a LSR form to the Local Carrier Service Center (LCSC). OC is required with USL pair provisioning when Comcast Phone requests reuse of an existing facility, and the OC charge shall be billed in addition to the USL pair rate. For expedite requests by Comcast Phone for Subloop pairs, expedite charges will apply for intervals less than five (5) days.

2.8.2.9 USLs will be provided in accordance with BellSouth's TR73600 Unbundled Local Loop Technical Specifications.

2.8.3 <u>Unbundled Network Terminating Wire (UNTW)</u>

2.8.3.1 UNTW is unshielded twisted copper wiring that is used to extend circuits from an intra-building network cable terminal or from a building entrance terminal to an individual End User's point of demarcation. It is the final portion of the Loop that in multi-subscriber configurations represents the point at which the network branches out to serve individual subscribers.

2.8.3.2 This element will be provided in MDUs and/or Multi-Tenants Units (MTUs) where either Party owns wiring all the way to the End User's premises. Neither Party will provide this element in locations where the property owner provides its own wiring to the End User's premises, where a third party owns the wiring to the End User's premises.

2.8.3.3 <u>Requirements</u>

2.8.3.3.1 On a multi-unit premises, upon request of the other Party (Requesting Party), the Party owning the network terminating wire (Provisioning Party) will provide

access to UNTW pairs on an Access Terminal that is suitable for use by multiple carriers at each Garden Terminal or Wiring Closet.

2.8.3.3.2 The Provisioning Party shall not be required to install new or additional NTW beyond existing NTW to provision the services of the Requesting Party.

2.8.3.3.3 In existing MDUs and/or MTUs in which BellSouth does not own or control wiring (INC/NTW) to the End Users premises, and Comcast Phone does own or control such wiring, Comcast Phone will install UNTW Access Terminals for BellSouth under the same terms and conditions as BellSouth provides UNTW Access Terminals to Comcast Phone.

2.8.3.3.4 In situations in which BellSouth activates a UNTW pair, BellSouth will compensate Comcast Phone for each pair activated commensurate to the price specified in Comcast Phone's Agreement.

2.8.3.3.5 Upon receipt of the UNTW SI requesting access to the Provisioning Party's UNTW pairs at a multi-unit premises, representatives of both Parties will participate in a meeting at the site of the requested access. The purpose of the site visit will include discussion of the procedures for installation and location of the Access Terminals. By request of the Requesting Party, an Access Terminal will be installed either adjacent to each of the Provisioning Party's Garden Terminal or inside each Wiring Closet. The Requesting Party will deliver and connect its central office facilities to the UNTW pairs within the Access Terminal. The Requesting Party may access any available pair on an Access Terminal. A pair is available when a pair is not being utilized to provide service or where the End User has requested a change in its local service provider to the Requesting Party. Prior to connecting the Requesting Party's service on a pair previously used by the Provisioning Party, the Requesting Party is responsible for ensuring the End User is no longer using the Provisioning Party's service or another CLEC's service before accessing UNTW pairs.

2.8.3.3.6 Access Terminal installation intervals will be established on an individual case basis.

2.8.3.3.7 The Requesting Party is responsible for obtaining the property owner's permission for the Provisioning Party to install an Access Terminal(s) on behalf of the Requesting Party. The submission of the SI by the Requesting Party will serve as certification by the Requesting Party that such permission has been obtained. If the property owner objects to Access Terminal installations that are in progress or within thirty (30) days after completion and demands removal of Access Terminals, the Requesting Party will be responsible for costs associated with removing Access Terminals and restoring the property to its original state prior to Access Terminals being installed.

2.8.3.3.8 The Requesting Party shall indemnify and hold harmless the Provisioning Party against any claims of any kind that may arise out of the Requesting Party's failure to obtain the property owner's permission. The Requesting Party will be billed for nonrecurring and recurring charges for accessing UNTW pairs at the time the Requesting Party activates the pair(s). The Requesting Party will notify the Provisioning Party within five (5) business days of activating UNTW pairs using the LSR form.

2.8.3.3.9 If a trouble exists on a UNTW pair, the Requesting Party may use an alternate spare pair that serves that End User if a spare pair is available. In such cases, the Requesting Party will re-terminate its existing jumper from the defective pair to the spare pair. Alternatively, the Requesting Party will isolate and report troubles in the manner specified by the Provisioning Party. The Requesting Party must tag the UNTW pair that requires repair. If the Provisioning Party dispatches a technician on a reported trouble call and no UNTW trouble is found, the Provisioning Party will charge Requesting Party for time spent on the dispatch and testing the UNTW pair(s).

2.8.3.3.10 If the Requesting Party initiates the Access Terminal installation and the Requesting Party has not activated at least five (5) of the capacity of the Access Terminal installed pursuant to the Requesting Party's request for an Access Terminal within six (6) months of installation of the Access Terminal, the Provisioning Party will bill the Requesting Party a nonrecurring charge (NRC) equal to the actual cost of provisioning the Access Terminal.

2.8.3.3.11 If the Provisioning Party determines that the Requesting Party is using the UNTW pairs without reporting the activation of the pairs, the Requesting Party will be billed for the use of that pair back to the date the End User began receiving service from the Requesting Party at that location. Upon request, the Requesting Party will provide copies of its billing record to substantiate such date. If the Requesting Party fails to provide such records, then the Provisioning Party will bill the Requesting Party back to the date of the Access Terminal installation.

2.9 Loop Makeup

2.9.1 Description of Service

2.9.1.1 BellSouth shall make available to Comcast Phone LMU information with respect to Loops that are required to be unbundled under this Agreement so that Comcast Phone can make an independent judgment about whether the Loop is capable of supporting the advanced services equipment Comcast Phone intends to install and the services Comcast Phone wishes to provide. LMU is a preordering transaction, distinct from Comcast Phone ordering any other service(s). Loop Makeup Service Inquiries (LMUSI) and mechanized LMU queries for preordering LMU are likewise unique from other preordering functions with associated SIs as described in this Agreement.

2.9.1.2 BellSouth will provide Comcast Phone LMU information consisting of the composition of the Loop material (copper/fiber); the existence, location and type of equipment on the Loop, including but not limited to digital loop carrier or other remote concentration devices, feeder/distribution interfaces, bridged taps, load coils, pair-gain devices; the Loop length; the wire gauge and electrical parameters.

2.9.1.3 BellSouth's LMU information is provided to Comcast Phone as it exists either in BellSouth's databases or in its hard copy facility records. BellSouth does not guarantee accuracy or reliability of the LMU information provided.

2.9.1.4 BellSouth's provisioning of LMU information to the requesting CLEC for facilities is contingent upon either BellSouth or the requesting CLEC controlling the Loop(s) that serve the service location for which LMU information has been requested by the CLEC. The requesting CLEC is not authorized to receive LMU information on a facility used or controlled by another CLEC unless BellSouth receives a LOA from the voice CLEC (owner) or its authorized agent on the LMUSI submitted by the requesting CLEC.

2.9.1.5 Comcast Phone may choose to use equipment that it deems will enable it to provide a certain type and level of service over a particular BellSouth Loop as long as that equipment does not disrupt other services on the BellSouth network. The determination shall be made solely by Comcast Phone and BellSouth shall not be liable in any way for the performance of the advanced data services provisioned over said Loop. The specific Loop type (e.g., ADSL, HDSL, or otherwise) ordered on the LSR must match the LMU of the Loop reserved taking into consideration any requisite line conditioning. The LMU data is provided for informational purposes only and does not guarantee Comcast Phone's ability to provide advanced data services over the ordered Loop type. Furthermore, the LMU information for Loops other than copper-only Loops (e.g., ADSL, UCL-ND, etc.) that support xDSL services, is subject to change at any time due to modifications and/or upgrades to BellSouth's network. Except as set forth in Section 2.9.1.6, copper-only Loops will not be subject to change due to modification and/or upgrades to BellSouth's network and will remain on copper facilities until the Loop is disconnected by Comcast Phone or the End User, or until BellSouth retires the copper facilities via the FCC's and any applicable Commission's requirements. Comcast Phone is fully responsible for any of its service configurations that may differ from BellSouth's technical standard for the Loop type ordered.

2.9.1.6 If BellSouth retires its copper facilities using 47 C.F.R § 52.325(a) requirements; or is required by a governmental agency or regulatory body to move or replace copper facilities as a maintenance procedure, BellSouth will notify Comcast Phone, according to the applicable network disclosure requirements. It will be Comcast Phone's responsibility to move any service it may provide over such facilities to alternative facilities. If Comcast Phone fails to move the service to alternative

facilities by the date in the network disclosure notice, BellSouth may terminate the service to complete the network change.

2.9.2 Submitting LMUSI

2.9.2.1 Comcast Phone may obtain LMU information and reserve facilities by submitting a mechanized LMU query or a manual LMUSI according to the terms and conditions as described in the LMU CLEC Information Package, incorporated herein by reference as it may be amended from time to time. The CLEC Information Package is located at the "CLEC UNE Product" Web site address: www.interconnection.bellsouth.com/guides/html/unes.html. After obtaining the Loop information from the mechanized LMU process, if Comcast Phone needs further Loop information in order to determine Loop service capability, Comcast Phone may initiate a separate Manual SI for a separate NRC as set forth in Exhibit A.

2.9.2.2 All LSRs issued for reserved facilities shall reference the facility reservation number as provided by BellSouth. Comcast Phone will not be billed any additional LMU charges for the Loop ordered on such LSR. If, however, Comcast Phone does not reserve facilities upon an initial LMUSI, Comcast Phone's placement of an order for an advanced data service type facility will incur the appropriate billing charges to include SI and reservation per Exhibit A.

2.9.2.3 Where Comcast Phone has reserved multiple Loop facilities on a single reservation, Comcast Phone may not specify which facility shall be provisioned when submitting the LSR. For those occasions, BellSouth will assign to Comcast Phone, subject to availability, a facility that meets the BellSouth technical standards of the BellSouth type Loop as ordered by Comcast Phone.

2.9.2.4 Charges for preordering manual LMUSI or mechanized LMU are separate from any charges associated with ordering other services from BellSouth.

## 3 Line Splitting

3.1 Line splitting shall mean that a provider of data services (a Data LEC) and a provider of voice services (a Voice CLEC) to deliver voice and data service to End Users over the same Loop. The Voice CLEC and Data LEC may be the same or different carriers.

3.2 Line Splitting – UNE-L. In the event Comcast Phone provides its own switching or obtains switching from a third party, Comcast Phone may engage in line splitting arrangements with another CLEC using a splitter, provided by Comcast Phone, in a Collocation Space at the central office where the loop terminates into a distribution frame or its equivalent.

3.3 Provisioning Line Splitting and Splitter Space

3.3.1 The Data LEC, Voice CLEC or BellSouth may provide the splitter. When Comcast Phone or its authorized agent owns the splitter, Line Splitting requires the following: a non-designed analog Loop from the serving wire center to the NID at the End User's location; a collocation cross-connection connecting the Loop to the collocation space; a second collocation cross-connection from the collocation space connected to a voice port; the high frequency spectrum line activation, and a splitter. When BellSouth owns the splitter, Line Splitting requires the following: a non-designed analog Loop from the serving wire center to the NID at the End User's location with CFA and splitter port assignments, and a collocation cross-connection from the collocation space connected to a voice port.

3.3.2 An unloaded 2-wire copper Loop must serve the End User. The meet point for the Voice CLEC and the Data LEC is the point of termination on the MDF for the Data LEC's cable and pairs.

3.4 <u>CLEC Provided Splitter – Line Splitting</u>

3.4.1 To order High Frequency Spectrum on a particular Loop, Comcast Phone must have a DSLAM collocated in the central office that serves the End User of such Loop.

3.4.2 Comcast Phone must provide its own splitters in a central office and have installed its DSLAM in that central office.

3.4.3 Comcast Phone may purchase, install and maintain central office POTS splitters in its collocation arrangements. Comcast Phone may use such splitters for access to its customers and to provide digital line subscriber services to its customers using the High Frequency Spectrum. Existing Collocation rules and procedures and the terms and conditions relating to Collocation set forth in Attachment 4-Central Office shall apply.

3.4.4 Any splitters installed by Comcast Phone in its collocation arrangement shall comply with ANSI T1.413, Annex E, or any future ANSI splitter Standards. Comcast Phone may install any splitters that BellSouth deploys or permits to be deployed for itself or any BellSouth affiliate.

3.5 <u>Maintenance – Line Splitting.</u>

3.5.1 BellSouth will be responsible for repairing voice troubles and the troubles with the physical loop between the NID at the End User's premises and the termination point.

3.5.2 Comcast Phone shall indemnify, defend and hold harmless BellSouth from and against any claims, losses, actions, causes of action, suits, demands, damages, injury, and costs including reasonable attorney fees, which arise out of actions

related to the other service provider, except to the extent caused by BellSouth's gross negligence or willful misconduct.

## 4 Unbundled Network Element Combinations

4.1 For purposes of this Section, references to "Currently Combined" Network Elements shall mean that the particular Network Elements requested by Comcast Phone are in fact already combined by BellSouth in the BellSouth network. References to "Ordinarily Combined" Network Elements shall mean that the particular Network Elements requested by Comcast Phone are not already combined by BellSouth in the location requested by Comcast Phone but are elements that are typically combined in BellSouth's network. References to "Not Typically Combined" Network Elements shall mean that the particular Network Elements requested by Comcast Phone are not elements that BellSouth combines for its use in its network.

4.1.1 Except as otherwise set forth in this Agreement, upon request, BellSouth shall perform the functions necessary to combine Network Elements that BellSouth is required to provide under this Agreement in any manner, even if those elements are not ordinarily combined in BellSouth's network, provided that such Combination is technically feasible and will not undermine the ability of other carriers to obtain access to Network Elements or to interconnect with BellSouth's network.

4.1.2 To the extent Comcast Phone requests a Combination for which BellSouth does not have methods and procedures in place to provide such Combination, rates and/or methods or procedures for such Combination will be developed pursuant to the BFR process.

4.2 <u>Rates</u>

4.2.1 The rates for the Currently Combined Network Elements specifically set forth in Exhibit A shall be the rates associated with such Combinations. Where a Currently Combined Combination is not specifically set forth in Exhibit A, the rate for such Currently Combined Combination shall be the sum of the recurring rates for those individual Network Elements as set forth in Exhibit A and/or Exhibit B in addition to the applicable nonrecurring switch-as-is charge set forth in Exhibit A.

4.2.2 The rates for the Ordinarily Combined Network Elements specifically set forth in Exhibit A shall be the nonrecurring and recurring charges for those Combinations. Where an Ordinarily Combined Combination is not specifically set forth in Exhibit A, the rate for such Ordinarily Combined Combination shall be the sum of the recurring rates for those individual Network Elements as set forth in Exhibit A and/or Exhibit B and nonrecurring rates for those individual Network Elements as set forth in Exhibit A.

4.2.3 The rates for Not Typically Combined Combinations shall be developed pursuant to the BFR process upon request of Comcast Phone.

4.3 Enhanced Extended Links (EELs)

4.3.1 EELs are combinations of Loops and Dedicated Transport as defined in this Attachment, together with any facilities, equipment, or functions necessary to combine those Network Elements. BellSouth shall provide Comcast Phone with EELs where the underlying Network Element are available and are required to be provided pursuant to this Agreement and in all instances where the requesting carrier meets the eligibility requirements, if applicable.

4.3.2 High-capacity EELs are (1) combinations of Loop and Dedicated Transport, (2) Dedicated Transport commingled with a wholesale loop, or (3) a loop commingled with wholesale transport at the DS1 and/or DS3 level as described in 47 C.F.R. § 51.318(b).

4.3.3 By placing an order for a high-capacity EEL, Comcast Phone thereby certifies that the service eligibility criteria set forth herein are met for access to a converted high-capacity EEL, a new high-capacity EEL, or part of a high-capacity commingled EEL as a UNE. BellSouth shall have the right to audit Comcast Phone's high-capacity EELs as specified below.

4.3.4 Service Eligibility Criteria

4.3.4.1 High capacity EELs must comply with the following service eligibility requirements. Comcast Phone must certify for each high-capacity EEL that all of the following service eligibility criteria are met:

4.3.4.1.1 Comcast Phone has received state certification to provide local voice service in the area being served;

4.3.4.2 For each combined circuit, including each DS1 circuit, each DS1 EEL, and each DS1-equivalent circuit on a DS3 EEL:

4.3.4.2.1 1) Each circuit to be provided to each End User will be assigned a local number prior to the provision of service over that circuit;

4.3.4.2.2 2) Each DS1-equivalent circuit on a DS3 EEL must have its own local number assignment so that each DS3 must have at least twenty-eight (28) local voice numbers assigned to it;

4.3.4.2.3 3) Each circuit to be provided to each End User will have 911 or E911 capability prior to provision of service over that circuit;

4.3.4.2.4 4) Each circuit to be provided to each End User will terminate in a collocation arrangement that meets the requirements of 47 C.F.R. § 51.318(c);

4.3.4.2.5 5) Each circuit to be provided to each End User will be served by an interconnection trunk over which Comcast Phone will transmit the calling party's number in connection with calls exchanged over the trunk;

4.3.4.2.6 6) For each twenty-four (24) DS1 EELs or other facilities having equivalent capacity, Comcast Phone will have at least one (1) active DS1 local service interconnection trunk over which Comcast Phone will transmit the calling party's number in connection with calls exchanged over the trunk; and

4.3.4.2.7 7) Each circuit to be provided to each End User will be served by a switch capable of switching local voice traffic.

4.3.4.3 BellSouth may, on an annual basis, audit Comcast Phone's records in order to verify compliance with the qualifying service eligibility criteria. The audit shall be conducted by a third party independent auditor, and the audit must be performed in accordance with the standards established by the American Institute for Certified Public Accountants (AICPA). To the extent the independent auditor's report concludes that Comcast Phone failed to comply with the service eligibility criteria, Comcast Phone must true-up any difference in payments, convert all noncompliant circuits to the appropriate service, and make the correct payments on a going-forward basis. In the event the auditor's report concludes that Comcast Phone did not comply in any material respect with the service eligibility criteria, Comcast Phone shall reimburse BellSouth for the cost of the independent auditor. To the extent the auditor's report concludes that Comcast Phone did comply in all material respects with the service eligibility criteria, BellSouth will reimburse Comcast Phone for its reasonable and demonstrable costs associated with the audit. Comcast Phone will maintain appropriate documentation to support its certifications.

4.3.4.4 In the event Comcast Phone converts special access services to UNEs, Comcast Phone shall be subject to the termination liability provisions in the applicable special access tariffs, if any.

## 5 Dedicated Transport and Dark Fiber Transport

5.1 Dedicated Transport. Dedicated Transport is defined as BellSouth's transmission facilities between wire centers or switches owned by BellSouth, or between wire centers or switches owned by BellSouth and switches owned by Comcast Phone. Including but not limited to DS1, DS3 and OCn level services, as well as dark fiber, dedicated to Comcast Phone. BellSouth shall not be required to provide access to OCn level Dedicated Transport under any circumstances pursuant to this Agreement. In addition, except as set forth in Section 5.2 below, BellSouth shall not be required to provide to Comcast Phone unbundled access to interoffice transmission facilities that does not connect a pair of wire centers or switches owned by BellSouth ("Entrance Facilities").

5.2 Transition for DS1 and DS3 Dedicated Transport Requirements

5.2.1 For purposes of this Section 5.2, the Transition Period for the Embedded Base of DS1 and DS3 Dedicated Transport, Embedded Base Entrance Facilities and for Excess DS1 and DS3 Dedicated Transport, is the twelve (12) month period beginning March 11, 2005 and ending March 10, 2006.

5.2.2 For purposes of this Section 5.2, Embedded Base means DS1 and DS3 Dedicated Transport that were in service for Comcast Phone as of March 10, 2005 in those wire centers that, as of such date, met the criteria set forth in 5.2.6.1 or 5.2.6.2. Subsequent disconnects or loss of End Users shall be removed from the Embedded Base.

5.2.3 For purposes of this Section 5, Embedded Base Entrance Facilities means Entrance Facilities that were in service for Comcast Phone as of March 10, 2005. Subsequent disconnects or loss of customers shall be removed from the Embedded Base.

5.2.4 For purposes of this Section 5, Excess DS1 and DS3 Dedicated Transport means those Comcast Phone DS1 and DS3 Dedicated Transport facilities in service as of March 10, 2005, in excess of the caps set forth in Section 5.6. Subsequent disconnects and loss of End Users shall be removed from Excess DS1 and DS3 Loops.

5.2.5 For purposes of this Section 5.2, a Business Line is as defined in 47 C.F.R. § 51.5.

5.2.6 Notwithstanding anything to the contrary in this Agreement, BellSouth shall make available Dedicated Transport except as described in this Section 5.2 only for Comcast Phone's Embedded Base during the Transition Period.:

5.2.6.1 DS1 Dedicated Transport where both wire centers at the end points of the route contain 38,000 or more Business Lines or four (4) or more fiber-based collocators.

5.2.6.2 DS3 Dedicated Transport where both wire centers at the end points of the route contain 24,000 or more Business Lines or three (3) or more fiber-based collocators.

5.2.6.3 A list of wire centers meeting the criteria set forth in Section 5.2.6.1 or 5.2.6.2 above as of March 10, 2005, is available on BellSouth's Interconnection Services Web site at www.interconnection.bellsouth.com, as (Initial Wire Center List).

5.2.6.4 Notwithstanding anything to the contrary in this Agreement, BellSouth shall make available Entrance Facilities only for <Comcast Phone's Embedded Base Entrance Facilities and only during the Transition Period.

5.2.6.5 Notwithstanding the Effective Date of this Agreement, during the Transition Period, the rates for Comcast Phone's Embedded Base of DS1 and DS3 Dedicated

Transport and for Comcast Phone's Excess DS1 and DS3 Dedicated Transport as described in this Section 5.2 shall be as set forth in Exhibit B, and the rates for Comcast Phone's Embedded Base Entrance Facilities as described in this Section 5.2 shall be as set forth in Exhibit A.

5.2.6.6 The Transition Period shall apply only to (1) Comcast Phone's Embedded Base and Embedded Base Entrance Facilities; and (2) Comcast Phone's Excess DS1 and DS3 Dedicated Transport. Comcast Phone shall not add new Entrance Facilities pursuant to this Agreement. Further, Comcast Phone shall not add new DS1 or DS3 Dedicated Transport as described in this Section 5.2 pursuant to this Agreement, except pursuant to the self-certification process as set forth in Section 1.8 of this Attachment and as set forth in Section 5.2.6.10 below.

5.2.6.7 Once a wire center exceeds either of the thresholds set forth in this Section 5.2.4.1, no future DS1 Dedicated Transport unbundling will be required in that wire center.

5.2.6.8 Once a wire center exceeds either of the thresholds set forth in Section 5.2.4.2, no future DS3 Dedicated Transport will be required in that wire center.

5.2.6.9 No later than December 9, 2005 Comcast Phone shall submit spreadsheet(s) identifying all of the Embedded Base of circuits, Embedded Base Entrance Facilities, and Excess DS1 and DS3 Dedicated Transport to be either disconnected or converted to other BellSouth services pursuant to Section 1.6. The Parties shall negotiate a project schedule for the Conversion of the Embedded Base, Embedded Base Entrance Facilities and Excess DS1 and DS3 Dedicated Transport.

5.2.6.9.1 If Comcast Phone fails to submit the spreadsheet(s) specified in Section 5.2.6.9 above for all of its Embedded Base, Embedded Base Entrance Facilities and Excess DS1 and DS3 Dedicated Transport prior to December 9, 2005, BellSouth will identify Comcast Phone's remaining Embedded Base, Embedded Base Entrance Facilities and Excess DS1 and DS3 Dedicated Transport, if any, and will transition such circuits to the equivalent tariffed BellSouth service(s). Those circuits identified and transitioned by BellSouth pursuant to this Section 5.2.6.9.1 shall be subject to all applicable disconnect charges as set forth in this Agreement and the full nonrecurring charges for installation of the equivalent tariffed BellSouth service as set forth in BellSouth's tariffs.

5.2.6.9.2 For Embedded Base circuits, Embedded Base Entrance Facilities and Excess DS1 and DS3 Dedicated Transport converted pursuant to Section 5.2.6.9 or transitioned pursuant to 5.2.6.9.1, the applicable recurring tariff charge shall apply to each circuit as of the earlier of the date each circuit is converted or transitioned, as applicable, or March 11, 2006.

5.2.6.10 <u>Modifications and Updates to the Wire Center List and Subsequent Transition Periods</u>

5.2.6.10.1 In the event BellSouth identifies additional wire centers that meet the criteria set forth in Section 5.2.6.1 or 5.2.6.2, but that were not included in the Initial Wire Center List, BellSouth shall include such additional wire centers in CNL. Each such list of additional wire centers shall be considered a Subsequent Wire Center List.

5.2.6.10.2 Effective ten (10) business days after the date of a BellSouth CNL providing a Subsequent Wire Center List, BellSouth shall not be required to provide DS1 and DS3 Dedicated Transport, as applicable, in such additional wire center(s), except pursuant to the self-certification process as set forth in Section 1.8 of this Attachment.

5.2.6.10.3 For purposes of Section 5.2.6.10, BellSouth shall make available DS1 and DS3 Dedicated Transport that was in service for Comcast Phone in a wire center on the Subsequent Wire Center List as of the tenth ($10^{th}$) business day after the date of BellSouth's CNL identifying the Subsequent Wire Center List (Subsequent Embedded Base) until ninety (90) days after the tenth (10th) business day from the date of BellSouth's CNL identifying the Subsequent Wire Center List (Subsequent Transition Period).

5.2.6.10.4 Subsequent disconnects or loss of End Users shall be removed from the Subsequent Embedded Base.

5.2.6.10.5 The rates set forth in Exhibit B shall apply to the Subsequent Embedded Base during the Subsequent Transition Period.

5.2.6.10.6 No later than forty (40) days from BellSouth's CNL identifying the Subsequent Wire Center List Comcast Phone shall submit a spreadsheet(s) identifying the Subsequent Embedded Base of circuits to be disconnected or converted to other BellSouth services. The Parties shall negotiate a project schedule for the Conversion of the Subsequent Embedded Base.

5.2.6.10.6.1 If Comcast Phone fails to submit the spreadsheet(s) specified in Section 5.2.6.10.6 above for all of its Subsequent Embedded Base within forty (40) days after the date of BellSouth's CNL identifying the Subsequent Wire Center List, BellSouth will identify Comcast Phone's remaining Subsequent Embedded Base, if any, and will transition such circuits to the equivalent tariffed BellSouth service(s). Those circuits identified and transitioned by BellSouth shall be subject to the applicable disconnect charges as set forth in this Agreement and the full nonrecurring charges for installation of the equivalent tariffed BellSouth service as set forth in BellSouth's tariffs.

5.2.6.10.7 For Subsequent Embedded Base circuits converted pursuant to Section 5.2.6.10.6 or transitioned pursuant to Section 5.2.6.10.6.1, the applicable recurring tariff charges shall apply as of the earlier of the date each circuit is converted or

transitioned, as applicable, or the first day after the end of the Subsequent Transition Period.

5.2.7 BellSouth shall:

5.2.8 Provide Comcast Phone exclusive use of Dedicated Transport to a particular customer or carrier;

5.2.9 Provide all technically feasible features, functions, and capabilities of Dedicated Transport as outlined within the technical requirements of this section;

5.2.10 Permit, to the extent technically feasible, Comcast Phone to connect Dedicated Transport to equipment designated by Comcast Phone, including but not limited to, Comcast Phone's collocated facilities; and

5.2.11 Permit, to the extent technically feasible, Comcast Phone to obtain the functionality provided by BellSouth's digital cross-connect systems.

5.3 BellSouth shall offer Dedicated Transport:

5.3.1 As capacity on a shared facility; and

5.3.2 As a circuit (i.e., DS0, DS1, DS3, STS-1) dedicated to Comcast Phone.

5.4 Dedicated Transport may be provided over facilities such as optical fiber, copper twisted pair, and coaxial cable, and shall include transmission equipment such as line terminating equipment, amplifiers, and regenerators.

5.5 Comcast Phone may obtain a maximum of ten (10) unbundled DS1 Dedicated Transport circuits or twelve (12) unbundled DS3 Dedicated Transport circuits, or their equivalent, on each route where the respective Dedicated Transport is available as a Network Element. A route is defined as a transmission path between one of BellSouth's wire centers or switches and another of BellSouth's wire centers or switches. A route between two (2) points may pass through one or more intermediate wire centers or switches. Transmission paths between identical end points are the same "route", irrespective of whether they pass through the same intermediate wire centers or switches, if any.

5.6 <u>Technical Requirements</u>

5.6.1 BellSouth shall offer DS0 equivalent interface transmission rates for DS0 or voice grade Dedicated Transport. For DS1 or DS3 circuits, Dedicated Transport shall at a minimum meet the performance, availability, jitter, and delay requirements specified for Customer Interface to Central Office (CI to CO) connections in the applicable industry standards.

5.6.2 BellSouth shall offer the following interface transmission rates for Dedicated Transport:

5.6.2.1 DS0 Equivalent;

5.6.2.2 DS1;

5.6.2.3 DS3; and

5.6.2.4 SDH (Synchronous Digital Hierarchy) Standard interface rates are in accordance with International Telecommunications Union (ITU) Recommendation G.707 and Plesiochronous Digital Hierarchy (PDH) rates per ITU Recommendation G.704.

5.6.3 BellSouth shall design Dedicated Transport according to its network infrastructure. Comcast Phone shall specify the termination points for Dedicated Transport.

5.6.4 At a minimum, Dedicated Transport shall meet each of the requirements set forth in the applicable industry technical references and BellSouth Technical References;

5.6.4.1 Telcordia TR-TSY-000191 Alarm Indication Signals Requirements and Objectives, Issue 1, May 1986.

5.6.4.2 BellSouth's TR73501 LightGate®Service Interface and Performance Specifications, Issue D, June 1995.

5.6.4.3 BellSouth's TR73525 MegaLink®Service, MegaLink Channel Service and MegaLink Plus Service Interface and Performance Specifications, Issue C, May 1996.

5.7 Unbundled Channelization (Multiplexing)

5.7.1 To the extent Comcast Phone is purchasing DS1 or DS3 or STS-1 Dedicated Transport pursuant to this Agreement, Unbundled Channelization (UC) provides the optional multiplexing capability that will allow a DS1 (1.544 Mbps) or DS3 (44.736 Mbps) or STS-1 (51.84 Mbps) Network Elements to be multiplexed or channelized at a BellSouth central office. Channelization can be accomplished through the use of a multiplexer or a digital cross-connect system at the discretion of BellSouth. Once UC has been installed, Comcast Phone may request channel activation on a channelized facility and BellSouth shall connect the requested facilities via COCIs. The COCI must be compatible with the lower capacity facility and ordered with the lower capacity facility. This service is available as defined in NECA 4.

5.7.2 BellSouth shall make available the following channelization systems and interfaces:

5.7.2.1 DS1 Channelization System: channelizes a DS1 signal into a maximum of twenty-four (24) DS0s. The following COCI are available: Voice Grade, Digital Data and ISDN.

5.7.2.2 DS3 Channelization System: channelizes a DS3 signal into a maximum of twenty-eight (28) DS1s. A DS1 COCI is available with this system.

5.7.2.3 STS-1 Channelization System: channelizes a STS-1 signal into a maximum of twenty-eight (28) DS1s. A DS1 COCI is available with this system.

5.7.3 Technical Requirements. In order to assure proper operation with BellSouth provided central office multiplexing functionality, Comcast Phone's channelization equipment must adhere strictly to form and protocol standards. Comcast Phone must also adhere to such applicable industry standards for the multiplex channel bank, for voice frequency encoding, for various signaling schemes, and for sub rate digital access.

5.9 Dark Fiber Transport. Dark Fiber Transport is defined as Dedicated Transport that consists of unactivated optical interoffice transmission facilities without attached signal regeneration, multiplexing, aggregation or other electronics. Except as set forth in Section 5.9.1 below, BellSouth shall not be required to provide access to Dark Fiber Transport Entrance Facilities pursuant to this Agreement.

5.9.1 Transition Dark Fiber Transport Requirements

5.9.1.1 For purposes of this Section 5.9, the Transition Period for the Embedded Base of Dark Fiber Transport is the eighteen (18) month period beginning March 11, 2005 and ending September 10, 2006.

5.9.1.2 For purposes of this Section 5.9, Embedded Base means Dark Fiber Transport that was in service for Comcast Phone as of March 10, 2005 in those wire centers that, as of such date, met the criteria set forth in 5.9.1.4.1. Subsequent disconnects or loss of End Users shall be removed from the Embedded Base.

5.9.1.3 For purposes of this Section 5.9, a Business Line is as defined in 47 C.F.R. § 51.5.

5.9.1.4 Notwithstanding anything to the contrary in this Agreement, BellSouth shall make available Dark Fiber Transport as described in this Section 5.9 only for Comcast Phone's Embedded Base during the Transition Period.

5.9.1.4.1 Dark Fiber Transport where both wire centers at the end points of the route contain 24,000 or more Business Lines or three (3) or more fiber-based collocators.

5.9.1.5 A list of wire centers meeting the criteria set forth in Section 5.9.1.4 above as of March 10, 2005, (Initial List) is available on BellSouth's Interconnection Services Web site at www.interconnection.bellsouth.com.

5.9.1.6 Notwithstanding the Effective Date of this Agreement, during the Transition Period, the rates for Comcast Phone's Embedded Base of Dark Fiber Transport as described in Section 5.9.1.1 shall be as set forth in Exhibit B and the rates for Comcast Phone's Embedded Base of Dark Fiber Transport Entrance Facilities as described in Section 5.9.1 shall be as set forth in Exhibit A.

5.9.1.7 The Transition Period shall apply only to Comcast Phone's Embedded Base of Dark Fiber Transport and Dark Fiber Entrance Facilities. Comcast Phone shall not add new Dark Fiber Transport as described in this Section 5.9 except pursuant to the self-certification process as set forth in Section 1.8 of this Attachment and as set forth in Section 5.9.1.10 below. Further, Comcast Phone shall not add new Dark Fiber Entrance Facilities pursuant to this Agreement.

5.9.1.8 Once a wire center exceeds either of the thresholds set forth in this Section 5.9.1.2.1, no future Dark Fiber Transport unbundling will be required in that wire center.

5.9.1.9 No later than June 10, 2006 Comcast Phone shall submit spreadsheet(s) identifying all of the Embedded Base of Dark Fiber Transport and Dark Fiber Entrance Facilities to be either disconnected or converted to other BellSouth services as Conversions pursuant to Section 1.6. The Parties shall negotiate a project schedule for the Conversion of the Embedded Base.

5.9.1.9.1 If Comcast Phone fails to submit the spreadsheet(s) specified in Section 5.9.1.9 above for all of its Embedded Base prior to June 10, 2006, BellSouth will identify Comcast Phone's remaining Embedded Base, if any, and will transition such circuits to the equivalent tariffed BellSouth service(s). Those circuits identified and transitioned by BellSouth pursuant to this Section 5.9.1.9.1 shall be subject to all applicable disconnect charges as set forth in this Agreement and the full nonrecurring charges for installation of the equivalent tariffed BellSouth service as set forth in BellSouth's tariffs.

5.9.1.9.2 For Embedded Base circuits converted pursuant to Section 5.9.1.9 or transitioned pursuant to 5.9.1.9.1, the applicable recurring tariff charge shall apply to each circuit as of the earlier of the date each circuit is converted or transitioned, as applicable, or September 11, 2006.

5.9.1.10 <u>Modifications and Updates to the Wire Center List and Subsequent Transition Periods</u>

5.9.1.10.1 In the event BellSouth identifies additional wire centers that meet the criteria set forth in Section 5.9.1.4.1, but that were not included in the Initial Wire Center

List, BellSouth shall include such additional wire centers in a CNL. Each such list of additional wire centers shall be considered a "Subsequent Wire Center List".

5.9.1.10.2 Effective ten (10) business days after the date of a BellSouth CNL providing a Subsequent Wire Center List, BellSouth shall not be required to provide unbundled access to Dark Fiber Transport, as applicable, in such additional wire center(s), except pursuant to the self-certification process as set forth in Section 1.8 of this Attachment.

5.9.1.10.3 For purposes of Section 5.9.1.10, BellSouth shall make available DS1 and DS3 Loops that were in service for Comcast Phone in a wire center on the Subsequent Wire Center List as of the tenth ($10^{th}$) business day after the date of BellSouth's CNL identifying the Subsequent Wire Center List (Subsequent Embedded Base) until ninety (90) days after the tenth (10th) business day from the date of BellSouth's CNL identifying the Subsequent Wire Center List (Subsequent Transition Period).

5.9.1.10.4 Subsequent disconnects or loss of End Users shall be removed from the Subsequent Embedded Base.

5.9.1.10.5 The rates set forth in Exhibit B shall apply to the Subsequent Embedded Base during the Subsequent Transition Period.

5.9.1.10.6 No later than forty (40) days from BellSouth's CNL identifying the Subsequent Wire Center List Comcast Phone shall submit a spreadsheet(s) identifying the Subsequent Embedded Base of circuits to be disconnected or converted to other BellSouth services. The Parties shall negotiate a project schedule for the Conversion of the Subsequent Embedded Base.

5.9.1.10.6.1 If Comcast Phone fails to submit the spreadsheet(s) specified in Section 5.9.1.10.6 above for all of its Subsequent Embedded Base within forty (40) days after the date of BellSouth's CNL identifying the Subsequent Wire Center List, BellSouth will identify Comcast Phone's remaining Subsequent Embedded Base, if any, and will transition such circuits to the equivalent tariffed BellSouth service(s). Those circuits identified and transitioned by BellSouth shall be subject to the applicable disconnect charges as set forth in this Agreement and the full nonrecurring charges for installation of the equivalent tariffed BellSouth service as set forth in BellSouth's tariffs.

5.9.1.10.6.2 For Subsequent Embedded Base circuits converted pursuant to Section 5.9.1.10.6 or transitioned pursuant to Section 5.9.1.10.6.1, the applicable recurring tariff charges shall apply as of the earlier of the date each circuit is converted or transitioned, as applicable, or the first day after the end of the Subsequent Transition Period.

5.10 <u>Rearrangements</u>

5.10.1 A request to move a working Comcast Phone CFA to another Comcast Phone CFA, where both CFAs terminate in the same BellSouth Central Office ("Change in CFA"), shall not constitute the establishment of new service. The applicable rates set forth in Exhibit A shall apply.

5.10.2 Requests to re-terminate one end of a facility that is not a Change in CFA constitute the establishment of new service and require disconnection of existing service and the applicable rates set forth in Exhibit A shall apply.

5.10.3 Upon request of Comcast Phone, BellSouth shall project manage the Change in CFA or re-termination of a facility as described in Sections 5.10.1 and 5.10.2 above and Comcast Phone may request OC-TS for such orders.

5.10.4 BellSouth shall accept a Letter of Authorization (LOA) between Comcast Phone and another carrier that will allow Comcast Phone to connect a facility, or Combination that includes Dedicated Transport to the other carrier's collocation space or to another carrier's CFA associated with higher bandwidth transport.

## 6 Automatic Location Identification/Data Management System (ALI/DMS)

6.1 911 and E911 Databases

6.1.1 BellSouth shall provide Comcast Phone with nondiscriminatory access to 911 and E911 databases on an unbundled basis, in accordance with 47 C.F.R. § 51.319 (f).

6.1.2 The ALI/DMS database contains End User information (including name, address, telephone information, and sometimes special information from the local service provider or End User) used to determine to which PSAP to route the call. The ALI/DMS database is used to provide enhanced routing flexibility for E911. Comcast Phone will be required to provide the BellSouth 911 database vendor daily service order updates to E911 database in accordance with Section 6.2.1.

6.2 Technical Requirements

6.2.1 BellSouth's 911 database vendor shall provide Comcast Phone the capability of providing updates to the ALI/DMS database through a specified electronic interface. Comcast Phone shall contact BellSouth's 911 database vendor directly to request interface. Comcast Phone shall provide updates directly to BellSouth's 911 database vendor on a daily basis. Updates shall be the responsibility of Comcast Phone and BellSouth shall not be liable for the transactions between Comcast Phone and BellSouth's 911 database vendor.

6.2.2 BellSouth, directly or through BellSouth's contracted 911 database vendor, shall ensure that Comcast Phone has restricted clerical access to its customer records, as identified by NENA ID, in the ALI database, as set forth in NENA Data Standards.

6.2.3 It is Comcast Phone's responsibility to retrieve and confirm statistical data and to correct errors obtained from BellSouth's 911 database vendor on a daily basis. All errors will be assigned a unique error code and the description of the error and the corrective action is described in the CLEC Users Guide for Facility Based Providers that is found on the BellSouth Interconnection Web site.

6.2.4 Comcast Phone shall conform to the BellSouth standards as described in the CLEC Users Guide to E911 for Facilities Based Providers that is located on the BellSouth Interconnection Web site at http://www.interconnection.bellsouth.com/guides.

6.2.5 Stranded Unlocks are defined as End User records in BellSouth's ALI/DMS database that have not been migrated for over ninety (90) days to Comcast Phone, as a new provider of local service to the End User. Stranded Unlocks are those End User records that have been "unlocked" by the previous local exchange carrier that provided service to the End User and are open for Comcast Phone to assume responsibility for such records.

6.2.5.1 Based upon End User record ownership information available in the NPAC database, BellSouth shall provide a Stranded Unlock annual report to Comcast Phone that reflects all Stranded Unlocks that remain in the ALI/DMS database for over ninety (90) days. Comcast Phone shall review the Stranded Unlock report, identify its End User records and request to either delete such records or migrate the records to Comcast Phone within two (2) months following the date of the Stranded Unlock report provided by BellSouth. Comcast Phone shall reimburse BellSouth for any charges BellSouth's database vendor imposes on BellSouth for the deletion of Comcast Phone's records.

**7 White Pages Listings**

7.1 BellSouth shall provide Comcast Phone and its End Users access to white pages directory listings under the following terms:

7.1.2 Listings. Comcast Phone shall provide all new, changed and deleted listings on a timely basis and BellSouth or its agent will include Comcast Phone residential and business End User listings in the appropriate White Pages (residential and business) or alphabetical directories in the geographic areas covered by this Agreement. Directory listings will make no distinction between Comcast Phone and BellSouth End Users. Comcast Phone shall provide listing information in accordance with the procedures set forth in The BellSouth Business Rules for Local Ordering found at BellSouth's Interconnection Services Web site.

7.1.3 Unlisted/Non-Published End Users. Comcast Phone will be required to provide to BellSouth the names, addresses and telephone numbers of all Comcast Phone End Users who wish to be omitted from directories. Unlisted/Non-Published listings

will be subject to the rates as set forth in BellSouth's General Subscriber Services Tariff (GSST) and shall not be subject to wholesale discount.

7.1.4 Inclusion of Comcast Phone End Users in Directory Assistance Database. BellSouth will include and maintain Comcast Phone End User listings in BellSouth's Directory Assistance databases. Comcast Phone shall provide such Directory Assistance listings to BellSouth at no charge.

7.1.5 Listing Information Confidentiality. BellSouth will afford Comcast Phone's directory listing information the same level of confidentiality that BellSouth affords its own directory listing information.

7.1.6 Additional and Designer Listings. Additional and designer listings will be offered by BellSouth at tariffed rates as set forth in the GSST and shall not be subject to the wholesale discount.

7.1.7 Rates. So long as Comcast Phone provides listing information to BellSouth as set forth in Section 7.1.2 above, BellSouth shall provide to Comcast Phone one (1) basic White Pages directory listing per Comcast Phone End User at no charge other than applicable service order charges as set forth in BellSouth's tariffs. Except in the case of a local service request (LSR) submitted solely to port a number from BellSouth, if such listing is requested on the initial LSR associated with the request for services, a single manual service order charge or electronic service order charge, as appropriate, as described in Attachment 6 of this Agreement, will apply to both the request for service and the request for the directory listing. Where a subsequent LSR is placed solely to request a directory listing, or is placed to port a number and request a directory listing, separate service order charges as set forth in BellSouth's tariffs shall apply, as well as the manual service order charge or the electronic service order charge, as appropriate, as described in Attachment 6 of this Agreement.

7.2 Directories. BellSouth or its agent shall make available White Pages directories to Comcast Phone End User at no charge or as specified in a separate agreement between Comcast Phone and BellSouth's agent.

7.3 Procedures for submitting Comcast Phone Subscriber Listing Information (SLI) are found in The BellSouth Business Rules for Local Ordering found at BellSouth's Interconnection Services Web site.

7.3.1 Comcast Phone authorizes BellSouth to release all Comcast Phone SLI provided to BellSouth by Comcast Phone to qualifying third parties pursuant to either a license agreement or BellSouth's Directory Publishers Database Service (DPDS), General Subscriber Services Tariff (GSST), as the same may be amended from time to time. Such Comcast Phone SLI shall be intermingled with BellSouth's own End User listings and listings of any other CLEC that has authorized a similar release of SLI.

7.3.2 No compensation shall be paid to Comcast Phone for BellSouth's receipt of Comcast Phone SLI, or for the subsequent release to third parties of such SLI. In addition, to the extent BellSouth incurs costs to modify its systems to enable the release of Comcast Phone's SLI, or costs on an ongoing basis to administer the release of Comcast Phone SLI, Comcast Phone shall pay to BellSouth its proportionate share of the reasonable costs associated therewith. At any time that costs may be incurred to administer the release of Comcast Phone's SLI, Comcast Phone will be notified. If Comcast Phone does not wish to pay its proportionate share of these reasonable costs, Comcast Phone may instruct BellSouth that it does not wish to release its SLI to independent publishers, and Comcast Phone shall amend this Agreement accordingly. Comcast Phone will be liable for all costs incurred until the effective date of the agreement.

7.3.3 Neither BellSouth nor any agent shall be liable for the content or accuracy of any SLI provided by Comcast Phone under this Agreement. Comcast Phone shall indemnify, except to the extent caused by BellSouth's gross negligence or willful misconduct, hold harmless and defend BellSouth and its agents from and against any damages, losses, liabilities, demands, claims, suits, judgments, costs and expenses (including but not limited to reasonable attorneys' fees and expenses) arising from BellSouth's tariff obligations or otherwise and resulting from or arising out of any third party's claim of inaccurate Comcast Phone listings or use of the SLI provided pursuant to this Agreement. BellSouth may forward to Comcast Phone any complaints received by BellSouth relating to the accuracy or quality of Comcast Phone listings.

7.3.4 Listings and subsequent updates will be released consistent with BellSouth system changes and/or update scheduling requirements.

## UNBUNDLED NETWORK ELEMENTS - Alabama

Attachment: 2 Exh. A

| CATEGORY | RATE ELEMENTS | Interim | Zone | BCS | USOC | RATES($) Rec | Nonrecurring First | Nonrecurring Add'l | Nonrecurring Disconnect First | Nonrecurring Disconnect Add'l | Svc Order Submitted Elec per LSR | Svc Order Submitted Manually per LSR | Incremental Charge - Manual Svc Order vs. Electronic-1st | Incremental Charge - Manual Svc Order vs. Electronic-Add'l | Incremental Charge - Manual Svc Order vs. Electronic-Disc 1st | Incremental Charge - Manual Svc Order vs. Electronic-Disc Add'l |
|---|---|---|---|---|---|---|---|---|---|---|---|---|---|---|---|---|
| | | | | | | | | | | | OSS Rates($) | | | | | |
| | | | | | | | First | Add'l | First | Add'l | SOMEC | SOMAN | SOMAN | SOMAN | SOMAN | SOMAN |
| | **The "Zone" shown in the sections for stand-alone loops or loops as part of a combination refers to Geographically Deaveraged UNE Zones. To view Geographically Deaveraged UNE Zone Designations by Central Office, refer to internet Website: http://www.interconnection.bellsouth.com/become_a_clec/html/interconnection.htm** | | | | | | | | | | | | | | | |
| **OPERATIONS SUPPORT SYSTEMS (OSS) - "STATE SPECIFIC RATES"** | | | | | | | | | | | | | | | | |
| | NOTE: (1) CLEC should contact its contract negotiator if it prefers the "regional" OSS charges as offered by BellSouth. The OSS charges currently contained in this rate exhibit are the PSC state ordered "state specificl" service ordering charges. CLEC may elect either the state specific Commission ordered rates for the service ordering charges, or CLEC may elect the regional service ordering charge, however, CLEC can not obtain a mixture of the two regardless if CLEC has a interconnection contract established in each of the 9 states. | | | | | | | | | | | | | | | |
| | NOTE: (2) Any element that can be ordered electronically will be billed according to the SOMEC rate listed in this category. Please refer to BellSouth's Local Ordering Handbook (LOH) to determine if a product can be ordered electronically. For those elements that cannot be ordered electronically at present per the LOH, the listed SOMEC rate in this category reflects the charge that would be billed to a CLEC once electronic ordering capabilities come on-line for that element. Otherwise, the manual ordering charge, SOMAN, will be applied to a CLECs bill when it submits an LSR to BellSouth. | | | | | | | | | | | | | | | |
| | OSS - Electronic Service Order Charge, Per Local Service Request (LSR) - UNE Only | | | | SOMEC | | 5.83 | 0.00 | 3.72 | 0.00 | | | | | | |
| | OSS - Manual Service Order Charge, Per Local Service Request (LSR) - UNE Only | | | | SOMAN | | 15.66 | 0.00 | 1.97 | 0.00 | | | | | | |
| **UNE SERVICE DATE ADVANCEMENT CHARGE** | | | | | | | | | | | | | | | | |
| | **NOTE: The Expedite charge will be maintained commensurate with BellSouth's FCC No.1 Tariff, Section 5 as applicable.** | | | | | | | | | | | | | | | |
| | UNE Expedite Charge per Circuit or Line Assignable USOC, per Day | | | UAL, UEANL, UCL, UEF, UDF, UEQ, UDL, UENTW, UDN, UEA, UHL, ULC, USL, U1T12, U1T48, U1TD1, U1TD3, U1TDX, U1TO3, U1TS1, U1TVX, UC1BC, UC1BL, UC1CC, UC1CL, UC1DC, UC1DL, UC1EC, UC1EL, UC1FC, UC1FL, UC1GC, UC1GL, UC1HC, UC1HL, UDL12, UDL48, UDLO3, UDLSX, UE3, ULD12, ULD48, ULDD1, ULDD3, ULDDX, ULDO3, ULDS1, ULDVX, UNC1X, UNC3X, UNCDX, UNCNX, UNCSX, UNCVX, UNLD1, UNLD3, UXTD1, UXTD3, UXTS1, U1TUC, U1TUD, U1TUB, U1TUA, NTCVG, NTCUD, NTCD1 | SDASP | | 200.00 | 200.00 | | | | | | | | |
| **ORDER MODIFICATION CHARGE** | | | | | | | | | | | | | | | | |
| | Order Modification Charge (OMC) | | | | | | 35.13 | 0.00 | 0.00 | 0.00 | | | | | | |
| | Order Modification Additional Dispatch Charge (OMCAD) | | | | | | 150.00 | 0.00 | 0.00 | 0.00 | | | | | | |
| **UNBUNDLED EXCHANGE ACCESS LOOP** | | | | | | | | | | | | | | | | |
| | **2-WIRE ANALOG VOICE GRADE LOOP** | | | | | | | | | | | | | | | |
| | 2-Wire Analog Voice Grade Loop - Service Level 1- Zone 1 | | 1 | UEANL | UEAL2 | 12.58 | 37.81 | 17.56 | 23.49 | 5.30 | | | | | | |
| | 2-Wire Analog Voice Grade Loop - Service Level 1- Zone 2 | | 2 | UEANL | UEAL2 | 21.05 | 37.81 | 17.56 | 23.49 | 5.30 | | | | | | |
| | 2-Wire Analog Voice Grade Loop - Service Level 1- Zone 3 | | 3 | UEANL | UEAL2 | 34.34 | 37.81 | 17.56 | 23.49 | 5.30 | | | | | | |
| | 2-Wire Analog Voice Grade Loop - Service Level 1- Zone 1 | | 1 | UEANL | UEASL | 12.58 | 37.81 | 17.56 | 23.49 | 5.30 | | | | | | |
| | 2-Wire Analog Voice Grade Loop - Service Level 1- Zone 2 | | 2 | UEANL | UEASL | 21.05 | 37.81 | 17.56 | 23.49 | 5.30 | | | | | | |
| | 2-Wire Analog Voice Grade Loop - Service Level 1- Zone 3 | | 3 | UEANL | UEASL | 34.34 | 37.81 | 17.56 | 23.49 | 5.30 | | | | | | |
| | Unbundled Miscellaneous Rate Element, Tag Loop at End User Premise | | | UEANL | URETL | | 8.93 | 0.88 | | | | | | | | |

| UNBUNDLED NETWORK ELEMENTS - Alabama | | | | | | | | | | | | | | Attachment: 2 Exh. A | | | |
|---|---|---|---|---|---|---|---|---|---|---|---|---|---|---|---|---|---|
| CATEGORY | RATE ELEMENTS | Interim | Zone | BCS | USOC | RATES($) | | | | | Svc Order Submitted Elec per LSR | Svc Order Submitted Manually per LSR | Incremental Charge - Manual Svc Order vs. Electronic-1st | Incremental Charge - Manual Svc Order vs. Electronic-Add'l | Incremental Charge - Manual Svc Order vs. Electronic-Disc 1st | Incremental Charge - Manual Svc Order vs. Electronic-Disc Add'l |
| | | | | | | Rec | Nonrecurring | | Nonrecurring Disconnect | | OSS Rates($) | | | | | |
| | | | | | | | First | Add'l | First | Add'l | SOMEC | SOMAN | SOMAN | SOMAN | SOMAN | SOMAN |
| | Loop Testing - Basic 1st Half Hour | | | UEANL | URET1 | | 34.16 | 0.00 | | | | | | | | |
| | Loop Testing - Basic Additional Half Hour | | | UEANL | URETA | | 19.85 | 19.85 | | | | | | | | |
| | CLEC to CLEC Conversion Charge Without Outside Dispatch (UVL-SL1) | | | UEANL | UREWO | | 15.78 | 8.94 | | | | | | | | |
| | Unbundled Voice Loop, Non-Design Voice Loop, billing for BST providing make-up (Engineering Information - E.I.) | | | UEANL | UEANM | | 13.44 | | | | | | | | | |
| | Manual Order Coordination for UVL-SL1s (per loop) | | | UEANL | UEAMC | | 8.15 | 8.15 | | | | | | | | |
| | Order Coordination for Specified Conversion Time for UVL-SL1 (per LSR) | | | UEANL | OCOSL | | 18.09 | | | | | | | | | |
| **2-WIRE Unbundled COPPER LOOP** | | | | | | | | | | | | | | | | |
| | 2-Wire Unbundled Copper Loop - Non-Designed Zone 1 | | 1 | UEQ | UEQ2X | 11.20 | 34.14 | 15.10 | 21.25 | 4.15 | | | | | | |
| | 2 Wire Unbundled Copper Loop - Non-Designed - Zone 2 | | 2 | UEQ | UEQ2X | 13.27 | 34.14 | 15.10 | 21.25 | 4.15 | | | | | | |
| | 2 Wire Unbundled Copper Loop - Non-Designed - Zone 3 | | 3 | UEQ | UEQ2X | 15.07 | 34.14 | 15.10 | 21.25 | 4.15 | | | | | | |
| | Unbundled Miscellaneous Rate Element, Tag Loop at End User Premise | | | UEQ | URETL | | 8.93 | 0.88 | | | | | | | | |
| | Manual Order Coordination 2 Wire Unbundled Copper Loop - Non-Designed (per loop) | | | UEQ | USBMC | | 8.15 | | | | | | | | | |
| | Unbundled Copper Loop, Non-Design Copper Loop, billing for BST providing make-up (Engineering Information - E.I.) | | | UEQ | UEQMU | | 13.44 | | | | | | | | | |
| | Loop Testing - Basic 1st Half Hour | | | UEQ | URET1 | | 34.16 | 0.00 | | | | | | | | |
| | Loop Testing - Basic Additional Half Hour | | | UEQ | URETA | | 19.85 | 19.85 | | | | | | | | |
| **UNBUNDLED EXCHANGE ACCESS LOOP** | | | | | | | | | | | | | | | | |
| **2-WIRE ANALOG VOICE GRADE LOOP** | | | | | | | | | | | | | | | | |
| | 2-Wire Analog Voice Grade Loop - Service Level 2 w/Loop or Ground Start Signaling - Zone 1 | | 1 | UEA, NTCVG | UEAL2 | 14.38 | 88.00 | 55.00 | 47.24 | 7.44 | | | | | | |
| | 2-Wire Analog Voice Grade Loop - Service Level 2 w/Loop or Ground Start Signaling - Zone 2 | | 2 | UEA, NTCVG | UEAL2 | 22.85 | 88.00 | 55.00 | 47.24 | 7.44 | | | | | | |
| | 2-Wire Analog Voice Grade Loop - Service Level 2 w/Loop or Ground Start Signaling - Zone 3 | | 3 | UEA, NTCVG | UEAL2 | 36.14 | 88.00 | 55.00 | 47.24 | 7.44 | | | | | | |
| | 2-Wire Analog Voice Grade Loop - Service Level 2 w/Reverse Battery Signaling - Zone 1 | | 1 | UEA, NTCVG | UEAR2 | 14.38 | 88.00 | 55.00 | 47.24 | 7.44 | | | | | | |
| | 2-Wire Analog Voice Grade Loop - Service Level 2 w/Reverse Battery Signaling - Zone 2 | | 2 | UEA, NTCVG | UEAR2 | 22.85 | 88.00 | 55.00 | 47.24 | 7.44 | | | | | | |
| | 2-Wire Analog Voice Grade Loop - Service Level 2 w/Reverse Battery Signaling - Zone 3 | | 3 | UEA, NTCVG | UEAR2 | 36.14 | 88.00 | 55.00 | 47.24 | 7.44 | | | | | | |
| | Switch-As-Is Conversion rate per UNE Loop, Single LSR, (per DS0) | | | UEA, NTCVG | URESL | | 21.91 | 3.15 | | | | | | | | |
| | Switch-As-Is Conversion rate per UNE Loop, Spreadsheet (per DS0) | | | UEA, NTCVG | URESP | | 23.32 | 4.56 | | | | | | | | |
| | CLEC to CLEC Conversion Charge without outside dispatch | | | UEA, NTCVG | UREWO | | 87.72 | 36.36 | | | | | | | | |
| | Loop Tagging - Service Level 2 (SL2) | | | UEA, NTCVG | URETL | | 11.21 | 1.10 | | | | | | | | |
| **4-WIRE ANALOG VOICE GRADE LOOP** | | | | | | | | | | | | | | | | |
| | 4-Wire Analog Voice Grade Loop - Zone 1 | | 1 | UEA, NTCVG | UEAL4 | 25.34 | 131.97 | 94.51 | 59.14 | 14.50 | | | | | | |
| | 4-Wire Analog Voice Grade Loop - Zone 2 | | 2 | UEA, NTCVG | UEAL4 | 38.58 | 131.97 | 94.51 | 59.14 | 14.50 | | | | | | |
| | 4-Wire Analog Voice Grade Loop - Zone 3 | | 3 | UEA, NTCVG | UEAL4 | 60.02 | 131.97 | 94.51 | 59.14 | 14.50 | | | | | | |
| | Switch-As-Is Conversion rate per UNE Loop, Single LSR, (per DS0) | | | UEA, NTCVG | URESL | | 21.91 | 3.15 | | | | | | | | |
| | Switch-As-Is Conversion rate per UNE Loop, Spreadsheet, (per DS0) | | | UEA, NTCVG | URESP | | 23.32 | 4.56 | | | | | | | | |
| | CLEC to CLEC Conversion Charge without outside dispatch | | | UEA, NTCVG | UREWO | | 87.72 | 36.36 | | | | | | | | |
| **2-WIRE ISDN DIGITAL GRADE LOOP** | | | | | | | | | | | | | | | | |
| | 2-Wire ISDN Digital Grade Loop - Zone 1 | | 1 | UDN | U1L2X | 21.88 | 117.24 | 79.77 | 52.88 | 10.54 | | | | | | |
| | 2-Wire ISDN Digital Grade Loop - Zone 2 | | 2 | UDN | U1L2X | 32.85 | 117.24 | 79.77 | 52.88 | 10.54 | | | | | | |
| | 2-Wire ISDN Digital Grade Loop - Zone 3 | | 3 | UDN | U1L2X | 48.55 | 117.24 | 79.77 | 52.88 | 10.54 | | | | | | |
| | CLEC to CLEC Conversion Charge without outside dispatch | | | UDN | UREWO | | 91.63 | 44.16 | | | | | | | | |
| **2-WIRE ASYMMETRICAL DIGITAL SUBSCRIBER LINE (ADSL) COMPATIBLE LOOP** | | | | | | | | | | | | | | | | |
| | 2 Wire Unbundled ADSL Loop including manual service inquiry & facility reservation - Zone 1 | | 1 | UAL | UAL2X | 11.01 | 110.00 | 68.00 | 47.24 | 7.44 | | | | | | |

| CATEGORY | RATE ELEMENTS | Interim | Zone | BCS | USOC | RATES($) | | | | | Svc Order Submitted Elec per LSR | Svc Order Submitted Manually per LSR | Incremental Charge - Manual Svc Order vs. Electronic-1st | Incremental Charge - Manual Svc Order vs. Electronic-Add'l | Incremental Charge - Manual Svc Order vs. Electronic-Disc 1st | Incremental Charge - Manual Svc Order vs. Electronic-Disc Add'l |
|---|---|---|---|---|---|---|---|---|---|---|---|---|---|---|---|---|
| | | | | | | Rec | Nonrecurring | | Nonrecurring Disconnect | | OSS Rates($) | | | | | |
| | | | | | | | First | Add'l | First | Add'l | SOMEC | SOMAN | SOMAN | SOMAN | SOMAN | SOMAN |
| | 2 Wire Unbundled ADSL Loop including manual service inquiry & facility reservation - Zone 2 | | 2 | UAL | UAL2X | 12.73 | 110.00 | 68.00 | 47.24 | 7.44 | | | | | | |
| | 2 Wire Unbundled ADSL Loop including manual service inquiry & facility reservation - Zone 3 | | 3 | UAL | UAL2X | 14.30 | 110.00 | 68.00 | 47.24 | 7.44 | | | | | | |
| | 2 Wire Unbundled ADSL Loop without manual service inquiry & facility reservaton - Zone 1 | | 1 | UAL | UAL2W | 11.01 | 90.00 | 57.00 | 47.24 | 7.44 | | | | | | |
| | 2 Wire Unbundled ADSL Loop without manual service inquiry & facility reservaton - Zone 2 | | 2 | UAL | UAL2W | 12.73 | 90.00 | 57.00 | 47.24 | 7.44 | | | | | | |
| | 2 Wire Unbundled ADSL Loop without manual service inquiry & facility reservaton - Zone 3 | | 3 | UAL | UAL2W | 14.30 | 90.00 | 57.00 | 47.24 | 7.44 | | | | | | |
| | CLEC to CLEC Conversion Charge without outside dispatch | | | UAL | UREWO | | 86.20 | 40.40 | | | | | | | | |
| **2-WIRE HIGH BIT RATE DIGITAL SUBSCRIBER LINE (HDSL) COMPATIBLE LOOP** | | | | | | | | | | | | | | | | |
| | 2 Wire Unbundled HDSL Loop including manual service inquiry & facility reservation - Zone 1 | | 1 | UHL | UHL2X | 8.74 | 110.00 | 68.00 | 47.24 | 7.44 | | | | | | |
| | 2 Wire Unbundled HDSL Loop including manual service inquiry & facility reservation - Zone 2 | | 2 | UHL | UHL2X | 10.17 | 110.00 | 68.00 | 47.24 | 7.44 | | | | | | |
| | 2 Wire Unbundled HDSL Loop including manual service inquiry & facility reservation - Zone 3 | | 3 | UHL | UHL2X | 11.44 | 110.00 | 68.00 | 47.24 | 7.44 | | | | | | |
| | 2 Wire Unbundled HDSL Loop without manual service inquiry and facility reservation - Zone 1 | | 1 | UHL | UHL2W | 8.74 | 90.00 | 57.00 | 47.24 | 7.44 | | | | | | |
| | 2 Wire Unbundled HDSL Loop without manual service inquiry and facility reservation - Zone 2 | | 2 | UHL | UHL2W | 10.17 | 90.00 | 57.00 | 47.24 | 7.44 | | | | | | |
| | 2 Wire Unbundled HDSL Loop without manual service inquiry and facility reservation - Zone 3 | | 3 | UHL | UHL2W | 11.44 | 90.00 | 57.00 | 47.24 | 7.44 | | | | | | |
| | CLEC to CLEC Conversion Charge without outside dispatch | | | UHL | UREWO | | 86.14 | 40.40 | | | | | | | | |
| **4-WIRE HIGH BIT RATE DIGITAL SUBSCRIBER LINE (HDSL) COMPATIBLE LOOP** | | | | | | | | | | | | | | | | |
| | 4 Wire Unbundled HDSL Loop including manual service inquiry and facility reservation - Zone 1 | | 1 | UHL | UHL4X | 13.95 | 148.36 | 68.00 | 51.70 | 9.73 | | | | | | |
| | 4-Wire Unbundled HDSL Loop including manual service inquiry and facility reservation - Zone 2 | | 2 | UHL | UHL4X | 15.56 | 148.36 | 68.00 | 51.70 | 9.73 | | | | | | |
| | 4-Wire Unbundled HDSL Loop including manual service inquiry and facility reservation - Zone 3 | | 3 | UHL | UHL4X | 15.25 | 148.36 | 68.00 | 51.70 | 9.73 | | | | | | |
| | 4-Wire Unbundled HDSL Loop without manual service inquiry and facility reservation - Zone 1 | | 1 | UHL | UHL4W | 13.95 | 94.00 | 57.00 | 51.70 | 9.73 | | | | | | |
| | 4-Wire Unbundled HDSL Loop without manual service inquiry and facility reservation - Zone 2 | | 2 | UHL | UHL4W | 15.56 | 94.00 | 57.00 | 51.70 | 9.73 | | | | | | |
| | 4-Wire Unbundled HDSL Loop without manual service inquiry and facility reservation - Zone 3 | | 3 | UHL | UHL4W | 15.25 | 94.00 | 57.00 | 51.70 | 9.73 | | | | | | |
| | CLEC to CLEC Conversion Charge without outside dispatch | | | UHL | UREWO | | 86.14 | 40.40 | | | | | | | | |
| **4-WIRE DS1 DIGITAL LOOP** | | | | | | | | | | | | | | | | |
| | 4-Wire DS1 Digital Loop - Zone 1 | | 1 | USL, NTCD1 | USLXX | 82.55 | 252.47 | 157.54 | 44.70 | 11.71 | | | | | | |
| | 4-Wire DS1 Digital Loop - Zone 2 | | 2 | USL, NTCD1 | USLXX | 154.18 | 252.47 | 157.54 | 44.70 | 11.71 | | | | | | |
| | 4-Wire DS1 Digital Loop - Zone 3 | | 3 | USL, NTCD1 | USLXX | 314.52 | 252.47 | 157.54 | 44.70 | 11.71 | | | | | | |
| | Switch-As-Is Conversion rate per UNE Loop, single LSR, (per DS1) | | | USL, NTCD1 | URESL | | 21.91 | 3.15 | | | | | | | | |
| | Switch-As-Is Conversion rate per UNE Loop, Spreadsheet, (per DS1) | | | USL, NTCD1 | URESP | | 23.32 | 4.56 | | | | | | | | |
| | CLEC to CLEC Conversion Charge without outside dispatch | | | USL | UREWO | | 101.09 | 43.05 | | | | | | | | |
| **4-WIRE 19.2, 56 OR 64 KBPS DIGITAL GRADE LOOP** | | | | | | | | | | | | | | | | |
| | 4 Wire Unbundled Digital 19.2 Kbps | | 1 | UDL, NTCUD | UDL19 | 26.09 | 126.27 | 88.80 | 59.14 | 14.50 | | | | | | |
| | 4 Wire Unbundled Digital 19.2 Kbps | | 2 | UDL, NTCUD | UDL19 | 35.95 | 126.27 | 88.80 | 59.14 | 14.50 | | | | | | |
| | 4 Wire Unbundled Digital 19.2 Kbps | | 3 | UDL, NTCUD | UDL19 | 37.88 | 126.27 | 88.80 | 59.14 | 14.50 | | | | | | |
| | 4 Wire Unbundled Digital Loop 56 Kbps - Zone 1 | | 1 | UDL, NTCUD | UDL56 | 26.09 | 126.27 | 88.80 | 59.14 | 14.50 | | | | | | |
| | 4 Wire Unbundled Digital Loop 56 Kbps - Zone 2 | | 2 | UDL, NTCUD | UDL56 | 35.95 | 126.27 | 88.80 | 59.14 | 14.50 | | | | | | |
| | 4 Wire Unbundled Digital Loop 56 Kbps - Zone 3 | | 3 | UDL, NTCUD | UDL56 | 37.88 | 126.27 | 88.80 | 59.14 | 14.50 | | | | | | |
| | 4 Wire Unbundled Digital Loop 64 Kbps - Zone 1 | | 1 | UDL, NTCUD | UDL64 | 26.09 | 126.27 | 88.80 | 59.14 | 14.50 | | | | | | |
| | 4 Wire Unbundled Digital Loop 64 Kbps - Zone 2 | | 2 | UDL, NTCUD | UDL64 | 35.95 | 126.27 | 88.80 | 59.14 | 14.50 | | | | | | |
| | 4 Wire Unbundled Digital Loop 64 Kbps - Zone 3 | | 3 | UDL, NTCUD | UDL64 | 37.88 | 126.27 | 88.80 | 59.14 | 14.50 | | | | | | |

| UNBUNDLED NETWORK ELEMENTS - Alabama | | | | | | | | | | | | | | Attachment: 2 Exh. A | | | |
|---|---|---|---|---|---|---|---|---|---|---|---|---|---|---|---|---|---|
| CATEGORY | | RATE ELEMENTS | Interim | Zone | BCS | USOC | RATES($) | | | | | Svc Order Submitted Elec per LSR | Svc Order Submitted Manually per LSR | Incremental Charge - Manual Svc Order vs. Electronic-1st | Incremental Charge - Manual Svc Order vs. Electronic-Add'l | Incremental Charge - Manual Svc Order vs. Electronic-Disc 1st | Incremental Charge - Manual Svc Order vs. Electronic-Disc Add'l |
| | | | | | | | Rec | Nonrecurring | | Nonrecurring Disconnect | | OSS Rates($) | | | | | |
| | | | | | | | | First | Add'l | First | Add'l | SOMEC | SOMAN | SOMAN | SOMAN | SOMAN | SOMAN |
| | | Switch-As-Is Conversion rate per UNE Loop, single LSR, (per DS0) | | | UDL, NTCUD | URESL | | 21.91 | 3.15 | | | | | | | | |
| | | Switch-As-Is Conversion rate per UNE Loop, Spreadsheet, (per DS0) | | | UDL, NTCUD | URESP | | 23.32 | 4.56 | | | | | | | | |
| | | CLEC to CLEC Conversion Charge without outside dispatch | | | UDL, NTCUD | UREWO | | 102.13 | 49.75 | | | | | | | | |
| | **2-WIRE Unbundled COPPER LOOP** | | | | | | | | | | | | | | | | |
| | | 2-Wire Unbundled Copper Loop-Designed including manual service inquiry & facility reservation - Zone 1 | | 1 | UCL | UCLPB | 11.01 | 112.46 | 65.30 | 47.24 | 7.44 | | | | | | |
| | | 2-Wire Unbundled Copper Loop-Designed including manual service inquiry & facility reservation - Zone 2 | | 2 | UCL | UCLPB | 12.73 | 112.46 | 65.30 | 47.24 | 7.44 | | | | | | |
| | | 2 Wire Unbundled Copper Loop-Designed including manual service inquiry & facility reservation - Zone 3 | | 3 | UCL | UCLPB | 14.30 | 112.46 | 65.30 | 47.24 | 7.44 | | | | | | |
| | | Order Coordination for Unbundled Copper Loops (per loop) | | | UCL | UCLMC | | 8.15 | 8.15 | | | | | | | | |
| | | 2-Wire Unbundled Copper Loop-Designed without manual service inquiry and facility reservation - Zone 1 | | 1 | UCL | UCLPW | 11.01 | 91.46 | 54.30 | 47.24 | 7.44 | | | | | | |
| | | 2-Wire Unbundled Copper Loop-Designed without manual service inquiry and facility reservation - Zone 2 | | 2 | UCL | UCLPW | 12.73 | 91.46 | 54.30 | 47.24 | 7.44 | | | | | | |
| | | 2-Wire Unbundled Copper Loop-Designed without manual service inquiry and facility reservation - Zone 3 | | 3 | UCL | UCLPW | 14.30 | 91.46 | 54.30 | 47.24 | 7.44 | | | | | | |
| | | Order Coordination for Unbundled Copper Loops (per loop) | | | UCL | UCLMC | | 8.15 | 8.15 | | | | | | | | |
| | | CLEC to CLEC Conversion Charge without outside dispatch (UCL-Des) | | | UCL | UREWO | | 97.23 | 42.48 | | | | | | | | |
| | **4-WIRE COPPER LOOP** | | | | | | | | | | | | | | | | |
| | | 4-Wire Copper Loop-Designed including manual service inquiry and facility reservation - Zone 1 | | 1 | UCL | UCL4S | 17.36 | 135.21 | 88.05 | 51.70 | 9.73 | | | | | | |
| | | 4-Wire Copper Loop-Designed including manual service inquiry and facility reservation - Zone 2 | | 2 | UCL | UCL4S | 20.76 | 135.21 | 88.05 | 51.70 | 9.73 | | | | | | |
| | | 4-Wire Copper Loop-Designed including manual service inquiry and facility reservation - Zone 3 | | 3 | UCL | UCL4S | 28.21 | 135.21 | 88.05 | 51.70 | 9.73 | | | | | | |
| | | 4-Wire Copper Loop-Designed without manual service inquiry and facility reservation - Zone 1 | | 1 | UCL | UCL4W | 17.36 | 114.21 | 67.05 | 51.70 | 9.73 | | | | | | |
| | | 4-Wire Copper Loop-Designed without manual service inquiry and facility reservation - Zone 2 | | 2 | UCL | UCL4W | 20.76 | 114.21 | 67.05 | 51.70 | 9.73 | | | | | | |
| | | 4-Wire Copper Loop-Designed without manual service inquiry and facility reservation - Zone 3 | | 3 | UCL | UCL4W | 28.21 | 114.21 | 67.05 | 51.70 | 9.73 | | | | | | |
| | | Order Coordination for Unbundled Copper Loops (per loop) | | | UCL | UCLMC | | 8.15 | 8.15 | | | | | | | | |
| | | CLEC to CLEC conversion Charge without outside dispatch | | | UCL | UREWO | | 97.23 | 42.48 | | | | | | | | |
| | | Order Coordination for Unbundled Copper Loops (per loop) | | | UCL | UCLMC | | 8.15 | 8.15 | | | | | | | | |
| | | Order Coordination for Specified Conversion Time (per LSR) | | | UEA, UDN, UAL, UHL, UDL, NTCVG, NTCUD, USL, NTCD1, UEANL | OCOSL | | 18.09 | | | | | | | | | |
| **LOOP MODIFICATION** | | | | | | | | | | | | | | | | | |
| | | Unbundled Loop Modification, Removal of Load Coils - 2 Wire pair less than or equal to 18k ft. per Unbundled Loop | | | UAL, UHL, UCL, UEQ, ULS, UEA, UEANL, UEPSR, UEPSB | ULM2L | | 0.00 | 0.00 | | | | | | | | |
| | | Unbundled Loop Modification Removal of Load Coils - 4 Wire less than or equal to 18K ft, per Unbundled Loop | | | UHL, UCL, UEA | ULM4L | | 0.00 | 0.00 | | | | | | | | |
| | | Unbundled Loop Modification Removal of Bridged Tap Removal, per unbundled loop | | | UAL, UHL, UCL, UEQ,ULS,UEA, UEANL, UEPSR, UEPSB | ULMBT | | 32.41 | 32.41 | | | | | | | | |
| **SUB-LOOPS** | | | | | | | | | | | | | | | | | |
| | **Sub-Loop Distribution** | | | | | | | | | | | | | | | | |
| | | Sub-Loop - Per Cross Box Location - CLEC Feeder Facility Set-Up | | | UEANL, UEF | USBSA | | 244.42 | | | | | | | | | |
| | | Sub-Loop - Per Cross Box Location - Per 25 Pair Panel Set-Up | | | UEANL, UEF | USBSB | | 22.64 | | | | | | | | | |

| UNBUNDLED NETWORK ELEMENTS - Alabama | | | | | | | | | | | | | | Attachment: 2 Exh. A | | | |
|---|---|---|---|---|---|---|---|---|---|---|---|---|---|---|---|---|---|
| CATEGORY | | RATE ELEMENTS | Interim | Zone | BCS | USOC | RATES($) | | | | | Svc Order Submitted Elec per LSR | Svc Order Submitted Manually per LSR | Incremental Charge - Manual Svc Order vs. Electronic-1st | Incremental Charge - Manual Svc Order vs. Electronic-Add'l | Incremental Charge - Manual Svc Order vs. Electronic-Disc 1st | Incremental Charge - Manual Svc Order vs. Electronic-Disc Add'l |
| | | | | | | | Rec | Nonrecurring | | Nonrecurring Disconnect | | OSS Rates($) | | | | | |
| | | | | | | | | First | Add'l | First | Add'l | SOMEC | SOMAN | SOMAN | SOMAN | SOMAN | SOMAN |
| | | Sub-Loop - Per Building Equipment Room - CLEC Feeder Facility Set-Up | | | UEANL | USBSC | | 177.45 | | | | | | | | | |
| | | Sub-Loop - Per Building Equipment Room - Per 25 Pair Panel Set-Up | | | UEANL | USBSD | | 55.15 | | | | | | | | | |
| | | Sub-Loop Distribution Per 2-Wire Analog Voice Grade Loop - Zone 1 | | 1 | UEANL | USBN2 | 11.21 | 65.80 | 30.96 | 45.25 | 6.70 | | | | | | |
| | | Sub-Loop Distribution Per 2-Wire Analog Voice Grade Loop - Zone 2 | | 2 | UEANL | USBN2 | 11.94 | 65.80 | 30.96 | 45.25 | 6.70 | | | | | | |
| | | Sub-Loop Distribution Per 2-Wire Analog Voice Grade Loop - Zone 3 | | 3 | UEANL | USBN2 | 16.86 | 65.80 | 30.96 | 45.25 | 6.70 | | | | | | |
| | | Order Coordination for Unbundled Sub-Loops, per sub-loop pair | | | UEANL | USBMC | | 8.15 | 8.15 | | | | | | | | |
| | | Sub-Loop Distribution Per 4-Wire Analog Voice Grade Loop - Zone 1 | | 1 | UEANL | USBN4 | 8.46 | 79.03 | 44.19 | 49.71 | 9.07 | | | | | | |
| | | Sub-Loop Distribution Per 4-Wire Analog Voice Grade Loop - Zone 2 | | 2 | UEANL | USBN4 | 16.67 | 79.03 | 44.19 | 49.71 | 9.07 | | | | | | |
| | | Sub-Loop Distribution Per 4-Wire Analog Voice Grade Loop - Zone 3 | | 3 | UEANL | USBN4 | 32.57 | 79.03 | 44.19 | 49.71 | 9.07 | | | | | | |
| | | Order Coordination for Unbundled Sub-Loops, per sub-loop pair | | | UEANL | USBMC | | 8.15 | 8.15 | | | | | | | | |
| | | Sub-Loop 2-Wire Intrabuilding Network Cable (INC) | | | UEANL | USBR2 | 2.27 | 53.01 | 18.17 | 45.25 | 6.70 | | | | | | |
| | | Order Coordination for Unbundled Sub-Loops, per sub-loop pair | | | UEANL | USBMC | | 8.15 | 8.15 | | | | | | | | |
| | | Sub-Loop 4-Wire Intrabuilding Network Cable (INC) | | | UEANL | USBR4 | 5.16 | 59.25 | 24.41 | 49.71 | 9.07 | | | | | | |
| | | Order Coordination for Unbundled Sub-Loops, per sub-loop pair | | | UEANL | USBMC | | 8.15 | 8.15 | | | | | | | | |
| | | Loop Testing - Basic 1st Half Hour | | | UEANL | URET1 | | 34.16 | 0.00 | | | | | | | | |
| | | Loop Testing - Basic Additional Half Hour | | | UEANL | URETA | | 19.85 | 19.85 | | | | | | | | |
| | | 2 Wire Copper Unbundled Sub-Loop Distribution - Zone 1 | | 1 | UEF | UCS2X | 6.22 | 65.80 | 30.96 | 45.25 | 6.70 | | | | | | |
| | | 2 Wire Copper Unbundled Sub-Loop Distribution - Zone 2 | | 2 | UEF | UCS2X | 8.76 | 65.80 | 30.96 | 45.25 | 6.70 | | | | | | |
| | | 2 Wire Copper Unbundled Sub-Loop Distribution - Zone 3 | | 3 | UEF | UCS2X | 11.27 | 65.80 | 30.96 | 45.25 | 6.70 | | | | | | |
| | | Order Coordination for Unbundled Sub-Loops, per sub-loop pair | | | UEF | USBMC | | 8.15 | 8.15 | | | | | | | | |
| | | 4 Wire Copper Unbundled Sub-Loop Distribution - Zone 1 | | 1 | UEF | UCS4X | 6.11 | 79.03 | 44.19 | 49.71 | 9.07 | | | | | | |
| | | 4 Wire Copper Unbundled Sub-Loop Distribution - Zone 2 | | 2 | UEF | UCS4X | 12.61 | 79.03 | 44.19 | 49.71 | 9.07 | | | | | | |
| | | 4 Wire Copper Unbundled Sub-Loop Distribution - Zone 3 | | 3 | UEF | UCS4X | 15.36 | 79.03 | 44.19 | 49.71 | 9.07 | | | | | | |
| | | Order Coordination for Unbundled Sub-Loops, per sub-loop pair | | | UEF | USBMC | | 8.15 | 8.15 | | | | | | | | |
| | | Loop Tagging Service Level 1, Unbundled Copper Loop, Non-Designed and Distribution Subloops | | | UEF, UEANL | URETL | | 8.93 | 0.88 | | | | | | | | |
| | | Loop Testing - Basic 1st Half Hour | | | UEF | URET1 | | 34.16 | 0.00 | | | | | | | | |
| | | Loop Testing - Basic Additional Half Hour | | | UEF | URETA | | 19.85 | 19.85 | | | | | | | | |
| | **Unbundled Sub-Loop Modification** | | | | | | | | | | | | | | | | |
| | | Unbundled Sub-Loop Modification - 2-W Copper Dist Load Coil/Equip Removal per 2-W PR | | | UEF | ULM2X | | 175.78 | 5.10 | | | | | | | | |
| | | Unbundled Sub-loop Modification - 4-W Copper Dist Load Coil/Equip Removal per 4-W PR | | | UEF | ULM4X | | 175.78 | 5.10 | | | | | | | | |
| | | Unbundled Loop Modification, Removal of Bridge Tap, per unbundled loop | | | UEF | ULMBT | | 278.20 | 6.11 | | | | | | | | |
| | **Unbundled Network Terminating Wire (UNTW)** | | | | | | | | | | | | | | | | |
| | | Unbundled Network Terminating Wire (UNTW) per Pair | | | UENTW | UENPP | 0.40 | 30.01 | | | | | | | | | |
| | **Network Interface Device (NID)** | | | | | | | | | | | | | | | | |
| | | Network Interface Device (NID) - 1-2 lines | | | UENTW | UND12 | | 43.23 | 28.38 | | | | | | | | |
| | | Network Interface Device (NID) - 1-6 lines | | | UENTW | UND16 | | 63.97 | 49.11 | | | | | | | | |
| | | Network Interface Device Cross Connect - 2 W | | | UENTW | UNDC2 | | 5.87 | 5.87 | | | | | | | | |
| | | Network Interface Device Cross Connect - 4W | | | UENTW | UNDC4 | | 5.87 | 5.87 | | | | | | | | |
| **UNE OTHER, PROVISIONING ONLY - NO RATE** | | | | | | | | | | | | | | | | | |

| CATEGORY | | RATE ELEMENTS | Interim | Zone | BCS | USOC | RATES($) | | | | | Svc Order Submitted Elec per LSR | Svc Order Submitted Manually per LSR | Incremental Charge - Manual Svc Order vs. Electronic-1st | Incremental Charge - Manual Svc Order vs. Electronic-Add'l | Incremental Charge - Manual Svc Order vs. Electronic-Disc 1st | Incremental Charge - Manual Svc Order vs. Electronic-Disc Add'l |
|---|---|---|---|---|---|---|---|---|---|---|---|---|---|---|---|---|---|
| | | | | | | | Rec | Nonrecurring | | Nonrecurring Disconnect | | OSS Rates($) | | | | | |
| | | | | | | | | First | Add'l | First | Add'l | SOMEC | SOMAN | SOMAN | SOMAN | SOMAN | SOMAN |
| | | Unbundled Contact Name, Provisioning Only - no rate | | | UAL, UCL, UDC, UDL, UDN, UEA, UHL, UEANL, UEF, UEQ, UENTW, NTCVG, NTCUD, NTCD1, USL | UNECN | 0.00 | 0.00 | | | | | | | | | |
| | | Unbundled DS1 Loop - Superframe Format Option - no rate | | | USL | CCOSF | 0.00 | 0.00 | | | | | | | | | |
| | | Unbundled DS1 Loop - Expanded Superframe Format option - no rate | | | USL | CCOEF | 0.00 | 0.00 | | | | | | | | | |
| | | NID - Dispatch and Service Order for NID installation | | | UENTW | UNDBX | 0.00 | 0.00 | | | | | | | | | |
| | | UNTW Circuit Establishment, Provisioning Only - No Rate | | | UENTW | UENCE | 0.00 | 0.00 | | | | | | | | | |
| **HIGH CAPACITY UNBUNDLED LOCAL LOOP** | | | | | | | | | | | | | | | | | |
| | **NOTE: minimum billing period of three months for DS3/STS-1 Local Loop** | | | | | | | | | | | | | | | | |
| | | High Capacity Unbundled Local Loop - DS3 - Per Mile per month | | | UE3 | 1L5ND | 8.38 | | | | | | | | | | |
| | | High Capacity Unbundled Local Loop - DS3 - Facility Termination per month | | | UE3 | UE3PX | 308.98 | 451.52 | 263.94 | 119.49 | 83.58 | | | | | | |
| | | High Capacity Unbundled Local Loop - STS-1 - Per Mile per month | | | UDLSX | 1L5ND | 8.38 | | | | | | | | | | |
| | | High Capacity Unbundled Local Loop - STS-1 - Facility Termination per month | | | UDLSX | UDLS1 | 319.83 | 451.52 | 263.94 | 119.49 | 83.58 | | | | | | |
| **LOOP MAKE-UP** | | | | | | | | | | | | | | | | | |
| | | Loop Makeup - Preordering Without Reservation, per working or spare facility queried (Manual). | | | UMK | UMKLW | | 20.00 | 20.00 | | | | | | | | |
| | | Loop Makeup - Preordering With Reservation, per spare facility queried (Manual). | | | UMK | UMKLP | | 21.00 | 21.00 | | | | | | | | |
| | | Loop Makeup--With or Without Reservation, per working or spare facility queried (Mechanized) | | | UMK | UMKMQ | | 0.59 | 0.59 | | | | | | | | |
| **LINE SPLITTING** | | | | | | | | | | | | | | | | | |
| | **END USER ORDERING-CENTRAL OFFICE BASED** | | | | | | | | | | | | | | | | |
| | | Line Splitting - per line activation DLEC owned splitter | | | UEPSR UEPSB | UREOS | 0.61 | | | | | | | | | | |
| | | Line Splitting - per line activation BST owned - physical | | | UEPSR UEPSB | UREBP | 0.61 | 37.01 | 21.19 | 20.02 | 9.83 | | | | | | |
| | | Line Splitting - per line activation BST owned - virtual | | | UEPSR UEPSB | UREBV | 0.61 | 37.01 | 21.19 | 20.02 | 9.83 | | | | | | |
| | **UNBUNDLED EXCHANGE ACCESS LOOP** | | | | | | | | | | | | | | | | |
| | **2-WIRE ANALOG VOICE GRADE LOOP** | | | | | | | | | | | | | | | | |
| | | 2 Wire Analog Voice Grade Loop-Service Level 1-Line Splitting-Zone 1 | | 1 | UEPSR UEPSB | UEALS | 12.58 | 37.81 | 17.56 | 23.49 | 5.30 | | | | | | |
| | | 2 Wire Analog Voice Grade Loop-Service Level 1-Line Splitting-Zone 1 | | 1 | UEPSR UEPSB | UEABS | 12.58 | 37.81 | 17.56 | 23.49 | 5.30 | | | | | | |
| | | 2 Wire Analog Voice Grade Loop- Service Level 1-Line Splitting-Zone 2 | | 2 | UEPSR UEPSB | UEALS | 21.05 | 37.81 | 17.56 | 23.49 | 5.30 | | | | | | |
| | | 2 Wire Analog Voice Grade Loop- Service Level 1-Line Splitting-Zone 2 | | 2 | UEPSR UEPSB | UEABS | 21.05 | 37.81 | 17.56 | 23.49 | 5.30 | | | | | | |
| | | 2 Wire Analog Voice Grade Loop-Service Level 1-Line Splitting-Zone 3 | | 3 | UEPSR UEPSB | UEALS | 34.34 | 37.81 | 17.56 | 23.49 | 5.30 | | | | | | |
| | | 2 Wire Analog Voice Grade Loop-Service Level 1-Line Splitting-Zone 3 | | 3 | UEPSR UEPSB | UEABS | 34.34 | 37.81 | 17.56 | 23.49 | 5.30 | | | | | | |
| | **PHYSICAL COLLOCATION** | | | | | | | | | | | | | | | | |
| | | Physical Collocation-2 Wire Cross Connects (Loop) for Line Splitting | | | UEPSR UEPSB | PE1LS | 0.03 | 12.30 | 11.80 | 6.03 | 5.44 | | | | | | |
| | **VIRTUAL COLLOCATION** | | | | | | | | | | | | | | | | |
| | | Virtual Collocation-2 Wire Cross Connects (Loop) for Line Splitting | | | UEPSR UEPSB | VE1LS | 0.03 | 12.30 | 11.80 | 6.03 | 5.44 | | | | | | |
| **UNBUNDLED DEDICATED TRANSPORT** | | | | | | | | | | | | | | | | | |
| | **INTEROFFICE CHANNEL - DEDICATED TRANSPORT** | | | | | | | | | | | | | | | | |
| | | Interoffice Channel - Dedicated Transport - 2-Wire Voice Grade - Per Mile per month | | | U1TVX | 1L5XX | 0.008838 | | | | | | | | | | |
| | | Interoffice Channel - Dedicated Transport- 2- Wire Voice Grade - Facility Termination | | | U1TVX | U1TV2 | 21.13 | 40.54 | 27.41 | 16.74 | 6.90 | | | | | | |

| UNBUNDLED NETWORK ELEMENTS - Alabama | | | | | | | | | | | | | | Attachment: 2 Exh. A | | | |
|---|---|---|---|---|---|---|---|---|---|---|---|---|---|---|---|---|---|
| CATEGORY | | RATE ELEMENTS | Interim | Zone | BCS | USOC | RATES($) | | | | | Svc Order Submitted Elec per LSR | Svc Order Submitted Manually per LSR | Incremental Charge - Manual Svc Order vs. Electronic-1st | Incremental Charge - Manual Svc Order vs. Electronic-Add'l | Incremental Charge - Manual Svc Order vs. Electronic-Disc 1st | Incremental Charge - Manual Svc Order vs. Electronic-Disc Add'l |
| | | | | | | | Rec | Nonrecurring | | Nonrecurring Disconnect | | OSS Rates($) | | | | | |
| | | | | | | | | First | Add'l | First | Add'l | SOMEC | SOMAN | SOMAN | SOMAN | SOMAN | SOMAN |
| | | Interoffice Channel - Dedicated Transpor t- 2-Wire Voice Grade Rev Bat. - Per Mile per month | | | U1TVX | 1L5XX | 0.008838 | | | | | | | | | | |
| | | Interoffice Channel - Dedicated Transport- 2- Wire VG Rev Bat. - Facility Termination | | | U1TVX | U1TR2 | 21.13 | 40.54 | 27.41 | 16.74 | 6.90 | | | | | | |
| | | Interoffice Channel - Dedicated Transport - 4-Wire Voice Grade - Per Mile per month | | | U1TVX | 1L5XX | 0.008838 | | | | | | | | | | |
| | | Interoffice Channel - Dedicated Transport - 4- Wire Voice Grade - Facility Termination | | | U1TVX | U1TV4 | 18.73 | 40.54 | 27.41 | 16.74 | 6.90 | | | | | | |
| | | Interoffice Channel - Dedicated Transport - 56 kbps - per mile per month | | | U1TDX | 1L5XX | 0.008838 | | | | | | | | | | |
| | | Interoffice Channel - Dedicated Transport - 56 kbps - Facility Termination | | | U1TDX | U1TD5 | 15.12 | 40.54 | 27.41 | 16.74 | 6.90 | | | | | | |
| | | Interoffice Channel - Dedicated Transport - 64 kbps - per mile per month | | | U1TDX | 1L5XX | 0.008838 | | | | | | | | | | |
| | | Interoffice Channel - Dedicated Transport - 64 kbps - Facility Termination | | | U1TDX | U1TD6 | 15.12 | 40.54 | 27.41 | 16.74 | 6.90 | | | | | | |
| | | Wholesale to UNE Switch-As-Is Charge | | | U1TDX | UNCCC | | 5.59 | 5.59 | 6.98 | 6.98 | | | | | | |
| | | Interoffice Channel - Dedicated Channel - DS1 - Per Mile per month | | | U1TD1 | 1L5XX | 0.18 | | | | | | | | | | |
| | | Interoffice Channel - Dedicated Tranport - DS1 - Facility Termination | | | U1TD1 | U1TF1 | 60.16 | 89.27 | 81.81 | 16.35 | 14.44 | | | | | | |
| | | Wholesale to UNE Switch-As-Is Charge | | | U1TD1 | UNCCC | | 5.59 | 5.59 | 6.98 | 6.98 | | | | | | |
| | | Interoffice Channel - Dedicated Transport - DS3 - Per Mile per month | | | U1TD3 | 1L5XX | 4.09 | | | | | | | | | | |
| | | Interoffice Channel - Dedicated Transport - DS3 - Facility Termination per month | | | U1TD3 | U1TF3 | 703.52 | 278.75 | 162.76 | 60.20 | 28.46 | | | | | | |
| | | Wholesale to UNE Switch-As-Is Charge | | | U1TD3 | UNCCC | | 5.59 | 5.59 | 6.98 | 6.98 | | | | | | |
| | | Interoffice Channel - Dedicated Transport - STS-1 - Per Mile per month | | | U1TS1 | 1L5XX | 4.09 | | | | | | | | | | |
| | | Interoffice Channel - Dedicated Transport - STS-1 - Facility Termination | | | U1TS1 | U1TFS | 701.37 | 278.75 | 162.76 | 60.20 | 28.46 | | | | | | |
| | | Wholesale to UNE Switch-As-Is Charge | | | U1TS1 | UNCCC | | 5.59 | 5.59 | 6.98 | 6.98 | | | | | | |
| | **UNBUNDLED DARK FIBER** | | | | | | | | | | | | | | | | |
| | | Dark Fiber, Per Four Fiber Strands, Per Route Mile Or Fraction Thereof - Interoffice Transport | | | UDF, UDFCX | 1L5DF | 22.34 | 639.09 | 137.87 | 317.06 | 197.66 | | | | | | |
| **911 PBX LOCATE** | | | | | | | | | | | | | | | | | |
| | **911 PBX LOCATE DATABASE CAPABILITY** | | | | | | | | | | | | | | | | |
| | | Service Establishment per CLEC per End User Account | | | 9PBDC | 9PBEU | | 1,813.00 | | | | | | | | | |
| | | Changes to TN Range or Customer Profile | | | 9PBDC | 9PBTN | | 181.44 | | | | | | | | | |
| | | Per Telephone Number (Monthly) | | | 9PBDC | 9PBMM | 0.07 | | | | | | | | | | |
| | | Change Company (Service Provider) ID | | | 9PBDC | 9PBPC | | 532.60 | | | | | | | | | |
| | | PBX Locate Service Support per CLEC (Monthlt) | | | 9PBDC | 9PBMR | 181.33 | | | | | | | | | | |
| | | Service Order Charge | | | 9PBDC | 9PBSC | | 15.66 | | | | | | | | | |
| | **911 PBX LOCATE TRANSPORT COMPONENT** | | | | | | | | | | | | | | | | |
| | **See Att 3** | | | | | | | | | | | | | | | | |
| **ENHANCED EXTENDED LINK (EELs)** | | | | | | | | | | | | | | | | | |
| | **NOTE: The monthly recurring and non-recurring charges below will apply and the Switch-As-Is Charge will not apply for UNE combinations provisioned as ' Ordinarily Combined' Network Elements.** | | | | | | | | | | | | | | | | |
| | **NOTE: The monthly recurring and the Switch-As-Is Charge and not the non-recurring charges below will apply for UNE combinations provisioned as ' Currently Combined' Network Elements.** | | | | | | | | | | | | | | | | |
| | **EXTENTED 2-WIRE VOICE GRADE EXTENDED LOOP WITH DEDICATED DS1 INTEROFFICE TRANSPORT** | | | | | | | | | | | | | | | | |
| | | First 2-Wire VG Loop (SL2) in Combination - Zone 1 | | 1 | UNCVX | UEAL2 | 14.38 | 88.00 | 55.00 | 47.24 | 7.44 | | | | | | |
| | | First 2-Wire VG Loop (SL2) in Combination - Zone 2 | | 2 | UNCVX | UEAL2 | 22.85 | 88.00 | 55.00 | 47.24 | 7.44 | | | | | | |
| | | First 2-Wire VG Loop (SL2) in Combination - Zone 3 | | 3 | UNCVX | UEAL2 | 36.14 | 88.00 | 55.00 | 47.24 | 7.44 | | | | | | |
| | | Interoffice Transport - Dedicated - DS1 combination - Per Mile per month | | | UNC1X | 1L5XX | 0.18 | | | | | | | | | | |
| | | Interoffice Transport - Dedicated - DS1 combination - Facility Termination per month | | | UNC1X | U1TF1 | 60.16 | 89.27 | 81.81 | 16.35 | 14.44 | | | | | | |
| | | 1/0 Channelization System in combination Per Month | | | UNC1X | MQ1 | 101.06 | 91.04 | 62.57 | 10.54 | 9.79 | | | | | | |
| | | Voice Grade COCI - Per Month | | | UNCVX | 1D1VG | 0.53 | 6.58 | 4.72 | | | | | | | | |

| CATEGORY | RATE ELEMENTS | Interim | Zone | BCS | USOC | RATES($) | | | | | Svc Order Submitted Elec per LSR | Svc Order Submitted Manually per LSR | Incremental Charge - Manual Svc Order vs. Electronic-1st | Incremental Charge - Manual Svc Order vs. Electronic-Add'l | Incremental Charge - Manual Svc Order vs. Electronic-Disc 1st | Incremental Charge - Manual Svc Order vs. Electronic-Disc Add'l |
|---|---|---|---|---|---|---|---|---|---|---|---|---|---|---|---|---|
| | | | | | | Rec | Nonrecurring | | Nonrecurring Disconnect | | OSS Rates($) | | | | | |
| | | | | | | | First | Add'l | First | Add'l | SOMEC | SOMAN | SOMAN | SOMAN | SOMAN | SOMAN |
| | Each Additional 2-Wire VG Loop (SL 2) in Combination - Zone 1 | | 1 | UNCVX | UEAL2 | 14.38 | 88.00 | 55.00 | 47.24 | 7.44 | | | | | | |
| | Each Additional 2-Wire VG Loop (SL 2) in Combination - Zone 2 | | 2 | UNCVX | UEAL2 | 22.85 | 88.00 | 55.00 | 47.24 | 7.44 | | | | | | |
| | Each Additional 2-Wire VG Loop (SL 2) in Combination - Zone 3 | | 3 | UNCVX | UEAL2 | 36.14 | 88.00 | 55.00 | 47.24 | 7.44 | | | | | | |
| | Voice Grade COCI - Per Month | | | UNCVX | 1D1VG | 0.53 | 6.58 | 4.72 | | | | | | | | |
| | Wholesale to UNE, Switch-As-Is Charge | | | UNC1X | UNCCC | | 5.59 | 5.59 | 6.98 | 6.98 | | | | | | |
| | **EXTENDED 4-WIRE VOICE GRADE EXTENDED LOOP WITH DEDICATED DS1 INTEROFFICE TRANSPORT** | | | | | | | | | | | | | | | |
| | First 4-Wire Analog Voice Grade Loop in Combination - Zone 1 | | 1 | UNCVX | UEAL4 | 25.34 | 131.97 | 94.51 | 59.14 | 14.50 | | | | | | |
| | First 4-Wire Analog Voice Grade Loop in Combination - Zone 2 | | 2 | UNCVX | UEAL4 | 38.58 | 131.97 | 94.51 | 59.14 | 14.50 | | | | | | |
| | First 4-Wire Analog Voice Grade Loop in Combination - Zone 3 | | 3 | UNCVX | UEAL4 | 60.02 | 131.97 | 94.51 | 59.14 | 14.50 | | | | | | |
| | Interoffice Transport - Dedicated - DS1 combination - Per Mile Per Month | | | UNC1X | 1L5XX | 0.18 | | | | | | | | | | |
| | Interoffice Transport - Dedicated - DS1 - Facility Termination Per Month | | | UNC1X | U1TF1 | 60.16 | 89.27 | 81.81 | 16.35 | 14.44 | | | | | | |
| | 1/0 Channel System in combination Per Month | | | UNC1X | MQ1 | 101.06 | 91.04 | 62.57 | 10.54 | 9.79 | | | | | | |
| | Voice Grade COCI in combination - per month | | | UNCVX | 1D1VG | 0.53 | 6.58 | 4.72 | | | | | | | | |
| | Additional 4-Wire Analog Voice Grade Loop in same DS1 Interoffice Transport Combination - Zone 1 | | 1 | UNCVX | UEAL4 | 25.34 | 131.97 | 94.51 | 59.14 | 14.50 | | | | | | |
| | Additional 4-Wire Analog Voice Grade Loop in same DS1 Interoffice Transport Combination - Zone 2 | | 2 | UNCVX | UEAL4 | 38.58 | 131.97 | 94.51 | 59.14 | 14.50 | | | | | | |
| | Additional 4-Wire Analog Voice Grade Loop in same DS1 Interoffice Transport Combination - Zone 3 | | 3 | UNCVX | UEAL4 | 60.02 | 131.97 | 94.51 | 59.14 | 14.50 | | | | | | |
| | Additional Voice Grade COCI in combination - per month | | | UNCVX | 1D1VG | 0.53 | 6.58 | 4.72 | | | | | | | | |
| | Wholesale to UNE, Switch-As-Is Charge | | | UNC1X | UNCCC | | 5.59 | 5.59 | 6.98 | 6.98 | | | | | | |
| | **EXTENDED 4-WIRE 56 KBPS EXTENDED DIGITAL LOOP WITH DEDICATED DS1 INTEROFFICE TRANSPORT** | | | | | | | | | | | | | | | |
| | First 4-Wire 56Kbps Digital Grade Loop in Combination - Zone 1 | | 1 | UNCDX | UDL56 | 26.09 | 126.27 | 88.80 | 59.14 | 14.50 | | | | | | |
| | First 4-Wire 56Kbps Digital Grade Loop in Combination - Zone 2 | | 2 | UNCDX | UDL56 | 35.95 | 126.27 | 88.80 | 59.14 | 14.50 | | | | | | |
| | First 4-Wire 56Kbps Digital Grade Loop in Combination - Zone 3 | | 3 | UNCDX | UDL56 | 37.88 | 126.27 | 88.80 | 59.14 | 14.50 | | | | | | |
| | Interoffice Transport - Dedicated - DS1 combination - Per Mile Per Month | | | UNC1X | 1L5XX | 0.18 | | | | | | | | | | |
| | Interoffice Transport - Dedicated - DS1 - combination Facility Termination Per Month | | | UNC1X | U1TF1 | 60.16 | 89.27 | 81.81 | 16.35 | 14.44 | | | | | | |
| | 1/0 Channel System in combination Per Month | | | UNC1X | MQ1 | 101.06 | 91.04 | 62.57 | 10.54 | 9.79 | | | | | | |
| | OCU-DP COCI (data) per month (2.4-64kbs) | | | UNCDX | 1D1DD | 1.12 | 6.58 | 4.72 | | | | | | | | |
| | Additional 4-Wire 56Kbps Digital Grade Loop in same DS1 Interoffice Transport Combination - Zone 1 | | 1 | UNCDX | UDL56 | 26.09 | 126.27 | 88.80 | 59.14 | 14.50 | | | | | | |
| | Additional 4-Wire 56Kbps Digital Grade Loop in same DS1 Interoffice Transport Combination - Zone 2 | | 2 | UNCDX | UDL56 | 35.95 | 126.27 | 88.80 | 59.14 | 14.50 | | | | | | |
| | Additional 4-Wire 56Kbps Digital Grade Loop in same DS1 Interoffice Transport Combination - Zone 3 | | 3 | UNCDX | UDL56 | 37.88 | 126.27 | 88.80 | 59.14 | 14.50 | | | | | | |
| | Additional OCU-DP COCI (data) - in combination per month (2.4-64kbs) | | | UNCDX | 1D1DD | 1.12 | 6.58 | 4.72 | | | | | | | | |
| | Wholesale to UNE, Switch-As-Is Charge | | | UNC1X | UNCCC | | 5.59 | 5.59 | 6.98 | 6.98 | | | | | | |
| | **EXTENDED 4-WIRE 64 KBPS EXTENDED DIGITAL LOOP WITH DEDICATED DS1 INTEROFFICE TRANSPORT** | | | | | | | | | | | | | | | |
| | First 4-Wire 64Kbps Digital Grade Loop in Combination - Zone 1 | | 1 | UNCDX | UDL64 | 26.09 | 126.27 | 88.80 | 59.14 | 14.50 | | | | | | |
| | First 4-Wire 64Kbps Digital Grade Loop in Combination - Zone 2 | | 2 | UNCDX | UDL64 | 35.95 | 126.27 | 88.80 | 59.14 | 14.50 | | | | | | |
| | First 4-Wire 64Kbps Digital Grade Loop in Combination - Zone 3 | | 3 | UNCDX | UDL64 | 37.88 | 126.27 | 88.80 | 59.14 | 14.50 | | | | | | |

## UNBUNDLED NETWORK ELEMENTS - Alabama

Attachment: 2 Exh. A

| CATEGORY | RATE ELEMENTS | Interim | Zone | BCS | USOC | RATES($) | | | | | Svc Order Submitted Elec per LSR | Svc Order Submitted Manually per LSR | Incremental Charge - Manual Svc Order vs. Electronic-1st | Incremental Charge - Manual Svc Order vs. Electronic-Add'l | Incremental Charge - Manual Svc Order vs. Electronic-Disc 1st | Incremental Charge - Manual Svc Order vs. Electronic-Disc Add'l |
|---|---|---|---|---|---|---|---|---|---|---|---|---|---|---|---|---|
| | | | | | | Rec | Nonrecurring | | Nonrecurring Disconnect | | OSS Rates($) | | | | | |
| | | | | | | | First | Add'l | First | Add'l | SOMEC | SOMAN | SOMAN | SOMAN | SOMAN | SOMAN |
| | Interoffice Transport - Dedicated - DS1 combination - Per Mile Per Month | | | UNC1X | 1L5XX | 0.18 | | | | | | | | | | |
| | interoffice Transport - Dedicated - DS1 combination - Facility Termination Per Month | | | UNC1X | U1TF1 | 60.16 | 89.27 | 81.81 | 16.35 | 14.44 | | | | | | |
| | 1/0 Channel System in combination Per Month | | | UNC1X | MQ1 | 101.06 | 91.04 | 62.57 | 10.54 | 9.79 | | | | | | |
| | OCU-DP COCI (data) - in combination - per month (2.4-64kbs) | | | UNCDX | 1D1DD | 1.12 | 6.58 | 4.72 | | | | | | | | |
| | Additional 4-Wire 64Kbps Digital Grade Loop in same DS1 Interoffice Transport Combination - Zone 1 | | 1 | UNCDX | UDL64 | 26.09 | 126.27 | 88.80 | 59.14 | 14.50 | | | | | | |
| | Additional 4-Wire 64Kbps Digital Grade Loop in same DS1 Interoffice Transport Combination - Zone 2 | | 2 | UNCDX | UDL64 | 35.95 | 126.27 | 88.80 | 59.14 | 14.50 | | | | | | |
| | Additional 4-Wire 64Kbps Digital Grade Loop in same DS1 Interoffice Transport Combination - Zone 3 | | 3 | UNCDX | UDL64 | 37.88 | 126.27 | 88.80 | 59.14 | 14.50 | | | | | | |
| | Additional OCU-DP COCI (data) - in combination - per month (2.4-64kbs) | | | UNCDX | 1D1DD | 1.12 | 6.58 | 4.72 | | | | | | | | |
| | Wholesale to UNE, Switch-As-Is Charge | | | UNC1X | UNCCC | | 5.59 | 5.59 | 6.98 | 6.98 | | | | | | |
| | **EXTENDED 4-WIRE DS1 DIGITAL EXTENDED LOOP WITH DEDICATED DS1 INTEROFFICE TRANSPORT** | | | | | | | | | | | | | | | |
| | 4-Wire DS1 Digital Loop in Combination - Zone 1 | | 1 | UNC1X | USLXX | 82.55 | 252.47 | 157.54 | 44.70 | 11.71 | | | | | | |
| | 4-Wire DS1 Digital Loop in Combination - Zone 2 | | 2 | UNC1X | USLXX | 154.18 | 252.47 | 157.54 | 44.70 | 11.71 | | | | | | |
| | 4-Wire DS1 Digital Loop in Combination - Zone 3 | | 3 | UNC1X | USLXX | 314.52 | 252.47 | 157.54 | 44.70 | 11.71 | | | | | | |
| | Interoffice Transport - Dedicated - DS1 combination - Per Mile Per Month | | | UNC1X | 1L5XX | 0.18 | | | | | | | | | | |
| | Interoffice Transport - Dedicated - DS1 combination - Facility Termination Per Month | | | UNC1X | U1TF1 | 60.16 | 89.27 | 81.81 | 16.35 | 14.44 | | | | | | |
| | Wholesale to UNE, Switch-As-Is Charge | | | UNC1X | UNCCC | | 5.59 | 5.59 | 6.98 | 6.98 | | | | | | |
| | **EXTENDED 4-WIRE DS1 DIGITAL EXTENDED LOOP WITH DEDICATED DS3 INTEROFFICE TRANSPORT** | | | | | | | | | | | | | | | |
| | First DS1Loop in Combination - Zone 1 | | 1 | UNC1X | USLXX | 82.55 | 252.47 | 157.54 | 44.70 | 11.71 | | | | | | |
| | First DS1Loop in Combination - Zone 2 | | 2 | UNC1X | USLXX | 154.18 | 252.47 | 157.54 | 44.70 | 11.71 | | | | | | |
| | First DS1Loop in Combination - Zone 3 | | 3 | UNC1X | USLXX | 314.52 | 252.47 | 157.54 | 44.70 | 11.71 | | | | | | |
| | Interoffice Transport - Dedicated - DS3 combination - Per Mile Per Month | | | UNC3X | 1L5XX | 4.09 | | | | | | | | | | |
| | Interoffice Transport - Dedicated - DS3 - Facility Termination per month | | | UNC3X | U1TF3 | 703.52 | 278.75 | 162.76 | 60.20 | 58.46 | | | | | | |
| | 3/1 Channel System in combination per month | | | UNC3X | MQ3 | 166.13 | 178.14 | 93.97 | 33.26 | 31.83 | | | | | | |
| | DS1 COCI in combination per month | | | UNC1X | UC1D1 | 12.70 | 6.58 | 4.72 | | | | | | | | |
| | Additional DS1Loop in DS3 Interoffice Transport Combination - Zone 1 | | 1 | UNC1X | USLXX | 82.55 | 252.47 | 157.54 | 44.70 | 11.71 | | | | | | |
| | Additional DS1Loop in DS3 Interoffice Transport Combination - Zone 2 | | 2 | UNC1X | USLXX | 154.18 | 252.47 | 157.54 | 44.70 | 11.71 | | | | | | |
| | Additional DS1Loop in DS3 Interoffice Transport Combination - Zone 3 | | 3 | UNC1X | USLXX | 314.52 | 252.47 | 157.54 | 44.70 | 11.71 | | | | | | |
| | Additoinal DS1 COCI in combination per month | | | UNC1X | UC1D1 | 12.70 | 6.58 | 4.72 | | | | | | | | |
| | Wholesale to UNE, Switch-As-Is Charge | | | UNC3X | UNCCC | | 5.59 | 5.59 | 6.98 | 6.98 | | | | | | |
| | **EXTENDED 2-WIRE VOICE GRADE EXTENDED LOOP/ 2 WIRE VOICE GRADE INTEROFFICE TRANSPORT** | | | | | | | | | | | | | | | |
| | 2-WireVG Loop in combination - Zone 1 | | 1 | UNCVX | UEAL2 | 14.38 | 88.00 | 55.00 | 47.24 | 7.44 | | | | | | |
| | 2-WireVG Loop in combination - Zone 2 | | 2 | UNCVX | UEAL2 | 22.85 | 88.00 | 55.00 | 47.24 | 7.44 | | | | | | |
| | 2-WireVG Loop in combination - Zone 3 | | 3 | UNCVX | UEAL2 | 36.14 | 88.00 | 55.00 | 47.24 | 7.44 | | | | | | |
| | Interoffice Transport - 2-wire VG - Dedicated- Per Mile Per Month | | | UNCVX | 1L5XX | 0.008838 | | | | | | | | | | |
| | Interoffice Transport - 2-wire VG - Dedicated - Facility Termination per month | | | UNCVX | U1TV2 | 21.13 | 40.54 | 27.41 | 16.74 | 6.90 | | | | | | |
| | Wholesale to UNE, Switch-As-Is Charge | | | UNCVX | UNCCC | | 5.59 | 5.59 | 6.98 | 6.98 | | | | | | |
| | **EXTENDED 4-WIRE VOICE GRADE EXTENDED LOOP/ 4 WIRE VOICE GRADE INTEROFFICE TRANSPORT** | | | | | | | | | | | | | | | |
| | 4-WireVG Loop in combination - Zone 1 | | 1 | UNCVX | UEAL4 | 25.34 | 131.97 | 94.51 | 59.14 | 14.50 | | | | | | |
| | 4-WireVG Loop in combination - Zone 2 | | 2 | UNCVX | UEAL4 | 38.58 | 131.97 | 94.51 | 59.14 | 14.50 | | | | | | |
| | 4-WireVG Loop in combination - Zone 3 | | 3 | UNCVX | UEAL4 | 60.02 | 131.97 | 94.51 | 59.14 | 14.50 | | | | | | |
| | Interoffice Transport - 4-wire VG - Dedicated - Per Mile Per Month | | | UNCVX | 1L5XX | 0.008838 | | | | | | | | | | |
| | Interoffice Transport - 4-wire VG - Dedicated - Facility Termination per month | | | UNCVX | U1TV4 | 18.73 | 40.54 | 27.41 | 16.74 | 6.90 | | | | | | |

| CATEGORY | RATE ELEMENTS | Interim | Zone | BCS | USOC | RATES($) | | | | | Svc Order Submitted Elec per LSR | Svc Order Submitted Manually per LSR | Incremental Charge - Manual Svc Order vs. Electronic-1st | Incremental Charge - Manual Svc Order vs. Electronic-Add'l | Incremental Charge - Manual Svc Order vs. Electronic-Disc 1st | Incremental Charge - Manual Svc Order vs. Electronic-Disc Add'l |
|---|---|---|---|---|---|---|---|---|---|---|---|---|---|---|---|---|
| | | | | | | Rec | Nonrecurring | | Nonrecurring Disconnect | | OSS Rates($) | | | | | |
| | | | | | | | First | Add'l | First | Add'l | SOMEC | SOMAN | SOMAN | SOMAN | SOMAN | SOMAN |
| | Wholesale to UNE, Switch-As-Is Charge | | | UNCVX | UNCCC | | 5.59 | 5.59 | 6.98 | 6.98 | | | | | | |
| | **EXTENDED DS3 DIGITAL EXTENDED LOOP WITH DEDICATED DS3 INTEROFFICE TRANSPORT** | | | | | | | | | | | | | | | |
| | DS3 Local Loop in combination - per mile per month | | | UNC3X | 1L5ND | 8.38 | | | | | | | | | | |
| | DS3 Local Loop in combination - Facility Termination per month | | | UNC3X | UE3PX | 308.98 | 451.52 | 263.94 | 119.49 | 83.58 | | | | | | |
| | Interoffice Transport - Dedicated - DS3 - Per Mile per month | | | UNC3X | 1L5XX | 4.09 | | | | | | | | | | |
| | Interoffice Transport - Dedicated - DS3 combination - Facility Termination per per month | | | UNC3X | U1TF3 | 703.52 | 278.75 | 162.76 | 60.20 | 58.46 | | | | | | |
| | Wholesale to UNE, Switch-As-Is Charge | | | UNC3X | UNCCC | | 5.59 | 5.59 | 6.98 | 6.98 | | | | | | |
| | **EXTENDED STS-1 DIGITAL EXTENDED LOOP WITH DEDICATED STS-1 INTEROFFICE TRANSPORT** | | | | | | | | | | | | | | | |
| | STS-1 Local Lolp in combination - per mile per month | | | UNCSX | 1L5ND | 8.38 | | | | | | | | | | |
| | STS-1 Local Loop in combination - Facility Termination per month | | | UNCSX | UDLS1 | 319.83 | 451.52 | 263.94 | 119.49 | 83.58 | | | | | | |
| | Interoffice Transport - Dedicated - STS-1 combination - per mile per month | | | UNCSX | 1L5XX | 4.09 | | | | | | | | | | |
| | Interoffice Transport - Dedicated - STS-1 combination - Facility Termination per month | | | UNCSX | U1TFS | 701.37 | 278.75 | 162.76 | 60.20 | 58.46 | | | | | | |
| | Wholesale to UNE, Switch-As-Is Charge | | | UNCSX | UNCCC | | 5.59 | 5.59 | 6.98 | 6.98 | | | | | | |
| | **EXTENDED 2-WIRE ISDN EXTENDED LOOP WITH DS1 INTEROFFICE TRANSPORT** | | | | | | | | | | | | | | | |
| | First 2-Wire ISDN Loop in Combination - Zone 1 | | 1 | UNCNX | U1L2X | 21.88 | 117.24 | 79.77 | 52.88 | 10.54 | | | | | | |
| | First 2-Wire ISDN Loop in Combination - Zone 2 | | 2 | UNCNX | U1L2X | 32.85 | 117.24 | 79.77 | 52.88 | 10.54 | | | | | | |
| | First 2-Wire ISDN Loop in Combination - Zone 3 | | 3 | UNCNX | U1L2X | 48.55 | 117.24 | 79.77 | 52.88 | 10.54 | | | | | | |
| | Interoffice Transport - Dedicated - DS1 combination - per mile per month | | | UNC1X | 1L5XX | 0.18 | | | | | | | | | | |
| | Interoffice Transport - Dedicated - DS1 combination - Facility Termination per month | | | UNC1X | U1TF1 | 60.16 | 89.27 | 81.81 | 16.35 | 14.44 | | | | | | |
| | 1/0 Channel System in combination - per month | | | UNC1X | MQ1 | 101.06 | 91.04 | 62.57 | 10.54 | 9.79 | | | | | | |
| | 2-wire ISDN COCI (BRITE) - in combination - per month | | | UNCNX | UC1CA | 2.41 | 6.58 | 4.72 | | | | | | | | |
| | Additional 2-wire ISDN Loop in same DS1Interoffice Transport Combination - Zone 1 | | 1 | UNCNX | U1L2X | 21.88 | 117.24 | 79.77 | 52.88 | 10.54 | | | | | | |
| | Additional 2-wire ISDN Loop in same DS1Interoffice Transport Combination - Zone 2 | | 2 | UNCNX | U1L2X | 32.85 | 117.24 | 79.77 | 52.88 | 10.54 | | | | | | |
| | Additional 2-wire ISDN Loop in same DS1Interoffice Transport Combination - Zone 3 | | 3 | UNCNX | U1L2X | 48.55 | 117.24 | 79.77 | 52.88 | 10.54 | | | | | | |
| | Additional 2-wire ISDN COCI (BRITE) - in combination- per month | | | UNCNX | UC1CA | 2.41 | 6.58 | 4.72 | | | | | | | | |
| | Wholesale to UNE, Switch-As-Is Charge | | | UNC1X | UNCCC | | 5.59 | 5.59 | 6.98 | 6.98 | | | | | | |
| | **EXTENDED 4-WIRE DS1 DIGITAL EXTENDED LOOP WITH DEDICATED STS-1 INTEROFFICE TRANSPORT** | | | | | | | | | | | | | | | |
| | First DS1 Loop Combination - Zone 1 | | 1 | UNC1X | USLXX | 82.55 | 252.47 | 157.54 | 44.70 | 11.71 | | | | | | |
| | First DS1 Loop Combination - Zone 2 | | 2 | UNC1X | USLXX | 154.18 | 252.47 | 157.54 | 44.70 | 11.71 | | | | | | |
| | First DS1 Loop Combination - Zone 3 | | 3 | UNC1X | USLXX | 314.52 | 252.47 | 157.54 | 44.70 | 11.71 | | | | | | |
| | Interoffice Transport - Dedicated - STS-1 combination - Per Mile Per Month | | | UNCSX | 1L5XX | 4.09 | | | | | | | | | | |
| | Interoffice Transport - Dedicated - STS-1 combination - Facility Termination per month | | | UNCSX | U1TFS | 701.37 | 278.75 | 162.76 | 60.20 | 58.46 | | | | | | |
| | 3/1 Channel System in combination per month | | | UNCSX | MQ3 | 166.13 | 178.14 | 93.97 | 33.26 | 31.83 | | | | | | |
| | DS1 COCI in combination per month | | | UNC1X | UC1D1 | 12.70 | 6.58 | 4.72 | | | | | | | | |
| | Additional DS1Loop in the same STS-1 Interoffice Transport Combination - Zone 1 | | 1 | UNC1X | USLXX | 82.55 | 252.47 | 157.54 | 44.70 | 11.71 | | | | | | |
| | Additional DS1Loop in the same STS-1 Interoffice Transport Combination - Zone 2 | | 2 | UNC1X | USLXX | 154.18 | 252.47 | 157.54 | 44.70 | 11.71 | | | | | | |
| | Additional DS1Loop in the same STS-1 Interoffice Transport Combination - Zone 3 | | 3 | UNC1X | USLXX | 314.52 | 252.47 | 157.54 | 44.70 | 11.71 | | | | | | |
| | DS1 COCI in combination per month | | | UNC1X | UC1D1 | 12.70 | 6.58 | 4.72 | | | | | | | | |
| | Wholesale to UNE, Switch-As-Is Charge | | | UNCSX | UNCCC | | 5.59 | 5.59 | 6.98 | 6.98 | | | | | | |
| | **EXTENDED 4-WIRE 56 KBPS DIGITAL EXTENDED LOOP WITH 56 KBPS INTEROFFICE TRANSPORT** | | | | | | | | | | | | | | | |
| | 4-wire 56 kbps Local Loop in combination - Zone 1 | | 1 | UNCDX | UDL56 | 26.09 | 126.27 | 88.80 | 59.14 | 14.50 | | | | | | |
| | 4-wire 56 kbps Local Loop in combination - Zone 2 | | 2 | UNCDX | UDL56 | 35.95 | 126.27 | 88.80 | 59.14 | 14.50 | | | | | | |
| | 4-wire 56 kbps Local Loop in combination - Zone 3 | | 3 | UNCDX | UDL56 | 37.88 | 126.27 | 88.80 | 59.14 | 14.50 | | | | | | |

| CATEGORY | RATE ELEMENTS | Interim | Zone | BCS | USOC | RATES($) | | | | | Svc Order Submitted Elec per LSR | Svc Order Submitted Manually per LSR | Incremental Charge - Manual Svc Order vs. Electronic-1st | Incremental Charge - Manual Svc Order vs. Electronic-Add'l | Incremental Charge - Manual Svc Order vs. Electronic-Disc 1st | Incremental Charge - Manual Svc Order vs. Electronic-Disc Add'l |
|---|---|---|---|---|---|---|---|---|---|---|---|---|---|---|---|---|
| | | | | | | Rec | Nonrecurring | | Nonrecurring Disconnect | | OSS Rates($) | | | | | |
| | | | | | | | First | Add'l | First | Add'l | SOMEC | SOMAN | SOMAN | SOMAN | SOMAN | SOMAN |
| | Interoffice Transport - Dedicated - 4-wire 56 kbps combination - Per Mile per month | | | UNCDX | 1L5XX | 0.008838 | | | | | | | | | | |
| | Interoffice Transport - Dedicated - 4-wire 56 kbps combination - Facility Termination per month | | | UNCDX | U1TD5 | 15.12 | 40.54 | 27.41 | 16.74 | 6.90 | | | | | | |
| | Wholesale to UNE, Switch-As-Is Charge | | | UNCDX | UNCCC | | 5.59 | 5.59 | 6.98 | 6.98 | | | | | | |
| | **EXTENDED 4-WIRE 64 KBPS DIGITAL EXTENDED LOOP WITH 64 KBPS INTEROFFICE TRANSPORT** | | | | | | | | | | | | | | | |
| | 4-wire 64 kbps Lcoal Loop in Combination - Zone 1 | | 1 | UNCDX | UDL64 | 26.09 | 126.27 | 88.80 | 59.14 | 14.50 | | | | | | |
| | 4-wire 64 kbps Lcoal Loop in Combination - Zone 2 | | 2 | UNCDX | UDL64 | 35.95 | 126.27 | 88.80 | 59.14 | 14.50 | | | | | | |
| | 4-wire 64 kbps Lcoal Loop in Combination - Zone 3 | | 3 | UNCDX | UDL64 | 37.88 | 126.27 | 88.80 | 59.14 | 14.50 | | | | | | |
| | Interoffice Transport - Dedicated - 4-wire 64 kbps combination - Per Mile per month | | | UNCDX | 1L5XX | 0.008838 | | | | | | | | | | |
| | Interoffice Transport - Dedicated - 4-wire 64 kbps combination - Facility Termination per month | | | UNCDX | U1TD6 | 15.12 | 40.54 | 27.41 | 16.74 | 6.90 | | | | | | |
| | Wholesale to UNE, Switch-As-Is Charge | | | UNCDX | UNCCC | | 5.59 | 5.59 | 6.98 | 6.98 | | | | | | |
| | **EXTENDED 2-WIRE VOICE GRADE LOOP WITH DS1 INTEROFFICE TRANSPORT w/ 3/1 MUX** | | | | | | | | | | | | | | | |
| | First 2-wire VG Loop (SL2) in Combination - Zone 1 | | 1 | UNCVX | UEAL2 | 14.38 | 88.00 | 55.00 | 47.24 | 7.44 | | | | | | |
| | First 2-wire VG Loop (SL2) in Combination - Zone 2 | | 2 | UNCVX | UEAL2 | 22.85 | 88.00 | 55.00 | 47.24 | 7.44 | | | | | | |
| | First 2-wire VG Loop (SL2) in Combination - Zone 3 | | 3 | UNCVX | UEAL2 | 36.14 | 88.00 | 55.00 | 47.24 | 7.44 | | | | | | |
| | First Interoffice Transport - Dedicated - DS1 combination - Per Mile | | | UNC1X | 1L5XX | 0.18 | | | | | | | | | | |
| | First Interoffice Transport - Dedicated - DS1 combination - Facility Termination per month | | | UNC1X | U1TF1 | 60.16 | 89.27 | 81.81 | 16.35 | 14.44 | | | | | | |
| | Per each DS1 Channelization System Per Month | | | UNC1X | MQ1 | 101.06 | 91.04 | 62.57 | 10.54 | 9.79 | | | | | | |
| | Per each Voice Grade COCI - Per Month per month | | | UNCVX | 1D1VG | 0.53 | 6.58 | 4.72 | | | | | | | | |
| | 3/1 Channel System in combination per month | | | UNC3X | MQ3 | 166.13 | 178.14 | 93.97 | 33.26 | 31.83 | | | | | | |
| | Per each DS1 COCI in combination per month | | | UNC1X | UC1D1 | 12.70 | 6.58 | 4.72 | | | | | | | | |
| | Each Additional 2-Wire VG Loop(SL 2) in the same DS1 Interoffice Transport Combination - Zone 1 | | 1 | UNCVX | UEAL2 | 14.38 | 88.00 | 55.00 | 47.24 | 7.44 | | | | | | |
| | Each Additional 2-Wire VG Loop(SL2) in the same DS1 Interoffice Transport Combination - Zone 2 | | 2 | UNCVX | UEAL2 | 22.85 | 88.00 | 55.00 | 47.24 | 7.44 | | | | | | |
| | Each Additional 2-Wire VG Loop(SL2) in the same DS1 Interoffice Transport Combination - Zone 3 | | 3 | UNCVX | UEAL2 | 36.14 | 88.00 | 55.00 | 47.24 | 7.44 | | | | | | |
| | Each Additional Voice Grade COCI - in combination - per month | | | UNCVX | 1D1VG | 0.53 | 6.58 | 4.72 | | | | | | | | |
| | Each Additional DS1 Interoffice Channel per mile in same 3/1 Channel System per month | | | UNC1X | 1L5XX | 0.18 | | | | | | | | | | |
| | Each Additional DS1 Interoffice Channel Facility Termination in same 3/1 Channel System per month | | | UNC1X | U1TF1 | 60.16 | 89.27 | 81.81 | 16.35 | 14.44 | | | | | | |
| | Each Additional DS1 COCI combination per month | | | UNC1X | UC1D1 | 12.70 | 6.58 | 4.72 | | | | | | | | |
| | Wholesale to UNE, Switch-As-Is Charge | | | UNC1X | UNCCC | | 5.59 | 5.59 | 6.98 | 6.98 | | | | | | |
| | **EXTENDED 4-WIRE VOICE GRADE LOOP WITH DEDICATED DS1 INTEROFFICE TRANSPORT w/ 3/1 MUX** | | | | | | | | | | | | | | | |
| | First 4-Wire Analog Voice Grade Local Loop in Combination - Zone 1 | | 1 | UNCVX | UEAL4 | 25.34 | 131.97 | 94.51 | 59.14 | 14.50 | | | | | | |
| | First 4-Wire Analog Voice Grade Local Loop in Combination - Zone 2 | | 2 | UNCVX | UEAL4 | 38.58 | 131.97 | 94.51 | 59.14 | 14.50 | | | | | | |
| | First 4-Wire Analog Voice Grade Local Loop in Combination - Zone 3 | | 3 | UNCVX | UEAL4 | 60.02 | 131.97 | 94.51 | 59.14 | 14.50 | | | | | | |
| | First Interoffice Transport - Dedicated - DS1 combination - Per Mile Per Month | | | UNC1X | 1L5XX | 0.18 | | | | | | | | | | |
| | First Interoffice Transport - Dedicated - DS1 - Facility Termination Per Month | | | UNC1X | U1TF1 | 60.16 | 89.27 | 81.81 | 16.35 | 14.44 | | | | | | |
| | Per each 1/0 Channel System in combination Per Month | | | UNC1X | MQ1 | 101.06 | 91.04 | 62.57 | 10.54 | 9.79 | | | | | | |
| | Per each Voice Grade COCI in combination - per month | | | UNCVX | 1D1VG | 0.53 | 6.58 | 4.72 | | | | | | | | |
| | 3/1 Channel System in combination per month | | | UNC3X | MQ3 | 166.13 | 178.14 | 93.97 | 33.26 | 31.83 | | | | | | |
| | Per each DS1 COCI in combination per month | | | UNC1X | UC1D1 | 12.70 | 6.58 | 4.72 | | | | | | | | |
| | Additional 4-Wire Analog Voice Grade Loop in same DS1 Interoffice Transport Combination - Zone 1 | | 1 | UNCVX | UEAL4 | 25.34 | 131.97 | 94.51 | 59.14 | 14.50 | | | | | | |
| | Additional 4-Wire Analog Voice Grade Loop in same DS1 Interoffice Transport Combination - Zone 2 | | 2 | UNCVX | UEAL4 | 38.58 | 131.97 | 94.51 | 59.14 | 14.50 | | | | | | |

| CATEGORY | | RATE ELEMENTS | Interim | Zone | BCS | USOC | RATES($) | | | | | Svc Order Submitted Elec per LSR | Svc Order Submitted Manually per LSR | Incremental Charge - Manual Svc Order vs. Electronic-1st | Incremental Charge - Manual Svc Order vs. Electronic-Add'l | Incremental Charge - Manual Svc Order vs. Electronic-Disc 1st | Incremental Charge - Manual Svc Order vs. Electronic-Disc Add'l |
|---|---|---|---|---|---|---|---|---|---|---|---|---|---|---|---|---|---|
| | | | | | | | Rec | Nonrecurring | | Nonrecurring Disconnect | | OSS Rates($) | | | | | |
| | | | | | | | | First | Add'l | First | Add'l | SOMEC | SOMAN | SOMAN | SOMAN | SOMAN | SOMAN |
| | | Additional 4-Wire Analog Voice Grade Loop in same DS1 Interoffice Transport Combination - Zone 3 | | 3 | UNCVX | UEAL4 | 60.02 | 131.97 | 94.51 | 59.14 | 14.50 | | | | | | |
| | | Each Additional DS1 Interoffice Channel per mile in same 3/1 Channel System per month | | | UNC1X | 1L5XX | 0.18 | | | | | | | | | | |
| | | Each Additional DS1 Interoffice Channel Facility Termination in same 3/1 Channel System per month | | | UNC1X | U1TF1 | 60.16 | 89.27 | 81.81 | 16.35 | 14.44 | | | | | | |
| | | Additional Voice Grade COCI - in combination - per month | | | UNCVX | 1D1VG | 0.53 | 6.58 | 4.72 | | | | | | | | |
| | | Wholesale to UNE, Switch-As-Is Charge | | | UNC1X | UNCCC | | 5.59 | 5.59 | 6.98 | 6.98 | | | | | | |
| | **EXTENDED 4-WIRE 56 KBPS DIGITAL LOOP WITH DEDICATED DS1 INTEROFFICE TRANSPORT w/ 3/1 MUX** | | | | | | | | | | | | | | | | |
| | | First 4-Wire 56Kbps Digital Grade Local Loop in Combination - Zone 1 | | 1 | UNCDX | UDL56 | 26.09 | 126.27 | 88.80 | 59.14 | 14.50 | | | | | | |
| | | First 4-Wire 56Kbps Digital Grade Local Loop in Combination - Zone 2 | | 2 | UNCDX | UDL56 | 35.95 | 126.27 | 88.80 | 59.14 | 14.50 | | | | | | |
| | | First 4-Wire 56Kbps Digital Grade Local Loop in Combination - Zone 3 | | 3 | UNCDX | UDL56 | 37.88 | 126.27 | 88.80 | 59.14 | 14.50 | | | | | | |
| | | First Interoffice Transport - Dedicated - DS1 combination - Per Mile Per Month | | | UNC1X | 1L5XX | 0.18 | | | | | | | | | | |
| | | First Interoffice Transport - Dedicated - DS1 - combination Facility Termination Per Month | | | UNC1X | U1TF1 | 60.16 | 89.27 | 81.81 | 16.35 | 14.44 | | | | | | |
| | | Per each 1/0 Channel System in combination Per Month | | | UNC1X | MQ1 | 101.06 | 91.04 | 62.57 | 10.54 | 9.79 | | | | | | |
| | | Per each OCU-DP COCI (data) COCI per month (2.4-64kbs) | | | UNCDX | 1D1DD | 1.12 | 6.58 | 4.72 | | | | | | | | |
| | | 3/1 Channel System in combination per month | | | UNC3X | MQ3 | 166.13 | 178.14 | 93.97 | 33.26 | 31.83 | | | | | | |
| | | Per each DS1 COCI in combination per month | | | UNC1X | UC1D1 | 12.70 | 6.58 | 4.72 | | | | | | | | |
| | | Additional 4-Wire 56Kbps Digital Grade Loop in same DS1 Interoffice Transport Combination - Zone 1 | | 1 | UNCDX | UDL56 | 26.09 | 126.27 | 88.80 | 59.14 | 14.50 | | | | | | |
| | | Additional 4-Wire 56Kbps Digital Grade Loop in same DS1 Interoffice Transport Combination - Zone 2 | | 2 | UNCDX | UDL56 | 35.95 | 126.27 | 88.80 | 59.14 | 14.50 | | | | | | |
| | | Additional 4-Wire 56Kbps Digital Grade Loop in same DS1 Interoffice Transport Combination - Zone 3 | | 3 | UNCDX | UDL56 | 37.88 | 126.27 | 88.80 | 59.14 | 14.50 | | | | | | |
| | | OCU-DP COCI (data) COCI in combination per month (2.4-64kbs) | | | UNCDX | 1D1DD | 1.12 | 6.58 | 4.72 | | | | | | | | |
| | | Each Additional DS1 Interoffice Channel per mile in same 3/1 Channel System per month | | | UNC1X | 1L5XX | 0.18 | | | | | | | | | | |
| | | Each Additional DS1 Interoffice Channel Facility Termination in same 3/1 Channel System per month | | | UNC1X | U1TF1 | 60.16 | 89.27 | 81.81 | 16.35 | 14.44 | | | | | | |
| | | Each Additional DS1 COCI in the same 3/1 channel system combination per month | | | UNC1X | UC1D1 | 12.70 | 6.58 | 4.72 | | | | | | | | |
| | | Wholesale to UNE, Switch-As-Is Charge | | | UNC1X | UNCCC | | 5.59 | 5.59 | 6.98 | 6.98 | | | | | | |
| | **EXTENDED 4-WIRE 64 KBPS DIGITAL LOOP WITH DEDICATED DS1 INTEROFFICE TRANSPORT w/ 3/1 MUX** | | | | | | | | | | | | | | | | |
| | | First 4-Wire 64Kbps Digital Grade Loop in a DS1 Interoffice Transport Combination - Zone 1 | | 1 | UNCDX | UDL64 | 26.09 | 126.27 | 88.80 | 59.14 | 14.50 | | | | | | |
| | | First 4-Wire 64Kbps Digital Grade Loop in a DS1 Interoffice Transport Combination - Zone 2 | | 2 | UNCDX | UDL64 | 35.95 | 126.27 | 88.80 | 59.14 | 14.50 | | | | | | |
| | | First 4-Wire 64Kbps Digital Grade Loop in a DS1 Interoffice Transport Combination - Zone 3 | | 3 | UNCDX | UDL64 | 37.88 | 126.27 | 88.80 | 59.14 | 14.50 | | | | | | |
| | | First Interoffice Transport - Dedicated - DS1 combination - Per Mile Per Month | | | UNC1X | 1L5XX | 0.18 | | | | | | | | | | |
| | | First Interoffice Transport - Dedicated - DS1 combination - Facility Termination Per Month | | | UNC1X | U1TF1 | 60.16 | 89.27 | 81.81 | 16.35 | 14.44 | | | | | | |
| | | Per each Channel System 1/0 in combination Per Month | | | UNC1X | MQ1 | 101.06 | 91.04 | 62.57 | 10.54 | 9.79 | | | | | | |
| | | Per each OCU-DP COCI (data) in combination - per month (2.4-64kbs) | | | UNCDX | 1D1DD | 1.12 | 6.58 | 4.72 | | | | | | | | |
| | | 3/1 Channel System in combination per month | | | UNC3X | MQ3 | 166.13 | 178.14 | 93.97 | 33.26 | 31.83 | | | | | | |
| | | Per each DS1 COCI in combination per month | | | UNC1X | UC1D1 | 12.70 | 6.58 | 4.72 | | | | | | | | |
| | | Additional 4-Wire 64Kbps Digital Grade Loop in same DS1 Interoffice Transport Combination - Zone 1 | | 1 | UNCDX | UDL64 | 26.09 | 126.27 | 88.80 | 59.14 | 14.50 | | | | | | |
| | | Additional 4-Wire 64Kbps Digital Grade Loop in same DS1 Interoffice Transport Combination - Zone 2 | | 2 | UNCDX | UDL64 | 35.95 | 126.27 | 88.80 | 59.14 | 14.50 | | | | | | |

| CATEGORY | | RATE ELEMENTS | Interim | Zone | BCS | USOC | RATES($) | | | | | Svc Order Submitted Elec per LSR | Svc Order Submitted Manually per LSR | Incremental Charge - Manual Svc Order vs. Electronic-1st | Incremental Charge - Manual Svc Order vs. Electronic-Add'l | Incremental Charge - Manual Svc Order vs. Electronic-Disc 1st | Incremental Charge - Manual Svc Order vs. Electronic-Disc Add'l |
|---|---|---|---|---|---|---|---|---|---|---|---|---|---|---|---|---|---|
| | | | | | | | Rec | Nonrecurring | | Nonrecurring Disconnect | | OSS Rates($) | | | | | |
| | | | | | | | | First | Add'l | First | Add'l | SOMEC | SOMAN | SOMAN | SOMAN | SOMAN | SOMAN |
| | | Additional 4-Wire 64Kbps Digital Grade Loop in same DS1 Interoffice Transport Combination - Zone 3 | | 3 | UNCDX | UDL64 | 37.88 | 126.27 | 88.80 | 59.14 | 14.50 | | | | | | |
| | | Additional OCU-DP COCI (data) - DS1 to DS0 Channel System combination - per month (2.4-64kbs) | | | UNCDX | 1D1DD | 1.12 | 6.58 | 4.72 | | | | | | | | |
| | | Each Additional DS1 Interoffice Channel per mile in same 3/1 Channel System per month | | | UNC1X | 1L5XX | 0.18 | | | | | | | | | | |
| | | Each Additional DS1 Interoffice Channel Facility Termination in same 3/1 Channel System per month | | | UNC1X | U1TF1 | 60.16 | 89.27 | 81.81 | 16.35 | 14.44 | | | | | | |
| | | Each Additional DS1 COCI in the same 3/1 channel system combination per month | | | UNC1X | UC1D1 | 12.70 | 6.58 | 4.72 | | | | | | | | |
| | | Wholesale to UNE, Switch-As-Is Charge | | | UNC1X | UNCCC | | 5.59 | 5.59 | 6.98 | 6.98 | | | | | | |
| | **EXTENDED 2-WIRE ISDN LOOP WITH DS1 INTEROFFICE TRANSPORT w/ 3/1 MUX** | | | | | | | | | | | | | | | | |
| | | First 2-Wire ISDN Loop in a DS1 Interoffice Combination Transport - Zone 1 | | 1 | UNCNX | U1L2X | 21.88 | 117.24 | 79.77 | 52.88 | 10.54 | | | | | | |
| | | First 2-Wire ISDN Loop in a DS1 Interoffice Combination Transport - Zone 2 | | 2 | UNCNX | U1L2X | 32.85 | 117.24 | 79.77 | 52.88 | 10.54 | | | | | | |
| | | First 2-Wire ISDN Loop in a DS1 Interoffice Combination Transport - Zone 3 | | 3 | UNCNX | U1L2X | 48.55 | 117.24 | 79.77 | 52.88 | 10.54 | | | | | | |
| | | First Interoffice Transport - Dedicated - DS1 combination - Per Mile per month | | | UNC1X | 1L5XX | 0.18 | | | | | | | | | | |
| | | First Interoffice Transport - Dedicated - DS1 combination - Facility Termination per month | | | UNC1X | U1TF1 | 60.16 | 89.27 | 81.81 | 16.35 | 14.44 | | | | | | |
| | | Per each Channel System 1/0 in combination - per month | | | UNC1X | MQ1 | 101.06 | 91.04 | 62.57 | 10.54 | 9.79 | | | | | | |
| | | Per each 2-wire ISDN COCI (BRITE) in combination - per month | | | UNCNX | UC1CA | 2.41 | 6.58 | 4.72 | | | | | | | | |
| | | 3/1 Channel System in combination per month | | | UNC3X | MQ3 | 166.13 | 178.14 | 93.97 | 33.26 | 31.83 | | | | | | |
| | | Per each DS1 COCI in combination per month | | | UNC1X | UC1D1 | 12.70 | 6.58 | 4.72 | | | | | | | | |
| | | Additional 2-wire ISDN Loop in same DS1Interoffice Transport Combination - Zone 1 | | 1 | UNCNX | U1L2X | 21.88 | 117.24 | 79.77 | 52.88 | 10.54 | | | | | | |
| | | Additional 2-wire ISDN Loop in same DS1Interoffice Transport Combination - Zone 2 | | 2 | UNCNX | U1L2X | 32.85 | 117.24 | 79.77 | 52.88 | 10.54 | | | | | | |
| | | Additional 2-wire ISDN Loop in same DS1Interoffice Transport Combination - Zone 3 | | 3 | UNCNX | U1L2X | 48.55 | 117.24 | 79.77 | 52.88 | 10.54 | | | | | | |
| | | Additional 2-wire ISDN COCI (BRITE) in same 1/0 channel system combination- per month | | | UNCNX | UC1CA | 2.41 | 6.58 | 4.72 | | | | | | | | |
| | | Each Additional DS1 Interoffice Channel per mile in same 3/1 Channel System per month | | | UNC1X | 1L5XX | 0.18 | | | | | | | | | | |
| | | Each Additional DS1 Interoffice Channel Facility Termination in same 3/1 Channel System per month | | | UNC1X | U1TF1 | 60.16 | 89.27 | 81.81 | 16.35 | 14.44 | | | | | | |
| | | Each Additional DS1 COCI in the same 3/1 channel system combination per month | | | UNC1X | UC1D1 | 12.70 | 6.58 | 4.72 | | | | | | | | |
| | | Wholesale to UNE, Switch-As-Is Charge | | | UNC1X | UNCCC | | 5.59 | 5.59 | 6.98 | 6.98 | | | | | | |
| | **EXTENDED 4-WIRE DS1 LOOP WITH DEDICATED DS1 INTEROFFICE TRANSPORT w/ 3/1 MUX** | | | | | | | | | | | | | | | | |
| | | First 4-wire DS1 Digital Lcoal Loop in Combination - Zone 1 | | 1 | UNC1X | USLXX | 82.55 | 252.47 | 157.54 | 44.70 | 11.71 | | | | | | |
| | | First 4-wire DS1 Digital Lcoal Loop in Combination - Zone 2 | | 2 | UNC1X | USLXX | 154.18 | 252.47 | 157.54 | 44.70 | 11.71 | | | | | | |
| | | First 4-wire DS1 Digital Lcoal Loop in Combination - Zone 3 | | 3 | UNC1X | USLXX | 314.52 | 252.47 | 157.54 | 44.70 | 11.71 | | | | | | |
| | | First Interoffice Transport - Dedicated - DS1 combination - Per Mile Per Month | | | UNC1X | 1L5XX | 0.18 | | | | | | | | | | |
| | | First Interoffice Transport - Dedicated - DS1 combination - Facility Termination Per Month | | | UNC1X | U1TF1 | 60.16 | 89.27 | 81.81 | 16.35 | 14.44 | | | | | | |
| | | 3/1 Channel System in combination per month | | | UNC3X | MQ3 | 166.13 | 178.14 | 93.97 | 33.26 | 31.83 | | | | | | |
| | | Per each DS1 COCI combination per month | | | UNC1X | UC1D1 | 12.70 | 6.58 | 4.72 | | | | | | | | |
| | | Each Additional DS1 Interoffice Channel per mile in same 3/1 Channel System per month | | | UNC1X | 1L5XX | 0.18 | | | | | | | | | | |
| | | Each Additional DS1 Interoffice Channel Facility Termination in same 3/1 Channel System per month | | | UNC1X | U1TF1 | 60.16 | 89.27 | 81.81 | 16.35 | 14.44 | | | | | | |
| | | Each Additional DS1 COCI in the same 3/1 channel system combination per month | | | UNC1X | UC1D1 | 12.70 | 6.58 | 4.72 | | | | | | | | |

| CATEGORY | RATE ELEMENTS | Interim | Zone | BCS | USOC | RATES($) | | | | | Svc Order Submitted Elec per LSR | Svc Order Submitted Manually per LSR | Incremental Charge - Manual Svc Order vs. Electronic-1st | Incremental Charge - Manual Svc Order vs. Electronic-Add'l | Incremental Charge - Manual Svc Order vs. Electronic-Disc 1st | Incremental Charge - Manual Svc Order vs. Electronic-Disc Add'l |
|---|---|---|---|---|---|---|---|---|---|---|---|---|---|---|---|---|
| | | | | | | Rec | Nonrecurring | | Nonrecurring Disconnect | | OSS Rates($) | | | | | |
| | | | | | | | First | Add'l | First | Add'l | SOMEC | SOMAN | SOMAN | SOMAN | SOMAN | SOMAN |
| | Additional 4-Wire DS1 Digital Local Loop in Combination - Zone 1 | | 1 | UNC1X | USLXX | 82.55 | 252.47 | 157.54 | 44.70 | 11.71 | | | | | | |
| | Additional 4-Wire DS1 Digital Local Loop in Combination - Zone 2 | | 2 | UNC1X | USLXX | 154.18 | 252.47 | 157.54 | 44.70 | 11.71 | | | | | | |
| | Additional 4-Wire DS1 Digital Local Loop in Combination - Zone 3 | | 3 | UNC1X | USLXX | 314.52 | 252.47 | 157.54 | 44.70 | 11.71 | | | | | | |
| | Wholesale to UNE, Switch-As-Is Charge | | | UNC1X | UNCCC | | 5.59 | 5.59 | 6.98 | 6.98 | | | | | | |
| | **EXTENDED 4-WIRE 56 KBPS DIGITAL EXTENDED LOOP WITH DS0 INTEROFFICE TRANSPORT** | | | | | | | | | | | | | | | |
| | First 4-wire 56 kbps Local Loop in combination - Zone 1 | | 1 | UNCDX | UDL56 | 26.09 | 126.27 | 88.80 | 59.14 | 14.50 | | | | | | |
| | First 4-wire 56 kbps Local Loop in combination - Zone 2 | | 2 | UNCDX | UDL56 | 35.95 | 126.27 | 88.80 | 59.14 | 14.50 | | | | | | |
| | First 4-wire 56 kbps Local Loop in combination - Zone 3 | | 3 | UNCDX | UDL56 | 37.88 | 126.27 | 88.80 | 59.14 | 14.50 | | | | | | |
| | First 4-wiree 56 kbps Interoffice Transport - Dedicated - Per Mile per month | | | UNCDX | 1L5XX | 0.008838 | | | | | | | | | | |
| | First 4-wire 56 kbps Interoffice Transport - Dedicated - Facility Termination per month | | | UNCDX | U1TD5 | 15.12 | 40.54 | 27.41 | 16.74 | 6.90 | | | | | | |
| | Wholesale to UNE, Switch-As-Is Charge | | | UNCDX | UNCCC | | 5.59 | 5.59 | 6.98 | 6.98 | | | | | | |
| | **EXTENDED 4-WIRE 64 KBPS DIGITAL EXTENDED LOOP WITH DS0 INTEROFFICE TRANSPORT** | | | | | | | | | | | | | | | |
| | First 4-wire 64 kbps Local Loop in combination - Zone 1 | | 1 | UNCDX | UDL64 | 26.09 | 126.27 | 88.80 | 59.14 | 14.50 | | | | | | |
| | First 4-wire 64 kbps Local Loop in combination - Zone 2 | | 2 | UNCDX | UDL64 | 35.95 | 126.27 | 88.80 | 59.14 | 14.50 | | | | | | |
| | First 4-wire 64 kbps Local Loop in combination - Zone 3 | | 3 | UNCDX | UDL64 | 37.88 | 126.27 | 88.80 | 59.14 | 14.50 | | | | | | |
| | First l4-wire 65 kbps Interoffice Transport - Dedicated - Per Mile per month | | | UNCDX | 1L5XX | 0.008838 | | | | | | | | | | |
| | First 4-wire 64 kbps Interoffice Transport - Dedicated - Facility Termination per month | | | UNCDX | U1TD6 | 15.12 | 40.54 | 27.41 | 16.74 | 6.90 | | | | | | |
| | Wholesale to UNE, Switch-As-Is Charge | | | UNCDX | UNCCC | | 5.59 | 5.59 | 6.98 | 6.98 | | | | | | |
| **ADDITIONAL NETWORK ELEMENTS** | | | | | | | | | | | | | | | | |
| | **When used as a part of a currently combined facility, the non-recurrng charges do not apply, but a Switch As Is charge does apply.** | | | | | | | | | | | | | | | |
| | **When used as ordinarily combined network elements in All States, the non-recurring charges apply and the Switch As Is Charge does not.** | | | | | | | | | | | | | | | |
| | **Nonrecurring Currently Combined Network Elements "Switch As Is" Charge** | | | | | | | | | | | | | | | |
| | Wholesale to UNE, Switch-As-Is Conversion Charge, 2/4-wire VG | | | UNCVX | UNCCC | | 5.59 | 5.59 | 6.98 | 6.98 | | | | | | |
| | Wholesale to UNE, Switch-As-Is Conversion Charge, 4-wire VG | | | UNCDX | UNCCC | | 5.59 | 5.59 | 6.98 | 6.98 | | | | | | |
| | Wholesale to UNE, Switch-As-Is Conversion Charge, DS1 | | | UNC1X | UNCCC | | 5.59 | 5.59 | 6.98 | 6.98 | | | | | | |
| | Wholesale to UNE, Switch-As-Is Conversion Charge, DS3 | | | UNC3X | UNCCC | | 5.59 | 5.59 | 6.98 | 6.98 | | | | | | |
| | Wholesale to UNE, Switch-As-Is Conversion Charge, STS-1 | | | UNCSX | UNCCC | | 5.59 | 5.59 | 6.98 | 6.98 | | | | | | |
| | **Optional Features & Functions:** | | | | | | | | | | | | | | | |
| | Clear Channel Capability Extended Frame Option - per DS1 | I | | U1TD1, ULDD1,UNC1X | CCOEF | | 0.00 | 0.00 | 0.00 | 0.00 | | | | | | |
| | Clear Channel Capability Super FrameOption - per DS1 | I | | U1TD1, ULDD1,UNC1X | CCOSF | | 0.00 | 0.00 | 0.00 | 0.00 | | | | | | |
| | Clear Channel Capability (SF/ESF) Option - Subsequent Activity - per DS1 | I | | ULDD1, U1TD1, UNC1X, USL | NRCCC | | 184.85 | 23.81 | 1.99 | 0.7741 | | | | | | |
| | C-bit Parity Option - Subsequent Activity - per DS3 | i | | U1TD3, ULDD3, UE3, UNC3X | NRCC3 | | 219.13 | 7.67 | 0.7355 | 0.00 | | | | | | |
| | **MULTIPLEXER Interfaces** | | | | | | | | | | | | | | | |
| | DS1 to DS0 Channel System per month | | | UNC1X | MQ1 | 101.06 | 91.04 | 62.57 | 10.54 | 9.79 | | | | | | |
| | Wholesale to UNE, Switch-As-Is Conversion Charge, 1/0 Channel System | | | UNC1X | UNCCC | | 5.59 | 5.59 | 6.98 | 6.98 | | | | | | |
| | OCU-DP COCI (data) - DS1 to DS0 Channel System - per month (2.4-64kbs) used for a Local Loop | | | UDL | 1D1DD | 1.12 | 6.58 | 4.72 | 0.00 | 0.00 | | | | | | |
| | OCU-DP COCI (data) - DS1 to DS0 Channel System - per month (2.4-64kbs) used for connection to a channelized DS1 Local Channel in the same SWC as collocation | | | U1TUD | 1D1DD | 1.12 | 6.58 | 4.72 | 0.00 | 0.00 | | | | | | |
| | 2-wire ISDN COCI (BRITE) - DS1 to DS0 Channel System - per month for a Local Loop | | | UDN | UC1CA | 2.41 | 6.58 | 4.72 | 0.00 | 0.00 | | | | | | |
| | 2-wire ISDN COCI (BRITE) - DS1 to DS0 Channel System - per month used for connection to a channelized DS1 Local Channel in the same SWC as collocation | | | U1TUB | UC1CA | 2.41 | 6.58 | 4.72 | 0.00 | 0.00 | | | | | | |

## UNBUNDLED NETWORK ELEMENTS - Alabama

Attachment: 2 Exh. A

| CATEGORY | RATE ELEMENTS | Interim | Zone | BCS | USOC | RATES($) | | | | | Svc Order Submitted Elec per LSR | Svc Order Submitted Manually per LSR | Incremental Charge - Manual Svc Order vs. Electronic-1st | Incremental Charge - Manual Svc Order vs. Electronic-Add'l | Incremental Charge - Manual Svc Order vs. Electronic-Disc 1st | Incremental Charge - Manual Svc Order vs. Electronic-Disc Add'l |
|---|---|---|---|---|---|---|---|---|---|---|---|---|---|---|---|---|
| | | | | | | Rec | Nonrecurring | | Nonrecurring Disconnect | | OSS Rates($) | | | | | |
| | | | | | | | First | Add'l | First | Add'l | SOMEC | SOMAN | SOMAN | SOMAN | SOMAN | SOMAN |
| | Voice Grade COCI - DS1 to DS0 Channel System - per month used for a Local Loop | | | UEA | 1D1VG | 0.53 | 6.58 | 4.72 | 0.00 | 0.00 | | | | | | |
| | Voice Grade COCI - DS1 to DS0 Channel System - per month used for connection to a channelized DS1 Local Channel in the same SWC as collocation | | | U1TUC | 1D1VG | 0.53 | 6.58 | 4.72 | 0.00 | 0.00 | | | | | | |
| | DS3 to DS1 Channel System per month | | | UNC3X | MQ3 | 166.13 | 178.14 | 93.97 | 33.26 | 31.83 | | | | | | |
| | Wholesale to UNE, Switch-As-Is Conversion Charge, 3/1 Channel System | | | UNC3X | UNCCC | | 5.59 | 5.59 | 6.98 | 6.98 | | | | | | |
| | STS-1 to DS1 Channel System per month | | | UNCSX | MQ3 | 166.13 | 178.14 | 93.97 | 33.26 | 31.83 | | | | | | |
| | Wholesale to UNE, Switch-As-Is Conversion Charge, 3/1 Channel System | | | UNCSX | UNCCC | | 5.59 | 5.59 | 6.98 | 6.98 | | | | | | |
| | DS1 COCI used with Loop per month | | | USL | UC1D1 | 12.70 | 6.58 | 4.72 | 0.00 | 0.00 | | | | | | |
| | DS1 COCI (used for connection to a channelized DS1 Local Channel in the same SWC as collocation) per month | | | U1TUA | UC1D1 | 12.70 | 6.58 | 4.72 | 0.00 | 0.00 | | | | | | |
| | DS1 COCI used with Interoffice Channel per month | | | U1TD1 | UC1D1 | 12.70 | 6.58 | 4.72 | 0.00 | 0.00 | | | | | | |
| | DS3 Interface Unit (DS1 COCI) used with Local Channel per month | | | ULDD1 | UC1D1 | 12.70 | 6.58 | 4.72 | 0.00 | 0.00 | | | | | | |
| **Access to DCS - Customer Reconfiguration (FlexServ)** | | | | | | | | | | | | | | | | |
| | Customer Reconfiguration Establishment | | | | | | 1.48 | | 1.84 | | | | | | | |
| | DS1 DSC Termination with DS0 Switching | | | | | 29.46 | 25.55 | 19.66 | 16.63 | 13.38 | | | | | | |
| | DS1 DSC Termination with DS1 Switching | | | | | 9.94 | 18.47 | 12.58 | 12.21 | 8.96 | | | | | | |
| | DS3 DSC Termination with DS1 Switching | | | | | 105.16 | 25.55 | 19.66 | 16.63 | 13.38 | | | | | | |
| **Service Rearrangements** | | | | | | | | | | | | | | | | |
| | NRC - Change in Facility Assignment per circuit Service Rearrangement | I | | U1TVX, U1TDX, UEA, UDL, U1TUC, U1TUD, U1TUB, ULDVX, ULDDX, UNCVX, UNCDX | URETD | | 270.08 | 47.13 | | | | | | | | |
| | NRC - Change in Facility Assignment per circuit Project Management (added to CFA per circuit if project managed) | I | | U1TVX, U1TDX, UEA, UDL, U1TUC, U1TUD, U1TUB, ULDVX, ULDDX, UNCVX, UNCDX | URETB | | 1.28 | 1.28 | | | | | | | | |
| **Miscellaneous** | | | | | | | | | | | | | | | | |
| | NRC - Order Coordination Specific Time - Dedicated Transport | I | | UNC1X | OCOSR | | 18.93 | 18.93 | | | | | | | | |

| UNBUNDLED NETWORK ELEMENTS - Louisiana | | | | | | | | | | | | | | Attachment: 2 Exh. A | | | |
|---|---|---|---|---|---|---|---|---|---|---|---|---|---|---|---|---|---|
| CATEGORY | | RATE ELEMENTS | Interim | Zone | BCS | USOC | RATES($) | | | | | Svc Order Submitted Elec per LSR | Svc Order Submitted Manually per LSR | Incremental Charge - Manual Svc Order vs. Electronic-1st | Incremental Charge - Manual Svc Order vs. Electronic-Add'l | Incremental Charge - Manual Svc Order vs. Electronic-Disc 1st | Incremental Charge - Manual Svc Order vs. Electronic-Disc Add'l |
| | | | | | | | Rec | Nonrecurring | | Nonrecurring Disconnect | | OSS Rates($) | | | | | |
| | | | | | | | | First | Add'l | First | Add'l | SOMEC | SOMAN | SOMAN | SOMAN | SOMAN | SOMAN |
| | | | | | | | | | | | | | | | | | |
| | **The "Zone" shown in the sections for stand-alone loops or loops as part of a combination refers to Geographically Deaveraged UNE Zones. To view Geographically Deaveraged UNE Zone Designations by Central Office, refer to internet Website: http://www.interconnection.bellsouth.com/become_a_clec/html/interconnection.htm** | | | | | | | | | | | | | | | | |
| **OPERATIONS SUPPORT SYSTEMS (OSS) - "STATE SPECIFIC RATES"** | | | | | | | | | | | | | | | | | |
| | NOTE: (1) CLEC should contact its contract negotiator if it prefers the "regional" OSS charges as offered by BellSouth. The OSS charges currently contained in this rate exhibit are the PSC state ordered "state specificl" service ordering charges. CLEC may elect either the state specific Commission ordered rates for the service ordering charges, or CLEC may elect the regional service ordering charge, however, CLEC can not obtain a mixture of the two regardless if CLEC has a interconnection contract established in each of the 9 states. | | | | | | | | | | | | | | | | |
| | NOTE: (2) Any element that can be ordered electronically will be billed according to the SOMEC rate listed in this category. Please refer to BellSouth's Local Ordering Handbook (LOH) to determine if a product can be ordered electronically. For those elements that cannot be ordered electronically at present per the LOH, the listed SOMEC rate in this category reflects the charge that would be billed to a CLEC once electronic ordering capabilities come on-line for that element. Otherwise, the manual ordering charge, SOMAN, will be applied to a CLECs bill when it submits an LSR to BellSouth. | | | | | | | | | | | | | | | | |
| | | OSS - Electronic Service Order Charge, Per Local Service Request (LSR) - UNE Only | | | | SOMEC | | 2.98 | 0.00 | 2.98 | 0.00 | | | | | | |
| | | OSS - Manual Service Order Charge, Per Local Service Request (LSR) - UNE Only | | | | SOMAN | | 15.20 | 0.00 | 15.20 | 0.00 | | | | | | |
| **UNE SERVICE DATE ADVANCEMENT CHARGE** | | | | | | | | | | | | | | | | | |
| | **NOTE: The Expedite charge will be maintained commensurate with BellSouth's FCC No.1 Tariff, Section 5 as applicable.** | | | | | | | | | | | | | | | | |
| | | UNE Expedite Charge per Circuit or Line Assignable USOC, per Day | | | UAL, UEANL, UCL, UEF, UDF, UEQ, UDL, UENTW, UDN, UEA, UHL, ULC, USL, U1T12, U1T48, U1TD1, U1TD3, U1TDX, U1TO3, U1TS1, U1TVX, UC1BC, UC1BL, UC1CC, UC1CL, UC1DC, UC1DL, UC1EC, UC1EL, UC1FC, UC1FL, UC1GC, UC1GL, UC1HC, UC1HL, UDL12, UDL48, UDLO3, UDLSX, UE3, ULD12, ULD48, ULDD1, ULDD3, ULDDX, ULDO3, ULDS1, ULDVX, UNC1X, UNC3X, UNCDX, UNCNX, UNCSX, UNCVX, UNLD1, UNLD3, UXTD1, UXTD3, UXTS1, U1TUC, U1TUD, U1TUB, U1TUA,NTCVG, NTCUD, NTCD1 | SDASP | | 200.00 | 200.00 | | | | | | | | |
| **ORDER MODIFICATION CHARGE** | | | | | | | | | | | | | | | | | |
| | | Order Modification Charge (OMC) | | | | | | 26.21 | 0.00 | 0.00 | 0.00 | | | | | | |
| | | Order Modification Additional Dispatch Charge (OMCAD) | | | | | | 150.00 | 0.00 | 0.00 | 0.00 | | | | | | |
| **UNBUNDLED EXCHANGE ACCESS LOOP** | | | | | | | | | | | | | | | | | |
| | **2-WIRE ANALOG VOICE GRADE LOOP** | | | | | | | | | | | | | | | | |
| | | 2-Wire Analog Voice Grade Loop - Service Level 1- Zone 1 | | 1 | UEANL | UEAL2 | 12.90 | 36.54 | 16.87 | | | | | | | | |
| | | 2-Wire Analog Voice Grade Loop - Service Level 1- Zone 2 | | 2 | UEANL | UEAL2 | 23.33 | 36.54 | 16.87 | | | | | | | | |
| | | 2-Wire Analog Voice Grade Loop - Service Level 1- Zone 3 | | 3 | UEANL | UEAL2 | 48.43 | 36.54 | 16.87 | | | | | | | | |
| | | 2-Wire Analog Voice Grade Loop - Service Level 1- Zone 1 | | 1 | UEANL | UEASL | 12.90 | 36.54 | 16.87 | | | | | | | | |
| | | 2-Wire Analog Voice Grade Loop - Service Level 1- Zone 2 | | 2 | UEANL | UEASL | 23.33 | 36.54 | 16.87 | | | | | | | | |
| | | 2-Wire Analog Voice Grade Loop - Service Level 1- Zone 3 | | 3 | UEANL | UEASL | 48.43 | 36.54 | 16.87 | | | | | | | | |
| | | Unbundled Miscellaneous Rate Element, Tag Loop at End User Premise | | | UEANL | URETL | | 8.92 | 0.88 | | | | | | | | |

| UNBUNDLED NETWORK ELEMENTS - Louisiana | | | | | | | | | | | | | | Attachment: 2 Exh. A | | | |
|---|---|---|---|---|---|---|---|---|---|---|---|---|---|---|---|---|---|
| CATEGORY | | RATE ELEMENTS | Interim | Zone | BCS | USOC | RATES($) | | | | | Svc Order Submitted Elec per LSR | Svc Order Submitted Manually per LSR | Incremental Charge - Manual Svc Order vs. Electronic-1st | Incremental Charge - Manual Svc Order vs. Electronic-Add'l | Incremental Charge - Manual Svc Order vs. Electronic-Disc 1st | Incremental Charge - Manual Svc Order vs. Electronic-Disc Add'l |
| | | | | | | | Rec | Nonrecurring | | Nonrecurring Disconnect | | OSS Rates($) | | | | | |
| | | | | | | | | First | Add'l | First | Add'l | SOMEC | SOMAN | SOMAN | SOMAN | SOMAN | SOMAN |
| | | Loop Testing - Basic 1st Half Hour | | | UEANL | URET1 | | 33.17 | 0.00 | | | | | | | | |
| | | Loop Testing - Basic Additional Half Hour | | | UEANL | URETA | | 19.28 | 19.28 | | | | | | | | |
| | | CLEC to CLEC Conversion Charge Without Outside Dispatch (UVL-SL1) | | | UEANL | UREWO | | 15.75 | 8.93 | | | | | | | | |
| | | Unbundled Voice Loop, Non-Design Voice Loop, billing for BST providing make-up (Engineering Information - E.I.) | | | UEANL | UEANM | | 13.04 | 13.04 | | | | | | | | |
| | | Manual Order Coordination for UVL-SL1s (per loop) | | | UEANL | UEAMC | | 7.92 | 7.92 | | | | | | | | |
| | **2-WIRE Unbundled COPPER LOOP** | | | | | | | | | | | | | | | | |
| | | 2-Wire Unbundled Copper Loop - Non-Designed Zone 1 | I | 1 | UEQ | UEQ2X | 12.40 | 35.27 | 15.60 | | | | | | | | |
| | | 2 Wire Unbundled Copper Loop - Non-Designed - Zone 2 | I | 2 | UEQ | UEQ2X | 14.32 | 35.27 | 15.60 | | | | | | | | |
| | | 2 Wire Unbundled Copper Loop - Non-Designed - Zone 3 | I | 3 | UEQ | UEQ2X | 16.87 | 35.27 | 15.60 | | | | | | | | |
| | | Unbundled Miscellaneous Rate Element, Tag Loop at End User Premise | | | UEQ | URETL | | 8.92 | 0.88 | | | | | | | | |
| | | Manual Order Coordination 2 Wire Unbundled Copper Loop - Non-Designed (per loop) | | | UEQ | USBMC | | 7.92 | 7.92 | | | | | | | | |
| | | Unbundled Copper Loop, Non-Design Copper Loop, billing for BST providing make-up (Engineering Information - E.I.) | | | UEQ | UEQMU | | 13.04 | 13.04 | | | | | | | | |
| | | Loop Testing - Basic 1st Half Hour | | | UEQ | URET1 | | 33.17 | 0.00 | | | | | | | | |
| | | Loop Testing - Basic Additional Half Hour | | | UEQ | URETA | | 19.28 | 19.28 | | | | | | | | |
| | | CLEC to CLEC Conversion Charge Without Outside Dispatch (UCL-ND) | | | UEQ | UREWO | | 14.25 | 7.42 | | | | | | | | |
| **UNBUNDLED EXCHANGE ACCESS LOOP** | | | | | | | | | | | | | | | | | |
| | **2-WIRE ANALOG VOICE GRADE LOOP** | | | | | | | | | | | | | | | | |
| | | 2-Wire Analog Voice Grade Loop - Service Level 2 w/Loop or Ground Start Signaling - Zone 1 | | 1 | UEA, NTCVG | UEAL2 | 14.93 | 102.10 | 65.72 | | | | | | | | |
| | | 2-Wire Analog Voice Grade Loop - Service Level 2 w/Loop or Ground Start Signaling - Zone 2 | | 2 | UEA, NTCVG | UEAL2 | 25.35 | 102.10 | 65.72 | | | | | | | | |
| | | 2-Wire Analog Voice Grade Loop - Service Level 2 w/Loop or Ground Start Signaling - Zone 3 | | 3 | UEA, NTCVG | UEAL2 | 50.46 | 102.10 | 65.72 | | | | | | | | |
| | | 2-Wire Analog Voice Grade Loop - Service Level 2 w/Reverse Battery Signaling - Zone 1 | | 1 | UEA, NTCVG | UEAR2 | 14.93 | 102.10 | 65.72 | | | | | | | | |
| | | 2-Wire Analog Voice Grade Loop - Service Level 2 w/Reverse Battery Signaling - Zone 2 | | 2 | UEA, NTCVG | UEAR2 | 25.35 | 102.10 | 65.72 | | | | | | | | |
| | | 2-Wire Analog Voice Grade Loop - Service Level 2 w/Reverse Battery Signaling - Zone 3 | | 3 | UEA, NTCVG | UEAR2 | 50.46 | 102.10 | 65.72 | | | | | | | | |
| | | Switch-As-Is Conversion rate per UNE Loop, Single LSR, (per DS0) | | | UEA, NTCVG | URESL | | 21.98 | 3.16 | | | | | | | | |
| | | Switch-As-Is Conversion rate per UNE Loop, Spreadsheet, (per DS0) | | | UEA, NTCVG | URESP | | 23.39 | 4.57 | | | | | | | | |
| | | CLEC to CLEC Conversion Charge without outside dispatch | | | UEA, NTCVG | UREWO | | 87.59 | 36.30 | | | | | | | | |
| | | Loop Tagging - Service Level 2 (SL2) | | | UEA, NTCVG | URETL | | 11.20 | 1.10 | | | | | | | | |
| | **4-WIRE ANALOG VOICE GRADE LOOP** | | | | | | | | | | | | | | | | |
| | | 4-Wire Analog Voice Grade Loop - Zone 1 | | 1 | UEA, NTCVG | UEAL4 | 30.81 | 127.40 | 91.02 | | | | | | | | |
| | | 4-Wire Analog Voice Grade Loop - Zone 2 | | 2 | UEA, NTCVG | UEAL4 | 38.32 | 127.40 | 91.02 | | | | | | | | |
| | | 4-Wire Analog Voice Grade Loop - Zone 3 | | 3 | UEA, NTCVG | UEAL4 | 60.39 | 127.40 | 91.02 | | | | | | | | |
| | | Switch-As-Is Conversion rate per UNE Loop, Single LSR, (per DS0) | | | UEA, NTCVG | URESL | | 21.98 | 3.16 | | | | | | | | |
| | | Switch-As-Is Conversion rate per UNE Loop, Spreadsheet, (per DS0) | | | UEA, NTCVG | URESP | | 23.39 | 4.57 | | | | | | | | |
| | | CLEC to CLEC Conversion Charge without outside dispatch | | | UEA, NTCVG | UREWO | | 87.59 | 36.30 | | | | | | | | |
| | **2-WIRE ISDN DIGITAL GRADE LOOP** | | | | | | | | | | | | | | | | |
| | | 2-Wire ISDN Digital Grade Loop - Zone 1 | | 1 | UDN | U1L2X | 22.09 | 113.34 | 76.96 | | | | | | | | |
| | | 2-Wire ISDN Digital Grade Loop - Zone 2 | | 2 | UDN | U1L2X | 35.28 | 113.34 | 76.96 | | | | | | | | |
| | | 2-Wire ISDN Digital Grade Loop - Zone 3 | | 3 | UDN | U1L2X | 65.18 | 113.34 | 76.96 | | | | | | | | |
| | | CLEC to CLEC Conversion Charge without outside dispatch | | | UDN | UREWO | | 91.49 | 44.09 | | | | | | | | |
| | **2-WIRE ASYMMETRICAL DIGITAL SUBSCRIBER LINE (ADSL) COMPATIBLE LOOP** | | | | | | | | | | | | | | | | |
| | | 2 Wire Unbundled ADSL Loop including manual service inquiry & facility reservation - Zone 1 | | 1 | UAL | UAL2X | 12.29 | 117.08 | 68.36 | | | | | | | | |

| CATEGORY | | RATE ELEMENTS | Interim | Zone | BCS | USOC | RATES($) | | | | | Svc Order Submitted Elec per LSR | Svc Order Submitted Manually per LSR | Incremental Charge - Manual Svc Order vs. Electronic-1st | Incremental Charge - Manual Svc Order vs. Electronic-Add'l | Incremental Charge - Manual Svc Order vs. Electronic-Disc 1st | Incremental Charge - Manual Svc Order vs. Electronic-Disc Add'l |
|---|---|---|---|---|---|---|---|---|---|---|---|---|---|---|---|---|---|
| | | | | | | | Rec | Nonrecurring | | Nonrecurring Disconnect | | OSS Rates($) | | | | | |
| | | | | | | | | First | Add'l | First | Add'l | SOMEC | SOMAN | SOMAN | SOMAN | SOMAN | SOMAN |
| | | 2 Wire Unbundled ADSL Loop including manual service inquiry & facility reservation - Zone 2 | | 2 | UAL | UAL2X | 14.09 | 117.08 | 68.36 | | | | | | | | |
| | | 2 Wire Unbundled ADSL Loop including manual service inquiry & facility reservation - Zone 3 | | 3 | UAL | UAL2X | 15.75 | 117.08 | 68.36 | | | | | | | | |
| | | 2 Wire Unbundled ADSL Loop without manual service inquiry & facility reservaton - Zone 1 | | 1 | UAL | UAL2W | 12.29 | 92.83 | 56.02 | | | | | | | | |
| | | 2 Wire Unbundled ADSL Loop without manual service inquiry & facility reservaton - Zone 2 | | 2 | UAL | UAL2W | 14.09 | 92.83 | 56.02 | | | | | | | | |
| | | 2 Wire Unbundled ADSL Loop without manual service inquiry & facility reservaton - Zone 3 | | 3 | UAL | UAL2W | 15.75 | 92.83 | 56.02 | | | | | | | | |
| | | CLEC to CLEC Conversion Charge without outside dispatch | | | UAL | UREWO | | 86.07 | 40.34 | | | | | | | | |
| | **2-WIRE HIGH BIT RATE DIGITAL SUBSCRIBER LINE (HDSL) COMPATIBLE LOOP** | | | | | | | | | | | | | | | | |
| | | 2 Wire Unbundled HDSL Loop including manual service inquiry & facility reservation - Zone 1 | | 1 | UHL | UHL2X | 9.79 | 125.50 | 76.77 | | | | | | | | |
| | | 2 Wire Unbundled HDSL Loop including manual service inquiry & facility reservation - Zone 2 | | 2 | UHL | UHL2X | 11.52 | 125.50 | 76.77 | | | | | | | | |
| | | 2 Wire Unbundled HDSL Loop including manual service inquiry & facility reservation - Zone 3 | | 3 | UHL | UHL2X | 12.74 | 125.50 | 76.77 | | | | | | | | |
| | | 2 Wire Unbundled HDSL Loop without manual service inquiry and facility reservation - Zone 1 | | 1 | UHL | UHL2W | 9.79 | 101.24 | 64.43 | | | | | | | | |
| | | 2 Wire Unbundled HDSL Loop without manual service inquiry and facility reservation - Zone 2 | | 2 | UHL | UHL2W | 11.52 | 101.24 | 64.43 | | | | | | | | |
| | | 2 Wire Unbundled HDSL Loop without manual service inquiry and facility reservation - Zone 3 | | 3 | UHL | UHL2W | 12.74 | 101.24 | 64.43 | | | | | | | | |
| | | CLEC to CLEC Conversion Charge without outside dispatch | | | UHL | UREWO | | 86.00 | 40.34 | | | | | | | | |
| | **4-WIRE HIGH BIT RATE DIGITAL SUBSCRIBER LINE (HDSL) COMPATIBLE LOOP** | | | | | | | | | | | | | | | | |
| | | 4 Wire Unbundled HDSL Loop including manual service inquiry and facility reservation - Zone 1 | | 1 | UHL | UHL4X | 16.24 | 153.26 | 104.54 | | | | | | | | |
| | | 4-Wire Unbundled HDSL Loop including manual service inquiry and facility reservation - Zone 2 | | 2 | UHL | UHL4X | 16.65 | 153.26 | 104.54 | | | | | | | | |
| | | 4-Wire Unbundled HDSL Loop including manual service inquiry and facility reservation - Zone 3 | | 3 | UHL | UHL4X | 17.34 | 153.26 | 104.54 | | | | | | | | |
| | | 4-Wire Unbundled HDSL Loop without manual service inquiry and facility reservation - Zone 1 | | 1 | UHL | UHL4W | 16.24 | 129.00 | 92.20 | | | | | | | | |
| | | 4-Wire Unbundled HDSL Loop without manual service inquiry and facility reservation - Zone 2 | | 2 | UHL | UHL4W | 16.65 | 129.00 | 92.20 | | | | | | | | |
| | | 4-Wire Unbundled HDSL Loop without manual service inquiry and facility reservation - Zone 3 | | 3 | UHL | UHL4W | 17.34 | 129.00 | 92.20 | | | | | | | | |
| | | CLEC to CLEC Conversion Charge without outside dispatch | | | UHL | UREWO | | 86.00 | 40.34 | | | | | | | | |
| | **4-WIRE DS1 DIGITAL LOOP** | | | | | | | | | | | | | | | | |
| | | 4-Wire DS1 Digital Loop - Zone 1 | | 1 | USL, NTCD1 | USLXX | 85.70 | 245.16 | 152.98 | | | | | | | | |
| | | 4-Wire DS1 Digital Loop - Zone 2 | | 2 | USL, NTCD1 | USLXX | 194.96 | 245.16 | 152.98 | | | | | | | | |
| | | 4-Wire DS1 Digital Loop - Zone 3 | | 3 | USL, NTCD1 | USLXX | 491.94 | 245.16 | 152.98 | | | | | | | | |
| | | Switch-As-Is Conversion rate per UNE Loop, Single LSR, (per DS1) | | | USL, NTCD1 | URESL | | 21.98 | 3.16 | | | | | | | | |
| | | Switch-As-Is Conversion rate per UNE Loop, Spreadsheet, (per DS1) | | | USL, NTCD1 | URESP | | 23.39 | 4.57 | | | | | | | | |
| | | CLEC to CLEC Conversion Charge without outside dispatch | | | USL | UREWO | | 100.93 | 42.98 | | | | | | | | |
| | **4-WIRE 19.2, 56 OR 64 KBPS DIGITAL GRADE LOOP** | | | | | | | | | | | | | | | | |
| | | 4 Wire Unbundled Digital 19.2 Kbps | | 1 | UDL, NTCUD | UDL19 | 30.99 | 121.86 | 85.48 | | | | | | | | |
| | | 4 Wire Unbundled Digital 19.2 Kbps | | 2 | UDL, NTCUD | UDL19 | 36.78 | 121.86 | 85.48 | | | | | | | | |
| | | 4 Wire Unbundled Digital 19.2 Kbps | | 3 | UDL, NTCUD | UDL19 | 38.92 | 121.86 | 85.48 | | | | | | | | |
| | | 4 Wire Unbundled Digital Loop 56 Kbps - Zone 1 | | 1 | UDL, NTCUD | UDL56 | 30.99 | 121.86 | 85.48 | | | | | | | | |
| | | 4 Wire Unbundled Digital Loop 56 Kbps - Zone 2 | | 2 | UDL, NTCUD | UDL56 | 36.78 | 121.86 | 85.48 | | | | | | | | |
| | | 4 Wire Unbundled Digital Loop 56 Kbps - Zone 3 | | 3 | UDL, NTCUD | UDL56 | 38.92 | 121.86 | 85.48 | | | | | | | | |
| | | 4 Wire Unbundled Digital Loop 64 Kbps - Zone 1 | | 1 | UDL, NTCUD | UDL64 | 30.99 | 121.86 | 85.48 | | | | | | | | |
| | | 4 Wire Unbundled Digital Loop 64 Kbps - Zone 2 | | 2 | UDL, NTCUD | UDL64 | 36.78 | 121.86 | 85.48 | | | | | | | | |
| | | 4 Wire Unbundled Digital Loop 64 Kbps - Zone 3 | | 3 | UDL, NTCUD | UDL64 | 38.92 | 121.86 | 85.48 | | | | | | | | |

| CATEGORY | | RATE ELEMENTS | Interim | Zone | BCS | USOC | RATES($) | | | | | Svc Order Submitted Elec per LSR | Svc Order Submitted Manually per LSR | Incremental Charge - Manual Svc Order vs. Electronic-1st | Incremental Charge - Manual Svc Order vs. Electronic-Add'l | Incremental Charge - Manual Svc Order vs. Electronic-Disc 1st | Incremental Charge - Manual Svc Order vs. Electronic-Disc Add'l |
|---|---|---|---|---|---|---|---|---|---|---|---|---|---|---|---|---|---|
| | | | | | | | Rec | Nonrecurring | | Nonrecurring Disconnect | | OSS Rates($) | | | | | |
| | | | | | | | | First | Add'l | First | Add'l | SOMEC | SOMAN | SOMAN | SOMAN | SOMAN | SOMAN |
| | | Switch-As-Is Conversion rate per UNE Loop, Single LSR, (per DS0) | | | UDL, NTCUD | URESL | | 21.98 | 3.16 | | | | | | | | |
| | | Switch-As-Is Conversion rate per UNE Loop, Spreadsheet, (per DS0) | | | UDL, NTCUD | URESP | | 23.39 | 4.57 | | | | | | | | |
| | | CLEC to CLEC Conversion Charge without outside dispatch | | | UDL, NTCUD | UREWO | | 101.97 | 49.67 | | | | | | | | |
| | **2-WIRE Unbundled COPPER LOOP** | | | | | | | | | | | | | | | | |
| | | 2-Wire Unbundled Copper Loop-Designed including manual service inquiry & facility reservation - Zone 1 | | 1 | UCL | UCLPB | 12.29 | 116.18 | 67.46 | | | | | | | | |
| | | 2-Wire Unbundled Copper Loop-Designed including manual service inquiry & facility reservation - Zone 2 | | 2 | UCL | UCLPB | 14.09 | 116.18 | 67.46 | | | | | | | | |
| | | 2 Wire Unbundled Copper Loop-Designed including manual service inquiry & facility reservation - Zone 3 | | 3 | UCL | UCLPB | 15.75 | 116.18 | 67.46 | | | | | | | | |
| | | 2-Wire Unbundled Copper Loop-Designed without manual service inquiry and facility reservation - Zone 1 | | 1 | UCL | UCLPW | 12.29 | 91.92 | 55.12 | | | | | | | | |
| | | 2-Wire Unbundled Copper Loop-Designed without manual service inquiry and facility reservation - Zone 2 | | 2 | UCL | UCLPW | 14.09 | 91.92 | 55.12 | | | | | | | | |
| | | 2-Wire Unbundled Copper Loop-Designed without manual service inquiry and facility reservation - Zone 3 | | 3 | UCL | UCLPW | 15.75 | 91.92 | 55.12 | | | | | | | | |
| | | CLEC to CLEC Conversion Charge without outside dispatch (UCL-Des) | | | UCL | UREWO | | 91.92 | 42.47 | | | | | | | | |
| | **4-WIRE COPPER LOOP** | | | | | | | | | | | | | | | | |
| | | 4-Wire Copper Loop-Designed including manual service inquiry and facility reservation - Zone 1 | | 1 | UCL | UCL4S | 22.27 | 139.69 | 90.96 | | | | | | | | |
| | | 4-Wire Copper Loop-Designed including manual service inquiry and facility reservation - Zone 2 | | 2 | UCL | UCL4S | 18.95 | 139.69 | 90.96 | | | | | | | | |
| | | 4-Wire Copper Loop-Designed including manual service inquiry and facility reservation - Zone 3 | | 3 | UCL | UCL4S | 10.99 | 139.69 | 90.96 | | | | | | | | |
| | | 4-Wire Copper Loop-Designed without manual service inquiry and facility reservation - Zone 1 | | 1 | UCL | UCL4W | 22.27 | 115.43 | 78.63 | | | | | | | | |
| | | 4-Wire Copper Loop-Designed without manual service inquiry and facility reservation - Zone 2 | | 2 | UCL | UCL4W | 18.95 | 115.43 | 78.63 | | | | | | | | |
| | | 4-Wire Copper Loop-Designed without manual service inquiry and facility reservation - Zone 3 | | 3 | UCL | UCL4W | 10.99 | 115.43 | 78.63 | | | | | | | | |
| | | CLEC to CLEC Conversion Charge without outside dispatch (UCL-Des) | | | UCL | UREWO | | 91.92 | 42.47 | | | | | | | | |
| | | Order Coordination for Unbundled Copper Loops (per loop) | | | UCL | UCLMC | | 7.92 | 7.92 | | | | | | | | |
| | | Order Coordination for Specified Conversion Time (per LSR) | | | UEA, UDN, UAL, UHL, UDL, NTCVG, NTCUD, USL, NTCD1, UEANL | OCOSL | | 17.56 | | | | | | | | | |
| **LOOP MODIFICATION** | | | | | | | | | | | | | | | | | |
| | | Unbundled Loop Modification, Removal of Load Coils - 2 Wire pair less than or equal to 18k ft, per Unbundled Loop | | | UAL, UHL, UCL, UEQ, ULS, UEA, UEANL, UEPSR, UEPSB | ULM2L | | 0.00 | 0.00 | | | | | | | | |
| | | Unbundled Loop Modification Removal of Load Coils - 4 Wire less than or equal to 18K ft, per Unbundled Loop | | | UHL, UCL, UEA | ULM4L | | 0.00 | 0.00 | | | | | | | | |
| | | Unbundled Loop Modification Removal of Bridged Tap Removal, per unbundled loop | | | UAL, UHL, UCL, UEQ, ULS, UEA, UEANL, UEPSR, UEPSB | ULMBT | | 12.15 | 12.15 | | | | | | | | |
| **SUB-LOOPS** | | | | | | | | | | | | | | | | | |
| | **Sub-Loop Distribution** | | | | | | | | | | | | | | | | |
| | | Sub-Loop - Per Cross Box Location - CLEC Feeder Facility Set-Up | | | UEANL, UEF | USBSA | | 144.09 | 144.09 | | | | | | | | |
| | | Sub-Loop - Per Cross Box Location - Per 25 Pair Panel Set-Up | | | UEANL, UEF | USBSB | | 10.99 | 10.99 | | | | | | | | |
| | | Sub-Loop - Per Building Equipment Room - CLEC Feeder Facility Set-Up | | | UEANL | USBSC | | 86.16 | 86.16 | | | | | | | | |

| UNBUNDLED NETWORK ELEMENTS - Louisiana | | | | | | | | | | | | | Attachment: 2 Exh. A | | | |
|---|---|---|---|---|---|---|---|---|---|---|---|---|---|---|---|---|
| CATEGORY | RATE ELEMENTS | Interim | Zone | BCS | USOC | RATES($) | | | | | Svc Order Submitted Elec per LSR | Svc Order Submitted Manually per LSR | Incremental Charge - Manual Svc Order vs. Electronic-1st | Incremental Charge - Manual Svc Order vs. Electronic-Add'l | Incremental Charge - Manual Svc Order vs. Electronic-Disc 1st | Incremental Charge - Manual Svc Order vs. Electronic-Disc Add'l |
| | | | | | | Rec | Nonrecurring | | Nonrecurring Disconnect | | OSS Rates($) | | | | | |
| | | | | | | | First | Add'l | First | Add'l | SOMEC | SOMAN | SOMAN | SOMAN | SOMAN | SOMAN |
| | Sub-Loop - Per Building Equipment Room - Per 25 Pair Panel Set-Up | | | UEANL | USBSD | | 27.13 | 27.13 | | | | | | | | |
| | Sub-Loop Distribution Per 2-Wire Analog Voice Grade Loop - Zone 1 | | 1 | UEANL | USBN2 | 7.57 | 63.89 | 30.06 | | | | | | | | |
| | Sub-Loop Distribution Per 2-Wire Analog Voice Grade Loop - Zone 2 | | 2 | UEANL | USBN2 | 12.75 | 63.89 | 30.06 | | | | | | | | |
| | Sub-Loop Distribution Per 2-Wire Analog Voice Grade Loop - Zone 3 | | 3 | UEANL | USBN2 | 21.45 | 63.89 | 30.06 | | | | | | | | |
| | Order Coordination for Unbundled Sub-Loops, per sub-loop pair | | | UEANL | USBMC | | 7.92 | 7.92 | | | | | | | | |
| | Sub-Loop Distribution Per 4-Wire Analog Voice Grade Loop - Zone 1 | | 1 | UEANL | USBN4 | 11.76 | 76.75 | 42.92 | | | | | | | | |
| | Sub-Loop Distribution Per 4-Wire Analog Voice Grade Loop - Zone 2 | | 2 | UEANL | USBN4 | 16.84 | 76.75 | 42.92 | | | | | | | | |
| | Sub-Loop Distribution Per 4-Wire Analog Voice Grade Loop - Zone 3 | | 3 | UEANL | USBN4 | 19.27 | 76.75 | 42.92 | | | | | | | | |
| | Order Coordination for Unbundled Sub-Loops, per sub-loop pair | | | UEANL | USBMC | | 7.92 | 7.92 | | | | | | | | |
| | Sub-Loop 2-Wire Intrabuilding Network Cable (INC) | | | UEANL | USBR2 | 2.91 | 51.48 | 17.65 | | | | | | | | |
| | Order Coordination for Unbundled Sub-Loops, per sub-loop pair | | | UEANL | USBMC | | 7.92 | 7.92 | | | | | | | | |
| | Sub-Loop 4-Wire Intrabuilding Network Cable (INC) | | | UEANL | USBR4 | 6.58 | 57.54 | 23.71 | | | | | | | | |
| | Order Coordination for Unbundled Sub-Loops, per sub-loop pair | | | UEANL | USBMC | | 7.92 | 7.92 | | | | | | | | |
| | Loop Testing - Basic 1st Half Hour | | | UEANL | URET1 | | 33.17 | 0.00 | | | | | | | | |
| | Loop Testing - Basic Additional Half Hour | | | UEANL | URETA | | 19.28 | 19.28 | | | | | | | | |
| | 2 Wire Copper Unbundled Sub-Loop Distribution - Zone 1 | | 1 | UEF | UCS2X | 6.26 | 63.89 | 30.06 | | | | | | | | |
| | 2 Wire Copper Unbundled Sub-Loop Distribution - Zone 2 | | 2 | UEF | UCS2X | 10.07 | 63.89 | 30.06 | | | | | | | | |
| | 2 Wire Copper Unbundled Sub-Loop Distribution - Zone 3 | | 3 | UEF | UCS2X | 12.70 | 63.89 | 30.06 | | | | | | | | |
| | Order Coordination for Unbundled Sub-Loops, per sub-loop pair | | | UEF | USBMC | | 7.92 | 7.92 | | | | | | | | |
| | 4 Wire Copper Unbundled Sub-Loop Distribution - Zone 1 | | 1 | UEF | UCS4X | 8.03 | 76.75 | 42.92 | | | | | | | | |
| | 4 Wire Copper Unbundled Sub-Loop Distribution - Zone 2 | | 2 | UEF | UCS4X | 10.71 | 76.75 | 42.92 | | | | | | | | |
| | 4 Wire Copper Unbundled Sub-Loop Distribution - Zone 3 | | 3 | UEF | UCS4X | 6.08 | 76.75 | 42.92 | | | | | | | | |
| | Order Coordination for Unbundled Sub-Loops, per sub-loop pair | | | UEF | USBMC | | 7.92 | 7.92 | | | | | | | | |
| | Loop Tagging Service Level 1, Unbundled Copper Loop, Non-Designed and Distribution Subloops | | | UEF, UEANL | URETL | | 8.92 | 0.88 | | | | | | | | |
| | Loop Testing - Basic 1st Half Hour | | | UEF | URET1 | | 33.17 | 0.00 | | | | | | | | |
| | Loop Testing - Basic Additional Half Hour | | | UEF | URETA | | 19.28 | 19.28 | | | | | | | | |
| **Unbundled Sub-Loop Modification** | | | | | | | | | | | | | | | | |
| | Unbundled Sub-Loop Modification - 2-W Copper Dist Load Coil/Equip Removal per 2-W PR | | | UEF | ULM2X | | 0.00 | 0.00 | | | | | | | | |
| | Unbundled Sub-loop Modification - 4-W Copper Dist Load Coil/Equip Removal per 4-W PR | | | UEF | ULM4X | | 0.00 | 0.00 | | | | | | | | |
| | Unbundled Loop Modification, Removal of Bridge Tap, per unbundled loop | | | UEF | ULMBT | | 224.55 | 4.29 | | | | | | | | |
| **Unbundled Network Terminating Wire (UNTW)** | | | | | | | | | | | | | | | | |
| | Unbundled Network Terminating Wire (UNTW) per Pair | | | UENTW | UENPP | 0.3454 | 14.72 | 14.72 | | | | | | | | |
| **Network Interface Device (NID)** | | | | | | | | | | | | | | | | |
| | Network Interface Device (NID) - 1-2 lines | | | UENTW | UND12 | | 42.26 | 27.83 | | | | | | | | |
| | Network Interface Device (NID) - 1-6 lines | | | UENTW | UND16 | | 62.86 | 48.43 | | | | | | | | |
| | Network Interface Device Cross Connect - 2 W | | | UENTW | UNDC2 | | 5.73 | 5.73 | | | | | | | | |
| | Network Interface Device Cross Connect - 4W | | | UENTW | UNDC4 | | 5.73 | 5.73 | | | | | | | | |
| **UNE OTHER, PROVISIONING ONLY - NO RATE** | | | | | | | | | | | | | | | | |

| UNBUNDLED NETWORK ELEMENTS - Louisiana | | | | | | | | | | | | | | Attachment: 2 Exh. A | | | |
|---|---|---|---|---|---|---|---|---|---|---|---|---|---|---|---|---|---|
| CATEGORY | | RATE ELEMENTS | Interim | Zone | BCS | USOC | RATES($) | | | | | Svc Order Submitted Elec per LSR | Svc Order Submitted Manually per LSR | Incremental Charge - Manual Svc Order vs. Electronic-1st | Incremental Charge - Manual Svc Order vs. Electronic-Add'l | Incremental Charge - Manual Svc Order vs. Electronic-Disc 1st | Incremental Charge - Manual Svc Order vs. Electronic-Disc Add'l |
| | | | | | | | Rec | Nonrecurring | | Nonrecurring Disconnect | | OSS Rates($) | | | | | |
| | | | | | | | | First | Add'l | First | Add'l | SOMEC | SOMAN | SOMAN | SOMAN | SOMAN | SOMAN |
| | | Unbundled Contact Name, Provisioning Only - no rate | | | UAL, UCL, UDC, UDL, UDN, UEA, UHL, UEANL, UEF, UEQ, UENTW, NTCVG, NTCUD, NTCD1, USL | UNECN | 0.00 | 0.00 | | | | | | | | | |
| | | Unbundled DS1 Loop - Superframe Format Option - no rate | | | USL | CCOSF | 0.00 | 0.00 | | | | | | | | | |
| | | Unbundled DS1 Loop - Expanded Superframe Format option - no rate | | | USL | CCOEF | 0.00 | 0.00 | | | | | | | | | |
| | | NID - Dispatch and Service Order for NID installation | | | UENTW | UNDBX | 0.00 | 0.00 | | | | | | | | | |
| | | UNTW Circuit Establishment, Provisioning Only - No Rate | | | UENTW | UENCE | 0.00 | 0.00 | | | | | | | | | |
| **HIGH CAPACITY UNBUNDLED LOCAL LOOP** | | | | | | | | | | | | | | | | | |
| | **NOTE: minimum billing period of three months for DS3/STS-1 Local Loop** | | | | | | | | | | | | | | | | |
| | | High Capacity Unbundled Local Loop - DS3 - Per Mile per month | | | UE3 | 1L5ND | 10.04 | | | | | | | | | | |
| | | High Capacity Unbundled Local Loop - DS3 - Facility Termination per month | | | UE3 | UE3PX | 362.34 | 438.46 | 256.30 | | | | | | | | |
| | | High Capacity Unbundled Local Loop - STS-1 - Per Mile per month | | | UDLSX | 1L5ND | 10.04 | | | | | | | | | | |
| | | High Capacity Unbundled Local Loop - STS-1 - Facility Termination per month | | | UDLSX | UDLS1 | 374.56 | 438.46 | 256.30 | | | | | | | | |
| **LOOP MAKE-UP** | | | | | | | | | | | | | | | | | |
| | | Loop Makeup - Preordering Without Reservation, per working or spare facility queried (Manual). | | | UMK | UMKLW | | 23.29 | 23.29 | | | | | | | | |
| | | Loop Makeup - Preordering With Reservation, per spare facility queried (Manual). | | | UMK | UMKLP | | 24.70 | 24.70 | | | | | | | | |
| | | Loop Makeup--With or Without Reservation, per working or spare facility queried (Mechanized) | | | UMK | UMKMQ | | 0.19 | 0.19 | | | | | | | | |
| **LINE SPLITTING** | | | | | | | | | | | | | | | | | |
| | **END USER ORDERING-CENTRAL OFFICE BASED** | | | | | | | | | | | | | | | | |
| | | Line Splitting - per line activation DLEC owned splitter | | | UEPSR UEPSB | UREOS | 0.61 | | | | | | | | | | |
| | | Line Splitting - per line activation BST owned - physical | | | UEPSR UEPSB | UREBP | 0.61 | 17.97 | 10.29 | | | | | | | | |
| | | Line Splitting - per line activation BST owned - virtual | | | UEPSR UEPSB | UREBV | 0.61 | 17.97 | 10.29 | | | | | | | | |
| | **UNBUNDLED EXCHANGE ACCESS LOOP** | | | | | | | | | | | | | | | | |
| | **2-WIRE ANALOG VOICE GRADE LOOP** | | | | | | | | | | | | | | | | |
| | | 2 Wire Analog Voice Grade Loop-Service Level 1-Line Splitting-Zone 1 | | 1 | UEPSR UEPSB | UEALS | 12.90 | 36.54 | 16.87 | 0.00 | 0.00 | | | | | | |
| | | 2 Wire Analog Voice Grade Loop-Service Level 1-Line Splitting-Zone 1 | | 1 | UEPSR UEPSB | UEABS | 12.90 | 36.54 | 16.87 | 0.00 | 0.00 | | | | | | |
| | | 2 Wire Analog Voice Grade Loop- Service Level 1-Line Splitting-Zone 2 | | 2 | UEPSR UEPSB | UEALS | 23.33 | 36.54 | 16.87 | 0.00 | 0.00 | | | | | | |
| | | 2 Wire Analog Voice Grade Loop- Service Level 1-Line Splitting-Zone 2 | | 2 | UEPSR UEPSB | UEABS | 23.33 | 36.54 | 16.87 | 0.00 | 0.00 | | | | | | |
| | | 2 Wire Analog Voice Grade Loop-Service Level 1-Line Splitting-Zone 3 | | 3 | UEPSR UEPSB | UEALS | 48.43 | 36.54 | 16.87 | 0.00 | 0.00 | | | | | | |
| | | 2 Wire Analog Voice Grade Loop-Service Level 1-Line Splitting-Zone 3 | | 3 | UEPSR UEPSB | UEABS | 48.43 | 36.54 | 16.87 | 0.00 | 0.00 | | | | | | |
| | **PHYSICAL COLLOCATION** | | | | | | | | | | | | | | | | |
| | | Physical Collocation-2 Wire Cross Connects (Loop) for Line Splitting | | | UEPSR UEPSB | PE1LS | 0.0318 | 11.94 | 11.46 | 0.00 | 0.00 | | | | | | |
| | **VIRTUAL COLLOCATION** | | | | | | | | | | | | | | | | |
| | | Virtual Collocation-2 Wire Cross Connects (Loop) for Line Splitting | | | UEPSR UEPSB | VE1LS | 0.0296 | 11.94 | 11.46 | 0.00 | 0.00 | | | | | | |
| **UNBUNDLED DEDICATED TRANSPORT** | | | | | | | | | | | | | | | | | |
| | **INTEROFFICE CHANNEL - DEDICATED TRANSPORT** | | | | | | | | | | | | | | | | |
| | | Interoffice Channel - Dedicated Transport - 2-Wire Voice Grade - Per Mile per month | | | U1TVX | 1L5XX | 0.013 | | | | | | | | | | |
| | | Interoffice Channel - Dedicated Transport- 2- Wire Voice Grade - Facility Termination | | | U1TVX | U1TV2 | 22.60 | 39.36 | 26.62 | | | | | | | | |

| CATEGORY | RATE ELEMENTS | Interim | Zone | BCS | USOC | RATES($) Rec | Nonrecurring First | Nonrecurring Add'l | Nonrecurring Disconnect First | Nonrecurring Disconnect Add'l | Svc Order Submitted Elec per LSR | Svc Order Submitted Manually per LSR | Incremental Charge - Manual Svc Order vs. Electronic- 1st | Incremental Charge - Manual Svc Order vs. Electronic- Add'l | Incremental Charge - Manual Svc Order vs. Electronic- Disc 1st | Incremental Charge - Manual Svc Order vs. Electronic- Disc Add'l |
|---|---|---|---|---|---|---|---|---|---|---|---|---|---|---|---|---|
| | | | | | | | | | | | OSS Rates($) | | | | | |
| | | | | | | | | | | | SOMEC | SOMAN | SOMAN | SOMAN | SOMAN | SOMAN |
| | Interoffice Channel - Dedicated Transpor t- 2-Wire Voice Grade Rev Bat. - Per Mile per month | | | U1TVX | 1L5XX | 0.013 | | | | | | | | | | |
| | Interoffice Channel - Dedicated Transport- 2- Wire VG Rev Bat. - Facility Termination | | | U1TVX | U1TR2 | 22.60 | 39.36 | 26.62 | | | | | | | | |
| | Interoffice Channel - Dedicated Transport - 4-Wire Voice Grade - Per Mile per month | | | U1TVX | 1L5XX | 0.013 | | | | | | | | | | |
| | Interoffice Channel - Dedicated Transport - 4- Wire Voice Grade - Facility Termination | | | U1TVX | U1TV4 | 19.81 | 39.36 | 26.62 | | | | | | | | |
| | Wholesale to UNE Switch-As-Is Charge | | | U1TVX | UNCCC | | 5.43 | 5.43 | | | | | | | | |
| | Interoffice Channel - Dedicated Transport - 56 kbps - per mile per month | | | U1TDX | 1L5XX | 0.013 | | | | | | | | | | |
| | Interoffice Channel - Dedicated Transport - 56 kbps - Facility Termination | | | U1TDX | U1TD5 | 15.61 | 39.37 | 26.62 | | | | | | | | |
| | Interoffice Channel - Dedicated Transport - 64 kbps - per mile per month | | | U1TDX | 1L5XX | 0.013 | | | | | | | | | | |
| | Interoffice Channel - Dedicated Transport - 64 kbps - Facility Termination | | | U1TDX | U1TD6 | 15.61 | 39.37 | 26.62 | | | | | | | | |
| | Wholesale to UNE Switch-As-Is Charge | | | U1TDX | UNCCC | | 5.43 | 5.43 | | | | | | | | |
| | Interoffice Channel - Dedicated Channel - DS1 - Per Mile per month | | | U1TD1 | 1L5XX | 0.2652 | | | | | | | | | | |
| | Interoffice Channel - Dedicated Tranport - DS1 - Facility Termination | | | U1TD1 | U1TF1 | 70.47 | 86.69 | 79.44 | | | | | | | | |
| | Wholesale to UNE Switch-As-Is Charge | | | U1TD1 | UNCCC | | 5.43 | 5.43 | | | | | | | | |
| | Interoffice Channel - Dedicated Transport - DS3 - Per Mile per month | | | U1TD3 | 1L5XX | 6.04 | | | | | | | | | | |
| | Interoffice Channel - Dedicated Transport - DS3 - Facility Termination per month | | | U1TD3 | U1TF3 | 850.45 | 270.69 | 158.05 | | | | | | | | |
| | Wholesale to UNE Switch-As-Is Charge | | | U1TD3 | UNCCC | | 5.43 | 5.43 | | | | | | | | |
| | Interoffice Channel - Dedicated Transport - STS-1 - Per Mile per month | | | U1TS1 | 1L5XX | 6.04 | | | | | | | | | | |
| | Interoffice Channel - Dedicated Transport - STS-1 - Facility Termination | | | U1TS1 | U1TFS | 830.19 | 270.69 | 158.05 | | | | | | | | |
| | Wholesale to UNE Switch-As-Is Charge | | | U1TS1 | UNCCC | | 5.43 | 5.43 | | | | | | | | |
| | **UNBUNDLED DARK FIBER** | | | | | | | | | | | | | | | |
| | Dark Fiber, Per Four Fiber Strands, Per Route Mile Or Fraction Thereof - Interoffice Transport | | | UDF, UDFCX | 1L5DF | 25.28 | 620.60 | 133.88 | | | | | | | | |
| **911 PBX LOCATE** | | | | | | | | | | | | | | | | |
| | **911 PBX LOCATE DATABASE CAPABILITY** | | | | | | | | | | | | | | | |
| | Service Establishment per CLEC per End User Account | | | 9PBDC | 9PBEU | | 1,819.00 | | | | | | | | | |
| | Changes to TN Range or Customer Profile | | | 9PBDC | 9PBTN | | 181.99 | | | | | | | | | |
| | Per Telephone Number (Monthly) | | | 9PBDC | 9PBMM | 0.07 | | | | | | | | | | |
| | Change Company (Service Provider) ID | | | 9PBDC | 9PBPC | | 534.22 | | | | | | | | | |
| | PBX Locate Service Support per CLEC (MonthIt) | | | 9PBDC | 9PBMR | 178.58 | | | | | | | | | | |
| | Service Order Charge | | | 9PBDC | 9PBSC | | 15.20 | | | | | | | | | |
| | **911 PBX LOCATE TRANSPORT COMPONENT** | | | | | | | | | | | | | | | |
| | **See Att 3** | | | | | | | | | | | | | | | |
| **ENHANCED EXTENDED LINK (EELs)** | | | | | | | | | | | | | | | | |
| | **NOTE: The monthly recurring and non-recurring charges below will apply and the Switch-As-Is Charge will not apply for UNE combinations provisioned as ' Ordinarily Combined' Network Elements.** | | | | | | | | | | | | | | | |
| | **NOTE: The monthly recurring and the Switch-As-Is Charge and not the non-recurring charges below will apply for UNE combinations provisioned as ' Currently Combined' Network Elements.** | | | | | | | | | | | | | | | |
| | **EXTENTED 2-WIRE VOICE GRADE EXTENDED LOOP WITH DEDICATED DS1 INTEROFFICE TRANSPORT** | | | | | | | | | | | | | | | |
| | First 2-Wire VG Loop (SL2) in Combination - Zone 1 | | 1 | UNCVX | UEAL2 | 14.93 | 94.21 | 45.09 | | | | | | | | |
| | First 2-Wire VG Loop (SL2) in Combination - Zone 2 | | 2 | UNCVX | UEAL2 | 25.35 | 94.21 | 45.09 | | | | | | | | |
| | First 2-Wire VG Loop (SL2) in Combination - Zone 3 | | 3 | UNCVX | UEAL2 | 50.46 | 94.21 | 45.09 | | | | | | | | |
| | Interoffice Transport - Dedicated - DS1 combination - Per Mile per month | | | UNC1X | 1L5XX | 0.2652 | | | | | | | | | | |
| | Interoffice Transport - Dedicated - DS1 combination - Facility Termination per month | | | UNC1X | U1TF1 | 70.47 | 143.58 | 103.88 | | | | | | | | |
| | 1/0 Channelization System in combination Per Month | | | UNC1X | MQ1 | 105.09 | 59.97 | 12.96 | | | | | | | | |
| | Voice Grade COCI - Per Month | | | UNCVX | 1D1VG | 0.6497 | 5.91 | 4.26 | | | | | | | | |

| CATEGORY | | RATE ELEMENTS | Interim | Zone | BCS | USOC | RATES($) | | | | | Svc Order Submitted Elec per LSR | Svc Order Submitted Manually per LSR | Incremental Charge - Manual Svc Order vs. Electronic-1st | Incremental Charge - Manual Svc Order vs. Electronic-Add'l | Incremental Charge - Manual Svc Order vs. Electronic-Disc 1st | Incremental Charge - Manual Svc Order vs. Electronic-Disc Add'l |
|---|---|---|---|---|---|---|---|---|---|---|---|---|---|---|---|---|---|
| | | | | | | | Rec | Nonrecurring | | Nonrecurring Disconnect | | OSS Rates($) | | | | | |
| | | | | | | | | First | Add'l | First | Add'l | SOMEC | SOMAN | SOMAN | SOMAN | SOMAN | SOMAN |
| | | Each Additional 2-Wire VG Loop (SL 2) in Combination - Zone 1 | | 1 | UNCVX | UEAL2 | 14.93 | 94.21 | 45.09 | | | | | | | | |
| | | Each Additional 2-Wire VG Loop (SL 2) in Combination - Zone 2 | | 2 | UNCVX | UEAL2 | 25.35 | 94.21 | 45.09 | | | | | | | | |
| | | Each Additional 2-Wire VG Loop (SL 2) in Combination - Zone 3 | | 3 | UNCVX | UEAL2 | 50.46 | 94.21 | 45.09 | | | | | | | | |
| | | Voice Grade COCI - Per Month | | | UNCVX | 1D1VG | 0.6497 | 5.91 | 4.26 | | | | | | | | |
| | | Wholesale to UNE, Switch-As-Is Charge | | | UNC1X | UNCCC | | 5.43 | 5.43 | | | | | | | | |
| | EXTENDED 4-WIRE VOICE GRADE EXTENDED LOOP WITH DEDICATED DS1 INTEROFFICE TRANSPORT | | | | | | | | | | | | | | | | |
| | | First 4-Wire Analog Voice Grade Loop in Combination - Zone 1 | | 1 | UNCVX | UEAL4 | 30.81 | 94.21 | 45.09 | | | | | | | | |
| | | First 4-Wire Analog Voice Grade Loop in Combination - Zone 2 | | 2 | UNCVX | UEAL4 | 38.32 | 94.21 | 45.09 | | | | | | | | |
| | | First 4-Wire Analog Voice Grade Loop in Combination - Zone 3 | | 3 | UNCVX | UEAL4 | 60.39 | 94.21 | 45.09 | | | | | | | | |
| | | Interoffice Transport - Dedicated - DS1 combination - Per Mile Per Month | | | UNC1X | 1L5XX | 0.2652 | | | | | | | | | | |
| | | Interoffice Transport - Dedicated - DS1 - Facility Termination Per Month | | | UNC1X | U1TF1 | 70.47 | 143.58 | 103.88 | | | | | | | | |
| | | 1/0 Channel System in combination Per Month | | | UNC1X | MQ1 | 105.09 | 59.97 | 12.96 | | | | | | | | |
| | | Voice Grade COCI in combination - per month | | | UNCVX | 1D1VG | 0.6497 | 5.91 | 4.26 | | | | | | | | |
| | | Additional 4-Wire Analog Voice Grade Loop in same DS1 Interoffice Transport Combination - Zone 1 | | 1 | UNCVX | UEAL4 | 30.81 | 94.21 | 45.09 | | | | | | | | |
| | | Additional 4-Wire Analog Voice Grade Loop in same DS1 Interoffice Transport Combination - Zone 2 | | 2 | UNCVX | UEAL4 | 38.32 | 94.21 | 45.09 | | | | | | | | |
| | | Additional 4-Wire Analog Voice Grade Loop in same DS1 Interoffice Transport Combination - Zone 3 | | 3 | UNCVX | UEAL4 | 60.39 | 94.21 | 45.09 | | | | | | | | |
| | | Additional Voice Grade COCI in combination - per month | | | UNCVX | 1D1VG | 0.6497 | 5.91 | 4.26 | | | | | | | | |
| | | Wholesale to UNE, Switch-As-Is Charge | | | UNC1X | UNCCC | | 5.43 | 5.43 | | | | | | | | |
| | EXTENDED 4-WIRE 56 KBPS EXTENDED DIGITAL LOOP WITH DEDICATED DS1 INTEROFFICE TRANSPORT | | | | | | | | | | | | | | | | |
| | | First 4-Wire 56Kbps Digital Grade Loop in Combination - Zone 1 | | 1 | UNCDX | UDL56 | 30.99 | 94.21 | 45.09 | | | | | | | | |
| | | First 4-Wire 56Kbps Digital Grade Loop in Combination - Zone 2 | | 2 | UNCDX | UDL56 | 36.78 | 94.21 | 45.09 | | | | | | | | |
| | | First 4-Wire 56Kbps Digital Grade Loop in Combination - Zone 3 | | 3 | UNCDX | UDL56 | 38.92 | 94.21 | 45.09 | | | | | | | | |
| | | Interoffice Transport - Dedicated - DS1 combination - Per Mile Per Month | | | UNC1X | 1L5XX | 0.2652 | | | | | | | | | | |
| | | Interoffice Transport - Dedicated - DS1 - combination Facility Termination Per Month | | | UNC1X | U1TF1 | 70.47 | 143.58 | 103.88 | | | | | | | | |
| | | 1/0 Channel System in combination Per Month | | | UNC1X | MQ1 | 105.09 | 59.97 | 12.96 | | | | | | | | |
| | | OCU-DP COCI (data) per month (2.4-64kbs) | | | UNCDX | 1D1DD | 1.38 | 5.91 | 4.26 | | | | | | | | |
| | | Additional 4-Wire 56Kbps Digital Grade Loop in same DS1 Interoffice Transport Combination - Zone 1 | | 1 | UNCDX | UDL56 | 30.99 | 94.21 | 45.09 | | | | | | | | |
| | | Additional 4-Wire 56Kbps Digital Grade Loop in same DS1 Interoffice Transport Combination - Zone 2 | | 2 | UNCDX | UDL56 | 36.78 | 94.21 | 45.09 | | | | | | | | |
| | | Additional 4-Wire 56Kbps Digital Grade Loop in same DS1 Interoffice Transport Combination - Zone 3 | | 3 | UNCDX | UDL56 | 38.92 | 94.21 | 45.09 | | | | | | | | |
| | | Additional OCU-DP COCI (data) - in combination per month (2.4-64kbs) | | | UNCDX | 1D1DD | 1.38 | 5.91 | 4.26 | | | | | | | | |
| | | Wholesale to UNE, Switch-As-Is Charge | | | UNC1X | UNCCC | | 5.43 | 5.43 | | | | | | | | |
| | EXTENDED 4-WIRE 64 KBPS EXTENDED DIGITAL LOOP WITH DEDICATED DS1 INTEROFFICE TRANSPORT | | | | | | | | | | | | | | | | |
| | | First 4-Wire 64Kbps Digital Grade Loop in Combination - Zone 1 | | 1 | UNCDX | UDL64 | 30.99 | 94.21 | 45.09 | | | | | | | | |
| | | First 4-Wire 64Kbps Digital Grade Loop in Combination - Zone 2 | | 2 | UNCDX | UDL64 | 36.78 | 94.21 | 45.09 | | | | | | | | |
| | | First 4-Wire 64Kbps Digital Grade Loop in Combination - Zone 3 | | 3 | UNCDX | UDL64 | 38.92 | 94.21 | 45.09 | | | | | | | | |

| CATEGORY | | RATE ELEMENTS | Interim | Zone | BCS | USOC | RATES($) | | | | | Svc Order Submitted Elec per LSR | Svc Order Submitted Manually per LSR | Incremental Charge - Manual Svc Order vs. Electronic-1st | Incremental Charge - Manual Svc Order vs. Electronic-Add'l | Incremental Charge - Manual Svc Order vs. Electronic-Disc 1st | Incremental Charge - Manual Svc Order vs. Electronic-Disc Add'l |
|---|---|---|---|---|---|---|---|---|---|---|---|---|---|---|---|---|---|
| | | | | | | | Rec | Nonrecurring | | Nonrecurring Disconnect | | OSS Rates($) | | | | | |
| | | | | | | | | First | Add'l | First | Add'l | SOMEC | SOMAN | SOMAN | SOMAN | SOMAN | SOMAN |
| | | Interoffice Transport - Dedicated - DS1 combination - Per Mile Per Month | | | UNC1X | 1L5XX | 0.2652 | | | | | | | | | | |
| | | interoffice Transport - Dedicated - DS1 combination - Facility Termination Per Month | | | UNC1X | U1TF1 | 70.47 | 143.58 | 103.88 | | | | | | | | |
| | | 1/0 Channel System in combination Per Month | | | UNC1X | MQ1 | 105.09 | 59.97 | 12.96 | | | | | | | | |
| | | OCU-DP COCI (data) - in combination - per month (2.4-64kbs) | | | UNCDX | 1D1DD | 1.38 | 5.91 | 4.26 | | | | | | | | |
| | | Additional 4-Wire 64Kbps Digital Grade Loop in same DS1 Interoffice Transport Combination - Zone 1 | | 1 | UNCDX | UDL64 | 30.99 | 94.21 | 45.09 | | | | | | | | |
| | | Additional 4-Wire 64Kbps Digital Grade Loop in same DS1 Interoffice Transport Combination - Zone 2 | | 2 | UNCDX | UDL64 | 36.78 | 94.21 | 45.09 | | | | | | | | |
| | | Additional 4-Wire 64Kbps Digital Grade Loop in same DS1 Interoffice Transport Combination - Zone 3 | | 3 | UNCDX | UDL64 | 38.92 | 94.21 | 45.09 | | | | | | | | |
| | | Additional OCU-DP COCI (data) - in combination - per month (2.4-64kbs) | | | UNCDX | 1D1DD | 1.38 | 5.91 | 4.26 | | | | | | | | |
| | | Nonrecurring Currently Combined Network Elements Switch -As-Is Charge | | | UNC1X | UNCCC | | 5.43 | 5.43 | | | | | | | | |
| | **EXTENDED 4-WIRE DS1 DIGITAL EXTENDED LOOP WITH DEDICATED DS1 INTEROFFICE TRANSPORT** | | | | | | | | | | | | | | | | |
| | | 4-Wire DS1 Digital Loop in Combination - Zone 1 | | 1 | UNC1X | USLXX | 85.70 | 169.22 | 100.89 | | | | | | | | |
| | | 4-Wire DS1 Digital Loop in Combination - Zone 2 | | 2 | UNC1X | USLXX | 194.96 | 169.22 | 100.89 | | | | | | | | |
| | | 4-Wire DS1 Digital Loop in Combination - Zone 3 | | 3 | UNC1X | USLXX | 491.94 | 169.22 | 100.89 | | | | | | | | |
| | | Interoffice Transport - Dedicated - DS1 combination - Per Mile Per Month | | | UNC1X | 1L5XX | 0.2652 | | | | | | | | | | |
| | | Interoffice Transport - Dedicated - DS1 combination - Facility Termination Per Month | | | UNC1X | U1TF1 | 70.47 | 143.58 | 103.88 | | | | | | | | |
| | | Wholesale to UNE, Switch-As-Is Charge | | | UNC1X | UNCCC | | 5.43 | 5.43 | | | | | | | | |
| | **EXTENDED 4-WIRE DS1 DIGITAL EXTENDED LOOP WITH DEDICATED DS3 INTEROFFICE TRANSPORT** | | | | | | | | | | | | | | | | |
| | | First DS1Loop in Combination - Zone 1 | | 1 | UNC1X | USLXX | 85.70 | 169.22 | 100.89 | | | | | | | | |
| | | First DS1Loop in Combination - Zone 2 | | 2 | UNC1X | USLXX | 194.96 | 169.22 | 100.89 | | | | | | | | |
| | | First DS1Loop in Combination - Zone 3 | | 3 | UNC1X | USLXX | 491.94 | 169.22 | 100.89 | | | | | | | | |
| | | Interoffice Transport - Dedicated - DS3 combination - Per Mile Per Month | | | UNC3X | 1L5XX | 6.04 | | | | | | | | | | |
| | | Interoffice Transport - Dedicated - DS3 - Facility Termination per month | | | UNC3X | U1TF3 | 850.45 | 296.68 | 121.16 | | | | | | | | |
| | | 3/1Channel System in combination per month | | | UNC3X | MQ3 | 201.48 | 107.05 | 91.25 | | | | | | | | |
| | | DS1 COCI in combination per month | | | UNC1X | UC1D1 | 11.78 | 5.91 | 4.26 | | | | | | | | |
| | | Additional DS1Loop in DS3 Interoffice Transport Combination - Zone 1 | | 1 | UNC1X | USLXX | 85.70 | 169.22 | 100.89 | | | | | | | | |
| | | Additional DS1Loop in DS3 Interoffice Transport Combination - Zone 2 | | 2 | UNC1X | USLXX | 194.96 | 169.22 | 100.89 | | | | | | | | |
| | | Additional DS1Loop in DS3 Interoffice Transport Combination - Zone 3 | | 3 | UNC1X | USLXX | 491.94 | 169.22 | 100.89 | | | | | | | | |
| | | Additoinal DS1 COCI in combination per month | | | UNC1X | UC1D1 | 11.78 | 5.91 | 4.26 | | | | | | | | |
| | | Wholesale to UNE, Switch-As-Is Charge | | | UNC3X | UNCCC | | 5.43 | 5.43 | | | | | | | | |
| | **EXTENDED 2-WIRE VOICE GRADE EXTENDED LOOP/ 2 WIRE VOICE GRADE INTEROFFICE TRANSPORT** | | | | | | | | | | | | | | | | |
| | | 2-WireVG Loop in combination - Zone 1 | | 1 | UNCVX | UEAL2 | 14.93 | 94.21 | 45.09 | | | | | | | | |
| | | 2-WireVG Loop in combination - Zone 2 | | 2 | UNCVX | UEAL2 | 25.35 | 94.21 | 45.09 | | | | | | | | |
| | | 2-WireVG Loop in combination - Zone 3 | | 3 | UNCVX | UEAL2 | 50.46 | 94.21 | 45.09 | | | | | | | | |
| | | Interoffice Transport - 2-wire VG - Dedicated- Per Mile Per Month | | | UNCVX | 1L5XX | 0.013 | | | | | | | | | | |
| | | Interoffice Transport - 2-wire VG - Dedicated - Facility Termination per month | | | UNCVX | U1TV2 | 22.60 | 72.60 | 41.75 | | | | | | | | |
| | | Wholesale to UNE, Switch-As-Is Charge | | | UNCVX | UNCCC | | 5.43 | 5.43 | | | | | | | | |
| | **EXTENDED 4-WIRE VOICE GRADE EXTENDED LOOP/ 4 WIRE VOICE GRADE INTEROFFICE TRANSPORT** | | | | | | | | | | | | | | | | |
| | | 4-WireVG Loop in combination - Zone 1 | | 1 | UNCVX | UEAL4 | 30.81 | 94.21 | 45.09 | | | | | | | | |
| | | 4-WireVG Loop in combination - Zone 2 | | 2 | UNCVX | UEAL4 | 38.32 | 94.21 | 45.09 | | | | | | | | |
| | | 4-WireVG Loop in combination - Zone 3 | | 3 | UNCVX | UEAL4 | 60.39 | 94.21 | 45.09 | | | | | | | | |
| | | Interoffice Transport - 4-wire VG - Dedicated - Per Mile Per Month | | | UNCVX | 1L5XX | 0.013 | | | | | | | | | | |

| CATEGORY | RATE ELEMENTS | Interim | Zone | BCS | USOC | RATES($) | | | | | Svc Order Submitted Elec per LSR | Svc Order Submitted Manually per LSR | Incremental Charge - Manual Svc Order vs. Electronic-1st | Incremental Charge - Manual Svc Order vs. Electronic-Add'l | Incremental Charge - Manual Svc Order vs. Electronic-Disc 1st | Incremental Charge - Manual Svc Order vs. Electronic-Disc Add'l |
|---|---|---|---|---|---|---|---|---|---|---|---|---|---|---|---|---|
| | | | | | | Rec | Nonrecurring | | Nonrecurring Disconnect | | OSS Rates($) | | | | | |
| | | | | | | | First | Add'l | First | Add'l | SOMEC | SOMAN | SOMAN | SOMAN | SOMAN | SOMAN |
| | Interoffice Transport - 4-wire VG - Dedicated - Facility Termination per month | | | UNCVX | U1TV4 | 19.81 | 72.60 | 41.75 | | | | | | | | |
| | Wholesale to UNE, Switch-As-Is Charge | | | UNCVX | UNCCC | | 5.43 | 5.43 | | | | | | | | |
| | **EXTENDED DS3 DIGITAL EXTENDED LOOP WITH DEDICATED DS3 INTEROFFICE TRANSPORT** | | | | | | | | | | | | | | | |
| | DS3 Local Loop in combination - per mile per month | | | UNC3X | 1L5ND | 10.04 | | | | | | | | | | |
| | DS3 Local Loop in combination - Facility Termination per month | | | UNC3X | UE3PX | 362.34 | 188.45 | 125.51 | | | | | | | | |
| | Interoffice Transport - Dedicated - DS3 - Per Mile per month | | | UNC3X | 1L5XX | 6.04 | | | | | | | | | | |
| | Interoffice Transport - Dedicated - DS3 combination - Facility Termination per month | | | UNC3X | U1TF3 | 850.45 | 296.68 | 121.16 | | | | | | | | |
| | Wholesale to UNE, Switch-As-Is Charge | | | UNC3X | UNCCC | | 5.43 | 5.43 | | | | | | | | |
| | **EXTENDED STS-1 DIGITAL EXTENDED LOOP WITH DEDICATED STS-1 INTEROFFICE TRANSPORT** | | | | | | | | | | | | | | | |
| | STS-1 Local Lolp in combination - per mile per month | | | UNCSX | 1L5ND | 10.04 | | | | | | | | | | |
| | STS-1 Local Loop in combination - Facility Termination per month | | | UNCSX | UDLS1 | 374.56 | 188.45 | 125.51 | | | | | | | | |
| | Interoffice Transport - Dedicated - STS-1 combination - per mile per month | | | UNCSX | 1L5XX | 6.04 | | | | | | | | | | |
| | Interoffice Transport - Dedicated - STS-1 combination - Facility Termination per month | | | UNCSX | U1TFS | 830.19 | 296.68 | 121.16 | | | | | | | | |
| | Wholesale to UNE, Switch-As-Is Charge | | | UNCSX | UNCCC | | 5.43 | 5.43 | | | | | | | | |
| | **EXTENDED 2-WIRE ISDN EXTENDED LOOP WITH DS1 INTEROFFICE TRANSPORT** | | | | | | | | | | | | | | | |
| | First 2-Wire ISDN Loop in Combination - Zone 1 | | 1 | UNCNX | U1L2X | 22.09 | 94.21 | 45.09 | | | | | | | | |
| | First 2-Wire ISDN Loop in Combination - Zone 2 | | 2 | UNCNX | U1L2X | 35.28 | 94.21 | 45.09 | | | | | | | | |
| | First 2-Wire ISDN Loop in Combination - Zone 3 | | 3 | UNCNX | U1L2X | 65.18 | 94.21 | 45.09 | | | | | | | | |
| | Interoffice Transport - Dedicated - DS1 combination - per mile per month | | | UNC1X | 1L5XX | 0.2652 | | | | | | | | | | |
| | Interoffice Transport - Dedicated - DS1 combination - Facility Termination per month | | | UNC1X | U1TF1 | 70.47 | 143.58 | 103.88 | | | | | | | | |
| | 1/0 Channel System in combination - per month | | | UNC1X | MQ1 | 105.09 | 59.97 | 12.96 | | | | | | | | |
| | 2-wire ISDN COCI (BRITE) - in combination - per month | | | UNCNX | UC1CA | 2.96 | 5.91 | 4.26 | | | | | | | | |
| | Additional 2-wire ISDN Loop in same DS1Interoffice Transport Combination - Zone 1 | | 1 | UNCNX | U1L2X | 22.09 | 94.21 | 45.09 | | | | | | | | |
| | Additional 2-wire ISDN Loop in same DS1Interoffice Transport Combination - Zone 2 | | 2 | UNCNX | U1L2X | 35.28 | 94.21 | 45.09 | | | | | | | | |
| | Additional 2-wire ISDN Loop in same DS1Interoffice Transport Combination - Zone 3 | | 3 | UNCNX | U1L2X | 65.18 | 94.21 | 45.09 | | | | | | | | |
| | Additional 2-wire ISDN COCI (BRITE) - in combination- per month | | | UNCNX | UC1CA | 2.96 | 5.91 | 4.26 | | | | | | | | |
| | Wholesale to UNE, Switch-As-Is Charge | | | UNC1X | UNCCC | | 5.43 | 5.43 | | | | | | | | |
| | **EXTENDED 4-WIRE DS1 DIGITAL EXTENDED LOOP WITH DEDICATED STS-1 INTEROFFICE TRANSPORT** | | | | | | | | | | | | | | | |
| | First DS1 Loop Combination - Zone 1 | | 1 | UNC1X | USLXX | 85.70 | 169.22 | 100.89 | | | | | | | | |
| | First DS1 Loop Combination - Zone 2 | | 2 | UNC1X | USLXX | 194.96 | 169.22 | 100.89 | | | | | | | | |
| | First DS1 Loop Combination - Zone 3 | | 3 | UNC1X | USLXX | 491.94 | 169.22 | 100.89 | | | | | | | | |
| | Interoffice Transport - Dedicated - STS-1 combination - Per Mile Per Month | | | UNCSX | 1L5XX | 6.04 | | | | | | | | | | |
| | Interoffice Transport - Dedicated - STS-1 combination - Facility Termination per month | | | UNCSX | U1TFS | 830.19 | 296.68 | 121.16 | | | | | | | | |
| | 3/1 Channel System in combination per month | | | UNCSX | MQ3 | 201.48 | 107.05 | 91.25 | | | | | | | | |
| | DS1 COCI in combination per month | | | UNC1X | UC1D1 | 11.78 | 5.91 | 4.26 | | | | | | | | |
| | Additional DS1Loop in the same STS-1 Interoffice Transport Combination - Zone 1 | | 1 | UNC1X | USLXX | 85.70 | 169.22 | 100.89 | | | | | | | | |
| | Additional DS1Loop in the same STS-1 Interoffice Transport Combination - Zone 2 | | 2 | UNC1X | USLXX | 194.96 | 169.22 | 100.89 | | | | | | | | |
| | Additional DS1Loop in the same STS-1 Interoffice Transport Combination - Zone 3 | | 3 | UNC1X | USLXX | 491.94 | 169.22 | 100.89 | | | | | | | | |
| | DS1 COCI in combination per month | | | UNC1X | UC1D1 | 11.78 | 5.91 | 4.26 | | | | | | | | |
| | Wholesale to UNE, Switch-As-Is Charge | | | UNCSX | UNCCC | | 5.43 | 5.43 | | | | | | | | |
| | **EXTENDED 4-WIRE 56 KBPS DIGITAL EXTENDED LOOP WITH 56 KBPS INTEROFFICE TRANSPORT** | | | | | | | | | | | | | | | |
| | 4-wire 56 kbps Local Loop in combination - Zone 1 | | 1 | UNCDX | UDL56 | 30.99 | 94.21 | 45.09 | | | | | | | | |

| CATEGORY | RATE ELEMENTS | Interim | Zone | BCS | USOC | RATES($) | | | | | Svc Order Submitted Elec per LSR | Svc Order Submitted Manually per LSR | Incremental Charge - Manual Svc Order vs. Electronic-1st | Incremental Charge - Manual Svc Order vs. Electronic-Add'l | Incremental Charge - Manual Svc Order vs. Electronic-Disc 1st | Incremental Charge - Manual Svc Order vs. Electronic-Disc Add'l |
|---|---|---|---|---|---|---|---|---|---|---|---|---|---|---|---|---|
| | | | | | | Rec | Nonrecurring | | Nonrecurring Disconnect | | OSS Rates($) | | | | | |
| | | | | | | | First | Add'l | First | Add'l | SOMEC | SOMAN | SOMAN | SOMAN | SOMAN | SOMAN |
| | 4-wire 56 kbps Local Loop in combination - Zone 2 | | 2 | UNCDX | UDL56 | 36.78 | 94.21 | 45.09 | | | | | | | | |
| | 4-wire 56 kbps Local Loop in combination - Zone 3 | | 3 | UNCDX | UDL56 | 38.92 | 94.21 | 45.09 | | | | | | | | |
| | Interoffice Transport - Dedicated - 4-wire 56 kbps combination - Per Mile per month | | | UNCDX | 1L5XX | 0.013 | | | | | | | | | | |
| | Interoffice Transport - Dedicated - 4-wire 56 kbps combination - Facility Termination per month | | | UNCDX | U1TD5 | 15.61 | 72.60 | 41.75 | | | | | | | | |
| | Wholesale to UNE, Switch-As-Is Charge | | | UNCDX | UNCCC | | 5.43 | 5.43 | | | | | | | | |
| | **EXTENDED 4-WIRE 64 KBPS DIGITAL EXTENDED LOOP WITH 64 KBPS INTEROFFICE TRANSPORT** | | | | | | | | | | | | | | | |
| | 4-wire 64 kbps Lcoal Loop in Combination - Zone 1 | | 1 | UNCDX | UDL64 | 30.99 | 94.21 | 45.09 | | | | | | | | |
| | 4-wire 64 kbps Lcoal Loop in Combination - Zone 2 | | 2 | UNCDX | UDL64 | 36.78 | 94.21 | 45.09 | | | | | | | | |
| | 4-wire 64 kbps Lcoal Loop in Combination - Zone 3 | | 3 | UNCDX | UDL64 | 38.92 | 94.21 | 45.09 | | | | | | | | |
| | Interoffice Transport - Dedicated - 4-wire 64 kbps combination - Per Mile per month | | | UNCDX | 1L5XX | 0.013 | | | | | | | | | | |
| | Interoffice Transport - Dedicated - 4-wire 64 kbps combination - Facility Termination per month | | | UNCDX | U1TD6 | 15.61 | 72.60 | 41.75 | | | | | | | | |
| | Wholesale to UNE, Switch-As-Is Charge | | | UNCDX | UNCCC | | 5.43 | 5.43 | | | | | | | | |
| | **EXTENDED 2-WIRE VOICE GRADE LOOP WITH DS1 INTEROFFICE TRANSPORT w/ 3/1 MUX** | | | | | | | | | | | | | | | |
| | First 2-wire VG Loop (SL2) in Combination - Zone 1 | | 1 | UNCVX | UEAL2 | 14.93 | 94.21 | 45.09 | | | | | | | | |
| | First 2-wire VG Loop (SL2) in Combination - Zone 2 | | 2 | UNCVX | UEAL2 | 25.35 | 94.21 | 45.09 | | | | | | | | |
| | First 2-wire VG Loop (SL2) in Combination - Zone 3 | | 3 | UNCVX | UEAL2 | 50.46 | 94.21 | 45.09 | | | | | | | | |
| | First Interoffice Transport - Dedicated - DS1 combination - Per Mile | | | UNC1X | 1L5XX | 0.2652 | | | | | | | | | | |
| | First Interoffice Transport - Dedicated - DS1 combination - Facility Termination per month | | | UNC1X | U1TF1 | 70.47 | 143.58 | 103.88 | | | | | | | | |
| | Per each DS1 Channelization System Per Month | | | UNC1X | MQ1 | 105.09 | 59.97 | 12.96 | | | | | | | | |
| | Per each Voice Grade COCI - Per Month per month | | | UNCVX | 1D1VG | 0.6497 | 5.91 | 4.26 | | | | | | | | |
| | 3/1 Channel System in combination per month | | | UNC3X | MQ3 | 201.48 | 107.05 | 91.25 | | | | | | | | |
| | Per each DS1 COCI in combination per month | | | UNC1X | UC1D1 | 11.78 | 5.91 | 4.26 | | | | | | | | |
| | Each Additional 2-Wire VG Loop(SL 2) in the same DS1 Interoffice Transport Combination - Zone 1 | | 1 | UNCVX | UEAL2 | 14.93 | 94.21 | 45.09 | | | | | | | | |
| | Each Additional 2-Wire VG Loop(SL2) in the same DS1 Interoffice Transport Combination - Zone 2 | | 2 | UNCVX | UEAL2 | 25.35 | 94.21 | 45.09 | | | | | | | | |
| | Each Additional 2-Wire VG Loop(SL2) in the same DS1 Interoffice Transport Combination - Zone 3 | | 3 | UNCVX | UEAL2 | 50.46 | 94.21 | 45.09 | | | | | | | | |
| | Each Additional Voice Grade COCI in combination - per month | | | UNCVX | 1D1VG | 0.6497 | 5.91 | 4.26 | | | | | | | | |
| | Each Additional DS1 Interoffice Channel per mile in same 3/1 Channel System per month | | | UNC1X | 1L5XX | 0.2652 | | | | | | | | | | |
| | Each Additional DS1 Interoffice Channel Facility Termination in same 3/1 Channel System per month | | | UNC1X | U1TF1 | 70.47 | 143.58 | 103.88 | | | | | | | | |
| | Each Additional DS1 COCI combination per month | | | UNC1X | UC1D1 | 11.78 | 5.91 | 4.26 | | | | | | | | |
| | Wholesale to UNE, Switch-As-Is Charge | | | UNC1X | UNCCC | | 5.43 | 5.43 | | | | | | | | |
| | **EXTENDED 4-WIRE VOICE GRADE LOOP WITH DEDICATED DS1 INTEROFFICE TRANSPORT w/ 3/1 MUX** | | | | | | | | | | | | | | | |
| | First 4-Wire Analog Voice Grade Local Loop in Combination - Zone 1 | | 1 | UNCVX | UEAL4 | 30.81 | 94.21 | 45.09 | | | | | | | | |
| | First 4-Wire Analog Voice Grade Local Loop in Combination - Zone 2 | | 2 | UNCVX | UEAL4 | 38.32 | 94.21 | 45.09 | | | | | | | | |
| | First 4-Wire Analog Voice Grade Local Loop in Combination - Zone 3 | | 3 | UNCVX | UEAL4 | 60.39 | 94.21 | 45.09 | | | | | | | | |
| | First Interoffice Transport - Dedicated - DS1 combination - Per Mile Per Month | | | UNC1X | 1L5XX | 0.2652 | | | | | | | | | | |
| | First Interoffice Transport - Dedicated - DS1 - Facility Termination Per Month | | | UNC1X | U1TF1 | 70.47 | 143.58 | 103.88 | | | | | | | | |
| | Per each 1/0 Channel System in combination Per Month | | | UNC1X | MQ1 | 105.09 | 59.97 | 12.96 | | | | | | | | |
| | Per each Voice Grade COCI in combination - per month | | | UNCVX | 1D1VG | 0.6497 | 5.91 | 4.26 | | | | | | | | |
| | 3/1 Channel System in combination per month | | | UNC3X | MQ3 | 201.48 | 107.05 | 91.25 | | | | | | | | |
| | Per each DS1 COCI in combination per month | | | UNC1X | UC1D1 | 11.78 | 5.91 | 4.26 | | | | | | | | |
| | Additional 4-Wire Analog Voice Grade Loop in same DS1 Interoffice Transport Combination - Zone 1 | | 1 | UNCVX | UEAL4 | 30.81 | 94.21 | 45.09 | | | | | | | | |

| CATEGORY | RATE ELEMENTS | Interim | Zone | BCS | USOC | RATES($) | | | | | Svc Order Submitted Elec per LSR | Svc Order Submitted Manually per LSR | Incremental Charge - Manual Svc Order vs. Electronic-1st | Incremental Charge - Manual Svc Order vs. Electronic-Add'l | Incremental Charge - Manual Svc Order vs. Electronic-Disc 1st | Incremental Charge - Manual Svc Order vs. Electronic-Disc Add'l |
|---|---|---|---|---|---|---|---|---|---|---|---|---|---|---|---|---|
| | | | | | | Rec | Nonrecurring | | Nonrecurring Disconnect | | OSS Rates($) | | | | | |
| | | | | | | | First | Add'l | First | Add'l | SOMEC | SOMAN | SOMAN | SOMAN | SOMAN | SOMAN |
| | Additional 4-Wire Analog Voice Grade Loop in same DS1 Interoffice Transport Combination - Zone 2 | | 2 | UNCVX | UEAL4 | 38.32 | 94.21 | 45.09 | | | | | | | | |
| | Additional 4-Wire Analog Voice Grade Loop in same DS1 Interoffice Transport Combination - Zone 3 | | 3 | UNCVX | UEAL4 | 60.39 | 94.21 | 45.09 | | | | | | | | |
| | Each Additional DS1 Interoffice Channel per mile in same 3/1 Channel System per month | | | UNC1X | 1L5XX | 0.2652 | | | | | | | | | | |
| | Each Additional DS1 Interoffice Channel Facility Termination in same 3/1 Channel System per month | | | UNC1X | U1TF1 | 70.47 | 143.58 | 103.88 | | | | | | | | |
| | Additional Voice Grade COCI - in combination - per month | | | UNCVX | 1D1VG | 0.6497 | 5.91 | 4.26 | | | | | | | | |
| | Wholesale to UNE, Switch-As-Is Charge | | | UNC1X | UNCCC | | 5.43 | 5.43 | | | | | | | | |
| | **EXTENDED 4-WIRE 56 KBPS DIGITAL LOOP WITH DEDICATED DS1 INTEROFFICE TRANSPORT w/ 3/1 MUX** | | | | | | | | | | | | | | | |
| | First 4-Wire 56Kbps Digital Grade Local Loop in Combination - Zone 1 | | 1 | UNCDX | UDL56 | 30.99 | 94.21 | 45.09 | | | | | | | | |
| | First 4-Wire 56Kbps Digital Grade Local Loop in Combination - Zone 2 | | 2 | UNCDX | UDL56 | 36.78 | 94.21 | 45.09 | | | | | | | | |
| | First 4-Wire 56Kbps Digital Grade Local Loop in Combination - Zone 3 | | 3 | UNCDX | UDL56 | 38.92 | 94.21 | 45.09 | | | | | | | | |
| | First Interoffice Transport - Dedicated - DS1 combination - Per Mile Per Month | | | UNC1X | 1L5XX | 0.2652 | | | | | | | | | | |
| | First Interoffice Transport - Dedicated - DS1 - combination Facility Termination Per Month | | | UNC1X | U1TF1 | 70.47 | 143.58 | 103.88 | | | | | | | | |
| | Per each 1/0 Channel System in combination Per Month | | | UNC1X | MQ1 | 105.09 | 59.97 | 12.96 | | | | | | | | |
| | Per each OCU-DP COCI (data) COCI per month (2.4-64kbs) | | | UNCDX | 1D1DD | 1.38 | 5.91 | 4.26 | | | | | | | | |
| | 3/1 Channel System in combination per month | | | UNC3X | MQ3 | 201.48 | 107.05 | 91.25 | | | | | | | | |
| | Per each DS1 COCI in combination per month | | | UNC1X | UC1D1 | 11.78 | 5.91 | 4.26 | | | | | | | | |
| | Additional 4-Wire 56Kbps Digital Grade Loop in same DS1 Interoffice Transport Combination - Zone 1 | | 1 | UNCDX | UDL56 | 30.99 | 94.21 | 45.09 | | | | | | | | |
| | Additional 4-Wire 56Kbps Digital Grade Loop in same DS1 Interoffice Transport Combination - Zone 2 | | 2 | UNCDX | UDL56 | 36.78 | 94.21 | 45.09 | | | | | | | | |
| | Additional 4-Wire 56Kbps Digital Grade Loop in same DS1 Interoffice Transport Combination - Zone 3 | | 3 | UNCDX | UDL56 | 38.92 | 94.21 | 45.09 | | | | | | | | |
| | OCU-DP COCI (data) COCI in combination per month (2.4-64kbs) | | | UNCDX | 1D1DD | 1.38 | 5.91 | 4.26 | | | | | | | | |
| | Each Additional DS1 Interoffice Channel per mile in same 3/1 Channel System per month | | | UNC1X | 1L5XX | 0.2652 | | | | | | | | | | |
| | Each Additional DS1 Interoffice Channel Facility Termination in same 3/1 Channel System per month | | | UNC1X | U1TF1 | 70.47 | 143.58 | 103.88 | | | | | | | | |
| | Each Additional DS1 COCI in the same 3/1 channel system combination per month | | | UNC1X | UC1D1 | 11.78 | 5.91 | 4.26 | | | | | | | | |
| | Wholesale to UNE, Switch-As-Is Charge | | | UNC1X | UNCCC | | 5.43 | 5.43 | | | | | | | | |
| | **EXTENDED 4-WIRE 64 KBPS DIGITAL LOOP WITH DEDICATED DS1 INTEROFFICE TRANSPORT w/ 3/1 MUX** | | | | | | | | | | | | | | | |
| | First 4-Wire 64Kbps Digital Grade Loop in a DS1 Interoffice Transport Combination - Zone 1 | | 1 | UNCDX | UDL64 | 30.99 | 94.21 | 45.09 | | | | | | | | |
| | First 4-Wire 64Kbps Digital Grade Loop in a DS1 Interoffice Transport Combination - Zone 2 | | 2 | UNCDX | UDL64 | 36.78 | 94.21 | 45.09 | | | | | | | | |
| | First 4-Wire 64Kbps Digital Grade Loop in a DS1 Interoffice Transport Combination - Zone 3 | | 3 | UNCDX | UDL64 | 38.92 | 94.21 | 45.09 | | | | | | | | |
| | First Interoffice Transport - Dedicated - DS1 combination - Per Mile Per Month | | | UNC1X | 1L5XX | 0.2652 | | | | | | | | | | |
| | First Interoffice Transport - Dedicated - DS1 combination - Facility Termination Per Month | | | UNC1X | U1TF1 | 70.47 | 143.58 | 103.88 | | | | | | | | |
| | Per each Channel System 1/0 in combination Per Month | | | UNC1X | MQ1 | 105.09 | 59.97 | 12.96 | | | | | | | | |
| | Per each OCU-DP COCI (data) in combination - per month (2.4-64kbs) | | | UNCDX | 1D1DD | 1.38 | 5.91 | 4.26 | | | | | | | | |
| | 3/1 Channel System in combination per month | | | UNC3X | MQ3 | 201.48 | 107.05 | 91.25 | | | | | | | | |
| | Per each DS1 COCI in combination per month | | | UNC1X | UC1D1 | 11.78 | 5.91 | 4.26 | | | | | | | | |
| | Additional 4-Wire 64Kbps Digital Grade Loop in same DS1 Interoffice Transport Combination - Zone 1 | | 1 | UNCDX | UDL64 | 30.99 | 94.21 | 45.09 | | | | | | | | |

| CATEGORY | | RATE ELEMENTS | Interim | Zone | BCS | USOC | RATES($) | | | | | Svc Order Submitted Elec per LSR | Svc Order Submitted Manually per LSR | Incremental Charge - Manual Svc Order vs. Electronic-1st | Incremental Charge - Manual Svc Order vs. Electronic-Add'l | Incremental Charge - Manual Svc Order vs. Electronic-Disc 1st | Incremental Charge - Manual Svc Order vs. Electronic-Disc Add'l |
|---|---|---|---|---|---|---|---|---|---|---|---|---|---|---|---|---|---|
| | | | | | | | Rec | Nonrecurring | | Nonrecurring Disconnect | | OSS Rates($) | | | | | |
| | | | | | | | | First | Add'l | First | Add'l | SOMEC | SOMAN | SOMAN | SOMAN | SOMAN | SOMAN |
| | | Additional 4-Wire 64Kbps Digital Grade Loop in same DS1 Interoffice Transport Combination - Zone 2 | | 2 | UNCDX | UDL64 | 36.78 | 94.21 | 45.09 | | | | | | | | |
| | | Additional 4-Wire 64Kbps Digital Grade Loop in same DS1 Interoffice Transport Combination - Zone 3 | | 3 | UNCDX | UDL64 | 38.92 | 94.21 | 45.09 | | | | | | | | |
| | | Additional OCU-DP COCI (data) - DS1 to DS0 Channel System combination - per month (2.4-64kbs) | | | UNCDX | 1D1DD | 1.38 | 5.91 | 4.26 | | | | | | | | |
| | | Each Additional DS1 Interoffice Channel per mile in same 3/1 Channel System per month | | | UNC1X | 1L5XX | 0.2652 | | | | | | | | | | |
| | | Each Additional DS1 Interoffice Channel Facility Termination in same 3/1 Channel System per month | | | UNC1X | U1TF1 | 70.47 | 143.58 | 103.88 | | | | | | | | |
| | | Each Additional DS1 COCI in the same 3/1 channel system combination per month | | | UNC1X | UC1D1 | 11.78 | 5.91 | 4.26 | | | | | | | | |
| | | Wholesale to UNE, Switch-As-Is Charge | | | UNC1X | UNCCC | | 5.43 | 5.43 | | | | | | | | |
| | **EXTENDED 2-WIRE ISDN LOOP WITH DS1 INTEROFFICE TRANSPORT w/ 3/1 MUX** | | | | | | | | | | | | | | | | |
| | | First 2-Wire ISDN Loop in a DS1 Interoffice Combination Transport - Zone 1 | | 1 | UNCNX | U1L2X | 22.09 | 94.21 | 45.09 | | | | | | | | |
| | | First 2-Wire ISDN Loop in a DS1 Interoffice Combination Transport - Zone 2 | | 2 | UNCNX | U1L2X | 35.28 | 94.21 | 45.09 | | | | | | | | |
| | | First 2-Wire ISDN Loop in a DS1 Interoffice Combination Transport - Zone 3 | | 3 | UNCNX | U1L2X | 65.18 | 94.21 | 45.09 | | | | | | | | |
| | | First Interoffice Transport - Dedicated - DS1 combination - Per Mile per month | | | UNC1X | 1L5XX | 0.2652 | | | | | | | | | | |
| | | First Interoffice Transport - Dedicated - DS1 combination - Facility Termination per month | | | UNC1X | U1TF1 | 70.47 | 143.58 | 103.88 | | | | | | | | |
| | | Per each Channel System 1/0 in combination - per month | | | UNC1X | MQ1 | 105.09 | 59.97 | 12.96 | | | | | | | | |
| | | Per each 2-wire ISDN COCI (BRITE) in combination - per month | | | UNCNX | UC1CA | 2.96 | 5.91 | 4.26 | | | | | | | | |
| | | 3/1 Channel System in combination per month | | | UNC3X | MQ3 | 201.48 | 107.05 | 91.25 | | | | | | | | |
| | | Per each DS1 COCI in combination per month | | | UNC1X | UC1D1 | 11.78 | 5.91 | 4.26 | | | | | | | | |
| | | Additional 2-wire ISDN Loop in same DS1Interoffice Transport Combination - Zone 1 | | 1 | UNCNX | U1L2X | 22.09 | 94.21 | 45.09 | | | | | | | | |
| | | Additional 2-wire ISDN Loop in same DS1Interoffice Transport Combination - Zone 2 | | 2 | UNCNX | U1L2X | 35.28 | 94.21 | 45.09 | | | | | | | | |
| | | Additional 2-wire ISDN Loop in same DS1Interoffice Transport Combination - Zone 3 | | 3 | UNCNX | U1L2X | 65.18 | 94.21 | 45.09 | | | | | | | | |
| | | Additional 2-wire ISDN COCI (BRITE) in same 1/0 channel system combination- per month | | | UNCNX | UC1CA | 2.96 | 5.91 | 4.26 | | | | | | | | |
| | | Each Additional DS1 Interoffice Channel per mile in same 3/1 Channel System per month | | | UNC1X | 1L5XX | 0.2652 | | | | | | | | | | |
| | | Each Additional DS1 Interoffice Channel Facility Termination in same 3/1 Channel System per month | | | UNC1X | U1TF1 | 70.47 | 143.58 | 103.88 | | | | | | | | |
| | | Each Additional DS1 COCI in the same 3/1 channel system combination per month | | | UNC1X | UC1D1 | 11.78 | 5.91 | 4.26 | | | | | | | | |
| | | Wholesale to UNE, Switch-As-Is Charge | | | UNC1X | UNCCC | | 5.43 | 5.43 | | | | | | | | |
| | **EXTENDED 4-WIRE DS1 LOOP WITH DEDICATED DS1 INTEROFFICE TRANSPORT w/ 3/1 MUX** | | | | | | | | | | | | | | | | |
| | | First 4-wire DS1 Digital Lcoal Loop in Combination - Zone 1 | | 1 | UNC1X | USLXX | 85.70 | 169.22 | 100.89 | | | | | | | | |
| | | First 4-wire DS1 Digital Lcoal Loop in Combination - Zone 2 | | 2 | UNC1X | USLXX | 194.96 | 169.22 | 100.89 | | | | | | | | |
| | | First 4-wire DS1 Digital Lcoal Loop in Combination - Zone 3 | | 3 | UNC1X | USLXX | 491.94 | 169.22 | 100.89 | | | | | | | | |
| | | First Interoffice Transport - Dedicated - DS1 combination - Per Mile Per Month | | | UNC1X | 1L5XX | 0.2652 | | | | | | | | | | |
| | | First Interoffice Transport - Dedicated - DS1 combination - Facility Termination Per Month | | | UNC1X | U1TF1 | 70.47 | 143.58 | 103.88 | | | | | | | | |
| | | 3/1 Channel System in combination per month | | | UNC3X | MQ3 | 201.48 | 107.05 | 91.25 | | | | | | | | |
| | | Per each DS1 COCI combination per month | | | UNC1X | UC1D1 | 11.78 | 5.91 | 4.26 | | | | | | | | |
| | | Each Additional DS1 Interoffice Channel per mile in same 3/1 Channel System per month | | | UNC1X | 1L5XX | 0.2652 | | | | | | | | | | |
| | | Each Additional DS1 Interoffice Channel Facility Termination in same 3/1 Channel System per month | | | UNC1X | U1TF1 | 70.47 | 143.58 | 103.88 | | | | | | | | |

| UNBUNDLED NETWORK ELEMENTS - Louisiana | | | | | | | | | | | | | | Attachment: 2 Exh. A | | | |
|---|---|---|---|---|---|---|---|---|---|---|---|---|---|---|---|---|---|
| CATEGORY | RATE ELEMENTS | Interim | Zone | BCS | USOC | RATES($) | | | | | Svc Order Submitted Elec per LSR | Svc Order Submitted Manually per LSR | Incremental Charge - Manual Svc Order vs. Electronic-1st | Incremental Charge - Manual Svc Order vs. Electronic-Add'l | Incremental Charge - Manual Svc Order vs. Electronic-Disc 1st | Incremental Charge - Manual Svc Order vs. Electronic-Disc Add'l |
| | | | | | | Rec | Nonrecurring | | Nonrecurring Disconnect | | OSS Rates($) | | | | | |
| | | | | | | | First | Add'l | First | Add'l | SOMEC | SOMAN | SOMAN | SOMAN | SOMAN | SOMAN |
| | Each Additional DS1 COCI in the same 3/1 channel system combination per month | | | UNC1X | UC1D1 | 11.78 | 5.91 | 4.26 | | | | | | | | |
| | Additional 4-Wire DS1 Digital Local Loop in Combination - Zone 1 | | 1 | UNC1X | USLXX | 85.70 | 169.22 | 100.89 | | | | | | | | |
| | Additional 4-Wire DS1 Digital Local Loop in Combination - Zone 2 | | 2 | UNC1X | USLXX | 194.96 | 169.22 | 100.89 | | | | | | | | |
| | Additional 4-Wire DS1 Digital Local Loop in Combination - Zone 3 | | 3 | UNC1X | USLXX | 491.94 | 169.22 | 100.89 | | | | | | | | |
| | Wholesale to UNE, Switch-As-Is Charge | | | UNC1X | UNCCC | | 5.43 | 5.43 | | | | | | | | |
| | **EXTENDED 4-WIRE 56 KBPS DIGITAL EXTENDED LOOP WITH DS0 INTEROFFICE TRANSPORT** | | | | | | | | | | | | | | | |
| | First 4-wire 56 kbps Local Loop in combination - Zone 1 | | 1 | UNCDX | UDL56 | 30.99 | 94.21 | 45.09 | | | | | | | | |
| | First 4-wire 56 kbps Local Loop in combination - Zone 2 | | 2 | UNCDX | UDL56 | 36.78 | 94.21 | 45.09 | | | | | | | | |
| | First 4-wire 56 kbps Local Loop in combination - Zone 3 | | 3 | UNCDX | UDL56 | 38.92 | 94.21 | 45.09 | | | | | | | | |
| | First 4-wiree 56 kbps Interoffice Transport - Dedicated - Per Mile per month | | | UNCDX | 1L5XX | 0.013 | | | | | | | | | | |
| | First 4-wire 56 kbps Interoffice Transport - Dedicated - Facility Termination per month | | | UNCDX | U1TD5 | 15.61 | 72.60 | 41.75 | | | | | | | | |
| | Wholesale to UNE, Switch-As-Is Charge | | | UNCDX | UNCCC | | 5.43 | 5.43 | | | | | | | | |
| | **EXTENDED 4-WIRE 64 KBPS DIGITAL EXTENDED LOOP WITH DS0 INTEROFFICE TRANSPORT** | | | | | | | | | | | | | | | |
| | First 4-wire 64 kbps Local Loop in combination - Zone 1 | | 1 | UNCDX | UDL64 | 30.99 | 94.21 | 45.09 | | | | | | | | |
| | First 4-wire 64 kbps Local Loop in combination - Zone 2 | | 2 | UNCDX | UDL64 | 36.78 | 94.21 | 45.09 | | | | | | | | |
| | First 4-wire 64 kbps Local Loop in combination - Zone 3 | | 3 | UNCDX | UDL64 | 38.92 | 94.21 | 45.09 | | | | | | | | |
| | First l4-wire 65 kbps Interoffice Transport - Dedicated - Per Mile per month | | | UNCDX | 1L5XX | 0.013 | | | | | | | | | | |
| | First 4-wire 64 kbps Interoffice Transport - Dedicated - Facility Termination per month | | | UNCDX | U1TD6 | 15.61 | 72.60 | 41.75 | | | | | | | | |
| | Wholesale to UNE, Switch-As-Is Charge | | | UNCDX | UNCCC | | 5.43 | 5.43 | | | | | | | | |
| **ADDITIONAL NETWORK ELEMENTS** | | | | | | | | | | | | | | | | |
| | **When used as a part of a currently combined facility, the non-recurrng charges do not apply, but a Switch As Is charge does apply.** | | | | | | | | | | | | | | | |
| | **When used as ordinarily combined network elements in All States, the non-recurring charges apply and the Switch As Is Charge does not.** | | | | | | | | | | | | | | | |
| | **Nonrecurring Currently Combined Network Elements "Switch As Is" Charge** | | | | | | | | | | | | | | | |
| | Wholesale to UNE, Switch-As-Is Conversion Charge, 2/4-wire VG | | | UNCVX | UNCCC | | 5.43 | 5.43 | | | | | | | | |
| | Wholesale to UNE, Switch-As-Is Conversion Charge, 4-wire VG | | | UNCDX | UNCCC | | 5.43 | 5.43 | | | | | | | | |
| | Wholesale to UNE, Switch-As-Is Conversion Charge, DS1 | | | UNC1X | UNCCC | | 5.43 | 5.43 | | | | | | | | |
| | Wholesale to UNE, Switch-As-Is Conversion Charge, DS3 | | | UNC3X | UNCCC | | 5.43 | 5.43 | | | | | | | | |
| | Wholesale to UNE, Switch-As-Is Conversion Charge, STS-1 | | | UNCSX | UNCCC | | 5.43 | 5.43 | | | | | | | | |
| | **Optional Features & Functions:** | | | | | | | | | | | | | | | |
| | Clear Channel Capability Extended Frame Option - per DS1 | I | | U1TD1, ULDD1,UNC1X | CCOEF | | 0.00 | 0.00 | 0.00 | 0.00 | | | | | | |
| | Clear Channel Capability Super FrameOption - per DS1 | I | | U1TD1, ULDD1,UNC1X | CCOSF | | 0.00 | 0.00 | 0.00 | 0.00 | | | | | | |
| | Clear Channel Capability (SF/ESF) Option - Subsequent Activity - per DS1 | I | | ULDD1, U1TD1, UNC1X, USL | NRCCC | | 184.65 | 23.79 | 1.97 | 0.77 | | | | | | |
| | C-bit Parity Option - Subsequent Activity - per DS3 | i | | U1TD3, ULDD3, UE3, UNC3X | NRCC3 | | 218.78 | 7.66 | 0.7263 | 0.00 | | | | | | |
| | **MULTIPLEXER Interfaces** | | | | | | | | | | | | | | | |
| | DS1 to DS0 Channel System per month | | | UNC1X | MQ1 | 105.09 | 59.97 | 12.96 | | | | | | | | |
| | Wholesale to UNE, Switch-As-Is Conversion Charge, 1/0 Channel System | | | UNC1X | UNCCC | | 5.43 | 5.43 | | | | | | | | |
| | OCU-DP COCI (data) - DS1 to DS0 Channel System - per month (2.4-64kbs) used for a Local Loop | | | UDL | 1D1DD | 1.38 | 6.39 | 4.58 | | | | | | | | |
| | OCU-DP COCI (data) - DS1 to DS0 Channel System - per month (2.4-64kbs) used for connection to a channelized DS1 Local Channel in the same SWC as collocation | | | U1TUD | 1D1DD | 1.38 | 6.39 | 4.58 | | | | | | | | |
| | 2-wire ISDN COCI (BRITE) - DS1 to DS0 Channel System - per month for a Local Loop | | | UDN | UC1CA | 2.96 | 6.39 | 4.58 | | | | | | | | |

| CATEGORY | RATE ELEMENTS | Interim | Zone | BCS | USOC | RATES($) | | | | | Svc Order Submitted Elec per LSR | Svc Order Submitted Manually per LSR | Incremental Charge - Manual Svc Order vs. Electronic-1st | Incremental Charge - Manual Svc Order vs. Electronic-Add'l | Incremental Charge - Manual Svc Order vs. Electronic-Disc 1st | Incremental Charge - Manual Svc Order vs. Electronic-Disc Add'l |
|---|---|---|---|---|---|---|---|---|---|---|---|---|---|---|---|---|
| | | | | | | Rec | Nonrecurring | | Nonrecurring Disconnect | | OSS Rates($) | | | | | |
| | | | | | | | First | Add'l | First | Add'l | SOMEC | SOMAN | SOMAN | SOMAN | SOMAN | SOMAN |
| | 2-wire ISDN COCI (BRITE) - DS1 to DS0 Channel System - per month used for connection to a channelized DS1 Local Channel in the same SWC as collocation | | | U1TUB | UC1CA | 2.96 | 6.39 | 4.58 | | | | | | | | |
| | Voice Grade COCI - DS1 to DS0 Channel System - per month used for a Local Loop | | | UEA | 1D1VG | 0.6497 | 6.39 | 4.58 | | | | | | | | |
| | Voice Grade COCI - DS1 to DS0 Channel System - per month used for connection to a channelized DS1 Local Channel in the same SWC as collocation | | | U1TUC | 1D1VG | 0.6497 | 6.39 | 4.58 | | | | | | | | |
| | DS3 to DS1 Channel System per month | | | UNC3X | MQ3 | 201.48 | 107.05 | 91.25 | | | | | | | | |
| | Wholesale to UNE, Switch-As-Is Conversion Charge, 3/1 Channel System | | | UNC3X | UNCCC | | 5.43 | 5.43 | | | | | | | | |
| | STS-1 to DS1 Channel System per month | | | UNCSX | MQ3 | 201.48 | 107.05 | 91.25 | | | | | | | | |
| | Wholesale to UNE, Switch-As-Is Conversion Charge, 3/1 Channel System | | | UNCSX | UNCCC | | 5.43 | 5.43 | | | | | | | | |
| | DS1 COCI used with Loop per month | | | USL | UC1D1 | 11.78 | 6.39 | 4.58 | | | | | | | | |
| | DS1 COCI (used for connection to a channelized DS1 Local Channel in the same SWC as collocation) per month | | | U1TUA | UC1D1 | 11.78 | 6.39 | 4.58 | | | | | | | | |
| | DS1 COCI used with Interoffice Channel per month | | | U1TD1 | UC1D1 | 11.78 | 6.39 | 4.58 | | | | | | | | |
| | DS3 Interface Unit (DS1 COCI) used with Local Channel per month | | | ULDD1 | UC1D1 | 11.78 | 6.39 | 4.58 | | | | | | | | |
| **Access to DCS - Customer Reconfiguration (FlexServ)** | | | | | | | | | | | | | | | | |
| | Customer Reconfiguration Establishment | | | | | | 1.43 | | | | | | | | | |
| | DS1 DSC Termination with DS0 Switching | | | | | 19.58 | 24.81 | 19.09 | | | | | | | | |
| | DS1 DSC Termination with DS1 Switching | | | | | 10.95 | 17.93 | 12.22 | | | | | | | | |
| | DS3 DSC Termination with DS1 Switching | | | | | 149.41 | 24.81 | 19.09 | | | | | | | | |
| **Service Rearrangements** | | | | | | | | | | | | | | | | |
| | NRC - Change in Facility Assignment per circuit Service Rearrangement | I | | U1TVX, U1TDX, UEA, UDL, U1TUC, U1TUD, U1TUB, ULDVX, ULDDX, UNCVX, UNCDX | URETD | | 269.66 | 47.05 | | | | | | | | |
| | NRC - Change in Facility Assignment per circuit Project Management (added to CFA per circuit if project managed) | I | | U1TVX, U1TDX, UEA, UDL, U1TUC, U1TUD, U1TUB, ULDVX, ULDDX, UNCVX, UNCDX | URETB | | 1.28 | 1.28 | | | | | | | | |
| **Miscellaneous** | | | | | | | | | | | | | | | | |
| | NRC - Order Coordination Specific Time - Dedicated Transport | I | | UNC1X | OCOSR | | 18.85 | 18.85 | | | | | | | | |

## UNBUNDLED NETWORK ELEMENTS - Mississippi

Attachment: 2 Exh. A

| CATEGORY | RATE ELEMENTS | Interim | Zone | BCS | USOC | RATES($) Rec | Nonrecurring First | Nonrecurring Add'l | Nonrecurring Disconnect First | Nonrecurring Disconnect Add'l | Svc Order Submitted Elec per LSR | Svc Order Submitted Manually per LSR | Incremental Charge - Manual Svc Order vs. Electronic- 1st | Incremental Charge - Manual Svc Order vs. Electronic- Add'l | Incremental Charge - Manual Svc Order vs. Electronic- Disc 1st | Incremental Charge - Manual Svc Order vs. Electronic- Disc Add'l |
|---|---|---|---|---|---|---|---|---|---|---|---|---|---|---|---|---|
| | | | | | | | | | | | OSS Rates($) | | | | | |
| | | | | | | | First | Add'l | First | Add'l | SOMEC | SOMAN | SOMAN | SOMAN | SOMAN | SOMAN |
| | **The "Zone" shown in the sections for stand-alone loops or loops as part of a combination refers to Geographically Deaveraged UNE Zones. To view Geographically Deaveraged UNE Zone Designations by Central Office, refer to internet Website: http://www.interconnection.bellsouth.com/become_a_clec/html/interconnection.htm** | | | | | | | | | | | | | | | |
| **OPERATIONS SUPPORT SYSTEMS (OSS) - "STATE SPECIFIC RATES"** | | | | | | | | | | | | | | | | |
| | NOTE: (1) CLEC should contact its contract negotiator if it prefers the "regional" OSS charges as offered by BellSouth. The OSS charges currently contained in this rate exhibit are the PSC state ordered "state specificl" service ordering charges. CLEC may elect either the state | | | | | | | | | | | | | | | |
| | NOTE: (2) Any element that can be ordered electronically will be billed according to the SOMEC rate listed in this category. Please refer to BellSouth's Local Ordering Handbook (LOH) to determine if a product can be ordered electronically. For those elements that cannot be ordered electronically at present per the LOH, the listed SOMEC rate in this category reflects the charge that would be billed to a CLEC once electronic ordering capabilities come on-line for that element. Otherwise, the manual ordering charge, SOMAN, will be applied to a CLECs bill when it submits an LSR to BellSouth. | | | | | | | | | | | | | | | |
| | OSS - Electronic Service Order Charge, Per Local Service Request (LSR) - UNE Only | | | | SOMEC | | 5.70 | 0.00 | 3.57 | 0.00 | | | | | | |
| | OSS - Manual Service Order Charge, Per Local Service Request (LSR) - UNE Only | | | | SOMAN | | 15.75 | 0.00 | 1.97 | 0.00 | | | | | | |
| **UNE SERVICE DATE ADVANCEMENT CHARGE** | | | | | | | | | | | | | | | | |
| | **NOTE: The Expedite charge will be maintained commensurate with BellSouth's FCC No.1 Tariff, Section 5 as applicable.** | | | | | | | | | | | | | | | |
| | UNE Expedite Charge per Circuit or Line Assignable USOC, per Day | | | UAL, UEANL, UCL, UEF, UDF, UEQ, UDL, UENTW, UDN, UEA, UHL, ULC, USL, U1T12, U1T48, U1TD1, U1TD3, U1TDX, U1TO3, U1TS1, U1TVX, UC1BC, UC1BL, UC1CC, UC1CL, UC1DC, UC1DL, UC1EC, UC1EL, UC1FC, UC1FL, UC1GC, UC1GL, UC1HC, UC1HL, UDL12, UDL48, UDLO3, UDLSX, UE3, ULD12, ULD48, ULDD1, ULDD3, ULDDX, ULDO3, ULDS1, ULDVX, UNC1X, UNC3X, UNCDX, UNCNX, UNCSX, UNCVX, UNLD1, UNLD3, UXTD1, UXTD3, UXTS1, U1TUC, U1TUD, U1TUB, U1TUA,NTCVG, NTCUD, NTCD1 | SDASP | | 200.00 | 200.00 | | | | | | | | |
| **ORDER MODIFICATION CHARGE** | | | | | | | | | | | | | | | | |
| | Order Modification Charge (OMC) | | | | | | 26.21 | 0.00 | 0.00 | 0.00 | | | | | | |
| | Order Modification Additional Dispatch Charge (OMCAD) | | | | | | 150.00 | 0.00 | 0.00 | 0.00 | | | | | | |
| **UNBUNDLED EXCHANGE ACCESS LOOP** | | | | | | | | | | | | | | | | |
| | **2-WIRE ANALOG VOICE GRADE LOOP** | | | | | | | | | | | | | | | |
| | 2-Wire Analog Voice Grade Loop - Service Level 1- Zone 1 | | 1 | UEANL | UEAL2 | 12.03 | 37.92 | 17.55 | 23.48 | 5.25 | | | | | | |
| | 2-Wire Analog Voice Grade Loop - Service Level 1- Zone 2 | | 2 | UEANL | UEAL2 | 16.87 | 37.92 | 17.55 | 23.48 | 5.25 | | | | | | |
| | 2-Wire Analog Voice Grade Loop - Service Level 1- Zone 3 | | 3 | UEANL | UEAL2 | 25.68 | 37.92 | 17.55 | 23.48 | 5.25 | | | | | | |
| | 2-Wire Analog Voice Grade Loop - Service Level 1-Zone 4 | | 4 | UEANL | UEAL2 | 43.85 | 37.92 | 17.55 | 23.48 | 5.25 | | | | | | |
| | 2-Wire Analog Voice Grade Loop - Service Level 1- Zone 1 | | 1 | UEANL | UEASL | 12.03 | 37.92 | 17.55 | 23.48 | 5.25 | | | | | | |
| | 2-Wire Analog Voice Grade Loop - Service Level 1- Zone 2 | | 2 | UEANL | UEASL | 16.87 | 37.92 | 17.55 | 23.48 | 5.25 | | | | | | |
| | 2-Wire Analog Voice Grade Loop - Service Level 1- Zone 3 | | 3 | UEANL | UEASL | 25.68 | 37.92 | 17.55 | 23.48 | 5.25 | | | | | | |
| | 2-Wire Analog Voice Grade Loop - Service Level 1-Zone 4 | | 4 | UEANL | UEASL | 43.85 | 37.92 | 17.55 | 23.48 | 5.25 | | | | | | |

| CATEGORY | RATE ELEMENTS | Interim | Zone | BCS | USOC | RATES($) | | | | | Svc Order Submitted Elec per LSR | Svc Order Submitted Manually per LSR | Incremental Charge - Manual Svc Order vs. Electronic-1st | Incremental Charge - Manual Svc Order vs. Electronic-Add'l | Incremental Charge - Manual Svc Order vs. Electronic-Disc 1st | Incremental Charge - Manual Svc Order vs. Electronic-Disc Add'l |
|---|---|---|---|---|---|---|---|---|---|---|---|---|---|---|---|---|
| | | | | | | Rec | Nonrecurring | | Nonrecurring Disconnect | | OSS Rates($) | | | | | |
| | | | | | | | First | Add'l | First | Add'l | SOMEC | SOMAN | SOMAN | SOMAN | SOMAN | SOMAN |
| | Unbundled Miscellaneous Rate Element, Tag Loop at End User Premise | | | UEANL | URETL | | 8.92 | 0.88 | | | | | | | | |
| | Loop Testing - Basic 1st Half Hour | | | UEANL | URET1 | | 34.36 | 0.00 | | | | | | | | |
| | Loop Testing - Basic Additional Half Hour | | | UEANL | URETA | | 19.97 | 19.97 | | | | | | | | |
| | CLEC to CLEC Conversion Charge Without Outside Dispatch | | | UEANL | UREWO | | 15.75 | 8.92 | | | | | | | | |
| | Unbundled Voice Loop, Non-Design Voice Loop, billing for BST providing make-up (Engineering Information - E.I.) | | | UEANL | UEANM | | 13.51 | 13.51 | | | | | | | | |
| | Manual Order Coordination for UVL-SL1s (per loop) | | | UEANL | UEAMC | | 8.20 | 8.20 | | | | | | | | |
| **2-WIRE Unbundled COPPER LOOP** | | | | | | | | | | | | | | | | |
| | 2-Wire Unbundled Copper Loop - Non-Designed Zone 1 | I | 1 | UEQ | UEQ2X | 11.01 | 36.53 | 16.16 | 22.66 | 4.42 | | | | | | |
| | 2 Wire Unbundled Copper Loop - Non-Designed - Zone 2 | I | 2 | UEQ | UEQ2X | 11.51 | 36.53 | 16.16 | 22.66 | 4.42 | | | | | | |
| | 2 Wire Unbundled Copper Loop - Non-Designed - Zone 3 | I | 3 | UEQ | UEQ2X | 11.57 | 36.53 | 16.16 | 22.66 | 4.42 | | | | | | |
| | 2 Wire Unbundled Copper Loop - Non-Designed - Zone 4 | I | 4 | UEQ | UEQ2X | 13.10 | 36.53 | 16.16 | 22.66 | 4.42 | | | | | | |
| | Unbundled Miscellaneous Rate Element, Tag Loop at End User Premise | | | UEQ | URETL | | 8.92 | 0.88 | | | | | | | | |
| | Manual Order Coordination 2 Wire Unbundled Copper Loop - Non-Designed (per loop) | | | UEQ | USBMC | | 8.20 | 8.20 | | | | | | | | |
| | Unbundled Copper Loop, Non-Design Copper Loop, billing for BST providing make-up (Engineering Information - E.I.) | | | UEQ | UEQMU | | 13.51 | 13.51 | | | | | | | | |
| | Loop Testing - Basic 1st Half Hour | | | UEQ | URET1 | | 34.36 | 0.00 | | | | | | | | |
| | Loop Testing - Basic Additional Half Hour | | | UEQ | URETA | | 19.97 | 19.97 | | | | | | | | |
| | CLEC to CLEC Conversion Charge Without Outside Dispatch | | | UEQ | UREWO | | 14.24 | 7.42 | | | | | | | | |
| **UNBUNDLED EXCHANGE ACCESS LOOP** | | | | | | | | | | | | | | | | |
| **2-WIRE ANALOG VOICE GRADE LOOP** | | | | | | | | | | | | | | | | |
| | 2-Wire Analog Voice Grade Loop - Service Level 2 w/Loop or Ground Start Signaling - Zone 1 | | 1 | UEA, NTCVG | UEAL2 | 13.89 | 105.96 | 68.28 | 52.82 | 10.37 | | | | | | |
| | 2-Wire Analog Voice Grade Loop - Service Level 2 w/Loop or Ground Start Signaling - Zone 2 | | 2 | UEA, NTCVG | UEAL2 | 18.75 | 105.96 | 68.28 | 52.82 | 10.37 | | | | | | |
| | 2-Wire Analog Voice Grade Loop - Service Level 2 w/Loop or Ground Start Signaling - Zone 3 | | 3 | UEA, NTCVG | UEAL2 | 27.55 | 105.96 | 68.28 | 52.82 | 10.37 | | | | | | |
| | 2-Wire Analog Voice Grade Loop - Service Level 2 w/Loop or Ground Start Signaling - Zone 4 | | 4 | UEA, NTCVG | UEAL2 | 45.72 | 105.96 | 68.28 | 52.82 | 10.37 | | | | | | |
| | 2-Wire Analog Voice Grade Loop - Service Level 2 w/Reverse Battery Signaling - Zone 1 | | 1 | UEA, NTCVG | UEAR2 | 13.89 | 105.96 | 68.28 | 52.82 | 10.37 | | | | | | |
| | 2-Wire Analog Voice Grade Loop - Service Level 2 w/Reverse Battery Signaling - Zone 2 | | 2 | UEA, NTCVG | UEAR2 | 18.75 | 105.96 | 68.28 | 52.82 | 10.37 | | | | | | |
| | 2-Wire Analog Voice Grade Loop - Service Level 2 w/Reverse Battery Signaling - Zone 3 | | 3 | UEA, NTCVG | UEAR2 | 27.55 | 105.96 | 68.28 | 52.82 | 10.37 | | | | | | |
| | 2-Wire Analog Voice Grade Loop - Service Level 2 w/Reverse Battery Signaling - Zone 4 | | 4 | UEA, NTCVG | UEAR2 | 45.72 | 105.96 | 68.28 | 52.82 | 10.37 | | | | | | |
| | Switch-As-Is Conversion rate per UNE Loop, Single LSR, (per DS0) | | | UEA, NTCVG | URESL | | 22.01 | 3.16 | | | | | | | | |
| | Switch-As-Is Conversion rate per UNE Loop, Spreadsheet, (per DS0) | | | UEA, NTCVG | URESP | | 23.43 | 4.58 | | | | | | | | |
| | CLEC to CLEC Conversion Charge without outside dispatch | | | UEA, NTCVG | UREWO | | 87.56 | 36.29 | | | | | | | | |
| | Loop Tagging - Service Level 2 (SL2) | | | UEA, NTCVG | URETL | | 11.19 | 1.10 | | | | | | | | |
| **4-WIRE ANALOG VOICE GRADE LOOP** | | | | | | | | | | | | | | | | |
| | 4-Wire Analog Voice Grade Loop - Zone 1 | | 1 | UEA, NTCVG | UEAL4 | 27.47 | 132.27 | 94.59 | 60.68 | 14.64 | | | | | | |
| | 4-Wire Analog Voice Grade Loop - Zone 2 | | 2 | UEA, NTCVG | UEAL4 | 38.26 | 132.27 | 94.59 | 60.68 | 14.64 | | | | | | |
| | 4-Wire Analog Voice Grade Loop - Zone 3 | | 3 | UEA, NTCVG | UEAL4 | 50.03 | 132.27 | 94.59 | 60.68 | 14.64 | | | | | | |
| | 4-Wire Analog Voice Grade Loop - Zone 4 | | 4 | UEA, NTCVG | UEAL4 | 50.03 | 132.27 | 94.59 | 60.68 | 14.64 | | | | | | |
| | Switch-As-Is Conversion rate per UNE Loop, Single LSR, (per DS0) | | | UEA, NTCVG | URESL | | 22.01 | 3.16 | | | | | | | | |
| | Switch-As-Is Conversion rate per UNE Loop, Spreadsheet, (per DS0) | | | UEA, NTCVG | URESP | | 23.43 | 4.58 | | | | | | | | |
| | CLEC to CLEC Conversion Charge without outside dispatch | | | UEA, NTCVG | UREWO | | 87.56 | 36.29 | | | | | | | | |
| **2-WIRE ISDN DIGITAL GRADE LOOP** | | | | | | | | | | | | | | | | |
| | 2-Wire ISDN Digital Grade Loop - Zone 1 | | 1 | UDN | U1L2X | 21.01 | 117.61 | 79.92 | 52.82 | 10.37 | | | | | | |
| | 2-Wire ISDN Digital Grade Loop - Zone 2 | | 2 | UDN | U1L2X | 27.59 | 117.61 | 79.92 | 52.82 | 10.37 | | | | | | |

| CATEGORY | RATE ELEMENTS | Interim | Zone | BCS | USOC | RATES($) | | | | | Svc Order Submitted Elec per LSR | Svc Order Submitted Manually per LSR | Incremental Charge - Manual Svc Order vs. Electronic-1st | Incremental Charge - Manual Svc Order vs. Electronic-Add'l | Incremental Charge - Manual Svc Order vs. Electronic-Disc 1st | Incremental Charge - Manual Svc Order vs. Electronic-Disc Add'l |
|---|---|---|---|---|---|---|---|---|---|---|---|---|---|---|---|---|
| | | | | | | Rec | Nonrecurring | | Nonrecurring Disconnect | | OSS Rates($) | | | | | |
| | | | | | | | First | Add'l | First | Add'l | SOMEC | SOMAN | SOMAN | SOMAN | SOMAN | SOMAN |
| | 2-Wire ISDN Digital Grade Loop - Zone 3 | | 3 | UDN | U1L2X | 37.34 | 117.61 | 79.92 | 52.82 | 10.37 | | | | | | |
| | 2-Wire ISDN Digital Grade Loop - Zone 4 | | 4 | UDN | U1L2X | 59.18 | 117.61 | 79.92 | 52.82 | 10.37 | | | | | | |
| | CLEC to CLEC Conversion Charge without outside dispatch | | | UDN | UREWO | | 91.46 | 44.07 | | | | | | | | |
| **2-WIRE ASYMMETRICAL DIGITAL SUBSCRIBER LINE (ADSL) COMPATIBLE LOOP** | | | | | | | | | | | | | | | | |
| | 2 Wire Unbundled ADSL Loop including manual service inquiry & facility reservation - Zone 1 | | 1 | UAL | UAL2X | 11.11 | 121.27 | 70.81 | 50.38 | 7.93 | | | | | | |
| | 2 Wire Unbundled ADSL Loop including manual service inquiry & facility reservation - Zone 2 | | 2 | UAL | UAL2X | 11.47 | 121.27 | 70.81 | 50.38 | 7.93 | | | | | | |
| | 2 Wire Unbundled ADSL Loop including manual service inquiry & facility reservation - Zone 3 | | 3 | UAL | UAL2X | 11.74 | 121.27 | 70.81 | 50.38 | 7.93 | | | | | | |
| | 2 Wire Unbundled ADSL Loop including manual service inquiry & facility reservation - Zone 4 | | 4 | UAL | UAL2X | 12.69 | 121.27 | 70.81 | 50.38 | 7.93 | | | | | | |
| | 2 Wire Unbundled ADSL Loop without manual service inquiry & facility reservaton - Zone 1 | | 1 | UAL | UAL2W | 11.11 | 96.15 | 58.03 | 50.38 | 7.93 | | | | | | |
| | 2 Wire Unbundled ADSL Loop without manual service inquiry & facility reservaton - Zone 2 | | 2 | UAL | UAL2W | 11.47 | 96.15 | 58.03 | 50.38 | 7.93 | | | | | | |
| | 2 Wire Unbundled ADSL Loop without manual service inquiry & facility reservaton - Zone 3 | | 3 | UAL | UAL2W | 11.74 | 96.15 | 58.03 | 50.38 | 7.93 | | | | | | |
| | 2 Wire Unbundled ADSL Loop without manual service inquiry & facility reservaton - Zone 4 | | 4 | UAL | UAL2W | 12.69 | 96.15 | 58.03 | 50.38 | 7.93 | | | | | | |
| | CLEC to CLEC Conversion Charge without outside dispatch | | | UAL | UREWO | | 86.04 | 40.33 | | | | | | | | |
| **2-WIRE HIGH BIT RATE DIGITAL SUBSCRIBER LINE (HDSL) COMPATIBLE LOOP** | | | | | | | | | | | | | | | | |
| | 2 Wire Unbundled HDSL Loop including manual service inquiry & facility reservation - Zone 1 | | 1 | UHL | UHL2X | 8.75 | 129.98 | 79.52 | 50.38 | 7.93 | | | | | | |
| | 2 Wire Unbundled HDSL Loop including manual service inquiry & facility reservation - Zone 2 | | 2 | UHL | UHL2X | 9.22 | 129.98 | 79.52 | 50.38 | 7.93 | | | | | | |
| | 2 Wire Unbundled HDSL Loop including manual service inquiry & facility reservation - Zone 3 | | 3 | UHL | UHL2X | 9.87 | 129.98 | 79.52 | 50.38 | 7.93 | | | | | | |
| | 2 Wire Unbundled HDSL Loop including manual service inquiry & facility reservation - Zone 4 | | 4 | UHL | UHL2X | 10.46 | 129.98 | 79.52 | 50.38 | 7.93 | | | | | | |
| | 2 Wire Unbundled HDSL Loop without manual service inquiry and facility reservation - Zone 1 | | 1 | UHL | UHL2W | 8.75 | 104.86 | 66.74 | 50.38 | 7.93 | | | | | | |
| | 2 Wire Unbundled HDSL Loop without manual service inquiry and facility reservation - Zone 2 | | 2 | UHL | UHL2W | 9.22 | 104.86 | 66.74 | 50.38 | 7.93 | | | | | | |
| | 2 Wire Unbundled HDSL Loop without manual service inquiry and facility reservation - Zone 3 | | 3 | UHL | UHL2W | 9.87 | 104.86 | 66.74 | 50.38 | 7.93 | | | | | | |
| | 2 Wire Unbundled HDSL Loop without manual service inquiry and facility reservation - Zone 4 | | 4 | UHL | UHL2W | 10.46 | 104.86 | 66.74 | 50.38 | 7.93 | | | | | | |
| | CLEC to CLEC Conversion Charge without outside dispatch | | | UHL | UREWO | | 85.98 | 40.33 | | | | | | | | |
| **4-WIRE HIGH BIT RATE DIGITAL SUBSCRIBER LINE (HDSL) COMPATIBLE LOOP** | | | | | | | | | | | | | | | | |
| | 4 Wire Unbundled HDSL Loop including manual service inquiry and facility reservation - Zone 1 | | 1 | UHL | UHL4X | 13.78 | 158.74 | 108.28 | 56.72 | 10.68 | | | | | | |
| | 4-Wire Unbundled HDSL Loop including manual service inquiry and facility reservation - Zone 2 | | 2 | UHL | UHL4X | 13.43 | 158.74 | 108.28 | 56.72 | 10.68 | | | | | | |
| | 4-Wire Unbundled HDSL Loop including manual service inquiry and facility reservation - Zone 3 | | 3 | UHL | UHL4X | 15.59 | 158.74 | 108.28 | 56.72 | 10.68 | | | | | | |
| | 4-Wire Unbundled HDSL Loop including manual service inquiry and facility reservation - Zone 4 | | 4 | UHL | UHL4X | 14.46 | 158.74 | 108.28 | 56.72 | 10.68 | | | | | | |
| | 4-Wire Unbundled HDSL Loop without manual service inquiry and facility reservation - Zone 1 | | 1 | UHL | UHL4W | 13.78 | 133.62 | 95.50 | 56.72 | 10.68 | | | | | | |
| | 4-Wire Unbundled HDSL Loop without manual service inquiry and facility reservation - Zone 2 | | 2 | UHL | UHL4W | 13.43 | 133.62 | 95.50 | 56.72 | 10.68 | | | | | | |
| | 4-Wire Unbundled HDSL Loop without manual service inquiry and facility reservation - Zone 3 | | 3 | UHL | UHL4W | 15.59 | 133.62 | 95.50 | 56.72 | 10.68 | | | | | | |
| | 4-Wire Unbundled HDSL Loop without manual service inquiry and facility reservation - Zone 4 | | 4 | UHL | UHL4W | 14.46 | 133.62 | 95.50 | 56.72 | 10.68 | | | | | | |
| | CLEC to CLEC Conversion Charge without outside dispatch | | | UHL | UREWO | | 85.98 | 40.33 | | | | | | | | |
| **4-WIRE DS1 DIGITAL LOOP** | | | | | | | | | | | | | | | | |
| | 4-Wire DS1 Digital Loop - Zone 1 | | 1 | USL, NTCD1 | USLXX | 79.08 | 253.93 | 158.45 | 46.10 | 12.07 | | | | | | |

| CATEGORY | RATE ELEMENTS | Interim | Zone | BCS | USOC | RATES($) | | | | | Svc Order Submitted Elec per LSR | Svc Order Submitted Manually per LSR | Incremental Charge - Manual Svc Order vs. Electronic-1st | Incremental Charge - Manual Svc Order vs. Electronic-Add'l | Incremental Charge - Manual Svc Order vs. Electronic-Disc 1st | Incremental Charge - Manual Svc Order vs. Electronic-Disc Add'l |
|---|---|---|---|---|---|---|---|---|---|---|---|---|---|---|---|---|
| | | | | | | Rec | Nonrecurring | | Nonrecurring Disconnect | | OSS Rates($) | | | | | |
| | | | | | | | First | Add'l | First | Add'l | SOMEC | SOMAN | SOMAN | SOMAN | SOMAN | SOMAN |
| | 4-Wire DS1 Digital Loop - Zone 2 | | 2 | USL, NTCD1 | USLXX | 129.38 | 253.93 | 158.45 | 46.10 | 12.07 | | | | | | |
| | 4-Wire DS1 Digital Loop - Zone 3 | | 3 | USL, NTCD1 | USLXX | 206.74 | 253.93 | 158.45 | 46.10 | 12.07 | | | | | | |
| | 4-Wire DS1 Digital Loop - Zone 4 | | 4 | USL, NTCD1 | USLXX | 458.46 | 253.93 | 158.45 | 46.10 | 12.07 | | | | | | |
| | Switch-As-Is Conversion rate per UNE Loop, Single LSR, (per DS1) | | | USL, NTCD1 | URESL | | 22.01 | 3.16 | | | | | | | | |
| | Switch-As-Is Conversion rate per UNE Loop, Spreadsheet, (per DS1) | | | USL, NTCD1 | URESP | | 23.43 | 4.58 | | | | | | | | |
| | CLEC to CLEC Conversion Charge without outside dispatch | | | USL | UREWO | | 100.90 | 42.96 | | | | | | | | |
| **4-WIRE 19.2, 56 OR 64 KBPS DIGITAL GRADE LOOP** | | | | | | | | | | | | | | | | |
| | 4 Wire Unbundled Digital 19.2 Kbps | | 1 | UDL, NTCUD | UDL19 | 27.44 | 126.53 | 88.85 | 60.68 | 14.64 | | | | | | |
| | 4 Wire Unbundled Digital 19.2 Kbps | | 2 | UDL, NTCUD | UDL19 | 34.55 | 126.53 | 88.85 | 60.68 | 14.64 | | | | | | |
| | 4 Wire Unbundled Digital 19.2 Kbps | | 3 | UDL, NTCUD | UDL19 | 40.76 | 126.53 | 88.85 | 60.68 | 14.64 | | | | | | |
| | 4 Wire Unbundled Digital 19.2 Kbps | | 4 | UDL, NTCUD | UDL19 | 32.25 | 126.53 | 88.85 | 60.68 | 14.64 | | | | | | |
| | 4 Wire Unbundled Digital Loop 56 Kbps - Zone 1 | | 1 | UDL, NTCUD | UDL56 | 27.44 | 126.53 | 88.85 | 60.68 | 14.64 | | | | | | |
| | 4 Wire Unbundled Digital Loop 56 Kbps - Zone 2 | | 2 | UDL, NTCUD | UDL56 | 34.55 | 126.53 | 88.85 | 60.68 | 14.64 | | | | | | |
| | 4 Wire Unbundled Digital Loop 56 Kbps - Zone 3 | | 3 | UDL, NTCUD | UDL56 | 40.76 | 126.53 | 88.85 | 60.68 | 14.64 | | | | | | |
| | 4 Wire Unbundled Digital Loop 56 Kbps - Zone 4 | | 4 | UDL, NTCUD | UDL56 | 32.25 | 126.53 | 88.85 | 60.68 | 14.64 | | | | | | |
| | 4 Wire Unbundled Digital Loop 64 Kbps - Zone 1 | | 1 | UDL, NTCUD | UDL64 | 27.44 | 126.53 | 88.85 | 60.68 | 14.64 | | | | | | |
| | 4 Wire Unbundled Digital Loop 64 Kbps - Zone 2 | | 2 | UDL, NTCUD | UDL64 | 34.55 | 126.53 | 88.85 | 60.68 | 14.64 | | | | | | |
| | 4 Wire Unbundled Digital Loop 64 Kbps - Zone 3 | | 3 | UDL, NTCUD | UDL64 | 40.76 | 126.53 | 88.85 | 60.68 | 14.64 | | | | | | |
| | 4 Wire Unbundled Digital Loop 64 Kbps - Zone 4 | | 4 | UDL, NTCUD | UDL64 | 32.25 | 126.53 | 88.85 | 60.68 | 14.64 | | | | | | |
| | Switch-As-Is Conversion rate per UNE Loop, Single LSR, (per DS0) | | | UDL, NTCUD | URESL | | 22.01 | 3.16 | | | | | | | | |
| | Switch-As-Is Conversion rate per UNE Loop, Spreadsheet, (per DS0) | | | UDL, NTCUD | URESP | | 23.43 | 4.58 | | | | | | | | |
| | CLEC to CLEC Conversion Charge without outside dispatch | | | UDL, NTCUD | UREWO | | 101.94 | 49.66 | | | | | | | | |
| **2-WIRE Unbundled COPPER LOOP** | | | | | | | | | | | | | | | | |
| | 2-Wire Unbundled Copper Loop-Designed including manual service inquiry & facility reservation - Zone 1 | | 1 | UCL | UCLPB | 11.11 | 120.34 | 69.87 | 50.38 | 7.93 | | | | | | |
| | 2-Wire Unbundled Copper Loop-Designed including manual service inquiry & facility reservation - Zone 2 | | 2 | UCL | UCLPB | 11.47 | 120.34 | 69.87 | 50.38 | 7.93 | | | | | | |
| | 2 Wire Unbundled Copper Loop-Designed including manual service inquiry & facility reservation - Zone 3 | | 3 | UCL | UCLPB | 11.74 | 120.34 | 69.87 | 50.38 | 7.93 | | | | | | |
| | 2 Wire Unbundled Copper Loop-Designed including manual service inquiry & facility reservation - Zone 4 | | 4 | UCL | UCLPB | 12.69 | 120.34 | 69.87 | 50.38 | 7.93 | | | | | | |
| | 2-Wire Unbundled Copper Loop-Designed without manual service inquiry and facility reservation - Zone 1 | | 1 | UCL | UCLPW | 11.11 | 95.21 | 57.09 | 50.38 | 7.93 | | | | | | |
| | 2-Wire Unbundled Copper Loop-Designed without manual service inquiry and facility reservation - Zone 2 | | 2 | UCL | UCLPW | 11.47 | 95.21 | 57.09 | 50.38 | 7.93 | | | | | | |
| | 2-Wire Unbundled Copper Loop-Designed without manual service inquiry and facility reservation - Zone 3 | | 3 | UCL | UCLPW | 11.74 | 95.21 | 57.09 | 50.38 | 7.93 | | | | | | |
| | 2-Wire Unbundled Copper Loop-Designed without manual service inquiry and facility reservation - Zone 4 | | 4 | UCL | UCLPW | 12.69 | 95.21 | 57.09 | 50.38 | 7.93 | | | | | | |
| | CLEC to CLEC Conversion Charge without outside dispatch (UCL-Des) | | | UCL | UREWO | | 95.21 | 42.40 | | | | | | | | |
| **4-WIRE COPPER LOOP** | | | | | | | | | | | | | | | | |
| | 4-Wire Copper Loop-Designed including manual service inquiry and facility reservation - Zone 1 | | 1 | UCL | UCL4S | 17.30 | 144.68 | 94.22 | 56.72 | 10.68 | | | | | | |
| | 4-Wire Copper Loop-Designed including manual service inquiry and facility reservation - Zone 2 | | 2 | UCL | UCL4S | 18.84 | 144.68 | 94.22 | 56.72 | 10.68 | | | | | | |
| | 4-Wire Copper Loop-Designed including manual service inquiry and facility reservation - Zone 3 | | 3 | UCL | UCL4S | 21.33 | 144.68 | 94.22 | 56.72 | 10.68 | | | | | | |
| | 4-Wire Copper Loop-Designed including manual service inquiry and facility reservation - Zone 4 | | 4 | UCL | UCL4S | 21.33 | 144.68 | 94.22 | 56.72 | 10.68 | | | | | | |
| | 4-Wire Copper Loop-Designed without manual service inquiry and facility reservation - Zone 1 | | 1 | UCL | UCL4W | 17.30 | 119.56 | 81.44 | 56.72 | 10.68 | | | | | | |
| | 4-Wire Copper Loop-Designed without manual service inquiry and facility reservation - Zone 2 | | 2 | UCL | UCL4W | 18.84 | 119.56 | 81.44 | 56.72 | 10.68 | | | | | | |

| CATEGORY | | RATE ELEMENTS | Interim | Zone | BCS | USOC | RATES($) | | | | | Svc Order Submitted Elec per LSR | Svc Order Submitted Manually per LSR | Incremental Charge - Manual Svc Order vs. Electronic-1st | Incremental Charge - Manual Svc Order vs. Electronic-Add'l | Incremental Charge - Manual Svc Order vs. Electronic-Disc 1st | Incremental Charge - Manual Svc Order vs. Electronic-Disc Add'l |
|---|---|---|---|---|---|---|---|---|---|---|---|---|---|---|---|---|---|
| | | | | | | | Rec | Nonrecurring | | Nonrecurring Disconnect | | OSS Rates($) | | | | | |
| | | | | | | | | First | Add'l | First | Add'l | SOMEC | SOMAN | SOMAN | SOMAN | SOMAN | SOMAN |
| | | 4-Wire Copper Loop-Designed without manual service inquiry and facility reservation - Zone 3 | | 3 | UCL | UCL4W | 21.33 | 119.56 | 81.44 | 56.72 | 10.68 | | | | | | |
| | | 4-Wire Copper Loop-Designed without manual service inquiry and facility reservation - Zone 4 | | 4 | UCL | UCL4W | 21.33 | 119.56 | 81.44 | 56.72 | 10.68 | | | | | | |
| | | CLEC to CLEC Conversion Charge without outside dispatch (UCL-Des) | | | UCL | UREWO | | 95.21 | 42.40 | | | | | | | | |
| | | Order Coordination for Unbundled Copper Loops (per loop) | | | UCL | UCLMC | | 8.20 | 8.20 | | | | | | | | |
| | | Order Coordination for Specified Conversion Time (per LSR) | | | UEA, UDN, UAL, UHL, UDL, NTCVG, NTCUD, USL, NTCD1, UEANL | OCOSL | | 18.19 | | | | | | | | | |
| **LOOP MODIFICATION** | | | | | | | | | | | | | | | | | |
| | | Unbundled Loop Modification, Removal of Load Coils - 2 Wire pair less than or equal to 18k ft, per Unbundled Loop | | | UAL, UHL, UCL, UEQ, ULS, UEA, UEANL, UEPSR, UEPSB | ULM2L | | 32.57 | 32.57 | | | | | | | | |
| | | Unbundled Loop Modification Removal of Load Coils - 4 Wire less than or equal to 18K ft, per Unbundled Loop | | | UHL, UCL, UEA | ULM4L | | 32.57 | 32.57 | | | | | | | | |
| | | Unbundled Loop Modification Removal of Bridged Tap Removal, per unbundled loop | | | UAL, UHL, UCL, UEQ, ULS, UEA, UEANL, UEPSR, UEPSB | ULMBT | | 32.59 | 32.59 | | | | | | | | |
| **SUB-LOOPS** | | | | | | | | | | | | | | | | | |
| | **Sub-Loop Distribution** | | | | | | | | | | | | | | | | |
| | | Sub-Loop - Per Cross Box Location - CLEC Feeder Facility Set-Up | I | | UEANL, UEF | USBSA | | 259.69 | | | | | | | | | |
| | | Sub-Loop - Per Cross Box Location - Per 25 Pair Panel Set-Up | I | | UEANL, UEF | USBSB | | 22.77 | | | | | | | | | |
| | | Sub-Loop - Per Building Equipment Room - CLEC Feeder Facility Set-Up | I | | UEANL | USBSC | | 178.47 | | | | | | | | | |
| | | Sub-Loop - Per Building Equipment Room - Per 25 Pair Panel Set-Up | I | | UEANL | USBSD | | 56.39 | | | | | | | | | |
| | | Sub-Loop Distribution Per 2-Wire Analog Voice Grade Loop - Zone 1 | | 1 | UEANL | USBN2 | 7.15 | 66.18 | 31.14 | 45.36 | 6.71 | | | | | | |
| | | Sub-Loop Distribution Per 2-Wire Analog Voice Grade Loop - Zone 2 | | 2 | UEANL | USBN2 | 9.51 | 66.18 | 31.14 | 45.36 | 6.71 | | | | | | |
| | | Sub-Loop Distribution Per 2-Wire Analog Voice Grade Loop - Zone 3 | | 3 | UEANL | USBN2 | 12.45 | 66.18 | 31.14 | 45.36 | 6.71 | | | | | | |
| | | Sub-Loop Distribution Per 2-Wire Analog Voice Grade Loop - Zone 4 | | 4 | UEANL | USBN2 | 18.26 | 66.18 | 31.14 | 45.36 | 6.71 | | | | | | |
| | | Order Coordination for Unbundled Sub-Loops, per sub-loop pair | | | UEANL | USBMC | | 8.20 | 8.20 | | | | | | | | |
| | | Sub-Loop Distribution Per 4-Wire Analog Voice Grade Loop - Zone 1 | | 1 | UEANL | USBN4 | 7.30 | 79.49 | 44.45 | 51.27 | 9.35 | | | | | | |
| | | Sub-Loop Distribution Per 4-Wire Analog Voice Grade Loop - Zone 2 | | 2 | UEANL | USBN4 | 13.92 | 79.49 | 44.45 | 51.27 | 9.35 | | | | | | |
| | | Sub-Loop Distribution Per 4-Wire Analog Voice Grade Loop - Zone 3 | | 3 | UEANL | USBN4 | 16.73 | 79.49 | 44.45 | 51.27 | 9.35 | | | | | | |
| | | Sub-Loop Distribution Per 4-Wire Analog Voice Grade Loop - Zone 4 | | 4 | UEANL | USBN4 | 16.73 | 79.49 | 44.45 | 51.27 | 9.35 | | | | | | |
| | | Order Coordination for Unbundled Sub-Loops, per sub-loop pair | | | UEANL | USBMC | | 8.20 | 8.20 | | | | | | | | |
| | | Sub-Loop 2-Wire Intrabuilding Network Cable (INC) | | | UEANL | USBR2 | 2.29 | 53.32 | 18.28 | 45.36 | 6.71 | | | | | | |
| | | Order Coordination for Unbundled Sub-Loops, per sub-loop pair | | | UEANL | USBMC | | 8.20 | 8.20 | | | | | | | | |
| | | Sub-Loop 4-Wire Intrabuilding Network Cable (INC) | | | UEANL | USBR4 | 4.40 | 59.60 | 24.55 | 51.27 | 9.35 | | | | | | |
| | | Order Coordination for Unbundled Sub-Loops, per sub-loop pair | | | UEANL | USBMC | | 8.20 | 8.20 | | | | | | | | |
| | | Loop Testing - Basic 1st Half Hour | | | UEANL | URET1 | | 34.36 | 0.00 | | | | | | | | |

| CATEGORY | RATE ELEMENTS | Interim | Zone | BCS | USOC | RATES($) | | | | | Svc Order Submitted Elec per LSR | Svc Order Submitted Manually per LSR | Incremental Charge - Manual Svc Order vs. Electronic-1st | Incremental Charge - Manual Svc Order vs. Electronic-Add'l | Incremental Charge - Manual Svc Order vs. Electronic-Disc 1st | Incremental Charge - Manual Svc Order vs. Electronic-Disc Add'l |
|---|---|---|---|---|---|---|---|---|---|---|---|---|---|---|---|---|
| | | | | | | Rec | Nonrecurring | | Nonrecurring Disconnect | | OSS Rates($) | | | | | |
| | | | | | | | First | Add'l | First | Add'l | SOMEC | SOMAN | SOMAN | SOMAN | SOMAN | SOMAN |
| | Loop Testing - Basic Additional Half Hour | | | UEANL | URETA | | 19.97 | 19.97 | | | | | | | | |
| | 2 Wire Copper Unbundled Sub-Loop Distribution - Zone 1 | | 1 | UEF | UCS2X | 6.06 | 66.18 | 31.14 | 45.36 | 6.71 | | | | | | |
| | 2 Wire Copper Unbundled Sub-Loop Distribution - Zone 2 | | 2 | UEF | UCS2X | 7.09 | 66.18 | 31.14 | 45.36 | 6.71 | | | | | | |
| | 2 Wire Copper Unbundled Sub-Loop Distribution - Zone 3 | | 3 | UEF | UCS2X | 8.16 | 66.18 | 31.14 | 45.36 | 6.71 | | | | | | |
| | 2 Wire Copper Unbundled Sub-Loop Distribution - Zone 4 | | 4 | UEF | UCS2X | 9.90 | 66.18 | 31.14 | 45.36 | 6.71 | | | | | | |
| | Order Coordination for Unbundled Sub-Loops, per sub-loop pair | | | UEF | USBMC | | 8.20 | 8.20 | | | | | | | | |
| | 4 Wire Copper Unbundled Sub-Loop Distribution - Zone 1 | | 1 | UEF | UCS4X | 5.10 | 79.49 | 44.45 | 51.27 | 9.35 | | | | | | |
| | 4 Wire Copper Unbundled Sub-Loop Distribution - Zone 2 | | 2 | UEF | UCS4X | 9.11 | 79.49 | 44.45 | 51.27 | 9.35 | | | | | | |
| | 4 Wire Copper Unbundled Sub-Loop Distribution - Zone 3 | | 3 | UEF | UCS4X | 14.00 | 79.49 | 44.45 | 51.27 | 9.35 | | | | | | |
| | 4 Wire Copper Unbundled Sub-Loop Distribution - Zone 4 | | 4 | UEF | UCS4X | 14.00 | 79.49 | 44.45 | 51.27 | 9.35 | | | | | | |
| | Order Coordination for Unbundled Sub-Loops, per sub-loop pair | | | UEF | USBMC | | 8.20 | 8.20 | | | | | | | | |
| | Loop Tagging Service Level 1, Unbundled Copper Loop, Non-Designed and Distribution Subloops | | | UEF, UEANL | URETL | | 8.92 | 0.88 | | | | | | | | |
| | Loop Testing - Basic 1st Half Hour | | | UEF | URET1 | | 34.36 | 0.00 | | | | | | | | |
| | Loop Testing - Basic Additional Half Hour | | | UEF | URETA | | 19.97 | 19.97 | | | | | | | | |
| | **Unbundled Sub-Loop Modification** | | | | | | | | | | | | | | | |
| | Unbundled Sub-Loop Modification - 2-W Copper Dist Load Coil/Equip Removal per 2-W PR | | | UEF | ULM2X | | 176.80 | 5.13 | | | | | | | | |
| | Unbundled Sub-loop Modification - 4-W Copper Dist Load Coil/Equip Removal per 4-W PR | | | UEF | ULM4X | | 176.80 | 5.13 | | | | | | | | |
| | Unbundled Loop Modification, Removal of Bridge Tap, per unbundled loop | | | UEF | ULMBT | | 279.81 | 6.15 | | | | | | | | |
| | **Unbundled Network Terminating Wire (UNTW)** | | | | | | | | | | | | | | | |
| | Unbundled Network Terminating Wire (UNTW) per Pair | | | UENTW | UENPP | 0.3366 | 30.55 | | | | | | | | | |
| | **Network Interface Device (NID)** | | | | | | | | | | | | | | | |
| | Network Interface Device (NID) - 1-2 lines | | | UENTW | UND12 | | 43.84 | 28.90 | | | | | | | | |
| | Network Interface Device (NID) - 1-6 lines | | | UENTW | UND16 | | 65.30 | 50.36 | | | | | | | | |
| | Network Interface Device Cross Connect - 2 W | | | UENTW | UNDC2 | | 5.94 | 5.94 | | | | | | | | |
| | Network Interface Device Cross Connect - 4W | | | UENTW | UNDC4 | | 5.94 | 5.94 | | | | | | | | |
| **UNE OTHER, PROVISIONING ONLY - NO RATE** | | | | | | | | | | | | | | | | |
| | Unbundled Contact Name, Provisioning Only - no rate | | | UAL, UCL, UDC, UDL, UDN, UEA, UHL, UEANL, UEF, UEQ, UENTW, NTCVG, NTCUD, NTCD1, USL | UNECN | 0.00 | 0.00 | | | | | | | | | |
| | Unbundled DS1 Loop - Superframe Format Option - no rate | | | USL | CCOSF | 0.00 | 0.00 | | | | | | | | | |
| | Unbundled DS1 Loop - Expanded Superframe Format option - no rate | | | USL | CCOEF | 0.00 | 0.00 | | | | | | | | | |
| | NID - Dispatch and Service Order for NID installation | | | UENTW | UNDBX | 0.00 | 0.00 | | | | | | | | | |
| | UNTW Circuit Establishment, Provisioning Only - No Rate | | | UENTW | UENCE | 0.00 | 0.00 | | | | | | | | | |
| **HIGH CAPACITY UNBUNDLED LOCAL LOOP** | | | | | | | | | | | | | | | | |
| | **NOTE: minimum billing period of three months for DS3/STS-1 Local Loop** | | | | | | | | | | | | | | | |
| | High Capacity Unbundled Local Loop - DS3 - Per Mile per month | | | UE3 | 1L5ND | 11.20 | | | | | | | | | | |
| | High Capacity Unbundled Local Loop - DS3 - Facility Termination per month | | | UE3 | UE3PX | 326.15 | 454.13 | 265.47 | 123.23 | 86.19 | | | | | | |
| | High Capacity Unbundled Local Loop - STS-1 - Per Mile per month | | | UDLSX | 1L5ND | 11.20 | | | | | | | | | | |
| | High Capacity Unbundled Local Loop - STS-1 - Facility Termination per month | | | UDLSX | UDLS1 | 338.55 | 454.13 | 265.47 | 123.23 | 86.19 | | | | | | |
| **LOOP MAKE-UP** | | | | | | | | | | | | | | | | |
| | Loop Makeup - Preordering Without Reservation, per working or spare facility queried (Manual). | | | UMK | UMKLW | | 24.12 | 24.12 | | | | | | | | |
| | Loop Makeup - Preordering With Reservation, per spare facility queried (Manual). | | | UMK | UMKLP | | 25.58 | 25.58 | | | | | | | | |

| CATEGORY | RATE ELEMENTS | Interim | Zone | BCS | USOC | RATES($) | | | | | Svc Order Submitted Elec per LSR | Svc Order Submitted Manually per LSR | Incremental Charge - Manual Svc Order vs. Electronic-1st | Incremental Charge - Manual Svc Order vs. Electronic-Add'l | Incremental Charge - Manual Svc Order vs. Electronic-Disc 1st | Incremental Charge - Manual Svc Order vs. Electronic-Disc Add'l |
|---|---|---|---|---|---|---|---|---|---|---|---|---|---|---|---|---|
| | | | | | | Rec | Nonrecurring | | Nonrecurring Disconnect | | OSS Rates($) | | | | | |
| | | | | | | | First | Add'l | First | Add'l | SOMEC | SOMAN | SOMAN | SOMAN | SOMAN | SOMAN |
| | Loop Makeup--With or Without Reservation, per working or spare facility queried (Mechanized) | | | UMK | UMKMQ | | 0.6652 | 0.6652 | | | | | | | | |
| **LINE SPLITTING** | | | | | | | | | | | | | | | | |
| | **END USER ORDERING-CENTRAL OFFICE BASED** | | | | | | | | | | | | | | | |
| | Line Splitting - per line activation DLEC owned splitter | | | UEPSR UEPSB | UREOS | 0.61 | | | | | | | | | | |
| | Line Splitting - per line activation BST owned - physical | | | UEPSR UEPSB | UREBP | 0.61 | 18.62 | 10.66 | 10.04 | 4.93 | | | | | | |
| | Line Splitting - per line activation BST owned - virtual | | | UEPSR UEPSB | UREBV | 0.61 | 18.62 | 10.66 | 10.04 | 4.93 | | | | | | |
| | **UNBUNDLED EXCHANGE ACCESS LOOP** | | | | | | | | | | | | | | | |
| | **2-WIRE ANALOG VOICE GRADE LOOP** | | | | | | | | | | | | | | | |
| | 2 Wire Analog Voice Grade Loop-Service Level 1-Line Splitting-Zone 1 | | 1 | UEPSR UEPSB | UEALS | 12.03 | 37.92 | 17.55 | 23.48 | 5.25 | | | | | | |
| | 2 Wire Analog Voice Grade Loop-Service Level 1-Line Splitting-Zone 1 | | 1 | UEPSR UEPSB | UEABS | 12.03 | 37.92 | 17.55 | 23.48 | 5.25 | | | | | | |
| | 2 Wire Analog Voice Grade Loop- Service Level 1-Line Splitting-Zone 2 | | 2 | UEPSR UEPSB | UEALS | 16.87 | 37.92 | 17.55 | 23.48 | 5.25 | | | | | | |
| | 2 Wire Analog Voice Grade Loop- Service Level 1-Line Splitting-Zone 2 | | 2 | UEPSR UEPSB | UEABS | 16.87 | 37.92 | 17.55 | 23.48 | 5.25 | | | | | | |
| | 2 Wire Analog Voice Grade Loop-Service Level 1-Line Splitting-Zone 3 | | 3 | UEPSR UEPSB | UEALS | 25.68 | 37.92 | 17.55 | 23.48 | 5.25 | | | | | | |
| | 2 Wire Analog Voice Grade Loop-Service Level 1-Line Splitting-Zone 3 | | 3 | UEPSR UEPSB | UEABS | 25.68 | 37.92 | 17.55 | 23.48 | 5.25 | | | | | | |
| | 2 Wire Analog Voice Grade Loop-Service Level 1-Line Splitting-Zone 4 | | 4 | UEPSR UEPSB | UEALS | 43.85 | 37.92 | 17.55 | 23.48 | 5.25 | | | | | | |
| | 2 Wire Analog Voice Grade Loop-Service Level 1-Line Splitting-Zone 4 | | 4 | UEPSR UEPSB | UEABS | 43.85 | 37.92 | 17.55 | 23.48 | 5.25 | | | | | | |
| | **PHYSICAL COLLOCATION** | | | | | | | | | | | | | | | |
| | Physical Collocation-2 Wire Cross Connects (Loop) for Line Splitting | | | UEPSR UEPSB | PE1LS | 0.0288 | 12.37 | 11.87 | 6.04 | 5.45 | | | | | | |
| | **VIRTUAL COLLOCATION** | | | | | | | | | | | | | | | |
| | Virtual Collocation-2 Wire Cross Connects (Loop) for Line Splitting | | | UEPSR UEPSB | VE1LS | 0.0268 | 12.37 | 11.87 | 6.04 | 5.45 | | | | | | |
| **UNBUNDLED DEDICATED TRANSPORT** | | | | | | | | | | | | | | | | |
| | **INTEROFFICE CHANNEL - DEDICATED TRANSPORT** | | | | | | | | | | | | | | | |
| | Interoffice Channel - Dedicated Transport - 2-Wire Voice Grade - Per Mile per month | | | U1TVX | 1L5XX | 0.0098 | | | | | | | | | | |
| | Interoffice Channel - Dedicated Transport- 2- Wire Voice Grade - Facility Termination | | | U1TVX | U1TV2 | 22.52 | 40.77 | 27.57 | 17.26 | 7.11 | | | | | | |
| | Interoffice Channel - Dedicated Transpor t- 2-Wire Voice Grade Rev Bat. - Per Mile per month | | | U1TVX | 1L5XX | 0.0098 | | | | | | | | | | |
| | Interoffice Channel - Dedicated Transport- 2- Wire VG Rev Bat. - Facility Termination | | | U1TVX | U1TR2 | 22.52 | 40.77 | 27.57 | 17.26 | 7.11 | | | | | | |
| | Interoffice Channel - Dedicated Transport - 4-Wire Voice Grade - Per Mile per month | | | U1TVX | 1L5XX | 0.0098 | | | | | | | | | | |
| | Interoffice Channel - Dedicated Transport - 4- Wire Voice Grade - Facility Termination | | | U1TVX | U1TV4 | 19.79 | 40.77 | 27.57 | 17.26 | 7.11 | | | | | | |
| | Wholesale to UNE Switch-As-Is Charge | | | U1TVX | UNCCC | | 5.63 | 5.63 | 7.20 | 7.20 | | | | | | |
| | Interoffice Channel - Dedicated Transport - 56 kbps - per mile per month | | | U1TDX | 1L5XX | 0.0098 | | | | | | | | | | |
| | Interoffice Channel - Dedicated Transport - 56 kbps - Facility Termination | | | U1TDX | U1TD5 | 15.68 | 40.78 | 27.57 | 17.26 | 7.11 | | | | | | |
| | Interoffice Channel - Dedicated Transport - 64 kbps - per mile per month | | | U1TDX | 1L5XX | 0.0098 | | | | | | | | | | |
| | Interoffice Channel - Dedicated Transport - 64 kbps - Facility Termination | | | U1TDX | U1TD6 | 15.68 | 40.78 | 27.57 | 17.26 | 7.11 | | | | | | |
| | Wholesale to UNE Switch-As-Is Charge | | | U1TDX | UNCCC | | 5.63 | 5.63 | 7.20 | 7.20 | | | | | | |
| | Interoffice Channel - Dedicated Channel - DS1 - Per Mile per month | | | U1TD1 | 1L5XX | 0.201 | | | | | | | | | | |
| | Interoffice Channel - Dedicated Tranport - DS1 - Facility Termination | | | U1TD1 | U1TF1 | 57.33 | 89.79 | 82.28 | 16.86 | 14.90 | | | | | | |

| CATEGORY | RATE ELEMENTS | Interim | Zone | BCS | USOC | RATES($) | | | | | Svc Order Submitted Elec per LSR | Svc Order Submitted Manually per LSR | Incremental Charge - Manual Svc Order vs. Electronic-1st | Incremental Charge - Manual Svc Order vs. Electronic-Add'l | Incremental Charge - Manual Svc Order vs. Electronic-Disc 1st | Incremental Charge - Manual Svc Order vs. Electronic-Disc Add'l |
|---|---|---|---|---|---|---|---|---|---|---|---|---|---|---|---|---|
| | | | | | | Rec | Nonrecurring | | Nonrecurring Disconnect | | OSS Rates($) | | | | | |
| | | | | | | | First | Add'l | First | Add'l | SOMEC | SOMAN | SOMAN | SOMAN | SOMAN | SOMAN |
| | Wholesale to UNE Switch-As-Is Charge | | | U1TD1 | UNCCC | | 5.63 | 5.63 | 7.20 | 7.20 | | | | | | |
| | Interoffice Channel - Dedicated Transport - DS3 - Per Mile per month | | | U1TD3 | 1L5XX | 4.76 | | | | | | | | | | |
| | Interoffice Channel - Dedicated Transport - DS3 - Facility Termination per month | | | U1TD3 | U1TF3 | 641.90 | 280.37 | 163.70 | 62.08 | 60.29 | | | | | | |
| | Wholesale to UNE Switch-As-Is Charge | | | U1TD3 | UNCCC | | 5.63 | 5.63 | 7.20 | 7.20 | | | | | | |
| | Interoffice Channel - Dedicated Transport - STS-1 - Per Mile per month | | | U1TS1 | 1L5XX | 4.76 | | | | | | | | | | |
| | Interoffice Channel - Dedicated Transport - STS-1 - Facility Termination | | | U1TS1 | U1TFS | 644.21 | 280.37 | 163.70 | 62.08 | 60.29 | | | | | | |
| | Wholesale to UNE Switch-As-Is Charge | | | U1TS1 | UNCCC | | 5.63 | 5.63 | 7.20 | 7.20 | | | | | | |
| | **UNBUNDLED DARK FIBER** | | | | | | | | | | | | | | | |
| | Dark Fiber, Per Four Fiber Strands, Per Route Mile Or Fraction Thereof - Interoffice Transport | | | UDF, UDFCX | 1L5DF | 28.27 | 642.79 | 138.67 | 326.97 | 203.85 | | | | | | |
| **911 PBX LOCATE** | | | | | | | | | | | | | | | | |
| | **911 PBX LOCATE DATABASE CAPABILITY** | | | | | | | | | | | | | | | |
| | Service Establishment per CLEC per End User Account | | | 9PBDC | 9PBEU | | 1,822.00 | | | | | | | | | |
| | Changes to TN Range or Customer Profile | | | 9PBDC | 9PBTN | | 182.29 | | | | | | | | | |
| | Per Telephone Number (Monthly) | | | 9PBDC | 9PBMM | 0.07 | | | | | | | | | | |
| | Change Company (Service Provider) ID | | | 9PBDC | 9PBPC | | 535.11 | | | | | | | | | |
| | PBX Locate Service Support per CLEC (MonthIt) | | | 9PBDC | 9PBMR | 178.43 | | | | | | | | | | |
| | Service Order Charge | | | 9PBDC | 9PBSC | | 15.75 | | | | | | | | | |
| | **911 PBX LOCATE TRANSPORT COMPONENT** | | | | | | | | | | | | | | | |
| | **See Att 3** | | | | | | | | | | | | | | | |
| **ENHANCED EXTENDED LINK (EELs)** | | | | | | | | | | | | | | | | |
| | **NOTE: The monthly recurring and non-recurring charges below will apply and the Switch-As-Is Charge will not apply for UNE combinations provisioned as ' Ordinarily Combined' Network Elements.** | | | | | | | | | | | | | | | |
| | **NOTE: The monthly recurring and the Switch-As-Is Charge and not the non-recurring charges below will apply for UNE combinations provisioned as ' Currently Combined' Network Elements.** | | | | | | | | | | | | | | | |
| | **EXTENTED 2-WIRE VOICE GRADE EXTENDED LOOP WITH DEDICATED DS1 INTEROFFICE TRANSPORT** | | | | | | | | | | | | | | | |
| | First 2-Wire VG Loop (SL2) in Combination - Zone 1 | | 1 | UNCVX | UEAL2 | 14.47 | 105.96 | 68.28 | 52.82 | 10.37 | | | | | | |
| | First 2-Wire VG Loop (SL2) in Combination - Zone 2 | | 2 | UNCVX | UEAL2 | 19.32 | 105.96 | 68.28 | 52.82 | 10.37 | | | | | | |
| | First 2-Wire VG Loop (SL2) in Combination - Zone 3 | | 3 | UNCVX | UEAL2 | 28.13 | 105.96 | 68.28 | 52.82 | 10.37 | | | | | | |
| | First 2-Wire VG Loop (SL2) in Combination - Zone 4 | | 4 | UNCVX | UEAL2 | 46.30 | 105.96 | 68.28 | 52.82 | 10.37 | | | | | | |
| | Interoffice Transport - Dedicated - DS1 combination - Per Mile per month | | | UNC1X | 1L5XX | 0.1813 | | | | | | | | | | |
| | Interoffice Transport - Dedicated - DS1 combination - Facility Termination per month | | | UNC1X | U1TF1 | 51.72 | 89.79 | 82.28 | 16.86 | 14.90 | | | | | | |
| | 1/0 Channelization System in combination Per Month | | | UNC1X | MQ1 | 102.85 | 91.57 | 62.94 | 10.87 | 10.10 | | | | | | |
| | Voice Grade COCI - Per Month | | | UNCVX | 1D1VG | 0.5737 | 6.62 | 4.74 | | | | | | | | |
| | Each Additional 2-Wire VG Loop (SL 2) in Combination - Zone 1 | | 1 | UNCVX | UEAL2 | 14.47 | 105.96 | 68.28 | 52.82 | 10.37 | | | | | | |
| | Each Additional 2-Wire VG Loop (SL 2) in Combination - Zone 2 | | 2 | UNCVX | UEAL2 | 19.32 | 105.96 | 68.28 | 52.82 | 10.37 | | | | | | |
| | Each Additional 2-Wire VG Loop (SL 2) in Combination - Zone 3 | | 3 | UNCVX | UEAL2 | 28.13 | 105.96 | 68.28 | 52.82 | 10.37 | | | | | | |
| | Each Additional 2-Wire VG Loop (SL 2) in Combination - Zone 4 | | 4 | UNCVX | UEAL2 | 46.30 | 105.96 | 68.28 | 52.82 | 10.37 | | | | | | |
| | Voice Grade COCI - Per Month | | | UNCVX | 1D1VG | 0.5737 | 6.62 | 4.74 | | | | | | | | |
| | Wholesale to UNE, Switch-As-Is Charge | | | UNC1X | UNCCC | | 5.63 | 5.63 | 7.20 | 7.20 | | | | | | |
| | **EXTENDED 4-WIRE VOICE GRADE EXTENDED LOOP WITH DEDICATED DS1 INTEROFFICE TRANSPORT** | | | | | | | | | | | | | | | |
| | First 4-Wire Analog Voice Grade Loop in Combination - Zone 1 | | 1 | UNCVX | UEAL4 | 28.04 | 132.27 | 94.59 | 60.68 | 14.64 | | | | | | |
| | First 4-Wire Analog Voice Grade Loop in Combination - Zone 2 | | 2 | UNCVX | UEAL4 | 38.84 | 132.27 | 94.59 | 60.68 | 14.64 | | | | | | |
| | First 4-Wire Analog Voice Grade Loop in Combination - Zone 3 | | 3 | UNCVX | UEAL4 | 50.60 | 132.27 | 94.59 | 60.68 | 14.64 | | | | | | |
| | First 4-Wire Analog Voice Grade Loop in Combination - Zone 4 | | 4 | UNCVX | UEAL4 | 50.60 | 132.27 | 94.59 | 60.68 | 14.64 | | | | | | |
| | Interoffice Transport - Dedicated - DS1 combination - Per Mile Per Month | | | UNC1X | 1L5XX | 0.1813 | | | | | | | | | | |

| CATEGORY | | RATE ELEMENTS | Interim | Zone | BCS | USOC | RATES($) | | | | | Svc Order Submitted Elec per LSR | Svc Order Submitted Manually per LSR | Incremental Charge - Manual Svc Order vs. Electronic-1st | Incremental Charge - Manual Svc Order vs. Electronic-Add'l | Incremental Charge - Manual Svc Order vs. Electronic-Disc 1st | Incremental Charge - Manual Svc Order vs. Electronic-Disc Add'l |
|---|---|---|---|---|---|---|---|---|---|---|---|---|---|---|---|---|---|
| | | | | | | | Rec | Nonrecurring | | Nonrecurring Disconnect | | OSS Rates($) | | | | | |
| | | | | | | | | First | Add'l | First | Add'l | SOMEC | SOMAN | SOMAN | SOMAN | SOMAN | SOMAN |
| | | Interoffice Transport - Dedicated - DS1 - Facility Termination Per Month | | | UNC1X | U1TF1 | 51.72 | 89.79 | 82.28 | 16.86 | 14.90 | | | | | | |
| | | 1/0 Channel System in combination Per Month | | | UNC1X | MQ1 | 102.85 | 91.57 | 62.94 | 10.87 | 10.10 | | | | | | |
| | | Voice Grade COCI in combination - per month | | | UNCVX | 1D1VG | 0.5737 | 6.62 | 4.74 | | | | | | | | |
| | | Additional 4-Wire Analog Voice Grade Loop in same DS1 Interoffice Transport Combination - Zone 1 | | 1 | UNCVX | UEAL4 | 28.04 | 132.27 | 94.59 | 60.68 | 14.64 | | | | | | |
| | | Additional 4-Wire Analog Voice Grade Loop in same DS1 Interoffice Transport Combination - Zone 2 | | 2 | UNCVX | UEAL4 | 38.84 | 132.27 | 94.59 | 60.68 | 14.64 | | | | | | |
| | | Additional 4-Wire Analog Voice Grade Loop in same DS1 Interoffice Transport Combination - Zone 3 | | 3 | UNCVX | UEAL4 | 50.60 | 132.27 | 94.59 | 60.68 | 14.64 | | | | | | |
| | | Additional 4-Wire Analog Voice Grade Loop in same DS1 Interoffice Transport Combination - Zone 4 | | 4 | UNCVX | UEAL4 | 50.60 | 132.27 | 94.59 | 60.68 | 14.64 | | | | | | |
| | | Additional Voice Grade COCI in combination - per month | | | UNCVX | 1D1VG | 0.5737 | 6.62 | 4.74 | | | | | | | | |
| | | Wholesale to UNE, Switch-As-Is Charge | | | UNC1X | UNCCC | | 5.63 | 5.63 | 7.20 | 7.20 | | | | | | |
| | EXTENDED 4-WIRE 56 KBPS EXTENDED DIGITAL LOOP WITH DEDICATED DS1 INTEROFFICE TRANSPORT | | | | | | | | | | | | | | | | |
| | | First 4-Wire 56Kbps Digital Grade Loop in Combination - Zone 1 | | 1 | UNCDX | UDL56 | 28.65 | 126.53 | 88.85 | 60.68 | 14.64 | | | | | | |
| | | First 4-Wire 56Kbps Digital Grade Loop in Combination - Zone 2 | | 2 | UNCDX | UDL56 | 35.76 | 126.53 | 88.85 | 60.68 | 14.64 | | | | | | |
| | | First 4-Wire 56Kbps Digital Grade Loop in Combination - Zone 3 | | 3 | UNCDX | UDL56 | 41.99 | 126.53 | 88.85 | 60.68 | 14.64 | | | | | | |
| | | First 4-Wire 56Kbps Digital Grade Loop in Combination - Zone 4 | | 4 | UNCDX | UDL56 | 33.48 | 126.53 | 88.85 | 60.68 | 14.64 | | | | | | |
| | | Interoffice Transport - Dedicated - DS1 combination - Per Mile Per Month | | | UNC1X | 1L5XX | 0.1813 | | | | | | | | | | |
| | | Interoffice Transport - Dedicated - DS1 - combination Facility Termination Per Month | | | UNC1X | U1TF1 | 51.72 | 89.79 | 82.28 | 16.86 | 14.90 | | | | | | |
| | | 1/0 Channel System in combination Per Month | | | UNC1X | MQ1 | 102.85 | 91.57 | 62.94 | 10.87 | 10.10 | | | | | | |
| | | OCU-DP COCI (data) per month (2.4-64kbs) | | | UNCDX | 1D1DD | 1.22 | 6.62 | 4.74 | 0.00 | 0.00 | | | | | | |
| | | Additional 4-Wire 56Kbps Digital Grade Loop in same DS1 Interoffice Transport Combination - Zone 1 | | 1 | UNCDX | UDL56 | 28.65 | 126.53 | 88.85 | 60.68 | 14.64 | | | | | | |
| | | Additional 4-Wire 56Kbps Digital Grade Loop in same DS1 Interoffice Transport Combination - Zone 2 | | 2 | UNCDX | UDL56 | 35.76 | 126.53 | 88.85 | 60.68 | 14.64 | | | | | | |
| | | Additional 4-Wire 56Kbps Digital Grade Loop in same DS1 Interoffice Transport Combination - Zone 3 | | 3 | UNCDX | UDL56 | 41.99 | 126.53 | 88.85 | 60.68 | 14.64 | | | | | | |
| | | Additional 4-Wire 56Kbps Digital Grade Loop in same DS1 Interoffice Transport Combination - Zone 4 | | 4 | UNCDX | UDL56 | 33.48 | 126.53 | 88.85 | 60.68 | 14.64 | | | | | | |
| | | Additional OCU-DP COCI (data) - in combination per month (2.4-64kbs) | | | UNCDX | 1D1DD | 1.22 | 6.62 | 4.74 | 0.00 | 0.00 | | | | | | |
| | | Wholesale to UNE, Switch-As-Is Charge | | | UNC1X | UNCCC | | 5.63 | 5.63 | 7.20 | 7.20 | | | | | | |
| | EXTENDED 4-WIRE 64 KBPS EXTENDED DIGITAL LOOP WITH DEDICATED DS1 INTEROFFICE TRANSPORT | | | | | | | | | | | | | | | | |
| | | First 4-Wire 64Kbps Digital Grade Loop in Combination - Zone 1 | | 1 | UNCDX | UDL64 | 28.65 | 126.53 | 88.85 | 60.68 | 14.64 | | | | | | |
| | | First 4-Wire 64Kbps Digital Grade Loop in Combination - Zone 2 | | 2 | UNCDX | UDL64 | 35.76 | 126.53 | 88.85 | 60.68 | 14.64 | | | | | | |
| | | First 4-Wire 64Kbps Digital Grade Loop in Combination - Zone 3 | | 3 | UNCDX | UDL64 | 41.99 | 126.53 | 88.85 | 60.68 | 14.64 | | | | | | |
| | | First 4-Wire 64Kbps Digital Grade Loop in Combination - Zone 4 | | 4 | UNCDX | UDL64 | 33.48 | 126.53 | 88.85 | 60.68 | 14.64 | | | | | | |
| | | Interoffice Transport - Dedicated - DS1 combination - Per Mile Per Month | | | UNC1X | 1L5XX | 0.1813 | | | | | | | | | | |
| | | interoffice Transport - Dedicated - DS1 combination - Facility Termination Per Month | | | UNC1X | U1TF1 | 51.72 | 89.79 | 82.28 | 16.86 | 14.90 | | | | | | |
| | | 1/0 Channel System in combination Per Month | | | UNC1X | MQ1 | 102.85 | 91.57 | 62.94 | 10.87 | 10.10 | | | | | | |
| | | OCU-DP COCI (data) - in combination - per month (2.4-64kbs) | | | UNCDX | 1D1DD | 1.22 | 6.62 | 4.74 | 0.00 | 0.00 | | | | | | |
| | | Additional 4-Wire 64Kbps Digital Grade Loop in same DS1 Interoffice Transport Combination - Zone 1 | | 1 | UNCDX | UDL64 | 28.65 | 126.53 | 88.85 | 60.68 | 14.64 | | | | | | |
| | | Additional 4-Wire 64Kbps Digital Grade Loop in same DS1 Interoffice Transport Combination - Zone 2 | | 2 | UNCDX | UDL64 | 35.76 | 126.53 | 88.85 | 60.68 | 14.64 | | | | | | |

| CATEGORY | RATE ELEMENTS | Interim | Zone | BCS | USOC | RATES($) | | | | | Svc Order Submitted Elec per LSR | Svc Order Submitted Manually per LSR | Incremental Charge - Manual Svc Order vs. Electronic-1st | Incremental Charge - Manual Svc Order vs. Electronic-Add'l | Incremental Charge - Manual Svc Order vs. Electronic-Disc 1st | Incremental Charge - Manual Svc Order vs. Electronic-Disc Add'l |
|---|---|---|---|---|---|---|---|---|---|---|---|---|---|---|---|---|
| | | | | | | Rec | Nonrecurring | | Nonrecurring Disconnect | | OSS Rates($) | | | | | |
| | | | | | | | First | Add'l | First | Add'l | SOMEC | SOMAN | SOMAN | SOMAN | SOMAN | SOMAN |
| | Additional 4-Wire 64Kbps Digital Grade Loop in same DS1 Interoffice Transport Combination - Zone 3 | | 3 | UNCDX | UDL64 | 41.99 | 126.53 | 88.85 | 60.68 | 14.64 | | | | | | |
| | Additional 4-Wire 64Kbps Digital Grade Loop in same DS1 Interoffice Transport Combination - Zone 4 | | 4 | UNCDX | UDL64 | 33.48 | 126.53 | 88.85 | 60.68 | 14.64 | | | | | | |
| | Additional OCU-DP COCI (data) - in combination - per month (2.4-64kbs) | | | UNCDX | 1D1DD | 1.22 | 6.62 | 4.74 | 0.00 | 0.00 | | | | | | |
| | Wholesale to UNE, Switch-As-Is Charge | | | UNC1X | UNCCC | | 5.63 | 5.63 | 7.20 | 7.20 | | | | | | |
| | **EXTENDED 4-WIRE DS1 DIGITAL EXTENDED LOOP WITH DEDICATED DS1 INTEROFFICE TRANSPORT** | | | | | | | | | | | | | | | |
| | 4-Wire DS1 Digital Loop in Combination - Zone 1 | | 1 | UNC1X | USLXX | 79.08 | 253.93 | 158.45 | 46.10 | 12.07 | | | | | | |
| | 4-Wire DS1 Digital Loop in Combination - Zone 2 | | 2 | UNC1X | USLXX | 129.38 | 253.93 | 158.45 | 46.10 | 12.07 | | | | | | |
| | 4-Wire DS1 Digital Loop in Combination - Zone 3 | | 3 | UNC1X | USLXX | 206.74 | 253.93 | 158.45 | 46.10 | 12.07 | | | | | | |
| | 4-Wire DS1 Digital Loop in Combination - Zone 4 | | 4 | UNC1X | USLXX | 458.46 | 253.93 | 158.45 | 46.10 | 12.07 | | | | | | |
| | Interoffice Transport - Dedicated - DS1 combination - Per Mile Per Month | | | UNC1X | 1L5XX | 0.1813 | | | | | | | | | | |
| | Interoffice Transport - Dedicated - DS1 combination - Facility Termination Per Month | | | UNC1X | U1TF1 | 51.72 | 89.79 | 82.28 | 16.86 | 14.90 | | | | | | |
| | Wholesale to UNE, Switch-As-Is Charge | | | UNC1X | UNCCC | | 5.63 | 5.63 | 7.20 | 7.20 | | | | | | |
| | **EXTENDED 4-WIRE DS1 DIGITAL EXTENDED LOOP WITH DEDICATED DS3 INTEROFFICE TRANSPORT** | | | | | | | | | | | | | | | |
| | First DS1Loop in Combination - Zone 1 | | 1 | UNC1X | USLXX | 79.08 | 253.93 | 158.45 | 46.10 | 12.07 | | | | | | |
| | First DS1Loop in Combination - Zone 2 | | 2 | UNC1X | USLXX | 129.38 | 253.93 | 158.45 | 46.10 | 12.07 | | | | | | |
| | First DS1Loop in Combination - Zone 3 | | 3 | UNC1X | USLXX | 206.74 | 253.93 | 158.45 | 46.10 | 12.07 | | | | | | |
| | First DS1Loop in Combination - Zone 4 | | 4 | UNC1X | USLXX | 458.46 | 253.93 | 158.45 | 46.10 | 12.07 | | | | | | |
| | Interoffice Transport - Dedicated - DS3 combination - Per Mile Per Month | | | UNC3X | 1L5XX | 4.29 | | | | | | | | | | |
| | Interoffice Transport - Dedicated - DS3 - Facility Termination per month | | | UNC3X | U1TF3 | 641.90 | 280.37 | 163.70 | 62.08 | 60.29 | | | | | | |
| | 3/1Channel System in combination per month | | | UNC3X | MQ3 | 170.63 | 179.17 | 94.52 | 34.30 | 32.82 | | | | | | |
| | DS1 COCI in combination per month | | | UNC1X | UC1D1 | 2.62 | 6.62 | 4.74 | 0.00 | 0.00 | | | | | | |
| | Additional DS1Loop in DS3 Interoffice Transport Combination - Zone 1 | | 1 | UNC1X | USLXX | 79.08 | 253.93 | 158.45 | 46.10 | 12.07 | | | | | | |
| | Additional DS1Loop in DS3 Interoffice Transport Combination - Zone 2 | | 2 | UNC1X | USLXX | 129.38 | 253.93 | 158.45 | 46.10 | 12.07 | | | | | | |
| | Additional DS1Loop in DS3 Interoffice Transport Combination - Zone 3 | | 3 | UNC1X | USLXX | 206.74 | 253.93 | 158.45 | 46.10 | 12.07 | | | | | | |
| | Additional DS1Loop in DS3 Interoffice Transport Combination - Zone 4 | | 4 | UNC1X | USLXX | 458.46 | 253.93 | 158.45 | 46.10 | 12.07 | | | | | | |
| | Additoinal DS1 COCI in combination per month | | | UNC1X | UC1D1 | 2.62 | 6.62 | 4.74 | 0.00 | 0.00 | | | | | | |
| | Wholesale to UNE, Switch-As-Is Charge | | | UNC3X | UNCCC | | 5.63 | 5.63 | 7.20 | 7.20 | | | | | | |
| | **EXTENDED 2-WIRE VOICE GRADE EXTENDED LOOP/ 2 WIRE VOICE GRADE INTEROFFICE TRANSPORT** | | | | | | | | | | | | | | | |
| | 2-WireVG Loop in combination - Zone 1 | | 1 | UNCVX | UEAL2 | 14.47 | 105.96 | 68.28 | 52.82 | 10.37 | | | | | | |
| | 2-WireVG Loop in combination - Zone 2 | | 2 | UNCVX | UEAL2 | 19.32 | 105.96 | 68.28 | 52.82 | 10.37 | | | | | | |
| | 2-WireVG Loop in combination - Zone 3 | | 3 | UNCVX | UEAL2 | 28.13 | 105.96 | 68.28 | 52.82 | 10.37 | | | | | | |
| | 2-WireVG Loop in combination - Zone 4 | | 4 | UNCVX | UEAL2 | 46.30 | 105.96 | 68.28 | 52.82 | 10.37 | | | | | | |
| | Interoffice Transport - 2-wire VG - Dedicated- Per Mile Per Month | | | UNCVX | 1L5XX | 0.00088 | | | | | | | | | | |
| | Interoffice Transport - 2-wire VG - Dedicated - Facility Termination per month | | | UNCVX | U1TV2 | 20.32 | 40.77 | 27.57 | 17.26 | 7.11 | | | | | | |
| | Wholesale to UNE, Switch-As-Is Charge | | | UNCVX | UNCCC | | 5.63 | 5.63 | 7.20 | 7.20 | | | | | | |
| | **EXTENDED 4-WIRE VOICE GRADE EXTENDED LOOP/ 4 WIRE VOICE GRADE INTEROFFICE TRANSPORT** | | | | | | | | | | | | | | | |
| | 4-WireVG Loop in combination - Zone 1 | | 1 | UNCVX | UEAL4 | 28.04 | 132.27 | 94.59 | 60.68 | 14.64 | | | | | | |
| | 4-WireVG Loop in combination - Zone 2 | | 2 | UNCVX | UEAL4 | 38.84 | 132.27 | 94.59 | 60.68 | 14.64 | | | | | | |
| | 4-WireVG Loop in combination - Zone 3 | | 3 | UNCVX | UEAL4 | 50.60 | 132.27 | 94.59 | 60.68 | 14.64 | | | | | | |
| | 4-WireVG Loop in combination - Zone 4 | | 4 | UNCVX | UEAL4 | 50.60 | 132.27 | 94.59 | 60.68 | 14.64 | | | | | | |
| | Interoffice Transport - 4-wire VG - Dedicated - Per Mile Per Month | | | UNCVX | 1L5XX | 0.00088 | | | | | | | | | | |
| | Interoffice Transport - 4-wire VG - Dedicated - Facility Termination per month | | | UNCVX | U1TV4 | 17.86 | 40.77 | 27.57 | 17.26 | 7.11 | | | | | | |
| | Wholesale to UNE, Switch-As-Is Charge | | | UNCVX | UNCCC | | 5.63 | 5.63 | 7.20 | 7.20 | | | | | | |
| | **EXTENDED DS3 DIGITAL EXTENDED LOOP WITH DEDICATED DS3 INTEROFFICE TRANSPORT** | | | | | | | | | | | | | | | |

| CATEGORY | RATE ELEMENTS | Interim | Zone | BCS | USOC | RATES($) | | | | | Svc Order Submitted Elec per LSR | Svc Order Submitted Manually per LSR | Incremental Charge - Manual Svc Order vs. Electronic-1st | Incremental Charge - Manual Svc Order vs. Electronic-Add'l | Incremental Charge - Manual Svc Order vs. Electronic-Disc 1st | Incremental Charge - Manual Svc Order vs. Electronic-Disc Add'l |
|---|---|---|---|---|---|---|---|---|---|---|---|---|---|---|---|---|
| | | | | | | Rec | Nonrecurring | | Nonrecurring Disconnect | | OSS Rates($) | | | | | |
| | | | | | | | First | Add'l | First | Add'l | SOMEC | SOMAN | SOMAN | SOMAN | SOMAN | SOMAN |
| | DS3 Local Loop in combination - per mile per month | | | UNC3X | 1L5ND | 11.20 | | | | | | | | | | |
| | DS3 Local Loop in combination - Facility Termination per month | | | UNC3X | UE3PX | 252.17 | 454.13 | 265.47 | 123.23 | 86.19 | | | | | | |
| | Interoffice Transport - Dedicated - DS3 - Per Mile per month | | | UNC3X | 1L5XX | 4.29 | | | | | | | | | | |
| | Interoffice Transport - Dedicated - DS3 combination - Facility Termination per month | | | UNC3X | U1TF3 | 641.90 | 280.37 | 163.70 | 62.08 | 60.29 | | | | | | |
| | Wholesale to UNE, Switch-As-Is Charge | | | UNC3X | UNCCC | | 5.63 | 5.63 | 7.20 | 7.20 | | | | | | |
| | **EXTENDED STS-1 DIGITAL EXTENDED LOOP WITH DEDICATED STS-1 INTEROFFICE TRANSPORT** | | | | | | | | | | | | | | | |
| | STS-1 Local Lolp in combination - per mile per month | | | UNCSX | 1L5ND | 11.20 | | | | | | | | | | |
| | STS-1 Local Loop in combination - Facility Termination per month | | | UNCSX | UDLS1 | 264.35 | 454.13 | 265.47 | 123.23 | 86.19 | | | | | | |
| | Interoffice Transport - Dedicated - STS-1 combination - per mile per month | | | UNCSX | 1L5XX | 4.29 | | | | | | | | | | |
| | Interoffice Transport - Dedicated - STS-1 combination - Facility Termination per month | | | UNCSX | U1TFS | 644.21 | 280.37 | 163.70 | 62.08 | 60.29 | | | | | | |
| | Wholesale to UNE, Switch-As-Is Charge | | | UNCSX | UNCCC | | 5.63 | 5.63 | 7.20 | 7.20 | | | | | | |
| | **EXTENDED 2-WIRE ISDN EXTENDED LOOP WITH DS1 INTEROFFICE TRANSPORT** | | | | | | | | | | | | | | | |
| | First 2-Wire ISDN Loop in Combination - Zone 1 | | 1 | UNCNX | U1L2X | 21.01 | 117.61 | 79.92 | 52.82 | 10.37 | | | | | | |
| | First 2-Wire ISDN Loop in Combination - Zone 2 | | 2 | UNCNX | U1L2X | 27.59 | 117.61 | 79.92 | 52.82 | 10.37 | | | | | | |
| | First 2-Wire ISDN Loop in Combination - Zone 3 | | 3 | UNCNX | U1L2X | 37.34 | 117.61 | 79.92 | 52.82 | 10.37 | | | | | | |
| | First 2-Wire ISDN Loop in Combination - Zone 4 | | 4 | UNCNX | U1L2X | 59.18 | 117.61 | 79.92 | 52.82 | 10.37 | | | | | | |
| | Interoffice Transport - Dedicated - DS1 combination - per mile per month | | | UNC1X | 1L5XX | 0.1813 | | | | | | | | | | |
| | Interoffice Transport - Dedicated - DS1 combination - Facility Termination per month | | | UNC1X | U1TF1 | 51.72 | 89.79 | 82.28 | 16.86 | 14.90 | | | | | | |
| | 1/0 Channel System in combination - per month | | | UNC1X | MQ1 | 102.85 | 91.57 | 62.94 | 10.87 | 10.10 | | | | | | |
| | 2-wire ISDN COCI (BRITE) - in combination - per month | | | UNCNX | UC1CA | 2.62 | 6.62 | 4.74 | 0.00 | 0.00 | | | | | | |
| | Additional 2-wire ISDN Loop in same DS1Interoffice Transport Combination - Zone 1 | | 1 | UNCNX | U1L2X | 21.01 | 117.61 | 79.92 | 52.82 | 10.37 | | | | | | |
| | Additional 2-wire ISDN Loop in same DS1Interoffice Transport Combination - Zone 2 | | 2 | UNCNX | U1L2X | 27.59 | 117.61 | 79.92 | 52.82 | 10.37 | | | | | | |
| | Additional 2-wire ISDN Loop in same DS1Interoffice Transport Combination - Zone 3 | | 3 | UNCNX | U1L2X | 37.34 | 117.61 | 79.92 | 52.82 | 10.37 | | | | | | |
| | Additional 2-wire ISDN Loop in same DS1Interoffice Transport Combination - Zone 4 | | 4 | UNCNX | U1L2X | 59.18 | 117.61 | 79.92 | 52.82 | 10.37 | | | | | | |
| | Additional 2-wire ISDN COCI (BRITE) - in combination- per month | | | UNCNX | UC1CA | 2.62 | 6.62 | 4.74 | 0.00 | 0.00 | | | | | | |
| | Wholesale to UNE, Switch-As-Is Charge | | | UNC1X | UNCCC | | 5.63 | 5.63 | 7.20 | 7.20 | | | | | | |
| | **EXTENDED 4-WIRE DS1 DIGITAL EXTENDED LOOP WITH DEDICATED STS-1 INTEROFFICE TRANSPORT** | | | | | | | | | | | | | | | |
| | First DS1 Loop Combination - Zone 1 | | 1 | UNC1X | USLXX | 79.08 | 253.93 | 158.45 | 46.10 | 12.07 | | | | | | |
| | First DS1 Loop Combination - Zone 2 | | 2 | UNC1X | USLXX | 129.38 | 253.93 | 158.45 | 46.10 | 12.07 | | | | | | |
| | First DS1 Loop Combination - Zone 3 | | 3 | UNC1X | USLXX | 206.74 | 253.93 | 158.45 | 46.10 | 12.07 | | | | | | |
| | First DS1 Loop Combination - Zone 4 | | 4 | UNC1X | USLXX | 458.46 | 253.93 | 158.45 | 46.10 | 12.07 | | | | | | |
| | Interoffice Transport - Dedicated - STS-1 combination - Per Mile Per Month | | | UNCSX | 1L5XX | 4.29 | | | | | | | | | | |
| | Interoffice Transport - Dedicated - STS-1 combination - Facility Termination per month | | | UNCSX | U1TFS | 644.21 | 280.37 | 163.70 | 62.08 | 60.29 | | | | | | |
| | 3/1 Channel System in combination per month | | | UNCSX | MQ3 | 170.63 | 179.17 | 94.52 | 34.30 | 32.82 | | | | | | |
| | DS1 COCI in combination per month | | | UNC1X | UC1D1 | 2.62 | 6.62 | 4.74 | 0.00 | 0.00 | | | | | | |
| | Additional DS1Loop in the same STS-1 Interoffice Transport Combination - Zone 1 | | 1 | UNC1X | USLXX | 79.08 | 253.93 | 158.45 | 46.10 | 12.07 | | | | | | |
| | Additional DS1Loop in the same STS-1 Interoffice Transport Combination - Zone 2 | | 2 | UNC1X | USLXX | 129.38 | 253.93 | 158.45 | 46.10 | 12.07 | | | | | | |
| | Additional DS1Loop in the same STS-1 Interoffice Transport Combination - Zone 3 | | 3 | UNC1X | USLXX | 206.74 | 253.93 | 158.45 | 46.10 | 12.07 | | | | | | |
| | Additional DS1Loop in the same STS-1 Interoffice Transport Combination - Zone 4 | | 4 | UNC1X | USLXX | 458.46 | 253.93 | 158.45 | 46.10 | 12.07 | | | | | | |
| | DS1 COCI in combination per month | | | UNC1X | UC1D1 | 2.62 | 6.62 | 4.74 | 0.00 | 0.00 | | | | | | |
| | Wholesale to UNE, Switch-As-Is Charge | | | UNCSX | UNCCC | | 5.63 | 5.63 | 7.20 | 7.20 | | | | | | |

| CATEGORY | RATE ELEMENTS | Interim | Zone | BCS | USOC | RATES($) | | | | | Svc Order Submitted Elec per LSR | Svc Order Submitted Manually per LSR | Incremental Charge - Manual Svc Order vs. Electronic-1st | Incremental Charge - Manual Svc Order vs. Electronic-Add'l | Incremental Charge - Manual Svc Order vs. Electronic-Disc 1st | Incremental Charge - Manual Svc Order vs. Electronic-Disc Add'l |
|---|---|---|---|---|---|---|---|---|---|---|---|---|---|---|---|---|
| | | | | | | Rec | Nonrecurring | | Nonrecurring Disconnect | | OSS Rates($) | | | | | |
| | | | | | | | First | Add'l | First | Add'l | SOMEC | SOMAN | SOMAN | SOMAN | SOMAN | SOMAN |
| | **EXTENDED 4-WIRE 56 KBPS DIGITAL EXTENDED LOOP WITH 56 KBPS INTEROFFICE TRANSPORT** | | | | | | | | | | | | | | | |
| | 4-wire 56 kbps Local Loop in combination - Zone 1 | | 1 | UNCDX | UDL56 | 28.65 | 126.53 | 88.85 | 60.68 | 14.64 | | | | | | |
| | 4-wire 56 kbps Local Loop in combination - Zone 2 | | 2 | UNCDX | UDL56 | 35.76 | 126.53 | 88.85 | 60.68 | 14.64 | | | | | | |
| | 4-wire 56 kbps Local Loop in combination - Zone 3 | | 3 | UNCDX | UDL56 | 41.99 | 126.53 | 88.85 | 60.68 | 14.64 | | | | | | |
| | 4-wire 56 kbps Local Loop in combination - Zone 4 | | 4 | UNCDX | UDL56 | 33.48 | 126.53 | 88.85 | 60.68 | 14.64 | | | | | | |
| | Interoffice Transport - Dedicated - 4-wire 56 kbps combination - Per Mile per month | | | UNCDX | 1L5XX | 0.0088 | | | | | | | | | | |
| | Interoffice Transport - Dedicated - 4-wire 56 kbps combination - Facility Termination per month | | | UNCDX | U1TD5 | 22.52 | 40.78 | 27.57 | 17.26 | 7.11 | | | | | | |
| | Wholesale to UNE, Switch-As-Is Charge | | | UNCDX | UNCCC | | 5.63 | 5.63 | 7.20 | 7.20 | | | | | | |
| | **EXTENDED 4-WIRE 64 KBPS DIGITAL EXTENDED LOOP WITH 64 KBPS INTEROFFICE TRANSPORT** | | | | | | | | | | | | | | | |
| | 4-wire 64 kbps Lcoal Loop in Combination - Zone 1 | | 1 | UNCDX | UDL64 | 28.65 | 126.53 | 88.85 | 60.68 | 14.64 | | | | | | |
| | 4-wire 64 kbps Lcoal Loop in Combination - Zone 2 | | 2 | UNCDX | UDL64 | 35.76 | 126.53 | 88.85 | 60.68 | 14.64 | | | | | | |
| | 4-wire 64 kbps Lcoal Loop in Combination - Zone 3 | | 3 | UNCDX | UDL64 | 41.99 | 126.53 | 88.85 | 60.68 | 14.64 | | | | | | |
| | 4-wire 64 kbps Lcoal Loop in Combination - Zone 4 | | 4 | UNCDX | UDL64 | 33.48 | 126.53 | 88.85 | 60.68 | 14.64 | | | | | | |
| | Interoffice Transport - Dedicated - 4-wire 64 kbps combination - Per Mile per month | | | UNCDX | 1L5XX | 0.0088 | | | | | | | | | | |
| | Interoffice Transport - Dedicated - 4-wire 64 kbps combination - Facility Termination per month | | | UNCDX | U1TD6 | 22.52 | 40.78 | 27.57 | 17.26 | 7.11 | | | | | | |
| | Wholesale to UNE, Switch-As-Is Charge | | | UNCDX | UNCCC | | 5.63 | 5.63 | 7.20 | 7.20 | | | | | | |
| | **EXTENDED 2-WIRE VOICE GRADE LOOP WITH DS1 INTEROFFICE TRANSPORT w/ 3/1 MUX** | | | | | | | | | | | | | | | |
| | First 2-wire VG Loop (SL2) in Combination - Zone 1 | | 1 | UNCVX | UEAL2 | 14.47 | 105.96 | 68.28 | 52.82 | 10.37 | | | | | | |
| | First 2-wire VG Loop (SL2) in Combination - Zone 2 | | 2 | UNCVX | UEAL2 | 19.32 | 105.96 | 68.28 | 52.82 | 10.37 | | | | | | |
| | First 2-wire VG Loop (SL2) in Combination - Zone 3 | | 3 | UNCVX | UEAL2 | 28.13 | 105.96 | 68.28 | 52.82 | 10.37 | | | | | | |
| | First 2-wire VG Loop (SL2) in Combination - Zone 4 | | 4 | UNCVX | UEAL2 | 46.30 | 105.96 | 68.28 | 52.82 | 10.37 | | | | | | |
| | First Interoffice Transport - Dedicated - DS1 combination - Per Mile | | | UNC1X | 1L5XX | 0.1813 | | | | | | | | | | |
| | First Interoffice Transport - Dedicated - DS1 combination - Facility Termination per month | | | UNC1X | U1TF1 | 51.72 | 89.79 | 82.28 | 16.86 | 14.90 | | | | | | |
| | Per each DS1 Channelization System Per Month | | | UNC1X | MQ1 | 102.85 | 91.57 | 62.94 | 10.87 | 10.10 | | | | | | |
| | Per each Voice Grade COCI - Per Month per month | | | UNCVX | 1D1VG | 0.5737 | 6.62 | 4.74 | | | | | | | | |
| | 3/1 Channel System in combination per month | | | UNC3X | MQ3 | 170.63 | 179.17 | 94.52 | 34.30 | 32.82 | | | | | | |
| | Per each DS1 COCI in combination per month | | | UNC1X | UC1D1 | 2.62 | 6.62 | 4.74 | 0.00 | 0.00 | | | | | | |
| | Each Additional 2-Wire VG Loop(SL 2) in the same DS1 Interoffice Transport Combination - Zone 1 | | 1 | UNCVX | UEAL2 | 14.47 | 105.96 | 68.28 | 52.82 | 10.37 | | | | | | |
| | Each Additional 2-Wire VG Loop(SL2) in the same DS1 Interoffice Transport Combination - Zone 2 | | 2 | UNCVX | UEAL2 | 19.32 | 105.96 | 68.28 | 52.82 | 10.37 | | | | | | |
| | Each Additional 2-Wire VG Loop(SL2) in the same DS1 Interoffice Transport Combination - Zone 3 | | 3 | UNCVX | UEAL2 | 28.13 | 105.96 | 68.28 | 52.82 | 10.37 | | | | | | |
| | Each Additional 2-Wire VG Loop(SL2) in the same DS1 Interoffice Transport Combination - Zone 4 | | 4 | UNCVX | UEAL2 | 46.30 | 105.96 | 68.28 | 52.82 | 10.37 | | | | | | |
| | Each Additional Voice Grade COCI in combination - per month | | | UNCVX | 1D1VG | 0.5737 | 6.62 | 4.74 | | | | | | | | |
| | Each Additional DS1 Interoffice Channel per mile in same 3/1 Channel System per month | | | UNC1X | 1L5XX | 0.1813 | | | | | | | | | | |
| | Each Additional DS1 Interoffice Channel Facility Termination in same 3/1 Channel System per month | | | UNC1X | U1TF1 | 51.72 | 89.79 | 82.28 | 16.86 | 14.90 | | | | | | |
| | Each Additional DS1 COCI combination per month | | | UNC1X | UC1D1 | 2.62 | 6.62 | 4.74 | 0.00 | 0.00 | | | | | | |
| | Wholesale to UNE, Switch-As-Is Charge | | | UNC1X | UNCCC | | 5.63 | 5.63 | 7.20 | 7.20 | | | | | | |
| | **EXTENDED 4-WIRE VOICE GRADE LOOP WITH DEDICATED DS1 INTEROFFICE TRANSPORT w/ 3/1 MUX** | | | | | | | | | | | | | | | |
| | First 4-Wire Analog Voice Grade Local Loop in Combination - Zone 1 | | 1 | UNCVX | UEAL4 | 28.04 | 132.27 | 94.59 | 60.68 | 14.64 | | | | | | |
| | First 4-Wire Analog Voice Grade Local Loop in Combination - Zone 2 | | 2 | UNCVX | UEAL4 | 38.84 | 132.27 | 94.59 | 60.68 | 14.64 | | | | | | |
| | First 4-Wire Analog Voice Grade Local Loop in Combination - Zone 3 | | 3 | UNCVX | UEAL4 | 50.60 | 132.27 | 94.59 | 60.68 | 14.64 | | | | | | |
| | First 4-Wire Analog Voice Grade Local Loop in Combination - Zone 4 | | 4 | UNCVX | UEAL4 | 50.60 | 132.27 | 94.59 | 60.68 | 14.64 | | | | | | |
| | First Interoffice Transport - Dedicated - DS1 combination - Per Mile Per Month | | | UNC1X | 1L5XX | 0.1813 | | | | | | | | | | |

| CATEGORY | | RATE ELEMENTS | Interim | Zone | BCS | USOC | RATES($) | | | | | Svc Order Submitted Elec per LSR | Svc Order Submitted Manually per LSR | Incremental Charge - Manual Svc Order vs. Electronic-1st | Incremental Charge - Manual Svc Order vs. Electronic-Add'l | Incremental Charge - Manual Svc Order vs. Electronic-Disc 1st | Incremental Charge - Manual Svc Order vs. Electronic-Disc Add'l |
|---|---|---|---|---|---|---|---|---|---|---|---|---|---|---|---|---|---|
| | | | | | | | Rec | Nonrecurring | | Nonrecurring Disconnect | | OSS Rates($) | | | | | |
| | | | | | | | | First | Add'l | First | Add'l | SOMEC | SOMAN | SOMAN | SOMAN | SOMAN | SOMAN |
| | | First Interoffice Transport - Dedicated - DS1 - Facility Termination Per Month | | | UNC1X | U1TF1 | 51.72 | 89.79 | 82.28 | 16.86 | 14.90 | | | | | | |
| | | Per each 1/0 Channel System in combination Per Month | | | UNC1X | MQ1 | 102.85 | 91.57 | 62.94 | 10.87 | 10.10 | | | | | | |
| | | Per each Voice Grade COCI in combination - per month | | | UNCVX | 1D1VG | 0.5737 | 6.62 | 4.74 | | | | | | | | |
| | | 3/1 Channel System in combination per month | | | UNC3X | MQ3 | 170.63 | 179.17 | 94.52 | 34.30 | 32.82 | | | | | | |
| | | Per each DS1 COCI in combination per month | | | UNC1X | UC1D1 | 2.62 | 6.62 | 4.74 | 0.00 | 0.00 | | | | | | |
| | | Additional 4-Wire Analog Voice Grade Loop in same DS1 Interoffice Transport Combination - Zone 1 | | 1 | UNCVX | UEAL4 | 28.04 | 132.27 | 94.59 | 60.68 | 14.64 | | | | | | |
| | | Additional 4-Wire Analog Voice Grade Loop in same DS1 Interoffice Transport Combination - Zone 2 | | 2 | UNCVX | UEAL4 | 38.84 | 132.27 | 94.59 | 60.68 | 14.64 | | | | | | |
| | | Additional 4-Wire Analog Voice Grade Loop in same DS1 Interoffice Transport Combination - Zone 3 | | 3 | UNCVX | UEAL4 | 50.60 | 132.27 | 94.59 | 60.68 | 14.64 | | | | | | |
| | | Additional 4-Wire Analog Voice Grade Loop in same DS1 Interoffice Transport Combination - Zone 4 | | 4 | UNCVX | UEAL4 | 50.60 | 132.27 | 94.59 | 60.68 | 14.64 | | | | | | |
| | | Each Additional DS1 Interoffice Channel per mile in same 3/1 Channel System per month | | | UNC1X | 1L5XX | 0.1813 | | | | | | | | | | |
| | | Each Additional DS1 Interoffice Channel Facility Termination in same 3/1 Channel System per month | | | UNC1X | U1TF1 | 51.72 | 89.79 | 82.28 | 16.86 | 14.90 | | | | | | |
| | | Additional Voice Grade COCI - in combination - per month | | | UNCVX | 1D1VG | 0.5737 | 6.62 | 4.74 | | | | | | | | |
| | | Wholesale to UNE, Switch-As-Is Charge | | | UNC1X | UNCCC | | 5.63 | 5.63 | 7.20 | 7.20 | | | | | | |
| | **EXTENDED 4-WIRE 56 KBPS DIGITAL LOOP WITH DEDICATED DS1 INTEROFFICE TRANSPORT w/ 3/1 MUX** | | | | | | | | | | | | | | | | |
| | | First 4-Wire 56Kbps Digital Grade Local Loop in Combination - Zone 1 | | 1 | UNCDX | UDL56 | 28.65 | 126.53 | 88.85 | 60.68 | 14.64 | | | | | | |
| | | First 4-Wire 56Kbps Digital Grade Local Loop in Combination - Zone 2 | | 2 | UNCDX | UDL56 | 35.76 | 126.53 | 88.85 | 60.68 | 14.64 | | | | | | |
| | | First 4-Wire 56Kbps Digital Grade Local Loop in Combination - Zone 3 | | 3 | UNCDX | UDL56 | 41.99 | 126.53 | 88.85 | 60.68 | 14.64 | | | | | | |
| | | First 4-Wire 56Kbps Digital Grade Local Loop in Combination - Zone 4 | | 4 | UNCDX | UDL56 | 33.48 | 126.53 | 88.85 | 60.68 | 14.64 | | | | | | |
| | | First Interoffice Transport - Dedicated - DS1 combination - Per Mile Per Month | | | UNC1X | 1L5XX | 0.1813 | | | | | | | | | | |
| | | First Interoffice Transport - Dedicated - DS1 - combination Facility Termination Per Month | | | UNC1X | U1TF1 | 51.72 | 89.79 | 82.28 | 16.86 | 14.90 | | | | | | |
| | | Per each 1/0 Channel System in combination Per Month | | | UNC1X | MQ1 | 102.85 | 91.57 | 62.94 | 10.87 | 10.10 | | | | | | |
| | | Per each OCU-DP COCI (data) COCI per month (2.4-64kbs) | | | UNCDX | 1D1DD | 1.22 | 6.62 | 4.74 | 0.00 | 0.00 | | | | | | |
| | | 3/1 Channel System in combination per month | | | UNC3X | MQ3 | 170.63 | 179.17 | 94.52 | 34.30 | 32.82 | | | | | | |
| | | Per each DS1 COCI in combination per month | | | UNC1X | UC1D1 | 2.62 | 6.62 | 4.74 | 0.00 | 0.00 | | | | | | |
| | | Additional 4-Wire 56Kbps Digital Grade Loop in same DS1 Interoffice Transport Combination - Zone 1 | | 1 | UNCDX | UDL56 | 28.65 | 126.53 | 88.85 | 60.68 | 14.64 | | | | | | |
| | | Additional 4-Wire 56Kbps Digital Grade Loop in same DS1 Interoffice Transport Combination - Zone 2 | | 2 | UNCDX | UDL56 | 35.76 | 126.53 | 88.85 | 60.68 | 14.64 | | | | | | |
| | | Additional 4-Wire 56Kbps Digital Grade Loop in same DS1 Interoffice Transport Combination - Zone 3 | | 3 | UNCDX | UDL56 | 41.99 | 126.53 | 88.85 | 60.68 | 14.64 | | | | | | |
| | | Additional 4-Wire 56Kbps Digital Grade Loop in same DS1 Interoffice Transport Combination - Zone 4 | | 4 | UNCDX | UDL56 | 33.48 | 126.53 | 88.85 | 60.68 | 14.64 | | | | | | |
| | | OCU-DP COCI (data) COCI in combination per month (2.4-64kbs) | | | UNCDX | 1D1DD | 1.22 | 6.62 | 4.74 | 0.00 | 0.00 | | | | | | |
| | | Each Additional DS1 Interoffice Channel per mile in same 3/1 Channel System per month | | | UNC1X | 1L5XX | 0.1813 | | | | | | | | | | |
| | | Each Additional DS1 Interoffice Channel Facility Termination in same 3/1 Channel System per month | | | UNC1X | U1TF1 | 51.72 | 89.79 | 82.28 | 16.86 | 14.90 | | | | | | |
| | | Each Additional DS1 COCI in the same 3/1 channel system combination per month | | | UNC1X | UC1D1 | 2.62 | 6.62 | 4.74 | 0.00 | 0.00 | | | | | | |
| | | Wholesale to UNE, Switch-As-Is Charge | | | UNC1X | UNCCC | | 5.63 | 5.63 | 7.20 | 7.20 | | | | | | |
| | **EXTENDED 4-WIRE 64 KBPS DIGITAL LOOP WITH DEDICATED DS1 INTEROFFICE TRANSPORT w/ 3/1 MUX** | | | | | | | | | | | | | | | | |
| | | First 4-Wire 64Kbps Digital Grade Loop in a DS1 Interoffice Transport Combination - Zone 1 | | 1 | UNCDX | UDL64 | 28.65 | 126.53 | 88.85 | 60.68 | 14.64 | | | | | | |
| | | First 4-Wire 64Kbps Digital Grade Loop in a DS1 Interoffice Transport Combination - Zone 2 | | 2 | UNCDX | UDL64 | 35.76 | 126.53 | 88.85 | 60.68 | 14.64 | | | | | | |

| CATEGORY | | RATE ELEMENTS | Interim | Zone | BCS | USOC | RATES($) | | | | | Svc Order Submitted Elec per LSR | Svc Order Submitted Manually per LSR | Incremental Charge - Manual Svc Order vs. Electronic-1st | Incremental Charge - Manual Svc Order vs. Electronic-Add'l | Incremental Charge - Manual Svc Order vs. Electronic-Disc 1st | Incremental Charge - Manual Svc Order vs. Electronic-Disc Add'l |
|---|---|---|---|---|---|---|---|---|---|---|---|---|---|---|---|---|---|
| | | | | | | | Rec | Nonrecurring | | Nonrecurring Disconnect | | OSS Rates($) | | | | | |
| | | | | | | | | First | Add'l | First | Add'l | SOMEC | SOMAN | SOMAN | SOMAN | SOMAN | SOMAN |
| | | First 4-Wire 64Kbps Digital Grade Loop in a DS1 Interoffice Transport Combination - Zone 3 | | 3 | UNCDX | UDL64 | 41.99 | 126.53 | 88.85 | 60.68 | 14.64 | | | | | | |
| | | First 4-Wire 64Kbps Digital Grade Loop in a DS1 Interoffice Transport Combination - Zone 4 | | 4 | UNCDX | UDL64 | 33.48 | 126.53 | 88.85 | 60.68 | 14.64 | | | | | | |
| | | First Interoffice Transport - Dedicated - DS1 combination - Per Mile Per Month | | | UNC1X | 1L5XX | 0.1813 | | | | | | | | | | |
| | | First Interoffice Transport - Dedicated - DS1 combination - Facility Termination Per Month | | | UNC1X | U1TF1 | 51.72 | 89.79 | 82.28 | 16.86 | 14.90 | | | | | | |
| | | Per each Channel System 1/0 in combination Per Month | | | UNC1X | MQ1 | 102.85 | 91.57 | 62.94 | 10.87 | 10.10 | | | | | | |
| | | Per each OCU-DP COCI (data) in combination - per month (2.4-64kbs) | | | UNCDX | 1D1DD | 1.22 | 6.62 | 4.74 | 0.00 | 0.00 | | | | | | |
| | | 3/1 Channel System in combination per month | | | UNC3X | MQ3 | 170.63 | 179.17 | 94.52 | 34.30 | 32.82 | | | | | | |
| | | Per each DS1 COCI in combination per month | | | UNC1X | UC1D1 | 2.62 | 6.62 | 4.74 | 0.00 | 0.00 | | | | | | |
| | | Additional 4-Wire 64Kbps Digital Grade Loop in same DS1 Interoffice Transport Combination - Zone 1 | | 1 | UNCDX | UDL64 | 28.65 | 126.53 | 88.85 | 60.68 | 14.64 | | | | | | |
| | | Additional 4-Wire 64Kbps Digital Grade Loop in same DS1 Interoffice Transport Combination - Zone 2 | | 2 | UNCDX | UDL64 | 35.76 | 126.53 | 88.85 | 60.68 | 14.64 | | | | | | |
| | | Additional 4-Wire 64Kbps Digital Grade Loop in same DS1 Interoffice Transport Combination - Zone 3 | | 3 | UNCDX | UDL64 | 41.99 | 126.53 | 88.85 | 60.68 | 14.64 | | | | | | |
| | | Additional 4-Wire 64Kbps Digital Grade Loop in same DS1 Interoffice Transport Combination - Zone 4 | | 4 | UNCDX | UDL64 | 33.48 | 126.53 | 88.85 | 60.68 | 14.64 | | | | | | |
| | | Additional OCU-DP COCI (data) - DS1 to DS0 Channel System combination - per month (2.4-64kbs) | | | UNCDX | 1D1DD | 1.22 | 6.62 | 4.74 | 0.00 | 0.00 | | | | | | |
| | | Each Additional DS1 Interoffice Channel per mile in same 3/1 Channel System per month | | | UNC1X | 1L5XX | 0.1813 | | | | | | | | | | |
| | | Each Additional DS1 Interoffice Channel Facility Termination in same 3/1 Channel System per month | | | UNC1X | U1TF1 | 51.72 | 89.79 | 82.28 | 16.86 | 14.90 | | | | | | |
| | | Each Additional DS1 COCI in the same 3/1 channel system combination per month | | | UNC1X | UC1D1 | 2.62 | 6.62 | 4.74 | 0.00 | 0.00 | | | | | | |
| | | Wholesale to UNE, Switch-As-Is Charge | | | UNC1X | UNCCC | | 5.63 | 5.63 | 7.20 | 7.20 | | | | | | |
| | **EXTENDED 2-WIRE ISDN LOOP WITH DS1 INTEROFFICE TRANSPORT w/ 3/1 MUX** | | | | | | | | | | | | | | | | |
| | | First 2-Wire ISDN Loop in a DS1 Interoffice Combination Transport - Zone 1 | | 1 | UNCNX | U1L2X | 21.01 | 117.61 | 79.92 | 52.82 | 10.37 | | | | | | |
| | | First 2-Wire ISDN Loop in a DS1 Interoffice Combination Transport - Zone 2 | | 2 | UNCNX | U1L2X | 27.59 | 117.61 | 79.92 | 52.82 | 10.37 | | | | | | |
| | | First 2-Wire ISDN Loop in a DS1 Interoffice Combination Transport - Zone 3 | | 3 | UNCNX | U1L2X | 37.34 | 117.61 | 79.92 | 52.82 | 10.37 | | | | | | |
| | | First 2-Wire ISDN Loop in a DS1 Interoffice Combination Transport - Zone 4 | | 4 | UNCNX | U1L2X | 59.18 | 117.61 | 79.92 | 52.82 | 10.37 | | | | | | |
| | | First Interoffice Transport - Dedicated - DS1 combination - Per Mile per month | | | UNC1X | 1L5XX | 0.1813 | | | | | | | | | | |
| | | First Interoffice Transport - Dedicated - DS1 combination - Facility Termination per month | | | UNC1X | U1TF1 | 51.72 | 89.79 | 82.28 | 16.86 | 14.90 | | | | | | |
| | | Per each Channel System 1/0 in combination - per month | | | UNC1X | MQ1 | 102.85 | 91.57 | 62.94 | 10.87 | 10.10 | | | | | | |
| | | Per each 2-wire ISDN COCI (BRITE) in combination - per month | | | UNCNX | UC1CA | 2.62 | 6.62 | 4.74 | 0.00 | 0.00 | | | | | | |
| | | 3/1 Channel System in combination per month | | | UNC3X | MQ3 | 170.63 | 179.17 | 94.52 | 34.30 | 32.82 | | | | | | |
| | | Per each DS1 COCI in combination per month | | | UNC1X | UC1D1 | 2.62 | 6.62 | 4.74 | 0.00 | 0.00 | | | | | | |
| | | Additional 2-wire ISDN Loop in same DS1Interoffice Transport Combination - Zone 1 | | 1 | UNCNX | U1L2X | 21.01 | 117.61 | 79.92 | 52.82 | 10.37 | | | | | | |
| | | Additional 2-wire ISDN Loop in same DS1Interoffice Transport Combination - Zone 2 | | 2 | UNCNX | U1L2X | 27.59 | 117.61 | 79.92 | 52.82 | 10.37 | | | | | | |
| | | Additional 2-wire ISDN Loop in same DS1Interoffice Transport Combination - Zone 3 | | 3 | UNCNX | U1L2X | 37.34 | 117.61 | 79.92 | 52.82 | 10.37 | | | | | | |
| | | Additional 2-wire ISDN Loop in same DS1Interoffice Transport Combination - Zone 4 | | 4 | UNCNX | U1L2X | 59.18 | 117.61 | 79.92 | 52.82 | 10.37 | | | | | | |
| | | Additional 2-wire ISDN COCI (BRITE) in same 1/0 channel system combination- per month | | | UNCNX | UC1CA | 2.62 | 6.62 | 4.74 | 0.00 | 0.00 | | | | | | |

| CATEGORY | RATE ELEMENTS | Interim | Zone | BCS | USOC | RATES($) | | | | | Svc Order Submitted Elec per LSR | Svc Order Submitted Manually per LSR | Incremental Charge - Manual Svc Order vs. Electronic-1st | Incremental Charge - Manual Svc Order vs. Electronic-Add'l | Incremental Charge - Manual Svc Order vs. Electronic-Disc 1st | Incremental Charge - Manual Svc Order vs. Electronic-Disc Add'l |
|---|---|---|---|---|---|---|---|---|---|---|---|---|---|---|---|---|
| | | | | | | Rec | Nonrecurring | | Nonrecurring Disconnect | | OSS Rates($) | | | | | |
| | | | | | | | First | Add'l | First | Add'l | SOMEC | SOMAN | SOMAN | SOMAN | SOMAN | SOMAN |
| | Each Additional DS1 Interoffice Channel per mile in same 3/1 Channel System per month | | | UNC1X | 1L5XX | 0.1813 | | | | | | | | | | |
| | Each Additional DS1 Interoffice Channel Facility Termination in same 3/1 Channel System per month | | | UNC1X | U1TF1 | 51.72 | 89.79 | 82.28 | 16.86 | 14.90 | | | | | | |
| | Each Additional DS1 COCI in the same 3/1 channel system combination per month | | | UNC1X | UC1D1 | 2.62 | 6.62 | 4.74 | 0.00 | 0.00 | | | | | | |
| | Wholesale to UNE, Switch-As-Is Charge | | | UNC1X | UNCCC | | 5.63 | 5.63 | 7.20 | 7.20 | | | | | | |
| | **EXTENDED 4-WIRE DS1 LOOP WITH DEDICATED DS1 INTEROFFICE TRANSPORT w/ 3/1 MUX** | | | | | | | | | | | | | | | |
| | First 4-wire DS1 Digital Lcoal Loop in Combination - Zone 1 | | 1 | UNC1X | USLXX | 79.08 | 253.93 | 158.45 | 46.10 | 12.07 | | | | | | |
| | First 4-wire DS1 Digital Lcoal Loop in Combination - Zone 2 | | 2 | UNC1X | USLXX | 129.38 | 253.93 | 158.45 | 46.10 | 12.07 | | | | | | |
| | First 4-wire DS1 Digital Lcoal Loop in Combination - Zone 3 | | 3 | UNC1X | USLXX | 206.74 | 253.93 | 158.45 | 46.10 | 12.07 | | | | | | |
| | First 4-wire DS1 Digital Lcoal Loop in Combination - Zone 4 | | 4 | UNC1X | USLXX | 458.46 | 253.93 | 158.45 | 46.10 | 12.07 | | | | | | |
| | First Interoffice Transport - Dedicated - DS1 combination - Per Mile Per Month | | | UNC1X | 1L5XX | 0.1813 | | | | | | | | | | |
| | First Interoffice Transport - Dedicated - DS1 combination - Facility Termination Per Month | | | UNC1X | U1TF1 | 51.72 | 89.79 | 82.28 | 16.86 | 14.90 | | | | | | |
| | 3/1 Channel System in combination per month | | | UNC3X | MQ3 | 170.63 | 179.17 | 94.52 | 34.30 | 32.82 | | | | | | |
| | Per each DS1 COCI combination per month | | | UNC1X | UC1D1 | 2.62 | 6.62 | 4.74 | 0.00 | 0.00 | | | | | | |
| | Each Additional DS1 Interoffice Channel per mile in same 3/1 Channel System per month | | | UNC1X | 1L5XX | 0.1813 | | | | | | | | | | |
| | Each Additional DS1 Interoffice Channel Facility Termination in same 3/1 Channel System per month | | | UNC1X | U1TF1 | 51.72 | 89.79 | 82.28 | 16.86 | 14.90 | | | | | | |
| | Each Additional DS1 COCI in the same 3/1 channel system combination per month | | | UNC1X | UC1D1 | 2.62 | 6.62 | 4.74 | 0.00 | 0.00 | | | | | | |
| | Additional 4-Wire DS1 Digital Local Loop in Combination - Zone 1 | | 1 | UNC1X | USLXX | 79.08 | 253.93 | 158.45 | 46.10 | 12.07 | | | | | | |
| | Additional 4-Wire DS1 Digital Local Loop in Combination - Zone 2 | | 2 | UNC1X | USLXX | 129.38 | 253.93 | 158.45 | 46.10 | 12.07 | | | | | | |
| | Additional 4-Wire DS1 Digital Local Loop in Combination - Zone 3 | | 3 | UNC1X | USLXX | 206.74 | 253.93 | 158.45 | 46.10 | 12.07 | | | | | | |
| | Additional 4-Wire DS1 Digital Local Loop in Combination - Zone 4 | | 4 | UNC1X | USLXX | 458.46 | 253.93 | 158.45 | 46.10 | 12.07 | | | | | | |
| | Wholesale to UNE, Switch-As-Is Charge | | | UNC1X | UNCCC | | 5.63 | 5.63 | 7.20 | 7.20 | | | | | | |
| | **EXTENDED 4-WIRE 56 KBPS DIGITAL EXTENDED LOOP WITH DS0 INTEROFFICE TRANSPORT** | | | | | | | | | | | | | | | |
| | First 4-wire 56 kbps Local Loop in combination - Zone 1 | | 1 | UNCDX | UDL56 | 28.65 | 126.53 | 88.85 | 60.68 | 14.64 | | | | | | |
| | First 4-wire 56 kbps Local Loop in combination - Zone 2 | | 2 | UNCDX | UDL56 | 35.76 | 126.53 | 88.85 | 60.68 | 14.64 | | | | | | |
| | First 4-wire 56 kbps Local Loop in combination - Zone 3 | | 3 | UNCDX | UDL56 | 41.99 | 126.53 | 88.85 | 60.68 | 14.64 | | | | | | |
| | First 4-wire 56 kbps Local Loop in combination - Zone 4 | | 4 | UNCDX | UDL56 | 33.48 | 126.53 | 88.85 | 60.68 | 14.64 | | | | | | |
| | First 4-wiree 56 kbps Interoffice Transport - Dedicated - Per Mile per month | | | UNCDX | 1L5XX | 0.0088 | | | | | | | | | | |
| | First 4-wire 56 kbps Interoffice Transport - Dedicated - Facility Termination per month | | | UNCDX | U1TD5 | 22.52 | 40.78 | 27.57 | 17.26 | 7.11 | | | | | | |
| | Wholesale to UNE, Switch-As-Is Charge | | | UNCDX | UNCCC | | 5.63 | 5.63 | 7.20 | 7.20 | | | | | | |
| | **EXTENDED 4-WIRE 64 KBPS DIGITAL EXTENDED LOOP WITH DS0 INTEROFFICE TRANSPORT** | | | | | | | | | | | | | | | |
| | First 4-wire 64 kbps Local Loop in combination - Zone 1 | | 1 | UNCDX | UDL64 | 28.65 | 126.53 | 88.85 | 60.68 | 14.64 | | | | | | |
| | First 4-wire 64 kbps Local Loop in combination - Zone 2 | | 2 | UNCDX | UDL64 | 35.76 | 126.53 | 88.85 | 60.68 | 14.64 | | | | | | |
| | First 4-wire 64 kbps Local Loop in combination - Zone 3 | | 3 | UNCDX | UDL64 | 41.99 | 126.53 | 88.85 | 60.68 | 14.64 | | | | | | |
| | First 4-wire 64 kbps Local Loop in combination - Zone 4 | | 4 | UNCDX | UDL64 | 33.48 | 126.53 | 88.85 | 60.68 | 14.64 | | | | | | |
| | First I4-wire 65 kbps Interoffice Transport - Dedicated - Per Mile per month | | | UNCDX | 1L5XX | 0.0088 | | | | | | | | | | |
| | First 4-wire 64 kbps Interoffice Transport - Dedicated - Facility Termination per month | | | UNCDX | U1TD6 | 22.52 | 40.78 | 27.57 | 17.26 | 7.11 | | | | | | |
| | Wholesale to UNE, Switch-As-Is Charge | | | UNCDX | UNCCC | | 5.63 | 5.63 | 7.20 | 7.20 | | | | | | |
| **ADDITIONAL NETWORK ELEMENTS** | | | | | | | | | | | | | | | | |
| | **When used as a part of a currently combined facility, the non-recurrng charges do not apply, but a Switch As Is charge does apply.** | | | | | | | | | | | | | | | |
| | **When used as ordinarily combined network elements in All States, the non-recurring charges apply and the Switch As Is Charge does not.** | | | | | | | | | | | | | | | |
| | **Nonrecurring Currently Combined Network Elements "Switch As Is" Charge** | | | | | | | | | | | | | | | |
| | Wholesale to UNE, Switch-As-Is Conversion Charge, 2/4-wire VG | | | UNCVX | UNCCC | | 5.63 | 5.63 | 7.20 | 7.20 | | | | | | |

| CATEGORY | RATE ELEMENTS | Interim | Zone | BCS | USOC | RATES($) | | | | | Svc Order Submitted Elec per LSR | Svc Order Submitted Manually per LSR | Incremental Charge - Manual Svc Order vs. Electronic-1st | Incremental Charge - Manual Svc Order vs. Electronic-Add'l | Incremental Charge - Manual Svc Order vs. Electronic-Disc 1st | Incremental Charge - Manual Svc Order vs. Electronic-Disc Add'l |
|---|---|---|---|---|---|---|---|---|---|---|---|---|---|---|---|---|
| | | | | | | Rec | Nonrecurring | | Nonrecurring Disconnect | | OSS Rates($) | | | | | |
| | | | | | | | First | Add'l | First | Add'l | SOMEC | SOMAN | SOMAN | SOMAN | SOMAN | SOMAN |
| | Wholesale to UNE, Switch-As-Is Conversion Charge, 4-wire VG | | | UNCDX | UNCCC | | 5.63 | 5.63 | 7.20 | 7.20 | | | | | | |
| | Wholesale to UNE, Switch-As-Is Conversion Charge, DS1 | | | UNC1X | UNCCC | | 5.63 | 5.63 | 7.20 | 7.20 | | | | | | |
| | Wholesale to UNE, Switch-As-Is Conversion Charge, DS3 | | | UNC3X | UNCCC | | 5.63 | 5.63 | 7.20 | 7.20 | | | | | | |
| | Wholesale to UNE, Switch-As-Is Conversion Charge, STS-1 | | | UNCSX | UNCCC | | 5.63 | 5.63 | 7.20 | 7.20 | | | | | | |
| **Optional Features & Functions:** | | | | | | | | | | | | | | | | |
| | Clear Channel Capability Extended Frame Option - per DS1 | I | | U1TD1, ULDD1,UNC1X | CCOEF | | 0.00 | 0.00 | 0.00 | 0.00 | | | | | | |
| | Clear Channel Capability Super FrameOption - per DS1 | I | | U1TD1, ULDD1,UNC1X | CCOSF | | 0.00 | 0.00 | 0.00 | 0.00 | | | | | | |
| | Clear Channel Capability (SF/ESF) Option - Subsequent Activity - per DS1 | I | | ULDD1, U1TD1, UNC1X, USL | NRCCC | | 184.60 | 23.78 | 1.96 | 0.76 | | | | | | |
| | C-bit Parity Option - Subsequent Activity - per DS3 | i | | U1TD3, ULDD3, UE3, UNC3X | NRCC3 | | 218.72 | 7.66 | 0.7201 | 0.00 | | | | | | |
| **MULTIPLEXER Interfaces** | | | | | | | | | | | | | | | | |
| | DS1 to DS0 Channel System per month | | | UNC1X | MQ1 | 102.85 | 91.57 | 62.94 | 10.87 | 10.10 | | | | | | |
| | Wholesale to UNE, Switch-As-Is Conversion Charge, 1/0 Channel System | | | UNC1X | UNCCC | | 5.63 | 5.63 | 7.20 | 7.20 | | | | | | |
| | OCU-DP COCI (data) - DS1 to DS0 Channel System - per month (2.4-64kbs) used for a Local Loop | | | UDL | 1D1DD | 1.22 | 6.62 | 4.74 | | | | | | | | |
| | OCU-DP COCI (data) - DS1 to DS0 Channel System - per month (2.4-64kbs) used for connection to a channelized DS1 Local Channel in the same SWC as collocation | | | U1TUD | 1D1DD | 1.22 | 6.62 | 4.74 | | | | | | | | |
| | 2-wire ISDN COCI (BRITE) - DS1 to DS0 Channel System - per month for a Local Loop | | | UDN | UC1CA | 2.62 | 6.62 | 4.74 | | | | | | | | |
| | 2-wire ISDN COCI (BRITE) - DS1 to DS0 Channel System - per month used for connection to a channelized DS1 Local Channel in the same SWC as collocation | | | U1TUB | UC1CA | 2.62 | 6.62 | 4.74 | | | | | | | | |
| | Voice Grade COCI - DS1 to DS0 Channel System - per month used for a Local Loop | | | UEA | 1D1VG | 0.5737 | 6.62 | 4.74 | | | | | | | | |
| | Voice Grade COCI - DS1 to DS0 Channel System - per month used for connection to a channelized DS1 Local Channel in the same SWC as collocation | | | U1TUC | 1D1VG | 0.5737 | 6.62 | 4.74 | | | | | | | | |
| | DS3 to DS1 Channel System per month | | | UNC3X | MQ3 | 170.63 | 179.17 | 94.52 | 34.30 | 32.82 | | | | | | |
| | Wholesale to UNE, Switch-As-Is Conversion Charge, 3/1 Channel System | | | UNC3X | UNCCC | | 5.63 | 5.63 | 7.20 | 7.20 | | | | | | |
| | STS-1 to DS1 Channel System per month | | | UNCSX | MQ3 | 170.63 | 179.17 | 94.52 | 34.30 | 32.82 | | | | | | |
| | Wholesale to UNE, Switch-As-Is Conversion Charge, 3/1 Channel System | | | UNCSX | UNCCC | | 5.63 | 5.63 | 7.20 | 7.20 | | | | | | |
| | DS1 COCI used with Loop per month | | | USL | UC1D1 | 12.96 | 6.62 | 4.74 | | | | | | | | |
| | DS1 COCI (used for connection to a channelized DS1 Local Channel in the same SWC as collocation) per month | | | U1TUA | UC1D1 | 12.96 | 6.62 | 4.74 | | | | | | | | |
| | DS1 COCI used with Interoffice Channel per month | | | U1TD1 | UC1D1 | 12.96 | 6.62 | 4.74 | | | | | | | | |
| | DS3 Interface Unit (DS1 COCI) used with Local Channel per month | | | ULDD1 | UC1D1 | 12.96 | 6.62 | 4.74 | | | | | | | | |
| **Access to DCS - Customer Reconfiguration (FlexServ)** | | | | | | | | | | | | | | | | |
| | Customer Reconfiguration Establishment | | | | | | 1.49 | | 1.90 | | | | | | | |
| | DS1 DSC Termination with DS0 Switching | | | | | 20.81 | 25.69 | 19.77 | 17.15 | 13.79 | | | | | | |
| | DS1 DSC Termination with DS1 Switching | | | | | 10.73 | 18.57 | 12.65 | 12.60 | 9.24 | | | | | | |
| | DS3 DSC Termination with DS1 Switching | | | | | 145.05 | 25.69 | 19.77 | 17.15 | 13.79 | | | | | | |
| **Service Rearrangements** | | | | | | | | | | | | | | | | |
| | NRC - Change in Facility Assignment per circuit Service Rearrangement | I | | U1TVX, U1TDX, UEA, UDL, U1TUC, U1TUD, U1TUB, ULDVX, ULDDX, UNCVX, UNCDX | URETD | | 269.66 | 47.05 | | | | | | | | |

| UNBUNDLED NETWORK ELEMENTS - Mississippi | | | | | | | | | | | | | | Attachment: 2 Exh. A | | | |
|---|---|---|---|---|---|---|---|---|---|---|---|---|---|---|---|---|---|
| CATEGORY | | RATE ELEMENTS | Interim | Zone | BCS | USOC | RATES($) | | | | | Svc Order Submitted Elec per LSR | Svc Order Submitted Manually per LSR | Incremental Charge - Manual Svc Order vs. Electronic-1st | Incremental Charge - Manual Svc Order vs. Electronic-Add'l | Incremental Charge - Manual Svc Order vs. Electronic-Disc 1st | Incremental Charge - Manual Svc Order vs. Electronic-Disc Add'l |
| | | | | | | | Rec | Nonrecurring | | Nonrecurring Disconnect | | OSS Rates($) | | | | | |
| | | | | | | | | First | Add'l | First | Add'l | SOMEC | SOMAN | SOMAN | SOMAN | SOMAN | SOMAN |
| | | NRC - Change in Facility Assignment per circuit Project Management (added to CFA per circuit if project managed) | I | | U1TVX, U1TDX, UEA, UDL, U1TUC, U1TUD, U1TUB, ULDVX, ULDDX, UNCVX, UNCDX | URETB | | 1.28 | 1.28 | | | | | | | | |
| | Miscellaneous | | | | | | | | | | | | | | | | |
| | | NRC - Order Coordination Specific Time - Dedicated Transport | I | | UNC1X | OCOSR | | 18.87 | 18.87 | | | | | | | | |

| UNBUNDLED NETWORK ELEMENTS - North Carolina | | | | | | | | | | | | | | Attachment: 2 Exh. A | | | |
|---|---|---|---|---|---|---|---|---|---|---|---|---|---|---|---|---|---|
| CATEGORY | | RATE ELEMENTS | Interim | Zone | BCS | USOC | RATES($) | | | | | Svc Order Submitted Elec per LSR | Svc Order Submitted Manually per LSR | Incremental Charge - Manual Svc Order vs. Electronic-1st | Incremental Charge - Manual Svc Order vs. Electronic-Add'l | Incremental Charge - Manual Svc Order vs. Electronic-Disc 1st | Incremental Charge - Manual Svc Order vs. Electronic-Disc Add'l |
| | | | | | | | Rec | Nonrecurring | | Nonrecurring Disconnect | | OSS Rates($) | | | | | |
| | | | | | | | | First | Add'l | First | Add'l | SOMEC | SOMAN | SOMAN | SOMAN | SOMAN | SOMAN |
| | | | | | | | | | | | | | | | | | |
| | **The "Zone" shown in the sections for stand-alone loops or loops as part of a combination refers to Geographically Deaveraged UNE Zones. To view Geographically Deaveraged UNE Zone Designations by Central Office, refer to internet Website: http://www.interconnection.bellsouth.com/become_a_clec/html/interconnection.htm** | | | | | | | | | | | | | | | | |
| **OPERATIONS SUPPORT SYSTEMS (OSS) - "STATE SPECIFIC RATES"** | | | | | | | | | | | | | | | | | |
| | NOTE: (1) CLEC should contact its contract negotiator if it prefers the "regional" OSS charges as offered by BellSouth. The OSS charges currently contained in this rate exhibit are the PSC state ordered "state specificl" service ordering charges. CLEC may elect either the state specific Commission ordered rates for the service ordering charges, or CLEC may elect the regional service ordering charge, however, CLEC can not obtain a mixture of the two regardless if CLEC has a interconnection contract established in each of the 9 states. | | | | | | | | | | | | | | | | |
| | NOTE: (2) Any element that can be ordered electronically will be billed according to the SOMEC rate listed in this category. Please refer to BellSouth's Local Ordering Handbook (LOH) to determine if a product can be ordered electronically. For those elements that cannot be ordered electronically at present per the LOH, the listed SOMEC rate in this category reflects the charge that would be billed to a CLEC once electronic ordering capabilities come on-line for that element. Otherwise, the manual ordering charge, SOMAN, will be applied to a CLECs bill when it submits an LSR to BellSouth. | | | | | | | | | | | | | | | | |
| | | OSS - Electronic Service Order Charge, Per Local Service Request (LSR) - UNE Only | | | | SOMEC | | 2.98 | 0.00 | 2.98 | 0.00 | | | | | | |
| | | OSS - Manual Service Order Charge, Per Local Service Request (LSR) - UNE Only | | | | SOMAN | | 15.20 | 0.00 | 15.20 | 0.00 | | | | | | |
| **UNE SERVICE DATE ADVANCEMENT CHARGE** | | | | | | | | | | | | | | | | | |
| | **NOTE: The Expedite charge will be maintained commensurate with BellSouth's FCC No.1 Tariff, Section 5 as applicable.** | | | | | | | | | | | | | | | | |
| | | UNE Expedite Charge per Circuit or Line Assignable USOC, per Day | | | UAL, UEANL, UCL, UEF, UDF, UEQ, UDL, UENTW, UDN, UEA, UHL, ULC, USL, U1T12, U1T48, U1TD1, U1TD3, U1TDX, U1TO3, U1TS1, U1TVX, UC1BC, UC1BL, UC1CC, UC1CL, UC1DC, UC1DL, UC1EC, UC1EL, UC1FC, UC1FL, UC1GC, UC1GL, UC1HC, UC1HL, UDL12, UDL48, UDLO3, UDLSX, UE3, ULD12, ULD48, ULDD1, ULDD3, ULDDX, ULDO3, ULDS1, ULDVX, UNC1X, UNC3X, UNCDX, UNCNX, UNCSX, UNCVX, UNLD1, UNLD3, UXTD1, UXTD3, UXTS1, U1TUC, U1TUD, U1TUB, U1TUA,NTCVG, NTCUD, NTCD1 | SDASP | | 200.00 | 200.00 | | | | | | | | |
| **ORDER MODIFICATION CHARGE** | | | | | | | | | | | | | | | | | |
| | | Order Modification Charge (OMC) | | | | | | 26.21 | 0.00 | 0.00 | 0.00 | | | | | | |
| | | Order Modification Additional Dispatch Charge (OMCAD) | | | | | | 0.00 | 0.00 | 0.00 | 0.00 | | | | | | |
| **UNBUNDLED EXCHANGE ACCESS LOOP** | | | | | | | | | | | | | | | | | |
| | **2-WIRE ANALOG VOICE GRADE LOOP** | | | | | | | | | | | | | | | | |
| | | 2-Wire Analog Voice Grade Loop - Service Level 1- Zone 1 | | 1 | UEANL | UEAL2 | 10.82 | 36.54 | 16.87 | | | | | | | | |
| | | 2-Wire Analog Voice Grade Loop - Service Level 1- Zone 2 | | 2 | UEANL | UEAL2 | 16.21 | 36.54 | 16.87 | | | | | | | | |
| | | 2-Wire Analog Voice Grade Loop - Service Level 1- Zone 3 | | 3 | UEANL | UEAL2 | 24.08 | 36.54 | 16.87 | | | | | | | | |
| | | 2-Wire Analog Voice Grade Loop - Service Level 1- Zone 1 | | 1 | UEANL | UEASL | 10.82 | 36.54 | 16.87 | | | | | | | | |
| | | 2-Wire Analog Voice Grade Loop - Service Level 1- Zone 2 | | 2 | UEANL | UEASL | 16.21 | 36.54 | 16.87 | | | | | | | | |
| | | 2-Wire Analog Voice Grade Loop - Service Level 1- Zone 3 | | 3 | UEANL | UEASL | 24.08 | 36.54 | 16.87 | | | | | | | | |
| | | Unbundled Miscellaneous Rate Element, Tag Loop at End User Premise | | | UEANL | URETL | | 8.93 | 0.88 | | | | | | | | |

| UNBUNDLED NETWORK ELEMENTS - North Carolina | | | | | | | | | | | | | | Attachment: 2 Exh. A | | | |
|---|---|---|---|---|---|---|---|---|---|---|---|---|---|---|---|---|---|
| CATEGORY | | RATE ELEMENTS | Interim | Zone | BCS | USOC | RATES($) | | | | | Svc Order Submitted Elec per LSR | Svc Order Submitted Manually per LSR | Incremental Charge - Manual Svc Order vs. Electronic-1st | Incremental Charge - Manual Svc Order vs. Electronic-Add'l | Incremental Charge - Manual Svc Order vs. Electronic-Disc 1st | Incremental Charge - Manual Svc Order vs. Electronic-Disc Add'l |
| | | | | | | | Rec | Nonrecurring | | Nonrecurring Disconnect | | OSS Rates($) | | | | | |
| | | | | | | | | First | Add'l | First | Add'l | SOMEC | SOMAN | SOMAN | SOMAN | SOMAN | SOMAN |
| | | Loop Testing - Basic 1st Half Hour | | | UEANL | URET1 | | 33.17 | 0.00 | | | | | | | | |
| | | Loop Testing - Basic Additional Half Hour | | | UEANL | URETA | | 19.28 | 19.28 | | | | | | | | |
| | | CLEC to CLEC Conversion Charge Without Outside Dispatch (UVL-SL1) | | | UEANL | UREWO | | 15.74 | 8.92 | | | | | | | | |
| | | Unbundled Voice Loop, Non-Design Voice Loop, billing for BST providing make-up (Engineering Information - E.I.) | | | UEANL | UEANM | | 13.04 | 13.04 | | | | | | | | |
| | | Manual Order Coordination for UVL-SL1s (per loop) | | | UEANL | UEAMC | | 7.92 | 7.92 | | | | | | | | |
| | **2-WIRE Unbundled COPPER LOOP** | | | | | | | | | | | | | | | | |
| | | 2-Wire Unbundled Copper Loop - Non-Designed Zone 1 | | 1 | UEQ | UEQ2X | 10.93 | 35.27 | 15.60 | | | | | | | | |
| | | 2 Wire Unbundled Copper Loop - Non-Designed - Zone 2 | | 2 | UEQ | UEQ2X | 12.75 | 35.27 | 15.60 | | | | | | | | |
| | | 2 Wire Unbundled Copper Loop - Non-Designed - Zone 3 | | 3 | UEQ | UEQ2X | 13.92 | 35.27 | 15.60 | | | | | | | | |
| | | Unbundled Miscellaneous Rate Element, Tag Loop at End User Premise | | | UEQ | URETL | | 8.93 | 0.88 | | | | | | | | |
| | | Manual Order Coordination 2 Wire Unbundled Copper Loop - Non-Designed (per loop) | | | UEQ | USBMC | | 7.92 | 7.92 | | | | | | | | |
| | | Unbundled Copper Loop, Non-Design Copper Loop, billing for BST providing make-up (Engineering Information - E.I.) | | | UEQ | UEQMU | | 13.04 | 13.04 | | | | | | | | |
| | | Loop Testing - Basic 1st Half Hour | | | UEQ | URET1 | | 33.17 | 0.00 | | | | | | | | |
| | | Loop Testing - Basic Additional Half Hour | | | UEQ | URETA | | 19.28 | 19.28 | | | | | | | | |
| | | CLEC to CLEC Conversion Charge Without Outside Dispatch (UCL-ND) | | | UEQ | UREWO | | 14.23 | 7.41 | | | | | | | | |
| **UNBUNDLED EXCHANGE ACCESS LOOP** | | | | | | | | | | | | | | | | | |
| | **2-WIRE ANALOG VOICE GRADE LOOP** | | | | | | | | | | | | | | | | |
| | | 2-Wire Analog Voice Grade Loop - Service Level 2 w/Loop or Ground Start Signaling - Zone 1 | | 1 | UEA, NTCVG | UEAL2 | 11.96 | 102.10 | 65.72 | | | | | | | | |
| | | 2-Wire Analog Voice Grade Loop - Service Level 2 w/Loop or Ground Start Signaling - Zone 2 | | 2 | UEA, NTCVG | UEAL2 | 17.36 | 102.10 | 65.72 | | | | | | | | |
| | | 2-Wire Analog Voice Grade Loop - Service Level 2 w/Loop or Ground Start Signaling - Zone 3 | | 3 | UEA, NTCVG | UEAL2 | 25.23 | 102.10 | 65.72 | | | | | | | | |
| | | 2-Wire Analog Voice Grade Loop - Service Level 2 w/Reverse Battery Signaling - Zone 1 | | 1 | UEA, NTCVG | UEAR2 | 11.96 | 102.10 | 65.72 | | | | | | | | |
| | | 2-Wire Analog Voice Grade Loop - Service Level 2 w/Reverse Battery Signaling - Zone 2 | | 2 | UEA, NTCVG | UEAR2 | 17.36 | 102.10 | 65.72 | | | | | | | | |
| | | 2-Wire Analog Voice Grade Loop - Service Level 2 w/Reverse Battery Signaling - Zone 3 | | 3 | UEA, NTCVG | UEAR2 | 25.23 | 102.10 | 65.72 | | | | | | | | |
| | | Switch-As-Is Conversion rate per UNE Loop, Single LSR, (per DS0) | | | UEA, NTCVG | URESL | | 22.05 | 3.17 | | | | | | | | |
| | | Switch-As-Is Conversion rate per UNE Loop, Spreadsheet, (per DS0) | | | UEA, NTCVG | URESP | | 23.47 | 4.59 | | | | | | | | |
| | | CLEC to CLEC Conversion Charge without outside dispatch | | | UEA, NTCVG | UREWO | | 87.49 | 36.26 | | | | | | | | |
| | | Loop Tagging - Service Level 2 (SL2) | | | UEA, NTCVG | URETL | | 11.20 | 1.10 | | | | | | | | |
| | **4-WIRE ANALOG VOICE GRADE LOOP** | | | | | | | | | | | | | | | | |
| | | 4-Wire Analog Voice Grade Loop - Zone 1 | | 1 | UEA, NTCVG | UEAL4 | 19.52 | 127.40 | 91.02 | | | | | | | | |
| | | 4-Wire Analog Voice Grade Loop - Zone 2 | | 2 | UEA, NTCVG | UEAL4 | 24.74 | 127.40 | 91.02 | | | | | | | | |
| | | 4-Wire Analog Voice Grade Loop - Zone 3 | | 3 | UEA, NTCVG | UEAL4 | 46.11 | 127.40 | 91.02 | | | | | | | | |
| | | Switch-As-Is Conversion rate per UNE Loop, Single LSR, (per DS0) | | | UEA, NTCVG | URESL | | 22.05 | 3.17 | | | | | | | | |
| | | Switch-As-Is Conversion rate per UNE Loop, Spreadsheet, (per DS0) | | | UEA, NTCVG | URESP | | 23.47 | 4.59 | | | | | | | | |
| | | CLEC to CLEC Conversion Charge without outside dispatch | | | UEA, NTCVG | UREWO | | 87.49 | 36.26 | | | | | | | | |
| | **2-WIRE ISDN DIGITAL GRADE LOOP** | | | | | | | | | | | | | | | | |
| | | 2-Wire ISDN Digital Grade Loop - Zone 1 | | 1 | UDN | U1L2X | 19.78 | 113.34 | 76.96 | | | | | | | | |
| | | 2-Wire ISDN Digital Grade Loop - Zone 2 | | 2 | UDN | U1L2X | 26.16 | 113.34 | 76.96 | | | | | | | | |
| | | 2-Wire ISDN Digital Grade Loop - Zone 3 | | 3 | UDN | U1L2X | 35.37 | 113.34 | 76.96 | | | | | | | | |
| | | CLEC to CLEC Conversion Charge without outside dispatch | | | UDN | UREWO | | 91.39 | 44.04 | | | | | | | | |
| | **2-WIRE ASYMMETRICAL DIGITAL SUBSCRIBER LINE (ADSL) COMPATIBLE LOOP** | | | | | | | | | | | | | | | | |
| | | 2 Wire Unbundled ADSL Loop including manual service inquiry & facility reservation - Zone 1 | | 1 | UAL | UAL2X | 10.14 | 117.08 | 68.36 | | | | | | | | |

| CATEGORY | RATE ELEMENTS | Interim | Zone | BCS | USOC | RATES($) | | | | | Svc Order Submitted Elec per LSR | Svc Order Submitted Manually per LSR | Incremental Charge - Manual Svc Order vs. Electronic-1st | Incremental Charge - Manual Svc Order vs. Electronic-Add'l | Incremental Charge - Manual Svc Order vs. Electronic-Disc 1st | Incremental Charge - Manual Svc Order vs. Electronic-Disc Add'l |
|---|---|---|---|---|---|---|---|---|---|---|---|---|---|---|---|---|
| | | | | | | Rec | Nonrecurring | | Nonrecurring Disconnect | | OSS Rates($) | | | | | |
| | | | | | | | First | Add'l | First | Add'l | SOMEC | SOMAN | SOMAN | SOMAN | SOMAN | SOMAN |
| | 2 Wire Unbundled ADSL Loop including manual service inquiry & facility reservation - Zone 2 | | 2 | UAL | UAL2X | 11.59 | 117.08 | 68.36 | | | | | | | | |
| | 2 Wire Unbundled ADSL Loop including manual service inquiry & facility reservation - Zone 3 | | 3 | UAL | UAL2X | 12.28 | 117.08 | 68.36 | | | | | | | | |
| | 2 Wire Unbundled ADSL Loop without manual service inquiry & facility reservaton - Zone 1 | | 1 | UAL | UAL2W | 10.14 | 92.83 | 56.02 | | | | | | | | |
| | 2 Wire Unbundled ADSL Loop without manual service inquiry & facility reservaton - Zone 2 | | 2 | UAL | UAL2W | 11.59 | 92.83 | 56.02 | | | | | | | | |
| | 2 Wire Unbundled ADSL Loop without manual service inquiry & facility reservaton - Zone 3 | | 3 | UAL | UAL2W | 12.28 | 92.83 | 56.02 | | | | | | | | |
| | CLEC to CLEC Conversion Charge without outside dispatch | | | UAL | UREWO | | 78.06 | 32.38 | | | | | | | | |
| | **2-WIRE HIGH BIT RATE DIGITAL SUBSCRIBER LINE (HDSL) COMPATIBLE LOOP** | | | | | | | | | | | | | | | |
| | 2 Wire Unbundled HDSL Loop including manual service inquiry & facility reservation - Zone 1 | | 1 | UHL | UHL2X | 7.95 | 125.50 | 76.77 | | | | | | | | |
| | 2 Wire Unbundled HDSL Loop including manual service inquiry & facility reservation - Zone 2 | | 2 | UHL | UHL2X | 9.15 | 125.50 | 76.77 | | | | | | | | |
| | 2 Wire Unbundled HDSL Loop including manual service inquiry & facility reservation - Zone 3 | | 3 | UHL | UHL2X | 9.53 | 125.50 | 76.77 | | | | | | | | |
| | 2 Wire Unbundled HDSL Loop without manual service inquiry and facility reservation - Zone 1 | | 1 | UHL | UHL2W | 7.95 | 101.24 | 64.43 | | | | | | | | |
| | 2 Wire Unbundled HDSL Loop without manual service inquiry and facility reservation - Zone 2 | | 2 | UHL | UHL2W | 9.15 | 101.24 | 64.43 | | | | | | | | |
| | 2 Wire Unbundled HDSL Loop without manual service inquiry and facility reservation - Zone 3 | | 3 | UHL | UHL2W | 9.53 | 101.24 | 64.43 | | | | | | | | |
| | CLEC to CLEC Conversion Charge without outside dispatch | | | UHL | UREWO | | 78.00 | 32.38 | | | | | | | | |
| | **4-WIRE HIGH BIT RATE DIGITAL SUBSCRIBER LINE (HDSL) COMPATIBLE LOOP** | | | | | | | | | | | | | | | |
| | 4 Wire Unbundled HDSL Loop including manual service inquiry and facility reservation - Zone 1 | | 1 | UHL | UHL4X | 11.01 | 153.26 | 104.54 | | | | | | | | |
| | 4-Wire Unbundled HDSL Loop including manual service inquiry and facility reservation - Zone 2 | | 2 | UHL | UHL4X | 12.20 | 153.26 | 104.54 | | | | | | | | |
| | 4-Wire Unbundled HDSL Loop including manual service inquiry and facility reservation - Zone 3 | | 3 | UHL | UHL4X | 13.49 | 153.26 | 104.54 | | | | | | | | |
| | 4-Wire Unbundled HDSL Loop without manual service inquiry and facility reservation - Zone 1 | | 1 | UHL | UHL4W | 11.01 | 129.00 | 92.20 | | | | | | | | |
| | 4-Wire Unbundled HDSL Loop without manual service inquiry and facility reservation - Zone 2 | | 2 | UHL | UHL4W | 12.20 | 129.00 | 92.20 | | | | | | | | |
| | 4-Wire Unbundled HDSL Loop without manual service inquiry and facility reservation - Zone 3 | | 3 | UHL | UHL4W | 13.49 | 129.00 | 92.20 | | | | | | | | |
| | CLEC to CLEC Conversion Charge without outside dispatch | | | UHL | UREWO | | 78.00 | 32.38 | | | | | | | | |
| | **4-WIRE DS1 DIGITAL LOOP** | | | | | | | | | | | | | | | |
| | 4-Wire DS1 Digital Loop - Zone 1 | | 1 | USL, NTCD1 | USLXX | 63.62 | 245.16 | 152.98 | | | | | | | | |
| | 4-Wire DS1 Digital Loop - Zone 2 | | 2 | USL, NTCD1 | USLXX | 104.40 | 245.16 | 152.98 | | | | | | | | |
| | 4-Wire DS1 Digital Loop - Zone 3 | | 3 | USL, NTCD1 | USLXX | 210.22 | 245.16 | 152.98 | | | | | | | | |
| | Switch-As-Is Conversion rate per UNE Loop, Single LSR, (per DS1) | | | USL, NTCD1 | URESL | | 22.05 | 3.17 | | | | | | | | |
| | Switch-As-Is Conversion rate per UNE Loop, Spreadsheet, (per DS1) | | | USL, NTCD1 | URESP | | 23.47 | 4.59 | | | | | | | | |
| | CLEC to CLEC Conversion Charge without outside dispatch | | | USL | UREWO | | 100.99 | 43.00 | | | | | | | | |
| | **4-WIRE 19.2, 56 OR 64 KBPS DIGITAL GRADE LOOP** | | | | | | | | | | | | | | | |
| | 4 Wire Unbundled Digital 19.2 Kbps | | 1 | UDL, NTCUD | UDL19 | 21.98 | 121.86 | 85.48 | | | | | | | | |
| | 4 Wire Unbundled Digital 19.2 Kbps | | 2 | UDL, NTCUD | UDL19 | 27.58 | 121.86 | 85.48 | | | | | | | | |
| | 4 Wire Unbundled Digital 19.2 Kbps | | 3 | UDL, NTCUD | UDL19 | 43.08 | 121.86 | 85.48 | | | | | | | | |
| | 4 Wire Unbundled Digital Loop 56 Kbps - Zone 1 | | 1 | UDL, NTCUD | UDL56 | 21.98 | 121.86 | 85.48 | | | | | | | | |
| | 4 Wire Unbundled Digital Loop 56 Kbps - Zone 2 | | 2 | UDL, NTCUD | UDL56 | 27.58 | 121.86 | 85.48 | | | | | | | | |
| | 4 Wire Unbundled Digital Loop 56 Kbps - Zone 3 | | 3 | UDL, NTCUD | UDL56 | 43.08 | 121.86 | 85.48 | | | | | | | | |
| | 4 Wire Unbundled Digital Loop 64 Kbps - Zone 1 | | 1 | UDL, NTCUD | UDL64 | 21.98 | 121.86 | 85.48 | | | | | | | | |
| | 4 Wire Unbundled Digital Loop 64 Kbps - Zone 2 | | 2 | UDL, NTCUD | UDL64 | 27.58 | 121.86 | 85.48 | | | | | | | | |
| | 4 Wire Unbundled Digital Loop 64 Kbps - Zone 3 | | 3 | UDL, NTCUD | UDL64 | 43.08 | 121.86 | 85.48 | | | | | | | | |

| UNBUNDLED NETWORK ELEMENTS - North Carolina | | | | | | | | | | | | | | Attachment: 2 Exh. A | | | |
|---|---|---|---|---|---|---|---|---|---|---|---|---|---|---|---|---|---|
| CATEGORY | | RATE ELEMENTS | Interim | Zone | BCS | USOC | RATES($) | | | | | Svc Order Submitted Elec per LSR | Svc Order Submitted Manually per LSR | Incremental Charge - Manual Svc Order vs. Electronic-1st | Incremental Charge - Manual Svc Order vs. Electronic-Add'l | Incremental Charge - Manual Svc Order vs. Electronic-Disc 1st | Incremental Charge - Manual Svc Order vs. Electronic-Disc Add'l |
| | | | | | | | Rec | Nonrecurring | | Nonrecurring Disconnect | | OSS Rates($) | | | | | |
| | | | | | | | | First | Add'l | First | Add'l | SOMEC | SOMAN | SOMAN | SOMAN | SOMAN | SOMAN |
| | | Switch-As-Is Conversion rate per UNE Loop, Single LSR, (per DS0) | | | UDL, NTCUD | URESL | | 22.05 | 3.17 | | | | | | | | |
| | | Switch-As-Is Conversion rate per UNE Loop, Spreadsheet, (per DS0) | | | UDL, NTCUD | URESP | | 23.47 | 4.59 | | | | | | | | |
| | | CLEC to CLEC Conversion Charge without outside dispatch | | | UDL, NTCUD | UREWO | | 101.86 | 49.62 | | | | | | | | |
| | **2-WIRE Unbundled COPPER LOOP** | | | | | | | | | | | | | | | | |
| | | 2-Wire Unbundled Copper Loop-Designed including manual service inquiry & facility reservation - Zone 1 | | 1 | UCL | UCLPB | 10.14 | 116.18 | 67.46 | | | | | | | | |
| | | 2-Wire Unbundled Copper Loop-Designed including manual service inquiry & facility reservation - Zone 2 | | 2 | UCL | UCLPB | 11.59 | 116.18 | 67.46 | | | | | | | | |
| | | 2 Wire Unbundled Copper Loop-Designed including manual service inquiry & facility reservation - Zone 3 | | 3 | UCL | UCLPB | 12.28 | 116.18 | 67.46 | | | | | | | | |
| | | 2-Wire Unbundled Copper Loop-Designed without manual service inquiry and facility reservation - Zone 1 | | 1 | UCL | UCLPW | 10.14 | 91.92 | 55.12 | | | | | | | | |
| | | 2-Wire Unbundled Copper Loop-Designed without manual service inquiry and facility reservation - Zone 2 | | 2 | UCL | UCLPW | 11.59 | 91.92 | 55.12 | | | | | | | | |
| | | 2-Wire Unbundled Copper Loop-Designed without manual service inquiry and facility reservation - Zone 3 | | 3 | UCL | UCLPW | 12.28 | 91.92 | 55.12 | | | | | | | | |
| | | CLEC to CLEC Conversion Charge without outside dispatch (UCL-Des) | | | UCL | UREWO | | 89.06 | 34.45 | | | | | | | | |
| | **4-WIRE COPPER LOOP** | | | | | | | | | | | | | | | | |
| | | 4-Wire Copper Loop including manual service inquiry and facility reservation - Zone 1 | | 1 | UCL | UCL4S | 13.10 | 139.69 | 90.96 | | | | | | | | |
| | | 4-Wire Copper Loop including manual service inquiry and facility reservation - Zone 2 | | 2 | UCL | UCL4S | 15.17 | 139.69 | 90.96 | | | | | | | | |
| | | 4-Wire Copper Loop including manual service inquiry and facility reservation - Zone 3 | | 3 | UCL | UCL4S | 17.03 | 139.69 | 90.96 | | | | | | | | |
| | | 4-Wire Copper Loop without manual service inquiry and facility reservation - Zone 1 | | 1 | UCL | UCL4W | 13.10 | 115.43 | 78.63 | | | | | | | | |
| | | 4-Wire Copper Loop without manual service inquiry and facility reservation - Zone 2 | | 2 | UCL | UCL4W | 15.17 | 115.43 | 78.63 | | | | | | | | |
| | | 4-Wire Copper Loop without manual service inquiry and facility reservation - Zone 3 | | 3 | UCL | UCL4W | 17.03 | 115.43 | 78.63 | | | | | | | | |
| | | CLEC to CLEC Conversion Charge without outside dispatch (UCL-Des) | | | UCL | UREWO | | 89.06 | 34.45 | | | | | | | | |
| | | Order Coordination for Unbundled Copper Loops (per loop) | | | UCL | UCLMC | | 7.92 | 7.92 | | | | | | | | |
| | | Order Coordination for Specified Conversion Time (per LSR) | | | UEA, UDN, UAL, UHL, UDL, NTCVG, NTCUD, USL, NTCD1, UEANL | OCOSL | | 17.56 | | | | | | | | | |
| **LOOP MODIFICATION** | | | | | | | | | | | | | | | | | |
| | | Unbundled Loop Modification, Removal of Load Coils - 2 Wire pair less than or equal to 18k ft, per Unbundled Loop | | | UAL, UHL, UCL, UEQ, ULS, UEA, UEANL, UEPSR, UEPSB | ULM2L | | 0.00 | 0.00 | | | | | | | | |
| | | Unbundled Loop Modification, Removal of Load Coils - 2 wire greater than 18k ft | | | UCL, ULS, UEQ | ULM2G | | 0.00 | 0.00 | | | | | | | | |
| | | Unbundled Loop Modification Removal of Load Coils - 4 Wire less than or equal to 18K ft, per Unbundled Loop | | | UHL, UCL, UEA | ULM4L | | 0.00 | 0.00 | | | | | | | | |
| | | Unbundled Loop Modification Removal of Load Coils - 4 Wire pair greater than 18k ft | | | UCL | ULM4G | | 0.00 | 0.00 | | | | | | | | |
| | | Unbundled Loop Modification Removal of Bridged Tap Removal, per unbundled loop | | | UAL, UHL, UCL, UEQ, ULS, UEA, UEANL, UEPSR, UEPSB | ULMBT | | 12.15 | 12.15 | | | | | | | | |
| **SUB-LOOPS** | | | | | | | | | | | | | | | | | |
| | **Sub-Loop Distribution** | | | | | | | | | | | | | | | | |
| | | Sub-Loop - Per Cross Box Location - CLEC Feeder Facility Set-Up | | | UEANL, UEF | USBSA | | 144.09 | | | | | | | | | |

| UNBUNDLED NETWORK ELEMENTS - North Carolina | | | | | | | | | | | | | Attachment: 2 Exh. A | | | |
|---|---|---|---|---|---|---|---|---|---|---|---|---|---|---|---|---|
| CATEGORY | RATE ELEMENTS | Interim | Zone | BCS | USOC | RATES($) | | | | | Svc Order Submitted Elec per LSR | Svc Order Submitted Manually per LSR | Incremental Charge - Manual Svc Order vs. Electronic-1st | Incremental Charge - Manual Svc Order vs. Electronic-Add'l | Incremental Charge - Manual Svc Order vs. Electronic-Disc 1st | Incremental Charge - Manual Svc Order vs. Electronic-Disc Add'l |
| | | | | | | Rec | Nonrecurring | | Nonrecurring Disconnect | | OSS Rates($) | | | | | |
| | | | | | | | First | Add'l | First | Add'l | SOMEC | SOMAN | SOMAN | SOMAN | SOMAN | SOMAN |
| | Sub-Loop - Per Cross Box Location - Per 25 Pair Panel Set-Up | | | UEANL, UEF | USBSB | | 10.99 | 10.99 | | | | | | | | |
| | Sub-Loop - Per Building Equipment Room - CLEC Feeder Facility Set-Up | | | UEANL | USBSC | | 86.16 | | | | | | | | | |
| | Sub-Loop - Per Building Equipment Room - Per 25 Pair Panel Set-Up | | | UEANL | USBSD | | 27.13 | 27.13 | | | | | | | | |
| | Sub-Loop Distribution Per 2-Wire Analog Voice Grade Loop - Zone 1 | | 1 | UEANL | USBN2 | 6.70 | 63.89 | 30.06 | | | | | | | | |
| | Sub-Loop Distribution Per 2-Wire Analog Voice Grade Loop - Zone 2 | | 2 | UEANL | USBN2 | 9.93 | 63.89 | 30.06 | | | | | | | | |
| | Sub-Loop Distribution Per 2-Wire Analog Voice Grade Loop - Zone 3 | | 3 | UEANL | USBN2 | 12.79 | 63.89 | 30.06 | | | | | | | | |
| | Order Coordination for Unbundled Sub-Loops, per sub-loop pair | | | UEANL | USBMC | | 7.92 | 7.92 | | | | | | | | |
| | Sub-Loop Distribution Per 4-Wire Analog Voice Grade Loop - Zone 1 | | 1 | UEANL | USBN4 | 10.81 | 76.75 | 42.92 | | | | | | | | |
| | Sub-Loop Distribution Per 4-Wire Analog Voice Grade Loop - Zone 2 | | 2 | UEANL | USBN4 | 14.16 | 76.75 | 42.92 | | | | | | | | |
| | Sub-Loop Distribution Per 4-Wire Analog Voice Grade Loop - Zone 3 | | 3 | UEANL | USBN4 | 24.67 | 76.75 | 42.92 | | | | | | | | |
| | Order Coordination for Unbundled Sub-Loops, per sub-loop pair | | | UEANL | USBMC | | 7.92 | 7.92 | | | | | | | | |
| | Sub-Loop 2-Wire Intrabuilding Network Cable (INC) | | | UEANL | USBR2 | 2.34 | 51.48 | 17.65 | | | | | | | | |
| | Order Coordination for Unbundled Sub-Loops, per sub-loop pair | | | UEANL | USBMC | | 7.92 | 7.92 | | | | | | | | |
| | Sub-Loop 4-Wire Intrabuilding Network Cable (INC) | | | UEANL | USBR4 | 4.18 | 57.54 | 23.71 | | | | | | | | |
| | Order Coordination for Unbundled Sub-Loops, per sub-loop pair | | | UEANL | USBMC | | 7.92 | 7.92 | | | | | | | | |
| | Loop Testing - Basic 1st Half Hour | | | UEANL | URET1 | | 33.17 | 0.00 | | | | | | | | |
| | Loop Testing - Basic Additional Half Hour | | | UEANL | URETA | | 19.28 | 19.28 | | | | | | | | |
| | 2 Wire Copper Unbundled Sub-Loop Distribution - Zone 1 | | 1 | UEF | UCS2X | 5.43 | 63.89 | 30.06 | | | | | | | | |
| | 2 Wire Copper Unbundled Sub-Loop Distribution - Zone 2 | | 2 | UEF | UCS2X | 8.04 | 63.89 | 30.06 | | | | | | | | |
| | 2 Wire Copper Unbundled Sub-Loop Distribution - Zone 3 | | 3 | UEF | UCS2X | 9.79 | 63.89 | 30.06 | | | | | | | | |
| | Order Coordination for Unbundled Sub-Loops, per sub-loop pair | | | UEF | USBMC | | 7.92 | 7.92 | | | | | | | | |
| | 4 Wire Copper Unbundled Sub-Loop Distribution - Zone 1 | | 1 | UEF | UCS4X | 6.34 | 76.75 | 42.92 | | | | | | | | |
| | 4 Wire Copper Unbundled Sub-Loop Distribution - Zone 2 | | 2 | UEF | UCS4X | 9.62 | 76.75 | 42.92 | | | | | | | | |
| | 4 Wire Copper Unbundled Sub-Loop Distribution - Zone 3 | | 3 | UEF | UCS4X | 13.04 | 76.75 | 42.92 | | | | | | | | |
| | Order Coordination for Unbundled Sub-Loops, per sub-loop pair | | | UEF | USBMC | | 7.92 | 7.92 | | | | | | | | |
| | Loop Tagging Service Level 1, Unbundled Copper Loop, Non-Designed and Distribution Subloops | | | UEF, UEANL | URETL | | 8.93 | 0.88 | | | | | | | | |
| | Loop Testing - Basic 1st Half Hour | | | UEF | URET1 | | 33.17 | 0.00 | | | | | | | | |
| | Loop Testing - Basic Additional Half Hour | | | UEF | URETA | | 19.28 | 19.28 | | | | | | | | |
| **Unbundled Sub-Loop Modification** | | | | | | | | | | | | | | | | |
| | Unbundled Sub-Loop Modification - 2-W Copper Dist Load Coil/Equip Removal per 2-W PR | | | UEF | ULM2X | | 0.00 | 0.00 | | | | | | | | |
| | Unbundled Sub-loop Modification - 4-W Copper Dist Load Coil/Equip Removal per 4-W PR | | | UEF | ULM4X | | 0.00 | 0.00 | | | | | | | | |
| | Unbundled Loop Modification, Removal of Bridge Tap, per unbundled loop | | | UEF | ULMBT | | 224.55 | 4.29 | | | | | | | | |
| **Unbundled Network Terminating Wire (UNTW)** | | | | | | | | | | | | | | | | |
| | Unbundled Network Terminating Wire (UNTW) per Pair | | | UENTW | UENPP | 0.51 | 14.72 | 14.72 | | | | | | | | |
| **Network Interface Device (NID)** | | | | | | | | | | | | | | | | |
| | Network Interface Device (NID) - 1-2 lines | | | UENTW | UND12 | | 86.37 | 56.69 | | | | | | | | |
| | Network Interface Device (NID) - 1-6 lines | | | UENTW | UND16 | | 127.93 | 98.21 | | | | | | | | |
| | Network Interface Device Cross Connect - 2 W | | | UENTW | UNDC2 | | 5.73 | 5.73 | | | | | | | | |
| | Network Interface Device Cross Connect - 4W | | | UENTW | UNDC4 | | 5.73 | 5.73 | | | | | | | | |
| **UNE OTHER, PROVISIONING ONLY - NO RATE** | | | | | | | | | | | | | | | | |

| CATEGORY | RATE ELEMENTS | Interim | Zone | BCS | USOC | RATES($) | | | | | Svc Order Submitted Elec per LSR | Svc Order Submitted Manually per LSR | Incremental Charge - Manual Svc Order vs. Electronic-1st | Incremental Charge - Manual Svc Order vs. Electronic-Add'l | Incremental Charge - Manual Svc Order vs. Electronic-Disc 1st | Incremental Charge - Manual Svc Order vs. Electronic-Disc Add'l |
|---|---|---|---|---|---|---|---|---|---|---|---|---|---|---|---|---|
| | | | | | | Rec | Nonrecurring | | Nonrecurring Disconnect | | OSS Rates($) | | | | | |
| | | | | | | | First | Add'l | First | Add'l | SOMEC | SOMAN | SOMAN | SOMAN | SOMAN | SOMAN |
| | Unbundled Contact Name, Provisioning Only - no rate | | | UAL, UCL, UDC, UDL, UDN, UEA, UHL, UEANL, UEF, UEQ, UENTW, NTCVG, NTCUD, NTCD1, USL | UNECN | 0.00 | 0.00 | | | | | | | | | |
| | Unbundled DS1 Loop - Superframe Format Option - no rate | | | USL | CCOSF | 0.00 | 0.00 | | | | | | | | | |
| | Unbundled DS1 Loop - Expanded Superframe Format option - no rate | | | USL | CCOEF | 0.00 | 0.00 | | | | | | | | | |
| | NID - Dispatch and Service Order for NID installation | | | UENTW | UNDBX | 0.00 | 0.00 | | | | | | | | | |
| | UNTW Circuit Establishment, Provisioning Only - No Rate | | | UENTW | UENCE | 0.00 | 0.00 | | | | | | | | | |
| **HIGH CAPACITY UNBUNDLED LOCAL LOOP** | | | | | | | | | | | | | | | | |
| | **NOTE: minimum billing period of three months for DS3/STS-1 Local Loop** | | | | | | | | | | | | | | | |
| | High Capacity Unbundled Local Loop - DS3 - Per Mile per month | | | UE3 | 1L5ND | 12.95 | | | | | | | | | | |
| | High Capacity Unbundled Local Loop - DS3 - Facility Termination per month | | | UE3 | UE3PX | 229.90 | 438.46 | 256.30 | | | | | | | | |
| | High Capacity Unbundled Local Loop - STS-1 - Per Mile per month | | | UDLSX | 1L5ND | 12.95 | | | | | | | | | | |
| | High Capacity Unbundled Local Loop - STS-1 - Facility Termination per month | | | UDLSX | UDLS1 | 257.82 | 438.46 | 256.30 | | | | | | | | |
| **LOOP MAKE-UP** | | | | | | | | | | | | | | | | |
| | Loop Makeup - Preordering Without Reservation, per working or spare facility queried (Manual). | | | UMK | UMKLW | | 23.29 | 23.29 | | | | | | | | |
| | Loop Makeup - Preordering With Reservation, per spare facility queried (Manual). | | | UMK | UMKLP | | 24.70 | 24.70 | | | | | | | | |
| | Loop Makeup--With or Without Reservation, per working or spare facility queried (Mechanized) | | | UMK | UMKMQ | | 0.19 | 0.19 | | | | | | | | |
| **LINE SPLITTING** | | | | | | | | | | | | | | | | |
| | **END USER ORDERING-CENTRAL OFFICE BASED** | | | | | | | | | | | | | | | |
| | Line Splitting - per line activation DLEC owned splitter | | | UEPSR UEPSB | UREOS | 0.61 | 15.53 | 7.79 | | | | | | | | |
| | Line Splitting - per line activation BST owned - physical | | | UEPSR UEPSB | UREBP | 0.6409 | 17.97 | 10.29 | | | | | | | | |
| | Line Splitting - per line activation BST owned - virtual | | | UEPSR UEPSB | UREBV | 0.6325 | 17.87 | 10.29 | | | | | | | | |
| | **UNBUNDLED EXCHANGE ACCESS LOOP** | | | | | | | | | | | | | | | |
| | **2-WIRE ANALOG VOICE GRADE LOOP** | | | | | | | | | | | | | | | |
| | 2 Wire Analog Voice Grade Loop-Service Level 1-Line Splitting-Zone 1 | | 1 | UEPSR UEPSB | UEALS | 10.82 | 36.54 | 16.87 | 0.00 | 0.00 | | | | | | |
| | 2 Wire Analog Voice Grade Loop-Service Level 1-Line Splitting-Zone 1 | | 1 | UEPSR UEPSB | UEABS | 10.82 | 36.54 | 16.87 | 0.00 | 0.00 | | | | | | |
| | 2 Wire Analog Voice Grade Loop- Service Level 1-Line Splitting-Zone 2 | | 2 | UEPSR UEPSB | UEALS | 16.21 | 36.54 | 16.87 | 0.00 | 0.00 | | | | | | |
| | 2 Wire Analog Voice Grade Loop- Service Level 1-Line Splitting-Zone 2 | | 2 | UEPSR UEPSB | UEABS | 16.21 | 36.54 | 16.87 | 0.00 | 0.00 | | | | | | |
| | 2 Wire Analog Voice Grade Loop-Service Level 1-Line Splitting-Zone 3 | | 3 | UEPSR UEPSB | UEALS | 24.08 | 36.54 | 16.87 | 0.00 | 0.00 | | | | | | |
| | 2 Wire Analog Voice Grade Loop-Service Level 1-Line Splitting-Zone 3 | | 3 | UEPSR UEPSB | UEABS | 24.08 | 36.54 | 16.87 | 0.00 | 0.00 | | | | | | |
| | **PHYSICAL COLLOCATION** | | | | | | | | | | | | | | | |
| | Physical Collocation-2 Wire Cross Connects (Loop) for Line Splitting | | | UEPSR UEPSB | PE1LS | 0.0309 | 19.77 | 14.95 | 0.00 | 0.00 | | | | | | |
| | **VIRTUAL COLLOCATION** | | | | | | | | | | | | | | | |
| | Virtual Collocation-2 Wire Cross Connects (Loop) for Line Splitting | | | UEPSR UEPSB | VE1LS | 0.0287 | 33.96 | 32.08 | 0.00 | 0.00 | | | | | | |
| **UNBUNDLED DEDICATED TRANSPORT** | | | | | | | | | | | | | | | | |
| | **INTEROFFICE CHANNEL - DEDICATED TRANSPORT** | | | | | | | | | | | | | | | |
| | Interoffice Channel - Dedicated Transport - 2-Wire Voice Grade - Per Mile per month | | | U1TVX | 1L5XX | 0.0095 | | | | | | | | | | |
| | Interoffice Channel - Dedicated Transport- 2- Wire Voice Grade - Facility Termination | | | U1TVX | U1TV2 | 12.12 | 39.36 | 26.62 | | | | | | | | |

| UNBUNDLED NETWORK ELEMENTS - North Carolina | | | | | | | | | | | | | | Attachment: 2 Exh. A | | | |
|---|---|---|---|---|---|---|---|---|---|---|---|---|---|---|---|---|---|
| CATEGORY | | RATE ELEMENTS | Interim | Zone | BCS | USOC | RATES($) | | | | | Svc Order Submitted Elec per LSR | Svc Order Submitted Manually per LSR | Incremental Charge - Manual Svc Order vs. Electronic-1st | Incremental Charge - Manual Svc Order vs. Electronic-Add'l | Incremental Charge - Manual Svc Order vs. Electronic-Disc 1st | Incremental Charge - Manual Svc Order vs. Electronic-Disc Add'l |
| | | | | | | | Rec | Nonrecurring | | Nonrecurring Disconnect | | OSS Rates($) | | | | | |
| | | | | | | | | First | Add'l | First | Add'l | SOMEC | SOMAN | SOMAN | SOMAN | SOMAN | SOMAN |
| | | Interoffice Channel - Dedicated Transport- 2-Wire Voice Grade Rev Bat. - Per Mile per month | | | U1TVX | 1L5XX | 0.0095 | | | | | | | | | | |
| | | Interoffice Channel - Dedicated Transport- 2- Wire VG Rev Bat. - Facility Termination | | | U1TVX | U1TR2 | 12.12 | 39.36 | 26.62 | | | | | | | | |
| | | Interoffice Channel - Dedicated Transport - 4-Wire Voice Grade - Per Mile per month | | | U1TVX | 1L5XX | 0.0095 | | | | | | | | | | |
| | | Interoffice Channel - Dedicated Transport - 4- Wire Voice Grade - Facility Termination | | | U1TVX | U1TV4 | 10.19 | 39.36 | 26.62 | | | | | | | | |
| | | Interoffice Channel - Dedicated Transport - 56 kbps - per mile per month | | | U1TDX | 1L5XX | 0.0095 | | | | | | | | | | |
| | | Interoffice Channel - Dedicated Transport - 56 kbps - Facility Termination | | | U1TDX | U1TD5 | 7.47 | 39.37 | 26.62 | | | | | | | | |
| | | Interoffice Channel - Dedicated Transport - 64 kbps - per mile per month | | | U1TDX | 1L5XX | 0.0095 | | | | | | | | | | |
| | | Interoffice Channel - Dedicated Transport - 64 kbps - Facility Termination | | | U1TDX | U1TD6 | 7.47 | 39.37 | 26.62 | | | | | | | | |
| | | Interoffice Channel - Dedicated Channel - DS1 - Per Mile per month | | | U1TD1 | 1L5XX | 0.1938 | | | | | | | | | | |
| | | Interoffice Channel - Dedicated Tranport - DS1 - Facility Termination | | | U1TD1 | U1TF1 | 31.19 | 86.69 | 79.44 | | | | | | | | |
| | | Interoffice Channel - Dedicated Transport - DS3 - Per Mile per month | | | U1TD3 | 1L5XX | 4.44 | | | | | | | | | | |
| | | Interoffice Channel - Dedicated Transport - DS3 - Facility Termination per month | | | U1TD3 | U1TF3 | 329.91 | 270.69 | 158.05 | | | | | | | | |
| | | Interoffice Channel - Dedicated Transport - STS-1 - Per Mile per month | | | U1TS1 | 1L5XX | 4.44 | | | | | | | | | | |
| | | Interoffice Channel - Dedicated Transport - STS-1 - Facility Termination | | | U1TS1 | U1TFS | 339.20 | 270.69 | 158.05 | | | | | | | | |
| | **UNBUNDLED DARK FIBER** | | | | | | | | | | | | | | | | |
| | | Dark Fiber, Per Four Fiber Strands, Per Route Mile Or Fraction Thereof - Interoffice Transport | | | UDF, UDFCX | 1L5DF | 24.77 | 620.60 | 133.88 | | | | | | | | |
| **911 PBX LOCATE** | | | | | | | | | | | | | | | | | |
| | **911 PBX LOCATE DATABASE CAPABILITY** | | | | | | | | | | | | | | | | |
| | | Service Establishment per CLEC per End User Account | | | 9PBDC | 9PBEU | | 1,823.00 | | | | | | | | | |
| | | Changes to TN Range or Customer Profile | | | 9PBDC | 9PBTN | | 182.45 | | | | | | | | | |
| | | Per Telephone Number (Monthly) | | | 9PBDC | 9PBMM | 0.07 | | | | | | | | | | |
| | | Change Company (Service Provider) ID | | | 9PBDC | 9PBPC | | 535.57 | | | | | | | | | |
| | | PBX Locate Service Support per CLEC (MonthIt) | | | 9PBDC | 9PBMR | 165.63 | | | | | | | | | | |
| | | Service Order Charge | | | 9PBDC | 9PBSC | | 15.20 | | | | | | | | | |
| | **911 PBX LOCATE TRANSPORT COMPONENT** | | | | | | | | | | | | | | | | |
| | **See Att 3** | | | | | | | | | | | | | | | | |
| **ENHANCED EXTENDED LINK (EELs)** | | | | | | | | | | | | | | | | | |
| | **NOTE: The monthly recurring and non-recurring charges below will apply and the Switch-As-Is Charge will not apply for UNE combinations provisioned as ' Ordinarily Combined' Network Elements.** | | | | | | | | | | | | | | | | |
| | **NOTE: The monthly recurring and the Switch-As-Is Charge and not the non-recurring charges below will apply for UNE combinations provisioned as ' Currently Combined' Network Elements.** | | | | | | | | | | | | | | | | |
| | **EXTENTED 2-WIRE VOICE GRADE EXTENDED LOOP WITH DEDICATED DS1 INTEROFFICE TRANSPORT** | | | | | | | | | | | | | | | | |
| | | First 2-Wire VG Loop (SL2) in Combination - Zone 1 | | 1 | UNCVX | UEAL2 | 11.96 | 385.26 | 72.08 | | | | | | | | |
| | | First 2-Wire VG Loop (SL2) in Combination - Zone 2 | | 2 | UNCVX | UEAL2 | 17.36 | 385.26 | 72.08 | | | | | | | | |
| | | First 2-Wire VG Loop (SL2) in Combination - Zone 3 | | 3 | UNCVX | UEAL2 | 25.23 | 385.26 | 72.08 | | | | | | | | |
| | | Interoffice Transport - Dedicated - DS1 combination - Per Mile per month | | | UNC1X | 1L5XX | 0.1938 | | | | | | | | | | |
| | | Interoffice Transport - Dedicated - DS1 combination - Facility Termination per month | | | UNC1X | U1TF1 | 31.06 | 234.02 | 162.52 | | | | | | | | |
| | | 1/0 Channelization System in combination Per Month | | | UNC1X | MQ1 | 70.84 | 170.57 | 0.00 | | | | | | | | |
| | | Voice Grade COCI - Per Month | | | UNCVX | 1D1VG | 0.4329 | 54.14 | 17.51 | | | | | | | | |
| | | Each Additional 2-Wire VG Loop (SL 2) in Combination - Zone 1 | | 1 | UNCVX | UEAL2 | 11.96 | 385.26 | 72.08 | | | | | | | | |
| | | Each Additional 2-Wire VG Loop (SL 2) in Combination - Zone 2 | | 2 | UNCVX | UEAL2 | 17.36 | 385.26 | 72.08 | | | | | | | | |

| CATEGORY | | RATE ELEMENTS | Interim | Zone | BCS | USOC | RATES($) | | | | | Svc Order Submitted Elec per LSR | Svc Order Submitted Manually per LSR | Incremental Charge - Manual Svc Order vs. Electronic-1st | Incremental Charge - Manual Svc Order vs. Electronic-Add'l | Incremental Charge - Manual Svc Order vs. Electronic-Disc 1st | Incremental Charge - Manual Svc Order vs. Electronic-Disc Add'l |
|---|---|---|---|---|---|---|---|---|---|---|---|---|---|---|---|---|---|
| | | | | | | | Rec | Nonrecurring | | Nonrecurring Disconnect | | OSS Rates($) | | | | | |
| | | | | | | | | First | Add'l | First | Add'l | SOMEC | SOMAN | SOMAN | SOMAN | SOMAN | SOMAN |
| | | Each Additional 2-Wire VG Loop (SL 2) in Combination - Zone 3 | | 3 | UNCVX | UEAL2 | 25.23 | 385.26 | 72.08 | | | | | | | | |
| | | Voice Grade COCI - Per Month | | | UNCVX | 1D1VG | 0.4329 | 54.14 | 17.51 | | | | | | | | |
| | EXTENDED 4-WIRE VOICE GRADE EXTENDED LOOP WITH DEDICATED DS1 INTEROFFICE TRANSPORT | | | | | | | | | | | | | | | | |
| | | First 4-Wire Analog Voice Grade Loop in Combination - Zone 1 | | 1 | UNCVX | UEAL4 | 19.52 | 385.26 | 72.08 | | | | | | | | |
| | | First 4-Wire Analog Voice Grade Loop in Combination - Zone 2 | | 2 | UNCVX | UEAL4 | 24.74 | 385.26 | 72.08 | | | | | | | | |
| | | First 4-Wire Analog Voice Grade Loop in Combination - Zone 3 | | 3 | UNCVX | UEAL4 | 46.11 | 385.26 | 72.08 | | | | | | | | |
| | | Interoffice Transport - Dedicated - DS1 combination - Per Mile Per Month | | | UNC1X | 1L5XX | 0.1938 | | | | | | | | | | |
| | | Interoffice Transport - Dedicated - DS1 - Facility Termination Per Month | | | UNC1X | U1TF1 | 31.06 | 234.02 | 162.52 | | | | | | | | |
| | | 1/0 Channel System in combination Per Month | | | UNC1X | MQ1 | 70.84 | 170.57 | 0.00 | | | | | | | | |
| | | Voice Grade COCI in combination - per month | | | UNCVX | 1D1VG | 0.4329 | 54.14 | 17.51 | | | | | | | | |
| | | Additional 4-Wire Analog Voice Grade Loop in same DS1 Interoffice Transport Combination - Zone 1 | | 1 | UNCVX | UEAL4 | 19.52 | 385.26 | 72.08 | | | | | | | | |
| | | Additional 4-Wire Analog Voice Grade Loop in same DS1 Interoffice Transport Combination - Zone 2 | | 2 | UNCVX | UEAL4 | 24.74 | 385.26 | 72.08 | | | | | | | | |
| | | Additional 4-Wire Analog Voice Grade Loop in same DS1 Interoffice Transport Combination - Zone 3 | | 3 | UNCVX | UEAL4 | 46.11 | 385.26 | 72.08 | | | | | | | | |
| | | Additional Voice Grade COCI in combination - per month | | | UNCVX | 1D1VG | 0.4329 | 54.14 | 17.51 | | | | | | | | |
| | EXTENDED 4-WIRE 56 KBPS EXTENDED DIGITAL LOOP WITH DEDICATED DS1 INTEROFFICE TRANSPORT | | | | | | | | | | | | | | | | |
| | | First 4-Wire 56Kbps Digital Grade Loop in Combination - Zone 1 | | 1 | UNCDX | UDL56 | 21.98 | 385.26 | 72.08 | | | | | | | | |
| | | First 4-Wire 56Kbps Digital Grade Loop in Combination - Zone 2 | | 2 | UNCDX | UDL56 | 27.58 | 385.26 | 72.08 | | | | | | | | |
| | | First 4-Wire 56Kbps Digital Grade Loop in Combination - Zone 3 | | 3 | UNCDX | UDL56 | 43.08 | 385.26 | 72.08 | | | | | | | | |
| | | Interoffice Transport - Dedicated - DS1 combination - Per Mile Per Month | | | UNC1X | 1L5XX | 0.1938 | | | | | | | | | | |
| | | Interoffice Transport - Dedicated - DS1 - combination Facility Termination Per Month | | | UNC1X | U1TF1 | 31.06 | 234.02 | 162.52 | | | | | | | | |
| | | 1/0 Channel System in combination Per Month | | | UNC1X | MQ1 | 70.84 | 170.57 | 0.00 | | | | | | | | |
| | | OCU-DP COCI (data) per month (2.4-64kbs) | | | UNCDX | 1D1DD | 0.9199 | 54.14 | 17.51 | | | | | | | | |
| | | Additional 4-Wire 56Kbps Digital Grade Loop in same DS1 Interoffice Transport Combination - Zone 1 | | 1 | UNCDX | UDL56 | 21.98 | 385.26 | 72.08 | | | | | | | | |
| | | Additional 4-Wire 56Kbps Digital Grade Loop in same DS1 Interoffice Transport Combination - Zone 2 | | 2 | UNCDX | UDL56 | 27.58 | 385.26 | 72.08 | | | | | | | | |
| | | Additional 4-Wire 56Kbps Digital Grade Loop in same DS1 Interoffice Transport Combination - Zone 3 | | 3 | UNCDX | UDL56 | 43.08 | 385.26 | 72.08 | | | | | | | | |
| | | Additional OCU-DP COCI (data) - in combination per month (2.4-64kbs) | | | UNCDX | 1D1DD | 0.9199 | 54.14 | 17.51 | | | | | | | | |
| | EXTENDED 4-WIRE 64 KBPS EXTENDED DIGITAL LOOP WITH DEDICATED DS1 INTEROFFICE TRANSPORT | | | | | | | | | | | | | | | | |
| | | First 4-Wire 64Kbps Digital Grade Loop in Combination - Zone 1 | | 1 | UNCDX | UDL64 | 21.98 | 385.26 | 72.08 | | | | | | | | |
| | | First 4-Wire 64Kbps Digital Grade Loop in Combination - Zone 2 | | 2 | UNCDX | UDL64 | 27.58 | 385.26 | 72.08 | | | | | | | | |
| | | First 4-Wire 64Kbps Digital Grade Loop in Combination - Zone 3 | | 3 | UNCDX | UDL64 | 43.08 | 385.26 | 72.08 | | | | | | | | |
| | | Interoffice Transport - Dedicated - DS1 combination - Per Mile Per Month | | | UNC1X | 1L5XX | 0.1938 | | | | | | | | | | |
| | | interoffice Transport - Dedicated - DS1 combination - Facility Termination Per Month | | | UNC1X | U1TF1 | 31.06 | 234.02 | 162.52 | | | | | | | | |
| | | 1/0 Channel System in combination Per Month | | | UNC1X | MQ1 | 70.84 | 170.57 | 0.00 | | | | | | | | |
| | | OCU-DP COCI (data) - in combination - per month (2.4-64kbs) | | | UNCDX | 1D1DD | 0.9199 | 54.14 | 17.51 | | | | | | | | |
| | | Additional 4-Wire 64Kbps Digital Grade Loop in same DS1 Interoffice Transport Combination - Zone 1 | | 1 | UNCDX | UDL64 | 21.98 | 385.26 | 72.08 | | | | | | | | |

| CATEGORY | RATE ELEMENTS | Interim | Zone | BCS | USOC | RATES($) | | | | | Svc Order Submitted Elec per LSR | Svc Order Submitted Manually per LSR | Incremental Charge - Manual Svc Order vs. Electronic-1st | Incremental Charge - Manual Svc Order vs. Electronic-Add'l | Incremental Charge - Manual Svc Order vs. Electronic-Disc 1st | Incremental Charge - Manual Svc Order vs. Electronic-Disc Add'l |
|---|---|---|---|---|---|---|---|---|---|---|---|---|---|---|---|---|
| | | | | | | Rec | Nonrecurring | | Nonrecurring Disconnect | | OSS Rates($) | | | | | |
| | | | | | | | First | Add'l | First | Add'l | SOMEC | SOMAN | SOMAN | SOMAN | SOMAN | SOMAN |
| | Additional 4-Wire 64Kbps Digital Grade Loop in same DS1 Interoffice Transport Combination - Zone 2 | | 2 | UNCDX | UDL64 | 27.58 | 385.26 | 72.08 | | | | | | | | |
| | Additional 4-Wire 64Kbps Digital Grade Loop in same DS1 Interoffice Transport Combination - Zone 3 | | 3 | UNCDX | UDL64 | 43.08 | 385.26 | 72.08 | | | | | | | | |
| | Additional OCU-DP COCI (data) - in combination - per month (2.4-64kbs) | | | UNCDX | 1D1DD | 0.9199 | 54.14 | 17.51 | | | | | | | | |
| | **EXTENDED 4-WIRE DS1 DIGITAL EXTENDED LOOP WITH DEDICATED DS1 INTEROFFICE TRANSPORT** | | | | | | | | | | | | | | | |
| | 4-Wire DS1 Digital Loop in Combination - Zone 1 | | 1 | UNC1X | USLXX | 63.62 | 412.03 | 139.55 | | | | | | | | |
| | 4-Wire DS1 Digital Loop in Combination - Zone 2 | | 2 | UNC1X | USLXX | 104.40 | 412.03 | 139.55 | | | | | | | | |
| | 4-Wire DS1 Digital Loop in Combination - Zone 3 | | 3 | UNC1X | USLXX | 210.22 | 412.03 | 139.55 | | | | | | | | |
| | Interoffice Transport - Dedicated - DS1 combination - Per Mile Per Month | | | UNC1X | 1L5XX | 0.1938 | | | | | | | | | | |
| | Interoffice Transport - Dedicated - DS1 combination - Facility Termination Per Month | | | UNC1X | U1TF1 | 31.06 | 234.02 | 162.52 | | | | | | | | |
| | **EXTENDED 4-WIRE DS1 DIGITAL EXTENDED LOOP WITH DEDICATED DS3 INTEROFFICE TRANSPORT** | | | | | | | | | | | | | | | |
| | First DS1Loop in Combination - Zone 1 | | 1 | UNC1X | USLXX | 63.62 | 412.03 | 139.55 | | | | | | | | |
| | First DS1Loop in Combination - Zone 2 | | 2 | UNC1X | USLXX | 104.40 | 412.03 | 139.55 | | | | | | | | |
| | First DS1Loop in Combination - Zone 3 | | 3 | UNC1X | USLXX | 210.22 | 412.03 | 139.55 | | | | | | | | |
| | Interoffice Transport - Dedicated - DS3 combination - Per Mile Per Month | | | UNC3X | 1L5XX | 4.44 | | | | | | | | | | |
| | Interoffice Transport - Dedicated - DS3 - Facility Termination per month | | | UNC3X | U1TF3 | 329.91 | 802.81 | 146.02 | | | | | | | | |
| | 3/1Channel System in combination per month | | | UNC3X | MQ3 | 84.32 | 0.00 | 0.00 | | | | | | | | |
| | DS1 COCI in combination per month | | | UNC1X | UC1D1 | 8.43 | 54.14 | 17.51 | | | | | | | | |
| | Additional DS1Loop in DS3 Interoffice Transport Combination - Zone 1 | | 1 | UNC1X | USLXX | 63.62 | 412.03 | 139.55 | | | | | | | | |
| | Additional DS1Loop in DS3 Interoffice Transport Combination - Zone 2 | | 2 | UNC1X | USLXX | 104.40 | 412.03 | 139.55 | | | | | | | | |
| | Additional DS1Loop in DS3 Interoffice Transport Combination - Zone 3 | | 3 | UNC1X | USLXX | 210.22 | 412.03 | 139.55 | | | | | | | | |
| | Additoinal DS1 COCI in combination per month | | | UNC1X | UC1D1 | 8.43 | 54.14 | 17.51 | | | | | | | | |
| | **EXTENDED 2-WIRE VOICE GRADE EXTENDED LOOP/ 2 WIRE VOICE GRADE INTEROFFICE TRANSPORT** | | | | | | | | | | | | | | | |
| | 2-WireVG Loop in combination - Zone 1 | | 1 | UNCVX | UEAL2 | 11.96 | 385.26 | 72.08 | | | | | | | | |
| | 2-WireVG Loop in combination - Zone 2 | | 2 | UNCVX | UEAL2 | 17.36 | 385.26 | 72.08 | | | | | | | | |
| | 2-WireVG Loop in combination - Zone 3 | | 3 | UNCVX | UEAL2 | 25.23 | 385.26 | 72.08 | | | | | | | | |
| | Interoffice Transport - 2-wire VG - Dedicated- Per Mile Per Month | | | UNCVX | 1L5XX | 0.0095 | | | | | | | | | | |
| | Interoffice Transport - 2-wire VG - Dedicated - Facility Termination per month | | | UNCVX | U1TV2 | 12.12 | 131.81 | 78.34 | | | | | | | | |
| | **EXTENDED 4-WIRE VOICE GRADE EXTENDED LOOP/ 4 WIRE VOICE GRADE INTEROFFICE TRANSPORT** | | | | | | | | | | | | | | | |
| | 4-WireVG Loop in combination - Zone 1 | | 1 | UNCVX | UEAL4 | 19.52 | 385.26 | 72.08 | | | | | | | | |
| | 4-WireVG Loop in combination - Zone 2 | | 2 | UNCVX | UEAL4 | 24.74 | 385.26 | 72.08 | | | | | | | | |
| | 4-WireVG Loop in combination - Zone 3 | | 3 | UNCVX | UEAL4 | 46.11 | 385.26 | 72.08 | | | | | | | | |
| | Interoffice Transport - 4-wire VG - Dedicated - Per Mile Per Month | | | UNCVX | 1L5XX | 0.0095 | | | | | | | | | | |
| | Interoffice Transport - 4-wire VG - Dedicated - Facility Termination per month | | | UNCVX | U1TV4 | 10.19 | 131.81 | 78.34 | | | | | | | | |
| | **EXTENDED DS3 DIGITAL EXTENDED LOOP WITH DEDICATED DS3 INTEROFFICE TRANSPORT** | | | | | | | | | | | | | | | |
| | DS3 Local Loop in combination - per mile per month | | | UNC3X | 1L5ND | 12.95 | | | | | | | | | | |
| | DS3 Local Loop in combination - Facility Termination per month | | | UNC3X | UE3PX | 229.90 | 802.81 | 146.02 | | | | | | | | |
| | Interoffice Transport - Dedicated - DS3 - Per Mile per month | | | UNC3X | 1L5XX | 4.44 | | | | | | | | | | |
| | Interoffice Transport - Dedicated - DS3 combination - Facility Termination per month | | | UNC3X | U1TF3 | 329.91 | 802.81 | 146.02 | | | | | | | | |
| | **EXTENDED STS-1 DIGITAL EXTENDED LOOP WITH DEDICATED STS-1 INTEROFFICE TRANSPORT** | | | | | | | | | | | | | | | |
| | STS-1 Local Lolp in combination - per mile per month | | | UNCSX | 1L5ND | 12.95 | | | | | | | | | | |
| | STS-1 Local Loop in combination - Facility Termination per month | | | UNCSX | UDLS1 | 339.20 | 3,073.55 | 1,245.84 | | | | | | | | |

| CATEGORY | RATE ELEMENTS | Interim | Zone | BCS | USOC | RATES($) | | | | | Svc Order Submitted Elec per LSR | Svc Order Submitted Manually per LSR | Incremental Charge - Manual Svc Order vs. Electronic-1st | Incremental Charge - Manual Svc Order vs. Electronic-Add'l | Incremental Charge - Manual Svc Order vs. Electronic-Disc 1st | Incremental Charge - Manual Svc Order vs. Electronic-Disc Add'l |
|---|---|---|---|---|---|---|---|---|---|---|---|---|---|---|---|---|
| | | | | | | Rec | Nonrecurring | | Nonrecurring Disconnect | | OSS Rates($) | | | | | |
| | | | | | | | First | Add'l | First | Add'l | SOMEC | SOMAN | SOMAN | SOMAN | SOMAN | SOMAN |
| | Interoffice Transport - Dedicated - STS-1 combination - per mile per month | | | UNCSX | 1L5XX | 4.44 | | | | | | | | | | |
| | Interoffice Transport - Dedicated - STS-1 combination - Facility Termination per month | | | UNCSX | U1TFS | 339.20 | 802.81 | 146.02 | | | | | | | | |
| **EXTENDED 2-WIRE ISDN EXTENDED LOOP WITH DS1 INTEROFFICE TRANSPORT** | | | | | | | | | | | | | | | | |
| | First 2-Wire ISDN Loop in Combination - Zone 1 | | 1 | UNCNX | U1L2X | 19.78 | 385.26 | 72.08 | | | | | | | | |
| | First 2-Wire ISDN Loop in Combination - Zone 2 | | 2 | UNCNX | U1L2X | 26.16 | 385.26 | 72.08 | | | | | | | | |
| | First 2-Wire ISDN Loop in Combination - Zone 3 | | 3 | UNCNX | U1L2X | 35.37 | 385.26 | 72.08 | | | | | | | | |
| | Interoffice Transport - Dedicated - DS1 combination - per mile per month | | | UNC1X | 1L5XX | 0.1938 | | | | | | | | | | |
| | Interoffice Transport - Dedicated - DS1 combination - Facility Termination per month | | | UNC1X | U1TF1 | 31.06 | 234.02 | 162.52 | | | | | | | | |
| | 1/0 Channel System in combination - per month | | | UNC1X | MQ1 | 70.84 | 170.57 | 0.00 | | | | | | | | |
| | 2-wire ISDN COCI (BRITE) - in combination - per month | | | UNCNX | UC1CA | 1.53 | 54.14 | 17.51 | | | | | | | | |
| | Additional 2-wire ISDN Loop in same DS1Interoffice Transport Combination - Zone 1 | | 1 | UNCNX | U1L2X | 19.78 | 385.26 | 72.08 | | | | | | | | |
| | Additional 2-wire ISDN Loop in same DS1Interoffice Transport Combination - Zone 2 | | 2 | UNCNX | U1L2X | 26.16 | 385.26 | 72.08 | | | | | | | | |
| | Additional 2-wire ISDN Loop in same DS1Interoffice Transport Combination - Zone 3 | | 3 | UNCNX | U1L2X | 35.37 | 385.26 | 72.08 | | | | | | | | |
| | Additional 2-wire ISDN COCI (BRITE) - in combination- per month | | | UNCNX | UC1CA | 1.53 | 54.14 | 17.51 | | | | | | | | |
| **EXTENDED 4-WIRE DS1 DIGITAL EXTENDED LOOP WITH DEDICATED STS-1 INTEROFFICE TRANSPORT** | | | | | | | | | | | | | | | | |
| | First DS1 Loop Combination - Zone 1 | | 1 | UNC1X | USLXX | 63.62 | 412.03 | 139.55 | | | | | | | | |
| | First DS1 Loop Combination - Zone 2 | | 2 | UNC1X | USLXX | 104.40 | 412.03 | 139.55 | | | | | | | | |
| | First DS1 Loop Combination - Zone 3 | | 3 | UNC1X | USLXX | 210.22 | 412.03 | 139.55 | | | | | | | | |
| | Interoffice Transport - Dedicated - STS-1 combination - Per Mile Per Month | | | UNCSX | 1L5XX | 4.44 | | | | | | | | | | |
| | Interoffice Transport - Dedicated - STS-1 combination - Facility Termination per month | | | UNCSX | U1TFS | 339.20 | 802.81 | 146.02 | | | | | | | | |
| | 3/1 Channel System in combination per month | | | UNCSX | MQ3 | 84.32 | 0.00 | 0.00 | | | | | | | | |
| | DS1 COCI in combination per month | | | UNC1X | UC1D1 | 8.43 | 54.14 | 17.51 | | | | | | | | |
| | Additional DS1Loop in the same STS-1 Interoffice Transport Combination - Zone 1 | | 1 | UNC1X | USLXX | 63.62 | 412.03 | 139.55 | | | | | | | | |
| | Additional DS1Loop in the same STS-1 Interoffice Transport Combination - Zone 2 | | 2 | UNC1X | USLXX | 104.40 | 412.03 | 139.55 | | | | | | | | |
| | Additional DS1Loop in the same STS-1 Interoffice Transport Combination - Zone 3 | | 3 | UNC1X | USLXX | 210.22 | 412.03 | 139.55 | | | | | | | | |
| | DS1 COCI in combination per month | | | UNC1X | UC1D1 | 8.43 | 54.14 | 17.51 | | | | | | | | |
| **EXTENDED 4-WIRE 56 KBPS DIGITAL EXTENDED LOOP WITH 56 KBPS INTEROFFICE TRANSPORT** | | | | | | | | | | | | | | | | |
| | 4-wire 56 kbps Local Loop in combination - Zone 1 | | 1 | UNCDX | UDL56 | 21.98 | 385.26 | 72.08 | | | | | | | | |
| | 4-wire 56 kbps Local Loop in combination - Zone 2 | | 2 | UNCDX | UDL56 | 27.58 | 385.26 | 72.08 | | | | | | | | |
| | 4-wire 56 kbps Local Loop in combination - Zone 3 | | 3 | UNCDX | UDL56 | 43.08 | 385.26 | 72.08 | | | | | | | | |
| | Interoffice Transport - Dedicated - 4-wire 56 kbps combination - Per Mile per month | | | UNCDX | 1L5XX | 0.0095 | | | | | | | | | | |
| | Interoffice Transport - Dedicated - 4-wire 56 kbps combination - Facility Termination per month | | | UNCDX | U1TD5 | 7.47 | 131.81 | 78.34 | | | | | | | | |
| **EXTENDED 4-WIRE 64 KBPS DIGITAL EXTENDED LOOP WITH 64 KBPS INTEROFFICE TRANSPORT** | | | | | | | | | | | | | | | | |
| | 4-wire 64 kbps Local Loop in Combination - Zone 1 | | 1 | UNCDX | UDL64 | 21.98 | 385.26 | 72.08 | | | | | | | | |
| | 4-wire 64 kbps Local Loop in Combination - Zone 2 | | 2 | UNCDX | UDL64 | 27.58 | 385.26 | 72.08 | | | | | | | | |
| | 4-wire 64 kbps Local Loop in Combination - Zone 3 | | 3 | UNCDX | UDL64 | 43.08 | 385.26 | 72.08 | | | | | | | | |
| | Interoffice Transport - Dedicated - 4-wire 64 kbps combination - Per Mile per month | | | UNCDX | 1L5XX | 0.0095 | | | | | | | | | | |
| | Interoffice Transport - Dedicated - 4-wire 64 kbps combination - Facility Termination per month | | | UNCDX | U1TD6 | 7.47 | 131.81 | 78.34 | | | | | | | | |
| **EXTENDED 2-WIRE VG LOOP WITH DS1 INTEROFFICE TRANSPORT w/ 3/1 MUX** | | | | | | | | | | | | | | | | |
| | First 2-wire VG Loop (SL2) in Combination - Zone 1 | | 1 | UNCVX | UEAL2 | 11.96 | 385.26 | 72.08 | | | | | | | | |
| | First 2-wire VG Loop (SL2) in Combination - Zone 2 | | 2 | UNCVX | UEAL2 | 17.36 | 385.26 | 72.08 | | | | | | | | |
| | First 2-wire VG Loop (SL2) in Combination - Zone 3 | | 3 | UNCVX | UEAL2 | 25.23 | 385.26 | 72.08 | | | | | | | | |

| CATEGORY | | RATE ELEMENTS | Interim | Zone | BCS | USOC | RATES($) | | | | | Svc Order Submitted Elec per LSR | Svc Order Submitted Manually per LSR | Incremental Charge - Manual Svc Order vs. Electronic-1st | Incremental Charge - Manual Svc Order vs. Electronic-Add'l | Incremental Charge - Manual Svc Order vs. Electronic-Disc 1st | Incremental Charge - Manual Svc Order vs. Electronic-Disc Add'l |
|---|---|---|---|---|---|---|---|---|---|---|---|---|---|---|---|---|---|
| | | | | | | | Rec | Nonrecurring | | Nonrecurring Disconnect | | OSS Rates($) | | | | | |
| | | | | | | | | First | Add'l | First | Add'l | SOMEC | SOMAN | SOMAN | SOMAN | SOMAN | SOMAN |
| | | First Interoffice Transport - Dedicated - DS1 combination - Per Mile | | | UNC1X | 1L5XX | 0.1938 | | | | | | | | | | |
| | | First Interoffice Transport - Dedicated - DS1 combination - Facility Termination per month | | | UNC1X | U1TF1 | 31.06 | 234.02 | 162.52 | | | | | | | | |
| | | Per each DS1 Channelization System Per Month | | | UNC1X | MQ1 | 70.84 | 170.57 | 0.00 | | | | | | | | |
| | | Per each Voice Grade COCI - Per Month per month | | | UNCVX | 1D1VG | 0.4329 | 54.14 | 17.51 | | | | | | | | |
| | | 3/1 Channel System in combination per month | | | UNC3X | MQ3 | 84.32 | 0.00 | 0.00 | | | | | | | | |
| | | Per each DS1 COCI in combination per month | | | UNC1X | UC1D1 | 8.43 | 54.14 | 17.51 | | | | | | | | |
| | | Each Additional 2-Wire VG Loop(SL 2) in the same DS1 Interoffice Transport Combination - Zone 1 | | 1 | UNCVX | UEAL2 | 11.96 | 385.26 | 72.08 | | | | | | | | |
| | | Each Additional 2-Wire VG Loop(SL2) in the same DS1 Interoffice Transport Combination - Zone 2 | | 2 | UNCVX | UEAL2 | 17.36 | 385.26 | 72.08 | | | | | | | | |
| | | Each Additional 2-Wire VG Loop(SL2) in the same DS1 Interoffice Transport Combination - Zone 3 | | 3 | UNCVX | UEAL2 | 25.23 | 385.26 | 72.08 | | | | | | | | |
| | | Each Additional Voice Grade COCI in combination - per month | | | UNCVX | 1D1VG | 0.4329 | 54.14 | 17.51 | | | | | | | | |
| | | Each Additional DS1 Interoffice Channel per mile in same 3/1 Channel System per month | | | UNC1X | 1L5XX | 0.1938 | | | | | | | | | | |
| | | Each Additional DS1 Interoffice Channel Facility Termination in same 3/1 Channel System per month | | | UNC1X | U1TF1 | 31.06 | 234.02 | 162.52 | | | | | | | | |
| | | Each Additional DS1 COCI combination per month | | | UNC1X | UC1D1 | 8.43 | 54.14 | 17.51 | | | | | | | | |
| | **EXTENDED 4-WIRE VOICE GRADE LOOP WITH DEDICATED DS1 INTEROFFICE TRANSPORT w/ 3/1 MUX** | | | | | | | | | | | | | | | | |
| | | First 4-Wire Analog Voice Grade Local Loop in Combination - Zone 1 | | 1 | UNCVX | UEAL4 | 19.52 | 385.26 | 72.08 | | | | | | | | |
| | | First 4-Wire Analog Voice Grade Local Loop in Combination - Zone 2 | | 2 | UNCVX | UEAL4 | 24.74 | 385.26 | 72.08 | | | | | | | | |
| | | First 4-Wire Analog Voice Grade Local Loop in Combination - Zone 3 | | 3 | UNCVX | UEAL4 | 46.11 | 385.26 | 72.08 | | | | | | | | |
| | | First Interoffice Transport - Dedicated - DS1 combination - Per Mile Per Month | | | UNC1X | 1L5XX | 0.1938 | | | | | | | | | | |
| | | First Interoffice Transport - Dedicated - DS1 - Facility Termination Per Month | | | UNC1X | U1TF1 | 31.06 | 234.02 | 162.52 | | | | | | | | |
| | | Per each 1/0 Channel System in combination Per Month | | | UNC1X | MQ1 | 70.84 | 170.57 | 0.00 | | | | | | | | |
| | | Per each Voice Grade COCI in combination - per month | | | UNCVX | 1D1VG | 0.4329 | 54.14 | 17.51 | | | | | | | | |
| | | 3/1 Channel System in combination per month | | | UNC3X | MQ3 | 84.32 | 0.00 | 0.00 | | | | | | | | |
| | | Per each DS1 COCI in combination per month | | | UNC1X | UC1D1 | 8.43 | 54.14 | 17.51 | | | | | | | | |
| | | Additional 4-Wire Analog Voice Grade Loop in same DS1 Interoffice Transport Combination - Zone 1 | | 1 | UNCVX | UEAL4 | 19.52 | 385.26 | 72.08 | | | | | | | | |
| | | Additional 4-Wire Analog Voice Grade Loop in same DS1 Interoffice Transport Combination - Zone 2 | | 2 | UNCVX | UEAL4 | 24.74 | 385.26 | 72.08 | | | | | | | | |
| | | Additional 4-Wire Analog Voice Grade Loop in same DS1 Interoffice Transport Combination - Zone 3 | | 3 | UNCVX | UEAL4 | 46.11 | 385.26 | 72.08 | | | | | | | | |
| | | Each Additional DS1 Interoffice Channel per mile in same 3/1 Channel System per month | | | UNC1X | 1L5XX | 0.1938 | | | | | | | | | | |
| | | Each Additional DS1 Interoffice Channel Facility Termination in same 3/1 Channel System per month | | | UNC1X | U1TF1 | 31.06 | 234.02 | 162.52 | | | | | | | | |
| | | Additional Voice Grade COCI - in combination - per month | | | UNCVX | 1D1VG | 0.4329 | 54.14 | 17.51 | | | | | | | | |
| | **EXTENDED 4-WIRE 56 KBPS DIGITAL LOOP WITH DEDICATED DS1 INTEROFFICE TRANSPORT w/ 3/1 MUX** | | | | | | | | | | | | | | | | |
| | | First 4-Wire 56Kbps Digital Grade Local Loop in Combination - Zone 1 | | 1 | UNCDX | UDL56 | 21.98 | 385.26 | 72.08 | | | | | | | | |
| | | First 4-Wire 56Kbps Digital Grade Local Loop in Combination - Zone 2 | | 2 | UNCDX | UDL56 | 27.58 | 385.26 | 72.08 | | | | | | | | |
| | | First 4-Wire 56Kbps Digital Grade Local Loop in Combination - Zone 3 | | 3 | UNCDX | UDL56 | 43.08 | 385.26 | 72.08 | | | | | | | | |
| | | First Interoffice Transport - Dedicated - DS1 combination - Per Mile Per Month | | | UNC1X | 1L5XX | 0.1938 | | | | | | | | | | |
| | | First Interoffice Transport - Dedicated - DS1 - combination Facility Termination Per Month | | | UNC1X | U1TF1 | 31.06 | 234.02 | 162.52 | | | | | | | | |
| | | Per each 1/0 Channel System in combination Per Month | | | UNC1X | MQ1 | 70.84 | 170.57 | 0.00 | | | | | | | | |
| | | Per each OCU-DP COCI (data) COCI per month (2.4-64kbs) | | | UNCDX | 1D1DD | 0.9199 | 54.14 | 17.51 | | | | | | | | |

| CATEGORY | | RATE ELEMENTS | Interim | Zone | BCS | USOC | RATES($) | | | | | Svc Order Submitted Elec per LSR | Svc Order Submitted Manually per LSR | Attachment: 2 Exh. A<br>Incremental Charge - Manual Svc Order vs. Electronic-1st | Incremental Charge - Manual Svc Order vs. Electronic-Add'l | Incremental Charge - Manual Svc Order vs. Electronic-Disc 1st | Incremental Charge - Manual Svc Order vs. Electronic-Disc Add'l |
|---|---|---|---|---|---|---|---|---|---|---|---|---|---|---|---|---|---|
| | | | | | | | Rec | Nonrecurring | | Nonrecurring Disconnect | | OSS Rates($) | | | | | |
| | | | | | | | | First | Add'l | First | Add'l | SOMEC | SOMAN | SOMAN | SOMAN | SOMAN | SOMAN |
| | | 3/1 Channel System in combination per month | | | UNC3X | MQ3 | 84.32 | 0.00 | 0.00 | | | | | | | | |
| | | Per each DS1 COCI in combination per month | | | UNC1X | UC1D1 | 8.43 | 54.14 | 17.51 | | | | | | | | |
| | | Additional 4-Wire 56Kbps Digital Grade Loop in same DS1 Interoffice Transport Combination - Zone 1 | | 1 | UNCDX | UDL56 | 21.98 | 385.26 | 72.08 | | | | | | | | |
| | | Additional 4-Wire 56Kbps Digital Grade Loop in same DS1 Interoffice Transport Combination - Zone 2 | | 2 | UNCDX | UDL56 | 27.58 | 385.26 | 72.08 | | | | | | | | |
| | | Additional 4-Wire 56Kbps Digital Grade Loop in same DS1 Interoffice Transport Combination - Zone 3 | | 3 | UNCDX | UDL56 | 43.08 | 385.26 | 72.08 | | | | | | | | |
| | | OCU-DP COCI (data) COCI in combination per month (2.4-64kbs) | | | UNCDX | 1D1DD | 0.9199 | 54.14 | 17.51 | | | | | | | | |
| | | Each Additional DS1 Interoffice Channel per mile in same 3/1 Channel System per month | | | UNC1X | 1L5XX | 0.1938 | | | | | | | | | | |
| | | Each Additional DS1 Interoffice Channel Facility Termination in same 3/1 Channel System per month | | | UNC1X | U1TF1 | 31.06 | 234.02 | 162.52 | | | | | | | | |
| | | Each Additional DS1 COCI in the same 3/1 channel system combination per month | | | UNC1X | UC1D1 | 8.43 | 54.14 | 17.51 | | | | | | | | |
| | **EXTENDED 4-WIRE 64 KBPS DIGITAL LOOP WITH DEDICATED DS1 INTEROFFICE TRANSPORT w/ 3/1 MUX** | | | | | | | | | | | | | | | | |
| | | First 4-Wire 64Kbps Digital Grade Loop in a DS1 Interoffice Transport Combination - Zone 1 | | 1 | UNCDX | UDL64 | 21.98 | 385.26 | 72.08 | | | | | | | | |
| | | First 4-Wire 64Kbps Digital Grade Loop in a DS1 Interoffice Transport Combination - Zone 2 | | 2 | UNCDX | UDL64 | 27.58 | 385.26 | 72.08 | | | | | | | | |
| | | First 4-Wire 64Kbps Digital Grade Loop in a DS1 Interoffice Transport Combination - Zone 3 | | 3 | UNCDX | UDL64 | 43.08 | 385.26 | 72.08 | | | | | | | | |
| | | First Interoffice Transport - Dedicated - DS1 combination - Per Mile Per Month | | | UNC1X | 1L5XX | 0.1938 | | | | | | | | | | |
| | | First Interoffice Transport - Dedicated - DS1 combination - Facility Termination Per Month | | | UNC1X | U1TF1 | 31.06 | 234.02 | 162.52 | | | | | | | | |
| | | Per each Channel System 1/0 in combination Per Month | | | UNC1X | MQ1 | 70.84 | 170.57 | 0.00 | | | | | | | | |
| | | Per each OCU-DP COCI (data) in combination - per month (2.4-64kbs) | | | UNCDX | 1D1DD | 0.9199 | 54.14 | 17.51 | | | | | | | | |
| | | 3/1 Channel System in combination per month | | | UNC3X | MQ3 | 84.32 | 0.00 | 0.00 | | | | | | | | |
| | | Per each DS1 COCI in combination per month | | | UNC1X | UC1D1 | 8.43 | 54.14 | 17.51 | | | | | | | | |
| | | Additional 4-Wire 64Kbps Digital Grade Loop in same DS1 Interoffice Transport Combination - Zone 1 | | 1 | UNCDX | UDL64 | 21.98 | 385.26 | 72.08 | | | | | | | | |
| | | Additional 4-Wire 64Kbps Digital Grade Loop in same DS1 Interoffice Transport Combination - Zone 2 | | 2 | UNCDX | UDL64 | 27.58 | 385.26 | 72.08 | | | | | | | | |
| | | Additional 4-Wire 64Kbps Digital Grade Loop in same DS1 Interoffice Transport Combination - Zone 3 | | 3 | UNCDX | UDL64 | 43.08 | 385.26 | 72.08 | | | | | | | | |
| | | Additional OCU-DP COCI (data) - DS1 to DS0 Channel System combination - per month (2.4-64kbs) | | | UNCDX | 1D1DD | 0.9199 | 54.14 | 17.51 | | | | | | | | |
| | | Each Additional DS1 Interoffice Channel per mile in same 3/1 Channel System per month | | | UNC1X | 1L5XX | 0.1938 | | | | | | | | | | |
| | | Each Additional DS1 Interoffice Channel Facility Termination in same 3/1 Channel System per month | | | UNC1X | U1TF1 | 31.06 | 234.02 | 162.52 | | | | | | | | |
| | | Each Additional DS1 COCI in the same 3/1 channel system combination per month | | | UNC1X | UC1D1 | 8.43 | 54.14 | 17.51 | | | | | | | | |
| | **EXTENDED 2-WIRE ISDN LOOP WITH DS1 INTEROFFICE TRANSPORT w/ 3/1 MUX** | | | | | | | | | | | | | | | | |
| | | First 2-Wire ISDN Loop in a DS1 Interoffice Combination Transport - Zone 1 | | 1 | UNCNX | U1L2X | 19.78 | 385.26 | 72.08 | | | | | | | | |
| | | First 2-Wire ISDN Loop in a DS1 Interoffice Combination Transport - Zone 2 | | 2 | UNCNX | U1L2X | 26.16 | 385.26 | 72.08 | | | | | | | | |
| | | First 2-Wire ISDN Loop in a DS1 Interoffice Combination Transport - Zone 3 | | 3 | UNCNX | U1L2X | 35.37 | 385.26 | 72.08 | | | | | | | | |
| | | First Interoffice Transport - Dedicated - DS1 combination - Per Mile per month | | | UNC1X | 1L5XX | 0.1938 | | | | | | | | | | |
| | | First Interoffice Transport - Dedicated - DS1 combination - Facility Termination per month | | | UNC1X | U1TF1 | 31.06 | 234.02 | 162.52 | | | | | | | | |
| | | Per each Channel System 1/0 in combination - per month | | | UNC1X | MQ1 | 70.84 | 170.57 | 0.00 | | | | | | | | |

| CATEGORY | RATE ELEMENTS | Interim | Zone | BCS | USOC | RATES($) | | | | | Svc Order Submitted Elec per LSR | Svc Order Submitted Manually per LSR | Incremental Charge - Manual Svc Order vs. Electronic-1st | Incremental Charge - Manual Svc Order vs. Electronic-Add'l | Incremental Charge - Manual Svc Order vs. Electronic-Disc 1st | Incremental Charge - Manual Svc Order vs. Electronic-Disc Add'l |
|---|---|---|---|---|---|---|---|---|---|---|---|---|---|---|---|---|
| | | | | | | Rec | Nonrecurring | | Nonrecurring Disconnect | | OSS Rates($) | | | | | |
| | | | | | | | First | Add'l | First | Add'l | SOMEC | SOMAN | SOMAN | SOMAN | SOMAN | SOMAN |
| | Per each 2-wire ISDN COCI (BRITE) in combination - per month | | | UNCNX | UC1CA | 1.53 | 54.14 | 17.51 | | | | | | | | |
| | 3/1 Channel System in combination per month | | | UNC3X | MQ3 | 84.32 | 0.00 | 0.00 | | | | | | | | |
| | Per each DS1 COCI in combination per month | | | UNC1X | UC1D1 | 8.43 | 54.14 | 17.51 | | | | | | | | |
| | Additional 2-wire ISDN Loop in same DS1Interoffice Transport Combination - Zone 1 | | 1 | UNCNX | U1L2X | 19.78 | 385.26 | 72.08 | | | | | | | | |
| | Additional 2-wire ISDN Loop in same DS1Interoffice Transport Combination - Zone 2 | | 2 | UNCNX | U1L2X | 26.16 | 385.26 | 72.08 | | | | | | | | |
| | Additional 2-wire ISDN Loop in same DS1Interoffice Transport Combination - Zone 3 | | 3 | UNCNX | U1L2X | 35.37 | 385.26 | 72.08 | | | | | | | | |
| | Additional 2-wire ISDN COCI (BRITE) in same 1/0 channel system combination- per month | | | UNCNX | UC1CA | 1.53 | 54.14 | 17.51 | | | | | | | | |
| | Each Additional DS1 Interoffice Channel per mile in same 3/1 Channel System per month | | | UNC1X | 1L5XX | 0.1938 | | | | | | | | | | |
| | Each Additional DS1 Interoffice Channel Facility Termination in same 3/1 Channel System per month | | | UNC1X | U1TF1 | 31.06 | 234.02 | 162.52 | | | | | | | | |
| | Each Additional DS1 COCI in the same 3/1 channel system combination per month | | | UNC1X | UC1D1 | 8.43 | 54.14 | 17.51 | | | | | | | | |
| | **EXTENDED 4-WIRE DS1 LOOP WITH DEDICATED DS1 INTEROFFICE TRANSPORT w/ 3/1 MUX** | | | | | | | | | | | | | | | |
| | First 4-wire DS1 Digital Lcoal Loop in Combination - Zone 1 | | 1 | UNC1X | USLXX | 63.62 | 412.03 | 139.55 | | | | | | | | |
| | First 4-wire DS1 Digital Lcoal Loop in Combination - Zone 2 | | 2 | UNC1X | USLXX | 104.40 | 412.03 | 139.55 | | | | | | | | |
| | First 4-wire DS1 Digital Lcoal Loop in Combination - Zone 3 | | 3 | UNC1X | USLXX | 210.22 | 412.03 | 139.55 | | | | | | | | |
| | First Interoffice Transport - Dedicated - DS1 combination - Per Mile Per Month | | | UNC1X | 1L5XX | 0.1938 | | | | | | | | | | |
| | First Interoffice Transport - Dedicated - DS1 combination - Facility Termination Per Month | | | UNC1X | U1TF1 | 31.06 | 234.02 | 162.52 | | | | | | | | |
| | 3/1 Channel System in combination per month | | | UNC3X | MQ3 | 84.32 | 0.00 | 0.00 | | | | | | | | |
| | Per each DS1 COCI combination per month | | | UNC1X | UC1D1 | 8.43 | 54.14 | 17.51 | | | | | | | | |
| | Each Additional DS1 Interoffice Channel per mile in same 3/1 Channel System per month | | | UNC1X | 1L5XX | 0.1938 | | | | | | | | | | |
| | Each Additional DS1 Interoffice Channel Facility Termination in same 3/1 Channel System per month | | | UNC1X | U1TF1 | 31.06 | 234.02 | 162.52 | | | | | | | | |
| | Each Additional DS1 COCI in the same 3/1 channel system combination per month | | | UNC1X | UC1D1 | 8.43 | 54.14 | 17.51 | | | | | | | | |
| | Additional 4-Wire DS1 Digital Local Loop in Combination - Zone 1 | | 1 | UNC1X | USLXX | 63.62 | 412.03 | 139.55 | | | | | | | | |
| | Additional 4-Wire DS1 Digital Local Loop in Combination - Zone 2 | | 2 | UNC1X | USLXX | 104.40 | 412.03 | 139.55 | | | | | | | | |
| | Additional 4-Wire DS1 Digital Local Loop in Combination - Zone 3 | | 3 | UNC1X | USLXX | 210.22 | 412.03 | 139.55 | | | | | | | | |
| | **EXTENDED 4-WIRE 56 KBPS DIGITAL EXTENDED LOOP WITH DS0 INTEROFFICE TRANSPORT** | | | | | | | | | | | | | | | |
| | First 4-wire 56 kbps Local Loop in combination - Zone 1 | | 1 | UNCDX | UDL56 | 21.98 | 385.26 | 72.08 | | | | | | | | |
| | First 4-wire 56 kbps Local Loop in combination - Zone 2 | | 2 | UNCDX | UDL56 | 27.58 | 385.26 | 72.08 | | | | | | | | |
| | First 4-wire 56 kbps Local Loop in combination - Zone 3 | | 3 | UNCDX | UDL56 | 43.08 | 385.26 | 72.08 | | | | | | | | |
| | First 4-wiree 56 kbps Interoffice Transport - Dedicated - Per Mile per month | | | UNCDX | 1L5XX | 0.0095 | | | | | | | | | | |
| | First 4-wire 56 kbps Interoffice Transport - Dedicated - Facility Termination per month | | | UNCDX | U1TD5 | 7.47 | 131.81 | 78.34 | | | | | | | | |
| | **EXTENDED 4-WIRE 64 KBPS DIGITAL EXTENDED LOOP WITH DS0 INTEROFFICE TRANSPORT** | | | | | | | | | | | | | | | |
| | First 4-wire 64 kbps Local Loop in combination - Zone 1 | | 1 | UNCDX | UDL64 | 21.98 | 385.26 | 72.08 | | | | | | | | |
| | First 4-wire 64 kbps Local Loop in combination - Zone 2 | | 2 | UNCDX | UDL64 | 27.58 | 385.26 | 72.08 | | | | | | | | |
| | First 4-wire 64 kbps Local Loop in combination - Zone 3 | | 3 | UNCDX | UDL64 | 43.08 | 385.26 | 72.08 | | | | | | | | |
| | First I4-wire 65 kbps Interoffice Transport - Dedicated - Per Mile per month | | | UNCDX | 1L5XX | 0.0095 | | | | | | | | | | |
| | First 4-wire 64 kbps Interoffice Transport - Dedicated - Facility Termination per month | | | UNCDX | U1TD6 | 7.47 | 131.81 | 78.34 | | | | | | | | |
| **ADDITIONAL NETWORK ELEMENTS** | | | | | | | | | | | | | | | | |
| | **When used as a part of a currently combined facility, the non-recurrng charges do not apply, but a Switch As Is charge does apply.** | | | | | | | | | | | | | | | |
| | **When used as ordinarily combined network elements in All States, the non-recurring charges apply and the Switch As Is Charge does not.** | | | | | | | | | | | | | | | |

## UNBUNDLED NETWORK ELEMENTS - North Carolina

Attachment: 2 Exh. A

| CATEGORY | RATE ELEMENTS | Interim | Zone | BCS | USOC | RATES($) Rec | Nonrecurring First | Nonrecurring Add'l | Nonrecurring Disconnect First | Nonrecurring Disconnect Add'l | Svc Order Submitted Elec per LSR | Svc Order Submitted Manually per LSR | Incremental Charge - Manual Svc Order vs. Electronic- 1st | Incremental Charge - Manual Svc Order vs. Electronic- Add'l | Incremental Charge - Manual Svc Order vs. Electronic- Disc 1st | Incremental Charge - Manual Svc Order vs. Electronic- Disc Add'l |
|---|---|---|---|---|---|---|---|---|---|---|---|---|---|---|---|---|
| | | | | | | | | | | | OSS Rates($) | | | | | |
| | | | | | | | First | Add'l | First | Add'l | SOMEC | SOMAN | SOMAN | SOMAN | SOMAN | SOMAN |
| **Nonrecurring Currently Combined Network Elements "Switch As Is" Charge** | | | | | | | | | | | | | | | | |
| | Wholesale to UNE, Switch-As-Is Conversion Charge | | | UNCVX, U1TVX, UNCDX, U1TDX, UNC1X, U1TD1,UNC3X, U1TD3, UNCSX, U1TS1, UDF, UDFCX | UNCCC | | 5.43 | 5.43 | | | | | | | | |
| **Optional Features & Functions:** | | | | | | | | | | | | | | | | |
| | Clear Channel Capability Extended Frame Option - per DS1 | I | | U1TD1, ULDD1,UNC1X | CCOEF | | 0.00 | 0.00 | 0.00 | 0.00 | | | | | | |
| | Clear Channel Capability Super FrameOption - per DS1 | I | | U1TD1, ULDD1,UNC1X | CCOSF | | 0.00 | 0.00 | 0.00 | 0.00 | | | | | | |
| | Clear Channel Capability (SF/ESF) Option - Subsequent Activity - per DS1 | I | | ULDD1, U1TD1, UNC1X, USL | NRCCC | | 184.76 | 23.80 | 1.99 | 0.78 | | | | | | |
| | C-bit Parity Option - Subsequent Activity - per DS3 | i | | U1TD3, ULDD3, UE3, UNC3X | NRCC3 | | 218.92 | 7.66 | 0.7576 | 0.00 | | | | | | |
| **MULTIPLEXER Interfaces** | | | | | | | | | | | | | | | | |
| | DS1 to DS0 Channel System per month | | | UNC1X | MQ1 | 70.84 | 170.57 | 0.00 | | | | | | | | |
| | OCU-DP COCI (data) - DS1 to DS0 Channel System - per month (2.4-64kbs) used for a Local Loop | | | UDL | 1D1DD | 0.9199 | 6.39 | 4.58 | | | | | | | | |
| | OCU-DP COCI (data) - DS1 to DS0 Channel System - per month (2.4-64kbs) used for connection to a channelized DS1 Local Channel in the same SWC as collocation | | | U1TUD | 1D1DD | 0.9199 | 6.39 | 4.58 | | | | | | | | |
| | 2-wire ISDN COCI (BRITE) - DS1 to DS0 Channel System - per month for a Local Loop | | | UDN | UC1CA | 1.53 | 6.39 | 4.58 | | | | | | | | |
| | 2-wire ISDN COCI (BRITE) - DS1 to DS0 Channel System - per month used for connection to a channelized DS1 Local Channel in the same SWC as collocation | | | U1TUB | UC1CA | 1.53 | 6.39 | 4.58 | | | | | | | | |
| | Voice Grade COCI - DS1 to DS0 Channel System - per month used for a Local Loop | | | UEA | 1D1VG | 0.4329 | 6.39 | 4.58 | | | | | | | | |
| | Voice Grade COCI - DS1 to DS0 Channel System - per month used for connection to a channelized DS1 Local Channel in the same SWC as collocation | | | U1TUC | 1D1VG | 0.4329 | 6.39 | 4.58 | | | | | | | | |
| | DS3 to DS1 Channel System per month | | | UNC3X | MQ3 | 84.32 | 0.00 | 0.00 | | | | | | | | |
| | STS-1 to DS1 Channel System per month | | | UNCSX | MQ3 | 84.32 | 0.00 | 0.00 | | | | | | | | |
| | DS1 COCI used with Loop per month | | | USL | UC1D1 | 8.43 | 6.39 | 4.58 | | | | | | | | |
| | DS1 COCI (used for connection to a channelized DS1 Local Channel in the same SWC as collocation) per month | | | U1TUA | UC1D1 | 8.43 | 6.39 | 4.58 | | | | | | | | |
| | DS1 COCI used with Interoffice Channel per month | | | U1TD1 | UC1D1 | 8.43 | 6.39 | 4.58 | | | | | | | | |
| | DS3 Interface Unit (DS1 COCI) used with Local Channel per month | | | ULDD1 | UC1D1 | 8.43 | 6.39 | 4.58 | | | | | | | | |
| **Access to DCS - Customer Reconfiguration (FlexServ)** | | | | | | | | | | | | | | | | |
| | Customer Reconfiguration Establishment | | | | | | 1.43 | 1.43 | | | | | | | | |
| | DS1 DSC Termination with DS0 Switching | | | | | 21.64 | 24.81 | 19.09 | | | | | | | | |
| | DS1 DSC Termination with DS1 Switching | | | | | 7.34 | 17.93 | 12.22 | | | | | | | | |
| | DS3 DSC Termination with DS1 Switching | | | | | 136.07 | 24.81 | 19.09 | | | | | | | | |
| **Service Rearrangements** | | | | | | | | | | | | | | | | |
| | NRC - Change in Facility Assignment per circuit Service Rearrangement | I | | U1TVX, U1TDX, UEA, UDL, U1TUC, U1TUD, U1TUB, ULDVX, ULDDX, UNCVX, UNCDX | URETD | | 269.90 | 47.10 | | | | | | | | |
| | NRC - Change in Facility Assignment per circuit Project Management (added to CFA per circuit if project managed) | I | | U1TVX, U1TDX, UEA, UDL, U1TUC, U1TUD, U1TUB, ULDVX, ULDDX, UNCVX, UNCDX | URETB | | 1.28 | 1.28 | | | | | | | | |
| **Miscellaneous** | | | | | | | | | | | | | | | | |

| UNBUNDLED NETWORK ELEMENTS - North Carolina | | | | | | | | | | | | | | Attachment: 2 Exh. A | | | |
|---|---|---|---|---|---|---|---|---|---|---|---|---|---|---|---|---|---|
| CATEGORY | | RATE ELEMENTS | Interim | Zone | BCS | USOC | RATES($) | | | | | Svc Order Submitted Elec per LSR | Svc Order Submitted Manually per LSR | Incremental Charge - Manual Svc Order vs. Electronic-1st | Incremental Charge - Manual Svc Order vs. Electronic-Add'l | Incremental Charge - Manual Svc Order vs. Electronic-Disc 1st | Incremental Charge - Manual Svc Order vs. Electronic-Disc Add'l |
| | | | | | | | Rec | Nonrecurring | | Nonrecurring Disconnect | | OSS Rates($) | | | | | |
| | | | | | | | | First | Add'l | First | Add'l | SOMEC | SOMAN | SOMAN | SOMAN | SOMAN | SOMAN |
| | | NRC - Order Coordination Specific Time - Dedicated Transport | I | | UNC1X | OCOSR | | 18.89 | 18.89 | | | | | | | | |

| UNBUNDLED NETWORK ELEMENTS - South Carolina | | | | | | | | | | | | | | Attachment: 2 Exh. A | | | |
|---|---|---|---|---|---|---|---|---|---|---|---|---|---|---|---|---|---|
| CATEGORY | RATE ELEMENTS | Interim | Zone | BCS | USOC | RATES($) | | | | | Svc Order Submitted Elec per LSR | Svc Order Submitted Manually per LSR | Incremental Charge - Manual Svc Order vs. Electronic-1st | Incremental Charge - Manual Svc Order vs. Electronic-Add'l | Incremental Charge - Manual Svc Order vs. Electronic-Disc 1st | Incremental Charge - Manual Svc Order vs. Electronic-Disc Add'l |
| | | | | | | Rec | Nonrecurring | | Nonrecurring Disconnect | | OSS Rates($) | | | | | |
| | | | | | | | First | Add'l | First | Add'l | SOMEC | SOMAN | SOMAN | SOMAN | SOMAN | SOMAN |
| | | | | | | | | | | | | | | | | |
| | **The "Zone" shown in the sections for stand-alone loops or loops as part of a combination refers to Geographically Deaveraged UNE Zones. To view Geographically Deaveraged UNE Zone Designations by Central Office, refer to internet Website: http://www.interconnection.bellsouth.com/become_a_clec/html/interconnection.htm** | | | | | | | | | | | | | | | |
| **OPERATIONS SUPPORT SYSTEMS (OSS) - "STATE SPECIFIC RATES"** | | | | | | | | | | | | | | | | |
| | NOTE: (1) CLEC should contact its contract negotiator if it prefers the "regional" OSS charges as offered by BellSouth. The OSS charges currently contained in this rate exhibit are the PSC state ordered "state specificl" service ordering charges. CLEC may elect either the state specific Commission ordered rates for the service ordering charges, or CLEC may elect the regional service ordering charge, however, CLEC can not obtain a mixture of the two regardless if CLEC has a interconnection contract established in each of the 9 states. | | | | | | | | | | | | | | | |
| | NOTE: (2) Any element that can be ordered electronically will be billed according to the SOMEC rate listed in this category. Please refer to BellSouth's Local Ordering Handbook (LOH) to determine if a product can be ordered electronically. For those elements that cannot be ordered electronically at present per the LOH, the listed SOMEC rate in this category reflects the charge that would be billed to a CLEC once electronic ordering capabilities come on-line for that element. Otherwise, the manual ordering charge, SOMAN, will be applied to a CLECs bill when it submits an LSR to BellSouth. | | | | | | | | | | | | | | | |
| | OSS - Electronic Service Order Charge, Per Local Service Request (LSR) - UNE Only | | | | SOMEC | | 5.92 | 0.00 | 3.80 | 0.00 | | | | | | |
| | OSS - Manual Service Order Charge, Per Local Service Request (LSR) - UNE Only | | | | SOMAN | | 15.69 | 0.00 | 1.97 | 0.00 | | | | | | |
| **UNE SERVICE DATE ADVANCEMENT CHARGE** | | | | | | | | | | | | | | | | |
| | **NOTE: The Expedite charge will be maintained commensurate with BellSouth's FCC No.1 Tariff, Section 5 as applicable.** | | | | | | | | | | | | | | | |
| | UNE Expedite Charge per Circuit or Line Assignable USOC, per Day | | | UAL, UEANL, UCL, UEF, UDF, UEQ, UDL, UENTW, UDN, UEA, UHL, ULC, USL, U1T12, U1T48, U1TD1, U1TD3, U1TDX, U1TO3, U1TS1, U1TVX, UC1BC, UC1BL, UC1CC, UC1CL, UC1DC, UC1DL, UC1EC, UC1EL, UC1FC, UC1FL, UC1GC, UC1GL, UC1HC, UC1HL, UDL12, UDL48, UDLO3, UDLSX, UE3, ULD12, ULD48, ULDD1, ULDD3, ULDDX, ULDO3, ULDS1, ULDVX, UNC1X, UNC3X, UNCDX, UNCNX, UNCSX, UNCVX, UNLD1, UNLD3, UXTD1, UXTD3, UXTS1, U1TUC, U1TUD, U1TUB, U1TUA,NTCVG, NTCUD, NTCD1 | SDASP | | 200.00 | 200.00 | | | | | | | | |
| **ORDER MODIFICATION CHARGE** | | | | | | | | | | | | | | | | |
| | Order Modification Charge (OMC) | | | | | | 26.21 | 0.00 | 0.00 | 0.00 | | | | | | |
| | Order Modification Additional Dispatch Charge (OMCAD) | | | | | | 150.00 | 0.00 | 0.00 | 0.00 | | | | | | |
| **UNBUNDLED EXCHANGE ACCESS LOOP** | | | | | | | | | | | | | | | | |
| | **2-WIRE ANALOG VOICE GRADE LOOP** | | | | | | | | | | | | | | | |
| | 2-Wire Analog Voice Grade Loop - Service Level 1- Zone 1 | | 1 | UEANL | UEAL2 | 14.94 | 37.92 | 17.62 | 23.56 | 5.32 | | | | | | |
| | 2-Wire Analog Voice Grade Loop - Service Level 1- Zone 2 | | 2 | UEANL | UEAL2 | 21.39 | 37.92 | 17.62 | 23.56 | 5.32 | | | | | | |
| | 2-Wire Analog Voice Grade Loop - Service Level 1- Zone 3 | | 3 | UEANL | UEAL2 | 26.72 | 37.92 | 17.62 | 23.56 | 5.32 | | | | | | |
| | 2-Wire Analog Voice Grade Loop - Service Level 1- Zone 1 | | 1 | UEANL | UEASL | 14.94 | 37.92 | 17.62 | 23.56 | 5.32 | | | | | | |
| | 2-Wire Analog Voice Grade Loop - Service Level 1- Zone 2 | | 2 | UEANL | UEASL | 21.39 | 37.92 | 17.62 | 23.56 | 5.32 | | | | | | |
| | 2-Wire Analog Voice Grade Loop - Service Level 1- Zone 3 | | 3 | UEANL | UEASL | 26.72 | 37.92 | 17.62 | 23.56 | 5.32 | | | | | | |
| | Unbundled Miscellaneous Rate Element, Tag Loop at End User Premise | | | UEANL | URETL | | 8.95 | 0.88 | | | | | | | | |

| UNBUNDLED NETWORK ELEMENTS - South Carolina | | | | | | | | | | | | | | Attachment: 2 Exh. A | | | |
|---|---|---|---|---|---|---|---|---|---|---|---|---|---|---|---|---|---|
| CATEGORY | RATE ELEMENTS | Interim | Zone | BCS | USOC | RATES($) | | | | | Svc Order Submitted Elec per LSR | Svc Order Submitted Manually per LSR | Incremental Charge - Manual Svc Order vs. Electronic-1st | Incremental Charge - Manual Svc Order vs. Electronic-Add'l | Incremental Charge - Manual Svc Order vs. Electronic-Disc 1st | Incremental Charge - Manual Svc Order vs. Electronic-Disc Add'l |
| | | | | | | Rec | Nonrecurring | | Nonrecurring Disconnect | | OSS Rates($) | | | | | |
| | | | | | | | First | Add'l | First | Add'l | SOMEC | SOMAN | SOMAN | SOMAN | SOMAN | SOMAN |
| | Loop Testing - Basic 1st Half Hour | | | UEANL | URET1 | | 34.23 | 0.00 | | | | | | | | |
| | Loop Testing - Basic Additional Half Hour | | | UEANL | URETA | | 19.90 | 19.90 | | | | | | | | |
| | CLEC to CLEC Conversion Charge Without Outside Dispatch (UVL-SL1) | | | UEANL | UREWO | | 15.81 | 8.96 | | | | | | | | |
| | Unbundled Voice Loop, Non-Design Voice Loop, billing for BST providing make-up (Engineering Information - E.I. ) | | | UEANL | UEANM | | 13.47 | 13.47 | | | | | | | | |
| | Manual Order Coordination for UVL-SL1s (per loop) | | | UEANL | UEAMC | | 8.17 | 8.17 | | | | | | | | |
| **2-WIRE Unbundled COPPER LOOP** | | | | | | | | | | | | | | | | |
| | 2-Wire Unbundled Copper Loop - Non-Designed Zone 1 | | 1 | UEQ | UEQ2X | 12.94 | 36.40 | 16.10 | 22.66 | 4.42 | | | | | | |
| | 2 Wire Unbundled Copper Loop - Non-Designed - Zone 2 | | 2 | UEQ | UEQ2X | 14.51 | 36.40 | 16.10 | 22.66 | 4.42 | | | | | | |
| | 2 Wire Unbundled Copper Loop - Non-Designed - Zone 3 | | 3 | UEQ | UEQ2X | 15.02 | 36.40 | 16.10 | 22.66 | 4.42 | | | | | | |
| | Unbundled Miscellaneous Rate Element, Tag Loop at End User Premise | | | UEQ | URETL | | 8.95 | 0.88 | | | | | | | | |
| | Manual Order Coordination 2 Wire Unbundled Copper Loop - Non-Designed (per loop) | | | UEQ | USBMC | | 8.17 | 8.17 | | | | | | | | |
| | Unbundled Copper Loop, Non-Design Copper Loop, billing for BST providing make-up (Engineering Information - E.I.) | | | UEQ | UEQMU | | 13.47 | 13.47 | | | | | | | | |
| | Loop Testing - Basic 1st Half Hour | | | UEQ | URET1 | | 34.23 | 0.00 | | | | | | | | |
| | Loop Testing - Basic Additional Half Hour | | | UEQ | URETA | | 19.90 | 19.90 | | | | | | | | |
| | CLEC to CLEC Conversion Charge Without Outside Dispatch (UCL-ND) | | | UEQ | UREWO | | 14.30 | 7.45 | | | | | | | | |
| **UNBUNDLED EXCHANGE ACCESS LOOP** | | | | | | | | | | | | | | | | |
| **2-WIRE ANALOG VOICE GRADE LOOP** | | | | | | | | | | | | | | | | |
| | 2-Wire Analog Voice Grade Loop - Service Level 2 w/Loop or Ground Start Signaling - Zone 1 | | 1 | UEA, NTCVG | UEAL2 | 16.68 | 105.98 | 68.43 | 53.05 | 10.61 | | | | | | |
| | 2-Wire Analog Voice Grade Loop - Service Level 2 w/Loop or Ground Start Signaling - Zone 2 | | 2 | UEA, NTCVG | UEAL2 | 23.13 | 105.98 | 68.43 | 53.05 | 10.61 | | | | | | |
| | 2-Wire Analog Voice Grade Loop - Service Level 2 w/Loop or Ground Start Signaling - Zone 3 | | 3 | UEA, NTCVG | UEAL2 | 28.46 | 105.98 | 68.43 | 53.05 | 10.61 | | | | | | |
| | 2-Wire Analog Voice Grade Loop - Service Level 2 w/Reverse Battery Signaling - Zone 1 | | 1 | UEA, NTCVG | UEAR2 | 16.68 | 105.98 | 68.43 | 53.05 | 10.61 | | | | | | |
| | 2-Wire Analog Voice Grade Loop - Service Level 2 w/Reverse Battery Signaling - Zone 2 | | 2 | UEA, NTCVG | UEAR2 | 23.13 | 105.98 | 68.43 | 53.05 | 10.61 | | | | | | |
| | 2-Wire Analog Voice Grade Loop - Service Level 2 w/Reverse Battery Signaling - Zone 3 | | 3 | UEA, NTCVG | UEAR2 | 28.46 | 105.98 | 68.43 | 53.05 | 10.61 | | | | | | |
| | Switch-As-Is Conversion rate per UNE Loop, Single LSR, (per DS0) | | | UEA, NTCVG | URESL | | 21.91 | 3.15 | | | | | | | | |
| | Switch-As-Is Conversion rate per UNE Loop, Spreadsheet, (per DS0) | | | UEA, NTCVG | URESP | | 23.32 | 4.56 | | | | | | | | |
| | CLEC to CLEC Conversion Charge without outside dispatch | | | UEA, NTCVG | UREWO | | 87.90 | 36.44 | | | | | | | | |
| | Loop Tagging - Service Level 2 (SL2) | | | UEA, NTCVG | URETL | | 11.24 | 1.10 | | | | | | | | |
| **4-WIRE ANALOG VOICE GRADE LOOP** | | | | | | | | | | | | | | | | |
| | 4-Wire Analog Voice Grade Loop - Zone 1 | | 1 | UEA, NTCVG | UEAL4 | 32.59 | 132.38 | 94.83 | 59.35 | 14.61 | | | | | | |
| | 4-Wire Analog Voice Grade Loop - Zone 2 | | 2 | UEA, NTCVG | UEAL4 | 43.89 | 132.38 | 94.83 | 59.35 | 14.61 | | | | | | |
| | 4-Wire Analog Voice Grade Loop - Zone 3 | | 3 | UEA, NTCVG | UEAL4 | 43.38 | 132.38 | 94.83 | 59.35 | 14.61 | | | | | | |
| | Switch-As-Is Conversion rate per UNE Loop, Single LSR, (per DS0) | | | UEA, NTCVG | URESL | | 21.91 | 3.15 | | | | | | | | |
| | Switch-As-Is Conversion rate per UNE Loop, Spreadsheet, (per DS0) | | | UEA, NTCVG | URESP | | 23.32 | 4.56 | | | | | | | | |
| | CLEC to CLEC Conversion Charge without outside dispatch | | | UEA, NTCVG | UREWO | | 87.90 | 36.44 | | | | | | | | |
| **2-WIRE ISDN DIGITAL GRADE LOOP** | | | | | | | | | | | | | | | | |
| | 2-Wire ISDN Digital Grade Loop - Zone 1 | | 1 | UDN | U1L2X | 25.21 | 117.58 | 80.03 | 53.05 | 10.61 | | | | | | |
| | 2-Wire ISDN Digital Grade Loop - Zone 2 | | 2 | UDN | U1L2X | 32.76 | 117.58 | 80.03 | 53.05 | 10.61 | | | | | | |
| | 2-Wire ISDN Digital Grade Loop - Zone 3 | | 3 | UDN | U1L2X | 37.70 | 117.58 | 80.03 | 53.05 | 10.61 | | | | | | |
| | CLEC to CLEC Conversion Charge without outside dispatch | | | UDN | UREWO | | 91.82 | 44.25 | | | | | | | | |
| **2-WIRE ASYMMETRICAL DIGITAL SUBSCRIBER LINE (ADSL) COMPATIBLE LOOP** | | | | | | | | | | | | | | | | |
| | 2 Wire Unbundled ADSL Loop including manual service inquiry & facility reservation - Zone 1 | | 1 | UAL | UAL2X | 12.19 | 120.84 | 70.56 | 50.37 | 7.93 | | | | | | |

| CATEGORY | RATE ELEMENTS | Interim | Zone | BCS | USOC | RATES($) | | | | | Svc Order Submitted Elec per LSR | Svc Order Submitted Manually per LSR | Incremental Charge - Manual Svc Order vs. Electronic-1st | Incremental Charge - Manual Svc Order vs. Electronic-Add'l | Incremental Charge - Manual Svc Order vs. Electronic-Disc 1st | Incremental Charge - Manual Svc Order vs. Electronic-Disc Add'l |
|---|---|---|---|---|---|---|---|---|---|---|---|---|---|---|---|---|
| | | | | | | Rec | Nonrecurring | | Nonrecurring Disconnect | | OSS Rates($) | | | | | |
| | | | | | | | First | Add'l | First | Add'l | SOMEC | SOMAN | SOMAN | SOMAN | SOMAN | SOMAN |
| | 2 Wire Unbundled ADSL Loop including manual service inquiry & facility reservation - Zone 2 | | 2 | UAL | UAL2X | 13.71 | 120.84 | 70.56 | 50.37 | 7.93 | | | | | | |
| | 2 Wire Unbundled ADSL Loop including manual service inquiry & facility reservation - Zone 3 | | 3 | UAL | UAL2X | 14.14 | 120.84 | 70.56 | 50.37 | 7.93 | | | | | | |
| | 2 Wire Unbundled ADSL Loop without manual service inquiry & facility reservaton - Zone 1 | | 1 | UAL | UAL2W | 12.19 | 95.81 | 57.82 | 50.37 | 7.93 | | | | | | |
| | 2 Wire Unbundled ADSL Loop without manual service inquiry & facility reservaton - Zone 2 | | 2 | UAL | UAL2W | 13.71 | 95.81 | 57.82 | 50.37 | 7.93 | | | | | | |
| | 2 Wire Unbundled ADSL Loop without manual service inquiry & facility reservaton - Zone 3 | | 3 | UAL | UAL2W | 14.14 | 95.81 | 57.82 | 50.37 | 7.93 | | | | | | |
| | CLEC to CLEC Conversion Charge without outside dispatch | | | UAL | UREWO | | 86.38 | 40.48 | | | | | | | | |
| **2-WIRE HIGH BIT RATE DIGITAL SUBSCRIBER LINE (HDSL) COMPATIBLE LOOP** | | | | | | | | | | | | | | | | |
| | 2 Wire Unbundled HDSL Loop including manual service inquiry & facility reservation - Zone 1 | | 1 | UHL | UHL2X | 9.58 | 129.52 | 79.24 | 50.37 | 7.93 | | | | | | |
| | 2 Wire Unbundled HDSL Loop including manual service inquiry & facility reservation - Zone 2 | | 2 | UHL | UHL2X | 10.92 | 129.52 | 79.24 | 50.37 | 7.93 | | | | | | |
| | 2 Wire Unbundled HDSL Loop including manual service inquiry & facility reservation - Zone 3 | | 3 | UHL | UHL2X | 11.40 | 129.52 | 79.24 | 50.37 | 7.93 | | | | | | |
| | 2 Wire Unbundled HDSL Loop without manual service inquiry and facility reservation - Zone 1 | | 1 | UHL | UHL2W | 9.58 | 104.49 | 66.50 | 50.37 | 7.93 | | | | | | |
| | 2 Wire Unbundled HDSL Loop without manual service inquiry and facility reservation - Zone 2 | | 2 | UHL | UHL2W | 10.92 | 104.49 | 66.50 | 50.37 | 7.93 | | | | | | |
| | 2 Wire Unbundled HDSL Loop without manual service inquiry and facility reservation - Zone 3 | | 3 | UHL | UHL2W | 11.40 | 104.49 | 66.50 | 50.37 | 7.93 | | | | | | |
| | CLEC to CLEC Conversion Charge without outside dispatch | | | UHL | UREWO | | 86.32 | 40.48 | | | | | | | | |
| **4-WIRE HIGH BIT RATE DIGITAL SUBSCRIBER LINE (HDSL) COMPATIBLE LOOP** | | | | | | | | | | | | | | | | |
| | 4 Wire Unbundled HDSL Loop including manual service inquiry and facility reservation - Zone 1 | | 1 | UHL | UHL4X | 16.02 | 158.18 | 107.89 | 55.12 | 10.38 | | | | | | |
| | 4-Wire Unbundled HDSL Loop including manual service inquiry and facility reservation - Zone 2 | | 2 | UHL | UHL4X | 14.33 | 158.18 | 107.89 | 55.12 | 10.38 | | | | | | |
| | 4-Wire Unbundled HDSL Loop including manual service inquiry and facility reservation - Zone 3 | | 3 | UHL | UHL4X | 16.84 | 158.18 | 107.89 | 55.12 | 10.38 | | | | | | |
| | 4-Wire Unbundled HDSL Loop without manual service inquiry and facility reservation - Zone 1 | | 1 | UHL | UHL4W | 16.02 | 133.14 | 95.16 | 55.12 | 10.38 | | | | | | |
| | 4-Wire Unbundled HDSL Loop without manual service inquiry and facility reservation - Zone 2 | | 2 | UHL | UHL4W | 14.33 | 133.14 | 95.16 | 55.12 | 10.38 | | | | | | |
| | 4-Wire Unbundled HDSL Loop without manual service inquiry and facility reservation - Zone 3 | | 3 | UHL | UHL4W | 16.84 | 133.14 | 95.16 | 55.12 | 10.38 | | | | | | |
| | CLEC to CLEC Conversion Charge without outside dispatch | | | UHL | UREWO | | 86.32 | 40.48 | | | | | | | | |
| **4-WIRE DS1 DIGITAL LOOP** | | | | | | | | | | | | | | | | |
| | 4-Wire DS1 Digital Loop - Zone 1 | | 1 | USL, NTCD1 | USLXX | 79.51 | 253.03 | 157.89 | 44.80 | 11.73 | | | | | | |
| | 4-Wire DS1 Digital Loop - Zone 2 | | 2 | USL, NTCD1 | USLXX | 136.00 | 253.03 | 157.89 | 44.80 | 11.73 | | | | | | |
| | 4-Wire DS1 Digital Loop - Zone 3 | | 3 | USL, NTCD1 | USLXX | 229.15 | 253.03 | 157.89 | 44.80 | 11.73 | | | | | | |
| | Switch-As-Is Conversion rate per UNE Loop, Single LSR, (per DS1) | | | USL, NTCD1 | URESL | | 21.91 | 3.15 | | | | | | | | |
| | Switch-As-Is Conversion rate per UNE Loop, Spreadsheet, (per DS1) | | | USL, NTCD1 | URESP | | 23.32 | 4.56 | | | | | | | | |
| | CLEC to CLEC Conversion Charge without outside dispatch | | | USL | UREWO | | 101.30 | 43.13 | | | | | | | | |
| **4-WIRE 19.2, 56 OR 64 KBPS DIGITAL GRADE LOOP** | | | | | | | | | | | | | | | | |
| | 4 Wire Unbundled Digital 19.2 Kbps | | 1 | UDL, NTCUD | UDL19 | 29.93 | 126.66 | 89.12 | 59.35 | 14.61 | | | | | | |
| | 4 Wire Unbundled Digital 19.2 Kbps | | 2 | UDL, NTCUD | UDL19 | 33.99 | 126.66 | 89.12 | 59.35 | 14.61 | | | | | | |
| | 4 Wire Unbundled Digital 19.2 Kbps | | 3 | UDL, NTCUD | UDL19 | 34.74 | 126.66 | 89.12 | 59.35 | 14.61 | | | | | | |
| | 4 Wire Unbundled Digital Loop 56 Kbps - Zone 1 | | 1 | UDL, NTCUD | UDL56 | 29.93 | 126.66 | 89.12 | 59.35 | 14.61 | | | | | | |
| | 4 Wire Unbundled Digital Loop 56 Kbps - Zone 2 | | 2 | UDL, NTCUD | UDL56 | 33.99 | 126.66 | 89.12 | 59.35 | 14.61 | | | | | | |
| | 4 Wire Unbundled Digital Loop 56 Kbps - Zone 3 | | 3 | UDL, NTCUD | UDL56 | 34.74 | 126.66 | 89.12 | 59.35 | 14.61 | | | | | | |
| | 4 Wire Unbundled Digital Loop 64 Kbps - Zone 1 | | 1 | UDL, NTCUD | UDL64 | 29.93 | 126.66 | 89.12 | 59.35 | 14.61 | | | | | | |
| | 4 Wire Unbundled Digital Loop 64 Kbps - Zone 2 | | 2 | UDL, NTCUD | UDL64 | 33.99 | 126.66 | 89.12 | 59.35 | 14.61 | | | | | | |
| | 4 Wire Unbundled Digital Loop 64 Kbps - Zone 3 | | 3 | UDL, NTCUD | UDL64 | 34.74 | 126.66 | 89.12 | 59.35 | 14.61 | | | | | | |

| UNBUNDLED NETWORK ELEMENTS - South Carolina | | | | | | | | | | | | | | Attachment: 2 Exh. A | | | |
|---|---|---|---|---|---|---|---|---|---|---|---|---|---|---|---|---|---|
| CATEGORY | | RATE ELEMENTS | Interim | Zone | BCS | USOC | RATES($) | | | | | Svc Order Submitted Elec per LSR | Svc Order Submitted Manually per LSR | Incremental Charge - Manual Svc Order vs. Electronic-1st | Incremental Charge - Manual Svc Order vs. Electronic-Add'l | Incremental Charge - Manual Svc Order vs. Electronic-Disc 1st | Incremental Charge - Manual Svc Order vs. Electronic-Disc Add'l |
| | | | | | | | Rec | Nonrecurring | | Nonrecurring Disconnect | | OSS Rates($) | | | | | |
| | | | | | | | | First | Add'l | First | Add'l | SOMEC | SOMAN | SOMAN | SOMAN | SOMAN | SOMAN |
| | | Switch-As-Is Conversion rate per UNE Loop, Single LSR, (per DS0) | | | UDL, NTCUD | URESL | | 21.91 | 3.15 | | | | | | | | |
| | | Switch-As-Is Conversion rate per UNE Loop, Spreadsheet, (per DS0) | | | UDL, NTCUD | URESP | | 23.32 | 4.56 | | | | | | | | |
| | | CLEC to CLEC Conversion Charge without outside dispatch | | | UDL, NTCUD | UREWO | | 102.34 | 49.85 | | | | | | | | |
| | **2-WIRE Unbundled COPPER LOOP** | | | | | | | | | | | | | | | | |
| | | 2-Wire Unbundled Copper Loop-Designed including manual service inquiry & facility reservation - Zone 1 | | 1 | UCL | UCLPB | 12.19 | 119.91 | 69.62 | 50.37 | 7.93 | | | | | | |
| | | 2-Wire Unbundled Copper Loop-Designed including manual service inquiry & facility reservation - Zone 2 | | 2 | UCL | UCLPB | 13.71 | 119.91 | 69.62 | 50.37 | 7.93 | | | | | | |
| | | 2 Wire Unbundled Copper Loop-Designed including manual service inquiry & facility reservation - Zone 3 | | 3 | UCL | UCLPB | 14.14 | 119.91 | 69.62 | 50.37 | 7.93 | | | | | | |
| | | 2-Wire Unbundled Copper Loop-Designed without manual service inquiry and facility reservation - Zone 1 | | 1 | UCL | UCLPW | 12.19 | 94.87 | 56.89 | 50.37 | 7.93 | | | | | | |
| | | 2-Wire Unbundled Copper Loop-Designed without manual service inquiry and facility reservation - Zone 2 | | 2 | UCL | UCLPW | 13.71 | 94.87 | 56.89 | 50.37 | 7.93 | | | | | | |
| | | 2-Wire Unbundled Copper Loop-Designed without manual service inquiry and facility reservation - Zone 3 | | 3 | UCL | UCLPW | 14.14 | 94.87 | 56.89 | 50.37 | 7.93 | | | | | | |
| | | CLEC to CLEC Conversion Charge without outside dispatch (UCL-Des) | | | UCL | UREWO | | 94.87 | 42.57 | | | | | | | | |
| | **4-WIRE COPPER LOOP** | | | | | | | | | | | | | | | | |
| | | 4-Wire Copper Loop-Designed including manual service inquiry and facility reservation - Zone 1 | | 1 | UCL | UCL4S | 19.64 | 144.17 | 93.88 | 55.12 | 10.38 | | | | | | |
| | | 4-Wire Copper Loop-Designed including manual service inquiry and facility reservation - Zone 2 | | 2 | UCL | UCL4S | 20.90 | 144.17 | 93.88 | 55.12 | 10.38 | | | | | | |
| | | 4-Wire Copper Loop-Designed including manual service inquiry and facility reservation - Zone 3 | | 3 | UCL | UCL4S | 19.34 | 144.17 | 93.88 | 55.12 | 10.38 | | | | | | |
| | | 4-Wire Copper Loop-Designed without manual service inquiry and facility reservation - Zone 1 | | 1 | UCL | UCL4W | 19.64 | 119.13 | 81.15 | 55.12 | 10.38 | | | | | | |
| | | 4-Wire Copper Loop-Designed without manual service inquiry and facility reservation - Zone 2 | | 2 | UCL | UCL4W | 20.90 | 119.13 | 81.15 | 55.12 | 10.38 | | | | | | |
| | | 4-Wire Copper Loop-Designed without manual service inquiry and facility reservation - Zone 3 | | 3 | UCL | UCL4W | 19.34 | 119.13 | 81.15 | 55.12 | 10.38 | | | | | | |
| | | CLEC to CLEC Conversion Charge without outside dispatch (UCL-Des) | | | UCL | UREWO | | 94.87 | 42.57 | | | | | | | | |
| | | Order Coordination for Unbundled Copper Loops (per loop) | | | UCL | UCLMC | | 8.17 | 8.17 | | | | | | | | |
| | | Order Coordination for Specified Conversion Time (per LSR) | | | UEA, UDN, UAL, UHL, UDL, NTCVG, NTCUD, USL, NTCD1, UEANL | OCOSL | | 18.13 | | | | | | | | | |
| **LOOP MODIFICATION** | | | | | | | | | | | | | | | | | |
| | | Unbundled Loop Modification, Removal of Load Coils - 2 Wire pair less than or equal to 18k ft, per Unbundled Loop | | | UAL, UHL, UCL, UEQ, ULS, UEA, UEANL, UEPSR, UEPSB | ULM2L | | 32.46 | 32.46 | | | | | | | | |
| | | Unbundled Loop Modification Removal of Load Coils - 4 Wire less than or equal to 18K ft, per Unbundled Loop | | | UHL, UCL, UEA | ULM4L | | 32.46 | 32.46 | | | | | | | | |
| | | Unbundled Loop Modification Removal of Bridged Tap Removal, per unbundled loop | | | UAL, UHL, UCL, UEQ, ULS, UEA, UEANL, UEPSR, UEPSB | ULMBT | | 32.48 | 32.48 | | | | | | | | |
| **SUB-LOOPS** | | | | | | | | | | | | | | | | | |
| | **Sub-Loop Distribution** | | | | | | | | | | | | | | | | |
| | | Sub-Loop - Per Cross Box Location - CLEC Feeder Facility Set-Up | | | UEANL, UEF | USBSA | | 241.42 | 241.42 | | | | | | | | |
| | | Sub-Loop - Per Cross Box Location - Per 25 Pair Panel Set-Up | | | UEANL, UEF | USBSB | | 22.69 | 22.69 | | | | | | | | |
| | | Sub-Loop - Per Building Equipment Room - CLEC Feeder Facility Set-Up | | | UEANL | USBSC | | 177.84 | 177.84 | | | | | | | | |

| UNBUNDLED NETWORK ELEMENTS - South Carolina | | | | | | | | | | | | | Attachment: 2 Exh. A | | | |
|---|---|---|---|---|---|---|---|---|---|---|---|---|---|---|---|---|
| CATEGORY | RATE ELEMENTS | Interim | Zone | BCS | USOC | RATES($) | | | | | Svc Order Submitted Elec per LSR | Svc Order Submitted Manually per LSR | Incremental Charge - Manual Svc Order vs. Electronic-1st | Incremental Charge - Manual Svc Order vs. Electronic-Add'l | Incremental Charge - Manual Svc Order vs. Electronic-Disc 1st | Incremental Charge - Manual Svc Order vs. Electronic-Disc Add'l |
| | | | | | | Rec | Nonrecurring | | Nonrecurring Disconnect | | OSS Rates($) | | | | | |
| | | | | | | | First | Add'l | First | Add'l | SOMEC | SOMAN | SOMAN | SOMAN | SOMAN | SOMAN |
| | Sub-Loop - Per Building Equipment Room - Per 25 Pair Panel Set-Up | | | UEANL | USBSD | | 55.58 | 55.58 | | | | | | | | |
| | Sub-Loop Distribution Per 2-Wire Analog Voice Grade Loop - Zone 1 | | 1 | UEANL | USBN2 | 8.87 | 65.94 | 31.03 | 45.35 | 6.71 | | | | | | |
| | Sub-Loop Distribution Per 2-Wire Analog Voice Grade Loop - Zone 2 | | 2 | UEANL | USBN2 | 12.58 | 65.94 | 31.03 | 45.35 | 6.71 | | | | | | |
| | Sub-Loop Distribution Per 2-Wire Analog Voice Grade Loop - Zone 3 | | 3 | UEANL | USBN2 | 14.79 | 65.94 | 31.03 | 45.35 | 6.71 | | | | | | |
| | Order Coordination for Unbundled Sub-Loops, per sub-loop pair | | | UEANL | USBMC | | 8.17 | 8.17 | | | | | | | | |
| | Sub-Loop Distribution Per 4-Wire Analog Voice Grade Loop - Zone 1 | | 1 | UEANL | USBN4 | 14.11 | 79.21 | 44.29 | 49.82 | 9.09 | | | | | | |
| | Sub-Loop Distribution Per 4-Wire Analog Voice Grade Loop - Zone 2 | | 2 | UEANL | USBN4 | 19.40 | 79.21 | 44.29 | 49.82 | 9.09 | | | | | | |
| | Sub-Loop Distribution Per 4-Wire Analog Voice Grade Loop - Zone 3 | | 3 | UEANL | USBN4 | 18.90 | 79.21 | 44.29 | 49.82 | 9.09 | | | | | | |
| | Order Coordination for Unbundled Sub-Loops, per sub-loop pair | | | UEANL | USBMC | | 8.17 | 8.17 | | | | | | | | |
| | Sub-Loop 2-Wire Intrabuilding Network Cable (INC) | | | UEANL | USBR2 | 2.41 | 53.13 | 18.21 | 45.35 | 6.71 | | | | | | |
| | Order Coordination for Unbundled Sub-Loops, per sub-loop pair | | | UEANL | USBMC | | 8.17 | 8.17 | | | | | | | | |
| | Sub-Loop 4-Wire Intrabuilding Network Cable (INC) | | | UEANL | USBR4 | 5.36 | 59.38 | 24.47 | 49.82 | 9.09 | | | | | | |
| | Order Coordination for Unbundled Sub-Loops, per sub-loop pair | | | UEANL | USBMC | | 8.17 | 8.17 | | | | | | | | |
| | Loop Testing - Basic 1st Half Hour | | | UEANL | URET1 | | 34.23 | 0.00 | | | | | | | | |
| | Loop Testing - Basic Additional Half Hour | | | UEANL | URETA | | 19.90 | 19.90 | | | | | | | | |
| | 2 Wire Copper Unbundled Sub-Loop Distribution - Zone 1 | | 1 | UEF | UCS2X | 7.11 | 65.94 | 31.03 | 45.35 | 6.71 | | | | | | |
| | 2 Wire Copper Unbundled Sub-Loop Distribution - Zone 2 | | 2 | UEF | UCS2X | 9.83 | 65.94 | 31.03 | 45.35 | 6.71 | | | | | | |
| | 2 Wire Copper Unbundled Sub-Loop Distribution - Zone 3 | | 3 | UEF | UCS2X | 10.48 | 65.94 | 31.03 | 45.35 | 6.71 | | | | | | |
| | Order Coordination for Unbundled Sub-Loops, per sub-loop pair | | | UEF | USBMC | | 8.17 | 8.17 | | | | | | | | |
| | 4 Wire Copper Unbundled Sub-Loop Distribution - Zone 1 | | 1 | UEF | UCS4X | 7.85 | 79.21 | 44.29 | 49.82 | 9.09 | | | | | | |
| | 4 Wire Copper Unbundled Sub-Loop Distribution - Zone 2 | | 2 | UEF | UCS4X | 14.17 | 79.21 | 44.29 | 49.82 | 9.09 | | | | | | |
| | 4 Wire Copper Unbundled Sub-Loop Distribution - Zone 3 | | 3 | UEF | UCS4X | 12.64 | 79.21 | 44.29 | 49.82 | 9.09 | | | | | | |
| | Order Coordination for Unbundled Sub-Loops, per sub-loop pair | | | UEF | USBMC | | 8.17 | 8.17 | | | | | | | | |
| | Loop Tagging Service Level 1, Unbundled Copper Loop, Non-Designed and Distribution Subloops | | | UEF, UEANL | URETL | | 8.95 | 0.88 | | | | | | | | |
| | Loop Testing - Basic 1st Half Hour | | | UEF | URET1 | | 34.23 | 0.00 | | | | | | | | |
| | Loop Testing - Basic Additional Half Hour | | | UEF | URETA | | 19.90 | 19.90 | | | | | | | | |
| **Unbundled Sub-Loop Modification** | | | | | | | | | | | | | | | | |
| | Unbundled Sub-Loop Modification - 2-W Copper Dist Load Coil/Equip Removal per 2-W PR | | | UEF | ULM2X | | 176.17 | 5.11 | | | | | | | | |
| | Unbundled Sub-loop Modification - 4-W Copper Dist Load Coil/Equip Removal per 4-W PR | | | UEF | ULM4X | | 176.17 | 5.11 | | | | | | | | |
| | Unbundled Loop Modification, Removal of Bridge Tap, per unbundled loop | | | UEF | ULMBT | | 278.82 | 6.13 | | | | | | | | |
| **Unbundled Network Terminating Wire (UNTW)** | | | | | | | | | | | | | | | | |
| | Unbundled Network Terminating Wire (UNTW) per Pair | | | UENTW | UENPP | 0.3303 | 30.20 | 30.20 | | | | | | | | |
| **Network Interface Device (NID)** | | | | | | | | | | | | | | | | |
| | Network Interface Device (NID) - 1-2 lines | | | UENTW | UND12 | | 43.68 | 28.79 | | | | | | | | |
| | Network Interface Device (NID) - 1-6 lines | | | UENTW | UND16 | | 64.42 | 49.53 | | | | | | | | |
| | Network Interface Device Cross Connect - 2 W | | | UENTW | UNDC2 | | 5.92 | 5.92 | | | | | | | | |
| | Network Interface Device Cross Connect - 4W | | | UENTW | UNDC4 | | 5.92 | 5.92 | | | | | | | | |
| **UNE OTHER, PROVISIONING ONLY - NO RATE** | | | | | | | | | | | | | | | | |

| UNBUNDLED NETWORK ELEMENTS - South Carolina | | | | | | | | | | | | | | Attachment: 2 Exh. A | | | |
|---|---|---|---|---|---|---|---|---|---|---|---|---|---|---|---|---|---|
| CATEGORY | | RATE ELEMENTS | Interim | Zone | BCS | USOC | RATES($) | | | | | Svc Order Submitted Elec per LSR | Svc Order Submitted Manually per LSR | Incremental Charge - Manual Svc Order vs. Electronic-1st | Incremental Charge - Manual Svc Order vs. Electronic-Add'l | Incremental Charge - Manual Svc Order vs. Electronic-Disc 1st | Incremental Charge - Manual Svc Order vs. Electronic-Disc Add'l |
| | | | | | | | Rec | Nonrecurring | | Nonrecurring Disconnect | | OSS Rates($) | | | | | |
| | | | | | | | | First | Add'l | First | Add'l | SOMEC | SOMAN | SOMAN | SOMAN | SOMAN | SOMAN |
| | | Unbundled Contact Name, Provisioning Only - no rate | | | UAL, UCL, UDC, UDL, UDN, UEA, UHL, UEANL, UEF, UEQ, UENTW, NTCVG, NTCUD, NTCD1, USL | UNECN | 0.00 | 0.00 | | | | | | | | | |
| | | Unbundled DS1 Loop - Superframe Format Option - no rate | | | USL | CCOSF | 0.00 | 0.00 | | | | | | | | | |
| | | Unbundled DS1 Loop - Expanded Superframe Format option - no rate | | | USL | CCOEF | 0.00 | 0.00 | | | | | | | | | |
| | | NID - Dispatch and Service Order for NID installation | | | UENTW | UNDBX | 0.00 | 0.00 | | | | | | | | | |
| | | UNTW Circuit Establishment, Provisioning Only - No Rate | | | UENTW | UENCE | 0.00 | 0.00 | | | | | | | | | |
| **HIGH CAPACITY UNBUNDLED LOCAL LOOP** | | | | | | | | | | | | | | | | | |
| | **NOTE: minimum billing period of three months for DS3/STS-1 Local Loop** | | | | | | | | | | | | | | | | |
| | | High Capacity Unbundled Local Loop - DS3 - Per Mile per month | | | UE3 | 1L5ND | 12.26 | | | | | | | | | | |
| | | High Capacity Unbundled Local Loop - DS3 - Facility Termination per month | | | UE3 | UE3PX | 306.36 | 452.52 | 264.53 | 119.75 | 83.77 | | | | | | |
| | | High Capacity Unbundled Local Loop - STS-1 - Per Mile per month | | | UDLSX | 1L5ND | 12.26 | | | | | | | | | | |
| | | High Capacity Unbundled Local Loop - STS-1 - Facility Termination per month | | | UDLSX | UDLS1 | 313.49 | 452.52 | 264.53 | 119.75 | 83.77 | | | | | | |
| **LOOP MAKE-UP** | | | | | | | | | | | | | | | | | |
| | | Loop Makeup - Preordering Without Reservation, per working or spare facility queried (Manual). | | | UMK | UMKLW | | 24.04 | 24.04 | | | | | | | | |
| | | Loop Makeup - Preordering With Reservation, per spare facility queried (Manual). | | | UMK | UMKLP | | 25.49 | 25.49 | | | | | | | | |
| | | Loop Makeup--With or Without Reservation, per working or spare facility queried (Mechanized) | | | UMK | UMKMQ | | 0.34 | 0.34 | | | | | | | | |
| **LINE SPLITTING** | | | | | | | | | | | | | | | | | |
| | **END USER ORDERING-CENTRAL OFFICE BASED** | | | | | | | | | | | | | | | | |
| | | Line Splitting - per line activation DLEC owned splitter | | | UEPSR UEPSB | UREOS | 0.61 | | | | | | | | | | |
| | | Line Splitting - per line activation BST owned - physical | | | UEPSR UEPSB | UREBP | 0.61 | 37.09 | 21.24 | 20.07 | 9.85 | | | | | | |
| | | Line Splitting - per line activation BST owned - virtual | | | UEPSR UEPSB | UREBV | 0.61 | 37.09 | 21.24 | 20.07 | 9.85 | | | | | | |
| | **UNBUNDLED EXCHANGE ACCESS LOOP** | | | | | | | | | | | | | | | | |
| | **2-WIRE ANALOG VOICE GRADE LOOP** | | | | | | | | | | | | | | | | |
| | | 2 Wire Analog Voice Grade Loop-Service Level 1-Line Splitting-Zone 1 | | 1 | UEPSR UEPSB | UEALS | 14.94 | 37.92 | 17.62 | 23.56 | 5.32 | | | | | | |
| | | 2 Wire Analog Voice Grade Loop-Service Level 1-Line Splitting-Zone 1 | | 1 | UEPSR UEPSB | UEABS | 14.94 | 37.92 | 17.62 | 23.56 | 5.32 | | | | | | |
| | | 2 Wire Analog Voice Grade Loop- Service Level 1-Line Splitting-Zone 2 | | 2 | UEPSR UEPSB | UEALS | 21.39 | 37.92 | 17.62 | 23.56 | 5.32 | | | | | | |
| | | 2 Wire Analog Voice Grade Loop- Service Level 1-Line Splitting-Zone 2 | | 2 | UEPSR UEPSB | UEABS | 21.39 | 37.92 | 17.62 | 23.56 | 5.32 | | | | | | |
| | | 2 Wire Analog Voice Grade Loop-Service Level 1-Line Splitting-Zone 3 | | 3 | UEPSR UEPSB | UEALS | 26.72 | 37.92 | 17.62 | 23.56 | 5.32 | | | | | | |
| | | 2 Wire Analog Voice Grade Loop-Service Level 1-Line Splitting-Zone 3 | | 3 | UEPSR UEPSB | UEABS | 26.72 | 37.92 | 17.62 | 23.56 | 5.32 | | | | | | |
| | **PHYSICAL COLLOCATION** | | | | | | | | | | | | | | | | |
| | | Physical Collocation-2 Wire Cross Connects (Loop) for Line Splitting | | | UEPSR UEPSB | PE1LS | 0.0341 | 12.32 | 11.83 | 6.04 | 5.45 | | | | | | |
| | **VIRTUAL COLLOCATION** | | | | | | | | | | | | | | | | |
| | | Virtual Collocation-2 Wire Cross Connects (Loop) for Line Splitting | | | UEPSR UEPSB | VE1LS | 0.0317 | 12.32 | 11.83 | 6.04 | 5.45 | | | | | | |
| **UNBUNDLED DEDICATED TRANSPORT** | | | | | | | | | | | | | | | | | |
| | **INTEROFFICE CHANNEL - DEDICATED TRANSPORT** | | | | | | | | | | | | | | | | |
| | | Interoffice Channel - Dedicated Transport - 2-Wire Voice Grade - Per Mile per month | | | U1TVX | 1L5XX | 0.0167 | | | | | | | | | | |
| | | Interoffice Channel - Dedicated Transport- 2- Wire Voice Grade - Facility Termination | | | U1TVX | U1TV2 | 24.30 | 40.63 | 27.47 | 16.77 | 6.91 | | | | | | |

| UNBUNDLED NETWORK ELEMENTS - South Carolina | | | | | | | | | | | | | | Attachment: 2 Exh. A | | | |
|---|---|---|---|---|---|---|---|---|---|---|---|---|---|---|---|---|---|
| CATEGORY | | RATE ELEMENTS | Interim | Zone | BCS | USOC | RATES($) | | | | | Svc Order Submitted Elec per LSR | Svc Order Submitted Manually per LSR | Incremental Charge - Manual Svc Order vs. Electronic-1st | Incremental Charge - Manual Svc Order vs. Electronic-Add'l | Incremental Charge - Manual Svc Order vs. Electronic-Disc 1st | Incremental Charge - Manual Svc Order vs. Electronic-Disc Add'l |
| | | | | | | | Rec | Nonrecurring | | Nonrecurring Disconnect | | OSS Rates($) | | | | | |
| | | | | | | | | First | Add'l | First | Add'l | SOMEC | SOMAN | SOMAN | SOMAN | SOMAN | SOMAN |
| | | Interoffice Channel - Dedicated Transpor t- 2-Wire Voice Grade Rev Bat. - Per Mile per month | | | U1TVX | 1L5XX | 0.0167 | | | | | | | | | | |
| | | Interoffice Channel - Dedicated Transport- 2- Wire VG Rev Bat. - Facility Termination | | | U1TVX | U1TR2 | 24.30 | 40.63 | 27.47 | 16.77 | 6.91 | | | | | | |
| | | Interoffice Channel - Dedicated Transport - 4-Wire Voice Grade - Per Mile per month | | | U1TVX | 1L5XX | 0.0167 | | | | | | | | | | |
| | | Interoffice Channel - Dedicated Transport - 4- Wire Voice Grade - Facility Termination | | | U1TVX | U1TV4 | 21.29 | 40.63 | 27.47 | 16.77 | 6.91 | | | | | | |
| | | Interoffice Channel - Dedicated Transport - 56 kbps - per mile per month | | | U1TDX | 1L5XX | 0.0167 | | | | | | | | | | |
| | | Interoffice Channel - Dedicated Transport - 56 kbps - Facility Termination | | | U1TDX | U1TD5 | 16.76 | 40.63 | 27.47 | 16.77 | 6.91 | | | | | | |
| | | Interoffice Channel - Dedicated Transport - 64 kbps - per mile per month | | | U1TDX | 1L5XX | 0.0167 | | | | | | | | | | |
| | | Interoffice Channel - Dedicated Transport - 64 kbps - Facility Termination | | | U1TDX | U1TD6 | 16.76 | 40.63 | 27.47 | 16.77 | 6.91 | | | | | | |
| | | Wholesale to UNE Switch-As-Is Charge | | | U1TDX | UNCCC | | 5.61 | 5.61 | 7.00 | 7.00 | | | | | | |
| | | Interoffice Channel - Dedicated Channel - DS1 - Per Mile per month | | | U1TD1 | 1L5XX | 0.3415 | | | | | | | | | | |
| | | Interoffice Channel - Dedicated Tranport - DS1 - Facility Termination | | | U1TD1 | U1TF1 | 77.14 | 89.47 | 81.99 | 16.39 | 14.48 | | | | | | |
| | | Wholesale to UNE Switch-As-Is Charge | | | U1TD1 | UNCCC | | 5.61 | 5.61 | 7.00 | 7.00 | | | | | | |
| | | Interoffice Channel - Dedicated Transport - DS3 - Per Mile per month | | | U1TD3 | 1L5XX | 8.02 | | | | | | | | | | |
| | | Interoffice Channel - Dedicated Transport - DS3 - Facility Termination per month | | | U1TD3 | U1TF3 | 880.65 | 279.37 | 163.12 | 60.33 | 58.59 | | | | | | |
| | | Wholesale to UNE Switch-As-Is Charge | | | U1TD3 | UNCCC | | 5.61 | 5.61 | 7.00 | 7.00 | | | | | | |
| | | Interoffice Channel - Dedicated Transport - STS-1 - Per Mile per month | | | U1TS1 | 1L5XX | 8.02 | | | | | | | | | | |
| | | Interoffice Channel - Dedicated Transport - STS-1 - Facility Termination | | | U1TS1 | U1TFS | 880.55 | 279.37 | 163.12 | 60.33 | 58.59 | | | | | | |
| | | Wholesale to UNE Switch-As-Is Charge | | | U1TS1 | UNCCC | | 5.61 | 5.61 | 7.00 | 7.00 | | | | | | |
| | **UNBUNDLED DARK FIBER** | | | | | | | | | | | | | | | | |
| | | Dark Fiber, Per Four Fiber Strands, Per Route Mile Or Fraction Thereof - Interoffice Transport | | | UDF, UDFCX | 1L5DF | 36.41 | 640.51 | 138.17 | 317.76 | 198.11 | | | | | | |
| **911 PBX LOCATE** | | | | | | | | | | | | | | | | | |
| | **911 PBX LOCATE DATABASE CAPABILITY** | | | | | | | | | | | | | | | | |
| | | Service Establishment per CLEC per End User Account | | | 9PBDC | 9PBEU | | 1,813.00 | | | | | | | | | |
| | | Changes to TN Range or Customer Profile | | | 9PBDC | 9PBTN | | 181.40 | | | | | | | | | |
| | | Per Telephone Number (Monthly) | | | 9PBDC | 9PBMM | 0.07 | | | | | | | | | | |
| | | Change Company (Service Provider) ID | | | 9PBDC | 9PBPC | | 532.48 | | | | | | | | | |
| | | PBX Locate Service Support per CLEC (Monthlt) | | | 9PBDC | 9PBMR | 181.29 | | | | | | | | | | |
| | | Service Order Charge | | | 9PBDC | 9PBSC | | 15.69 | | | | | | | | | |
| | **911 PBX LOCATE TRANSPORT COMPONENT** | | | | | | | | | | | | | | | | |
| | **See Att 3** | | | | | | | | | | | | | | | | |
| **ENHANCED EXTENDED LINK (EELs)** | | | | | | | | | | | | | | | | | |
| | **NOTE: The monthly recurring and non-recurring charges below will apply and the Switch-As-Is Charge will not apply for UNE combinations provisioned as ' Ordinarily Combined' Network Elements.** | | | | | | | | | | | | | | | | |
| | **NOTE: The monthly recurring and the Switch-As-Is Charge and not the non-recurring charges below will apply for UNE combinations provisioned as ' Currently Combined' Network Elements.** | | | | | | | | | | | | | | | | |
| | **EXTENTED 2-WIRE VOICE GRADE EXTENDED LOOP WITH DEDICATED DS1 INTEROFFICE TRANSPORT** | | | | | | | | | | | | | | | | |
| | | First 2-Wire VG Loop (SL2) in Combination - Zone 1 | | 1 | UNCVX | UEAL2 | 16.68 | 105.98 | 68.43 | 53.05 | 10.61 | | | | | | |
| | | First 2-Wire VG Loop (SL2) in Combination - Zone 2 | | 2 | UNCVX | UEAL2 | 23.13 | 105.98 | 68.43 | 53.05 | 10.61 | | | | | | |
| | | First 2-Wire VG Loop (SL2) in Combination - Zone 3 | | 3 | UNCVX | UEAL2 | 28.46 | 105.98 | 68.43 | 53.05 | 10.61 | | | | | | |
| | | Interoffice Transport - Dedicated - DS1 combination - Per Mile per month | | | UNC1X | 1L5XX | 0.27 | | | | | | | | | | |
| | | Interoffice Transport - Dedicated - DS1 combination - Facility Termination per month | | | UNC1X | U1TF1 | 61.71 | 89.47 | 81.99 | 16.39 | 14.48 | | | | | | |
| | | 1/0 Channelization System in combination Per Month | | | UNC1X | MQ1 | 107.57 | 91.24 | 62.71 | 10.56 | 9.81 | | | | | | |
| | | Voice Grade COCI - Per Month | | | UNCVX | 1D1VG | 0.56 | 6.59 | 4.73 | 0.00 | 0.00 | | | | | | |

| CATEGORY | RATE ELEMENTS | Interim | Zone | BCS | USOC | RATES($) | | | | | Svc Order Submitted Elec per LSR | Svc Order Submitted Manually per LSR | Incremental Charge - Manual Svc Order vs. Electronic-1st | Incremental Charge - Manual Svc Order vs. Electronic-Add'l | Incremental Charge - Manual Svc Order vs. Electronic-Disc 1st | Incremental Charge - Manual Svc Order vs. Electronic-Disc Add'l |
|---|---|---|---|---|---|---|---|---|---|---|---|---|---|---|---|---|
| | | | | | | Rec | Nonrecurring | | Nonrecurring Disconnect | | OSS Rates($) | | | | | |
| | | | | | | | First | Add'l | First | Add'l | SOMEC | SOMAN | SOMAN | SOMAN | SOMAN | SOMAN |
| | Each Additional 2-Wire VG Loop (SL 2) in Combination - Zone 1 | | 1 | UNCVX | UEAL2 | 16.68 | 105.98 | 68.43 | 53.05 | 10.61 | | | | | | |
| | Each Additional 2-Wire VG Loop (SL 2) in Combination - Zone 2 | | 2 | UNCVX | UEAL2 | 23.13 | 105.98 | 68.43 | 53.05 | 10.61 | | | | | | |
| | Each Additional 2-Wire VG Loop (SL 2) in Combination - Zone 3 | | 3 | UNCVX | UEAL2 | 28.46 | 105.98 | 68.43 | 53.05 | 10.61 | | | | | | |
| | Voice Grade COCI - Per Month | | | UNCVX | 1D1VG | 0.56 | 6.59 | 4.73 | 0.00 | 0.00 | | | | | | |
| | Wholesale to UNE, Switch-As-Is Charge | | | UNC1X | UNCCC | | 5.61 | 5.61 | 7.00 | 7.00 | | | | | | |
| | **EXTENDED 4-WIRE VOICE GRADE EXTENDED LOOP WITH DEDICATED DS1 INTEROFFICE TRANSPORT** | | | | | | | | | | | | | | | |
| | First 4-Wire Analog Voice Grade Loop in Combination - Zone 1 | | 1 | UNCVX | UEAL4 | 32.59 | 132.38 | 94.83 | 59.35 | 14.61 | | | | | | |
| | First 4-Wire Analog Voice Grade Loop in Combination - Zone 2 | | 2 | UNCVX | UEAL4 | 43.89 | 132.38 | 94.83 | 59.35 | 14.61 | | | | | | |
| | First 4-Wire Analog Voice Grade Loop in Combination - Zone 3 | | 3 | UNCVX | UEAL4 | 43.38 | 132.38 | 94.83 | 59.35 | 14.61 | | | | | | |
| | Interoffice Transport - Dedicated - DS1 combination - Per Mile Per Month | | | UNC1X | 1L5XX | 0.27 | | | | | | | | | | |
| | Interoffice Transport - Dedicated - DS1 - Facility Termination Per Month | | | UNC1X | U1TF1 | 61.71 | 89.47 | 81.99 | 16.39 | 14.48 | | | | | | |
| | 1/0 Channel System in combination Per Month | | | UNC1X | MQ1 | 107.57 | 91.24 | 62.71 | 10.56 | 9.81 | | | | | | |
| | Voice Grade COCI in combination - per month | | | UNCVX | 1D1VG | 0.56 | 6.59 | 4.73 | 0.00 | 0.00 | | | | | | |
| | Additional 4-Wire Analog Voice Grade Loop in same DS1 Interoffice Transport Combination - Zone 1 | | 1 | UNCVX | UEAL4 | 32.59 | 132.38 | 94.83 | 59.35 | 14.61 | | | | | | |
| | Additional 4-Wire Analog Voice Grade Loop in same DS1 Interoffice Transport Combination - Zone 2 | | 2 | UNCVX | UEAL4 | 43.89 | 132.38 | 94.83 | 59.35 | 14.61 | | | | | | |
| | Additional 4-Wire Analog Voice Grade Loop in same DS1 Interoffice Transport Combination - Zone 3 | | 3 | UNCVX | UEAL4 | 43.38 | 132.38 | 94.83 | 59.35 | 14.61 | | | | | | |
| | Additional Voice Grade COCI in combination - per month | | | UNCVX | 1D1VG | 0.56 | 6.59 | 4.73 | 0.00 | 0.00 | | | | | | |
| | Wholesale to UNE, Switch-As-Is Charge | | | UNC1X | UNCCC | | 5.61 | 5.61 | 7.00 | 7.00 | | | | | | |
| | **EXTENDED 4-WIRE 56 KBPS EXTENDED DIGITAL LOOP WITH DEDICATED DS1 INTEROFFICE TRANSPORT** | | | | | | | | | | | | | | | |
| | First 4-Wire 56Kbps Digital Grade Loop in Combination - Zone 1 | | 1 | UNCDX | UDL56 | 29.93 | 126.66 | 89.12 | 59.35 | 14.61 | | | | | | |
| | First 4-Wire 56Kbps Digital Grade Loop in Combination - Zone 2 | | 2 | UNCDX | UDL56 | 33.99 | 126.66 | 89.12 | 59.35 | 14.61 | | | | | | |
| | First 4-Wire 56Kbps Digital Grade Loop in Combination - Zone 3 | | 3 | UNCDX | UDL56 | 34.74 | 126.66 | 89.12 | 59.35 | 14.61 | | | | | | |
| | Interoffice Transport - Dedicated - DS1 combination - Per Mile Per Month | | | UNC1X | 1L5XX | 0.27 | | | | | | | | | | |
| | Interoffice Transport - Dedicated - DS1 - combination Facility Termination Per Month | | | UNC1X | U1TF1 | 61.71 | 89.47 | 81.99 | 16.39 | 14.48 | | | | | | |
| | 1/0 Channel System in combination Per Month | | | UNC1X | MQ1 | 107.57 | 91.24 | 62.71 | 10.56 | 9.81 | | | | | | |
| | OCU-DP COCI (data) per month (2.4-64kbs) | | | UNCDX | 1D1DD | 1.19 | 6.59 | 4.73 | 0.00 | 0.00 | | | | | | |
| | Additional 4-Wire 56Kbps Digital Grade Loop in same DS1 Interoffice Transport Combination - Zone 1 | | 1 | UNCDX | UDL56 | 29.93 | 126.66 | 89.12 | 59.35 | 14.61 | | | | | | |
| | Additional 4-Wire 56Kbps Digital Grade Loop in same DS1 Interoffice Transport Combination - Zone 2 | | 2 | UNCDX | UDL56 | 33.99 | 126.66 | 89.12 | 59.35 | 14.61 | | | | | | |
| | Additional 4-Wire 56Kbps Digital Grade Loop in same DS1 Interoffice Transport Combination - Zone 3 | | 3 | UNCDX | UDL56 | 34.74 | 126.66 | 89.12 | 59.35 | 14.61 | | | | | | |
| | Additional OCU-DP COCI (data) - in combination per month (2.4-64kbs) | | | UNCDX | 1D1DD | 1.19 | 6.59 | 4.73 | 0.00 | 0.00 | | | | | | |
| | Wholesale to UNE, Switch-As-Is Charge | | | UNC1X | UNCCC | | 5.61 | 5.61 | 7.00 | 7.00 | | | | | | |
| | **EXTENDED 4-WIRE 64 KBPS EXTENDED DIGITAL LOOP WITH DEDICATED DS1 INTEROFFICE TRANSPORT** | | | | | | | | | | | | | | | |
| | First 4-Wire 64Kbps Digital Grade Loop in Combination - Zone 1 | | 1 | UNCDX | UDL64 | 29.93 | 126.66 | 89.12 | 59.35 | 14.61 | | | | | | |
| | First 4-Wire 64Kbps Digital Grade Loop in Combination - Zone 2 | | 2 | UNCDX | UDL64 | 33.99 | 126.66 | 89.12 | 59.35 | 14.61 | | | | | | |
| | First 4-Wire 64Kbps Digital Grade Loop in Combination - Zone 3 | | 3 | UNCDX | UDL64 | 34.74 | 126.66 | 89.12 | 59.35 | 14.61 | | | | | | |

| CATEGORY | RATE ELEMENTS | Interim | Zone | BCS | USOC | RATES($) | | | | | Svc Order Submitted Elec per LSR | Svc Order Submitted Manually per LSR | Incremental Charge - Manual Svc Order vs. Electronic-1st | Incremental Charge - Manual Svc Order vs. Electronic-Add'l | Incremental Charge - Manual Svc Order vs. Electronic-Disc 1st | Incremental Charge - Manual Svc Order vs. Electronic-Disc Add'l |
|---|---|---|---|---|---|---|---|---|---|---|---|---|---|---|---|---|
| | | | | | | Rec | Nonrecurring | | Nonrecurring Disconnect | | OSS Rates($) | | | | | |
| | | | | | | | First | Add'l | First | Add'l | SOMEC | SOMAN | SOMAN | SOMAN | SOMAN | SOMAN |
| | Interoffice Transport - Dedicated - DS1 combination - Per Mile Per Month | | | UNC1X | 1L5XX | 0.27 | | | | | | | | | | |
| | interoffice Transport - Dedicated - DS1 combination - Facility Termination Per Month | | | UNC1X | U1TF1 | 61.71 | 89.47 | 81.99 | 16.39 | 14.48 | | | | | | |
| | 1/0 Channel System in combination Per Month | | | UNC1X | MQ1 | 107.57 | 91.24 | 62.71 | 10.56 | 9.81 | | | | | | |
| | OCU-DP COCI (data) - in combination - per month (2.4-64kbs) | | | UNCDX | 1D1DD | 1.19 | 6.59 | 4.73 | 0.00 | 0.00 | | | | | | |
| | Additional 4-Wire 64Kbps Digital Grade Loop in same DS1 Interoffice Transport Combination - Zone 1 | | 1 | UNCDX | UDL64 | 29.93 | 126.66 | 89.12 | 59.35 | 14.61 | | | | | | |
| | Additional 4-Wire 64Kbps Digital Grade Loop in same DS1 Interoffice Transport Combination - Zone 2 | | 2 | UNCDX | UDL64 | 33.99 | 126.66 | 89.12 | 59.35 | 14.61 | | | | | | |
| | Additional 4-Wire 64Kbps Digital Grade Loop in same DS1 Interoffice Transport Combination - Zone 3 | | 3 | UNCDX | UDL64 | 34.74 | 126.66 | 89.12 | 59.35 | 14.61 | | | | | | |
| | Additional OCU-DP COCI (data) - in combination - per month (2.4-64kbs) | | | UNCDX | 1D1DD | 1.19 | 6.59 | 4.73 | 0.00 | 0.00 | | | | | | |
| | Wholesale to UNE, Switch-As-Is Charge | | | UNC1X | UNCCC | | 5.61 | 5.61 | 7.00 | 7.00 | | | | | | |
| | **EXTENDED 4-WIRE DS1 DIGITAL EXTENDED LOOP WITH DEDICATED DS1 INTEROFFICE TRANSPORT** | | | | | | | | | | | | | | | |
| | 4-Wire DS1 Digital Loop in Combination - Zone 1 | | 1 | UNC1X | USLXX | 90.87 | 253.03 | 157.89 | 44.80 | 11.73 | | | | | | |
| | 4-Wire DS1 Digital Loop in Combination - Zone 2 | | 2 | UNC1X | USLXX | 155.43 | 253.03 | 157.89 | 44.80 | 11.73 | | | | | | |
| | 4-Wire DS1 Digital Loop in Combination - Zone 3 | | 3 | UNC1X | USLXX | 261.89 | 253.03 | 157.89 | 44.80 | 11.73 | | | | | | |
| | Interoffice Transport - Dedicated - DS1 combination - Per Mile Per Month | | | UNC1X | 1L5XX | 0.27 | | | | | | | | | | |
| | Interoffice Transport - Dedicated - DS1 combination - Facility Termination Per Month | | | UNC1X | U1TF1 | 61.71 | 89.47 | 81.99 | 16.39 | 14.48 | | | | | | |
| | Wholesale to UNE, Switch-As-Is Charge | | | UNC1X | UNCCC | | 5.61 | 5.61 | 7.00 | 7.00 | | | | | | |
| | **EXTENDED 4-WIRE DS1 DIGITAL EXTENDED LOOP WITH DEDICATED DS3 INTEROFFICE TRANSPORT** | | | | | | | | | | | | | | | |
| | First DS1Loop in Combination - Zone 1 | | 1 | UNC1X | USLXX | 90.87 | 253.03 | 157.89 | 44.80 | 11.73 | | | | | | |
| | First DS1Loop in Combination - Zone 2 | | 2 | UNC1X | USLXX | 155.43 | 253.03 | 157.89 | 44.80 | 11.73 | | | | | | |
| | First DS1Loop in Combination - Zone 3 | | 3 | UNC1X | USLXX | 261.89 | 253.03 | 157.89 | 44.80 | 11.73 | | | | | | |
| | Interoffice Transport - Dedicated - DS3 combination - Per Mile Per Month | | | UNC3X | 1L5XX | 6.42 | | | | | | | | | | |
| | Interoffice Transport - Dedicated - DS3 - Facility Termination per month | | | UNC3X | U1TF3 | 704.52 | 279.37 | 163.12 | 60.33 | 58.59 | | | | | | |
| | 3/1Channel System in combination per month | | | UNC3X | MQ3 | 144.02 | 178.54 | 94.18 | 33.33 | 31.90 | | | | | | |
| | DS1 COCI in combination per month | | | UNC1X | UC1D1 | 8.64 | 6.59 | 4.73 | 0.00 | 0.00 | | | | | | |
| | Additional DS1Loop in DS3 Interoffice Transport Combination - Zone 1 | | 1 | UNC1X | USLXX | 90.87 | 253.03 | 157.89 | 44.80 | 11.73 | | | | | | |
| | Additional DS1Loop in DS3 Interoffice Transport Combination - Zone 2 | | 2 | UNC1X | USLXX | 155.43 | 253.03 | 157.89 | 44.80 | 11.73 | | | | | | |
| | Additional DS1Loop in DS3 Interoffice Transport Combination - Zone 3 | | 3 | UNC1X | USLXX | 261.89 | 253.03 | 157.89 | 44.80 | 11.73 | | | | | | |
| | Additoinal DS1 COCI in combination per month | | | UNC1X | UC1D1 | 8.64 | 6.59 | 4.73 | 0.00 | 0.00 | | | | | | |
| | Wholesale to UNE, Switch-As-Is Charge | | | UNC3X | UNCCC | | 5.61 | 5.61 | 7.00 | 7.00 | | | | | | |
| | **EXTENDED 2-WIRE VOICE GRADE EXTENDED LOOP/ 2-WIRE VOICE GRADE INTEROFFICE TRANSPORT** | | | | | | | | | | | | | | | |
| | 2-WireVG Loop in combination - Zone 1 | | 1 | UNCVX | UEAL2 | 16.68 | 105.98 | 68.43 | 53.05 | 10.61 | | | | | | |
| | 2-WireVG Loop in combination - Zone 2 | | 2 | UNCVX | UEAL2 | 23.13 | 105.98 | 68.43 | 53.05 | 10.61 | | | | | | |
| | 2-WireVG Loop in combination - Zone 3 | | 3 | UNCVX | UEAL2 | 28.46 | 105.98 | 68.43 | 53.05 | 10.61 | | | | | | |
| | Interoffice Transport - 2-wire VG - Dedicated- Per Mile Per Month | | | UNCVX | 1L5XX | 0.0134 | | | | | | | | | | |
| | Interoffice Transport - 2-wire VG - Dedicated - Facility Termination per month | | | UNCVX | U1TV2 | 19.44 | 40.63 | 27.47 | 16.77 | 6.91 | | | | | | |
| | Wholesale to UNE, Switch-As-Is Charge | | | UNCVX | UNCCC | | 5.61 | 5.61 | 7.00 | 7.00 | | | | | | |
| | **EXTENDED 4-WIRE VOICE GRADE EXTENDED LOOP/ 4 WIRE VOICE GRADE INTEROFFICE TRANSPORT** | | | | | | | | | | | | | | | |
| | 4-WireVG Loop in combination - Zone 1 | | 1 | UNCVX | UEAL4 | 32.59 | 132.38 | 94.83 | 59.35 | 14.61 | | | | | | |
| | 4-WireVG Loop in combination - Zone 2 | | 2 | UNCVX | UEAL4 | 43.89 | 132.38 | 94.83 | 59.35 | 14.61 | | | | | | |
| | 4-WireVG Loop in combination - Zone 3 | | 3 | UNCVX | UEAL4 | 43.38 | 132.38 | 94.83 | 59.35 | 14.61 | | | | | | |
| | Interoffice Transport - 4-wire VG - Dedicated - Per Mile Per Month | | | UNCVX | 1L5XX | 0.0134 | | | | | | | | | | |
| | Interoffice Transport - 4-wire VG - Dedicated - Facility Termination per month | | | UNCVX | U1TV4 | 17.03 | 40.63 | 27.47 | 16.77 | 6.91 | | | | | | |

| CATEGORY | RATE ELEMENTS | Interim | Zone | BCS | USOC | RATES($) | | | | | Svc Order Submitted Elec per LSR | Svc Order Submitted Manually per LSR | Incremental Charge - Manual Svc Order vs. Electronic-1st | Incremental Charge - Manual Svc Order vs. Electronic-Add'l | Incremental Charge - Manual Svc Order vs. Electronic-Disc 1st | Incremental Charge - Manual Svc Order vs. Electronic-Disc Add'l |
|---|---|---|---|---|---|---|---|---|---|---|---|---|---|---|---|---|
| | | | | | | Rec | Nonrecurring | | Nonrecurring Disconnect | | OSS Rates($) | | | | | |
| | | | | | | | First | Add'l | First | Add'l | SOMEC | SOMAN | SOMAN | SOMAN | SOMAN | SOMAN |
| | Wholesale to UNE, Switch-As-Is Charge | | | UNCVX | UNCCC | | 5.61 | 5.61 | 7.00 | 7.00 | | | | | | |
| | **EXTENDED DS3 DIGITAL EXTENDED LOOP WITH DEDICATED DS3 INTEROFFICE TRANSPORT** | | | | | | | | | | | | | | | |
| | DS3 Local Loop in combination - per mile per month | | | UNC3X | 1L5ND | 12.26 | | | | | | | | | | |
| | DS3 Local Loop in combination - Facility Termination per month | | | UNC3X | UE3PX | 306.36 | 452.52 | 264.53 | 119.75 | 83.77 | | | | | | |
| | Interoffice Transport - Dedicated - DS3 - Per Mile per month | | | UNC3X | 1L5XX | 6.42 | | | | | | | | | | |
| | Interoffice Transport - Dedicated - DS3 combination - Facility Termination per month | | | UNC3X | U1TF3 | 704.52 | 279.37 | 163.12 | 60.33 | 58.59 | | | | | | |
| | Wholesale to UNE, Switch-As-Is Charge | | | UNC3X | UNCCC | | 5.61 | 5.61 | 7.00 | 7.00 | | | | | | |
| | **EXTENDED STS-1 DIGITAL EXTENDED LOOP WITH DEDICATED STS-1 INTEROFFICE TRANSPORT** | | | | | | | | | | | | | | | |
| | STS-1 Local Lolp in combination - per mile per month | | | UNCSX | 1L5ND | 12.26 | | | | | | | | | | |
| | STS-1 Local Loop in combination - Facility Termination per month | | | UNCSX | UDLS1 | 313.49 | 452.52 | 264.53 | 119.75 | 83.77 | | | | | | |
| | Interoffice Transport - Dedicated - STS-1 combination - per mile per month | | | UNCSX | 1L5XX | 6.42 | | | | | | | | | | |
| | Interoffice Transport - Dedicated - STS-1 combination - Facility Termination per month | | | UNCSX | U1TFS | 704.44 | 279.37 | 163.12 | 60.33 | 58.59 | | | | | | |
| | Wholesale to UNE, Switch-As-Is Charge | | | UNCSX | UNCCC | | 5.61 | 5.61 | 7.00 | 7.00 | | | | | | |
| | **EXTENDED 2-WIRE ISDN EXTENDED LOOP WITH DS1 INTEROFFICE TRANSPORT** | | | | | | | | | | | | | | | |
| | First 2-Wire ISDN Loop in Combination - Zone 1 | | 1 | UNCNX | U1L2X | 25.21 | 117.58 | 80.03 | 53.05 | 10.61 | | | | | | |
| | First 2-Wire ISDN Loop in Combination - Zone 2 | | 2 | UNCNX | U1L2X | 32.76 | 117.58 | 80.03 | 53.05 | 10.61 | | | | | | |
| | First 2-Wire ISDN Loop in Combination - Zone 3 | | 3 | UNCNX | U1L2X | 37.70 | 117.58 | 80.03 | 53.05 | 10.61 | | | | | | |
| | Interoffice Transport - Dedicated - DS1 combination - per mile per month | | | UNC1X | 1L5XX | 0.27 | | | | | | | | | | |
| | Interoffice Transport - Dedicated - DS1 combination - Facility Termination per month | | | UNC1X | U1TF1 | 61.71 | 89.47 | 81.99 | 16.39 | 14.48 | | | | | | |
| | 1/0 Channel System in combination - per month | | | UNC1X | MQ1 | 107.57 | 91.24 | 62.71 | 10.56 | 9.81 | | | | | | |
| | 2-wire ISDN COCI (BRITE) - in combination - per month | | | UNCNX | UC1CA | 2.56 | 6.59 | 4.73 | 0.00 | 0.00 | | | | | | |
| | Additional 2-wire ISDN Loop in same DS1Interoffice Transport Combination - Zone 1 | | 1 | UNCNX | U1L2X | 25.21 | 117.58 | 80.03 | 53.05 | 10.61 | | | | | | |
| | Additional 2-wire ISDN Loop in same DS1Interoffice Transport Combination - Zone 2 | | 2 | UNCNX | U1L2X | 32.76 | 117.58 | 80.03 | 53.05 | 10.61 | | | | | | |
| | Additional 2-wire ISDN Loop in same DS1Interoffice Transport Combination - Zone 3 | | 3 | UNCNX | U1L2X | 37.70 | 117.58 | 80.03 | 53.05 | 10.61 | | | | | | |
| | Additional 2-wire ISDN COCI (BRITE) - in combination- per month | | | UNCNX | UC1CA | 2.56 | 6.59 | 4.73 | 0.00 | 0.00 | | | | | | |
| | Wholesale to UNE, Switch-As-Is Charge | | | UNC1X | UNCCC | | 5.61 | 5.61 | 7.00 | 7.00 | | | | | | |
| | **EXTENDED 4-WIRE DS1 DIGITAL EXTENDED LOOP WITH DEDICATED STS-1 INTEROFFICE TRANSPORT** | | | | | | | | | | | | | | | |
| | First DS1 Loop Combination - Zone 1 | | 1 | UNC1X | USLXX | 90.87 | 253.03 | 157.89 | 44.80 | 11.73 | | | | | | |
| | First DS1 Loop Combination - Zone 2 | | 2 | UNC1X | USLXX | 155.43 | 253.03 | 157.89 | 44.80 | 11.73 | | | | | | |
| | First DS1 Loop Combination - Zone 3 | | 3 | UNC1X | USLXX | 261.89 | 253.03 | 157.89 | 44.80 | 11.73 | | | | | | |
| | Interoffice Transport - Dedicated - STS-1 combination - Per Mile Per Month | | | UNCSX | 1L5XX | 6.42 | | | | | | | | | | |
| | Interoffice Transport - Dedicated - STS-1 combination - Facility Termination per month | | | UNCSX | U1TFS | 704.44 | 279.37 | 163.12 | 60.33 | 58.59 | | | | | | |
| | 3/1 Channel System in combination per month | | | UNCSX | MQ3 | 144.02 | 178.54 | 94.18 | 33.33 | 31.90 | | | | | | |
| | DS1 COCI in combination per month | | | UNC1X | UC1D1 | 8.64 | 6.59 | 4.73 | 0.00 | 0.00 | | | | | | |
| | Additional DS1Loop in the same STS-1 Interoffice Transport Combination - Zone 1 | | 1 | UNC1X | USLXX | 90.87 | 253.03 | 157.89 | 44.80 | 11.73 | | | | | | |
| | Additional DS1Loop in the same STS-1 Interoffice Transport Combination - Zone 2 | | 2 | UNC1X | USLXX | 155.43 | 253.03 | 157.89 | 44.80 | 11.73 | | | | | | |
| | Additional DS1Loop in the same STS-1 Interoffice Transport Combination - Zone 3 | | 3 | UNC1X | USLXX | 261.89 | 253.03 | 157.89 | 44.80 | 11.73 | | | | | | |
| | DS1 COCI in combination per month | | | UNC1X | UC1D1 | 8.64 | 6.59 | 4.73 | 0.00 | 0.00 | | | | | | |
| | Wholesale to UNE, Switch-As-Is Charge | | | UNCSX | UNCCC | | 5.61 | 5.61 | 7.00 | 7.00 | | | | | | |
| | **EXTENDED 4-WIRE 56 KBPS DIGITAL EXTENDED LOOP WITH 56 KBPS INTEROFFICE TRANSPORT** | | | | | | | | | | | | | | | |
| | 4-wire 56 kbps Local Loop in combination - Zone 1 | | 1 | UNCDX | UDL56 | 29.93 | 126.66 | 89.12 | 59.35 | 14.61 | | | | | | |
| | 4-wire 56 kbps Local Loop in combination - Zone 2 | | 2 | UNCDX | UDL56 | 33.99 | 126.66 | 89.12 | 59.35 | 14.61 | | | | | | |
| | 4-wire 56 kbps Local Loop in combination - Zone 3 | | 3 | UNCDX | UDL56 | 34.74 | 126.66 | 89.12 | 59.35 | 14.61 | | | | | | |

| CATEGORY | RATE ELEMENTS | Interim | Zone | BCS | USOC | RATES($) | | | | | Svc Order Submitted Elec per LSR | Svc Order Submitted Manually per LSR | Incremental Charge - Manual Svc Order vs. Electronic-1st | Incremental Charge - Manual Svc Order vs. Electronic-Add'l | Incremental Charge - Manual Svc Order vs. Electronic-Disc 1st | Incremental Charge - Manual Svc Order vs. Electronic-Disc Add'l |
|---|---|---|---|---|---|---|---|---|---|---|---|---|---|---|---|---|
| | | | | | | Rec | Nonrecurring | | Nonrecurring Disconnect | | OSS Rates($) | | | | | |
| | | | | | | | First | Add'l | First | Add'l | SOMEC | SOMAN | SOMAN | SOMAN | SOMAN | SOMAN |
| | Interoffice Transport - Dedicated - 4-wire 56 kbps combination - Per Mile per month | | | UNCDX | 1L5XX | 0.0134 | | | | | | | | | | |
| | Interoffice Transport - Dedicated - 4-wire 56 kbps combination - Facility Termination per month | | | UNCDX | U1TD5 | 13.41 | 40.63 | 27.47 | 16.77 | 6.91 | | | | | | |
| | Wholesale to UNE, Switch-As-Is Charge | | | UNCDX | UNCCC | | 5.61 | 5.61 | 7.00 | 7.00 | | | | | | |
| | **EXTENDED 4-WIRE 64 KBPS DIGITAL EXTENDED LOOP WITH 64 KBPS INTEROFFICE TRANSPORT** | | | | | | | | | | | | | | | |
| | 4-wire 64 kbps Lcoal Loop in Combination - Zone 1 | | 1 | UNCDX | UDL64 | 29.93 | 126.66 | 89.12 | 59.35 | 14.61 | | | | | | |
| | 4-wire 64 kbps Lcoal Loop in Combination - Zone 2 | | 2 | UNCDX | UDL64 | 33.99 | 126.66 | 89.12 | 59.35 | 14.61 | | | | | | |
| | 4-wire 64 kbps Lcoal Loop in Combination - Zone 3 | | 3 | UNCDX | UDL64 | 34.74 | 126.66 | 89.12 | 59.35 | 14.61 | | | | | | |
| | Interoffice Transport - Dedicated - 4-wire 64 kbps combination - Per Mile per month | | | UNCDX | 1L5XX | 0.0134 | | | | | | | | | | |
| | Interoffice Transport - Dedicated - 4-wire 64 kbps combination - Facility Termination per month | | | UNCDX | U1TD6 | 13.41 | 40.63 | 27.47 | 16.77 | 6.91 | | | | | | |
| | Wholesale to UNE, Switch-As-Is Charge | | | UNCDX | UNCCC | | 5.61 | 5.61 | 7.00 | 7.00 | | | | | | |
| | **EXTENDED 2-WIRE VOICE GRADE LOOP WITH DS1 INTEROFFICE TRANSPORT w/ 3/1 MUX** | | | | | | | | | | | | | | | |
| | First 2-wire VG Loop (SL2) in Combination - Zone 1 | | 1 | UNCVX | UEAL2 | 16.68 | 105.98 | 68.43 | 53.05 | 10.61 | | | | | | |
| | First 2-wire VG Loop (SL2) in Combination - Zone 2 | | 2 | UNCVX | UEAL2 | 23.13 | 105.98 | 68.43 | 53.05 | 10.61 | | | | | | |
| | First 2-wire VG Loop (SL2) in Combination - Zone 3 | | 3 | UNCVX | UEAL2 | 28.46 | 105.98 | 68.43 | 53.05 | 10.61 | | | | | | |
| | First Interoffice Transport - Dedicated - DS1 combination - Per Mile | | | UNC1X | 1L5XX | 0.27 | | | | | | | | | | |
| | First Interoffice Transport - Dedicated - DS1 combination - Facility Termination per month | | | UNC1X | U1TF1 | 61.71 | 89.47 | 81.99 | 16.39 | 14.48 | | | | | | |
| | Per each DS1 Channelization System Per Month | | | UNC1X | MQ1 | 107.57 | 91.24 | 62.71 | 10.56 | 9.81 | | | | | | |
| | Per each Voice Grade COCI - Per Month per month | | | UNCVX | 1D1VG | 0.56 | 6.59 | 4.73 | 0.00 | 0.00 | | | | | | |
| | 3/1 Channel System in combination per month | | | UNC3X | MQ3 | 144.02 | 178.54 | 94.18 | 33.33 | 31.90 | | | | | | |
| | Per each DS1 COCI in combination per month | | | UNC1X | UC1D1 | 8.64 | 6.59 | 4.73 | 0.00 | 0.00 | | | | | | |
| | Each Additional 2-Wire VG Loop(SL 2) in the same DS1 Interoffice Transport Combination - Zone 1 | | 1 | UNCVX | UEAL2 | 16.68 | 105.98 | 68.43 | 53.05 | 10.61 | | | | | | |
| | Each Additional 2-Wire VG Loop(SL2) in the same DS1 Interoffice Transport Combination - Zone 2 | | 2 | UNCVX | UEAL2 | 23.13 | 105.98 | 68.43 | 53.05 | 10.61 | | | | | | |
| | Each Additional 2-Wire VG Loop(SL2) in the same DS1 Interoffice Transport Combination - Zone 3 | | 3 | UNCVX | UEAL2 | 28.46 | 105.98 | 68.43 | 53.05 | 10.61 | | | | | | |
| | Each Additional Voice Grade COCI in combination - per month | | | UNCVX | 1D1VG | 0.56 | 6.59 | 4.73 | 0.00 | 0.00 | | | | | | |
| | Each Additional DS1 Interoffice Channel per mile in same 3/1 Channel System per month | | | UNC1X | 1L5XX | 0.27 | | | | | | | | | | |
| | Each Additional DS1 Interoffice Channel Facility Termination in same 3/1 Channel System per month | | | UNC1X | U1TF1 | 61.71 | 89.47 | 81.99 | 16.39 | 14.48 | | | | | | |
| | Each Additional DS1 COCI combination per month | | | UNC1X | UC1D1 | 8.64 | 6.59 | 4.73 | 0.00 | 0.00 | | | | | | |
| | Wholesale to UNE, Switch-As-Is Charge | | | UNC1X | UNCCC | | 5.61 | 5.61 | 7.00 | 7.00 | | | | | | |
| | **EXTENDED 4-WIRE 56 KBPS DIGITAL LOOP WITH DEDICATED DS1 INTEROFFICE TRANSPORT w/ 3/1 MUX** | | | | | | | | | | | | | | | |
| | First 4-Wire Analog Voice Grade Local Loop in Combination - Zone 1 | | 1 | UNCVX | UEAL4 | 32.59 | 132.38 | 94.83 | 59.35 | 14.61 | | | | | | |
| | First 4-Wire Analog Voice Grade Local Loop in Combination - Zone 2 | | 2 | UNCVX | UEAL4 | 43.89 | 132.38 | 94.83 | 59.35 | 14.61 | | | | | | |
| | First 4-Wire Analog Voice Grade Local Loop in Combination - Zone 3 | | 3 | UNCVX | UEAL4 | 43.38 | 132.38 | 94.83 | 59.35 | 14.61 | | | | | | |
| | First Interoffice Transport - Dedicated - DS1 combination - Per Mile Per Month | | | UNC1X | 1L5XX | 0.27 | | | | | | | | | | |
| | First Interoffice Transport - Dedicated - DS1 - Facility Termination Per Month | | | UNC1X | U1TF1 | 61.71 | 89.47 | 81.99 | 16.39 | 14.48 | | | | | | |
| | Per each 1/0 Channel System in combination Per Month | | | UNC1X | MQ1 | 107.57 | 91.24 | 62.71 | 10.56 | 9.81 | | | | | | |
| | Per each Voice Grade COCI in combination - per month | | | UNCVX | 1D1VG | 0.56 | 6.59 | 4.73 | 0.00 | 0.00 | | | | | | |
| | 3/1 Channel System in combination per month | | | UNC3X | MQ3 | 144.02 | 178.54 | 94.18 | 33.33 | 31.90 | | | | | | |
| | Per each DS1 COCI in combination per month | | | UNC1X | UC1D1 | 8.64 | 6.59 | 4.73 | 0.00 | 0.00 | | | | | | |
| | Additional 4-Wire Analog Voice Grade Loop in same DS1 Interoffice Transport Combination - Zone 1 | | 1 | UNCVX | UEAL4 | 32.59 | 132.38 | 94.83 | 59.35 | 14.61 | | | | | | |
| | Additional 4-Wire Analog Voice Grade Loop in same DS1 Interoffice Transport Combination - Zone 2 | | 2 | UNCVX | UEAL4 | 43.89 | 132.38 | 94.83 | 59.35 | 14.61 | | | | | | |

| CATEGORY | RATE ELEMENTS | Interim | Zone | BCS | USOC | RATES($) | | | | | Svc Order Submitted Elec per LSR | Svc Order Submitted Manually per LSR | Incremental Charge - Manual Svc Order vs. Electronic-1st | Incremental Charge - Manual Svc Order vs. Electronic-Add'l | Incremental Charge - Manual Svc Order vs. Electronic-Disc 1st | Incremental Charge - Manual Svc Order vs. Electronic-Disc Add'l |
|---|---|---|---|---|---|---|---|---|---|---|---|---|---|---|---|---|
| | | | | | | Rec | Nonrecurring | | Nonrecurring Disconnect | | OSS Rates($) | | | | | |
| | | | | | | | First | Add'l | First | Add'l | SOMEC | SOMAN | SOMAN | SOMAN | SOMAN | SOMAN |
| | Additional 4-Wire Analog Voice Grade Loop in same DS1 Interoffice Transport Combination - Zone 3 | | 3 | UNCVX | UEAL4 | 43.38 | 132.38 | 94.83 | 59.35 | 14.61 | | | | | | |
| | Each Additional DS1 Interoffice Channel per mile in same 3/1 Channel System per month | | | UNC1X | 1L5XX | 0.27 | | | | | | | | | | |
| | Each Additional DS1 Interoffice Channel Facility Termination in same 3/1 Channel System per month | | | UNC1X | U1TF1 | 61.71 | 89.47 | 81.99 | 16.39 | 14.48 | | | | | | |
| | Additional Voice Grade COCI - in combination - per month | | | UNCVX | 1D1VG | 0.56 | 6.59 | 4.73 | 0.00 | 0.00 | | | | | | |
| | Wholesale to UNE, Switch-As-Is Charge | | | UNC1X | UNCCC | | 5.61 | 5.61 | 7.00 | 7.00 | | | | | | |
| | **EXTENDED 4-WIRE 56 KBPS DIGITAL LOOP WITH DEDICATED DS1 INTEROFFICE TRANSPORT w/ 3/1 MUX** | | | | | | | | | | | | | | | |
| | First 4-Wire 56Kbps Digital Grade Local Loop in Combination - Zone 1 | | 1 | UNCDX | UDL56 | 29.93 | 126.66 | 89.12 | 59.35 | 14.61 | | | | | | |
| | First 4-Wire 56Kbps Digital Grade Local Loop in Combination - Zone 2 | | 2 | UNCDX | UDL56 | 33.99 | 126.66 | 89.12 | 59.35 | 14.61 | | | | | | |
| | First 4-Wire 56Kbps Digital Grade Local Loop in Combination - Zone 3 | | 3 | UNCDX | UDL56 | 34.74 | 126.66 | 89.12 | 59.35 | 14.61 | | | | | | |
| | First Interoffice Transport - Dedicated - DS1 combination - Per Mile Per Month | | | UNC1X | 1L5XX | 0.27 | | | | | | | | | | |
| | First Interoffice Transport - Dedicated - DS1 - combination Facility Termination Per Month | | | UNC1X | U1TF1 | 61.71 | 89.47 | 81.99 | 16.39 | 14.48 | | | | | | |
| | Per each 1/0 Channel System in combination Per Month | | | UNC1X | MQ1 | 107.57 | 91.24 | 62.71 | 10.56 | 9.81 | | | | | | |
| | Per each OCU-DP COCI (data) COCI per month (2.4-64kbs) | | | UNCDX | 1D1DD | 1.19 | 6.59 | 4.73 | 0.00 | 0.00 | | | | | | |
| | 3/1 Channel System in combination per month | | | UNC3X | MQ3 | 144.02 | 178.54 | 94.18 | 33.33 | 31.90 | | | | | | |
| | Per each DS1 COCI in combination per month | | | UNC1X | UC1D1 | 8.64 | 6.59 | 4.73 | 0.00 | 0.00 | | | | | | |
| | Additional 4-Wire 56Kbps Digital Grade Loop in same DS1 Interoffice Transport Combination - Zone 1 | | 1 | UNCDX | UDL56 | 29.93 | 126.66 | 89.12 | 59.35 | 14.61 | | | | | | |
| | Additional 4-Wire 56Kbps Digital Grade Loop in same DS1 Interoffice Transport Combination - Zone 2 | | 2 | UNCDX | UDL56 | 33.99 | 126.66 | 89.12 | 59.35 | 14.61 | | | | | | |
| | Additional 4-Wire 56Kbps Digital Grade Loop in same DS1 Interoffice Transport Combination - Zone 3 | | 3 | UNCDX | UDL56 | 34.74 | 126.66 | 89.12 | 59.35 | 14.61 | | | | | | |
| | OCU-DP COCI (data) COCI in combination per month (2.4-64kbs) | | | UNCDX | 1D1DD | 1.19 | 6.59 | 4.73 | 0.00 | 0.00 | | | | | | |
| | Each Additional DS1 Interoffice Channel per mile in same 3/1 Channel System per month | | | UNC1X | 1L5XX | 0.27 | | | | | | | | | | |
| | Each Additional DS1 Interoffice Channel Facility Termination in same 3/1 Channel System per month | | | UNC1X | U1TF1 | 61.71 | 89.47 | 81.99 | 16.39 | 14.48 | | | | | | |
| | Each Additional DS1 COCI in the same 3/1 channel system combination per month | | | UNC1X | UC1D1 | 8.64 | 6.59 | 4.73 | 0.00 | 0.00 | | | | | | |
| | Wholesale to UNE, Switch-As-Is Charge | | | UNC1X | UNCCC | | 5.61 | 5.61 | 7.00 | 7.00 | | | | | | |
| | **EXTENDED 4-WIRE 64 KBPS DIGITAL LOOP WITH DEDICATED DS1 INTEROFFICE TRANSPORT w/ 3/1 MUX** | | | | | | | | | | | | | | | |
| | First 4-Wire 64Kbps Digital Grade Loop in a DS1 Interoffice Transport Combination - Zone 1 | | 1 | UNCDX | UDL64 | 29.93 | 126.66 | 89.12 | 59.35 | 14.61 | | | | | | |
| | First 4-Wire 64Kbps Digital Grade Loop in a DS1 Interoffice Transport Combination - Zone 2 | | 2 | UNCDX | UDL64 | 33.99 | 126.66 | 89.12 | 59.35 | 14.61 | | | | | | |
| | First 4-Wire 64Kbps Digital Grade Loop in a DS1 Interoffice Transport Combination - Zone 3 | | 3 | UNCDX | UDL64 | 34.74 | 126.66 | 89.12 | 59.35 | 14.61 | | | | | | |
| | First Interoffice Transport - Dedicated - DS1 combination - Per Mile Per Month | | | UNC1X | 1L5XX | 0.27 | | | | | | | | | | |
| | First Interoffice Transport - Dedicated - DS1 combination - Facility Termination Per Month | | | UNC1X | U1TF1 | 61.71 | 89.47 | 81.99 | 16.39 | 14.48 | | | | | | |
| | Per each Channel System 1/0 in combination Per Month | | | UNC1X | MQ1 | 107.57 | 91.24 | 62.71 | 10.56 | 9.81 | | | | | | |
| | Per each OCU-DP COCI (data) in combination - per month (2.4-64kbs) | | | UNCDX | 1D1DD | 1.19 | 6.59 | 4.73 | 0.00 | 0.00 | | | | | | |
| | 3/1 Channel System in combination per month | | | UNC3X | MQ3 | 144.02 | 178.54 | 94.18 | 33.33 | 31.90 | | | | | | |
| | Per each DS1 COCI in combination per month | | | UNC1X | UC1D1 | 8.64 | 6.59 | 4.73 | 0.00 | 0.00 | | | | | | |
| | Additional 4-Wire 64Kbps Digital Grade Loop in same DS1 Interoffice Transport Combination - Zone 1 | | 1 | UNCDX | UDL64 | 29.93 | 126.66 | 89.12 | 59.35 | 14.61 | | | | | | |
| | Additional 4-Wire 64Kbps Digital Grade Loop in same DS1 Interoffice Transport Combination - Zone 2 | | 2 | UNCDX | UDL64 | 33.99 | 126.66 | 89.12 | 59.35 | 14.61 | | | | | | |

| CATEGORY | | RATE ELEMENTS | Interim | Zone | BCS | USOC | RATES($) | | | | | Svc Order Submitted Elec per LSR | Svc Order Submitted Manually per LSR | Incremental Charge - Manual Svc Order vs. Electronic-1st | Incremental Charge - Manual Svc Order vs. Electronic-Add'l | Incremental Charge - Manual Svc Order vs. Electronic-Disc 1st | Incremental Charge - Manual Svc Order vs. Electronic-Disc Add'l |
|---|---|---|---|---|---|---|---|---|---|---|---|---|---|---|---|---|---|
| | | | | | | | Rec | Nonrecurring | | Nonrecurring Disconnect | | OSS Rates($) | | | | | |
| | | | | | | | | First | Add'l | First | Add'l | SOMEC | SOMAN | SOMAN | SOMAN | SOMAN | SOMAN |
| | | Additional 4-Wire 64Kbps Digital Grade Loop in same DS1 Interoffice Transport Combination - Zone 3 | | 3 | UNCDX | UDL64 | 34.74 | 126.66 | 89.12 | 59.35 | 14.61 | | | | | | |
| | | Additional OCU-DP COCI (data) - DS1 to DS0 Channel System combination - per month (2.4-64kbs) | | | UNCDX | 1D1DD | 1.19 | 6.59 | 4.73 | 0.00 | 0.00 | | | | | | |
| | | Each Additional DS1 Interoffice Channel per mile in same 3/1 Channel System per month | | | UNC1X | 1L5XX | 0.27 | | | | | | | | | | |
| | | Each Additional DS1 Interoffice Channel Facility Termination in same 3/1 Channel System per month | | | UNC1X | U1TF1 | 61.71 | 89.47 | 81.99 | 16.39 | 14.48 | | | | | | |
| | | Each Additional DS1 COCI in the same 3/1 channel system combination per month | | | UNC1X | UC1D1 | 8.64 | 6.59 | 4.73 | 0.00 | 0.00 | | | | | | |
| | | Wholesale to UNE, Switch-As-Is Charge | | | UNC1X | UNCCC | | 5.61 | 5.61 | 7.00 | 7.00 | | | | | | |
| | | First 2-Wire ISDN Loop in a DS1 Interoffice Combination Transport - Zone 1 | | 1 | UNCNX | U1L2X | 25.21 | 117.58 | 80.03 | 53.05 | 10.61 | | | | | | |
| | | First 2-Wire ISDN Loop in a DS1 Interoffice Combination Transport - Zone 2 | | 2 | UNCNX | U1L2X | 32.76 | 117.58 | 80.03 | 53.05 | 10.61 | | | | | | |
| | | First 2-Wire ISDN Loop in a DS1 Interoffice Combination Transport - Zone 3 | | 3 | UNCNX | U1L2X | 37.70 | 117.58 | 80.03 | 53.05 | 10.61 | | | | | | |
| | | First Interoffice Transport - Dedicated - DS1 combination - Per Mile per month | | | UNC1X | 1L5XX | 0.27 | | | | | | | | | | |
| | | First Interoffice Transport - Dedicated - DS1 combination - Facility Termination per month | | | UNC1X | U1TF1 | 61.71 | 89.47 | 81.99 | 16.39 | 14.48 | | | | | | |
| | | Per each Channel System 1/0 in combination - per month | | | UNC1X | MQ1 | 107.57 | 91.24 | 62.71 | 10.56 | 9.81 | | | | | | |
| | | Per each 2-wire ISDN COCI (BRITE) in combination - per month | | | UNCNX | UC1CA | 2.56 | 6.59 | 4.73 | 0.00 | 0.00 | | | | | | |
| | | 3/1 Channel System in combination per month | | | UNC3X | MQ3 | 144.02 | 178.54 | 94.18 | 33.33 | 31.90 | | | | | | |
| | | Per each DS1 COCI in combination per month | | | UNC1X | UC1D1 | 8.64 | 6.59 | 4.73 | 0.00 | 0.00 | | | | | | |
| | | Additional 2-wire ISDN Loop in same DS1Interoffice Transport Combination - Zone 1 | | 1 | UNCNX | U1L2X | 25.21 | 117.58 | 80.03 | 53.05 | 10.61 | | | | | | |
| | | Additional 2-wire ISDN Loop in same DS1Interoffice Transport Combination - Zone 2 | | 2 | UNCNX | U1L2X | 32.76 | 117.58 | 80.03 | 53.05 | 10.61 | | | | | | |
| | | Additional 2-wire ISDN Loop in same DS1Interoffice Transport Combination - Zone 3 | | 3 | UNCNX | U1L2X | 37.70 | 117.58 | 80.03 | 53.05 | 10.61 | | | | | | |
| | | Additional 2-wire ISDN COCI (BRITE) in same 1/0 channel system combination- per month | | | UNCNX | UC1CA | 2.56 | 6.59 | 4.73 | 0.00 | 0.00 | | | | | | |
| | | Each Additional DS1 Interoffice Channel per mile in same 3/1 Channel System per month | | | UNC1X | 1L5XX | 0.27 | | | | | | | | | | |
| | | Each Additional DS1 Interoffice Channel Facility Termination in same 3/1 Channel System per month | | | UNC1X | U1TF1 | 61.71 | 89.47 | 81.99 | 16.39 | 14.48 | | | | | | |
| | | Each Additional DS1 COCI in the same 3/1 channel system combination per month | | | UNC1X | UC1D1 | 8.64 | 6.59 | 4.73 | 0.00 | 0.00 | | | | | | |
| | | Wholesale to UNE, Switch-As-Is Charge | | | UNC1X | UNCCC | | 5.61 | 5.61 | 7.00 | 7.00 | | | | | | |
| | **EXTENDED 4-WIRE DS1 LOOP WITH DEDICATED DS1 INTEROFFICE TRANSPORT w/ 3/1 MUX** | | | | | | | | | | | | | | | | |
| | | First 4-wire DS1 Digital Lcoal Loop in Combination - Zone 1 | | 1 | UNC1X | USLXX | 90.87 | 253.03 | 157.89 | 44.80 | 11.73 | | | | | | |
| | | First 4-wire DS1 Digital Lcoal Loop in Combination - Zone 2 | | 2 | UNC1X | USLXX | 155.43 | 253.03 | 157.89 | 44.80 | 11.73 | | | | | | |
| | | First 4-wire DS1 Digital Lcoal Loop in Combination - Zone 3 | | 3 | UNC1X | USLXX | 261.89 | 253.03 | 157.89 | 44.80 | 11.73 | | | | | | |
| | | First Interoffice Transport - Dedicated - DS1 combination - Per Mile Per Month | | | UNC1X | 1L5XX | 0.27 | | | | | | | | | | |
| | | First Interoffice Transport - Dedicated - DS1 combination - Facility Termination Per Month | | | UNC1X | U1TF1 | 61.71 | 89.47 | 81.99 | 16.39 | 14.48 | | | | | | |
| | | 3/1 Channel System in combination per month | | | UNC3X | MQ3 | 144.02 | 178.54 | 94.18 | 33.33 | 31.90 | | | | | | |
| | | Per each DS1 COCI combination per month | | | UNC1X | UC1D1 | 8.64 | 6.59 | 4.73 | 0.00 | 0.00 | | | | | | |
| | | Each Additional DS1 Interoffice Channel per mile in same 3/1 Channel System per month | | | UNC1X | 1L5XX | 0.27 | | | | | | | | | | |
| | | Each Additional DS1 Interoffice Channel Facility Termination in same 3/1 Channel System per month | | | UNC1X | U1TF1 | 61.71 | 89.47 | 81.99 | 16.39 | 14.48 | | | | | | |
| | | Each Additional DS1 COCI in the same 3/1 channel system combination per month | | | UNC1X | UC1D1 | 8.64 | 6.59 | 4.73 | 0.00 | 0.00 | | | | | | |
| | | Additional 4-Wire DS1 Digital Local Loop in Combination - Zone 1 | | 1 | UNC1X | USLXX | 90.87 | 253.03 | 157.89 | 44.80 | 11.73 | | | | | | |

| UNBUNDLED NETWORK ELEMENTS - South Carolina | | | | | | | | | | | | | | Attachment: 2 Exh. A | | | |
|---|---|---|---|---|---|---|---|---|---|---|---|---|---|---|---|---|---|
| CATEGORY | | RATE ELEMENTS | Interim | Zone | BCS | USOC | RATES($) | | | | | Svc Order Submitted Elec per LSR | Svc Order Submitted Manually per LSR | Incremental Charge - Manual Svc Order vs. Electronic-1st | Incremental Charge - Manual Svc Order vs. Electronic-Add'l | Incremental Charge - Manual Svc Order vs. Electronic-Disc 1st | Incremental Charge - Manual Svc Order vs. Electronic-Disc Add'l |
| | | | | | | | Rec | Nonrecurring | | Nonrecurring Disconnect | | OSS Rates($) | | | | | |
| | | | | | | | | First | Add'l | First | Add'l | SOMEC | SOMAN | SOMAN | SOMAN | SOMAN | SOMAN |
| | | Additional 4-Wire DS1 Digital Local Loop in Combination - Zone 2 | | 2 | UNC1X | USLXX | 155.43 | 253.03 | 157.89 | 44.80 | 11.73 | | | | | | |
| | | Additional 4-Wire DS1 Digital Local Loop in Combination - Zone 3 | | 3 | UNC1X | USLXX | 261.89 | 253.03 | 157.89 | 44.80 | 11.73 | | | | | | |
| | | Wholesale to UNE, Switch-As-Is Charge | | | UNC1X | UNCCC | | 5.61 | 5.61 | 7.00 | 7.00 | | | | | | |
| | **EXTENDED 4-WIRE 56 KBPS DIGITAL EXTENDED LOOP WITH DS0 INTEROFFICE TRANSPORT** | | | | | | | | | | | | | | | | |
| | | First 4-wire 56 kbps Local Loop in combination - Zone 1 | | 1 | UNCDX | UDL56 | 29.93 | 126.66 | 89.12 | 59.35 | 14.61 | | | | | | |
| | | First 4-wire 56 kbps Local Loop in combination - Zone 2 | | 2 | UNCDX | UDL56 | 33.99 | 126.66 | 89.12 | 59.35 | 14.61 | | | | | | |
| | | First 4-wire 56 kbps Local Loop in combination - Zone 3 | | 3 | UNCDX | UDL56 | 34.74 | 126.66 | 89.12 | 59.35 | 14.61 | | | | | | |
| | | First 4-wiree 56 kbps Interoffice Transport - Dedicated - Per Mile per month | | | UNCDX | 1L5XX | 0.0134 | | | | | | | | | | |
| | | First 4-wire 56 kbps Interoffice Transport - Dedicated - Facility Termination per month | | | UNCDX | U1TD5 | 13.41 | 40.63 | 27.47 | 16.77 | 6.91 | | | | | | |
| | | Wholesale to UNE, Switch-As-Is Charge | | | UNCDX | UNCCC | | 5.61 | 5.61 | 7.00 | 7.00 | | | | | | |
| | **EXTENDED 4-WIRE 64 KBPS DIGITAL EXTENDED LOOP WITH DS0 INTEROFFICE TRANSPORT** | | | | | | | | | | | | | | | | |
| | | First 4-wire 64 kbps Local Loop in combination - Zone 1 | | 1 | UNCDX | UDL64 | 29.93 | 126.66 | 89.12 | 59.35 | 14.61 | | | | | | |
| | | First 4-wire 64 kbps Local Loop in combination - Zone 2 | | 2 | UNCDX | UDL64 | 33.99 | 126.66 | 89.12 | 59.35 | 14.61 | | | | | | |
| | | First 4-wire 64 kbps Local Loop in combination - Zone 3 | | 3 | UNCDX | UDL64 | 34.74 | 126.66 | 89.12 | 59.35 | 14.61 | | | | | | |
| | | First l4-wire 65 kbps Interoffice Transport - Dedicated - Per Mile per month | | | UNCDX | 1L5XX | 0.0134 | | | | | | | | | | |
| | | First 4-wire 64 kbps Interoffice Transport - Dedicated - Facility Termination per month | | | UNCDX | U1TD6 | 13.41 | 40.63 | 27.47 | 16.77 | 6.91 | | | | | | |
| | | Wholesale to UNE, Switch-As-Is Charge | | | UNCDX | UNCCC | | 5.61 | 5.61 | 7.00 | 7.00 | | | | | | |
| **ADDITIONAL NETWORK ELEMENTS** | | | | | | | | | | | | | | | | | |
| | **When used as a part of a currently combined facility, the non-recurrng charges do not apply, but a Switch As Is charge does apply.** | | | | | | | | | | | | | | | | |
| | **When used as ordinarily combined network elements in All States, the non-recurring charges apply and the Switch As Is Charge does not.** | | | | | | | | | | | | | | | | |
| | **Nonrecurring Currently Combined Network Elements "Switch As Is" Charge** | | | | | | | | | | | | | | | | |
| | | Wholesale to UNE, Switch-As-Is Conversion Charge, 2/4-wire VG | | | UNCVX | UNCCC | | 5.61 | 5.61 | 7.00 | 7.00 | | | | | | |
| | | Wholesale to UNE, Switch-As-Is Conversion Charge, 4-wire VG | | | UNCDX | UNCCC | | 5.61 | 5.61 | 7.00 | 7.00 | | | | | | |
| | | Wholesale to UNE, Switch-As-Is Conversion Charge, DS1 | | | UNC1X | UNCCC | | 5.61 | 5.61 | 7.00 | 7.00 | | | | | | |
| | | Wholesale to UNE, Switch-As-Is Conversion Charge, DS3 | | | UNC3X | UNCCC | | 5.61 | 5.61 | 7.00 | 7.00 | | | | | | |
| | | Wholesale to UNE, Switch-As-Is Conversion Charge, STS-1 | | | UNCSX | UNCCC | | 5.61 | 5.61 | 7.00 | 7.00 | | | | | | |
| | **Optional Features & Functions:** | | | | | | | | | | | | | | | | |
| | | | I | | U1TD1, ULDD1,UNC1X | CCOEF | | 0.00 | 0.00 | 0.00 | 0.00 | | | | | | |
| | | Clear Channel Capability Super FrameOption - per DS1 | I | | U1TD1, ULDD1,UNC1X | CCOSF | | 0.00 | 0.00 | 0.00 | 0.00 | | | | | | |
| | | Clear Channel Capability (SF/ESF) Option - Subsequent Activity - per DS1 | I | | ULDD1, U1TD1, UNC1X, USL | NRCCC | | 185.26 | 23.86 | 1.99 | 0.78 | | | | | | |
| | | C-bit Parity Option - Subsequent Activity - per DS3 | i | | U1TD3, ULDD3, UE3, UNC3X | NRCC3 | | 219.58 | 7.69 | 0.737 | 0.00 | | | | | | |
| | **MULTIPLEXER Interfaces** | | | | | | | | | | | | | | | | |
| | | DS1 to DS0 Channel System per month | | | UNC1X | MQ1 | 107.57 | 91.24 | 62.71 | 10.56 | 9.81 | | | | | | |
| | | Wholesale to UNE, Switch-As-Is Conversion Charge, 1/0 Channel System | | | UNC1X | UNCCC | | 5.61 | 5.61 | 7.00 | 7.00 | | | | | | |
| | | OCU-DP COCI (data) - DS1 to DS0 Channel System - per month (2.4-64kbs) used for a Local Loop | | | UDL | 1D1DD | 1.19 | 6.59 | 4.73 | | | | | | | | |
| | | OCU-DP COCI (data) - DS1 to DS0 Channel System - per month (2.4-64kbs) used for connection to a channelized DS1 Local Channel in the same SWC as collocation | | | U1TUD | 1D1DD | 1.19 | 6.59 | 4.73 | | | | | | | | |
| | | 2-wire ISDN COCI (BRITE) - DS1 to DS0 Channel System - per month for a Local Loop | | | UDN | UC1CA | 2.56 | 6.59 | 4.73 | | | | | | | | |
| | | 2-wire ISDN COCI (BRITE) - DS1 to DS0 Channel System - per month used for connection to a channelized DS1 Local Channel in the same SWC as collocation | | | U1TUB | UC1CA | 2.56 | 6.59 | 4.73 | | | | | | | | |
| | | Voice Grade COCI - DS1 to DS0 Channel System - per month used for a Local Loop | | | UEA | 1D1VG | 0.56 | 6.59 | 4.73 | | | | | | | | |

| UNBUNDLED NETWORK ELEMENTS - South Carolina | | | | | | | | | | | | | | Attachment: 2 Exh. A | | | |
|---|---|---|---|---|---|---|---|---|---|---|---|---|---|---|---|---|---|
| CATEGORY | | RATE ELEMENTS | Interim | Zone | BCS | USOC | RATES($) | | | | | Svc Order Submitted Elec per LSR | Svc Order Submitted Manually per LSR | Incremental Charge - Manual Svc Order vs. Electronic-1st | Incremental Charge - Manual Svc Order vs. Electronic-Add'l | Incremental Charge - Manual Svc Order vs. Electronic-Disc 1st | Incremental Charge - Manual Svc Order vs. Electronic-Disc Add'l |
| | | | | | | | Rec | Nonrecurring | | Nonrecurring Disconnect | | OSS Rates($) | | | | | |
| | | | | | | | | First | Add'l | First | Add'l | SOMEC | SOMAN | SOMAN | SOMAN | SOMAN | SOMAN |
| | | Voice Grade COCI - DS1 to DS0 Channel System - per month used for connection to a channelized DS1 Local Channel in the same SWC as collocation | | | U1TUC | 1D1VG | 0.56 | 6.59 | 4.73 | | | | | | | | |
| | | DS3 to DS1 Channel System per month | | | UNC3X | MQ3 | 144.02 | 178.54 | 94.18 | 33.33 | 31.90 | | | | | | |
| | | Wholesale to UNE, Switch-As-Is Conversion Charge, 3/1 Channel System | | | UNC3X | UNCCC | | 5.61 | 5.61 | 7.00 | 7.00 | | | | | | |
| | | STS-1 to DS1 Channel System per month | | | UNCSX | MQ3 | 144.02 | 178.54 | 94.18 | 33.33 | 31.90 | | | | | | |
| | | Wholesale to UNE, Switch-As-Is Conversion Charge, 3/1 Channel System | | | UNCSX | UNCCC | | 5.61 | 5.61 | 7.00 | 7.00 | | | | | | |
| | | DS1 COCI used with Loop per month | | | USL | UC1D1 | 8.64 | 6.59 | 4.73 | | | | | | | | |
| | | DS1 COCI (used for connection to a channelized DS1 Local Channel in the same SWC as collocation) per month | | | U1TUA | UC1D1 | 8.64 | 6.59 | 4.73 | | | | | | | | |
| | | DS1 COCI used with Interoffice Channel per month | | | U1TD1 | UC1D1 | 8.64 | 6.59 | 4.73 | | | | | | | | |
| | | DS3 Interface Unit (DS1 COCI) used with Local Channel per month | | | ULDD1 | UC1D1 | 8.64 | 6.59 | 4.73 | | | | | | | | |
| | **Access to DCS - Customer Reconfiguration (FlexServ)** | | | | | | | | | | | | | | | | |
| | | Customer Reconfiguration Establishment | | | | | | 1.48 | | 1.85 | | | | | | | |
| | | DS1 DSC Termination with DS0 Switching | | | | | 27.96 | 25.60 | 19.70 | 16.67 | 13.41 | | | | | | |
| | | DS1 DSC Termination with DS1 Switching | | | | | 12.67 | 18.51 | 12.61 | 12.24 | 8.98 | | | | | | |
| | | DS3 DSC Termination with DS1 Switching | | | | | 176.51 | 25.60 | 19.70 | 16.67 | 13.41 | | | | | | |
| | **Service Rearrangements** | | | | | | | | | | | | | | | | |
| | | NRC - Change in Facility Assignment per circuit Service Rearrangement | I | | U1TVX, U1TDX, UEA, UDL, U1TUC, U1TUD, U1TUB, ULDVX, ULDDX, UNCVX, UNCDX | URETD | | 269.90 | 47.10 | | | | | | | | |
| | | NRC - Change in Facility Assignment per circuit Project Management (added to CFA per circuit if project managed) | I | | U1TVX, U1TDX, UEA, UDL, U1TUC, U1TUD, U1TUB, ULDVX, ULDDX, UNCVX, UNCDX | URETB | | 1.28 | 1.28 | | | | | | | | |
| | **Miscellaneous** | | | | | | | | | | | | | | | | |
| | | NRC - Order Coordination Specific Time - Dedicated Transport | I | | UNC1X | OCOSR | | 18.90 | 18.90 | | | | | | | | |

| CATEGORY | RATE ELEMENTS | Interim | Zone | BCS | USOC | RATES($) Rec | Nonrecurring First | Nonrecurring Add'l | Nonrecurring Disconnect First | Nonrecurring Disconnect Add'l | Svc Order Submitted Elec per LSR | Svc Order Submitted Manually per LSR | Incremental Charge - Manual Svc Order vs. Electronic-1st | Incremental Charge - Manual Svc Order vs. Electronic-Add'l | Incremental Charge - Manual Svc Order vs. Electronic-Disc 1st | Incremental Charge - Manual Svc Order vs. Electronic-Disc Add'l |
|---|---|---|---|---|---|---|---|---|---|---|---|---|---|---|---|---|
| | | | | | | | | | | | OSS Rates($) | | | | | |
| | | | | | | | First | Add'l | First | Add'l | SOMEC | SOMAN | SOMAN | SOMAN | SOMAN | SOMAN |
| | **The "Zone" shown in the sections for stand-alone loops or loops as part of a combination refers to Geographically Deaveraged UNE Zones. To view Geographically Deaveraged UNE Zone Designations by Central Office, refer to internet Website: http://www.interconnection.bellsouth.com/become_a_clec/html/interconnection.htm** | | | | | | | | | | | | | | | |
| **OPERATIONS SUPPORT SYSTEMS (OSS) - "STATE SPECIFIC RATES"** | | | | | | | | | | | | | | | | |
| | NOTE: (1) CLEC should contact its contract negotiator if it prefers the "regional" OSS charges as offered by BellSouth. The OSS charges currently contained in this rate exhibit are the PSC state ordered "state specificl" service ordering charges. CLEC may elect either the state specific Commission ordered rates for the service ordering charges, or CLEC may elect the regional service ordering charge, however, CLEC can not obtain a mixture of the two regardless if CLEC has a interconnection contract established in each of the 9 states. | | | | | | | | | | | | | | | |
| | NOTE: (2) Any element that can be ordered electronically will be billed according to the SOMEC rate listed in this category. Please refer to BellSouth's Local Ordering Handbook (LOH) to determine if a product can be ordered electronically. For those elements that cannot be ordered electronically at present per the LOH, the listed SOMEC rate in this category reflects the charge that would be billed to a CLEC once electronic ordering capabilities come on-line for that element. Otherwise, the manual ordering charge, SOMAN, will be applied to a CLECs bill when it submits an LSR to BellSouth. | | | | | | | | | | | | | | | |
| | NOTE: (3) OSS - Manual Service Order Charge, Per Element - UNE Only **Please see applicable rate element for OSS charge | | | | | | | | | | | | | | | |
| | NOTE: (4) The actual state specific electronic OSS rate ordered by the Tennessee Regulatory Authority is $0.00. Recovery of OSS interfaces is built into the recurring charges of the elements ordered. | | | | | | | | | | | | | | | |
| | OSS - Electronic Service Order Charge, Per Local Service Request (LSR) - UNE Only | | | | SOMEC | | 0.00 | 0.00 | 0.00 | 0.00 | | | | | | |
| | OSS - Manual Service Order Charge, Per Element - UNE Only **Please see applicable rate element for OSS charge | | | | SOMAN | | | | | | | | | | | |
| **UNE SERVICE DATE ADVANCEMENT CHARGE** | | | | | | | | | | | | | | | | |
| | **NOTE: The Expedite charge will be maintained commensurate with BellSouth's FCC No.1 Tariff, Section 5 as applicable.** | | | | | | | | | | | | | | | |
| | UNE Expedite Charge per Circuit or Line Assignable USOC, per Day | | | UAL, UEANL, UCL, UEF, UDF, UEQ, UDL, UENTW, UDN, UEA, UHL, ULC, USL, U1T12, U1T48, U1TD1, U1TD3, U1TDX, U1TO3, U1TS1, U1TVX, UC1BC, UC1BL, UC1CC, UC1CL, UC1DC, UC1DL, UC1EC, UC1EL, UC1FC, UC1FL, UC1GC, UC1GL, UC1HC, UC1HL, UDL12, UDL48, UDLO3, UDLSX, UE3, ULD12, ULD48, ULDD1, ULDD3, ULDDX, ULDO3, ULDS1, ULDVX, UNC1X, UNC3X, UNCDX, UNCNX, UNCSX, UNCVX, UNLD1, UNLD3, UXTD1, UXTD3, UXTS1, U1TUC, U1TUD, U1TUB, U1TUA,NTCVG, NTCUD, NTCD1 | SDASP | | 200.00 | 200.00 | | | | | | | | |
| **ORDER MODIFICATION CHARGE** | | | | | | | | | | | | | | | | |
| | Order Modification Charge (OMC) | | | | | | 26.21 | 0.00 | 0.00 | 0.00 | | | | | | |
| | Order Modification Additional Dispatch Charge (OMCAD) | | | | | | 150.00 | 0.00 | 0.00 | 0.00 | | | | | | |
| **UNBUNDLED EXCHANGE ACCESS LOOP** | | | | | | | | | | | | | | | | |
| | **2-WIRE ANALOG VOICE GRADE LOOP** | | | | | | | | | | | | | | | |
| | 2-Wire Analog Voice Grade Loop - Service Level 1- Zone 1 | | 1 | UEANL | UEAL2 | 11.74 | 31.99 | 20.02 | 10.65 | 1.41 | | | 20.35 | 10.54 | 13.32 | 13.32 |
| | 2-Wire Analog Voice Grade Loop - Service Level 1- Zone 2 | | 2 | UEANL | UEAL2 | 17.59 | 31.99 | 20.02 | 10.65 | 1.41 | | | 20.35 | 10.54 | 13.32 | 13.32 |
| | 2-Wire Analog Voice Grade Loop - Service Level 1- Zone 3 | | 3 | UEANL | UEAL2 | 29.37 | 31.99 | 20.02 | 10.65 | 1.41 | | | 20.35 | 10.54 | 13.32 | 13.32 |
| | 2-Wire Analog Voice Grade Loop - Service Level 1- Zone 1 | | 1 | UEANL | UEASL | 11.74 | 31.99 | 20.02 | 10.65 | 1.41 | | | 20.35 | 10.54 | 13.32 | 13.32 |
| | 2-Wire Analog Voice Grade Loop - Service Level 1- Zone 2 | | 2 | UEANL | UEASL | 17.59 | 31.99 | 20.02 | 10.65 | 1.41 | | | 20.35 | 10.54 | 13.32 | 13.32 |
| | 2-Wire Analog Voice Grade Loop - Service Level 1- Zone 3 | | 3 | UEANL | UEASL | 29.37 | 31.99 | 20.02 | 10.65 | 1.41 | | | 20.35 | 10.54 | 13.32 | 13.32 |

| CATEGORY | RATE ELEMENTS | Interim | Zone | BCS | USOC | RATES($) | | | | | Svc Order Submitted Elec per LSR | Svc Order Submitted Manually per LSR | Incremental Charge - Manual Svc Order vs. Electronic-1st | Incremental Charge - Manual Svc Order vs. Electronic-Add'l | Incremental Charge - Manual Svc Order vs. Electronic-Disc 1st | Incremental Charge - Manual Svc Order vs. Electronic-Disc Add'l |
|---|---|---|---|---|---|---|---|---|---|---|---|---|---|---|---|---|
| | | | | | | Rec | Nonrecurring | | Nonrecurring Disconnect | | OSS Rates($) | | | | | |
| | | | | | | | First | Add'l | First | Add'l | SOMEC | SOMAN | SOMAN | SOMAN | SOMAN | SOMAN |
| | Unbundled Miscellaneous Rate Element, Tag Loop at End User Premise | | | UEANL | URETL | | 8.95 | 0.88 | | | | | | | | |
| | Loop Testing - Basic 1st Half Hour | | | UEANL | URET1 | | 57.67 | 0.00 | | | | | | | | |
| | Loop Testing - Basic Additional Half Hour | | | UEANL | URETA | | 37.44 | 37.44 | | | | | | | | |
| | CLEC to CLEC Conversion Charge Without Outside Dispatch (UVL-SL1) | | | UEANL | UREWO | | 15.80 | 8.95 | | | | | 20.35 | 10.54 | 13.32 | 13.32 |
| | Unbundled Voice Loop, Non-Design Voice Loop, billing for BST providing make-up (Engineering Information - E.I.) | | | UEANL | UEANM | | 25.33 | 25.33 | | | | | | | | |
| | Manual Order Coordination for UVL-SL1s (per loop) | | | UEANL | UEAMC | | 36.52 | 36.52 | | | | | | | | |
| **2-WIRE Unbundled COPPER LOOP** | | | | | | | | | | | | | | | | |
| | 2-Wire Unbundled Copper Loop - Non-Designed Zone 1 | | 1 | UEQ | UEQ2X | 11.74 | 31.99 | 20.02 | 10.65 | 1.41 | | | 20.35 | 10.54 | 13.32 | 13.32 |
| | 2 Wire Unbundled Copper Loop - Non-Designed - Zone 2 | | 2 | UEQ | UEQ2X | 17.59 | 31.99 | 20.02 | 10.65 | 1.41 | | | 20.35 | 10.54 | 13.32 | 13.32 |
| | 2 Wire Unbundled Copper Loop - Non-Designed - Zone 3 | | 3 | UEQ | UEQ2X | 29.37 | 31.99 | 20.02 | 10.65 | 1.41 | | | 20.35 | 10.54 | 13.32 | 13.32 |
| | Unbundled Miscellaneous Rate Element, Tag Loop at End User Premise | | | UEQ | URETL | | 8.95 | 0.88 | | | | | | | | |
| | Manual Order Coordination 2 Wire Unbundled Copper Loop - Non-Designed (per loop) | | | UEQ | USBMC | | 36.52 | 36.52 | | | | | | | | |
| | Unbundled Copper Loop, Non-Design Copper Loop, billing for BST providing make-up (Engineering Information - E.I.) | | | UEQ | UEQMU | | 25.33 | 25.33 | | | | | 20.35 | 10.54 | 13.32 | 13.32 |
| | Loop Testing - Basic 1st Half Hour | | | UEQ | URET1 | | 57.67 | 0.00 | | | | | | | | |
| | Loop Testing - Basic Additional Half Hour | | | UEQ | URETA | | 37.44 | 37.44 | | | | | | | | |
| | CLEC to CLEC Conversion Charge Without Outside Dispatch (UCL-ND) | | | UEQ | UREWO | | 14.29 | 7.44 | | | | | 20.35 | 10.54 | 13.32 | 13.32 |
| **UNBUNDLED EXCHANGE ACCESS LOOP** | | | | | | | | | | | | | | | | |
| **2-WIRE ANALOG VOICE GRADE LOOP** | | | | | | | | | | | | | | | | |
| | 2-Wire Analog Voice Grade Loop - Service Level 2 w/Loop or Ground Start Signaling - Zone 1 | | 1 | UEA, NTCVG | UEAL2 | 14.74 | 75.06 | 48.20 | 28.70 | 17.64 | | | 20.35 | 10.54 | 13.32 | 13.32 |
| | 2-Wire Analog Voice Grade Loop - Service Level 2 w/Loop or Ground Start Signaling - Zone 2 | | 2 | UEA, NTCVG | UEAL2 | 22.08 | 75.06 | 48.20 | 28.70 | 17.64 | | | 20.35 | 10.54 | 13.32 | 13.32 |
| | 2-Wire Analog Voice Grade Loop - Service Level 2 w/Loop or Ground Start Signaling - Zone 3 | | 3 | UEA, NTCVG | UEAL2 | 36.87 | 75.06 | 48.20 | 28.70 | 17.64 | | | 20.35 | 10.54 | 13.32 | 13.32 |
| | 2-Wire Analog Voice Grade Loop - Service Level 2 w/Reverse Battery Signaling - Zone 1 | | 1 | UEA, NTCVG | UEAR2 | 14.74 | 75.06 | 48.20 | 28.70 | 17.64 | | | 20.35 | 10.54 | 13.32 | 13.32 |
| | 2-Wire Analog Voice Grade Loop - Service Level 2 w/Reverse Battery Signaling - Zone 2 | | 2 | UEA, NTCVG | UEAR2 | 22.08 | 75.06 | 48.20 | 28.70 | 17.64 | | | 20.35 | 10.54 | 13.32 | 13.32 |
| | 2-Wire Analog Voice Grade Loop - Service Level 2 w/Reverse Battery Signaling - Zone 3 | | 3 | UEA, NTCVG | UEAR2 | 36.87 | 75.06 | 48.20 | 28.70 | 17.64 | | | 20.35 | 10.54 | 13.32 | 13.32 |
| | Switch-As-Is Conversion rate per UNE Loop, Single LSR, (per DS0) | | | UEA, NTCVG | URESL | | 20.61 | 2.96 | | | | | 20.35 | 10.54 | 13.32 | 13.32 |
| | Switch-As-Is Conversion rate per UNE Loop, Spreadsheet, (per DS0) | | | UEA, NTCVG | URESP | | 21.94 | 4.29 | | | | | | | | |
| | CLEC to CLEC Conversion Charge without outside dispatch | | | UEA, NTCVG | UREWO | | 75.06 | 36.41 | | | | | 20.35 | 10.54 | 13.32 | 13.32 |
| | Loop Tagging - Service Level 2 (SL2) | | | UEA, NTCVG | URETL | | 11.23 | 1.10 | | | | | | | | |
| **4-WIRE ANALOG VOICE GRADE LOOP** | | | | | | | | | | | | | | | | |
| | 4-Wire Analog Voice Grade Loop - Zone 1 | | 1 | UEA, NTCVG | UEAL4 | 21.98 | 122.76 | 85.57 | 76.35 | 39.16 | | | 20.35 | 10.54 | 13.32 | 13.32 |
| | 4-Wire Analog Voice Grade Loop - Zone 2 | | 2 | UEA, NTCVG | UEAL4 | 32.93 | 122.76 | 85.57 | 76.35 | 39.16 | | | 20.35 | 10.54 | 13.32 | 13.32 |
| | 4-Wire Analog Voice Grade Loop - Zone 3 | | 3 | UEA, NTCVG | UEAL4 | 54.99 | 122.76 | 85.57 | 76.35 | 39.16 | | | 20.35 | 10.54 | 13.32 | 13.32 |
| | Switch-As-Is Conversion rate per UNE Loop, Single LSR, (per DS0) | | | UEA, NTCVG | URESL | | 20.61 | 2.96 | | | | | 20.35 | 10.54 | 13.32 | 13.32 |
| | Switch-As-Is Conversion rate per UNE Loop, Spreadsheet, (per DS0) | | | UEA, NTCVG | URESP | | 21.94 | 4.29 | | | | | | | | |
| | CLEC to CLEC Conversion Charge without outside dispatch | | | UEA, NTCVG | UREWO | | 75.06 | 36.41 | | | | | 20.35 | 10.54 | 13.32 | 13.32 |
| **2-WIRE ISDN DIGITAL GRADE LOOP** | | | | | | | | | | | | | | | | |
| | 2-Wire ISDN Digital Grade Loop - Zone 1 | | 1 | UDN | U1L2X | 19.77 | 142.76 | 88.88 | 76.35 | 39.16 | | | 20.35 | 10.54 | 13.32 | 13.32 |
| | 2-Wire ISDN Digital Grade Loop - Zone 2 | | 2 | UDN | U1L2X | 29.63 | 142.76 | 88.88 | 76.35 | 39.16 | | | 20.35 | 10.54 | 13.32 | 13.32 |
| | 2-Wire ISDN Digital Grade Loop - Zone 3 | | 3 | UDN | U1L2X | 49.47 | 142.76 | 88.88 | 76.35 | 39.16 | | | 20.35 | 10.54 | 13.32 | 13.32 |
| | CLEC to CLEC Conversion Charge without outside dispatch | | | UDN | UREWO | | 91.77 | 44.22 | | | | | 20.35 | 10.54 | 13.32 | 13.32 |
| **2-WIRE ASYMMETRICAL DIGITAL SUBSCRIBER LINE (ADSL) COMPATIBLE LOOP** | | | | | | | | | | | | | | | | |

| CATEGORY | RATE ELEMENTS | Interim | Zone | BCS | USOC | RATES($) | | | | | Svc Order Submitted Elec per LSR | Svc Order Submitted Manually per LSR | Incremental Charge - Manual Svc Order vs. Electronic-1st | Incremental Charge - Manual Svc Order vs. Electronic-Add'l | Incremental Charge - Manual Svc Order vs. Electronic-Disc 1st | Incremental Charge - Manual Svc Order vs. Electronic-Disc Add'l |
|---|---|---|---|---|---|---|---|---|---|---|---|---|---|---|---|---|
| | | | | | | Rec | Nonrecurring | | Nonrecurring Disconnect | | OSS Rates($) | | | | | |
| | | | | | | | First | Add'l | First | Add'l | SOMEC | SOMAN | SOMAN | SOMAN | SOMAN | SOMAN |
| | 2 Wire Unbundled ADSL Loop including manual service inquiry & facility reservation - Zone 1 | | 1 | UAL | UAL2X | 12.30 | 156.95 | 64.54 | 89.64 | 16.93 | | | 20.35 | 10.54 | 13.32 | 13.32 |
| | 2 Wire Unbundled ADSL Loop including manual service inquiry & facility reservation - Zone 2 | | 2 | UAL | UAL2X | 18.43 | 156.95 | 64.54 | 89.64 | 16.93 | | | 20.35 | 10.54 | 13.32 | 13.32 |
| | 2 Wire Unbundled ADSL Loop including manual service inquiry & facility reservation - Zone 3 | | 3 | UAL | UAL2X | 30.77 | 156.95 | 64.54 | 89.64 | 16.93 | | | 20.35 | 10.54 | 13.32 | 13.32 |
| | 2 Wire Unbundled ADSL Loop without manual service inquiry & facility reservaton - Zone 1 | | 1 | UAL | UAL2W | 12.30 | 89.40 | 35.91 | 72.02 | 11.48 | | | 20.35 | 10.54 | 13.32 | 13.32 |
| | 2 Wire Unbundled ADSL Loop without manual service inquiry & facility reservaton - Zone 2 | | 2 | UAL | UAL2W | 18.43 | 89.40 | 35.91 | 72.02 | 11.48 | | | 20.35 | 10.54 | 13.32 | 13.32 |
| | 2 Wire Unbundled ADSL Loop without manual service inquiry & facility reservaton - Zone 3 | | 3 | UAL | UAL2W | 30.77 | 89.40 | 35.91 | 72.02 | 11.48 | | | 20.35 | 10.54 | 13.32 | 13.32 |
| | CLEC to CLEC Conversion Charge without outside dispatch | | | UAL | UREWO | | 31.99 | 20.02 | | | | | 20.35 | 10.54 | 13.32 | 13.32 |
| | **2-WIRE HIGH BIT RATE DIGITAL SUBSCRIBER LINE (HDSL) COMPATIBLE LOOP** | | | | | | | | | | | | | | | |
| | 2 Wire Unbundled HDSL Loop including manual service inquiry & facility reservation - Zone 1 | | 1 | UHL | UHL2X | 9.64 | 158.94 | 65.20 | 89.64 | 16.93 | | | 20.35 | 10.54 | 13.32 | 13.32 |
| | 2 Wire Unbundled HDSL Loop including manual service inquiry & facility reservation - Zone 2 | | 2 | UHL | UHL2X | 14.44 | 158.94 | 65.20 | 89.64 | 16.93 | | | 20.35 | 10.54 | 13.32 | 13.32 |
| | 2 Wire Unbundled HDSL Loop including manual service inquiry & facility reservation - Zone 3 | | 3 | UHL | UHL2X | 24.12 | 158.94 | 65.20 | 89.64 | 16.93 | | | 20.35 | 10.54 | 13.32 | 13.32 |
| | 2 Wire Unbundled HDSL Loop without manual service inquiry and facility reservation - Zone 1 | | 1 | UHL | UHL2W | 9.64 | 89.40 | 35.91 | 72.02 | 11.48 | | | 20.35 | 10.54 | 13.32 | 13.32 |
| | 2 Wire Unbundled HDSL Loop without manual service inquiry and facility reservation - Zone 2 | | 2 | UHL | UHL2W | 14.44 | 89.40 | 35.91 | 72.02 | 11.48 | | | 20.35 | 10.54 | 13.32 | 13.32 |
| | 2 Wire Unbundled HDSL Loop without manual service inquiry and facility reservation - Zone 3 | | 3 | UHL | UHL2W | 24.12 | 89.40 | 35.91 | 72.02 | 11.48 | | | 20.35 | 10.54 | 13.32 | 13.32 |
| | CLEC to CLEC Conversion Charge without outside dispatch | | | UHL | UREWO | | 31.99 | 20.02 | | | | | 20.35 | 10.54 | 13.32 | 13.32 |
| | **4-WIRE HIGH BIT RATE DIGITAL SUBSCRIBER LINE (HDSL) COMPATIBLE LOOP** | | | | | | | | | | | | | | | |
| | 4 Wire Unbundled HDSL Loop including manual service inquiry and facility reservation - Zone 1 | | 1 | UHL | UHL4X | 12.40 | 169.62 | 75.89 | 39.73 | 19.53 | | | 20.35 | 10.54 | 13.32 | 13.32 |
| | 4-Wire Unbundled HDSL Loop including manual service inquiry and facility reservation - Zone 2 | | 2 | UHL | UHL4X | 18.58 | 169.62 | 75.89 | 39.73 | 19.53 | | | 20.35 | 10.54 | 13.32 | 13.32 |
| | 4-Wire Unbundled HDSL Loop including manual service inquiry and facility reservation - Zone 3 | | 3 | UHL | UHL4X | 31.03 | 169.62 | 75.89 | 39.73 | 19.53 | | | 20.35 | 10.54 | 13.32 | 13.32 |
| | 4-Wire Unbundled HDSL Loop without manual service inquiry and facility reservation - Zone 1 | | 1 | UHL | UHL4W | 12.40 | 100.09 | 46.60 | 75.75 | 13.97 | | | 20.35 | 10.54 | 13.32 | 13.32 |
| | 4-Wire Unbundled HDSL Loop without manual service inquiry and facility reservation - Zone 2 | | 2 | UHL | UHL4W | 18.58 | 100.09 | 46.60 | 75.75 | 13.97 | | | 20.35 | 10.54 | 13.32 | 13.32 |
| | 4-Wire Unbundled HDSL Loop without manual service inquiry and facility reservation - Zone 3 | | 3 | UHL | UHL4W | 31.03 | 100.09 | 46.60 | 75.75 | 13.97 | | | 20.35 | 10.54 | 13.32 | 13.32 |
| | CLEC to CLEC Conversion Charge without outside dispatch | | | UHL | UREWO | | 31.99 | 20.02 | | | | | 20.35 | 10.54 | 13.32 | 13.32 |
| | **4-WIRE DS1 DIGITAL LOOP** | | | | | | | | | | | | | | | |
| | 4-Wire DS1 Digital Loop - Zone 1 | | 1 | USL, NTCD1 | USLXX | 51.38 | 313.08 | 219.72 | 96.86 | 40.45 | | | 18.98 | 8.43 | 11.95 | 11.95 |
| | 4-Wire DS1 Digital Loop - Zone 2 | | 2 | USL, NTCD1 | USLXX | 76.98 | 313.08 | 219.72 | 96.86 | 40.45 | | | 18.98 | 8.43 | 11.95 | 11.95 |
| | 4-Wire DS1 Digital Loop - Zone 3 | | 3 | USL, NTCD1 | USLXX | 128.54 | 313.08 | 219.72 | 96.86 | 40.45 | | | 18.98 | 8.43 | 11.95 | 11.95 |
| | Switch-As-Is Conversion rate per UNE Loop, Single LSR, (per DS1) | | | USL, NTCD1 | URESL | | 20.61 | 2.96 | | | | | | | | |
| | Switch-As-Is Conversion rate per UNE Loop, Spreadsheet, (per DS1) | | | USL, NTCD1 | URESP | | 21.94 | 4.29 | | | | | | | | |
| | CLEC to CLEC Conversion Charge without outside dispatch | | | USL | UREWO | | 130.47 | 40.11 | | | | | 20.35 | 10.54 | 13.32 | 13.32 |
| | **4-WIRE 19.2, 56 OR 64 KBPS DIGITAL GRADE LOOP** | | | | | | | | | | | | | | | |
| | 4 Wire Unbundled Digital 19.2 Kbps | | 1 | UDL, NTCUD | UDL19 | 27.68 | 207.01 | 141.38 | 90.70 | 44.18 | | | 20.35 | 10.54 | 13.32 | 13.32 |
| | 4 Wire Unbundled Digital 19.2 Kbps | | 2 | UDL, NTCUD | UDL19 | 41.47 | 207.01 | 141.38 | 90.70 | 44.18 | | | 20.35 | 10.54 | 13.32 | 13.32 |
| | 4 Wire Unbundled Digital 19.2 Kbps | | 3 | UDL, NTCUD | UDL19 | 69.24 | 207.01 | 141.38 | 90.70 | 44.18 | | | 20.35 | 10.54 | 13.32 | 13.32 |
| | 4 Wire Unbundled Digital Loop 56 Kbps - Zone 1 | | 1 | UDL, NTCUD | UDL56 | 27.68 | 207.01 | 141.38 | 90.70 | 44.18 | | | 20.35 | 10.54 | 13.32 | 13.32 |
| | 4 Wire Unbundled Digital Loop 56 Kbps - Zone 2 | | 2 | UDL, NTCUD | UDL56 | 41.47 | 207.01 | 141.38 | 90.70 | 44.18 | | | 20.35 | 10.54 | 13.32 | 13.32 |
| | 4 Wire Unbundled Digital Loop 56 Kbps - Zone 3 | | 3 | UDL, NTCUD | UDL56 | 69.24 | 207.01 | 141.38 | 90.70 | 44.18 | | | 20.35 | 10.54 | 13.32 | 13.32 |
| | 4 Wire Unbundled Digital Loop 64 Kbps - Zone 1 | | 1 | UDL, NTCUD | UDL64 | 27.68 | 207.01 | 141.38 | 90.70 | 44.18 | | | 20.35 | 10.54 | 13.32 | 13.32 |
| | 4 Wire Unbundled Digital Loop 64 Kbps - Zone 2 | | 2 | UDL, NTCUD | UDL64 | 41.47 | 207.01 | 141.38 | 90.70 | 44.18 | | | 20.35 | 10.54 | 13.32 | 13.32 |

| CATEGORY | | RATE ELEMENTS | Interim | Zone | BCS | USOC | RATES($) | | | | | Svc Order Submitted Elec per LSR | Svc Order Submitted Manually per LSR | Incremental Charge - Manual Svc Order vs. Electronic-1st | Incremental Charge - Manual Svc Order vs. Electronic-Add'l | Incremental Charge - Manual Svc Order vs. Electronic-Disc 1st | Incremental Charge - Manual Svc Order vs. Electronic-Disc Add'l |
|---|---|---|---|---|---|---|---|---|---|---|---|---|---|---|---|---|---|
| | | | | | | | Rec | Nonrecurring | | Nonrecurring Disconnect | | OSS Rates($) | | | | | |
| | | | | | | | | First | Add'l | First | Add'l | SOMEC | SOMAN | SOMAN | SOMAN | SOMAN | SOMAN |
| | | 4 Wire Unbundled Digital Loop 64 Kbps - Zone 3 | | 3 | UDL, NTCUD | UDL64 | 69.24 | 207.01 | 141.38 | 90.70 | 44.18 | | | 20.35 | 10.54 | 13.32 | 13.32 |
| | | Switch-As-Is Conversion rate per UNE Loop, Single LSR, (per DS0) | | | UDL, NTCUD | URESL | | 20.61 | 2.96 | | | | | 20.35 | 10.54 | 13.32 | 13.32 |
| | | Switch-As-Is Conversion rate per UNE Loop, Spreadsheet, (per DS0) | | | UDL, NTCUD | URESP | | 21.94 | 4.29 | | | | | | | | |
| | | CLEC to CLEC Conversion Charge without outside dispatch | | | UDL, NTCUD | UREWO | | 102.28 | 49.82 | | | | | 20.35 | 10.54 | 13.32 | 13.32 |
| | **2-WIRE Unbundled COPPER LOOP** | | | | | | | | | | | | | | | | |
| | | 2-Wire Unbundled Copper Loop-Designed including manual service inquiry & facility reservation - Zone 1 | | 1 | UCL | UCLPB | 11.74 | 31.99 | 20.02 | 10.65 | 1.41 | | | 20.35 | 10.54 | 13.32 | 13.32 |
| | | 2-Wire Unbundled Copper Loop-Designed including manual service inquiry & facility reservation - Zone 2 | | 2 | UCL | UCLPB | 17.59 | 31.99 | 20.02 | 10.65 | 1.41 | | | 20.35 | 10.54 | 13.32 | 13.32 |
| | | 2 Wire Unbundled Copper Loop-Designed including manual service inquiry & facility reservation - Zone 3 | | 3 | UCL | UCLPB | 29.37 | 31.99 | 20.02 | 10.65 | 1.41 | | | 20.35 | 10.54 | 13.32 | 13.32 |
| | | 2-Wire Unbundled Copper Loop-Designed without manual service inquiry and facility reservation - Zone 1 | | 1 | UCL | UCLPW | 11.74 | 31.99 | 20.02 | 10.65 | 1.41 | | | 20.35 | 10.54 | 13.32 | 13.32 |
| | | 2-Wire Unbundled Copper Loop-Designed without manual service inquiry and facility reservation - Zone 2 | | 2 | UCL | UCLPW | 17.59 | 31.99 | 20.02 | 10.65 | 1.41 | | | 20.35 | 10.54 | 13.32 | 13.32 |
| | | 2-Wire Unbundled Copper Loop-Designed without manual service inquiry and facility reservation - Zone 3 | | 3 | UCL | UCLPW | 29.37 | 31.99 | 20.02 | 10.65 | 1.41 | | | 20.35 | 10.54 | 13.32 | 13.32 |
| | | CLEC to CLEC Conversion Charge without outside dispatch (UCL-Des) | | | UCL | UREWO | | 31.99 | 20.02 | | | | | 20.35 | 10.54 | 13.32 | 13.32 |
| | **4-WIRE COPPER LOOP** | | | | | | | | | | | | | | | | |
| | | 4-Wire Copper Loop-Designed including manual service inquiry and facility reservation - Zone 1 | | 1 | UCL | UCL4S | 21.98 | 122.76 | 85.57 | 76.35 | 39.16 | | | 20.35 | 10.54 | 13.32 | 13.32 |
| | | 4-Wire Copper Loop-Designed including manual service inquiry and facility reservation - Zone 2 | | 2 | UCL | UCL4S | 32.93 | 122.76 | 85.57 | 76.35 | 39.16 | | | 20.35 | 10.54 | 13.32 | 13.32 |
| | | 4-Wire Copper Loop-Designed including manual service inquiry and facility reservation - Zone 3 | | 3 | UCL | UCL4S | 54.99 | 122.76 | 85.57 | 76.35 | 39.16 | | | 20.35 | 10.54 | 13.32 | 13.32 |
| | | 4-Wire Copper Loop-Designed without manual service inquiry and facility reservation - Zone 1 | | 1 | UCL | UCL4W | 21.98 | 122.76 | 85.57 | 76.35 | 39.16 | | | 20.35 | 10.54 | 13.32 | 13.32 |
| | | 4-Wire Copper Loop-Designed without manual service inquiry and facility reservation - Zone 2 | | 2 | UCL | UCL4W | 32.93 | 122.76 | 85.57 | 76.35 | 39.16 | | | 20.35 | 10.54 | 13.32 | 13.32 |
| | | 4-Wire Copper Loop-Designed without manual service inquiry and facility reservation - Zone 3 | | 3 | UCL | UCL4W | 54.99 | 122.76 | 85.57 | 76.35 | 39.16 | | | 20.35 | 10.54 | 13.32 | 13.32 |
| | | CLEC to CLEC Conversion Charge without outside dispatch (UCL-Des) | | | UCL | UREWO | | 31.99 | 20.02 | | | | | 20.35 | 10.54 | 13.32 | 13.32 |
| | | Order Coordination for Unbundled Copper Loops (per loop) | | | UCL | UCLMC | | 36.52 | 36.52 | | | | | | | | |
| | | Order Coordination for Specified Conversion Time (per LSR) | | | UEA, UDN, UAL, UHL, UDL, NTCVG, NTCUD, USL, NTCD1, UEANL | OCOSL | | 34.29 | | | | | | | | | |
| **LOOP MODIFICATION** | | | | | | | | | | | | | | | | | |
| | **Service** | Unbundled Loop Modification, Removal of Load Coils - 2 Wire pair less than or equal to 18k ft, per Unbundled Loop | | | UAL, UHL, UCL, UEQ, ULS, UEA, UEANL, UEPSR, UEPSB | ULM2L | | 65.40 | 65.40 | | | | | | | | |
| | **Service** | Unbundled Loop Modification Removal of Load Coils - 4 Wire less than or equal to 18K ft, per Unbundled Loop | | | UHL, UCL, UEA | ULM4L | | 65.40 | 65.40 | | | | | | | | |
| | **Service** | Unbundled Loop Modification Removal of Bridged Tap Removal, per unbundled loop | | | UAL, UHL, UCL, UEQ, ULS, UEA, UEANL, UEPSR, UEPSB | ULMBT | | 65.44 | 65.44 | | | | | | | | |
| **SUB-LOOPS** | | | | | | | | | | | | | | | | | |
| | **Sub-Loop Distribution** | | | | | | | | | | | | | | | | |
| | | Sub-Loop - Per Cross Box Location - CLEC Feeder Facility Set-Up | | | UEANL, UEF | USBSA | | 517.25 | 517.25 | | | | | 20.35 | 10.54 | 13.32 | 13.32 |
| | | Sub-Loop - Per Cross Box Location - Per 25 Pair Panel Set-Up | | | UEANL, UEF | USBSB | | 42.68 | 42.68 | | | | | 20.35 | 10.54 | 13.32 | 13.32 |

| CATEGORY | RATE ELEMENTS | Interim | Zone | BCS | USOC | RATES($) | | | | | Svc Order Submitted Elec per LSR | Svc Order Submitted Manually per LSR | Incremental Charge - Manual Svc Order vs. Electronic-1st | Incremental Charge - Manual Svc Order vs. Electronic-Add'l | Incremental Charge - Manual Svc Order vs. Electronic-Disc 1st | Incremental Charge - Manual Svc Order vs. Electronic-Disc Add'l |
|---|---|---|---|---|---|---|---|---|---|---|---|---|---|---|---|---|
| | | | | | | Rec | Nonrecurring | | Nonrecurring Disconnect | | OSS Rates($) | | | | | |
| | | | | | | | First | Add'l | First | Add'l | SOMEC | SOMAN | SOMAN | SOMAN | SOMAN | SOMAN |
| | Sub-Loop - Per Building Equipment Room - CLEC Feeder Facility Set-Up | | | UEANL | USBSC | | 313.01 | 313.01 | | | | | 20.35 | 10.54 | 13.32 | 13.32 |
| | Sub-Loop - Per Building Equipment Room - Per 25 Pair Panel Set-Up | | | UEANL | USBSD | | 108.06 | 108.06 | | | | | 20.35 | 10.54 | 13.32 | 13.32 |
| | Sub-Loop Distribution Per 2-Wire Analog Voice Grade Loop - Statewide | | | UEANL | USBN2 | 10.02 | 148.84 | 112.34 | 73.14 | 36.65 | | | 20.35 | 10.54 | 13.32 | 13.32 |
| | Order Coordination for Unbundled Sub-Loops, per sub-loop pair | | | UEANL | USBMC | | 34.29 | 34.29 | | | | | | | | |
| | Sub-Loop Distribution Per 4-Wire Analog Voice Grade Loop - Zone 1 | | 1 | UEANL | USBN4 | 6.54 | 106.85 | 51.20 | 74.08 | 11.55 | | | 20.35 | 10.54 | 13.32 | 13.32 |
| | Sub-Loop Distribution Per 4-Wire Analog Voice Grade Loop - Zone 2 | | 2 | UEANL | USBN4 | 9.80 | 106.85 | 51.20 | 74.08 | 11.55 | | | 20.35 | 10.54 | 13.32 | 13.32 |
| | Sub-Loop Distribution Per 4-Wire Analog Voice Grade Loop - Zone 3 | | 3 | UEANL | USBN4 | 16.36 | 106.85 | 51.20 | 74.08 | 11.55 | | | 20.35 | 10.54 | 13.32 | 13.32 |
| | Order Coordination for Unbundled Sub-Loops, per sub-loop pair | | | UEANL | USBMC | | 34.29 | 34.29 | | | | | | | | |
| | Sub-Loop 2-Wire Intrabuilding Network Cable (INC) | | | UEANL | USBR2 | 1.35 | 94.56 | 29.35 | | | | | 20.35 | 10.54 | 13.32 | 13.32 |
| | Order Coordination for Unbundled Sub-Loops, per sub-loop pair | | | UEANL | USBMC | | 34.29 | 34.29 | | | | | | | | |
| | Sub-Loop 4-Wire Intrabuilding Network Cable (INC) | | | UEANL | USBR4 | 2.26 | 116.14 | 37.10 | | | | | 20.35 | 10.54 | 13.32 | 13.32 |
| | Order Coordination for Unbundled Sub-Loops, per sub-loop pair | | | UEANL | USBMC | | 34.29 | 34.29 | | | | | | | | |
| | Loop Testing - Basic 1st Half Hour | | | UEANL | URET1 | | 57.67 | 0.00 | | | | | | | | |
| | Loop Testing - Basic Additional Half Hour | | | UEANL | URETA | | 37.44 | 37.44 | | | | | | | | |
| | 2 Wire Copper Unbundled Sub-Loop Distribution - Zone 1 | | 1 | UEF | UCS2X | 4.67 | 81.40 | 25.75 | 70.82 | 9.55 | | | 20.35 | 10.54 | 13.32 | 13.32 |
| | 2 Wire Copper Unbundled Sub-Loop Distribution - Zone 2 | | 2 | UEF | UCS2X | 6.99 | 81.40 | 25.75 | 70.82 | 9.55 | | | 20.35 | 10.54 | 13.32 | 13.32 |
| | 2 Wire Copper Unbundled Sub-Loop Distribution - Zone 3 | | 3 | UEF | UCS2X | 11.67 | 81.40 | 25.75 | 70.82 | 9.55 | | | 20.35 | 10.54 | 13.32 | 13.32 |
| | Order Coordination for Unbundled Sub-Loops, per sub-loop pair | | | UEF | USBMC | | 34.29 | 34.29 | | | | | | | | |
| | 4 Wire Copper Unbundled Sub-Loop Distribution - Zone 1 | | 1 | UEF | UCS4X | 5.85 | 81.74 | 26.08 | 74.08 | 11.55 | | | 20.35 | 10.54 | 13.32 | 13.32 |
| | 4 Wire Copper Unbundled Sub-Loop Distribution - Zone 2 | | 2 | UEF | UCS4X | 8.76 | 81.74 | 26.08 | 74.08 | 11.55 | | | 20.35 | 10.54 | 13.32 | 13.32 |
| | 4 Wire Copper Unbundled Sub-Loop Distribution - Zone 3 | | 3 | UEF | UCS4X | 14.63 | 81.74 | 26.08 | 74.08 | 11.55 | | | 20.35 | 10.54 | 13.32 | 13.32 |
| | Order Coordination for Unbundled Sub-Loops, per sub-loop pair | | | UEF | USBMC | | 34.29 | 34.29 | | | | | | | | |
| | Loop Tagging Service Level 1, Unbundled Copper Loop, Non-Designed and Distribution Subloops | | | UEF, UEANL | URETL | | 8.95 | 0.88 | | | | | | | | |
| | Loop Testing - Basic 1st Half Hour | | | UEF | URET1 | | 57.67 | 0.00 | | | | | | | | |
| | Loop Testing - Basic Additional Half Hour | | | UEF | URETA | | 37.44 | 37.44 | | | | | | | | |
| | **Unbundled Sub-Loop Modification** | | | | | | | | | | | | | | | |
| | Unbundled Sub-Loop Modification - 2-W Copper Dist Load Coil/Equip Removal per 2-W PR | | | UEF | ULM2X | | 335.36 | 7.82 | | | | | | | | |
| | Unbundled Sub-loop Modification - 4-W Copper Dist Load Coil/Equip Removal per 4-W PR | | | UEF | ULM4X | | 335.36 | 7.82 | | | | | | | | |
| | Unbundled Loop Modification, Removal of Bridge Tap, per unbundled loop | | | UEF | ULMBT | | 528.48 | 9.74 | | | | | | | | |
| | **Unbundled Network Terminating Wire (UNTW)** | | | | | | | | | | | | | | | |
| | Unbundled Network Terminating Wire (UNTW) per Pair | | | UENTW | UENPP | 0.4555 | 2.48 | 2.48 | 0.5814 | 0.5814 | | | 20.35 | 10.54 | 13.32 | 13.32 |
| | **Network Interface Device (NID)** | | | | | | | | | | | | | | | |
| | Network Interface Device (NID) - 1-2 lines | | | UENTW | UND12 | | 63.46 | 31.06 | 0.6391 | 0.6391 | | | 20.35 | 10.54 | 13.32 | 13.32 |
| | Network Interface Device (NID) - 1-6 lines | | | UENTW | UND16 | | 63.46 | 31.06 | 0.6522 | 0.6522 | | | 20.35 | 10.54 | 13.32 | 13.32 |
| | Network Interface Device Cross Connect - 2 W | | | UENTW | UNDC2 | | 8.75 | 8.75 | | | | | 20.35 | 10.54 | 13.32 | 13.32 |
| | Network Interface Device Cross Connect - 4W | | | UENTW | UNDC4 | | 8.75 | 8.75 | | | | | 20.35 | 10.54 | 13.32 | 13.32 |
| **UNE OTHER, PROVISIONING ONLY - NO RATE** | | | | | | | | | | | | | | | | |
| | Unbundled Contact Name, Provisioning Only - no rate | | | UAL, UCL, UDC, UDL, UDN, UEA, UHL, UEANL, UEF, UEQ, UENTW, NTCVG, NTCUD, NTCD1, USL | UNECN | 0.00 | 0.00 | | | | | | | | | |

| CATEGORY | RATE ELEMENTS | Interim | Zone | BCS | USOC | RATES($) | | | | | Svc Order Submitted Elec per LSR | Svc Order Submitted Manually per LSR | Incremental Charge - Manual Svc Order vs. Electronic-1st | Incremental Charge - Manual Svc Order vs. Electronic-Add'l | Incremental Charge - Manual Svc Order vs. Electronic-Disc 1st | Incremental Charge - Manual Svc Order vs. Electronic-Disc Add'l |
|---|---|---|---|---|---|---|---|---|---|---|---|---|---|---|---|---|
| | | | | | | Rec | Nonrecurring | | Nonrecurring Disconnect | | OSS Rates($) | | | | | |
| | | | | | | | First | Add'l | First | Add'l | SOMEC | SOMAN | SOMAN | SOMAN | SOMAN | SOMAN |
| | Unbundled DS1 Loop - Superframe Format Option - no rate | | | USL | CCOSF | 0.00 | 0.00 | | | | | | | | | |
| | Unbundled DS1 Loop - Expanded Superframe Format option - no rate | | | USL | CCOEF | 0.00 | 0.00 | | | | | | | | | |
| | NID - Dispatch and Service Order for NID installation | | | UENTW | UNDBX | 0.00 | 0.00 | | | | | | | | | |
| | UNTW Circuit Establishment, Provisioning Only - No Rate | | | UENTW | UENCE | 0.00 | 0.00 | | | | | | | | | |
| **HIGH CAPACITY UNBUNDLED LOCAL LOOP** | | | | | | | | | | | | | | | | |
| | **NOTE: minimum billing period of three months for DS3/STS-1 Local Loop** | | | | | | | | | | | | | | | |
| | High Capacity Unbundled Local Loop - DS3 - Per Mile per month | | | UE3 | 1L5ND | 9.19 | | | | | | | | | | |
| | High Capacity Unbundled Local Loop - DS3 - Facility Termination per month | | | UE3 | UE3PX | 374.24 | 595.37 | 304.50 | 234.83 | 170.16 | | | 36.84 | 36.84 | 19.01 | 19.01 |
| | High Capacity Unbundled Local Loop - STS-1 - Per Mile per month | | | UDLSX | 1L5ND | 9.19 | | | | | | | | | | |
| | High Capacity Unbundled Local Loop - STS-1 - Facility Termination per month | | | UDLSX | UDLS1 | 389.35 | 595.37 | 304.50 | 215.82 | 151.15 | | | 36.84 | 36.84 | 19.01 | 19.01 |
| **LOOP MAKE-UP** | | | | | | | | | | | | | | | | |
| | Loop Makeup - Preordering Without Reservation, per working or spare facility queried (Manual). | | | UMK | UMKLW | | 0.76 | 0.76 | | | | | 20.35 | 10.54 | 13.32 | 13.32 |
| | Loop Makeup - Preordering With Reservation, per spare facility queried (Manual). | | | UMK | UMKLP | | 0.76 | 0.76 | | | | | 20.35 | 10.54 | 13.32 | 13.32 |
| | Loop Makeup--With or Without Reservation, per working or spare facility queried (Mechanized) | | | UMK | UMKMQ | | 0.76 | 0.76 | | | | | 20.35 | 10.54 | 13.32 | 13.32 |
| **LINE SPLITTING** | | | | | | | | | | | | | | | | |
| | **END USER ORDERING-CENTRAL OFFICE BASED** | | | | | | | | | | | | | | | |
| | Line Splitting - per line activation DLEC owned splitter | | | UEPSR UEPSB | UREOS | 0.61 | | | | | | | | | | |
| | Line Splitting - per line activation BST owned - physical | | | UEPSR UEPSB | UREBP | 0.61 | 48.96 | 21.39 | 35.06 | 10.79 | | | 20.35 | 10.54 | 13.32 | 13.32 |
| | Line Splitting - per line activation BST owned - virtual | | | UEPSR UEPSB | UREBV | 0.61 | 48.96 | 21.39 | 35.06 | 10.79 | | | 20.35 | 10.54 | 13.32 | 13.32 |
| | **UNBUNDLED EXCHANGE ACCESS LOOP** | | | | | | | | | | | | | | | |
| | **2-WIRE ANALOG VOICE GRADE LOOP** | | | | | | | | | | | | | | | |
| | 2 Wire Analog Voice Grade Loop-Service Level 1-Line Splitting-Zone 1 | | 1 | UEPSR UEPSB | UEALS | 11.74 | 31.99 | 20.02 | 10.65 | 1.41 | | | 20.35 | 10.54 | 13.32 | 13.32 |
| | 2 Wire Analog Voice Grade Loop-Service Level 1-Line Splitting-Zone 1 | | 1 | UEPSR UEPSB | UEABS | 11.74 | 31.99 | 20.02 | 10.65 | 1.41 | | | 20.35 | 10.54 | 13.32 | 13.32 |
| | 2 Wire Analog Voice Grade Loop- Service Level 1-Line Splitting-Zone 2 | | 2 | UEPSR UEPSB | UEALS | 17.59 | 31.99 | 20.02 | 10.65 | 1.41 | | | 20.35 | 10.54 | 13.32 | 13.32 |
| | 2 Wire Analog Voice Grade Loop- Service Level 1-Line Splitting-Zone 2 | | 2 | UEPSR UEPSB | UEABS | 17.59 | 31.99 | 20.02 | 10.65 | 1.41 | | | 20.35 | 10.54 | 13.32 | 13.32 |
| | 2 Wire Analog Voice Grade Loop-Service Level 1-Line Splitting-Zone 3 | | 3 | UEPSR UEPSB | UEALS | 29.37 | 31.99 | 20.02 | 10.65 | 1.41 | | | 20.35 | 10.54 | 13.32 | 13.32 |
| | 2 Wire Analog Voice Grade Loop-Service Level 1-Line Splitting-Zone 3 | | 3 | UEPSR UEPSB | UEABS | 29.37 | 31.99 | 20.02 | 10.65 | 1.41 | | | 20.35 | 10.54 | 13.32 | 13.32 |
| | **PHYSICAL COLLOCATION** | | | | | | | | | | | | | | | |
| | Physical Collocation-2 Wire Cross Connects (Loop) for Line Splitting | | | UEPSR UEPSB | PE1LS | 0.0475 | 11.62 | 9.90 | 10.38 | 8.66 | | | 0.00 | 0.00 | 0.00 | 0.00 |
| | **VIRTUAL COLLOCATION** | | | | | | | | | | | | | | | |
| | Virtual Collocation-2 Wire Cross Connects (Loop) for Line Splitting | | | UEPSR UEPSB | VE1LS | 0.57 | 11.62 | 9.90 | 10.38 | 8.66 | | | 2.07 | 2.81 | 0.67 | 1.41 |
| **UNBUNDLED DEDICATED TRANSPORT** | | | | | | | | | | | | | | | | |
| | **INTEROFFICE CHANNEL - DEDICATED TRANSPORT** | | | | | | | | | | | | | | | |
| | Interoffice Channel - Dedicated Transport - 2-Wire Voice Grade - Per Mile per month | | | U1TVX | 1L5XX | 0.0174 | | | | | | | | | | |
| | Interoffice Channel - Dedicated Transport- 2- Wire Voice Grade - Facility Termination | | | U1TVX | U1TV2 | 18.58 | 55.39 | 17.37 | 27.96 | 3.51 | | | 20.35 | 21.09 | 9.80 | 10.54 |
| | Interoffice Channel - Dedicated Transpor t- 2-Wire Voice Grade Rev Bat. - Per Mile per month | | | U1TVX | 1L5XX | 0.0174 | | | | | | | | | | |
| | Interoffice Channel - Dedicated Transport- 2- Wire VG Rev Bat. - Facility Termination | | | U1TVX | U1TR2 | 18.58 | 55.39 | 17.37 | 27.96 | 3.51 | | | 20.35 | 21.09 | 9.80 | 10.54 |
| | Interoffice Channel - Dedicated Transport - 4-Wire Voice Grade - Per Mile per month | | | U1TVX | 1L5XX | 0.0174 | | | | | | | | | | |

| CATEGORY | RATE ELEMENTS | Interim | Zone | BCS | USOC | RATES($) | | | | | Svc Order Submitted Elec per LSR | Svc Order Submitted Manually per LSR | Incremental Charge - Manual Svc Order vs. Electronic-1st | Incremental Charge - Manual Svc Order vs. Electronic-Add'l | Incremental Charge - Manual Svc Order vs. Electronic-Disc 1st | Incremental Charge - Manual Svc Order vs. Electronic-Disc Add'l |
|---|---|---|---|---|---|---|---|---|---|---|---|---|---|---|---|---|
| | | | | | | Rec | Nonrecurring | | Nonrecurring Disconnect | | OSS Rates($) | | | | | |
| | | | | | | | First | Add'l | First | Add'l | SOMEC | SOMAN | SOMAN | SOMAN | SOMAN | SOMAN |
| | Interoffice Channel - Dedicated Transport - 4- Wire Voice Grade - Facility Termination | | | U1TVX | U1TV4 | 24.09 | 37.87 | 26.02 | 30.78 | 13.07 | | | 15.08 | 15.08 | 9.80 | 10.54 |
| | Wholesale to UNE Switch-As-Is Charge | | | U1TVX | UNCCC | | 52.30 | 24.62 | 9.12 | 9.12 | | | | | | |
| | Interoffice Channel - Dedicated Transport - 56 kbps - per mile per month | | | U1TDX | 1L5XX | 0.0174 | | | | | | | | | | |
| | Interoffice Channel - Dedicated Transport - 56 kbps - Facility Termination | | | U1TDX | U1TD5 | 17.98 | 55.39 | 17.37 | 27.96 | 3.51 | | | 20.35 | 21.09 | 9.80 | 10.54 |
| | Interoffice Channel - Dedicated Transport - 64 kbps - per mile per month | | | U1TDX | 1L5XX | 0.0174 | | | | | | | | | | |
| | Interoffice Channel - Dedicated Transport - 64 kbps - Facility Termination | | | U1TDX | U1TD6 | 17.98 | 55.39 | 17.37 | 27.96 | 3.51 | | | 20.35 | 21.09 | 9.80 | 10.54 |
| | Wholesale to UNE Switch-As-Is Charge | | | U1TDX | UNCCC | | 52.30 | 24.62 | 9.12 | 9.12 | | | | | | |
| | Interoffice Channel - Dedicated Channel - DS1 - Per Mile per month | | | U1TD1 | 1L5XX | 0.3562 | | | | | | | | | | |
| | Interoffice Channel - Dedicated Tranport - DS1 - Facility Termination | | | U1TD1 | U1TF1 | 77.86 | 112.40 | 76.27 | 19.55 | 14.99 | | | 20.35 | 21.09 | 9.80 | 10.54 |
| | Wholesale to UNE Switch-As-Is Charge | | | U1TD1 | UNCCC | | 52.30 | 24.62 | 9.12 | 9.12 | | | | | | |
| | Interoffice Channel - Dedicated Transport - DS3 - Per Mile per month | | | U1TD3 | 1L5XX | 2.34 | | | | | | | | | | |
| | Interoffice Channel - Dedicated Transport - DS3 - Facility Termination per month | | | U1TD3 | U1TF3 | 848.99 | 395.29 | 176.56 | 109.04 | 105.91 | | | 36.84 | 36.84 | 19.01 | 19.01 |
| | Wholesale to UNE Switch-As-Is Charge | | | U1TD1 | UNCCC | | 52.30 | 24.62 | 9.12 | 9.12 | | | | | | |
| | Interoffice Channel - Dedicated Transport - STS-1 - Per Mile per month | | | U1TS1 | 1L5XX | 2.34 | | | | | | | | | | |
| | Interoffice Channel - Dedicated Transport - STS-1 - Facility Termination | | | U1TS1 | U1TFS | 849.30 | 395.29 | 176.56 | 109.04 | 105.91 | | | 36.84 | 36.84 | 19.01 | 19.01 |
| | Wholesale to UNE Switch-As-Is Charge | | | U1TS1 | UNCCC | | 52.30 | 24.62 | 9.12 | 9.12 | | | | | | |
| | **UNBUNDLED DARK FIBER** | | | | | | | | | | | | | | | |
| | Dark Fiber, Per Four Fiber Strands, Per Route Mile Or Fraction Thereof - Interoffice Transport | | | UDF, UDFCX | 1L5DF | 28.74 | 1,121.00 | 153.19 | | | | | | | | |
| **911 PBX LOCATE** | | | | | | | | | | | | | | | | |
| | **911 PBX LOCATE DATABASE CAPABILITY** | | | | | | | | | | | | | | | |
| | Service Establishment per CLEC per End User Account | | | 9PBDC | 9PBEU | | 1,706.00 | | | | | | | | | |
| | Changes to TN Range or Customer Profile | | | 9PBDC | 9PBTN | | 170.69 | | | | | | | | | |
| | Per Telephone Number (Monthly) | | | 9PBDC | 9PBMM | 0.07 | | | | | | | | | | |
| | Change Company (Service Provider) ID | | | 9PBDC | 9PBPC | | 501.06 | | | | | | | | | |
| | PBX Locate Service Support per CLEC (MonthIt) | | | 9PBDC | 9PBMR | 191.92 | | | | | | | | | | |
| | Service Order Charge | | | 9PBDC | 9PBSC | | 23.20 | | | | | | | | | |
| | **911 PBX LOCATE TRANSPORT COMPONENT** | | | | | | | | | | | | | | | |
| | **See Att 3** | | | | | | | | | | | | | | | |
| **ENHANCED EXTENDED LINK (EELs)** | | | | | | | | | | | | | | | | |
| | **NOTE: The monthly recurring and non-recurring charges below will apply and the Switch-As-Is Charge will not apply for UNE combinations provisioned as ' Ordinarily Combined' Network Elements.** | | | | | | | | | | | | | | | |
| | **NOTE: The monthly recurring and the Switch-As-Is Charge and not the non-recurring charges below will apply for UNE combinations provisioned as ' Currently Combined' Network Elements.** | | | | | | | | | | | | | | | |
| | **EXTENTED 2-WIRE VOICE GRADE EXTENDED LOOP WITH DEDICATED DS1 INTEROFFICE TRANSPORT** | | | | | | | | | | | | | | | |
| | First 2-Wire VG Loop (SL2) in Combination - Zone 1 | | 1 | UNCVX | UEAL2 | 14.74 | 108.76 | 35.47 | 72.94 | 10.86 | | | 31.26 | 10.42 | | |
| | First 2-Wire VG Loop (SL2) in Combination - Zone 2 | | 2 | UNCVX | UEAL2 | 22.08 | 108.76 | 35.47 | 72.94 | 10.86 | | | 31.26 | 10.42 | | |
| | First 2-Wire VG Loop (SL2) in Combination - Zone 3 | | 3 | UNCVX | UEAL2 | 36.87 | 108.76 | 35.47 | 72.94 | 10.86 | | | 31.26 | 10.42 | | |
| | Interoffice Transport - Dedicated - DS1 combination - Per Mile per month | | | UNC1X | 1L5XX | 0.3562 | | | | | | | | | | |
| | Interoffice Transport - Dedicated - DS1 combination - Facility Termination per month | | | UNC1X | U1TF1 | 77.86 | 171.24 | 113.12 | 70.07 | 30.90 | | | 20.35 | 21.09 | 9.80 | 10.54 |
| | 1/0 Channelization System in combination Per Month | | | UNC1X | MQ1 | 80.77 | 105.76 | 14.48 | 3.04 | 2.74 | | | | | | |
| | Voice Grade COCI - Per Month | | | UNCVX | 1D1VG | 0.91 | 5.70 | 4.42 | | | | | | | | |
| | Each Additional 2-Wire VG Loop (SL 2) in Combination - Zone 1 | | 1 | UNCVX | UEAL2 | 14.74 | 108.76 | 35.47 | 72.94 | 10.86 | | | 31.26 | 10.42 | | |
| | Each Additional 2-Wire VG Loop (SL 2) in Combination - Zone 2 | | 2 | UNCVX | UEAL2 | 22.08 | 108.76 | 35.47 | 72.94 | 10.86 | | | 31.26 | 10.42 | | |
| | Each Additional 2-Wire VG Loop (SL 2) in Combination - Zone 3 | | 3 | UNCVX | UEAL2 | 36.87 | 108.76 | 35.47 | 72.94 | 10.86 | | | 31.26 | 10.42 | | |

| CATEGORY | RATE ELEMENTS | Interim | Zone | BCS | USOC | RATES($) | | | | | Svc Order Submitted Elec per LSR | Svc Order Submitted Manually per LSR | Incremental Charge - Manual Svc Order vs. Electronic-1st | Incremental Charge - Manual Svc Order vs. Electronic-Add'l | Incremental Charge - Manual Svc Order vs. Electronic-Disc 1st | Incremental Charge - Manual Svc Order vs. Electronic-Disc Add'l |
|---|---|---|---|---|---|---|---|---|---|---|---|---|---|---|---|---|
| | | | | | | Rec | Nonrecurring | | Nonrecurring Disconnect | | OSS Rates($) | | | | | |
| | | | | | | | First | Add'l | First | Add'l | SOMEC | SOMAN | SOMAN | SOMAN | SOMAN | SOMAN |
| | Voice Grade COCI - Per Month | | | UNCVX | 1D1VG | 0.91 | 5.70 | 4.42 | | | | | 20.35 | 8.80 | 11.49 | 1.18 |
| | Wholesale to UNE, Switch-As-Is Charge | | | UNC1X | UNCCC | | 52.73 | 24.62 | 9.12 | 9.12 | | | 31.26 | 10.42 | | |
| | **EXTENDED 4-WIRE VOICE GRADE EXTENDED LOOP WITH DEDICATED DS1 INTEROFFICE TRANSPORT** | | | | | | | | | | | | | | | |
| | First 4-Wire Analog Voice Grade Loop in Combination - Zone 1 | | 1 | UNCVX | UEAL4 | 21.98 | 108.76 | 35.47 | 72.94 | 10.86 | | | 31.26 | 10.42 | | |
| | First 4-Wire Analog Voice Grade Loop in Combination - Zone 2 | | 2 | UNCVX | UEAL4 | 32.93 | 108.76 | 35.47 | 72.94 | 10.86 | | | 31.26 | 10.42 | | |
| | First 4-Wire Analog Voice Grade Loop in Combination - Zone 3 | | 3 | UNCVX | UEAL4 | 54.99 | 108.76 | 35.47 | 72.94 | 10.86 | | | 31.26 | 10.42 | | |
| | Interoffice Transport - Dedicated - DS1 combination - Per Mile Per Month | | | UNC1X | 1L5XX | 0.3562 | | | | | | | | | | |
| | Interoffice Transport - Dedicated - DS1 - Facility Termination Per Month | | | UNC1X | U1TF1 | 77.86 | 171.24 | 113.12 | 70.07 | 30.90 | | | 20.35 | 21.09 | 9.80 | 10.54 |
| | 1/0 Channel System in combination Per Month | | | UNC1X | MQ1 | 80.77 | 105.76 | 14.48 | 3.04 | 2.74 | | | 20.35 | 9.80 | 11.49 | 1.18 |
| | Voice Grade COCI in combination - per month | | | UNCVX | 1D1VG | 0.91 | 5.70 | 4.42 | | | | | 20.35 | 9.80 | 11.49 | 1.18 |
| | Additional 4-Wire Analog Voice Grade Loop in same DS1 Interoffice Transport Combination - Zone 1 | | 1 | UNCVX | UEAL4 | 21.98 | 108.76 | 35.47 | 72.94 | 10.86 | | | 31.26 | 10.42 | | |
| | Additional 4-Wire Analog Voice Grade Loop in same DS1 Interoffice Transport Combination - Zone 2 | | 2 | UNCVX | UEAL4 | 32.93 | 108.76 | 35.47 | 72.94 | 10.86 | | | 31.26 | 10.42 | | |
| | Additional 4-Wire Analog Voice Grade Loop in same DS1 Interoffice Transport Combination - Zone 3 | | 3 | UNCVX | UEAL4 | 54.99 | 108.76 | 35.47 | 72.94 | 10.86 | | | 31.26 | 10.42 | | |
| | Additional Voice Grade COCI in combination - per month | | | UNCVX | 1D1VG | 0.91 | 5.70 | 4.42 | | | | | 20.35 | 9.80 | 11.49 | 1.18 |
| | Wholesale to UNE, Switch-As-Is Charge | | | UNC1X | UNCCC | | 52.73 | 24.62 | 9.12 | 9.12 | | | 31.26 | 10.42 | | |
| | **EXTENDED 4-WIRE 56 KBPS EXTENDED DIGITAL LOOP WITH DEDICATED DS1 INTEROFFICE TRANSPORT** | | | | | | | | | | | | | | | |
| | First 4-Wire 56Kbps Digital Grade Loop in Combination - Zone 1 | | 1 | UNCDX | UDL56 | 27.66 | 108.76 | 35.47 | 72.94 | 10.86 | | | 20.35 | 10.54 | 13.32 | |
| | First 4-Wire 56Kbps Digital Grade Loop in Combination - Zone 2 | | 2 | UNCDX | UDL56 | 41.47 | 108.76 | 35.47 | 72.94 | 10.86 | | | 20.35 | 10.54 | 13.32 | |
| | First 4-Wire 56Kbps Digital Grade Loop in Combination - Zone 3 | | 3 | UNCDX | UDL56 | 69.24 | 108.76 | 35.47 | 72.94 | 10.86 | | | 20.35 | 10.54 | 13.32 | |
| | Interoffice Transport - Dedicated - DS1 combination - Per Mile Per Month | | | UNC1X | 1L5XX | 0.3562 | | | | | | | | | | |
| | Interoffice Transport - Dedicated - DS1 - combination Facility Termination Per Month | | | UNC1X | U1TF1 | 77.86 | 171.24 | 113.12 | 70.07 | 30.90 | | | 20.35 | 21.09 | 9.80 | 10.54 |
| | 1/0 Channel System in combination Per Month | | | UNC1X | MQ1 | 80.77 | 105.76 | 14.48 | 3.04 | 2.74 | | | 20.35 | 9.80 | 11.49 | 1.18 |
| | OCU-DP COCI (data) per month (2.4-64kbs) | | | UNCDX | 1D1DD | 0.91 | 5.70 | 4.42 | | | | | 20.35 | 9.80 | 11.49 | 1.18 |
| | Additional 4-Wire 56Kbps Digital Grade Loop in same DS1 Interoffice Transport Combination - Zone 1 | | 1 | UNCDX | UDL56 | 27.66 | 108.76 | 35.47 | 72.94 | 10.86 | | | 20.35 | 10.54 | 13.32 | |
| | Additional 4-Wire 56Kbps Digital Grade Loop in same DS1 Interoffice Transport Combination - Zone 2 | | 2 | UNCDX | UDL56 | 41.47 | 108.76 | 35.47 | 72.94 | 10.86 | | | 20.35 | 10.54 | 13.32 | |
| | Additional 4-Wire 56Kbps Digital Grade Loop in same DS1 Interoffice Transport Combination - Zone 3 | | 3 | UNCDX | UDL56 | 69.24 | 108.76 | 35.47 | 72.94 | 10.86 | | | 20.35 | 10.54 | 13.32 | |
| | Additional OCU-DP COCI (data) - in combination per month (2.4-64kbs) | | | UNCDX | 1D1DD | 0.91 | 5.70 | 4.42 | | | | | 20.35 | 9.90 | 11.49 | 1.18 |
| | Wholesale to UNE, Switch-As-Is Charge | | | UNC1X | UNCCC | | 52.73 | 24.62 | 9.12 | 9.12 | | | 31.26 | 10.42 | 0.00 | |
| | **EXTENDED 4-WIRE 64 KBPS EXTENDED DIGITAL LOOP WITH DEDICATED DS1 INTEROFFICE TRANSPORT** | | | | | | | | | | | | | | | |
| | First 4-Wire 64Kbps Digital Grade Loop in Combination - Zone 1 | | 1 | UNCDX | UDL64 | 27.66 | 108.76 | 35.47 | 72.94 | 10.86 | | | 20.35 | 10.54 | 13.32 | |
| | First 4-Wire 64Kbps Digital Grade Loop in Combination - Zone 2 | | 2 | UNCDX | UDL64 | 41.47 | 108.76 | 35.47 | 72.94 | 10.86 | | | 20.35 | 10.54 | 13.32 | |
| | First 4-Wire 64Kbps Digital Grade Loop in Combination - Zone 3 | | 3 | UNCDX | UDL64 | 69.24 | 108.76 | 35.47 | 72.94 | 10.86 | | | 20.35 | 10.54 | 13.32 | |
| | Interoffice Transport - Dedicated - DS1 combination - Per Mile Per Month | | | UNC1X | 1L5XX | 0.3562 | | | | | | | | | | |
| | interoffice Transport - Dedicated - DS1 combination - Facility Termination Per Month | | | UNC1X | U1TF1 | 77.86 | 171.24 | 113.12 | 70.07 | 30.90 | | | 20.35 | 21.09 | 9.80 | 10.54 |
| | 1/0 Channel System in combination Per Month | | | UNC1X | MQ1 | 80.77 | 105.76 | 14.48 | 3.04 | 2.74 | | | 20.35 | 9.80 | 11.49 | 1.18 |
| | OCU-DP COCI (data) - in combination - per month (2.4-64kbs) | | | UNCDX | 1D1DD | 0.91 | 5.70 | 4.42 | | | | | 20.35 | 9.80 | 11.49 | 1.18 |

| CATEGORY | RATE ELEMENTS | Interim | Zone | BCS | USOC | RATES($) | | | | | Svc Order Submitted Elec per LSR | Svc Order Submitted Manually per LSR | Incremental Charge - Manual Svc Order vs. Electronic-1st | Incremental Charge - Manual Svc Order vs. Electronic-Add'l | Incremental Charge - Manual Svc Order vs. Electronic-Disc 1st | Incremental Charge - Manual Svc Order vs. Electronic-Disc Add'l |
|---|---|---|---|---|---|---|---|---|---|---|---|---|---|---|---|---|
| | | | | | | Rec | Nonrecurring | | Nonrecurring Disconnect | | OSS Rates($) | | | | | |
| | | | | | | | First | Add'l | First | Add'l | SOMEC | SOMAN | SOMAN | SOMAN | SOMAN | SOMAN |
| | Additional 4-Wire 64Kbps Digital Grade Loop in same DS1 Interoffice Transport Combination - Zone 1 | | 1 | UNCDX | UDL64 | 27.66 | 108.76 | 35.47 | 72.94 | 10.86 | | | 20.35 | 10.54 | 13.32 | |
| | Additional 4-Wire 64Kbps Digital Grade Loop in same DS1 Interoffice Transport Combination - Zone 2 | | 2 | UNCDX | UDL64 | 41.47 | 108.76 | 35.47 | 72.94 | 10.86 | | | 20.35 | 10.54 | 13.32 | |
| | Additional 4-Wire 64Kbps Digital Grade Loop in same DS1 Interoffice Transport Combination - Zone 3 | | 3 | UNCDX | UDL64 | 69.24 | 108.76 | 35.47 | 72.94 | 10.86 | | | 20.35 | 10.54 | 13.32 | |
| | Additional OCU-DP COCI (data) - in combination - per month (2.4-64kbs) | | | UNCDX | 1D1DD | 0.91 | 5.70 | 4.42 | | | | | 20.35 | 9.80 | 11.49 | 1.18 |
| | Wholesale to UNE, Switch-As-Is Charge | | | UNC1X | UNCCC | | 52.73 | 24.62 | 9.12 | 9.12 | | | 31.26 | 10.42 | | |
| | **EXTENDED 4-WIRE DS1 DIGITAL EXTENDED LOOP WITH DEDICATED DS1 INTEROFFICE TRANSPORT** | | | | | | | | | | | | | | | |
| | 4-Wire DS1 Digital Loop in Combination - Zone 1 | | 1 | UNC1X | USLXX | 51.38 | 228.40 | 161.74 | 79.87 | 24.88 | | | 18.98 | 8.43 | 11.95 | |
| | 4-Wire DS1 Digital Loop in Combination - Zone 2 | | 2 | UNC1X | USLXX | 76.98 | 228.40 | 161.74 | 79.87 | 24.88 | | | 18.98 | 8.43 | 11.95 | |
| | 4-Wire DS1 Digital Loop in Combination - Zone 3 | | 3 | UNC1X | USLXX | 128.54 | 228.40 | 161.74 | 79.87 | 24.88 | | | 18.98 | 8.43 | 11.95 | |
| | Interoffice Transport - Dedicated - DS1 combination - Per Mile Per Month | | | UNC1X | 1L5XX | 0.3562 | | | | | | | | | | |
| | Interoffice Transport - Dedicated - DS1 combination - Facility Termination Per Month | | | UNC1X | U1TF1 | 77.86 | 171.24 | 113.12 | 70.07 | 30.90 | | | 20.35 | 21.09 | 9.80 | 10.54 |
| | | | | UNC1X | UNCCC | | 52.73 | 24.62 | 9.12 | 9.12 | | | 31.26 | 10.42 | | |
| | **EXTENDED 4-WIRE DS1 DIGITAL EXTENDED LOOP WITH DEDICATED DS3 INTEROFFICE TRANSPORT** | | | | | | | | | | | | | | | |
| | First DS1Loop in Combination - Zone 1 | | 1 | UNC1X | USLXX | 51.38 | 228.40 | 161.74 | 79.87 | 24.88 | | | 18.98 | 8.43 | 11.95 | |
| | First DS1Loop in Combination - Zone 2 | | 2 | UNC1X | USLXX | 76.98 | 228.40 | 161.74 | 79.87 | 24.88 | | | 18.98 | 8.43 | 11.95 | |
| | First DS1Loop in Combination - Zone 3 | | 3 | UNC1X | USLXX | 128.54 | 228.40 | 161.74 | 79.87 | 24.88 | | | 18.98 | 8.43 | 11.95 | |
| | Interoffice Transport - Dedicated - DS3 combination - Per Mile Per Month | | | UNC3X | 1L5XX | 2.34 | | | | | | | | | | |
| | Interoffice Transport - Dedicated - DS3 - Facility Termination per month | | | UNC3X | U1TF3 | 854.97 | 482.01 | 153.81 | 64.43 | 35.43 | | | 36.84 | 36.84 | 19.01 | 19.01 |
| | 3/1Channel System in combination per month | | | UNC3X | MQ3 | 222.98 | 156.02 | 49.41 | 17.12 | 6.77 | | | 20.35 | 9.80 | 11.49 | 1.18 |
| | DS1 COCI in combination per month | | | UNC1X | UC1D1 | 17.58 | 5.70 | 4.42 | | | | | 20.35 | 9.80 | 11.49 | 1.18 |
| | Additional DS1Loop in DS3 Interoffice Transport Combination - Zone 1 | | 1 | UNC1X | USLXX | 51.38 | 228.40 | 161.74 | 79.87 | 24.88 | | | 18.92 | 8.43 | 11.95 | |
| | Additional DS1Loop in DS3 Interoffice Transport Combination - Zone 2 | | 2 | UNC1X | USLXX | 76.98 | 228.40 | 161.74 | 79.87 | 24.88 | | | 18.92 | 8.43 | 11.95 | |
| | Additional DS1Loop in DS3 Interoffice Transport Combination - Zone 3 | | 3 | UNC1X | USLXX | 128.54 | 228.40 | 161.74 | 79.87 | 24.88 | | | 18.92 | 8.43 | 11.95 | |
| | Additoinal DS1 COCI in combination per month | | | UNC1X | UC1D1 | 17.58 | 5.70 | 4.42 | | | | | 20.35 | 9.80 | 11.49 | 1.18 |
| | Wholesale to UNE, Switch-As-Is Charge | | | UNC3X | UNCCC | | 52.73 | 24.62 | 9.12 | 9.12 | | | 31.26 | 10.42 | | |
| | **EXTENDED 2-WIRE VOICE GRADE EXTENDED LOOP/ 2 WIRE VOICE GRADE INTEROFFICE TRANSPORT** | | | | | | | | | | | | | | | |
| | 2-WireVG Loop in combination - Zone 1 | | 1 | UNCVX | UEAL2 | 14.74 | 108.76 | 35.47 | 72.94 | 10.86 | | | 31.26 | 10.42 | | |
| | 2-WireVG Loop in combination - Zone 2 | | 2 | UNCVX | UEAL2 | 22.08 | 108.76 | 35.47 | 72.94 | 10.86 | | | 31.26 | 10.42 | | |
| | 2-WireVG Loop in combination - Zone 3 | | 3 | UNCVX | UEAL2 | 36.87 | 108.76 | 35.47 | 72.94 | 10.86 | | | 31.26 | 10.42 | | |
| | Interoffice Transport - 2-wire VG - Dedicated- Per Mile Per Month | | | UNCVX | 1L5XX | 0.0174 | | | | | | | | | | |
| | Interoffice Transport - 2-wire VG - Dedicated - Facility Termination per month | | | UNCVX | U1TV2 | 18.58 | 79.83 | 44.08 | 69.32 | 31.00 | | | 20.35 | 21.09 | 9.80 | 10.54 |
| | Wholesale to UNE, Switch-As-Is Charge | | | UNCVX | UNCCC | | 52.73 | 24.62 | 9.12 | 9.12 | | | 31.26 | 10.42 | | |
| | **EXTENDED 4-WIRE VOICE GRADE EXTENDED LOOP/ 4 WIRE VOICE GRADE INTEROFFICE TRANSPORT** | | | | | | | | | | | | | | | |
| | 4-WireVG Loop in combination - Zone 1 | | 1 | UNCVX | UEAL4 | 21.98 | 108.76 | 35.47 | 72.94 | 10.86 | | | 31.26 | 10.42 | | |
| | 4-WireVG Loop in combination - Zone 2 | | 2 | UNCVX | UEAL4 | 32.93 | 108.76 | 35.47 | 72.94 | 10.86 | | | 31.26 | 10.42 | | |
| | 4-WireVG Loop in combination - Zone 3 | | 3 | UNCVX | UEAL4 | 54.99 | 108.76 | 35.47 | 72.94 | 10.86 | | | 31.26 | 10.42 | | |
| | Interoffice Transport - 4-wire VG - Dedicated - Per Mile Per Month | | | UNCVX | 1L5XX | 0.0174 | | | | | | | | | | |
| | Interoffice Transport - 4-wire VG - Dedicated - Facility Termination per month | | | UNCVX | U1TV4 | 24.09 | 79.83 | 44.08 | 69.32 | 31.00 | | | 15.08 | 15.08 | 8.66 | 8.66 |
| | Wholesale to UNE, Switch-As-Is Charge | | | UNCVX | UNCCC | | 52.73 | 24.62 | 9.12 | 9.12 | | | 31.26 | 10.42 | | |
| | **EXTENDED DS3 DIGITAL EXTENDED LOOP WITH DEDICATED DS3 INTEROFFICE TRANSPORT** | | | | | | | | | | | | | | | |
| | DS3 Local Loop in combination - per mile per month | | | UNC3X | 1L5ND | 9.19 | | | | | | | | | | |
| | DS3 Local Loop in combination - Facility Termination per month | | | UNC3X | UE3PX | 374.24 | 240.23 | 180.87 | 106.78 | 45.24 | | | 36.84 | 36.84 | 19.01 | 19.01 |
| | Interoffice Transport - Dedicated - DS3 - Per Mile per month | | | UNC3X | 1L5XX | 2.34 | | | | | | | | | | |

| CATEGORY | RATE ELEMENTS | Interim | Zone | BCS | USOC | RATES($) | | | | | Svc Order Submitted Elec per LSR | Svc Order Submitted Manually per LSR | Incremental Charge - Manual Svc Order vs. Electronic-1st | Incremental Charge - Manual Svc Order vs. Electronic-Add'l | Incremental Charge - Manual Svc Order vs. Electronic-Disc 1st | Incremental Charge - Manual Svc Order vs. Electronic-Disc Add'l |
|---|---|---|---|---|---|---|---|---|---|---|---|---|---|---|---|---|
| | | | | | | Rec | Nonrecurring | | Nonrecurring Disconnect | | OSS Rates($) | | | | | |
| | | | | | | | First | Add'l | First | Add'l | SOMEC | SOMAN | SOMAN | SOMAN | SOMAN | SOMAN |
| | Interoffice Transport - Dedicated - DS3 combination - Facility Termination per month | | | UNC3X | U1TF3 | 854.97 | 482.01 | 153.81 | 64.43 | 35.43 | | | 36.84 | 36.84 | 19.01 | 19.01 |
| | Wholesale to UNE, Switch-As-Is Charge | | | UNC3X | UNCCC | | 52.73 | 24.62 | 9.12 | 9.12 | | | 31.26 | 10.42 | | |
| | **EXTENDED STS-1 DIGITAL EXTENDED LOOP WITH DEDICATED STS-1 INTEROFFICE TRANSPORT** | | | | | | | | | | | | | | | |
| | STS-1 Local Lolp in combination - per mile per month | | | UNCSX | 1L5ND | 9.19 | | | | | | | | | | |
| | STS-1 Local Loop in combination - Facility Termination per month | | | UNCSX | UDLS1 | 389.35 | 240.23 | 180.87 | 106.78 | 45.24 | | | 36.84 | 36.84 | 19.01 | 19.01 |
| | Interoffice Transport - Dedicated - STS-1 combination - per mile per month | | | UNCSX | 1L5XX | 2.34 | | | | | | | | | | |
| | Interoffice Transport - Dedicated - STS-1 combination - Facility Termination per month | | | UNCSX | U1TFS | 849.30 | 482.01 | 153.81 | 64.43 | 35.43 | | | 36.84 | 36.84 | 19.01 | 19.01 |
| | Wholesale to UNE, Switch-As-Is Charge | | | UNCSX | UNCCC | | 52.73 | 24.62 | 9.12 | 9.12 | | | 31.26 | 10.42 | | |
| | **EXTENDED 2-WIRE ISDN EXTENDED LOOP WITH DS1 INTEROFFICE TRANSPORT** | | | | | | | | | | | | | | | |
| | First 2-Wire ISDN Loop in Combination - Zone 1 | | 1 | UNCNX | U1L2X | 19.77 | 108.76 | 35.47 | 72.94 | 10.86 | | | 31.26 | 10.42 | | |
| | First 2-Wire ISDN Loop in Combination - Zone 2 | | 2 | UNCNX | U1L2X | 29.63 | 108.76 | 35.47 | 72.94 | 10.86 | | | 31.26 | 10.42 | | |
| | First 2-Wire ISDN Loop in Combination - Zone 3 | | 3 | UNCNX | U1L2X | 49.47 | 108.76 | 35.47 | 72.94 | 10.86 | | | 31.26 | 10.42 | | |
| | Interoffice Transport - Dedicated - DS1 combination - per mile per month | | | UNC1X | 1L5XX | 0.3562 | | | | | | | | | | |
| | Interoffice Transport - Dedicated - DS1 combination - Facility Termination per month | | | UNC1X | U1TF1 | 77.86 | 171.24 | 113.12 | 70.07 | 30.90 | | | 20.35 | 21.09 | 9.80 | 10.54 |
| | 1/0 Channel System in combination - per month | | | UNC1X | MQ1 | 80.77 | 105.76 | 14.48 | 3.04 | 2.74 | | | 20.35 | 9.80 | 11.49 | 1.18 |
| | 2-wire ISDN COCI (BRITE) - in combination - per month | | | UNCNX | UC1CA | 3.10 | 5.70 | 4.42 | | | | | 20.35 | 9.80 | 11.49 | 1.18 |
| | Additional 2-wire ISDN Loop in same DS1Interoffice Transport Combination - Zone 1 | | 1 | UNCNX | U1L2X | 19.77 | 108.76 | 35.47 | 72.94 | 10.86 | | | 31.26 | 10.42 | | |
| | Additional 2-wire ISDN Loop in same DS1Interoffice Transport Combination - Zone 2 | | 2 | UNCNX | U1L2X | 29.63 | 108.76 | 35.47 | 72.94 | 10.86 | | | 31.26 | 10.42 | | |
| | Additional 2-wire ISDN Loop in same DS1Interoffice Transport Combination - Zone 3 | | 3 | UNCNX | U1L2X | 49.47 | 108.76 | 35.47 | 72.94 | 10.86 | | | 31.26 | 10.42 | | |
| | Additional 2-wire ISDN COCI (BRITE) - in combination- per month | | | UNCNX | UC1CA | 3.10 | 5.70 | 4.42 | | | | | 20.35 | 9.80 | 11.49 | 1.18 |
| | Wholesale to UNE, Switch-As-Is Charge | | | UNC1X | UNCCC | | 52.73 | 24.62 | 9.12 | 9.12 | | | 31.26 | 10.42 | | |
| | **EXTENDED 4-WIRE DS1 DIGITAL EXTENDED LOOP WITH DEDICATED STS-1 INTEROFFICE TRANSPORT** | | | | | | | | | | | | | | | |
| | First DS1 Loop Combination - Zone 1 | | 1 | UNC1X | USLXX | 51.38 | 228.40 | 161.74 | 79.87 | 24.88 | | | 18.98 | 8.43 | 11.95 | |
| | First DS1 Loop Combination - Zone 2 | | 2 | UNC1X | USLXX | 76.98 | 228.40 | 161.74 | 79.87 | 24.88 | | | 18.98 | 8.43 | 11.95 | |
| | First DS1 Loop Combination - Zone 3 | | 3 | UNC1X | USLXX | 128.54 | 228.40 | 161.74 | 79.87 | 24.88 | | | 18.98 | 8.43 | 11.95 | |
| | Interoffice Transport - Dedicated - STS-1 combination - Per Mile Per Month | | | UNCSX | 1L5XX | 2.34 | | | | | | | | | | |
| | Interoffice Transport - Dedicated - STS-1 combination - Facility Termination per month | | | UNCSX | U1TFS | 849.30 | 482.01 | 153.81 | 64.43 | 35.43 | | | 36.84 | 36.84 | 19.01 | 19.01 |
| | 3/1 Channel System in combination per month | | | UNCSX | MQ3 | 222.98 | 156.02 | 49.41 | 17.12 | 6.77 | | | 20.35 | 9.80 | 11.49 | 1.18 |
| | DS1 COCI in combination per month | | | UNC1X | UC1D1 | 17.58 | 5.70 | 4.42 | | | | | 20.35 | 9.80 | 11.49 | 1.18 |
| | Additional DS1Loop in the same STS-1 Interoffice Transport Combination - Zone 1 | | 1 | UNC1X | USLXX | 51.38 | 228.40 | 161.74 | 79.87 | 24.88 | | | 18.98 | 8.43 | 11.95 | |
| | Additional DS1Loop in the same STS-1 Interoffice Transport Combination - Zone 2 | | 2 | UNC1X | USLXX | 76.98 | 228.40 | 161.74 | 79.87 | 24.88 | | | 18.98 | 8.43 | 11.95 | |
| | Additional DS1Loop in the same STS-1 Interoffice Transport Combination - Zone 3 | | 3 | UNC1X | USLXX | 128.54 | 228.40 | 161.74 | 79.87 | 24.88 | | | 18.98 | 8.43 | 11.95 | |
| | DS1 COCI in combination per month | | | UNC1X | UC1D1 | 17.58 | 5.70 | 4.42 | | | | | 20.35 | 9.80 | 11.49 | 1.18 |
| | Wholesale to UNE, Switch-As-Is Charge | | | UNCSX | UNCCC | | 52.73 | 24.62 | 9.12 | 9.12 | | | 31.26 | 10.42 | | |
| | **EXTENDED 4-WIRE 56 KBPS DIGITAL EXTENDED LOOP WITH 56 KBPS INTEROFFICE TRANSPORT** | | | | | | | | | | | | | | | |
| | 4-wire 56 kbps Local Loop in combination - Zone 1 | | 1 | UNCDX | UDL56 | 27.66 | 108.76 | 35.47 | 72.94 | 10.86 | | | 20.35 | 10.54 | 13.32 | |
| | 4-wire 56 kbps Local Loop in combination - Zone 2 | | 2 | UNCDX | UDL56 | 41.47 | 108.76 | 35.47 | 72.94 | 10.86 | | | 20.35 | 10.54 | 13.32 | |
| | 4-wire 56 kbps Local Loop in combination - Zone 3 | | 3 | UNCDX | UDL56 | 69.24 | 108.76 | 35.47 | 72.94 | 10.86 | | | 20.35 | 10.54 | 13.32 | |
| | Interoffice Transport - Dedicated - 4-wire 56 kbps combination - Per Mile per month | | | UNCDX | 1L5XX | 0.0174 | | | | | | | | | | |
| | Interoffice Transport - Dedicated - 4-wire 56 kbps combination - Facility Termination per month | | | UNCDX | U1TD5 | 17.98 | 79.83 | 44.08 | 69.32 | 31.00 | | | 20.35 | 21.09 | 9.80 | 10.54 |
| | Wholesale to UNE, Switch-As-Is Charge | | | UNCDX | UNCCC | | 52.73 | 24.62 | 9.12 | 9.12 | | | 31.26 | 10.42 | | |
| | **EXTENDED 4-WIRE 64 KBPS DIGITAL EXTENDED LOOP WITH 64 KBPS INTEROFFICE TRANSPORT** | | | | | | | | | | | | | | | |

| CATEGORY | RATE ELEMENTS | Interim | Zone | BCS | USOC | RATES($) | | | | | Svc Order Submitted Elec per LSR | Svc Order Submitted Manually per LSR | Incremental Charge - Manual Svc Order vs. Electronic-1st | Incremental Charge - Manual Svc Order vs. Electronic-Add'l | Incremental Charge - Manual Svc Order vs. Electronic-Disc 1st | Incremental Charge - Manual Svc Order vs. Electronic-Disc Add'l |
|---|---|---|---|---|---|---|---|---|---|---|---|---|---|---|---|---|
| | | | | | | Rec | Nonrecurring | | Nonrecurring Disconnect | | OSS Rates($) | | | | | |
| | | | | | | | First | Add'l | First | Add'l | SOMEC | SOMAN | SOMAN | SOMAN | SOMAN | SOMAN |
| | 4-wire 64 kbps Lcoal Loop in Combination - Zone 1 | | 1 | UNCDX | UDL64 | 27.66 | 108.76 | 35.47 | 72.94 | 10.86 | | | 20.35 | 10.54 | 13.32 | |
| | 4-wire 64 kbps Lcoal Loop in Combination - Zone 2 | | 2 | UNCDX | UDL64 | 41.47 | 108.76 | 35.47 | 72.94 | 10.86 | | | 20.35 | 10.54 | 13.32 | |
| | 4-wire 64 kbps Lcoal Loop in Combination - Zone 3 | | 3 | UNCDX | UDL64 | 69.24 | 108.76 | 35.47 | 72.94 | 10.86 | | | 20.35 | 10.54 | 13.32 | |
| | Interoffice Transport - Dedicated - 4-wire 64 kbps combination - Per Mile per month | | | UNCDX | 1L5XX | 0.0174 | | | | | | | | | | |
| | Interoffice Transport - Dedicated - 4-wire 64 kbps combination - Facility Termination per month | | | UNCDX | U1TD6 | 17.98 | 79.83 | 44.08 | 69.32 | 31.00 | | | 20.35 | 21.09 | 9.80 | 10.54 |
| | Wholesale to UNE, Switch-As-Is Charge | | | UNCDX | UNCCC | | 52.73 | 24.62 | 9.12 | 9.12 | | | 31.26 | 10.42 | | |
| | **EXTENDED 2-WIRE VOICE GRADE LOOP WITH DS1 INTEROFFICE TRANSPORT w/ 3/1 MUX** | | | | | | | | | | | | | | | |
| | First 2-wire VG Loop (SL2) in Combination - Zone 1 | | 1 | UNCVX | UEAL2 | 14.74 | 108.76 | 35.47 | 72.94 | 10.86 | | | 20.35 | 21.09 | | |
| | First 2-wire VG Loop (SL2) in Combination - Zone 2 | | 2 | UNCVX | UEAL2 | 22.08 | 108.76 | 35.47 | 72.94 | 10.86 | | | 20.35 | 21.09 | | |
| | First 2-wire VG Loop (SL2) in Combination - Zone 3 | | 3 | UNCVX | UEAL2 | 36.87 | 108.76 | 35.47 | 72.94 | 10.86 | | | 20.35 | 21.09 | | |
| | First Interoffice Transport - Dedicated - DS1 combination - Per Mile | | | UNC1X | 1L5XX | 0.3562 | | | | | | | | | | |
| | First Interoffice Transport - Dedicated - DS1 combination - Facility Termination per month | | | UNC1X | U1TF1 | 77.86 | 171.24 | 113.12 | 70.07 | 30.90 | | | 20.35 | 21.09 | 9.80 | 10.54 |
| | Per each DS1 Channelization System Per Month | | | UNC1X | MQ1 | 80.77 | 105.76 | 14.48 | 3.04 | 2.74 | | | 20.35 | 9.80 | 11.49 | 1.18 |
| | Per each Voice Grade COCI - Per Month per month | | | UNCVX | 1D1VG | 0.91 | 5.70 | 4.42 | | | | | 20.35 | 9.80 | 11.49 | 1.18 |
| | 3/1 Channel System in combination per month | | | UNC3X | MQ3 | 222.98 | 156.02 | 49.41 | 17.12 | 6.77 | | | 20.35 | 9.80 | 11.49 | 1.18 |
| | Per each DS1 COCI in combination per month | | | UNC1X | UC1D1 | 17.58 | 5.70 | 4.42 | | | | | 20.35 | 9.80 | 11.49 | 1.18 |
| | Each Additional 2-Wire VG Loop(SL 2) in the same DS1 Interoffice Transport Combination - Zone 1 | | 1 | UNCVX | UEAL2 | 14.74 | 108.76 | 35.47 | 72.94 | 10.86 | | | 20.35 | 21.09 | | |
| | Each Additional 2-Wire VG Loop(SL2) in the same DS1 Interoffice Transport Combination - Zone 2 | | 2 | UNCVX | UEAL2 | 22.08 | 108.76 | 35.47 | 72.94 | 10.86 | | | 20.35 | 21.09 | | |
| | Each Additional 2-Wire VG Loop(SL2) in the same DS1 Interoffice Transport Combination - Zone 3 | | 3 | UNCVX | UEAL2 | 36.87 | 108.76 | 35.47 | 72.94 | 10.86 | | | 20.35 | 21.09 | | |
| | Each Additional Voice Grade COCI in combination - per month | | | UNCVX | 1D1VG | 0.91 | 5.70 | 4.42 | | | | | 20.35 | 9.80 | 11.49 | 1.18 |
| | Each Additional DS1 Interoffice Channel per mile in same 3/1 Channel System per month | | | UNC1X | 1L5XX | 0.3562 | | | | | | | | | | |
| | Each Additional DS1 Interoffice Channel Facility Termination in same 3/1 Channel System per month | | | UNC1X | U1TF1 | 77.86 | 171.24 | 113.12 | 70.07 | 30.90 | | | 20.35 | 9.80 | 11.49 | 1.18 |
| | Each Additional DS1 COCI combination per month | | | UNC1X | UC1D1 | 17.58 | 5.70 | 4.42 | | | | | 20.35 | 9.80 | 11.49 | 1.18 |
| | Wholesale to UNE, Switch-As-Is Charge | | | UNC1X | UNCCC | | 52.73 | 24.62 | 9.12 | 9.12 | | | 31.26 | 10.42 | | |
| | **EXTENDED 4-WIRE VOICE GRADE LOOP WITH DEDICATED DS1 INTEROFFICE TRANSPORT w/ 3/1 MUX** | | | | | | | | | | | | | | | |
| | First 4-Wire Analog Voice Grade Local Loop in Combination - Zone 1 | | 1 | UNCVX | UEAL4 | 21.98 | 108.76 | 35.47 | 72.94 | 10.86 | | | 20.35 | 21.09 | | |
| | First 4-Wire Analog Voice Grade Local Loop in Combination - Zone 2 | | 2 | UNCVX | UEAL4 | 32.93 | 108.76 | 35.47 | 72.94 | 10.86 | | | 20.35 | 21.09 | | |
| | First 4-Wire Analog Voice Grade Local Loop in Combination - Zone 3 | | 3 | UNCVX | UEAL4 | 54.99 | 108.76 | 35.47 | 72.94 | 10.86 | | | 20.35 | 21.09 | | |
| | First Interoffice Transport - Dedicated - DS1 combination - Per Mile Per Month | | | UNC1X | 1L5XX | 0.3562 | | | | | | | | | | |
| | First Interoffice Transport - Dedicated - DS1 - Facility Termination Per Month | | | UNC1X | U1TF1 | 77.86 | 171.24 | 113.12 | 70.07 | 30.90 | | | 20.35 | 21.09 | 9.80 | 10.54 |
| | Per each 1/0 Channel System in combination Per Month | | | UNC1X | MQ1 | 80.77 | 105.76 | 14.48 | 3.04 | 2.74 | | | 20.35 | 9.80 | 11.49 | 1.18 |
| | Per each Voice Grade COCI in combination - per month | | | UNCVX | 1D1VG | 0.91 | 5.70 | 4.42 | | | | | 20.35 | 9.80 | 11.49 | 1.18 |
| | 3/1 Channel System in combination per month | | | UNC3X | MQ3 | 222.98 | 156.02 | 49.41 | 17.12 | 6.77 | | | 20.35 | 9.80 | 11.49 | 1.18 |
| | Per each DS1 COCI in combination per month | | | UNC1X | UC1D1 | 17.58 | 5.70 | 4.42 | | | | | 20.35 | 9.80 | 11.49 | 1.18 |
| | Additional 4-Wire Analog Voice Grade Loop in same DS1 Interoffice Transport Combination - Zone 1 | | 1 | UNCVX | UEAL4 | 21.98 | 108.76 | 35.47 | 72.94 | 10.86 | | | 20.35 | 21.09 | | |
| | Additional 4-Wire Analog Voice Grade Loop in same DS1 Interoffice Transport Combination - Zone 2 | | 2 | UNCVX | UEAL4 | 32.93 | 108.76 | 35.47 | 72.94 | 10.86 | | | 20.35 | 21.09 | | |
| | Additional 4-Wire Analog Voice Grade Loop in same DS1 Interoffice Transport Combination - Zone 3 | | 3 | UNCVX | UEAL4 | 54.99 | 108.76 | 35.47 | 72.94 | 10.86 | | | 20.35 | 21.09 | | |
| | Each Additional DS1 Interoffice Channel per mile in same 3/1 Channel System per month | | | UNC1X | 1L5XX | 0.3562 | | | | | | | | | | |
| | Each Additional DS1 Interoffice Channel Facility Termination in same 3/1 Channel System per month | | | UNC1X | U1TF1 | 77.86 | 171.24 | 113.12 | 70.07 | 30.90 | | | 20.35 | 9.80 | 11.49 | 1.18 |
| | Additional Voice Grade COCI - in combination - per month | | | UNCVX | 1D1VG | 0.91 | 5.70 | 4.42 | | | | | 20.35 | 9.80 | 11.49 | 1.18 |

| CATEGORY | RATE ELEMENTS | Interim | Zone | BCS | USOC | RATES($) | | | | | Svc Order Submitted Elec per LSR | Svc Order Submitted Manually per LSR | Incremental Charge - Manual Svc Order vs. Electronic-1st | Incremental Charge - Manual Svc Order vs. Electronic-Add'l | Incremental Charge - Manual Svc Order vs. Electronic-Disc 1st | Incremental Charge - Manual Svc Order vs. Electronic-Disc Add'l |
|---|---|---|---|---|---|---|---|---|---|---|---|---|---|---|---|---|
| | | | | | | Rec | Nonrecurring | | Nonrecurring Disconnect | | OSS Rates($) | | | | | |
| | | | | | | | First | Add'l | First | Add'l | SOMEC | SOMAN | SOMAN | SOMAN | SOMAN | SOMAN |
| | Wholesale to UNE, Switch-As-Is Charge | | | UNC1X | UNCCC | | 52.73 | 24.62 | 9.12 | 9.12 | | | 31.26 | 10.42 | | |
| | First 4-Wire 56Kbps Digital Grade Local Loop in Combination - Zone 1 | | 1 | UNCDX | UDL56 | 27.66 | 108.76 | 35.47 | 72.94 | 10.86 | | | 20.35 | 10.54 | 13.32 | |
| | First 4-Wire 56Kbps Digital Grade Local Loop in Combination - Zone 2 | | 2 | UNCDX | UDL56 | 41.47 | 108.76 | 35.47 | 72.94 | 10.86 | | | 20.35 | 10.54 | 13.32 | |
| | First 4-Wire 56Kbps Digital Grade Local Loop in Combination - Zone 3 | | 3 | UNCDX | UDL56 | 69.24 | 108.76 | 35.47 | 72.94 | 10.86 | | | 20.35 | 10.54 | 13.32 | |
| | First Interoffice Transport - Dedicated - DS1 combination - Per Mile Per Month | | | UNC1X | 1L5XX | 0.3562 | | | | | | | | | | |
| | First Interoffice Transport - Dedicated - DS1 - combination Facility Termination Per Month | | | UNC1X | U1TF1 | 77.86 | 171.24 | 113.12 | 70.07 | 30.90 | | | 20.35 | 21.09 | 9.80 | 10.54 |
| | Per each 1/0 Channel System in combination Per Month | | | UNC1X | MQ1 | 80.77 | 105.76 | 14.48 | 3.04 | 2.74 | | | 20.35 | 9.80 | 11.49 | 1.18 |
| | Per each OCU-DP COCI (data) COCI per month (2.4-64kbs) | | | UNCDX | 1D1DD | 0.91 | 5.70 | 4.42 | | | | | 20.35 | 9.80 | 11.49 | 1.18 |
| | 3/1 Channel System in combination per month | | | UNC3X | MQ3 | 222.98 | 156.02 | 49.41 | 17.12 | 6.77 | | | 20.35 | 9.80 | 11.49 | 1.18 |
| | Per each DS1 COCI in combination per month | | | UNC1X | UC1D1 | 17.58 | 5.70 | 4.42 | | | | | 20.35 | 9.80 | 11.49 | 1.18 |
| | Additional 4-Wire 56Kbps Digital Grade Loop in same DS1 Interoffice Transport Combination - Zone 1 | | 1 | UNCDX | UDL56 | 27.66 | 108.76 | 35.47 | 72.94 | 10.86 | | | 20.35 | 10.54 | 13.32 | |
| | Additional 4-Wire 56Kbps Digital Grade Loop in same DS1 Interoffice Transport Combination - Zone 2 | | 2 | UNCDX | UDL56 | 41.47 | 108.76 | 35.47 | 72.94 | 10.86 | | | 20.35 | 10.54 | 13.32 | |
| | Additional 4-Wire 56Kbps Digital Grade Loop in same DS1 Interoffice Transport Combination - Zone 3 | | 3 | UNCDX | UDL56 | 69.24 | 108.76 | 35.47 | 72.94 | 10.86 | | | 20.35 | 10.54 | 13.32 | |
| | OCU-DP COCI (data) COCI in combination per month (2.4-64kbs) | | | UNCDX | 1D1DD | 0.91 | 5.70 | 4.42 | | | | | 20.35 | 9.80 | 11.49 | 1.18 |
| | Each Additional DS1 Interoffice Channel per mile in same 3/1 Channel System per month | | | UNC1X | 1L5XX | 0.3562 | | | | | | | | | | |
| | Each Additional DS1 Interoffice Channel Facility Termination in same 3/1 Channel System per month | | | UNC1X | U1TF1 | 77.86 | 171.24 | 113.12 | 70.07 | 30.90 | | | 20.35 | 21.09 | 9.80 | 10.54 |
| | Each Additional DS1 COCI in the same 3/1 channel system combination per month | | | UNC1X | UC1D1 | 17.58 | 5.70 | 4.42 | | | | | 20.35 | 9.80 | 11.49 | 1.18 |
| | Wholesale to UNE, Switch-As-Is Charge | | | UNC1X | UNCCC | | 52.73 | 24.62 | 9.12 | 9.12 | | | 31.26 | 10.42 | | |
| | **EXTENDED 4-WIRE 64 KBPS DIGITAL LOOP WITH DEDICATED DS1 INTEROFFICE TRANSPORT w/ 3/1 MUX** | | | | | | | | | | | | | | | |
| | First 4-Wire 64Kbps Digital Grade Loop in a DS1 Interoffice Transport Combination - Zone 1 | | 1 | UNCDX | UDL64 | 27.66 | 108.76 | 35.47 | 72.94 | 10.86 | | | 20.35 | 10.54 | 13.32 | |
| | First 4-Wire 64Kbps Digital Grade Loop in a DS1 Interoffice Transport Combination - Zone 2 | | 2 | UNCDX | UDL64 | 41.47 | 108.76 | 35.47 | 72.94 | 10.86 | | | 20.35 | 10.54 | 13.32 | |
| | First 4-Wire 64Kbps Digital Grade Loop in a DS1 Interoffice Transport Combination - Zone 3 | | 3 | UNCDX | UDL64 | 69.24 | 108.76 | 35.47 | 72.94 | 10.86 | | | 20.35 | 10.54 | 13.32 | |
| | First Interoffice Transport - Dedicated - DS1 combination - Per Mile Per Month | | | UNC1X | 1L5XX | 0.3562 | | | | | | | | | | |
| | First Interoffice Transport - Dedicated - DS1 combination - Facility Termination Per Month | | | UNC1X | U1TF1 | 77.86 | 171.24 | 113.12 | 70.07 | 30.90 | | | 20.35 | 21.09 | 9.80 | 10.54 |
| | Per each Channel System 1/0 in combination Per Month | | | UNC1X | MQ1 | 80.77 | 105.76 | 14.48 | 3.04 | 2.74 | | | 20.35 | 9.80 | 11.49 | 1.18 |
| | Per each OCU-DP COCI (data) in combination - per month (2.4-64kbs) | | | UNCDX | 1D1DD | 0.91 | 5.70 | 4.42 | | | | | 20.35 | 9.80 | 11.49 | 1.18 |
| | 3/1 Channel System in combination per month | | | UNC3X | MQ3 | 222.98 | 156.02 | 49.41 | 17.12 | 6.77 | | | 20.35 | 9.80 | 11.49 | 1.18 |
| | Per each DS1 COCI in combination per month | | | UNC1X | UC1D1 | 17.58 | 5.70 | 4.42 | | | | | 20.35 | 9.80 | 11.49 | 1.18 |
| | Additional 4-Wire 64Kbps Digital Grade Loop in same DS1 Interoffice Transport Combination - Zone 1 | | 1 | UNCDX | UDL64 | 27.66 | 108.76 | 35.47 | 72.94 | 10.86 | | | 20.35 | 10.54 | 13.32 | |
| | Additional 4-Wire 64Kbps Digital Grade Loop in same DS1 Interoffice Transport Combination - Zone 2 | | 2 | UNCDX | UDL64 | 41.47 | 108.76 | 35.47 | 72.94 | 10.86 | | | 20.35 | 10.54 | 13.32 | |
| | Additional 4-Wire 64Kbps Digital Grade Loop in same DS1 Interoffice Transport Combination - Zone 3 | | 3 | UNCDX | UDL64 | 69.24 | 108.76 | 35.47 | 72.94 | 10.86 | | | 20.35 | 10.54 | 13.32 | |
| | Additional OCU-DP COCI (data) - DS1 to DS0 Channel System combination - per month (2.4-64kbs) | | | UNCDX | 1D1DD | 0.91 | 5.70 | 4.42 | | | | | 20.35 | 9.80 | 11.49 | 1.18 |
| | Each Additional DS1 Interoffice Channel per mile in same 3/1 Channel System per month | | | UNC1X | 1L5XX | 0.3562 | | | | | | | | | | |
| | Each Additional DS1 Interoffice Channel Facility Termination in same 3/1 Channel System per month | | | UNC1X | U1TF1 | 77.86 | 171.24 | 113.12 | 70.07 | 30.90 | | | 20.35 | 9.80 | 11.49 | 1.18 |

| CATEGORY | RATE ELEMENTS | Interim | Zone | BCS | USOC | RATES($) | | | | | Svc Order Submitted Elec per LSR | Svc Order Submitted Manually per LSR | Incremental Charge - Manual Svc Order vs. Electronic-1st | Incremental Charge - Manual Svc Order vs. Electronic-Add'l | Incremental Charge - Manual Svc Order vs. Electronic-Disc 1st | Incremental Charge - Manual Svc Order vs. Electronic-Disc Add'l |
|---|---|---|---|---|---|---|---|---|---|---|---|---|---|---|---|---|
| | | | | | | Rec | Nonrecurring | | Nonrecurring Disconnect | | OSS Rates($) | | | | | |
| | | | | | | | First | Add'l | First | Add'l | SOMEC | SOMAN | SOMAN | SOMAN | SOMAN | SOMAN |
| | Each Additional DS1 COCI in the same 3/1 channel system combination per month | | | UNC1X | UC1D1 | 17.58 | 5.70 | 4.42 | | | | | 20.35 | 9.80 | 11.49 | 1.18 |
| | Wholesale to UNE, Switch-As-Is Charge | | | UNC1X | UNCCC | | 52.73 | 24.62 | 9.12 | 9.12 | | | 31.26 | 10.42 | | |
| | **EXTENDED 2-WIRE ISDN LOOP WITH DS1 INTEROFFICE TRANSPORT w/ 3/1 MUX** | | | | | | | | | | | | | | | |
| | First 2-Wire ISDN Loop in a DS1 Interoffice Combination Transport - Zone 1 | | 1 | UNCNX | U1L2X | 19.77 | 108.76 | 35.47 | 72.94 | 10.86 | | | 20.35 | 21.09 | | |
| | First 2-Wire ISDN Loop in a DS1 Interoffice Combination Transport - Zone 2 | | 2 | UNCNX | U1L2X | 29.63 | 108.76 | 35.47 | 72.94 | 10.86 | | | 20.35 | 21.09 | | |
| | First 2-Wire ISDN Loop in a DS1 Interoffice Combination Transport - Zone 3 | | 3 | UNCNX | U1L2X | 49.47 | 108.76 | 35.47 | 72.94 | 10.86 | | | 20.35 | 21.09 | | |
| | First Interoffice Transport - Dedicated - DS1 combination - Per Mile per month | | | UNC1X | 1L5XX | 0.3562 | | | | | | | | | | |
| | First Interoffice Transport - Dedicated - DS1 combination - Facility Termination per month | | | UNC1X | U1TF1 | 77.86 | 171.24 | 113.12 | 70.07 | 30.90 | | | 20.35 | 21.09 | 9.80 | 10.54 |
| | Per each Channel System 1/0 in combination - per month | | | UNC1X | MQ1 | 80.77 | 105.76 | 14.48 | 3.04 | 2.74 | | | 20.35 | 9.80 | 11.49 | 1.18 |
| | Per each 2-wire ISDN COCI (BRITE) in combination - per month | | | UNCNX | UC1CA | 3.10 | 5.70 | 4.42 | | | | | 20.35 | 9.80 | 11.49 | 1.18 |
| | 3/1 Channel System in combination per month | | | UNC3X | MQ3 | 222.98 | 156.02 | 49.41 | 17.12 | 6.77 | | | 20.35 | 9.80 | 11.49 | 1.18 |
| | Per each DS1 COCI in combination per month | | | UNC1X | UC1D1 | 17.58 | 5.70 | 4.42 | | | | | 20.35 | 9.80 | 11.49 | 1.18 |
| | Additional 2-wire ISDN Loop in same DS1Interoffice Transport Combination - Zone 1 | | 1 | UNCNX | U1L2X | 19.77 | 108.76 | 35.47 | 72.94 | 10.86 | | | 20.35 | 21.09 | | |
| | Additional 2-wire ISDN Loop in same DS1Interoffice Transport Combination - Zone 2 | | 2 | UNCNX | U1L2X | 29.63 | 108.76 | 35.47 | 72.94 | 10.86 | | | 20.35 | 21.09 | | |
| | Additional 2-wire ISDN Loop in same DS1Interoffice Transport Combination - Zone 3 | | 3 | UNCNX | U1L2X | 49.47 | 108.76 | 35.47 | 72.94 | 10.86 | | | 20.35 | 21.09 | | |
| | Additional 2-wire ISDN COCI (BRITE) in same 1/0 channel system combination- per month | | | UNCNX | UC1CA | 3.10 | 5.70 | 4.42 | | | | | 20.35 | 9.80 | 11.49 | 1.18 |
| | Each Additional DS1 Interoffice Channel per mile in same 3/1 Channel System per month | | | UNC1X | 1L5XX | 0.3562 | | | | | | | | | | |
| | Each Additional DS1 Interoffice Channel Facility Termination in same 3/1 Channel System per month | | | UNC1X | U1TF1 | 77.86 | 171.24 | 113.12 | 70.07 | 30.90 | | | 20.35 | 9.80 | 11.49 | 1.18 |
| | Each Additional DS1 COCI in the same 3/1 channel system combination per month | | | UNC1X | UC1D1 | 17.58 | 5.70 | 4.42 | | | | | 20.35 | 9.80 | 11.49 | 1.18 |
| | Wholesale to UNE, Switch-As-Is Charge | | | UNC1X | UNCCC | | 52.73 | 24.62 | 9.12 | 9.12 | | | 31.26 | 10.42 | | |
| | **EXTENDED 4-WIRE DS1 LOOP WITH DEDICATED DS1 INTEROFFICE TRANSPORT w/ 3/1 MUX** | | | | | | | | | | | | | | | |
| | First 4-wire DS1 Digital Lcoal Loop in Combination - Zone 1 | | 1 | UNC1X | USLXX | 51.38 | 228.40 | 161.74 | 79.87 | 24.88 | | | 18.98 | 8.43 | 11.95 | |
| | First 4-wire DS1 Digital Lcoal Loop in Combination - Zone 2 | | 2 | UNC1X | USLXX | 76.98 | 228.40 | 161.74 | 79.87 | 24.88 | | | 18.98 | 8.43 | 11.95 | |
| | First 4-wire DS1 Digital Lcoal Loop in Combination - Zone 3 | | 3 | UNC1X | USLXX | 128.54 | 228.40 | 161.74 | 79.87 | 24.88 | | | 18.98 | 8.43 | 11.95 | |
| | First Interoffice Transport - Dedicated - DS1 combination - Per Mile Per Month | | | UNC1X | 1L5XX | 0.3562 | | | | | | | | | | |
| | First Interoffice Transport - Dedicated - DS1 combination - Facility Termination Per Month | | | UNC1X | U1TF1 | 77.86 | 171.24 | 113.12 | 70.07 | 30.90 | | | 20.35 | 21.09 | 9.80 | 10.54 |
| | 3/1 Channel System in combination per month | | | UNC3X | MQ3 | 222.98 | 156.02 | 49.41 | 17.12 | 6.77 | | | 20.35 | 9.80 | 11.49 | 1.18 |
| | Per each DS1 COCI combination per month | | | UNC1X | UC1D1 | 17.58 | 5.70 | 4.42 | | | | | 20.35 | 9.80 | 11.49 | 1.18 |
| | Each Additional DS1 Interoffice Channel per mile in same 3/1 Channel System per month | | | UNC1X | 1L5XX | 0.3562 | | | | | | | | | | |
| | Each Additional DS1 Interoffice Channel Facility Termination in same 3/1 Channel System per month | | | UNC1X | U1TF1 | 77.86 | 171.24 | 113.12 | 70.07 | 30.90 | | | 20.35 | 21.09 | 9.80 | 10.54 |
| | Each Additional DS1 COCI in the same 3/1 channel system combination per month | | | UNC1X | UC1D1 | 17.58 | 5.70 | 4.42 | | | | | 20.35 | 9.80 | 11.49 | 1.18 |
| | Additional 4-Wire DS1 Digital Local Loop in Combination - Zone 1 | | 1 | UNC1X | USLXX | 51.38 | 228.40 | 161.74 | 79.87 | 24.88 | | | 18.98 | 8.43 | 11.95 | |
| | Additional 4-Wire DS1 Digital Local Loop in Combination - Zone 2 | | 2 | UNC1X | USLXX | 76.98 | 228.40 | 161.74 | 79.87 | 24.88 | | | 18.98 | 8.43 | 11.95 | |
| | Additional 4-Wire DS1 Digital Local Loop in Combination - Zone 3 | | 3 | UNC1X | USLXX | 128.54 | 228.40 | 161.74 | 79.87 | 24.88 | | | 18.98 | 8.43 | 11.95 | |
| | Wholesale to UNE, Switch-As-Is Charge | | | UNC1X | UNCCC | | 52.73 | 24.62 | 9.12 | 9.12 | | | 31.26 | 10.42 | | |
| | **EXTENDED 4-WIRE 56 KBPS DIGITAL EXTENDED LOOP WITH DS0 INTEROFFICE TRANSPORT** | | | | | | | | | | | | | | | |
| | First 4-wire 56 kbps Local Loop in combination - Zone 1 | | 1 | UNCDX | UDL56 | 27.66 | 108.76 | 35.47 | 72.94 | 10.86 | | | 20.35 | 10.54 | 13.32 | |

| CATEGORY | RATE ELEMENTS | Interim | Zone | BCS | USOC | RATES($) | | | | | Svc Order Submitted Elec per LSR | Svc Order Submitted Manually per LSR | Incremental Charge - Manual Svc Order vs. Electronic-1st | Incremental Charge - Manual Svc Order vs. Electronic-Add'l | Incremental Charge - Manual Svc Order vs. Electronic-Disc 1st | Incremental Charge - Manual Svc Order vs. Electronic-Disc Add'l |
|---|---|---|---|---|---|---|---|---|---|---|---|---|---|---|---|---|
| | | | | | | Rec | Nonrecurring | | Nonrecurring Disconnect | | OSS Rates($) | | | | | |
| | | | | | | | First | Add'l | First | Add'l | SOMEC | SOMAN | SOMAN | SOMAN | SOMAN | SOMAN |
| | First 4-wire 56 kbps Local Loop in combination - Zone 2 | | 2 | UNCDX | UDL56 | 41.47 | 108.76 | 35.47 | 72.94 | 10.86 | | | 20.35 | 10.54 | 13.32 | |
| | First 4-wire 56 kbps Local Loop in combination - Zone 3 | | 3 | UNCDX | UDL56 | 69.24 | 108.76 | 35.47 | 72.94 | 10.86 | | | 20.35 | 10.54 | 13.32 | |
| | First 4-wiree 56 kbps Interoffice Transport - Dedicated - Per Mile per month | | | UNCDX | 1L5XX | 0.0174 | | | | | | | | | | |
| | First 4-wire 56 kbps Interoffice Transport - Dedicated - Facility Termination per month | | | UNCDX | U1TD5 | 17.98 | 79.83 | 44.08 | 69.32 | 31.00 | | | 20.35 | 21.09 | 9.80 | 10.54 |
| | Wholesale to UNE, Switch-As-Is Charge | | | UNCDX | UNCCC | | 52.73 | 24.62 | 9.12 | 9.12 | | | 31.26 | 10.42 | | |
| | **EXTENDED 4-WIRE 64 KBPS DIGITAL EXTENDED LOOP WITH DS0 INTEROFFICE TRANSPORT** | | | | | | | | | | | | | | | |
| | First 4-wire 64 kbps Local Loop in combination - Zone 1 | | 1 | UNCDX | UDL64 | 27.66 | 108.76 | 35.47 | 72.94 | 10.86 | | | 20.35 | 10.54 | 13.32 | |
| | First 4-wire 64 kbps Local Loop in combination - Zone 2 | | 2 | UNCDX | UDL64 | 41.47 | 108.76 | 35.47 | 72.94 | 10.86 | | | 20.35 | 10.54 | 13.32 | |
| | First 4-wire 64 kbps Local Loop in combination - Zone 3 | | 3 | UNCDX | UDL64 | 69.24 | 108.76 | 35.47 | 72.94 | 10.86 | | | 20.35 | 10.54 | 13.32 | |
| | First I4-wire 65 kbps Interoffice Transport - Dedicated - Per Mile per month | | | UNCDX | 1L5XX | 0.0174 | | | | | | | | | | |
| | First 4-wire 64 kbps Interoffice Transport - Dedicated - Facility Termination per month | | | UNCDX | U1TD6 | 17.98 | 79.83 | 44.08 | 69.32 | 31.00 | | | 20.35 | 21.09 | 9.80 | 10.54 |
| | Wholesale to UNE, Switch-As-Is Charge | | | UNCDX | UNCCC | | 52.73 | 24.62 | 9.12 | 9.12 | | | 31.26 | 10.42 | | |
| **ADDITIONAL NETWORK ELEMENTS** | | | | | | | | | | | | | | | | |
| | **When used as a part of a currently combined facility, the non-recurrng charges do not apply, but a Switch As Is charge does apply.** | | | | | | | | | | | | | | | |
| | **When used as ordinarily combined network elements in All States, the non-recurring charges apply and the Switch As Is Charge does not.** | | | | | | | | | | | | | | | |
| | **Nonrecurring Currently Combined Network Elements "Switch As Is" Charge** | | | | | | | | | | | | | | | |
| | Wholesale to UNE, Switch-As-Is Conversion Charge, 2/4-wire VG | | | UNCVX | UNCCC | | 52.73 | 24.62 | 9.12 | 9.12 | | | 31.26 | 10.42 | | |
| | Wholesale to UNE, Switch-As-Is Conversion Charge, 4-wire VG | | | UNCDX | UNCCC | | 52.73 | 24.62 | 9.12 | 9.12 | | | 31.26 | 10.42 | | |
| | Wholesale to UNE, Switch-As-Is Conversion Charge, DS1 | | | UNC1X | UNCCC | | 52.73 | 24.62 | 9.12 | 9.12 | | | 53.73 | 24.62 | | |
| | Wholesale to UNE, Switch-As-Is Conversion Charge, DS3 | | | UNC3X | UNCCC | | 52.73 | 24.62 | 9.12 | 9.12 | | | 53.73 | 24.62 | | |
| | Wholesale to UNE, Switch-As-Is Conversion Charge, STS-1 | | | UNCSX | UNCCC | | 52.73 | 24.62 | 9.12 | 9.12 | | | 53.73 | 24.62 | | |
| | **Optional Features & Functions:** | | | | | | | | | | | | | | | |
| | Clear Channel Capability Extended Frame Option - per DS1 | I | | U1TD1, ULDD1,UNC1X | CCOEF | | 0.00 | 0.00 | 0.00 | 0.00 | | | | | | |
| | Clear Channel Capability Super FrameOption - per DS1 | i | | U1TD1, ULDD1,UNC1X | CCOSF | | 0.00 | 0.00 | 0.00 | 0.00 | | | | | | |
| | Clear Channel Capability (SF/ESF) Option - Subsequent Activity - per DS1 | I | | ULDD1, U1TD1, UNC1X, USL | NRCCC | | 185.16 | 23.86 | 2.03 | 0.79 | | | 45.68 | 1.76 | 21.75 | 1.76 |
| | C-bit Parity Option - Subsequent Activity - per DS3 | i | | U1TD3, ULDD3, UE3, UNC3X | NRCC3 | | 219.46S | 7.68S | .7637S | 0.00S | | | 45.68 | 1.76 | 21.75 | 1.76 |
| | **MULTIPLEXER Interfaces** | | | | | | | | | | | | | | | |
| | DS1 to DS0 Channel System per month | | | UNC1X | MQ1 | 80.77 | 105.76 | 14.48 | 3.04 | 2.74 | | | 20.35 | 9.80 | 11.49 | 1.18 |
| | Wholesale to UNE, Switch-As-Is Conversion Charge, 1/0 Channel System | | | UNCVX | UNCCC | | 52.73 | 24.62 | 9.12 | 9.12 | | | 31.26 | 10.42 | | |
| | OCU-DP COCI (data) - DS1 to DS0 Channel System - per month (2.4-64kbs) used for a Local Loop | | | UDL | 1D1DD | 1.82 | 6.07 | 4.66 | | | | | 20.35 | 9.80 | 11.49 | 1.18 |
| | OCU-DP COCI (data) - DS1 to DS0 Channel System - per month (2.4-64kbs) used for connection to a channelized DS1 Local Channel in the same SWC as collocation | | | U1TUD | 1D1DD | 1.82 | 6.07 | 4.66 | | | | | 20.35 | 9.80 | 11.49 | 1.18 |
| | 2-wire ISDN COCI (BRITE) - DS1 to DS0 Channel System - per month for a Local Loop | | | UDN | UC1CA | 3.10 | 6.07 | 4.66 | | | | | 20.35 | 9.80 | 11.49 | 1.18 |
| | 2-wire ISDN COCI (BRITE) - DS1 to DS0 Channel System - per month used for connection to a channelized DS1 Local Channel in the same SWC as collocation | | | U1TUB | UC1CA | 3.10 | 6.07 | 4.66 | | | | | 20.35 | 9.80 | 11.49 | 1.18 |
| | Voice Grade COCI - DS1 to DS0 Channel System - per month used for a Local Loop | | | UEA | 1D1VG | 0.91 | 6.07 | 4.66 | | | | | 20.35 | 9.80 | 11.49 | 1.18 |
| | Voice Grade COCI - DS1 to DS0 Channel System - per month used for connection to a channelized DS1 Local Channel in the same SWC as collocation | | | U1TUC | 1D1VG | 0.91 | 6.07 | 4.66 | | | | | 20.35 | 9.80 | 11.49 | 1.18 |
| | DS3 to DS1 Channel System per month | | | UNC3X | MQ3 | 222.98 | 156.02 | 49.41 | 17.12 | 6.77 | | | 20.35 | 9.80 | 11.49 | 1.18 |
| | Wholesale to UNE, Switch-As-Is Conversion Charge, 3/1 Channel System | | | UNC3X | UNCCC | | 52.73 | 24.62 | 9.12 | 9.12 | | | 31.26 | 10.42 | | |
| | STS-1 to DS1 Channel System per month | | | UNCSX | MQ3 | 222.98 | 156.02 | 49.41 | 17.12 | 6.77 | | | 20.35 | 9.80 | 11.49 | 1.18 |

| UNBUNDLED NETWORK ELEMENTS - Tennessee | | | | | | | | | | | | | | Attachment: 2 Exh. A | | | |
|---|---|---|---|---|---|---|---|---|---|---|---|---|---|---|---|---|---|
| CATEGORY | | RATE ELEMENTS | Interim | Zone | BCS | USOC | RATES($) | | | | | Svc Order Submitted Elec per LSR | Svc Order Submitted Manually per LSR | Incremental Charge - Manual Svc Order vs. Electronic-1st | Incremental Charge - Manual Svc Order vs. Electronic-Add'l | Incremental Charge - Manual Svc Order vs. Electronic-Disc 1st | Incremental Charge - Manual Svc Order vs. Electronic-Disc Add'l |
| | | | | | | | Rec | Nonrecurring | | Nonrecurring Disconnect | | OSS Rates($) | | | | | |
| | | | | | | | | First | Add'l | First | Add'l | SOMEC | SOMAN | SOMAN | SOMAN | SOMAN | SOMAN |
| | | Wholesale to UNE, Switch-As-Is Conversion Charge, 3/1 Channel System | | | UNCSX | UNCCC | | 52.73 | 24.62 | 9.12 | 9.12 | | | 31.26 | 10.42 | | |
| | | DS1 COCI used with Loop per month | | | USL | UC1D1 | 17.58 | 6.07 | 4.66 | | | | | 20.35 | 9.80 | 11.49 | 1.18 |
| | | DS1 COCI (used for connection to a channelized DS1 Local Channel in the same SWC as collocation) per month | | | U1TUA | UC1D1 | 17.58 | 6.07 | 4.66 | | | | | 20.35 | 9.80 | 11.49 | 1.18 |
| | | DS1 COCI used with Interoffice Channel per month | | | U1TD1 | UC1D1 | 17.58 | 6.07 | 4.66 | | | | | 20.35 | 9.80 | 11.49 | 1.18 |
| | | DS3 Interface Unit (DS1 COCI) used with Local Channel per month | | | ULDD1 | UC1D1 | 17.58 | 6.07 | 4.66 | | | | | 20.35 | 9.80 | 11.49 | 1.18 |
| | **Access to DCS - Customer Reconfiguration (FlexServ)** | | | | | | | | | | | | | | | | |
| | | Customer Reconfiguration Establishment | | | | | | 2.78 | | 3.32 | | | | 20.35 | 10.54 | | |
| | | DS1 DSC Termination with DS0 Switching | | | | | 23.35 | 41.14 | 34.25 | 29.94 | 24.08 | | | 45.68 | 1.76 | | |
| | | DS1 DSC Termination with DS1 Switching | | | | | 13.45 | 27.79 | 20.90 | 21.99 | 16.12 | | | 45.68 | 1.76 | | |
| | | DS3 DSC Termination with DS1 Switching | | | | | 150.88 | 41.14 | 34.25 | 29.94 | 24.08 | | | 45.68 | 1.76 | | |
| | **Service Rearrangements** | | | | | | | | | | | | | | | | |
| | | NRC - Change in Facility Assignment per circuit Service Rearrangement | I | | U1TVX, U1TDX, UEA, UDL, U1TUC, U1TUD, U1TUB, ULDVX, ULDDX, UNCVX, UNCDX | URETD | | 270.55 | 47.21 | | | | | 45.68 | 1.76 | | |
| | | NRC - Change in Facility Assignment per circuit Project Management (added to CFA per circuit if project managed) | I | | U1TVX, U1TDX, UEA, UDL, U1TUC, U1TUD, U1TUB, ULDVX, ULDDX, UNCVX, UNCDX | URETB | | 1.28 | 1.28 | | | | | 45.68 | 1.76 | | |
| | **Miscellaneous** | | | | | | | | | | | | | | | | |
| | | NRC - Order Coordination Specific Time - Dedicated Transport | I | | UNC1X | OCOSR | | 18.93 | 18.93 | | | | | | | | |

| UNBUNDLED NETWORK ELEMENTS - Alabama | | | | | | | | | | | | | | Attachment: 2 Exh. B | | | |
|---|---|---|---|---|---|---|---|---|---|---|---|---|---|---|---|---|---|
| CATEGORY | | RATE ELEMENTS | Interim | Zone | BCS | USOC | RATES ($) | | | | | Svc Order Submitted Elec per LSR | Svc Order Submitted Manually per LSR | Incremental Charge - Manual Svc Order vs. Electronic-1st | Incremental Charge - Manual Svc Order vs. Electronic-Add'l | Incremental Charge - Manual Svc Order vs. Electronic-Disc 1st | Incremental Charge - Manual Svc Order vs. Electronic-Disc Add'l |
| | | | | | | | Rec | Nonrecurring | | Nonrecurring Disconnect | | OSS Rates ($) | | | | | |
| | | | | | | | | First | Add'l | First | Add'l | SOMEC | SOMAN | SOMAN | SOMAN | SOMAN | SOMAN |
| | | | | | | | | | | | | | | | | | |
| UNBUNDLED EXCHANGE ACCESS LOOP | | | | | | | | | | | | | | | | | |
| | 2-WIRE HIGH BIT RATE DIGITAL SUBSCRIBER LINE (HDSL) COMPATIBLE LOOP | | | | | | | | | | | | | | | | |
| | | 2 Wire Unbundled HDSL Loop including manual service inquiry & facility reservation - Zone 1 | | 1 | UHL | UHL2X | 10.05 | | | | | | | | | | |
| | | 2 Wire Unbundled HDSL Loop including manual service inquiry & facility reservation - Zone 2 | | 2 | UHL | UHL2X | 11.70 | | | | | | | | | | |
| | | 2 Wire Unbundled HDSL Loop including manual service inquiry & facility reservation - Zone 3 | | 3 | UHL | UHL2X | 13.16 | | | | | | | | | | |
| | | 2 Wire Unbundled HDSL Loop without manual service inquiry and facility reservation - Zone 1 | | 1 | UHL | UHL2W | 10.05 | | | | | | | | | | |
| | | 2 Wire Unbundled HDSL Loop without manual service inquiry and facility reservation - Zone 2 | | 2 | UHL | UHL2W | 11.70 | | | | | | | | | | |
| | | 2 Wire Unbundled HDSL Loop without manual service inquiry and facility reservation - Zone 3 | | 3 | UHL | UHL2W | 13.16 | | | | | | | | | | |
| | 4-WIRE HIGH BIT RATE DIGITAL SUBSCRIBER LINE (HDSL) COMPATIBLE LOOP | | | | | | | | | | | | | | | | |
| | | 4 Wire Unbundled HDSL Loop including manual service inquiry and facility reservation - Zone 1 | | 1 | UHL | UHL4X | 16.04 | | | | | | | | | | |
| | | 4-Wire Unbundled HDSL Loop including manual service inquiry and facility reservation - Zone 2 | | 2 | UHL | UHL4X | 17.89 | | | | | | | | | | |
| | | 4-Wire Unbundled HDSL Loop including manual service inquiry and facility reservation - Zone 3 | | 3 | UHL | UHL4X | 17.54 | | | | | | | | | | |
| | | 4-Wire Unbundled HDSL Loop without manual service inquiry and facility reservation - Zone 1 | | 1 | UHL | UHL4W | 16.04 | | | | | | | | | | |
| | | 4-Wire Unbundled HDSL Loop without manual service inquiry and facility reservation - Zone 2 | | 2 | UHL | UHL4W | 17.89 | | | | | | | | | | |
| | | 4-Wire Unbundled HDSL Loop without manual service inquiry and facility reservation - Zone 3 | | 3 | UHL | UHL4W | 17.54 | | | | | | | | | | |
| | 4-WIRE DS1 DIGITAL LOOP | | | | | | | | | | | | | | | | |
| | | 4-Wire DS1 Digital Loop - Zone 1 | | 1 | USL | USLXX | 94.93 | | | | | | | | | | |
| | | 4-Wire DS1 Digital Loop - Zone 2 | | 2 | USL | USLXX | 177.31 | | | | | | | | | | |
| | | 4-Wire DS1 Digital Loop - Zone 3 | | 3 | USL | USLXX | 361.70 | | | | | | | | | | |
| HIGH CAPACITY UNBUNDLED LOCAL LOOP | | | | | | | | | | | | | | | | | |
| | | High Capacity Unbundled Local Loop - DS3 - Per Mile per month | | | UE3 | 1L5ND | 9.64 | | | | | | | | | | |
| | | High Capacity Unbundled Local Loop - DS3 - Facility Termination per month | | | UE3 | UE3PX | 355.33 | | | | | | | | | | |
| | | High Capacity Unbundled Local Loop - STS-1 - Per Mile per month | | | UDLSX | 1L5ND | 9.64 | | | | | | | | | | |
| | | High Capacity Unbundled Local Loop - STS-1 - Facility Termination per month | | | UDLSX | UDLS1 | 367.80 | | | | | | | | | | |
| UNBUNDLED DEDICATED TRANSPORT | | | | | | | | | | | | | | | | | |
| | INTEROFFICE CHANNEL - DEDICATED TRANSPORT | | | | | | | | | | | | | | | | |
| | | Interoffice Channel - Dedicated Channel - DS1 - Per Mile per month | | | U1TD1 | 1L5XX | 0.21 | | | | | | | | | | |
| | | Interoffice Channel - Dedicated Tranport - DS1 - Facility Termination | | | U1TD1 | U1TF1 | 69.18 | | | | | | | | | | |
| | | Interoffice Channel - Dedicated Transport - DS3 - Per Mile per month | | | U1TD3 | 1L5XX | 4.70 | | | | | | | | | | |
| | | Interoffice Channel - Dedicated Transport - DS3 - Facility Termination per month | | | U1TD3 | U1TF3 | 809.05 | | | | | | | | | | |
| | | Interoffice Channel - Dedicated Transport - STS-1 - Per Mile per month | | | U1TS1 | 1L5XX | 4.70 | | | | | | | | | | |
| | | Interoffice Channel - Dedicated Transport - STS-1 - Facility Termination | | | U1TS1 | U1TFS | 806.58 | | | | | | | | | | |
| | | Local Channel - Dedicated - 2-Wire Voice Grade | | | ULDVX, UNCVX | ULDV2 | 16.07 | | | | | | | | | | |
| | | Local Channel - Dedicated - 2-Wire Voice Grade Rev Bat | | | ULDVX | ULDR2 | 16.07 | | | | | | | | | | |
| | | Local Channel - Dedicated - 4-Wire Voice Grade | | | ULDVX, UNCVX | ULDV4 | 17.17 | | | | | | | | | | |
| | | Local Channel - Dedicated - DS1 - Zone 1 | | 1 | ULDD1, UNC1X | ULDF1 | 41.12 | | | | | | | | | | |

## UNBUNDLED NETWORK ELEMENTS - Alabama

Attachment: 2 Exh. B

| CATEGORY | RATE ELEMENTS | Interim | Zone | BCS | USOC | RATES ($) Rec | Nonrecurring First | Nonrecurring Add'l | Nonrecurring Disconnect First | Nonrecurring Disconnect Add'l | Svc Order Submitted Elec per LSR | Svc Order Submitted Manually per LSR | Incremental Charge - Manual Svc Order vs. Electronic- 1st | Incremental Charge - Manual Svc Order vs. Electronic- Add'l | Incremental Charge - Manual Svc Order vs. Electronic- Disc 1st | Incremental Charge - Manual Svc Order vs. Electronic- Disc Add'l |
|---|---|---|---|---|---|---|---|---|---|---|---|---|---|---|---|---|
| | | | | | | | | | | | OSS Rates ($) | | | | | |
| | | | | | | | | | | | SOMEC | SOMAN | SOMAN | SOMAN | SOMAN | SOMAN |
| | Local Channel - Dedicated - DS1 - Zone 2 | | 2 | ULDD1, UNC1X | ULDF1 | 57.48 | | | | | | | | | | |
| | Local Channel - Dedicated - DS1 - Zone 3 | | 3 | ULDD1, UNC1X | ULDF1 | 123.77 | | | | | | | | | | |
| | Local Channel - Dedicated - DS3 - Per Mile per month | | | ULDD3, UNC3X | 1L5NC | 7.96 | | | | | | | | | | |
| | Local Channel - Dedicated - DS3 - Facility Termination | | | ULDD3, UNC3X | ULDF3 | 479.02 | | | | | | | | | | |
| | Local Channel - Dedicated - STS-1- Per Mile per month | | | ULDS1, UNCSX | 1L5NC | 7.96 | | | | | | | | | | |
| | Local Channel - Dedicated - STS-1 - Facility Termination | | | ULDS1, UNCSX | ULDFS | 469.76 | | | | | | | | | | |
| **ENHANCED EXTENDED LINK (EELs)** | | | | | | | | | | | | | | | | |
| | **NOTE: The monthly recurring and non-recurring charges below will apply and the Switch-As-Is Charge will not apply for UNE combinations provisioned as ' Ordinarily Combined' Network Elements.** | | | | | | | | | | | | | | | |
| | **NOTE: The monthly recurring and the Switch-As-Is Charge and not the non-recurring charges below will apply for UNE combinations provisioned as ' Currently Combined' Network Elements.** | | | | | | | | | | | | | | | |
| | **2-WIRE VOICE GRADE LOOP FOR USE IN A COMBINATION** | | | | | | | | | | | | | | | |
| | 2-Wire VG Loop (SL2) in Combination - Zone 1 | | 1 | UNCVX | UEAL2 | 16.54 | | | | | | | | | | |
| | 2-Wire VG Loop (SL2) in Combination - Zone 2 | | 2 | UNCVX | UEAL2 | 26.28 | | | | | | | | | | |
| | 2-Wire VG Loop (SL2) in Combination - Zone 3 | | 3 | UNCVX | UEAL2 | 41.56 | | | | | | | | | | |
| | Voice Grade COCI - Per Month | | | UNCVX | 1D1VG | 0.61 | | | | | | | | | | |
| | **4-WIRE VOICE GRADE LOOP FOR USE IN A COMBINATION** | | | | | | | | | | | | | | | |
| | 4-Wire Analog Voice Grade Loop in Combination - Zone 1 | | 1 | UNCVX | UEAL4 | 29.14 | | | | | | | | | | |
| | 4-Wire Analog Voice Grade Loop in Combination - Zone 2 | | 2 | UNCVX | UEAL4 | 44.37 | | | | | | | | | | |
| | 4-Wire Analog Voice Grade Loop in Combination - Zone 3 | | 3 | UNCVX | UEAL4 | 69.02 | | | | | | | | | | |
| | Voice Grade COCI in combination - per month | | | UNCVX | 1D1VG | 0.61 | | | | | | | | | | |
| | **4-WIRE 56 KBPS DIGITAL LOOP FOR USE IN A COMBINATION** | | | | | | | | | | | | | | | |
| | 4-Wire 56Kbps Digital Grade Loop in Combination - Zone 1 | | 1 | UNCDX | UDL56 | 30.00 | | | | | | | | | | |
| | 4-Wire 56Kbps Digital Grade Loop in Combination - Zone 2 | | 2 | UNCDX | UDL56 | 41.34 | | | | | | | | | | |
| | 4-Wire 56Kbps Digital Grade Loop in Combination - Zone 3 | | 3 | UNCDX | UDL56 | 43.56 | | | | | | | | | | |
| | OCU-DP COCI (data) per month (2.4-64kbs) | | | UNCDX | 1D1DD | 1.29 | | | | | | | | | | |
| | **4-WIRE 64 KBPS DIGITAL LOOP FOR USE IN A COMBINATI\ON** | | | | | | | | | | | | | | | |
| | 4-Wire 64Kbps Digital Grade Loop in Combination - Zone 1 | | 1 | UNCDX | UDL64 | 30.00 | | | | | | | | | | |
| | 4-Wire 64Kbps Digital Grade Loop in Combination - Zone 2 | | 2 | UNCDX | UDL64 | 41.34 | | | | | | | | | | |
| | 4-Wire 64Kbps Digital Grade Loop in Combination - Zone 3 | | 3 | UNCDX | UDL64 | 43.56 | | | | | | | | | | |
| | OCU-DP COCI (data) - in combination - per month (2.4-64kbs) | | | UNCDX | 1D1DD | 1.29 | | | | | | | | | | |
| | **2-WIRE ISDN LOOP FOR USE IN COMBINATION** | | | | | | | | | | | | | | | |
| | 2-Wire ISDN Loop in Combination - Zone 1 | | 1 | UNCNX | U1L2X | 25.16 | | | | | | | | | | |
| | 2-Wire ISDN Loop in Combination - Zone 2 | | 2 | UNCNX | U1L2X | 37.78 | | | | | | | | | | |
| | 2-Wire ISDN Loop in Combination - Zone 3 | | 3 | UNCNX | U1L2X | 55.83 | | | | | | | | | | |
| | 2-wire ISDN COCI (BRITE) - in combination - per month | | | UNCNX | UC1CA | 2.77 | | | | | | | | | | |
| | **4-WIRE DS1 DIGITAL LOOP FOR USE IN A COMBINATION** | | | | | | | | | | | | | | | |
| | 4-Wire DS1 Digital Loop in Combination - Zone 1 | | 1 | UNC1X | USLXX | 94.93 | | | | | | | | | | |
| | 4-Wire DS1 Digital Loop in Combination - Zone 2 | | 2 | UNC1X | USLXX | 177.31 | | | | | | | | | | |
| | 4-Wire DS1 Digital Loop in Combination - Zone 3 | | 3 | UNC1X | USLXX | 361.70 | | | | | | | | | | |
| | DS1 COCI in combination per month | | | UNC1X | UC1D1 | 14.60 | | | | | | | | | | |
| | **2 WIRE VOICE GRADE INTEROFFICE TRANSPORT FOR USE IN A COMBINATION** | | | | | | | | | | | | | | | |
| | Interoffice Transport - 2-wire VG - Dedicated- Per Mile Per Month | | | UNCVX | 1L5XX | 0.01 | | | | | | | | | | |
| | Interoffice Transport - 2-wire VG - Dedicated - Facility Termination per month | | | UNCVX | U1TV2 | 24.30 | | | | | | | | | | |
| | **4 WIRE VOICE GRADE INTEROFFICE TRANSPORT FOR USE IN A COMBINATION** | | | | | | | | | | | | | | | |
| | Interoffice Transport - 4-wire VG - Dedicated - Per Mile Per Month | | | UNCVX | 1L5XX | 0.01 | | | | | | | | | | |
| | Interoffice Transport - 4-wire VG - Dedicated - Facility Termination per month | | | UNCVX | U1TV4 | 21.54 | | | | | | | | | | |
| | **DS1 INTEROFFICE TRANSPORT FOR COMBINATION** | | | | | | | | | | | | | | | |
| | Interoffice Transport - Dedicated - DS1 combination - Per Mile per month | | | UNC1X | 1L5XX | 0.21 | | | | | | | | | | |
| | Interoffice Transport - Dedicated - DS1 combination - Facility Termination per month | | | UNC1X | U1TF1 | 69.18 | | | | | | | | | | |
| | **DS3 INTEROFFICE TRANSPORT FOR USE IN A COMBINATION** | | | | | | | | | | | | | | | |
| | Interoffice Transport - Dedicated - DS3 combination - Per Mile Per Month | | | UNC3X | 1L5XX | 4.70 | | | | | | | | | | |

| CATEGORY | RATE ELEMENTS | Interim | Zone | BCS | USOC | RATES ($) | | | | | Svc Order Submitted Elec per LSR | Svc Order Submitted Manually per LSR | Incremental Charge - Manual Svc Order vs. Electronic-1st | Incremental Charge - Manual Svc Order vs. Electronic-Add'l | Incremental Charge - Manual Svc Order vs. Electronic-Disc 1st | Incremental Charge - Manual Svc Order vs. Electronic-Disc Add'l |
|---|---|---|---|---|---|---|---|---|---|---|---|---|---|---|---|---|
| | | | | | | Rec | Nonrecurring | | Nonrecurring Disconnect | | OSS Rates ($) | | | | | |
| | | | | | | | First | Add'l | First | Add'l | SOMEC | SOMAN | SOMAN | SOMAN | SOMAN | SOMAN |
| | Interoffice Transport - Dedicated - DS3 - Facility Termination per month | | | UNC3X | U1TF3 | 809.05 | | | | | | | | | | |
| | **STS-1 INTEROFFICE TRANSPORT FOR USE IN COMBINATION** | | | | | | | | | | | | | | | |
| | Interoffice Transport - Dedicated - STS-1 combination - Per Mile Per Month | | | UNCSX | 1L5XX | 4.70 | | | | | | | | | | |
| | Interoffice Transport - Dedicated - STS-1 combination - Facility Termination per month | | | UNCSX | U1TFS | 806.58 | | | | | | | | | | |
| | **4-WIRE 56 KBPS DIGITAL LOOP WITH 56 KBPS INTEROFFICE TRANSPORT** | | | | | | | | | | | | | | | |
| | 4-wire 56 kbps Local Loop in combination - Zone 1 | | 1 | UNCDX | UDL56 | 30.00 | | | | | | | | | | |
| | 4-wire 56 kbps Local Loop in combination - Zone 2 | | 2 | UNCDX | UDL56 | 41.34 | | | | | | | | | | |
| | 4-wire 56 kbps Local Loop in combination - Zone 3 | | 3 | UNCDX | UDL56 | 43.56 | | | | | | | | | | |
| | Interoffice Transport - Dedicated - 4-wire 56 kbps combination - Per Mile per month | | | UNCDX | 1L5XX | 0.01 | | | | | | | | | | |
| | Interoffice Transport - Dedicated - 4-wire 56 kbps combination - Facility Termination per month | | | UNCDX | U1TD5 | 17.39 | | | | | | | | | | |
| | **4-WIRE 64 KBPS DIGITAL EXTENDED LOOP WITH 64 KBPS INTEROFFICE TRANSPORT** | | | | | | | | | | | | | | | |
| | 4-wire 64 kbps Lcoal Loop in Combination - Zone 1 | | 1 | UNCDX | UDL64 | 30.00 | | | | | | | | | | |
| | 4-wire 64 kbps Lcoal Loop in Combination - Zone 2 | | 2 | UNCDX | UDL64 | 41.34 | | | | | | | | | | |
| | 4-wire 64 kbps Lcoal Loop in Combination - Zone 3 | | 3 | UNCDX | UDL64 | 43.56 | | | | | | | | | | |
| | Interoffice Transport - Dedicated - 4-wire 64 kbps combination - Per Mile per month | | | UNCDX | 1L5XX | 0.01 | | | | | | | | | | |
| | Interoffice Transport - Dedicated - 4-wire 64 kbps combination - Facility Termination per month | | | UNCDX | U1TD6 | 17.39 | | | | | | | | | | |
| | **4-WIRE 56 KBPS DIGITAL EXTENDED LOOP WITH DS0 INTEROFFICE TRANSPORT** | | | | | | | | | | | | | | | |
| | 4-wire 56 kbps Local Loop in combination - Zone 1 | | 1 | UNCDX | UDL56 | 30.00 | | | | | | | | | | |
| | 4-wire 56 kbps Local Loop in combination - Zone 2 | | 2 | UNCDX | UDL56 | 41.34 | | | | | | | | | | |
| | 4-wire 56 kbps Local Loop in combination - Zone 3 | | 3 | UNCDX | UDL56 | 43.56 | | | | | | | | | | |
| | 4-wiree 56 kbps Interoffice Transport - Dedicated - Per Mile per month | | | UNCDX | 1L5XX | 0.01 | | | | | | | | | | |
| | 4-wire 56 kbps Interoffice Transport - Dedicated - Facility Termination per month | | | UNCDX | U1TD5 | 17.39 | | | | | | | | | | |
| | **4-WIRE 64 KBPS DIGITAL EXTENDED LOOP WITH DS0 INTEROFFICE TRANSPORT** | | | | | | | | | | | | | | | |
| | 4-wire 64 kbps Local Loop in combination - Zone 1 | | 1 | UNCDX | UDL64 | 30.00 | | | | | | | | | | |
| | 4-wire 64 kbps Local Loop in combination - Zone 2 | | 2 | UNCDX | UDL64 | 41.34 | | | | | | | | | | |
| | 4-wire 64 kbps Local Loop in combination - Zone 3 | | 3 | UNCDX | UDL64 | 43.56 | | | | | | | | | | |
| | I4-wire 65 kbps Interoffice Transport - Dedicated - Per Mile per month | | | UNCDX | 1L5XX | 0.01 | | | | | | | | | | |
| | 4-wire 64 kbps Interoffice Transport - Dedicated - Facility Termination per month | | | UNCDX | U1TD6 | 17.39 | | | | | | | | | | |
| | **DS1 DIGITAL LOOP AND DS1 INTERFOFFICE TRANSPORT** | | | | | | | | | | | | | | | |
| | 4-Wire DS1 Digital Loop in Combination - Zone 1 | | 1 | UNC1X | USLXX | 94.93 | | | | | | | | | | |
| | 4-Wire DS1 Digital Loop in Combination - Zone 2 | | 2 | UNC1X | USLXX | 177.31 | | | | | | | | | | |
| | 4-Wire DS1 Digital Loop in Combination - Zone 3 | | 3 | UNC1X | USLXX | 361.70 | | | | | | | | | | |
| | Interoffice Transport - Dedicated - DS1 combination - Per Mile per month | | | UNC1X | 1L5XX | 0.21 | | | | | | | | | | |
| | Interoffice Transport - Dedicated - DS1 combination - Facility Termination per month | | | UNC1X | U1TF1 | 69.18 | | | | | | | | | | |
| | **DS3 DIGITAL LOOP WITH DEDICATED DS3 INTEROFFICE TRANSPORT** | | | | | | | | | | | | | | | |
| | DS3 Local Loop in combination - per mile per month | | | UNC3X | 1L5ND | 11.08 | | | | | | | | | | |
| | DS3 Local Loop in combination - Facility Termination per month | | | UNC3X | UE3PX | 408.63 | | | | | | | | | | |
| | Interoffice Transport - Dedicated - DS3 - Per Mile per month | | | UNC3X | 1L5XX | 4.70 | | | | | | | | | | |
| | Interoffice Transport - Dedicated - DS3 combination - Facility Termination per month | | | UNC3X | U1TF3 | 809.05 | | | | | | | | | | |
| | **STS-1 DIGITAL LOOP WITH DEDICATED STS-1 INTEROFFICE TRANSPORT** | | | | | | | | | | | | | | | |
| | STS-1 Local Lolp in combination - per mile per month | | | UNCSX | 1L5ND | 11.08 | | | | | | | | | | |
| | STS-1 Local Loop in combination - Facility Termination per month | | | UNCSX | UDLS1 | 422.98 | | | | | | | | | | |

| UNBUNDLED NETWORK ELEMENTS - Alabama | | | | | | | | | | | | | | Attachment: 2 Exh. B | | | |
|---|---|---|---|---|---|---|---|---|---|---|---|---|---|---|---|---|---|
| CATEGORY | | RATE ELEMENTS | Interim | Zone | BCS | USOC | RATES ($) | | | | | Svc Order Submitted Elec per LSR | Svc Order Submitted Manually per LSR | Incremental Charge - Manual Svc Order vs. Electronic-1st | Incremental Charge - Manual Svc Order vs. Electronic-Add'l | Incremental Charge - Manual Svc Order vs. Electronic-Disc 1st | Incremental Charge - Manual Svc Order vs. Electronic-Disc Add'l |
| | | | | | | | Rec | Nonrecurring | | Nonrecurring Disconnect | | OSS Rates ($) | | | | | |
| | | | | | | | | First | Add'l | First | Add'l | SOMEC | SOMAN | SOMAN | SOMAN | SOMAN | SOMAN |
| | | Interoffice Transport - Dedicated - STS-1 combination - per mile per month | | | UNCSX | 1L5XX | 4.70 | | | | | | | | | | |
| | | Interoffice Transport - Dedicated - STS-1 combination - Facility Termination per month | | | UNCSX | U1TFS | 806.58 | | | | | | | | | | |
| **ADDITIONAL NETWORK ELEMENTS** | | | | | | | | | | | | | | | | | |
| | **When used as a part of a currently combined facility, the non-recurrng charges do not apply, but a Switch As Is charge does apply.** | | | | | | | | | | | | | | | | |
| | **When used as ordinarily combined network elements in All States, the non-recurring charges apply and the Switch As Is Charge does not.** | | | | | | | | | | | | | | | | |
| | **Nonrecurring Currently Combined Network Elements "Switch As Is" Charge (One applies to each combination)** | | | | | | | | | | | | | | | | |
| | **Optional Features & Functions:** | | | | | | | | | | | | | | | | |
| | | Clear Channel Capability Extended Frame Option - per DS1 | I | | U1TD1, ULDD1,UNC1X | CCOEF | | 0.00 | 0.00 | 0.00 | 0.00 | | | | | | |
| | | Clear Channel Capability Super FrameOption - per DS1 | I | | U1TD1, ULDD1,UNC1X | CCOSF | | 0.00 | 0.00 | 0.00 | 0.00 | | | | | | |
| | | Clear Channel Capability (SF/ESF) Option - Subsequent Activity - per DS1 | I | | ULDD1, U1TD1, UNC1X, USL | NRCCC | | 184.85 | 23.81 | 1.99 | 0.7741 | | | | | | |
| | | C-bit Parity Option - Subsequent Activity - per DS3 | i | | U1TD3, ULDD3, UE3, UNC3X | NRCC3 | | 219.13 | 7.67 | 0.7355 | 0.00 | | | | | | |
| | **MULTIPLEXERS** | | | | | | | | | | | | | | | | |
| | | DS1 to DS0 Channel System per month | | | UNC1X | MQ1 | 116.22 | | | | | | | | | | |
| | | OCU-DP COCI (data) - DS1 to DS0 Channel System - per month (2.4-64kbs) used for a Local Loop | | | UDL | 1D1DD | 1.29 | | | | | | | | | | |
| | | OCU-DP COCI (data) - DS1 to DS0 Channel System - per month (2.4-64kbs) used for connection to a channelized DS1 Local Channel in the same SWC as collocation | | | U1TUD | 1D1DD | 1.29 | | | | | | | | | | |
| | | 2-wire ISDN COCI (BRITE) - DS1 to DS0 Channel Systsem - per month for a Local Loop | | | UDN | UC1CA | 2.77 | | | | | | | | | | |
| | | 2-wire ISDN COCI (BRITE) - DS1 to DS0 Channel Systsem - per month used for connection to a channelized DS1 Local Channel in the same SWC as collocation | | | U1TUB | UC1CA | 2.77 | | | | | | | | | | |
| | | Voice Grade COCI - DS1 to DS0 Channel System - per month used for a Local Loop | | | UEA | 1D1VG | 0.61 | | | | | | | | | | |
| | | Voice Grade COCI - DS1 to DS0 Channel System - per month used for connection to a channelized DS1 Local Channel in the same SWC as collocation | | | U1TUC | 1D1VG | 0.61 | | | | | | | | | | |
| | | DS3 to DS1 Channel System per month | | | UNC3X | MQ3 | 191.05 | | | | | | | | | | |
| | | STS-1 to DS1 Channel System per month | | | UNCSX | MQ3 | 191.05 | | | | | | | | | | |
| | | DS1 COCI used with Loop per month | | | USL | UC1D1 | 14.60 | | | | | | | | | | |
| | | DS1 COCI (used for connection to a channelized DS1 Local Channel in the same SWC as collocation) per month | | | U1TUA | UC1D1 | 14.60 | | | | | | | | | | |
| | | DS1 COCI used with Interoffice Channel per month | | | U1TD1 | UC1D1 | 14.60 | | | | | | | | | | |
| | | DS3 Interface Unit (DS1 COCI) used with Local Channel per month | | | ULDD1 | UC1D1 | 14.60 | | | | | | | | | | |

| UNBUNDLED NETWORK ELEMENTS - Louisiana | | | | | | | | | | | | | | Attachment: 2 Exh. B | | | |
|---|---|---|---|---|---|---|---|---|---|---|---|---|---|---|---|---|---|
| CATEGORY | | RATE ELEMENTS | Interim | Zone | BCS | USOC | RATES ($) | | | | | Svc Order Submitted Elec per LSR | Svc Order Submitted Manually per LSR | Incremental Charge - Manual Svc Order vs. Electronic-1st | Incremental Charge - Manual Svc Order vs. Electronic-Add'l | Incremental Charge - Manual Svc Order vs. Electronic-Disc 1st | Incremental Charge - Manual Svc Order vs. Electronic-Disc Add'l |
| | | | | | | | Rec | Nonrecurring | | Nonrecurring Disconnect | | OSS Rates ($) | | | | | |
| | | | | | | | | First | Add'l | First | Add'l | SOMEC | SOMAN | SOMAN | SOMAN | SOMAN | SOMAN |
| | | | | | | | | | | | | | | | | | |
| UNBUNDLED EXCHANGE ACCESS LOOP | | | | | | | | | | | | | | | | | |
| | 2-WIRE HIGH BIT RATE DIGITAL SUBSCRIBER LINE (HDSL) COMPATIBLE LOOP | | | | | | | | | | | | | | | | |
| | | 2 Wire Unbundled HDSL Loop including manual service inquiry & facility reservation - Zone 1 | | 1 | UHL | UHL2X | 11.26 | | | | | | | | | | |
| | | 2 Wire Unbundled HDSL Loop including manual service inquiry & facility reservation - Zone 2 | | 2 | UHL | UHL2X | 13.25 | | | | | | | | | | |
| | | 2 Wire Unbundled HDSL Loop including manual service inquiry & facility reservation - Zone 3 | | 3 | UHL | UHL2X | 14.65 | | | | | | | | | | |
| | | 2 Wire Unbundled HDSL Loop without manual service inquiry and facility reservation - Zone 1 | | 1 | UHL | UHL2W | 11.26 | | | | | | | | | | |
| | | 2 Wire Unbundled HDSL Loop without manual service inquiry and facility reservation - Zone 2 | | 2 | UHL | UHL2W | 13.25 | | | | | | | | | | |
| | | 2 Wire Unbundled HDSL Loop without manual service inquiry and facility reservation - Zone 3 | | 3 | UHL | UHL2W | 14.65 | | | | | | | | | | |
| | 4-WIRE HIGH BIT RATE DIGITAL SUBSCRIBER LINE (HDSL) COMPATIBLE LOOP | | | | | | | | | | | | | | | | |
| | | 4 Wire Unbundled HDSL Loop including manual service inquiry and facility reservation - Zone 1 | | 1 | UHL | UHL4X | 18.68 | | | | | | | | | | |
| | | 4-Wire Unbundled HDSL Loop including manual service inquiry and facility reservation - Zone 2 | | 2 | UHL | UHL4X | 19.15 | | | | | | | | | | |
| | | 4-Wire Unbundled HDSL Loop including manual service inquiry and facility reservation - Zone 3 | | 3 | UHL | UHL4X | 19.94 | | | | | | | | | | |
| | | 4-Wire Unbundled HDSL Loop without manual service inquiry and facility reservation - Zone 1 | | 1 | UHL | UHL4W | 18.68 | | | | | | | | | | |
| | | 4-Wire Unbundled HDSL Loop without manual service inquiry and facility reservation - Zone 2 | | 2 | UHL | UHL4W | 19.15 | | | | | | | | | | |
| | | 4-Wire Unbundled HDSL Loop without manual service inquiry and facility reservation - Zone 3 | | 3 | UHL | UHL4W | 19.94 | | | | | | | | | | |
| | 4-WIRE DS1 DIGITAL LOOP | | | | | | | | | | | | | | | | |
| | | 4-Wire DS1 Digital Loop - Zone 1 | | 1 | USL | USLXX | 98.56 | | | | | | | | | | |
| | | 4-Wire DS1 Digital Loop - Zone 2 | | 2 | USL | USLXX | 224.20 | | | | | | | | | | |
| | | 4-Wire DS1 Digital Loop - Zone 3 | | 3 | USL | USLXX | 565.73 | | | | | | | | | | |
| HIGH CAPACITY UNBUNDLED LOCAL LOOP | | | | | | | | | | | | | | | | | |
| | | High Capacity Unbundled Local Loop - DS3 - Per Mile per month | | | UE3 | 1L5ND | 11.55 | | | | | | | | | | |
| | | High Capacity Unbundled Local Loop - DS3 - Facility Termination per month | | | UE3 | UE3PX | 416.69 | | | | | | | | | | |
| | | High Capacity Unbundled Local Loop - STS-1 - Per Mile per month | | | UDLSX | 1L5ND | 11.55 | | | | | | | | | | |
| | | High Capacity Unbundled Local Loop - STS-1 - Facility Termination per month | | | UDLSX | UDLS1 | 430.74 | | | | | | | | | | |
| UNBUNDLED DEDICATED TRANSPORT | | | | | | | | | | | | | | | | | |
| | INTEROFFICE CHANNEL - DEDICATED TRANSPORT | | | | | | | | | | | | | | | | |
| | | Interoffice Channel - Dedicated Channel - DS1 - Per Mile per month | | | U1TD1 | 1L5XX | 0.30 | | | | | | | | | | |
| | | Interoffice Channel - Dedicated Tranport - DS1 - Facility Termination | | | U1TD1 | U1TF1 | 81.04 | | | | | | | | | | |
| | | Interoffice Channel - Dedicated Transport - DS3 - Per Mile per month | | | U1TD3 | 1L5XX | 6.95 | | | | | | | | | | |
| | | Interoffice Channel - Dedicated Transport - DS3 - Facility Termination per month | | | U1TD3 | U1TF3 | 978.02 | | | | | | | | | | |
| | | Interoffice Channel - Dedicated Transport - STS-1 - Per Mile per month | | | U1TS1 | 1L5XX | 6.95 | | | | | | | | | | |
| | | Interoffice Channel - Dedicated Transport - STS-1 - Facility Termination | | | U1TS1 | U1TFS | 954.72 | | | | | | | | | | |
| | | Local Channel - Dedicated - 2-Wire Voice Grade | | | ULDVX, UNCVX | ULDV2 | 21.07 | | | | | | | | | | |
| | | Local Channel - Dedicated - 2-Wire Voice Grade Rev Bat | | | ULDVX | ULDR2 | 21.07 | | | | | | | | | | |
| | | Local Channel - Dedicated - 4-Wire Voice Grade | | | ULDVX, UNCVX | ULDV4 | 22.32 | | | | | | | | | | |
| | | Local Channel - Dedicated - DS1 - Zone 1 | | 1 | ULDD1, UNC1X | ULDF1 | 45.06 | | | | | | | | | | |

| UNBUNDLED NETWORK ELEMENTS - Louisiana | | | | | | | | | | | | | | Attachment: 2 Exh. B | | | |
|---|---|---|---|---|---|---|---|---|---|---|---|---|---|---|---|---|---|
| CATEGORY | RATE ELEMENTS | Interim | Zone | BCS | USOC | RATES ($) | | | | | Svc Order Submitted Elec per LSR | Svc Order Submitted Manually per LSR | Incremental Charge - Manual Svc Order vs. Electronic-1st | Incremental Charge - Manual Svc Order vs. Electronic-Add'l | Incremental Charge - Manual Svc Order vs. Electronic-Disc 1st | Incremental Charge - Manual Svc Order vs. Electronic-Disc Add'l |
| | | | | | | Rec | Nonrecurring | | Nonrecurring Disconnect | | OSS Rates ($) | | | | | |
| | | | | | | | First | Add'l | First | Add'l | SOMEC | SOMAN | SOMAN | SOMAN | SOMAN | SOMAN |
| | Local Channel - Dedicated - DS1 - Zone 2 | | 2 | ULDD1, UNC1X | ULDF1 | 139.82 | | | | | | | | | | |
| | Local Channel - Dedicated - DS1 - Zone 3 | | 3 | ULDD1, UNC1X | ULDF1 | 80.52 | | | | | | | | | | |
| | Local Channel - Dedicated - DS3 - Per Mile per month | | | ULDD3, UNC3X | 1L5NC | 8.99 | | | | | | | | | | |
| | Local Channel - Dedicated - DS3 - Facility Termination | | | ULDD3, UNC3X | ULDF3 | 539.86 | | | | | | | | | | |
| | Local Channel - Dedicated - STS-1- Per Mile per month | | | ULDS1, UNCSX | 1L5NC | 8.99 | | | | | | | | | | |
| | Local Channel - Dedicated - STS-1 - Facility Termination | | | ULDS1, UNCSX | ULDFS | 525.80 | | | | | | | | | | |
| **ENHANCED EXTENDED LINK (EELs)** | | | | | | | | | | | | | | | | |
| | **NOTE: The monthly recurring and non-recurring charges below will apply and the Switch-As-Is Charge will not apply for UNE combinations provisioned as ' Ordinarily Combined' Network Elements.** | | | | | | | | | | | | | | | |
| | **NOTE: The monthly recurring and the Switch-As-Is Charge and not the non-recurring charges below will apply for UNE combinations provisioned as ' Currently Combined' Network Elements.** | | | | | | | | | | | | | | | |
| | **2-WIRE VOICE GRADE LOOP FOR USE IN A COMBINATION** | | | | | | | | | | | | | | | |
| | 2-Wire VG Loop (SL2) in Combination - Zone 1 | | 1 | UNCVX | UEAL2 | 17.17 | | | | | | | | | | |
| | 2-Wire VG Loop (SL2) in Combination - Zone 2 | | 2 | UNCVX | UEAL2 | 29.15 | | | | | | | | | | |
| | 2-Wire VG Loop (SL2) in Combination - Zone 3 | | 3 | UNCVX | UEAL2 | 58.03 | | | | | | | | | | |
| | Voice Grade COCI - Per Month | | | UNCVX | 1D1VG | 0.75 | | | | | | | | | | |
| | **4-WIRE VOICE GRADE LOOP FOR USE IN A COMBINATION** | | | | | | | | | | | | | | | |
| | 4-Wire Analog Voice Grade Loop in Combination - Zone 1 | | 1 | UNCVX | UEAL4 | 35.43 | | | | | | | | | | |
| | 4-Wire Analog Voice Grade Loop in Combination - Zone 2 | | 2 | UNCVX | UEAL4 | 44.07 | | | | | | | | | | |
| | 4-Wire Analog Voice Grade Loop in Combination - Zone 3 | | 3 | UNCVX | UEAL4 | 69.45 | | | | | | | | | | |
| | Voice Grade COCI in combination - per month | | | UNCVX | 1D1VG | 0.75 | | | | | | | | | | |
| | **4-WIRE 56 KBPS DIGITAL LOOP FOR USE IN A COMBINATION** | | | | | | | | | | | | | | | |
| | 4-Wire 56Kbps Digital Grade Loop in Combination - Zone 1 | | 1 | UNCDX | UDL56 | 35.64 | | | | | | | | | | |
| | 4-Wire 56Kbps Digital Grade Loop in Combination - Zone 2 | | 2 | UNCDX | UDL56 | 42.30 | | | | | | | | | | |
| | 4-Wire 56Kbps Digital Grade Loop in Combination - Zone 3 | | 3 | UNCDX | UDL56 | 44.76 | | | | | | | | | | |
| | OCU-DP COCI (data) per month (2.4-64kbs) | | | UNCDX | 1D1DD | 1.59 | | | | | | | | | | |
| | **4-WIRE 64 KBPS DIGITAL LOOP FOR USE IN A COMBINATI\ON** | | | | | | | | | | | | | | | |
| | 4-Wire 64Kbps Digital Grade Loop in Combination - Zone 1 | | 1 | UNCDX | UDL64 | 35.64 | | | | | | | | | | |
| | 4-Wire 64Kbps Digital Grade Loop in Combination - Zone 2 | | 2 | UNCDX | UDL64 | 42.30 | | | | | | | | | | |
| | 4-Wire 64Kbps Digital Grade Loop in Combination - Zone 3 | | 3 | UNCDX | UDL64 | 44.76 | | | | | | | | | | |
| | OCU-DP COCI (data) - in combination - per month (2.4-64kbs) | | | UNCDX | 1D1DD | 1.59 | | | | | | | | | | |
| | **2-WIRE ISDN LOOP FOR USE IN COMBINATION** | | | | | | | | | | | | | | | |
| | 2-Wire ISDN Loop in Combination - Zone 1 | | 1 | UNCNX | U1L2X | 25.40 | | | | | | | | | | |
| | 2-Wire ISDN Loop in Combination - Zone 2 | | 2 | UNCNX | U1L2X | 40.57 | | | | | | | | | | |
| | 2-Wire ISDN Loop in Combination - Zone 3 | | 3 | UNCNX | U1L2X | 74.96 | | | | | | | | | | |
| | 2-wire ISDN COCI (BRITE) - in combination - per month | | | UNCNX | UC1CA | 3.40 | | | | | | | | | | |
| | **4-WIRE DS1 DIGITAL LOOP FOR USE IN A COMBINATION** | | | | | | | | | | | | | | | |
| | 4-Wire DS1 Digital Loop in Combination - Zone 1 | | 1 | UNC1X | USLXX | 98.56 | | | | | | | | | | |
| | 4-Wire DS1 Digital Loop in Combination - Zone 2 | | 2 | UNC1X | USLXX | 224.20 | | | | | | | | | | |
| | 4-Wire DS1 Digital Loop in Combination - Zone 3 | | 3 | UNC1X | USLXX | 565.73 | | | | | | | | | | |
| | DS1 COCI in combination per month | | | UNC1X | UC1D1 | 13.55 | | | | | | | | | | |
| | **2 WIRE VOICE GRADE INTEROFFICE TRANSPORT FOR USE IN A COMBINATION** | | | | | | | | | | | | | | | |
| | Interoffice Transport - 2-wire VG - Dedicated- Per Mile Per Month | | | UNCVX | 1L5XX | 0.01 | | | | | | | | | | |
| | Interoffice Transport - 2-wire VG - Dedicated - Facility Termination per month | | | UNCVX | U1TV2 | 25.99 | | | | | | | | | | |
| | **4 WIRE VOICE GRADE INTEROFFICE TRANSPORT FOR USE IN A COMBINATION** | | | | | | | | | | | | | | | |
| | Interoffice Transport - 4-wire VG - Dedicated - Per Mile Per Month | | | UNCVX | 1L5XX | 0.01 | | | | | | | | | | |
| | Interoffice Transport - 4-wire VG - Dedicated - Facility Termination per month | | | UNCVX | U1TV4 | 22.78 | | | | | | | | | | |
| | **DS1 INTEROFFICE TRANSPORT FOR COMBINATION** | | | | | | | | | | | | | | | |
| | Interoffice Transport - Dedicated - DS1 combination - Per Mile per month | | | UNC1X | 1L5XX | 0.30 | | | | | | | | | | |
| | Interoffice Transport - Dedicated - DS1 combination - Facility Termination per month | | | UNC1X | U1TF1 | 81.04 | | | | | | | | | | |
| | **DS3 INTEROFFICE TRANSPORT FOR USE IN A COMBINATION** | | | | | | | | | | | | | | | |
| | Interoffice Transport - Dedicated - DS3 combination - Per Mile Per Month | | | UNC3X | 1L5XX | 6.95 | | | | | | | | | | |
| | Interoffice Transport - Dedicated - DS3 - Facility Termination per month | | | UNC3X | U1TF3 | 978.02 | | | | | | | | | | |

| UNBUNDLED NETWORK ELEMENTS - Louisiana | | | | | | | | | | | | | | Attachment: 2 Exh. B | | | |
|---|---|---|---|---|---|---|---|---|---|---|---|---|---|---|---|---|---|
| CATEGORY | RATE ELEMENTS | Interim | Zone | BCS | USOC | RATES ($) | | | | | Svc Order Submitted Elec per LSR | Svc Order Submitted Manually per LSR | Incremental Charge - Manual Svc Order vs. Electronic-1st | Incremental Charge - Manual Svc Order vs. Electronic-Add'l | Incremental Charge - Manual Svc Order vs. Electronic-Disc 1st | Incremental Charge - Manual Svc Order vs. Electronic-Disc Add'l |
| | | | | | | Rec | Nonrecurring | | Nonrecurring Disconnect | | OSS Rates ($) | | | | | |
| | | | | | | | First | Add'l | First | Add'l | SOMEC | SOMAN | SOMAN | SOMAN | SOMAN | SOMAN |
| STS-1 INTEROFFICE TRANSPORT FOR USE IN COMBINATION | | | | | | | | | | | | | | | | |
| | Interoffice Transport - Dedicated - STS-1 combination - Per Mile Per Month | | | UNCSX | 1L5XX | 6.95 | | | | | | | | | | |
| | Interoffice Transport - Dedicated - STS-1 combination - Facility Termination per month | | | UNCSX | U1TFS | 954.72 | | | | | | | | | | |
| 4-WIRE 56 KBPS DIGITAL LOOP WITH 56 KBPS INTEROFFICE TRANSPORT | | | | | | | | | | | | | | | | |
| | 4-wire 56 kbps Local Loop in combination - Zone 1 | | 1 | UNCDX | UDL56 | 35.64 | | | | | | | | | | |
| | 4-wire 56 kbps Local Loop in combination - Zone 2 | | 2 | UNCDX | UDL56 | 42.30 | | | | | | | | | | |
| | 4-wire 56 kbps Local Loop in combination - Zone 3 | | 3 | UNCDX | UDL56 | 44.76 | | | | | | | | | | |
| | Interoffice Transport - Dedicated - 4-wire 56 kbps combination - Per Mile per month | | | UNCDX | 1L5XX | 0.01 | | | | | | | | | | |
| | Interoffice Transport - Dedicated - 4-wire 56 kbps combination - Facility Termination per month | | | UNCDX | U1TD5 | 17.95 | | | | | | | | | | |
| 4-WIRE 64 KBPS DIGITAL EXTENDED LOOP WITH 64 KBPS INTEROFFICE TRANSPORT | | | | | | | | | | | | | | | | |
| | 4-wire 64 kbps Lcoal Loop in Combination - Zone 1 | | 1 | UNCDX | UDL64 | 35.64 | | | | | | | | | | |
| | 4-wire 64 kbps Lcoal Loop in Combination - Zone 2 | | 2 | UNCDX | UDL64 | 42.30 | | | | | | | | | | |
| | 4-wire 64 kbps Lcoal Loop in Combination - Zone 3 | | 3 | UNCDX | UDL64 | 44.76 | | | | | | | | | | |
| | Interoffice Transport - Dedicated - 4-wire 64 kbps combination - Per Mile per month | | | UNCDX | 1L5XX | 0.01 | | | | | | | | | | |
| | Interoffice Transport - Dedicated - 4-wire 64 kbps combination - Facility Termination per month | | | UNCDX | U1TD6 | 17.95 | | | | | | | | | | |
| 4-WIRE 56 KBPS DIGITAL EXTENDED LOOP WITH DS0 INTEROFFICE TRANSPORT | | | | | | | | | | | | | | | | |
| | 4-wire 56 kbps Local Loop in combination - Zone 1 | | 1 | UNCDX | UDL56 | 35.64 | | | | | | | | | | |
| | 4-wire 56 kbps Local Loop in combination - Zone 2 | | 2 | UNCDX | UDL56 | 42.30 | | | | | | | | | | |
| | 4-wire 56 kbps Local Loop in combination - Zone 3 | | 3 | UNCDX | UDL56 | 44.76 | | | | | | | | | | |
| | 4-wiree 56 kbps Interoffice Transport - Dedicated - Per Mile per month | | | UNCDX | 1L5XX | 0.01 | | | | | | | | | | |
| | 4-wire 56 kbps Interoffice Transport - Dedicated - Facility Termination per month | | | UNCDX | U1TD5 | 17.95 | | | | | | | | | | |
| 4-WIRE 64 KBPS DIGITAL EXTENDED LOOP WITH DS0 INTEROFFICE TRANSPORT | | | | | | | | | | | | | | | | |
| | 4-wire 64 kbps Local Loop in combination - Zone 1 | | 1 | UNCDX | UDL64 | 35.64 | | | | | | | | | | |
| | 4-wire 64 kbps Local Loop in combination - Zone 2 | | 2 | UNCDX | UDL64 | 42.30 | | | | | | | | | | |
| | 4-wire 64 kbps Local Loop in combination - Zone 3 | | 3 | UNCDX | UDL64 | 44.76 | | | | | | | | | | |
| | I4-wire 65 kbps Interoffice Transport - Dedicated - Per Mile per month | | | UNCDX | 1L5XX | 0.01 | | | | | | | | | | |
| | 4-wire 64 kbps Interoffice Transport - Dedicated - Facility Termination per month | | | UNCDX | U1TD6 | 17.95 | | | | | | | | | | |
| DS1 DIGITAL LOOP AND DS1 INTERFOFFICE TRANSPORT | | | | | | | | | | | | | | | | |
| | 4-Wire DS1 Digital Loop in Combination - Zone 1 | | 1 | UNC1X | USLXX | 98.56 | | | | | | | | | | |
| | 4-Wire DS1 Digital Loop in Combination - Zone 2 | | 2 | UNC1X | USLXX | 224.20 | | | | | | | | | | |
| | 4-Wire DS1 Digital Loop in Combination - Zone 3 | | 3 | UNC1X | USLXX | 565.73 | | | | | | | | | | |
| | Interoffice Transport - Dedicated - DS1 combination - Per Mile per month | | | UNC1X | 1L5XX | 0.30 | | | | | | | | | | |
| | Interoffice Transport - Dedicated - DS1 combination - Facility Termination per month | | | UNC1X | U1TF1 | 81.04 | | | | | | | | | | |
| DS3 DIGITAL LOOP WITH DEDICATED DS3 INTEROFFICE TRANSPORT | | | | | | | | | | | | | | | | |
| | DS3 Local Loop in combination - per mile per month | | | UNC3X | 1L5ND | 13.28 | | | | | | | | | | |
| | DS3 Local Loop in combination - Facility Termination per month | | | UNC3X | UE3PX | 479.19 | | | | | | | | | | |
| | Interoffice Transport - Dedicated - DS3 - Per Mile per month | | | UNC3X | 1L5XX | 6.95 | | | | | | | | | | |
| | Interoffice Transport - Dedicated - DS3 combination - Facility Termination per month | | | UNC3X | U1TF3 | 978.02 | | | | | | | | | | |
| STS-1 DIGITAL LOOP WITH DEDICATED STS-1 INTEROFFICE TRANSPORT | | | | | | | | | | | | | | | | |
| | STS-1 Local Lolp in combination - per mile per month | | | UNCSX | 1L5ND | 13.28 | | | | | | | | | | |
| | STS-1 Local Loop in combination - Facility Termination per month | | | UNCSX | UDLS1 | 495.36 | | | | | | | | | | |
| | Interoffice Transport - Dedicated - STS-1 combination - per mile per month | | | UNCSX | 1L5XX | 6.95 | | | | | | | | | | |

| UNBUNDLED NETWORK ELEMENTS - Louisiana | | | | | | | | | | | | | | Attachment: 2 Exh. B | | | |
|---|---|---|---|---|---|---|---|---|---|---|---|---|---|---|---|---|---|
| CATEGORY | | RATE ELEMENTS | Interim | Zone | BCS | USOC | RATES ($) | | | | | Svc Order Submitted Elec per LSR | Svc Order Submitted Manually per LSR | Incremental Charge - Manual Svc Order vs. Electronic-1st | Incremental Charge - Manual Svc Order vs. Electronic-Add'l | Incremental Charge - Manual Svc Order vs. Electronic-Disc 1st | Incremental Charge - Manual Svc Order vs. Electronic-Disc Add'l |
| | | | | | | | Rec | Nonrecurring | | Nonrecurring Disconnect | | OSS Rates ($) | | | | | |
| | | | | | | | | First | Add'l | First | Add'l | SOMEC | SOMAN | SOMAN | SOMAN | SOMAN | SOMAN |
| | | Interoffice Transport - Dedicated - STS-1 combination - Facility Termination per month | | | UNCSX | U1TFS | 954.72 | | | | | | | | | | |
| ADDITIONAL NETWORK ELEMENTS | | | | | | | | | | | | | | | | | |
| | When used as a part of a currently combined facility, the non-recurrng charges do not apply, but a Switch As Is charge does apply. | | | | | | | | | | | | | | | | |
| | When used as ordinarily combined network elements in All States, the non-recurring charges apply and the Switch As Is Charge does not. | | | | | | | | | | | | | | | | |
| | Nonrecurring Currently Combined Network Elements "Switch As Is" Charge (One applies to each combination) | | | | | | | | | | | | | | | | |
| | Optional Features & Functions: | | | | | | | | | | | | | | | | |
| | | Clear Channel Capability Extended Frame Option - per DS1 | I | | U1TD1, ULDD1,UNC1X | CCOEF | | 0.00 | 0.00 | 0.00 | 0.00 | | | | | | |
| | | Clear Channel Capability Super FrameOption - per DS1 | I | | U1TD1, ULDD1,UNC1X | CCOSF | | 0.00 | 0.00 | 0.00 | 0.00 | | | | | | |
| | | Clear Channel Capability (SF/ESF) Option - Subsequent Activity - per DS1 | I | | ULDD1, U1TD1, UNC1X, USL | NRCCC | | 184.65 | 23.79 | 1.97 | 0.77 | | | | | | |
| | | C-bit Parity Option - Subsequent Activity - per DS3 | i | | U1TD3, ULDD3, UE3, UNC3X | NRCC3 | | 218.78 | 7.66 | 0.7263 | 0.00 | | | | | | |
| | MULTIPLEXERS | | | | | | | | | | | | | | | | |
| | | DS1 to DS0 Channel System per month | | | UNC1X | MQ1 | 120.85 | | | | | | | | | | |
| | | OCU-DP COCI (data) - DS1 to DS0 Channel System - per month (2.4-64kbs) used for a Local Loop | | | UDL | 1D1DD | 1.59 | | | | | | | | | | |
| | | OCU-DP COCI (data) - DS1 to DS0 Channel System - per month (2.4-64kbs) used for connection to a channelized DS1 Local Channel in the same SWC as collocation | | | U1TUD | 1D1DD | 1.59 | | | | | | | | | | |
| | | 2-wire ISDN COCI (BRITE) - DS1 to DS0 Channel Systsem - per month for a Local Loop | | | UDN | UC1CA | 3.40 | | | | | | | | | | |
| | | 2-wire ISDN COCI (BRITE) - DS1 to DS0 Channel Systsem - per month used for connection to a channelized DS1 Local Channel in the same SWC as collocation | | | U1TUB | UC1CA | 3.40 | | | | | | | | | | |
| | | Voice Grade COCI - DS1 to DS0 Channel System - per month used for a Local Loop | | | UEA | 1D1VG | 0.75 | | | | | | | | | | |
| | | Voice Grade COCI - DS1 to DS0 Channel System - per month used for connection to a channelized DS1 Local Channel in the same SWC as collocation | | | U1TUC | 1D1VG | 0.75 | | | | | | | | | | |
| | | DS3 to DS1 Channel System per month | | | UNC3X | MQ3 | 231.70 | | | | | | | | | | |
| | | STS-1 to DS1 Channel System per month | | | UNCSX | MQ3 | 231.70 | | | | | | | | | | |
| | | DS1 COCI used with Loop per month | | | USL | UC1D1 | 13.55 | | | | | | | | | | |
| | | DS1 COCI (used for connection to a channelized DS1 Local Channel in the same SWC as collocation) per month | | | U1TUA | UC1D1 | 13.55 | | | | | | | | | | |
| | | DS1 COCI used with Interoffice Channel per month | | | U1TD1 | UC1D1 | 13.55 | | | | | | | | | | |
| | | DS3 Interface Unit (DS1 COCI) used with Local Channel per month | | | ULDD1 | UC1D1 | 13.55 | | | | | | | | | | |

| UNBUNDLED NETWORK ELEMENTS - Mississippi | | | | | | | | | | | | | | Attachment: 2 Exh. B | | | |
|---|---|---|---|---|---|---|---|---|---|---|---|---|---|---|---|---|---|
| CATEGORY | | RATE ELEMENTS | Interim | Zone | BCS | USOC | RATES ($) | | | | | Svc Order Submitted Elec per LSR | Svc Order Submitted Manually per LSR | Incremental Charge - Manual Svc Order vs. Electronic-1st | Incremental Charge - Manual Svc Order vs. Electronic-Add'l | Incremental Charge - Manual Svc Order vs. Electronic-Disc 1st | Incremental Charge - Manual Svc Order vs. Electronic-Disc Add'l |
| | | | | | | | Rec | Nonrecurring | | Nonrecurring Disconnect | | OSS Rates ($) | | | | | |
| | | | | | | | | | Add'l | | Add'l | SOMEC | SOMAN | SOMAN | SOMAN | SOMAN | SOMAN |
| | | | | | | | | | | | | | | | | | |
| UNBUNDLED EXCHANGE ACCESS LOOP | | | | | | | | | | | | | | | | | |
| | 2-WIRE HIGH BIT RATE DIGITAL SUBSCRIBER LINE (HDSL) COMPATIBLE LOOP | | | | | | | | | | | | | | | | |
| | | 2 Wire Unbundled HDSL Loop including manual service inquiry & facility reservation - Zone 1 | | 1 | UHL | UHL2X | 10.06 | | | | | | | | | | |
| | | 2 Wire Unbundled HDSL Loop including manual service inquiry & facility reservation - Zone 2 | | 2 | UHL | UHL2X | 10.60 | | | | | | | | | | |
| | | 2 Wire Unbundled HDSL Loop including manual service inquiry & facility reservation - Zone 3 | | 3 | UHL | UHL2X | 11.35 | | | | | | | | | | |
| | | 2 Wire Unbundled HDSL Loop including manual service inquiry & facility reservation - Zone 4 | | 4 | UHL | UHL2X | 12.03 | | | | | | | | | | |
| | | 2 Wire Unbundled HDSL Loop without manual service inquiry and facility reservation - Zone 1 | | 1 | UHL | UHL2W | 10.06 | | | | | | | | | | |
| | | 2 Wire Unbundled HDSL Loop without manual service inquiry and facility reservation - Zone 2 | | 2 | UHL | UHL2W | 10.60 | | | | | | | | | | |
| | | 2 Wire Unbundled HDSL Loop without manual service inquiry and facility reservation - Zone 3 | | 3 | UHL | UHL2W | 11.35 | | | | | | | | | | |
| | | 2 Wire Unbundled HDSL Loop without manual service inquiry and facility reservation - Zone 4 | | 4 | UHL | UHL2W | 12.03 | | | | | | | | | | |
| | 4-WIRE HIGH BIT RATE DIGITAL SUBSCRIBER LINE (HDSL) COMPATIBLE LOOP | | | | | | | | | | | | | | | | |
| | | 4 Wire Unbundled HDSL Loop including manual service inquiry and facility reservation - Zone 1 | | 1 | UHL | UHL4X | 15.85 | | | | | | | | | | |
| | | 4-Wire Unbundled HDSL Loop including manual service inquiry and facility reservation - Zone 2 | | 2 | UHL | UHL4X | 15.44 | | | | | | | | | | |
| | | 4-Wire Unbundled HDSL Loop including manual service inquiry and facility reservation - Zone 3 | | 3 | UHL | UHL4X | 17.93 | | | | | | | | | | |
| | | 4-Wire Unbundled HDSL Loop including manual service inquiry and facility reservation - Zone 4 | | 4 | UHL | UHL4X | 16.63 | | | | | | | | | | |
| | | 4-Wire Unbundled HDSL Loop without manual service inquiry and facility reservation - Zone 1 | | 1 | UHL | UHL4W | 15.85 | | | | | | | | | | |
| | | 4-Wire Unbundled HDSL Loop without manual service inquiry and facility reservation - Zone 2 | | 2 | UHL | UHL4W | 15.44 | | | | | | | | | | |
| | | 4-Wire Unbundled HDSL Loop without manual service inquiry and facility reservation - Zone 3 | | 3 | UHL | UHL4W | 17.93 | | | | | | | | | | |
| | | 4-Wire Unbundled HDSL Loop without manual service inquiry and facility reservation - Zone 4 | | 4 | UHL | UHL4W | 16.63 | | | | | | | | | | |
| | 4-WIRE DS1 DIGITAL LOOP | | | | | | | | | | | | | | | | |
| | | 4-Wire DS1 Digital Loop - Zone 1 | | 1 | USL | USLXX | 118.62 | | | | | | | | | | |
| | | 4-Wire DS1 Digital Loop - Zone 2 | | 2 | USL | USLXX | 148.79 | | | | | | | | | | |
| | | 4-Wire DS1 Digital Loop - Zone 3 | | 3 | USL | USLXX | 237.75 | | | | | | | | | | |
| | | 4-Wire DS1 Digital Loop - Zone 4 | | 4 | USL | USLXX | 527.23 | | | | | | | | | | |
| HIGH CAPACITY UNBUNDLED LOCAL LOOP | | | | | | | | | | | | | | | | | |
| | | High Capacity Unbundled Local Loop - DS3 - Per Mile per month | | | UE3 | 1L5ND | 12.88 | | | | | | | | | | |
| | | High Capacity Unbundled Local Loop - DS3 - Facility Termination per month | | | UE3 | UE3PX | 375.07 | | | | | | | | | | |
| | | High Capacity Unbundled Local Loop - STS-1 - Per Mile per month | | | UDLSX | 1L5ND | 12.88 | | | | | | | | | | |
| | | High Capacity Unbundled Local Loop - STS-1 - Facility Termination per month | | | UDLSX | UDLS1 | 389.33 | | | | | | | | | | |
| UNBUNDLED DEDICATED TRANSPORT | | | | | | | | | | | | | | | | | |
| | INTEROFFICE CHANNEL - DEDICATED TRANSPORT | | | | | | | | | | | | | | | | |
| | | Interoffice Channel - Dedicated Channel - DS1 - Per Mile per month | | | U1TD1 | 1L5XX | 0.23 | | | | | | | | | | |
| | | Interoffice Channel - Dedicated Tranport - DS1 - Facility Termination | | | U1TD1 | U1TF1 | 65.93 | | | | | | | | | | |
| | | Interoffice Channel - Dedicated Transport - DS3 - Per Mile per month | | | U1TD3 | 1L5XX | 5.47 | | | | | | | | | | |

| CATEGORY | RATE ELEMENTS | Interim | Zone | BCS | USOC | RATES ($) | | | | | Svc Order Submitted Elec per LSR | Svc Order Submitted Manually per LSR | Incremental Charge - Manual Svc Order vs. Electronic- 1st | Incremental Charge - Manual Svc Order vs. Electronic- Add'l | Incremental Charge - Manual Svc Order vs. Electronic- Disc 1st | Incremental Charge - Manual Svc Order vs. Electronic- Disc Add'l |
|---|---|---|---|---|---|---|---|---|---|---|---|---|---|---|---|---|
| | | | | | | Rec | Nonrecurring | | Nonrecurring Disconnect | | OSS Rates ($) | | | | | |
| | | | | | | | | Add'l | | Add'l | SOMEC | SOMAN | SOMAN | SOMAN | SOMAN | SOMAN |
| | Interoffice Channel - Dedicated Transport - DS3 - Facility Termination per month | | | U1TD3 | U1TF3 | 738.18 | | | | | | | | | | |
| | Interoffice Channel - Dedicated Transport - STS-1 - Per Mile per month | | | U1TS1 | 1L5XX | 5.47 | | | | | | | | | | |
| | Interoffice Channel - Dedicated Transport - STS-1 - Facility Termination | | | U1TS1 | U1TFS | 740.84 | | | | | | | | | | |
| | Local Channel - Dedicated - 2-Wire Voice Grade | | | ULDVX, UNCVX | ULDV2 | 17.15 | | | | | | | | | | |
| | Local Channel - Dedicated - 2-Wire Voice Grade Rev Bat | | | ULDVX | ULDR2 | 17.15 | | | | | | | | | | |
| | Local Channel - Dedicated - 4-Wire Voice Grade | | | ULDVX, UNCVX | ULDV4 | 18.39 | | | | | | | | | | |
| | Local Channel - Dedicated - DS1 - Zone 1 | | 1 | ULDD1, UNC1X | ULDF1 | 42.35 | | | | | | | | | | |
| | Local Channel - Dedicated - DS1 - Zone 2 | | 2 | ULDD1, UNC1X | ULDF1 | 41.39 | | | | | | | | | | |
| | Local Channel - Dedicated - DS1 - Zone 3 | | 3 | ULDD1, UNC1X | ULDF1 | 254.87 | | | | | | | | | | |
| | Local Channel - Dedicated - DS1 - Zone 4 | | 4 | ULDD1, UNC1X | ULDF1 | 254.87 | | | | | | | | | | |
| | Local Channel - Dedicated - DS3 - Per Mile per month | | | ULDD3, UNC3X | 1L5NC | 11.11 | | | | | | | | | | |
| | Local Channel - Dedicated - DS3 - Facility Termination | | | ULDD3, UNC3X | ULDF3 | 475.95 | | | | | | | | | | |
| | Local Channel - Dedicated - STS-1- Per Mile per month | | | ULDS1, UNCSX | 1L5NC | 11.11 | | | | | | | | | | |
| | Local Channel - Dedicated - STS-1 - Facility Termination | | | ULDS1, UNCSX | ULDFS | 469.22 | | | | | | | | | | |
| **ENHANCED EXTENDED LINK (EELs)** | | | | | | | | | | | | | | | | |
| | **NOTE: The monthly recurring and non-recurring charges below will apply and the Switch-As-Is Charge will not apply for UNE combinations provisioned as ' Ordinarily Combined' Network Elements.** | | | | | | | | | | | | | | | |
| | **NOTE: The monthly recurring and the Switch-As-Is Charge and not the non-recurring charges below will apply for UNE combinations provisioned as ' Currently Combined' Network Elements.** | | | | | | | | | | | | | | | |
| | **2-WIRE VOICE GRADE LOOP FOR USE IN A COMBINATION** | | | | | | | | | | | | | | | |
| | 2-Wire VG Loop (SL2) in Combination - Zone 1 | | 1 | UNCVX | UEAL2 | 15.97 | | | | | | | | | | |
| | 2-Wire VG Loop (SL2) in Combination - Zone 2 | | 2 | UNCVX | UEAL2 | 21.56 | | | | | | | | | | |
| | 2-Wire VG Loop (SL2) in Combination - Zone 3 | | 3 | UNCVX | UEAL2 | 31.68 | | | | | | | | | | |
| | 2-Wire VG Loop (SL2) in Combination - Zone 4 | | 4 | UNCVX | UEAL2 | 52.58 | | | | | | | | | | |
| | Voice Grade COCI - Per Month | | | UNCVX | 1D1VG | 0.66 | | | | | | | | | | |
| | **4-WIRE VOICE GRADE LOOP FOR USE IN A COMBINATION** | | | | | | | | | | | | | | | |
| | 4-Wire Analog Voice Grade Loop in Combination - Zone 1 | | 1 | UNCVX | UEAL4 | 31.59 | | | | | | | | | | |
| | 4-Wire Analog Voice Grade Loop in Combination - Zone 2 | | 2 | UNCVX | UEAL4 | 44.00 | | | | | | | | | | |
| | 4-Wire Analog Voice Grade Loop in Combination - Zone 3 | | 3 | UNCVX | UEAL4 | 57.53 | | | | | | | | | | |
| | 4-Wire Analog Voice Grade Loop in Combination - Zone 4 | | 4 | UNCVX | UEAL4 | 57.53 | | | | | | | | | | |
| | Voice Grade COCI in combination - per month | | | UNCVX | 1D1VG | 0.66 | | | | | | | | | | |
| | **4-WIRE 56 KBPS DIGITAL LOOP FOR USE IN A COMBINATION** | | | | | | | | | | | | | | | |
| | 4-Wire 56Kbps Digital Grade Loop in Combination - Zone 1 | | 1 | UNCDX | UDL56 | 31.56 | | | | | | | | | | |
| | 4-Wire 56Kbps Digital Grade Loop in Combination - Zone 2 | | 2 | UNCDX | UDL56 | 39.73 | | | | | | | | | | |
| | 4-Wire 56Kbps Digital Grade Loop in Combination - Zone 3 | | 3 | UNCDX | UDL56 | 46.87 | | | | | | | | | | |
| | 4-Wire 56Kbps Digital Grade Loop in Combination - Zone 4 | | 4 | UNCDX | UDL56 | 37.09 | | | | | | | | | | |
| | OCU-DP COCI (data) per month (2.4-64kbs) | | | UNCDX | 1D1DD | 1.40 | | | | | | | | | | |
| | **4-WIRE 64 KBPS DIGITAL LOOP FOR USE IN A COMBINATI\ON** | | | | | | | | | | | | | | | |
| | 4-Wire 64Kbps Digital Grade Loop in Combination - Zone 1 | | 1 | UNCDX | UDL64 | 31.56 | | | | | | | | | | |
| | 4-Wire 64Kbps Digital Grade Loop in Combination - Zone 2 | | 2 | UNCDX | UDL64 | 39.73 | | | | | | | | | | |
| | 4-Wire 64Kbps Digital Grade Loop in Combination - Zone 3 | | 3 | UNCDX | UDL64 | 46.87 | | | | | | | | | | |
| | 4-Wire 64Kbps Digital Grade Loop in Combination - Zone 4 | | 4 | UNCDX | UDL64 | 37.09 | | | | | | | | | | |
| | OCU-DP COCI (data) - in combination - per month (2.4-64kbs) | | | UNCDX | 1D1DD | 1.40 | | | | | | | | | | |
| | **2-WIRE ISDN LOOP FOR USE IN COMBINATION** | | | | | | | | | | | | | | | |
| | 2-Wire ISDN Loop in Combination - Zone 1 | | 1 | UNCNX | U1L2X | 24.16 | | | | | | | | | | |
| | 2-Wire ISDN Loop in Combination - Zone 2 | | 2 | UNCNX | U1L2X | 31.73 | | | | | | | | | | |
| | 2-Wire ISDN Loop in Combination - Zone 3 | | 3 | UNCNX | U1L2X | 42.94 | | | | | | | | | | |
| | 2-Wire ISDN Loop in Combination - Zone 4 | | 4 | UNCNX | U1L2X | 68.06 | | | | | | | | | | |
| | 2-wire ISDN COCI (BRITE) - in combination - per month | | | UNCNX | UC1CA | 3.01 | | | | | | | | | | |
| | **4-WIRE DS1 DIGITAL LOOP FOR USE IN A COMBINATION** | | | | | | | | | | | | | | | |
| | 4-Wire DS1 Digital Loop in Combination - Zone 1 | | 1 | UNC1X | USLXX | 90.94 | | | | | | | | | | |
| | 4-Wire DS1 Digital Loop in Combination - Zone 2 | | 2 | UNC1X | USLXX | 148.79 | | | | | | | | | | |
| | 4-Wire DS1 Digital Loop in Combination - Zone 3 | | 3 | UNC1X | USLXX | 237.75 | | | | | | | | | | |
| | 4-Wire DS1 Digital Loop in Combination - Zone 4 | | 4 | UNC1X | USLXX | 527.23 | | | | | | | | | | |
| | DS1 COCI in combination per month | | | UNC1X | UC1D1 | 3.01 | | | | | | | | | | |
| | **2 WIRE VOICE GRADE INTEROFFICE TRANSPORT FOR USE IN A COMBINATION** | | | | | | | | | | | | | | | |
| | Interoffice Transport - 2-wire VG - Dedicated- Per Mile Per Month | | | UNCVX | 1L5XX | 0.00 | | | | | | | | | | |

| CATEGORY | RATE ELEMENTS | Interim | Zone | BCS | USOC | RATES ($) | | | | | Svc Order Submitted Elec per LSR | Svc Order Submitted Manually per LSR | Incremental Charge - Manual Svc Order vs. Electronic-1st | Incremental Charge - Manual Svc Order vs. Electronic-Add'l | Incremental Charge - Manual Svc Order vs. Electronic-Disc 1st | Incremental Charge - Manual Svc Order vs. Electronic-Disc Add'l |
|---|---|---|---|---|---|---|---|---|---|---|---|---|---|---|---|---|
| | | | | | | Rec | Nonrecurring | | Nonrecurring Disconnect | | OSS Rates ($) | | | | | |
| | | | | | | | | Add'l | | Add'l | SOMEC | SOMAN | SOMAN | SOMAN | SOMAN | SOMAN |
| | Interoffice Transport - 2-wire VG - Dedicated - Facility Termination per month | | | UNCVX | U1TV2 | 23.37 | | | | | | | | | | |
| | **4 WIRE VOICE GRADE INTEROFFICE TRANSPORT FOR USE IN A COMBINATION** | | | | | | | | | | | | | | | |
| | Interoffice Transport - 4-wire VG - Dedicated - Per Mile Per Month | | | UNCVX | 1L5XX | 0.00 | | | | | | | | | | |
| | Interoffice Transport - 4-wire VG - Dedicated - Facility Termination per month | | | UNCVX | U1TV4 | 20.54 | | | | | | | | | | |
| | **DS1 INTEROFFICE TRANSPORT FOR COMBINATION** | | | | | | | | | | | | | | | |
| | Interoffice Transport - Dedicated - DS1 combination - Per Mile per month | | | UNC1X | 1L5XX | 0.21 | | | | | | | | | | |
| | Interoffice Transport - Dedicated - DS1 combination - Facility Termination per month | | | UNC1X | U1TF1 | 59.48 | | | | | | | | | | |
| | **DS3 INTEROFFICE TRANSPORT FOR USE IN A COMBINATION** | | | | | | | | | | | | | | | |
| | Interoffice Transport - Dedicated - DS3 combination - Per Mile Per Month | | | UNC3X | 1L5XX | 5.47 | | | | | | | | | | |
| | Interoffice Transport - Dedicated - DS3 - Facility Termination per month | | | UNC3X | U1TF3 | 738.18 | | | | | | | | | | |
| | **STS-1 INTEROFFICE TRANSPORT FOR USE IN COMBINATION** | | | | | | | | | | | | | | | |
| | Interoffice Transport - Dedicated - STS-1 combination - Per Mile Per Month | | | UNCSX | 1L5XX | 5.47 | | | | | | | | | | |
| | 3/1 Channel System in combination per month | | | UNCSX | MQ3 | 196.22 | | | | | | | | | | |
| | **4-WIRE 56 KBPS DIGITAL LOOP WITH 56 KBPS INTEROFFICE TRANSPORT** | | | | | | | | | | | | | | | |
| | 4-wire 56 kbps Local Loop in combination - Zone 1 | | 1 | UNCDX | UDL56 | 31.56 | | | | | | | | | | |
| | 4-wire 56 kbps Local Loop in combination - Zone 2 | | 2 | UNCDX | UDL56 | 39.73 | | | | | | | | | | |
| | 4-wire 56 kbps Local Loop in combination - Zone 3 | | 3 | UNCDX | UDL56 | 46.87 | | | | | | | | | | |
| | 4-wire 56 kbps Local Loop in combination - Zone 4 | | 4 | UNCDX | UDL56 | 37.09 | | | | | | | | | | |
| | Interoffice Transport - Dedicated - 4-wire 56 kbps combination - Per Mile per month | | | UNCDX | 1L5XX | 0.01 | | | | | | | | | | |
| | Interoffice Transport - Dedicated - 4-wire 56 kbps combination - Facility Termination per month | | | UNCDX | U1TD5 | 25.90 | | | | | | | | | | |
| | **4-WIRE 64 KBPS DIGITAL EXTENDED LOOP WITH 64 KBPS INTEROFFICE TRANSPORT** | | | | | | | | | | | | | | | |
| | 4-wire 64 kbps Lcoal Loop in Combination - Zone 1 | | 1 | UNCDX | UDL64 | 31.56 | | | | | | | | | | |
| | 4-wire 64 kbps Lcoal Loop in Combination - Zone 2 | | 2 | UNCDX | UDL64 | 39.73 | | | | | | | | | | |
| | 4-wire 64 kbps Lcoal Loop in Combination - Zone 3 | | 3 | UNCDX | UDL64 | 46.87 | | | | | | | | | | |
| | 4-wire 64 kbps Lcoal Loop in Combination - Zone 4 | | 4 | UNCDX | UDL64 | 37.09 | | | | | | | | | | |
| | Interoffice Transport - Dedicated - 4-wire 64 kbps combination - Per Mile per month | | | UNCDX | 1L5XX | 0.01 | | | | | | | | | | |
| | Interoffice Transport - Dedicated - 4-wire 64 kbps combination - Facility Termination per month | | | UNCDX | U1TD6 | 25.90 | | | | | | | | | | |
| | **4-WIRE 56 KBPS DIGITAL EXTENDED LOOP WITH DS0 INTEROFFICE TRANSPORT** | | | | | | | | | | | | | | | |
| | 4-wire 56 kbps Local Loop in combination - Zone 1 | | 1 | UNCDX | UDL56 | 31.56 | | | | | | | | | | |
| | 4-wire 56 kbps Local Loop in combination - Zone 2 | | 2 | UNCDX | UDL56 | 39.73 | | | | | | | | | | |
| | 4-wire 56 kbps Local Loop in combination - Zone 3 | | 3 | UNCDX | UDL56 | 46.87 | | | | | | | | | | |
| | 4-wire 56 kbps Local Loop in combination - Zone 4 | | 4 | UNCDX | UDL56 | 37.09 | | | | | | | | | | |
| | 4-wiree 56 kbps Interoffice Transport - Dedicated - Per Mile per month | | | UNCDX | 1L5XX | 0.01 | | | | | | | | | | |
| | 4-wire 56 kbps Interoffice Transport - Dedicated - Facility Termination per month | | | UNCDX | U1TD5 | 25.90 | | | | | | | | | | |
| | **4-WIRE 64 KBPS DIGITAL EXTENDED LOOP WITH DS0 INTEROFFICE TRANSPORT** | | | | | | | | | | | | | | | |
| | 4-wire 64 kbps Local Loop in combination - Zone 1 | | 1 | UNCDX | UDL64 | 31.56 | | | | | | | | | | |
| | 4-wire 64 kbps Local Loop in combination - Zone 2 | | 2 | UNCDX | UDL64 | 39.73 | | | | | | | | | | |
| | 4-wire 64 kbps Local Loop in combination - Zone 3 | | 3 | UNCDX | UDL64 | 46.87 | | | | | | | | | | |
| | 4-wire 64 kbps Local Loop in combination - Zone 4 | | 4 | UNCDX | UDL64 | 37.09 | | | | | | | | | | |
| | l4-wire 65 kbps Interoffice Transport - Dedicated - Per Mile per month | | | UNCDX | 1L5XX | 0.01 | | | | | | | | | | |
| | 4-wire 64 kbps Interoffice Transport - Dedicated - Facility Termination per month | | | UNCDX | U1TD6 | 25.90 | | | | | | | | | | |
| | **DS1 DIGITAL LOOP AND DS1 INTERFOFFICE TRANSPORT** | | | | | | | | | | | | | | | |
| | 4-Wire DS1 Digital Loop in Combination - Zone 1 | | 1 | UNC1X | USLXX | 90.94 | | | | | | | | | | |

## UNBUNDLED NETWORK ELEMENTS - Mississippi

Attachment: 2 Exh. B

| CATEGORY | RATE ELEMENTS | Interim | Zone | BCS | USOC | RATES ($) Rec | Nonrecurring | Nonrecurring Add'l | Nonrecurring Disconnect | Nonrecurring Disconnect Add'l | Svc Order Submitted Elec per LSR | Svc Order Submitted Manually per LSR | Incremental Charge - Manual Svc Order vs. Electronic- 1st | Incremental Charge - Manual Svc Order vs. Electronic- Add'l | Incremental Charge - Manual Svc Order vs. Electronic- Disc 1st | Incremental Charge - Manual Svc Order vs. Electronic- Disc Add'l |
|---|---|---|---|---|---|---|---|---|---|---|---|---|---|---|---|---|
| | | | | | | | | | | | OSS Rates ($) | | | | | |
| | | | | | | | | | | | SOMEC | SOMAN | SOMAN | SOMAN | SOMAN | SOMAN |
| | 4-Wire DS1 Digital Loop in Combination - Zone 2 | | 2 | UNC1X | USLXX | 148.79 | | | | | | | | | | |
| | 4-Wire DS1 Digital Loop in Combination - Zone 3 | | 3 | UNC1X | USLXX | 237.75 | | | | | | | | | | |
| | 4-wire DS1 Digital Lcoal Loop in Combination - Zone 4 | | 4 | UNC1X | USLXX | 527.23 | | | | | | | | | | |
| | Interoffice Transport - Dedicated - DS1 combination - Per Mile per month | | | UNC1X | 1L5XX | 0.21 | | | | | | | | | | |
| | Interoffice Transport - Dedicated - DS1 combination - Facility Termination per month | | | UNC1X | U1TF1 | 59.48 | | | | | | | | | | |
| **DS3 DIGITAL LOOP WITH DEDICATED DS3 INTEROFFICE TRANSPORT** | | | | | | | | | | | | | | | | |
| | DS3 Local Loop in combination - per mile per month | | | UNC3X | 1L5ND | 14.81 | | | | | | | | | | |
| | DS3 Local Loop in combination - Facility Termination per month | | | UNC3X | UE3PX | 431.33 | | | | | | | | | | |
| | Interoffice Transport - Dedicated - DS3 - Per Mile per month | | | UNC3X | 1L5XX | 5.47 | | | | | | | | | | |
| | Interoffice Transport - Dedicated - DS3 combination - Facility Termination per month | | | UNC3X | U1TF3 | 738.18 | | | | | | | | | | |
| **STS-1 DIGITAL LOOP WITH DEDICATED STS-1 INTEROFFICE TRANSPORT** | | | | | | | | | | | | | | | | |
| | STS-1 Local Lolp in combination - per mile per month | | | UNCSX | 1L5ND | 14.81 | | | | | | | | | | |
| | STS-1 Local Loop in combination - Facility Termination per month | | | UNCSX | UDLS1 | 447.73 | | | | | | | | | | |
| | Interoffice Transport - Dedicated - STS-1 combination - per mile per month | | | UNCSX | 1L5XX | 5.47 | | | | | | | | | | |
| | Interoffice Transport - Dedicated - STS-1 combination - Facility Termination per month | | | UNCSX | U1TFS | 740.84 | | | | | | | | | | |
| **ADDITIONAL NETWORK ELEMENTS** | | | | | | | | | | | | | | | | |
| **When used as a part of a currently combined facility, the non-recurrng charges do not apply, but a Switch As Is charge does apply.** | | | | | | | | | | | | | | | | |
| **When used as ordinarily combined network elements in All States, the non-recurring charges apply and the Switch As Is Charge does not.** | | | | | | | | | | | | | | | | |
| **Nonrecurring Currently Combined Network Elements "Switch As Is" Charge (One applies to each combination)** | | | | | | | | | | | | | | | | |
| **Optional Features & Functions:** | | | | | | | | | | | | | | | | |
| | Clear Channel Capability Extended Frame Option - per DS1 | I | | U1TD1, ULDD1,UNC1X | CCOEF | | 0.00 | 0.00 | 0.00 | 0.00 | | | | | | |
| | Clear Channel Capability Super FrameOption - per DS1 | I | | U1TD1, ULDD1,UNC1X | CCOSF | | 0.00 | 0.00 | 0.00 | 0.00 | | | | | | |
| | Clear Channel Capability (SF/ESF) Option - Subsequent Activity - per DS1 | I | | ULDD1, U1TD1, UNC1X, USL | NRCCC | | 184.60 | 23.78 | 1.96 | 0.76 | | | | | | |
| | C-bit Parity Option - Subsequent Activity - per DS3 | i | | U1TD3, ULDD3, UE3, UNC3X | NRCC3 | | 218.72 | 7.66 | 0.7201 | 0.00 | | | | | | |
| **MULTIPLEXERS** | | | | | | | | | | | | | | | | |
| | DS1 to DS0 Channel System per month | | | UNC1X | MQ1 | 118.28 | | | | | | | | | | |
| | OCU-DP COCI (data) - DS1 to DS0 Channel System - per month (2.4-64kbs) used for a Local Loop | | | UDL | 1D1DD | 1.40 | | | | | | | | | | |
| | OCU-DP COCI (data) - DS1 to DS0 Channel System - per month (2.4-64kbs) used for connection to a channelized DS1 Local Channel in the same SWC as collocation | | | U1TUD | 1D1DD | 1.40 | | | | | | | | | | |
| | 2-wire ISDN COCI (BRITE) - DS1 to DS0 Channel Systsem - per month for a Local Loop | | | UDN | UC1CA | 3.01 | | | | | | | | | | |
| | 2-wire ISDN COCI (BRITE) - DS1 to DS0 Channel Systsem - per month used for connection to a channelized DS1 Local Channel in the same SWC as collocation | | | U1TUB | UC1CA | 3.01 | | | | | | | | | | |
| | Voice Grade COCI - DS1 to DS0 Channel System - per month used for a Local Loop | | | UEA | 1D1VG | 0.66 | | | | | | | | | | |
| | Voice Grade COCI - DS1 to DS0 Channel System - per month used for connection to a channelized DS1 Local Channel in the same SWC as collocation | | | U1TUC | 1D1VG | 0.66 | | | | | | | | | | |
| | DS3 to DS1 Channel System per month | | | UNC3X | MQ3 | 196.22 | | | | | | | | | | |
| | STS-1 to DS1 Channel System per month | | | UNCSX | MQ3 | 196.22 | | | | | | | | | | |
| | DS1 COCI used with Loop per month | | | USL | UC1D1 | 14.90 | | | | | | | | | | |
| | DS1 COCI (used for connection to a channelized DS1 Local Channel in the same SWC as collocation) per month | | | U1TUA | UC1D1 | 14.90 | | | | | | | | | | |
| | DS1 COCI used with Interoffice Channel per month | | | U1TD1 | UC1D1 | 14.90 | | | | | | | | | | |

| UNBUNDLED NETWORK ELEMENTS - Mississippi | | | | | | | | | | | | | | Attachment: 2 Exh. B | | | |
|---|---|---|---|---|---|---|---|---|---|---|---|---|---|---|---|---|---|
| CATEGORY | | RATE ELEMENTS | Interim | Zone | BCS | USOC | RATES ($) | | | | | Svc Order Submitted Elec per LSR | Svc Order Submitted Manually per LSR | Incremental Charge - Manual Svc Order vs. Electronic-1st | Incremental Charge - Manual Svc Order vs. Electronic-Add'l | Incremental Charge - Manual Svc Order vs. Electronic-Disc 1st | Incremental Charge - Manual Svc Order vs. Electronic-Disc Add'l |
| | | | | | | | Rec | Nonrecurring | | Nonrecurring Disconnect | | OSS Rates ($) | | | | | |
| | | | | | | | | | Add'l | | Add'l | SOMEC | SOMAN | SOMAN | SOMAN | SOMAN | SOMAN |
| | | DS3 Interface Unit (DS1 COCI) used with Local Channel per month | | | ULDD1 | UC1D1 | 14.90 | | | | | | | | | | |

| UNBUNDLED NETWORK ELEMENTS - North Carolina | | | | | | | | | | | | | | Attachment: 2 Exh. B | | | |
|---|---|---|---|---|---|---|---|---|---|---|---|---|---|---|---|---|---|
| CATEGORY | | RATE ELEMENTS | Interim | Zone | BCS | USOC | RATES ($) | | | | | Svc Order Submitted Elec per LSR | Svc Order Submitted Manually per LSR | Incremental Charge - Manual Svc Order vs. Electronic-1st | Incremental Charge - Manual Svc Order vs. Electronic-Add'l | Incremental Charge - Manual Svc Order vs. Electronic-Disc 1st | Incremental Charge - Manual Svc Order vs. Electronic-Disc Add'l |
| | | | | | | | Rec | Nonrecurring | | Nonrecurring Disconnect | | OSS Rates ($) | | | | | |
| | | | | | | | | First | Add'l | First | Add'l | SOMEC | SOMAN | SOMAN | SOMAN | SOMAN | SOMAN |
| **UNBUNDLED EXCHANGE ACCESS LOOP** | | | | | | | | | | | | | | | | | |
| | **2-WIRE HIGH BIT RATE DIGITAL SUBSCRIBER LINE (HDSL) COMPATIBLE LOOP** | | | | | | | | | | | | | | | | |
| | | 2 Wire Unbundled HDSL Loop including manual service inquiry & facility reservation - Zone 1 | | 1 | UHL | UHL2X | 10.36 | | | | | | | | | | |
| | | 2 Wire Unbundled HDSL Loop including manual service inquiry & facility reservation - Zone 2 | | 2 | UHL | UHL2X | 17.10 | | | | | | | | | | |
| | | 2 Wire Unbundled HDSL Loop including manual service inquiry & facility reservation - Zone 3 | | 3 | UHL | UHL2X | 26.24 | | | | | | | | | | |
| | | 2 Wire Unbundled HDSL Loop without manual service inquiry and facility reservation - Zone 1 | | 1 | UHL | UHL2W | 10.36 | | | | | | | | | | |
| | | 2 Wire Unbundled HDSL Loop without manual service inquiry and facility reservation - Zone 2 | | 2 | UHL | UHL2W | 17.10 | | | | | | | | | | |
| | | 2 Wire Unbundled HDSL Loop without manual service inquiry and facility reservation - Zone 3 | | 3 | UHL | UHL2W | 26.24 | | | | | | | | | | |
| | **4-WIRE HIGH BIT RATE DIGITAL SUBSCRIBER LINE (HDSL) COMPATIBLE LOOP** | | | | | | | | | | | | | | | | |
| | | 4 Wire Unbundled HDSL Loop including manual service inquiry and facility reservation - Zone 1 | | 1 | UHL | UHL4X | 12.21 | | | | | | | | | | |
| | | 4-Wire Unbundled HDSL Loop including manual service inquiry and facility reservation - Zone 2 | | 2 | UHL | UHL4X | 20.32 | | | | | | | | | | |
| | | 4-Wire Unbundled HDSL Loop including manual service inquiry and facility reservation - Zone 3 | | 3 | UHL | UHL4X | 31.33 | | | | | | | | | | |
| | | 4-Wire Unbundled HDSL Loop without manual service inquiry and facility reservation - Zone 1 | | 1 | UHL | UHL4W | 12.21 | | | | | | | | | | |
| | | 4-Wire Unbundled HDSL Loop without manual service inquiry and facility reservation - Zone 2 | | 2 | UHL | UHL4W | 20.32 | | | | | | | | | | |
| | | 4-Wire Unbundled HDSL Loop without manual service inquiry and facility reservation - Zone 3 | | 3 | UHL | UHL4W | 31.33 | | | | | | | | | | |
| | **4-WIRE DS1 DIGITAL LOOP** | | | | | | | | | | | | | | | | |
| | | 4-Wire DS1 Digital Loop - Zone 1 | | 1 | USL | USLXX | 54.74 | | | | | | | | | | |
| | | 4-Wire DS1 Digital Loop - Zone 2 | | 2 | USL | USLXX | 97.01 | | | | | | | | | | |
| | | 4-Wire DS1 Digital Loop - Zone 3 | | 3 | USL | USLXX | 154.43 | | | | | | | | | | |
| **HIGH CAPACITY UNBUNDLED LOCAL LOOP** | | | | | | | | | | | | | | | | | |
| | | High Capacity Unbundled Local Loop - DS3 - Per Mile per month | | | UE3 | 1L5ND | 15.33 | | | | | | | | | | |
| | | High Capacity Unbundled Local Loop - DS3 - Facility Termination per month | | | UE3 | UE3PX | 518.29 | | | | | | | | | | |
| | | High Capacity Unbundled Local Loop - STS-1 - Per Mile per month | | | UDLSX | 1L5ND | 15.33 | | | | | | | | | | |
| | | High Capacity Unbundled Local Loop - STS-1 - Facility Termination per month | | | UDLSX | UDLS1 | 533.90 | | | | | | | | | | |
| **UNBUNDLED DEDICATED TRANSPORT** | | | | | | | | | | | | | | | | | |
| | **INTEROFFICE CHANNEL - DEDICATED TRANSPORT** | | | | | | | | | | | | | | | | |
| | | Interoffice Channel - Dedicated Channel - DS1 - Per Mile per month | | | U1TD1 | 1L5XX | 0.66 | | | | | | | | | | |
| | | Interoffice Channel - Dedicated Tranport - DS1 - Facility Termination | | | U1TD1 | U1TF1 | 81.98 | | | | | | | | | | |
| | | Interoffice Channel - Dedicated Transport - DS3 - Per Mile per month | | | U1TD3 | 1L5XX | 14.93 | | | | | | | | | | |
| | | Interoffice Channel - Dedicated Transport - DS3 - Facility Termination per month | | | U1TD3 | U1TF3 | 828.44 | | | | | | | | | | |
| | | Interoffice Channel - Dedicated Transport - STS-1 - Per Mile per month | | | U1TS1 | 1L5XX | 7.06 | | | | | | | | | | |
| | | Interoffice Channel - Dedicated Transport - STS-1 - Facility Termination | | | U1TS1 | U1TFS | 908.93 | | | | | | | | | | |
| | | Local Channel - Dedicated - 2-Wire Voice Grade - Zone 1 | | 1 | ULDVX, UNCVX | ULDV2 | 12.93 | | | | | | | | | | |
| | | Local Channel - Dedicated - 2-Wire Voice Grade - Zone 2 | | 2 | ULDVX, UNCVX | ULDV2 | 22.90 | | | | | | | | | | |
| | | Local Channel - Dedicated - 2-Wire Voice Grade - Zone 3 | | 3 | ULDVX, UNCVX | ULDV2 | 36.46 | | | | | | | | | | |
| | | Local Channel - Dedicated - 4-Wire Voice Grade - Zone 1 | | 1 | ULDVX, UNCVX | ULDV4 | 13.83 | | | | | | | | | | |

## UNBUNDLED NETWORK ELEMENTS - North Carolina

Attachment: 2 Exh. B

| CATEGORY | RATE ELEMENTS | Interim | Zone | BCS | USOC | RATES ($) Rec | Nonrecurring First | Nonrecurring Add'l | Nonrecurring Disconnect First | Nonrecurring Disconnect Add'l | Svc Order Submitted Elec per LSR | Svc Order Submitted Manually per LSR | Incremental Charge - Manual Svc Order vs. Electronic- 1st | Incremental Charge - Manual Svc Order vs. Electronic- Add'l | Incremental Charge - Manual Svc Order vs. Electronic- Disc 1st | Incremental Charge - Manual Svc Order vs. Electronic- Disc Add'l |
|---|---|---|---|---|---|---|---|---|---|---|---|---|---|---|---|---|
| | | | | | | | | | | | OSS Rates ($) | | | | | |
| | | | | | | | | | | | SOMEC | SOMAN | SOMAN | SOMAN | SOMAN | SOMAN |
| | Local Channel - Dedicated - 4-Wire Voice Grade - Zone 2 | | 2 | ULDVX, UNCVX | ULDV4 | 24.53 | | | | | | | | | | |
| | Local Channel - Dedicated - 4-Wire Voice Grade - Zone 3 | | 3 | ULDVX, UNCVX | ULDV4 | 39.04 | | | | | | | | | | |
| | Local Channel - Dedicated - DS1 - Zone 1 | | 1 | ULDD1, UNC1X | ULDF1 | 31.11 | | | | | | | | | | |
| | Local Channel - Dedicated - DS1 - Zone 2 | | 2 | ULDD1, UNC1X | ULDF1 | 55.13 | | | | | | | | | | |
| | Local Channel - Dedicated - DS1 - Zone 3 | | 3 | ULDD1, UNC1X | ULDF1 | 87.77 | | | | | | | | | | |
| | Local Channel - Dedicated - DS3 - Per Mile per month | | | ULDD3, UNC3X | 1L5NC | 1.14 | | | | | | | | | | |
| | Local Channel - Dedicated - DS3 - Facility Termination | | | ULDD3, UNC3X | ULDF3 | 343.76 | | | | | | | | | | |
| | Local Channel - Dedicated - STS-1- Per Mile per month | | | ULDS1, UNCSX | 1L5NC | 1.14 | | | | | | | | | | |
| | Local Channel - Dedicated - STS-1 - Facility Termination | | | ULDS1, UNCSX | ULDFS | 329.05 | | | | | | | | | | |
| **ENHANCED EXTENDED LINK (EELs)** | | | | | | | | | | | | | | | | |
| | **NOTE: The monthly recurring and non-recurring charges below will apply and the Switch-As-Is Charge will not apply for UNE combinations provisioned as ' Ordinarily Combined' Network Elements.** | | | | | | | | | | | | | | | |
| | **NOTE: The monthly recurring and the Switch-As-Is Charge and not the non-recurring charges below will apply for UNE combinations provisioned as ' Currently Combined' Network Elements.** | | | | | | | | | | | | | | | |
| | **2-WIRE VOICE GRADE LOOP FOR USE IN A COMBINATION** | | | | | | | | | | | | | | | |
| | 2-Wire VG Loop (SL2) in Combination - Zone 1 | | 1 | UNCVX | UEAL2 | 17.22 | | | | | | | | | | |
| | 2-Wire VG Loop (SL2) in Combination - Zone 2 | | 2 | UNCVX | UEAL2 | 29.82 | | | | | | | | | | |
| | 2-Wire VG Loop (SL2) in Combination - Zone 3 | | 3 | UNCVX | UEAL2 | 46.93 | | | | | | | | | | |
| | Voice Grade COCI - Per Month | | | UNCVX | 1D1VG | 1.46 | | | | | | | | | | |
| | **4-WIRE VOICE GRADE LOOP FOR USE IN A COMBINATION** | | | | | | | | | | | | | | | |
| | 4-Wire Analog Voice Grade Loop in Combination - Zone 1 | | 1 | UNCVX | UEAL4 | 24.52 | | | | | | | | | | |
| | 4-Wire Analog Voice Grade Loop in Combination - Zone 2 | | 2 | UNCVX | UEAL4 | 41.71 | | | | | | | | | | |
| | 4-Wire Analog Voice Grade Loop in Combination - Zone 3 | | 3 | UNCVX | UEAL4 | 65.06 | | | | | | | | | | |
| | Voice Grade COCI in combination - per month | | | UNCVX | 1D1VG | 1.46 | | | | | | | | | | |
| | **4-WIRE 56 KBPS DIGITAL LOOP FOR USE IN A COMBINATION** | | | | | | | | | | | | | | | |
| | 4-Wire 56Kbps Digital Grade Loop in Combination - Zone 1 | | 1 | UNCDX | UDL56 | 29.12 | | | | | | | | | | |
| | 4-Wire 56Kbps Digital Grade Loop in Combination - Zone 2 | | 2 | UNCDX | UDL56 | 49.58 | | | | | | | | | | |
| | 4-Wire 56Kbps Digital Grade Loop in Combination - Zone 3 | | 3 | UNCDX | UDL56 | 77.35 | | | | | | | | | | |
| | OCU-DP COCI (data) per month (2.4-64kbs) | | | UNCDX | 1D1DD | 2.30 | | | | | | | | | | |
| | **4-WIRE 64 KBPS DIGITAL LOOP FOR USE IN A COMBINATI\ON** | | | | | | | | | | | | | | | |
| | 4-Wire 64Kbps Digital Grade Loop in Combination - Zone 1 | | 1 | UNCDX | UDL64 | 29.12 | | | | | | | | | | |
| | 4-Wire 64Kbps Digital Grade Loop in Combination - Zone 2 | | 2 | UNCDX | UDL64 | 49.58 | | | | | | | | | | |
| | 4-Wire 64Kbps Digital Grade Loop in Combination - Zone 3 | | 3 | UNCDX | UDL64 | 77.35 | | | | | | | | | | |
| | OCU-DP COCI (data) - in combination - per month (2.4-64kbs) | | | UNCDX | 1D1DD | 2.30 | | | | | | | | | | |
| | **2-WIRE ISDN LOOP FOR USE IN COMBINATION** | | | | | | | | | | | | | | | |
| | 2-Wire ISDN Loop in Combination - Zone 1 | | 1 | UNCNX | U1L2X | 22.33 | | | | | | | | | | |
| | 2-Wire ISDN Loop in Combination - Zone 2 | | 2 | UNCNX | U1L2X | 37.81 | | | | | | | | | | |
| | 2-Wire ISDN Loop in Combination - Zone 3 | | 3 | UNCNX | U1L2X | 58.81 | | | | | | | | | | |
| | 2-wire ISDN COCI (BRITE) - in combination - per month | | | UNCNX | UC1CA | 4.13 | | | | | | | | | | |
| | **4-WIRE DS1 DIGITAL LOOP FOR USE IN A COMBINATION** | | | | | | | | | | | | | | | |
| | 4-Wire DS1 Digital Loop in Combination - Zone 1 | | 1 | UNC1X | USLXX | 54.74 | | | | | | | | | | |
| | 4-Wire DS1 Digital Loop in Combination - Zone 2 | | 2 | UNC1X | USLXX | 97.01 | | | | | | | | | | |
| | 4-Wire DS1 Digital Loop in Combination - Zone 3 | | 3 | UNC1X | USLXX | 154.43 | | | | | | | | | | |
| | DS1 COCI in combination per month | | | UNC1X | UC1D1 | 18.48 | | | | | | | | | | |
| | **2 WIRE VOICE GRADE INTEROFFICE TRANSPORT FOR USE IN A COMBINATION** | | | | | | | | | | | | | | | |
| | Interoffice Transport - 2-wire VG - Dedicated- Per Mile Per Month | | | UNCVX | 1L5XX | 0.03 | | | | | | | | | | |
| | Interoffice Transport - 2-wire VG - Dedicated - Facility Termination per month | | | UNCVX | U1TV2 | 20.70 | | | | | | | | | | |
| | **4 WIRE VOICE GRADE INTEROFFICE TRANSPORT FOR USE IN A COMBINATION** | | | | | | | | | | | | | | | |
| | Interoffice Transport - 4-wire VG - Dedicated - Per Mile Per Month | | | UNCVX | 1L5XX | 0.03 | | | | | | | | | | |
| | Interoffice Transport - 4-wire VG - Dedicated - Facility Termination per month | | | UNCVX | U1TV4 | 22.16 | | | | | | | | | | |
| | **DS1 INTEROFFICE TRANSPORT FOR COMBINATION** | | | | | | | | | | | | | | | |
| | Interoffice Transport - Dedicated - DS1 combination - Per Mile per month | | | UNC1X | 1L5XX | 0.66 | | | | | | | | | | |
| | Interoffice Transport - Dedicated - DS1 combination - Facility Termination per month | | | UNC1X | U1TF1 | 81.98 | | | | | | | | | | |
| | **DS3 INTEROFFICE TRANSPORT FOR USE IN A COMBINATION** | | | | | | | | | | | | | | | |

| CATEGORY | RATE ELEMENTS | Interim | Zone | BCS | USOC | RATES ($) | | | | | Svc Order Submitted Elec per LSR | Svc Order Submitted Manually per LSR | Incremental Charge - Manual Svc Order vs. Electronic-1st | Incremental Charge - Manual Svc Order vs. Electronic-Add'l | Incremental Charge - Manual Svc Order vs. Electronic-Disc 1st | Incremental Charge - Manual Svc Order vs. Electronic-Disc Add'l |
|---|---|---|---|---|---|---|---|---|---|---|---|---|---|---|---|---|
| | | | | | | Rec | Nonrecurring | | Nonrecurring Disconnect | | OSS Rates ($) | | | | | |
| | | | | | | | First | Add'l | First | Add'l | SOMEC | SOMAN | SOMAN | SOMAN | SOMAN | SOMAN |
| | Interoffice Transport - Dedicated - DS3 combination - Per Mile Per Month | | | UNC3X | 1L5XX | 14.93 | | | | | | | | | | |
| | Interoffice Transport - Dedicated - DS3 - Facility Termination per month | | | UNC3X | U1TF3 | 828.44 | | | | | | | | | | |
| **STS-1 INTEROFFICE TRANSPORT FOR USE IN COMBINATION** | | | | | | | | | | | | | | | | |
| | Interoffice Transport - Dedicated - STS-1 combination - Per Mile Per Month | | | UNCSX | 1L5XX | 7.06 | | | | | | | | | | |
| | Interoffice Transport - Dedicated - STS-1 combination - Facility Termination per month | | | UNCSX | U1TFS | 908.93 | | | | | | | | | | |
| **4-WIRE 56 KBPS DIGITAL LOOP WITH 56 KBPS INTEROFFICE TRANSPORT** | | | | | | | | | | | | | | | | |
| | 4-wire 56 kbps Local Loop in combination - Zone 1 | | 1 | UNCDX | UDL56 | 29.12 | | | | | | | | | | |
| | 4-wire 56 kbps Local Loop in combination - Zone 2 | | 2 | UNCDX | UDL56 | 49.58 | | | | | | | | | | |
| | 4-wire 56 kbps Local Loop in combination - Zone 3 | | 3 | UNCDX | UDL56 | 77.35 | | | | | | | | | | |
| | Interoffice Transport - Dedicated - 4-wire 56 kbps combination - Per Mile per month | | | UNCDX | 1L5XX | 0.03 | | | | | | | | | | |
| | Interoffice Transport - Dedicated - 4-wire 56 kbps combination - Facility Termination per month | | | UNCDX | U1TD5 | 20.01 | | | | | | | | | | |
| **4-WIRE 64 KBPS DIGITAL EXTENDED LOOP WITH 64 KBPS INTEROFFICE TRANSPORT** | | | | | | | | | | | | | | | | |
| | 4-wire 64 kbps Lcoal Loop in Combination - Zone 1 | | 1 | UNCDX | UDL64 | 29.12 | | | | | | | | | | |
| | 4-wire 64 kbps Lcoal Loop in Combination - Zone 2 | | 2 | UNCDX | UDL64 | 49.58 | | | | | | | | | | |
| | 4-wire 64 kbps Lcoal Loop in Combination - Zone 3 | | 3 | UNCDX | UDL64 | 77.35 | | | | | | | | | | |
| | Interoffice Transport - Dedicated - 4-wire 64 kbps combination - Per Mile per month | | | UNCDX | 1L5XX | 0.03 | | | | | | | | | | |
| | Interoffice Transport - Dedicated - 4-wire 64 kbps combination - Facility Termination per month | | | UNCDX | U1TD6 | 20.01 | | | | | | | | | | |
| **4-WIRE 56 KBPS DIGITAL EXTENDED LOOP WITH DS0 INTEROFFICE TRANSPORT** | | | | | | | | | | | | | | | | |
| | 4-wire 56 kbps Local Loop in combination - Zone 1 | | 1 | UNCDX | UDL56 | 29.12 | | | | | | | | | | |
| | 4-wire 56 kbps Local Loop in combination - Zone 2 | | 2 | UNCDX | UDL56 | 49.58 | | | | | | | | | | |
| | 4-wire 56 kbps Local Loop in combination - Zone 3 | | 3 | UNCDX | UDL56 | 77.35 | | | | | | | | | | |
| | 4-wiree 56 kbps Interoffice Transport - Dedicated - Per Mile per month | | | UNCDX | 1L5XX | 0.03 | | | | | | | | | | |
| | 4-wire 56 kbps Interoffice Transport - Dedicated - Facility Termination per month | | | UNCDX | U1TD5 | 20.01 | | | | | | | | | | |
| **4-WIRE 64 KBPS DIGITAL EXTENDED LOOP WITH DS0 INTEROFFICE TRANSPORT** | | | | | | | | | | | | | | | | |
| | 4-wire 64 kbps Local Loop in combination - Zone 1 | | 1 | UNCDX | UDL64 | 29.12 | | | | | | | | | | |
| | 4-wire 64 kbps Local Loop in combination - Zone 2 | | 2 | UNCDX | UDL64 | 49.58 | | | | | | | | | | |
| | 4-wire 64 kbps Local Loop in combination - Zone 3 | | 3 | UNCDX | UDL64 | 77.35 | | | | | | | | | | |
| | I4-wire 65 kbps Interoffice Transport - Dedicated - Per Mile per month | | | UNCDX | 1L5XX | 0.03 | | | | | | | | | | |
| | 4-wire 64 kbps Interoffice Transport - Dedicated - Facility Termination per month | | | UNCDX | U1TD6 | 20.01 | | | | | | | | | | |
| **DS1 DIGITAL LOOP AND DS1 INTERFOFFICE TRANSPORT** | | | | | | | | | | | | | | | | |
| | 4-Wire DS1 Digital Loop in Combination - Zone 1 | | 1 | UNC1X | USLXX | 54.74 | | | | | | | | | | |
| | 4-Wire DS1 Digital Loop in Combination - Zone 2 | | 2 | UNC1X | USLXX | 97.01 | | | | | | | | | | |
| | 4-Wire DS1 Digital Loop in Combination - Zone 3 | | 3 | UNC1X | USLXX | 154.43 | | | | | | | | | | |
| | Interoffice Transport - Dedicated - DS1 combination - Per Mile per month | | | UNC1X | 1L5XX | 0.66 | | | | | | | | | | |
| | Interoffice Transport - Dedicated - DS1 combination - Facility Termination per month | | | UNC1X | U1TF1 | 81.98 | | | | | | | | | | |
| **DS3 DIGITAL LOOP WITH DEDICATED DS3 INTEROFFICE TRANSPORT** | | | | | | | | | | | | | | | | |
| | DS3 Local Loop in combination - per mile per month | | | UNC3X | 1L5ND | 15.33 | | | | | | | | | | |
| | DS3 Local Loop in combination - Facility Termination per month | | | UNC3X | UE3PX | 518.29 | | | | | | | | | | |
| | Interoffice Transport - Dedicated - DS3 - Per Mile per month | | | UNC3X | 1L5XX | 14.93 | | | | | | | | | | |
| | Interoffice Transport - Dedicated - DS3 combination - Facility Termination per month | | | UNC3X | U1TF3 | 828.44 | | | | | | | | | | |
| **STS-1 DIGITAL LOOP WITH DEDICATED STS-1 INTEROFFICE TRANSPORT** | | | | | | | | | | | | | | | | |
| | STS-1 Local Lolp in combination - per mile per month | | | UNCSX | 1L5ND | 15.33 | | | | | | | | | | |

## UNBUNDLED NETWORK ELEMENTS - North Carolina

Attachment: 2 Exh. B

| CATEGORY | | RATE ELEMENTS | Interim | Zone | BCS | USOC | RATES ($) | | | | | Svc Order Submitted Elec per LSR | Svc Order Submitted Manually per LSR | Incremental Charge - Manual Svc Order vs. Electronic-1st | Incremental Charge - Manual Svc Order vs. Electronic-Add'l | Incremental Charge - Manual Svc Order vs. Electronic-Disc 1st | Incremental Charge - Manual Svc Order vs. Electronic-Disc Add'l |
|---|---|---|---|---|---|---|---|---|---|---|---|---|---|---|---|---|---|
| | | | | | | | Rec | Nonrecurring | | Nonrecurring Disconnect | | OSS Rates ($) | | | | | |
| | | | | | | | | First | Add'l | First | Add'l | SOMEC | SOMAN | SOMAN | SOMAN | SOMAN | SOMAN |
| | | STS-1 Local Loop in combination - Facility Termination per month | | | UNCSX | UDLS1 | 533.90 | | | | | | | | | | |
| | | Interoffice Transport - Dedicated - STS-1 combination - per mile per month | | | UNCSX | 1L5XX | 7.06 | | | | | | | | | | |
| | | Interoffice Transport - Dedicated - STS-1 combination - Facility Termination per month | | | UNCSX | U1TFS | 908.93 | | | | | | | | | | |
| **ADDITIONAL NETWORK ELEMENTS** | | | | | | | | | | | | | | | | | |
| | **When used as a part of a currently combined facility, the non-recurrng charges do not apply, but a Switch As Is charge does apply.** | | | | | | | | | | | | | | | | |
| | **When used as ordinarily combined network elements in All States, the non-recurring charges apply and the Switch As Is Charge does not.** | | | | | | | | | | | | | | | | |
| | **Nonrecurring Currently Combined Network Elements "Switch As Is" Charge (One applies to each combination)** | | | | | | | | | | | | | | | | |
| | **Optional Features & Functions:** | | | | | | | | | | | | | | | | |
| | | Clear Channel Capability Extended Frame Option - per DS1 | I | | U1TD1, ULDD1,UNC1X | CCOEF | | 0.00 | 0.00 | 0.00 | 0.00 | | | | | | |
| | | Clear Channel Capability Super FrameOption - per DS1 | I | | U1TD1, ULDD1,UNC1X | CCOSF | | 0.00 | 0.00 | 0.00 | 0.00 | | | | | | |
| | | Clear Channel Capability (SF/ESF) Option - Subsequent Activity - per DS1 | I | | ULDD1, U1TD1, UNC1X, USL | NRCCC | | 184.76 | 23.80 | 1.99 | 0.78 | | | | | | |
| | | C-bit Parity Option - Subsequent Activity - per DS3 | i | | U1TD3, ULDD3, UE3, UNC3X | NRCC3 | | 218.92 | 7.66 | 0.7576 | 0.00 | | | | | | |
| | **MULTIPLEXERS** | | | | | | | | | | | | | | | | |
| | | DS1 to DS0 Channel System per month | | | UNC1X | MQ1 | 168.69 | | | | | | | | | | |
| | | OCU-DP COCI (data) - DS1 to DS0 Channel System - per month (2.4-64kbs) used for a Local Loop | | | UDL | 1D1DD | 2.30 | | | | | | | | | | |
| | | OCU-DP COCI (data) - DS1 to DS0 Channel System - per month (2.4-64kbs) used for connection to a channelized DS1 Local Channel in the same SWC as collocation | | | U1TUD | 1D1DD | 2.30 | | | | | | | | | | |
| | | 2-wire ISDN COCI (BRITE) - DS1 to DS0 Channel Systsem - per month for a Local Loop | | | UDN | UC1CA | 4.13 | | | | | | | | | | |
| | | 2-wire ISDN COCI (BRITE) - DS1 to DS0 Channel Systsem - per month used for connection to a channelized DS1 Local Channel in the same SWC as collocation | | | U1TUB | UC1CA | 4.13 | | | | | | | | | | |
| | | Voice Grade COCI - DS1 to DS0 Channel System - per month used for a Local Loop | | | UEA | 1D1VG | 1.46 | | | | | | | | | | |
| | | Voice Grade COCI - DS1 to DS0 Channel System - per month used for connection to a channelized DS1 Local Channel in the same SWC as collocation | | | U1TUC | 1D1VG | 1.46 | | | | | | | | | | |
| | | DS3 to DS1 Channel System per month | | | UNC3X | MQ3 | 268.06 | | | | | | | | | | |
| | | STS-1 to DS1 Channel System per month | | | UNCSX | MQ3 | 268.06 | | | | | | | | | | |
| | | DS1 COCI used with Loop per month | | | USL | UC1D1 | 18.48 | | | | | | | | | | |
| | | DS1 COCI (used for connection to a channelized DS1 Local Channel in the same SWC as collocation) per month | | | U1TUA | UC1D1 | 18.48 | | | | | | | | | | |
| | | DS1 COCI used with Interoffice Channel per month | | | U1TD1 | UC1D1 | 18.48 | | | | | | | | | | |
| | | DS3 Interface Unit (DS1 COCI) used with Local Channel per month | | | ULDD1 | UC1D1 | 18.48 | | | | | | | | | | |

## UNBUNDLED NETWORK ELEMENTS - South Carolina

Attachment: 2 Exh. B

| CATEGORY | RATE ELEMENTS | Interim | Zone | BCS | USOC | RATES ($) Rec | Nonrecurring First | Nonrecurring Add'l | Nonrecurring Disconnect First | Nonrecurring Disconnect Add'l | Svc Order Submitted Elec per LSR | Svc Order Submitted Manually per LSR | Incremental Charge - Manual Svc Order vs. Electronic-1st | Incremental Charge - Manual Svc Order vs. Electronic-Add'l | Incremental Charge - Manual Svc Order vs. Electronic-Disc 1st | Incremental Charge - Manual Svc Order vs. Electronic-Disc Add'l |
|---|---|---|---|---|---|---|---|---|---|---|---|---|---|---|---|---|
| | | | | | | | | | | | OSS Rates ($) | | | | | |
| | | | | | | | | | | | SOMEC | SOMAN | SOMAN | SOMAN | SOMAN | SOMAN |
| **UNBUNDLED EXCHANGE ACCESS LOOP** | | | | | | | | | | | | | | | | |
| **2-WIRE HIGH BIT RATE DIGITAL SUBSCRIBER LINE (HDSL) COMPATIBLE LOOP** | | | | | | | | | | | | | | | | |
| | 2 Wire Unbundled HDSL Loop including manual service inquiry & facility reservation - Zone 1 | | 1 | UHL | UHL2X | 11.02 | | | | | | | | | | |
| | 2 Wire Unbundled HDSL Loop including manual service inquiry & facility reservation - Zone 2 | | 2 | UHL | UHL2X | 12.56 | | | | | | | | | | |
| | 2 Wire Unbundled HDSL Loop including manual service inquiry & facility reservation - Zone 3 | | 3 | UHL | UHL2X | 13.11 | | | | | | | | | | |
| | 2 Wire Unbundled HDSL Loop without manual service inquiry and facility reservation - Zone 1 | | 1 | UHL | UHL2W | 11.02 | | | | | | | | | | |
| | 2 Wire Unbundled HDSL Loop without manual service inquiry and facility reservation - Zone 2 | | 2 | UHL | UHL2W | 12.56 | | | | | | | | | | |
| | 2 Wire Unbundled HDSL Loop without manual service inquiry and facility reservation - Zone 3 | | 3 | UHL | UHL2W | 13.11 | | | | | | | | | | |
| **4-WIRE HIGH BIT RATE DIGITAL SUBSCRIBER LINE (HDSL) COMPATIBLE LOOP** | | | | | | | | | | | | | | | | |
| | 4 Wire Unbundled HDSL Loop including manual service inquiry and facility reservation - Zone 1 | | 1 | UHL | UHL4X | 18.42 | | | | | | | | | | |
| | 4-Wire Unbundled HDSL Loop including manual service inquiry and facility reservation - Zone 2 | | 2 | UHL | UHL4X | 16.48 | | | | | | | | | | |
| | 4-Wire Unbundled HDSL Loop including manual service inquiry and facility reservation - Zone 3 | | 3 | UHL | UHL4X | 19.37 | | | | | | | | | | |
| | 4-Wire Unbundled HDSL Loop without manual service inquiry and facility reservation - Zone 1 | | 1 | UHL | UHL4W | 18.42 | | | | | | | | | | |
| | 4-Wire Unbundled HDSL Loop without manual service inquiry and facility reservation - Zone 2 | | 2 | UHL | UHL4W | 16.48 | | | | | | | | | | |
| | 4-Wire Unbundled HDSL Loop without manual service inquiry and facility reservation - Zone 3 | | 3 | UHL | UHL4W | 19.37 | | | | | | | | | | |
| **4-WIRE DS1 DIGITAL LOOP** | | | | | | | | | | | | | | | | |
| | 4-Wire DS1 Digital Loop - Zone 1 | | 1 | USL | USLXX | 91.44 | | | | | | | | | | |
| | 4-Wire DS1 Digital Loop - Zone 2 | | 2 | USL | USLXX | 156.40 | | | | | | | | | | |
| | 4-Wire DS1 Digital Loop - Zone 3 | | 3 | USL | USLXX | 263.52 | | | | | | | | | | |
| **HIGH CAPACITY UNBUNDLED LOCAL LOOP** | | | | | | | | | | | | | | | | |
| | High Capacity Unbundled Local Loop - DS3 - Per Mile per month | | | UE3 | 1L5ND | 14.10 | | | | | | | | | | |
| | High Capacity Unbundled Local Loop - DS3 - Facility Termination per month | | | UE3 | UE3PX | 352.31 | | | | | | | | | | |
| | High Capacity Unbundled Local Loop - STS-1 - Per Mile per month | | | UDLSX | 1L5ND | 14.10 | | | | | | | | | | |
| | High Capacity Unbundled Local Loop - STS-1 - Facility Termination per month | | | UDLSX | UDLS1 | 360.51 | | | | | | | | | | |
| **UNBUNDLED DEDICATED TRANSPORT** | | | | | | | | | | | | | | | | |
| **INTEROFFICE CHANNEL - DEDICATED TRANSPORT** | | | | | | | | | | | | | | | | |
| | Interoffice Channel - Dedicated Channel - DS1 - Per Mile per month | | | U1TD1 | 1L5XX | 0.39 | | | | | | | | | | |
| | Interoffice Channel - Dedicated Tranport - DS1 - Facility Termination | | | U1TD1 | U1TF1 | 88.71 | | | | | | | | | | |
| | Interoffice Channel - Dedicated Transport - DS3 - Per Mile per month | | | U1TD3 | 1L5XX | 9.22 | | | | | | | | | | |
| | Interoffice Channel - Dedicated Transport - DS3 - Facility Termination per month | | | U1TD3 | U1TF3 | 1012.75 | | | | | | | | | | |
| | Interoffice Channel - Dedicated Transport - STS-1 - Per Mile per month | | | U1TS1 | 1L5XX | 9.22 | | | | | | | | | | |
| | Interoffice Channel - Dedicated Transport - STS-1 - Facility Termination | | | U1TS1 | U1TFS | 1012.63 | | | | | | | | | | |
| | Local Channel - Dedicated - 2-Wire Voice Grade | | | ULDVX | ULDV2 | 17.63 | | | | | | | | | | |
| | Local Channel - Dedicated - 2-Wire Voice Grade Rev Bat | | | ULDVX | ULDR2 | 17.63 | | | | | | | | | | |
| | Local Channel - Dedicated - 4-Wire Voice Grade | | | ULDVX, UNCVX | ULDV4 | 19.02 | | | | | | | | | | |
| | Local Channel - Dedicated - DS1 - Zone 1 | | 1 | ULDD1, UNC1X | ULDF1 | 49.01 | | | | | | | | | | |
| | Local Channel - Dedicated - DS1 - Zone 2 | | 2 | ULDD1, UNC1X | ULDF1 | 80.87 | | | | | | | | | | |
| | Local Channel - Dedicated - DS1 - Zone 3 | | 3 | ULDD1, UNC1X | ULDF1 | 219.28 | | | | | | | | | | |
| | Local Channel - Dedicated - DS3 - Per Mile per month | | | ULDD3, UNC3X | 1L5NC | 13.72 | | | | | | | | | | |
| | Local Channel - Dedicated - DS3 - Facility Termination | | | ULDD3, UNC3X | ULDF3 | 512.90 | | | | | | | | | | |
| | Local Channel - Dedicated - STS-1- Per Mile per month | | | ULDS1, UNCSX | 1L5NC | 13.72 | | | | | | | | | | |
| | Local Channel - Dedicated - STS-1 - Facility Termination | | | ULDS1, UNCSX | ULDFS | 500.37 | | | | | | | | | | |
| **ENHANCED EXTENDED LINK (EELs)** | | | | | | | | | | | | | | | | |
| | **NOTE: The monthly recurring and non-recurring charges below will apply and the Switch-As-Is Charge will not apply for UNE combinations provisioned as ' Ordinarily Combined' Network Elements.** | | | | | | | | | | | | | | | |
| | **NOTE: The monthly recurring and the Switch-As-Is Charge and not the non-recurring charges below will apply for UNE combinations provisioned as ' Currently Combined' Network Elements.** | | | | | | | | | | | | | | | |
| **2-WIRE VOICE GRADE LOOP FOR USE IN A COMBINATION** | | | | | | | | | | | | | | | | |
| | 2-Wire VG Loop (SL2) in Combination - Zone 1 | | 1 | UNCVX | UEAL2 | 19.18 | | | | | | | | | | |
| | 2-Wire VG Loop (SL2) in Combination - Zone 2 | | 2 | UNCVX | UEAL2 | 26.60 | | | | | | | | | | |
| | 2-Wire VG Loop (SL2) in Combination - Zone 3 | | 3 | UNCVX | UEAL2 | 32.73 | | | | | | | | | | |
| | Voice Grade COCI - Per Month | | | UNCVX | 1D1VG | 0.64 | | | | | | | | | | |
| **4-WIRE VOICE GRADE LOOP FOR USE IN A COMBINATION** | | | | | | | | | | | | | | | | |
| | 4-Wire Analog Voice Grade Loop in Combination - Zone 1 | | 1 | UNCVX | UEAL4 | 37.48 | | | | | | | | | | |
| | 4-Wire Analog Voice Grade Loop in Combination - Zone 2 | | 2 | UNCVX | UEAL4 | 50.47 | | | | | | | | | | |
| | 4-Wire Analog Voice Grade Loop in Combination - Zone 3 | | 3 | UNCVX | UEAL4 | 49.89 | | | | | | | | | | |
| | Voice Grade COCI in combination - per month | | | UNCVX | 1D1VG | 0.64 | | | | | | | | | | |
| **4-WIRE 56 KBPS DIGITAL LOOP FOR USE IN A COMBINATION** | | | | | | | | | | | | | | | | |
| | 4-Wire 56Kbps Digital Grade Loop in Combination - Zone 1 | | 1 | UNCDX | UDL56 | 34.42 | | | | | | | | | | |

| CATEGORY | RATE ELEMENTS | Interim | Zone | BCS | USOC | RATES ($) | | | | | Svc Order Submitted Elec per LSR | Svc Order Submitted Manually per LSR | Incremental Charge - Manual Svc Order vs. Electronic-1st | Incremental Charge - Manual Svc Order vs. Electronic-Add'l | Incremental Charge - Manual Svc Order vs. Electronic-Disc 1st | Incremental Charge - Manual Svc Order vs. Electronic-Disc Add'l |
|---|---|---|---|---|---|---|---|---|---|---|---|---|---|---|---|---|
| | | | | | | Rec | Nonrecurring | | Nonrecurring Disconnect | | OSS Rates ($) | | | | | |
| | | | | | | | First | Add'l | First | Add'l | SOMEC | SOMAN | SOMAN | SOMAN | SOMAN | SOMAN |
| | 4-Wire 56Kbps Digital Grade Loop in Combination - Zone 2 | | 2 | UNCDX | UDL56 | 39.09 | | | | | | | | | | |
| | 4-Wire 56Kbps Digital Grade Loop in Combination - Zone 3 | | 3 | UNCDX | UDL56 | 39.95 | | | | | | | | | | |
| | OCU-DP COCI (data) per month (2.4-64kbs) | | | UNCDX | 1D1DD | 1.37 | | | | | | | | | | |
| **4-WIRE 64 KBPS DIGITAL LOOP FOR USE IN A COMBINATION** | | | | | | | | | | | | | | | | |
| | 4-Wire 64Kbps Digital Grade Loop in Combination - Zone 1 | | 1 | UNCDX | UDL64 | 34.42 | | | | | | | | | | |
| | 4-Wire 64Kbps Digital Grade Loop in Combination - Zone 2 | | 2 | UNCDX | UDL64 | 39.09 | | | | | | | | | | |
| | 4-Wire 64Kbps Digital Grade Loop in Combination - Zone 3 | | 3 | UNCDX | UDL64 | 39.95 | | | | | | | | | | |
| | OCU-DP COCI (data) - in combination - per month (2.4-64kbs) | | | UNCDX | 1D1DD | 1.37 | | | | | | | | | | |
| **2-WIRE ISDN LOOP FOR USE IN COMBINATION** | | | | | | | | | | | | | | | | |
| | 2-Wire ISDN Loop in Combination - Zone 1 | | 1 | UNCNX | U1L2X | 28.99 | | | | | | | | | | |
| | 2-Wire ISDN Loop in Combination - Zone 2 | | 2 | UNCNX | U1L2X | 37.67 | | | | | | | | | | |
| | 2-Wire ISDN Loop in Combination - Zone 3 | | 3 | UNCNX | U1L2X | 43.36 | | | | | | | | | | |
| | 2-wire ISDN COCI (BRITE) - in combination - per month | | | UNCNX | UC1CA | 2.94 | | | | | | | | | | |
| **4-WIRE DS1 DIGITAL LOOP FOR USE IN A COMBINATION** | | | | | | | | | | | | | | | | |
| | 4-Wire DS1 Digital Loop in Combination - Zone 1 | | 1 | UNC1X | USLXX | 104.50 | | | | | | | | | | |
| | 4-Wire DS1 Digital Loop in Combination - Zone 2 | | 2 | UNC1X | USLXX | 178.74 | | | | | | | | | | |
| | 4-Wire DS1 Digital Loop in Combination - Zone 3 | | 3 | UNC1X | USLXX | 301.17 | | | | | | | | | | |
| | DS1 COCI in combination per month | | | UNC1X | UC1D1 | 9.94 | | | | | | | | | | |
| **2 WIRE VOICE GRADE INTEROFFICE TRANSPORT FOR USE IN A COMBINATION** | | | | | | | | | | | | | | | | |
| | Interoffice Transport - 2-wire VG - Dedicated- Per Mile Per Month | | | UNCVX | 1L5XX | 0.02 | | | | | | | | | | |
| | Interoffice Transport - 2-wire VG - Dedicated - Facility Termination per month | | | UNCVX | U1TV2 | 22.36 | | | | | | | | | | |
| **4 WIRE VOICE GRADE INTEROFFICE TRANSPORT FOR USE IN A COMBINATION** | | | | | | | | | | | | | | | | |
| | Interoffice Transport - 4-wire VG - Dedicated - Per Mile Per Month | | | UNCVX | 1L5XX | 0.02 | | | | | | | | | | |
| | Interoffice Transport - 4-wire VG - Dedicated - Facility Termination per month | | | UNCVX | U1TV4 | 19.58 | | | | | | | | | | |
| **DS1 INTEROFFICE TRANSPORT FOR COMBINATION** | | | | | | | | | | | | | | | | |
| | Interoffice Transport - Dedicated - DS1 combination - Per Mile per month | | | UNC1X | 1L5XX | 0.31 | | | | | | | | | | |
| | Interoffice Transport - Dedicated - DS1 combination - Facility Termination per month | | | UNC1X | U1TF1 | 70.97 | | | | | | | | | | |
| **DS3 INTEROFFICE TRANSPORT FOR USE IN A COMBINATION** | | | | | | | | | | | | | | | | |
| | Interoffice Transport - Dedicated - DS3 combination - Per Mile Per Month | | | UNC3X | 1L5XX | 7.38 | | | | | | | | | | |
| | Interoffice Transport - Dedicated - DS3 - Facility Termination per month | | | UNC3X | U1TF3 | 810.20 | | | | | | | | | | |
| **STS-1 INTEROFFICE TRANSPORT FOR USE IN COMBINATION** | | | | | | | | | | | | | | | | |
| | Interoffice Transport - Dedicated - STS-1 combination - Per Mile Per Month | | | UNCSX | 1L5XX | 7.38 | | | | | | | | | | |
| | Interoffice Transport - Dedicated - STS-1 combination - Facility Termination per month | | | UNCSX | U1TFS | 810.11 | | | | | | | | | | |
| **4-WIRE 56 KBPS DIGITAL LOOP WITH 56 KBPS INTEROFFICE TRANSPORT** | | | | | | | | | | | | | | | | |
| | 4-wire 56 kbps Local Loop in combination - Zone 1 | | 1 | UNCDX | UDL56 | 34.42 | | | | | | | | | | |
| | 4-wire 56 kbps Local Loop in combination - Zone 2 | | 2 | UNCDX | UDL56 | 39.09 | | | | | | | | | | |
| | 4-wire 56 kbps Local Loop in combination - Zone 3 | | 3 | UNCDX | UDL56 | 39.95 | | | | | | | | | | |
| | Interoffice Transport - Dedicated - 4-wire 56 kbps combination - Per Mile per month | | | UNCDX | 1L5XX | 0.02 | | | | | | | | | | |
| | Interoffice Transport - Dedicated - 4-wire 56 kbps combination - Facility Termination per month | | | UNCDX | U1TD5 | 15.42 | | | | | | | | | | |
| **4-WIRE 64 KBPS DIGITAL EXTENDED LOOP WITH 64 KBPS INTEROFFICE TRANSPORT** | | | | | | | | | | | | | | | | |
| | 4-wire 64 kbps Lcoal Loop in Combination - Zone 1 | | 1 | UNCDX | UDL64 | 34.42 | | | | | | | | | | |
| | 4-wire 64 kbps Lcoal Loop in Combination - Zone 2 | | 2 | UNCDX | UDL64 | 39.09 | | | | | | | | | | |
| | 4-wire 64 kbps Lcoal Loop in Combination - Zone 3 | | 3 | UNCDX | UDL64 | 39.95 | | | | | | | | | | |
| | Interoffice Transport - Dedicated - 4-wire 64 kbps combination - Per Mile per month | | | UNCDX | 1L5XX | 0.02 | | | | | | | | | | |
| | Interoffice Transport - Dedicated - 4-wire 64 kbps combination - Facility Termination per month | | | UNCDX | U1TD6 | 15.42 | | | | | | | | | | |
| **4-WIRE 56 KBPS DIGITAL EXTENDED LOOP WITH DS0 INTEROFFICE TRANSPORT** | | | | | | | | | | | | | | | | |
| | 4-wire 56 kbps Local Loop in combination - Zone 1 | | 1 | UNCDX | UDL56 | 34.42 | | | | | | | | | | |
| | 4-wire 56 kbps Local Loop in combination - Zone 2 | | 2 | UNCDX | UDL56 | 39.09 | | | | | | | | | | |
| | 4-wire 56 kbps Local Loop in combination - Zone 3 | | 3 | UNCDX | UDL56 | 39.95 | | | | | | | | | | |
| | 4-wiree 56 kbps Interoffice Transport - Dedicated - Per Mile per month | | | UNCDX | 1L5XX | 0.02 | | | | | | | | | | |
| | 4-wire 56 kbps Interoffice Transport - Dedicated - Facility Termination per month | | | UNCDX | U1TD5 | 15.42 | | | | | | | | | | |
| **4-WIRE 64 KBPS DIGITAL EXTENDED LOOP WITH DS0 INTEROFFICE TRANSPORT** | | | | | | | | | | | | | | | | |
| | 4-wire 64 kbps Local Loop in combination - Zone 1 | | 1 | UNCDX | UDL64 | 34.42 | | | | | | | | | | |
| | 4-wire 64 kbps Local Loop in combination - Zone 2 | | 2 | UNCDX | UDL64 | 39.09 | | | | | | | | | | |
| | 4-wire 64 kbps Local Loop in combination - Zone 3 | | 3 | UNCDX | UDL64 | 39.95 | | | | | | | | | | |
| | l4-wire 65 kbps Interoffice Transport - Dedicated - Per Mile per month | | | UNCDX | 1L5XX | 0.02 | | | | | | | | | | |
| | 4-wire 64 kbps Interoffice Transport - Dedicated - Facility Termination per month | | | UNCDX | U1TD6 | 15.42 | | | | | | | | | | |
| **DS1 DIGITAL LOOP AND DS1 INTERFOFFICE TRANSPORT** | | | | | | | | | | | | | | | | |
| | 4-Wire DS1 Digital Loop in Combination - Zone 1 | | 1 | UNC1X | USLXX | 104.50 | | | | | | | | | | |
| | 4-Wire DS1 Digital Loop in Combination - Zone 2 | | 2 | UNC1X | USLXX | 178.74 | | | | | | | | | | |
| | 4-Wire DS1 Digital Loop in Combination - Zone 3 | | 3 | UNC1X | USLXX | 301.17 | | | | | | | | | | |
| | Interoffice Transport - Dedicated - DS1 combination - Per Mile per month | | | UNC1X | 1L5XX | 0.31 | | | | | | | | | | |

## UNBUNDLED NETWORK ELEMENTS - South Carolina

Attachment: 2 Exh. B

| CATEGORY | RATE ELEMENTS | Interim | Zone | BCS | USOC | RATES ($) Rec | Nonrecurring First | Nonrecurring Add'l | Nonrecurring Disconnect First | Nonrecurring Disconnect Add'l | Svc Order Submitted Elec per LSR | Svc Order Submitted Manually per LSR | Incremental Charge - Manual Svc Order vs. Electronic-1st | Incremental Charge - Manual Svc Order vs. Electronic-Add'l | Incremental Charge - Manual Svc Order vs. Electronic-Disc 1st | Incremental Charge - Manual Svc Order vs. Electronic-Disc Add'l |
|---|---|---|---|---|---|---|---|---|---|---|---|---|---|---|---|---|
| | | | | | | | | | | | OSS Rates ($) | | | | | |
| | | | | | | | | | | | SOMEC | SOMAN | SOMAN | SOMAN | SOMAN | SOMAN |
| | Interoffice Transport - Dedicated - DS1 combination - Facility Termination per month | | | UNC1X | U1TF1 | 70.97 | | | | | | | | | | |
| **DS3 DIGITAL LOOP WITH DEDICATED DS3 INTEROFFICE TRANSPORT** | | | | | | | | | | | | | | | | |
| | DS3 Local Loop in combination - per mile per month | | | UNC3X | 1L5ND | 14.10 | | | | | | | | | | |
| | DS3 Local Loop in combination - Facility Termination per month | | | UNC3X | UE3PX | 352.31 | | | | | | | | | | |
| | Interoffice Transport - Dedicated - DS3 - Per Mile per month | | | UNC3X | 1L5XX | 7.38 | | | | | | | | | | |
| | Interoffice Transport - Dedicated - DS3 combination - Facility Termination per month | | | UNC3X | U1TF3 | 810.20 | | | | | | | | | | |
| **STS-1 DIGITAL LOOP WITH DEDICATED STS-1 INTEROFFICE TRANSPORT** | | | | | | | | | | | | | | | | |
| | STS-1 Local Lolp in combination - per mile per month | | | UNCSX | 1L5ND | 14.10 | | | | | | | | | | |
| | STS-1 Local Loop in combination - Facility Termination per month | | | UNCSX | UDLS1 | 360.51 | | | | | | | | | | |
| | Interoffice Transport - Dedicated - STS-1 combination - per mile per month | | | UNCSX | 1L5XX | 7.38 | | | | | | | | | | |
| | Interoffice Transport - Dedicated - STS-1 combination - Facility Termination per month | | | UNCSX | U1TFS | 810.11 | | | | | | | | | | |
| **ADDITIONAL NETWORK ELEMENTS** | | | | | | | | | | | | | | | | |
| **When used as a part of a currently combined facility, the non-recurrng charges do not apply, but a Switch As Is charge does apply.** | | | | | | | | | | | | | | | | |
| **When used as ordinarily combined network elements in All States, the non-recurring charges apply and the Switch As Is Charge does not.** | | | | | | | | | | | | | | | | |
| **Nonrecurring Currently Combined Network Elements "Switch As Is" Charge (One applies to each combination)** | | | | | | | | | | | | | | | | |
| **Optional Features & Functions:** | | | | | | | | | | | | | | | | |
| | Clear Channel Capability Extended Frame Option - per DS1 | I | | U1TD1, ULDD1,UNC1X | CCOEF | | 0.00 | 0.00 | 0.00 | 0.00 | | | | | | |
| | Clear Channel Capability Super FrameOption - per DS1 | I | | U1TD1, ULDD1,UNC1X | CCOSF | | 0.00 | 0.00 | 0.00 | 0.00 | | | | | | |
| | Clear Channel Capability (SF/ESF) Option - Subsequent Activity - per DS1 | I | | ULDD1, U1TD1, UNC1X, USL | NRCCC | | 185.26 | 23.86 | 1.99 | 0.78 | | | | | | |
| | C-bit Parity Option - Subsequent Activity - per DS3 | i | | U1TD3, ULDD3, UE3, UNC3X | NRCC3 | | 219.58 | 7.69 | 0.737 | 0.00 | | | | | | |
| **MULTIPLEXERS** | | | | | | | | | | | | | | | | |
| | DS1 to DS0 Channel System per month | | | UNC1X | MQ1 | 123.71 | | | | | | | | | | |
| | OCU-DP COCI (data) - DS1 to DS0 Channel System - per month (2.4-64kbs) used for a Local Loop | | | UDL | 1D1DD | 1.37 | | | | | | | | | | |
| | OCU-DP COCI (data) - DS1 to DS0 Channel System - per month (2.4-64kbs) used for connection to a channelized DS1 Local Channel in the same SWC as collocation | | | U1TUD | 1D1DD | 1.37 | | | | | | | | | | |
| | 2-wire ISDN COCI (BRITE) - DS1 to DS0 Channel Systsem - per month for a Local Loop | | | UDN | UC1CA | 2.94 | | | | | | | | | | |
| | 2-wire ISDN COCI (BRITE) - DS1 to DS0 Channel Systsem - per month used for connection to a channelized DS1 Local Channel in the same SWC as collocation | | | U1TUB | UC1CA | 2.94 | | | | | | | | | | |
| | Voice Grade COCI - DS1 to DS0 Channel System - per month used for a Local Loop | | | UEA | 1D1VG | 0.64 | | | | | | | | | | |
| | Voice Grade COCI - DS1 to DS0 Channel System - per month used for connection to a channelized DS1 Local Channel in the same SWC as collocation | | | U1TUC | 1D1VG | 0.64 | | | | | | | | | | |
| | DS3 to DS1 Channel System per month | | | UNC3X | MQ3 | 165.62 | | | | | | | | | | |
| | STS-1 to DS1 Channel System per month | | | UNCSX | MQ3 | 165.62 | | | | | | | | | | |
| | DS1 COCI used with Loop per month | | | USL | UC1D1 | 9.94 | | | | | | | | | | |
| | DS1 COCI (used for connection to a channelized DS1 Local Channel in the same SWC as collocation) per month | | | U1TUA | UC1D1 | 9.94 | | | | | | | | | | |
| | DS1 COCI used with Interoffice Channel per month | | | U1TD1 | UC1D1 | 9.94 | | | | | | | | | | |
| | DS3 Interface Unit (DS1 COCI) used with Local Channel per month | | | ULDD1 | UC1D1 | 9.94 | | | | | | | | | | |

| UNBUNDLED NETWORK ELEMENTS - Tennessee | | | | | | | | | | | | | | Attachment: 2 Exh. B | | | |
|---|---|---|---|---|---|---|---|---|---|---|---|---|---|---|---|---|---|
| CATEGORY | | RATE ELEMENTS | Interim | Zone | BCS | USOC | RATES ($) | | | | | Svc Order Submitted Elec per LSR | Svc Order Submitted Manually per LSR | Incremental Charge - Manual Svc Order vs. Electronic-1st | Incremental Charge - Manual Svc Order vs. Electronic-Add'l | Incremental Charge - Manual Svc Order vs. Electronic-Disc 1st | Incremental Charge - Manual Svc Order vs. Electronic-Disc Add'l |
| | | | | | | | Rec | Nonrecurring | | Nonrecurring Disconnect | | OSS Rates ($) | | | | | |
| | | | | | | | | First | Add'l | First | Add'l | SOMEC | SOMAN | SOMAN | SOMAN | SOMAN | SOMAN |
| **UNBUNDLED EXCHANGE ACCESS LOOP** | | | | | | | | | | | | | | | | | |
| | **2-WIRE HIGH BIT RATE DIGITAL SUBSCRIBER LINE (HDSL) COMPATIBLE LOOP** | | | | | | | | | | | | | | | | |
| | | 2 Wire Unbundled HDSL Loop including manual service inquiry & facility reservation - Zone 1 | | 1 | UHL | UHL2X | 12.45 | | | | | | | | | | |
| | | 2 Wire Unbundled HDSL Loop including manual service inquiry & facility reservation - Zone 2 | | 2 | UHL | UHL2X | 16.27 | | | | | | | | | | |
| | | 2 Wire Unbundled HDSL Loop including manual service inquiry & facility reservation - Zone 3 | | 3 | UHL | UHL2X | 21.28 | | | | | | | | | | |
| | | 2 Wire Unbundled HDSL Loop without manual service inquiry and facility reservation - Zone 1 | I | 1 | UHL | UHL2W | 12.45 | | | | | | | | | | |
| | | 2 Wire Unbundled HDSL Loop without manual service inquiry and facility reservation - Zone 2 | I | 2 | UHL | UHL2W | 16.27 | | | | | | | | | | |
| | | 2 Wire Unbundled HDSL Loop without manual service inquiry and facility reservation - Zone 3 | I | 3 | UHL | UHL2W | 21.28 | | | | | | | | | | |
| | **4-WIRE HIGH BIT RATE DIGITAL SUBSCRIBER LINE (HDSL) COMPATIBLE LOOP** | | | | | | | | | | | | | | | | |
| | | 4 Wire Unbundled HDSL Loop including manual service inquiry and facility reservation - Zone 1 | | 1 | UHL | UHL4X | 16.02 | | | | | | | | | | |
| | | 4-Wire Unbundled HDSL Loop including manual service inquiry and facility reservation - Zone 2 | | 2 | UHL | UHL4X | 20.93 | | | | | | | | | | |
| | | 4-Wire Unbundled HDSL Loop including manual service inquiry and facility reservation - Zone 3 | | 3 | UHL | UHL4X | 27.37 | | | | | | | | | | |
| | | 4-Wire Unbundled HDSL Loop without manual service inquiry and facility reservation - Zone 1 | I | 1 | UHL | UHL4W | 16.02 | | | | | | | | | | |
| | | 4-Wire Unbundled HDSL Loop without manual service inquiry and facility reservation - Zone 2 | I | 2 | UHL | UHL4W | 20.93 | | | | | | | | | | |
| | | 4-Wire Unbundled HDSL Loop without manual service inquiry and facility reservation - Zone 3 | I | 3 | UHL | UHL4W | 27.37 | | | | | | | | | | |
| | **4-WIRE DS1 DIGITAL LOOP** | | | | | | | | | | | | | | | | |
| | | 4-Wire DS1 Digital Loop - Zone 1 | | 1 | USL | USLXX | 66.39 | | | | | | | | | | |
| | | 4-Wire DS1 Digital Loop - Zone 2 | | 2 | USL | USLXX | 86.71 | | | | | | | | | | |
| | | 4-Wire DS1 Digital Loop - Zone 3 | | 3 | USL | USLXX | 113.38 | | | | | | | | | | |
| **HIGH CAPACITY UNBUNDLED LOCAL LOOP** | | | | | | | | | | | | | | | | | |
| | | High Capacity Unbundled Local Loop - DS3 - Per Mile per month | | | UE3 | 1L5ND | 10.57 | | | | | | | | | | |
| | | High Capacity Unbundled Local Loop - DS3 - Facility Termination per month | | | UE3 | UE3PX | 430.38 | | | | | | | | | | |
| | | High Capacity Unbundled Local Loop - STS-1 - Per Mile per month | | | UDLSX | 1L5ND | 10.57 | | | | | | | | | | |
| | | High Capacity Unbundled Local Loop - STS-1 - Facility Termination per month | | | UDLSX | UDLS1 | 447.75 | | | | | | | | | | |
| **UNBUNDLED DEDICATED TRANSPORT** | | | | | | | | | | | | | | | | | |
| | **INTEROFFICE CHANNEL - DEDICATED TRANSPORT** | | | | | | | | | | | | | | | | |
| | | Interoffice Channel - Dedicated Channel - DS1 - Per Mile per month | | | U1TD1 | 1L5XX | 0.41 | | | | | | | | | | |
| | | Interoffice Channel - Dedicated Tranport - DS1 - Facility Termination | | | U1TD1 | U1TF1 | 89.54 | | | | | | | | | | |
| | | Interoffice Channel - Dedicated Transport - DS3 - Per Mile per month | | | U1TD3 | 1L5XX | 2.69 | | | | | | | | | | |
| | | Interoffice Channel - Dedicated Transport - DS3 - Facility Termination per month | | | U1TD3 | U1TF3 | 976.34 | | | | | | | | | | |
| | | Interoffice Channel - Dedicated Transport - STS-1 - Per Mile per month | | | U1TS1 | 1L5XX | 2.69 | | | | | | | | | | |
| | | Interoffice Channel - Dedicated Transport - STS-1 - Facility Termination | | | U1TS1 | U1TFS | 976.70 | | | | | | | | | | |
| | | Local Channel - Dedicated - 2-Wire Voice Grade - Zone 1 | | 1 | ULDVX, UNCVX | ULDV2 | 19.76 | | | | | | | | | | |
| | | Local Channel - Dedicated - 2-Wire Voice Grade - Zone 2 | | 2 | ULDVX, UNCVX | ULDV2 | 25.81 | | | | | | | | | | |
| | | Local Channel - Dedicated - 2-Wire Voice Grade - Zone 3 | | 3 | ULDVX, UNCVX | ULDV2 | 33.74 | | | | | | | | | | |

| UNBUNDLED NETWORK ELEMENTS - Tennessee | | | | | | | | | | | | | | Attachment: 2 Exh. B | | | |
|---|---|---|---|---|---|---|---|---|---|---|---|---|---|---|---|---|---|
| CATEGORY | | RATE ELEMENTS | Interim | Zone | BCS | USOC | RATES ($) | | | | | Svc Order Submitted Elec per LSR | Svc Order Submitted Manually per LSR | Incremental Charge - Manual Svc Order vs. Electronic-1st | Incremental Charge - Manual Svc Order vs. Electronic-Add'l | Incremental Charge - Manual Svc Order vs. Electronic-Disc 1st | Incremental Charge - Manual Svc Order vs. Electronic-Disc Add'l |
| | | | | | | | Rec | Nonrecurring | | Nonrecurring Disconnect | | OSS Rates ($) | | | | | |
| | | | | | | | | First | Add'l | First | Add'l | SOMEC | SOMAN | SOMAN | SOMAN | SOMAN | SOMAN |
| | | Local Channel - Dedicated - 2-Wire Voice Grade Rev. Bat. - Zone 1 | | 1 | ULDVX | ULDR2 | 19.76 | | | | | | | | | | |
| | | Local Channel - Dedicated - 2-Wire Voice Grade Rev. Bat. - Zone 2 | | 2 | ULDVX | ULDR2 | 25.81 | | | | | | | | | | |
| | | Local Channel - Dedicated - 2-Wire Voice Grade Rev. Bat. - Zone 3 | | 3 | ULDVX | ULDR2 | 33.74 | | | | | | | | | | |
| | | Local Channel - Dedicated - 4-Wire Voice Grade - Zone 1 | | 1 | ULDVX, UNCVX | ULDV4 | 20.91 | | | | | | | | | | |
| | | Local Channel - Dedicated - 4-Wire Voice Grade - Zone 2 | | 2 | ULDVX, UNCVX | ULDV4 | 27.30 | | | | | | | | | | |
| | | Local Channel - Dedicated - 4-Wire Voice Grade - Zone 3 | | 3 | ULDVX, UNCVX | ULDV4 | 35.71 | | | | | | | | | | |
| | | Local Channel - Dedicated - DS1 - Zone 1 | | 1 | ULDD1, UNC1X | ULDF1 | 41.68 | | | | | | | | | | |
| | | Local Channel - Dedicated - DS1 - Zone 2 | | 2 | ULDD1, UNC1X | ULDF1 | 54.43 | | | | | | | | | | |
| | | Local Channel - Dedicated - DS1 - Zone 3 | | 3 | ULDD1, UNC1X | ULDF1 | 71.17 | | | | | | | | | | |
| | | Local Channel - Dedicated - DS3 - Per Mile per month | | | ULDD3, UNC3X | 1L5NC | 8.22 | | | | | | | | | | |
| | | Local Channel - Dedicated - DS3 - Facility Termination | | | ULDD3, UNC3X | ULDF3 | 703.00 | | | | | | | | | | |
| | | Local Channel - Dedicated - STS-1- Per Mile per month | | | ULDS1, UNCSX | 1L5NC | 8.22 | | | | | | | | | | |
| | | Local Channel - Dedicated - STS-1 - Facility Termination | | | ULDS1, UNCSX | ULDFS | 689.53 | | | | | | | | | | |
| **ENHANCED EXTENDED LINK (EELs) AND THEIR COMPONETS** | | | | | | | | | | | | | | | | | |
| | **NOTE: The monthly recurring and non-recurring charges below will apply and the Switch-As-Is Charge will not apply for UNE combinations provisioned as ' Ordinarily Combined' Network Elements.** | | | | | | | | | | | | | | | | |
| | **NOTE: The monthly recurring and the Switch-As-Is Charge and not the non-recurring charges below will apply for UNE combinations provisioned as ' Currently Combined' Network Elements.** | | | | | | | | | | | | | | | | |
| | **2-WIRE VOICE GRADE LOOP FOR USE IN A COMBINATION** | | | | | | | | | | | | | | | | |
| | | 2-Wire VG Loop (SL2) in Combination - Zone 1 | | 1 | UNCVX | UEAL2 | 19.04 | | | | | | | | | | |
| | | 2-Wire VG Loop (SL2) in Combination - Zone 2 | | 2 | UNCVX | UEAL2 | 24.87 | | | | | | | | | | |
| | | 2-Wire VG Loop (SL2) in Combination - Zone 3 | | 3 | UNCVX | UEAL2 | 32.52 | | | | | | | | | | |
| | | Voice Grade COCI - Per Month | | | UNCVX | 1D1VG | 1.05 | | | | | | | | | | |
| | **4-WIRE VOICE GRADE LOOP FOR USE IN A COMBINATION** | | | | | | | | | | | | | | | | |
| | | 4-Wire Analog Voice Grade Loop in Combination - Zone 1 | | 1 | UNCVX | UEAL4 | 28.40 | | | | | | | | | | |
| | | 4-Wire Analog Voice Grade Loop in Combination - Zone 2 | | 2 | UNCVX | UEAL4 | 37.10 | | | | | | | | | | |
| | | 4-Wire Analog Voice Grade Loop in Combination - Zone 3 | | 3 | UNCVX | UEAL4 | 48.51 | | | | | | | | | | |
| | | Voice Grade COCI in combination - per month | | | UNCVX | 1D1VG | 1.05 | | | | | | | | | | |
| | **4-WIRE 56 KBPS DIGITAL LOOP FOR USE IN A COMBINATION** | | | | | | | | | | | | | | | | |
| | | 4-Wire 56Kbps Digital Grade Loop in Combination - Zone 1 | | 1 | UNCDX | UDL56 | 35.76 | | | | | | | | | | |
| | | 4-Wire 56Kbps Digital Grade Loop in Combination - Zone 2 | | 2 | UNCDX | UDL56 | 46.70 | | | | | | | | | | |
| | | 4-Wire 56Kbps Digital Grade Loop in Combination - Zone 3 | | 3 | UNCDX | UDL56 | 61.08 | | | | | | | | | | |
| | | OCU-DP COCI (data) per month (2.4-64kbs) | | | UNCDX | 1D1DD | 1.05 | | | | | | | | | | |
| | **4-WIRE 64 KBPS DIGITAL LOOP FOR USE IN A COMBINATI\ON** | | | | | | | | | | | | | | | | |
| | | 4-Wire 64Kbps Digital Grade Loop in Combination - Zone 1 | | 1 | UNCDX | UDL64 | 35.76 | | | | | | | | | | |
| | | 4-Wire 64Kbps Digital Grade Loop in Combination - Zone 2 | | 2 | UNCDX | UDL64 | 46.70 | | | | | | | | | | |
| | | 4-Wire 64Kbps Digital Grade Loop in Combination - Zone 3 | | 3 | UNCDX | UDL64 | 61.08 | | | | | | | | | | |
| | | OCU-DP COCI (data) - in combination - per month (2.4-64kbs) | | | UNCDX | 1D1DD | 1.05 | | | | | | | | | | |
| | **2-WIRE ISDN LOOP FOR USE IN COMBINATION** | | | | | | | | | | | | | | | | |
| | | 2-Wire ISDN Loop in Combination - Zone 1 | | 1 | UNCNX | U1L2X | 25.55 | | | | | | | | | | |
| | | 2-Wire ISDN Loop in Combination - Zone 2 | | 2 | UNCNX | U1L2X | 33.37 | | | | | | | | | | |
| | | 2-Wire ISDN Loop in Combination - Zone 3 | | 3 | UNCNX | U1L2X | 43.64 | | | | | | | | | | |
| | | 2-wire ISDN COCI (BRITE) - in combination - per month | | | UNCNX | UC1CA | 3.73 | | | | | | | | | | |
| | **4-WIRE DS1 DIGITAL LOOP FOR USE IN A COMBINATION** | | | | | | | | | | | | | | | | |
| | | 4-Wire DS1 Digital Loop in Combination - Zone 1 | | 1 | UNC1X | USLXX | 66.39 | | | | | | | | | | |
| | | 4-Wire DS1 Digital Loop in Combination - Zone 2 | | 2 | UNC1X | USLXX | 86.71 | | | | | | | | | | |
| | | 4-Wire DS1 Digital Loop in Combination - Zone 3 | | 3 | UNC1X | USLXX | 113.38 | | | | | | | | | | |
| | | DS1 COCI in combination per month | | | UNC1X | UC1D1 | 20.22 | | | | | | | | | | |
| | **2 WIRE VOICE GRADE INTEROFFICE TRANSPORT FOR USE IN A COMBINATION** | | | | | | | | | | | | | | | | |
| | | Interoffice Transport - 2-wire VG - Dedicated- Per Mile Per Month | | | UNCVX | 1L5XX | 0.02 | | | | | | | | | | |
| | | Interoffice Transport - 2-wire VG - Dedicated - Facility Termination per month | | | UNCVX | U1TV2 | 25.06 | | | | | | | | | | |
| | **4 WIRE VOICE GRADE INTEROFFICE TRANSPORT FOR USE IN A COMBINATION** | | | | | | | | | | | | | | | | |
| | | Interoffice Transport - 4-wire VG - Dedicated - Per Mile Per Month | | | UNCVX | 1L5XX | 0.02 | | | | | | | | | | |
| | | Interoffice Transport - 4-wire VG - Dedicated - Facility Termination per month | | | UNCVX | U1TV4 | 31.40 | | | | | | | | | | |

| CATEGORY | RATE ELEMENTS | Interim | Zone | BCS | USOC | RATES ($) | | | | | Svc Order Submitted Elec per LSR | Svc Order Submitted Manually per LSR | Incremental Charge - Manual Svc Order vs. Electronic-1st | Incremental Charge - Manual Svc Order vs. Electronic-Add'l | Incremental Charge - Manual Svc Order vs. Electronic-Disc 1st | Incremental Charge - Manual Svc Order vs. Electronic-Disc Add'l |
|---|---|---|---|---|---|---|---|---|---|---|---|---|---|---|---|---|
| | | | | | | Rec | Nonrecurring | | Nonrecurring Disconnect | | OSS Rates ($) | | | | | |
| | | | | | | | First | Add'l | First | Add'l | SOMEC | SOMAN | SOMAN | SOMAN | SOMAN | SOMAN |
| **DS1 INTEROFFICE TRANSPORT FOR COMBINATION** | | | | | | | | | | | | | | | | |
| | Interoffice Transport - Dedicated - DS1 combination - Per Mile per month | | | UNC1X | 1L5XX | 0.41 | | | | | | | | | | |
| | Interoffice Transport - Dedicated - DS1 combination - Facility Termination per month | | | UNC1X | U1TF1 | 89.54 | | | | | | | | | | |
| | 1/0 Channelization System in combination Per Month | | | UNC1X | MQ1 | 92.89 | | | | | | | | | | |
| **DS3 INTEROFFICE TRANSPORT FOR USE IN A COMBINATION** | | | | | | | | | | | | | | | | |
| | Interoffice Transport - Dedicated - DS3 combination - Per Mile Per Month | | | UNC3X | 1L5XX | 2.69 | | | | | | | | | | |
| | Interoffice Transport - Dedicated - DS3 - Facility Termination per month | | | UNC3X | U1TF3 | 983.22 | | | | | | | | | | |
| **STS-1 INTEROFFICE TRANSPORT FOR USE IN COMBINATION** | | | | | | | | | | | | | | | | |
| | Interoffice Transport - Dedicated - STS-1 combination - Per Mile Per Month | | | UNCSX | 1L5XX | 2.69 | | | | | | | | | | |
| | 3/1 Channel System in combination per month | | | UNCSX | MQ3 | 256.43 | | | | | | | | | | |
| **4-WIRE 56 KBPS DIGITAL LOOP WITH 56 KBPS INTEROFFICE TRANSPORT** | | | | | | | | | | | | | | | | |
| | 4-wire 56 kbps Local Loop in combination - Zone 1 | | 1 | UNCDX | UDL56 | 35.76 | | | | | | | | | | |
| | 4-wire 56 kbps Local Loop in combination - Zone 2 | | 2 | UNCDX | UDL56 | 46.70 | | | | | | | | | | |
| | 4-wire 56 kbps Local Loop in combination - Zone 3 | | 3 | UNCDX | UDL56 | 61.08 | | | | | | | | | | |
| | Interoffice Transport - Dedicated - 4-wire 56 kbps combination - Per Mile per month | | | UNCDX | 1L5XX | 0.02 | | | | | | | | | | |
| | Interoffice Transport - Dedicated - 4-wire 56 kbps combination - Facility Termination per month | | | UNCDX | U1TD5 | 24.37 | | | | | | | | | | |
| **4-WIRE 64 KBPS DIGITAL EXTENDED LOOP WITH 64 KBPS INTEROFFICE TRANSPORT** | | | | | | | | | | | | | | | | |
| | 4-wire 64 kbps Lcoal Loop in Combination - Zone 1 | | 1 | UNCDX | UDL64 | 35.76 | | | | | | | | | | |
| | 4-wire 64 kbps Lcoal Loop in Combination - Zone 2 | | 2 | UNCDX | UDL64 | 46.70 | | | | | | | | | | |
| | 4-wire 64 kbps Lcoal Loop in Combination - Zone 3 | | 3 | UNCDX | UDL64 | 61.08 | | | | | | | | | | |
| | Interoffice Transport - Dedicated - 4-wire 64 kbps combination - Per Mile per month | | | UNCDX | 1L5XX | 0.02 | | | | | | | | | | |
| | Interoffice Transport - Dedicated - 4-wire 64 kbps combination - Facility Termination per month | | | UNCDX | U1TD6 | 24.37 | | | | | | | | | | |
| **4-WIRE 56 KBPS DIGITAL EXTENDED LOOP WITH DS0 INTEROFFICE TRANSPORT** | | | | | | | | | | | | | | | | |
| | 4-wire 56 kbps Local Loop in combination - Zone 1 | | 1 | UNCDX | UDL56 | 35.76 | | | | | | | | | | |
| | 4-wire 56 kbps Local Loop in combination - Zone 2 | | 2 | UNCDX | UDL56 | 46.70 | | | | | | | | | | |
| | 4-wire 56 kbps Local Loop in combination - Zone 3 | | 3 | UNCDX | UDL56 | 61.08 | | | | | | | | | | |
| | 4-wiree 56 kbps Interoffice Transport - Dedicated - Per Mile per month | | | UNCDX | 1L5XX | 0.02 | | | | | | | | | | |
| | 4-wire 56 kbps Interoffice Transport - Dedicated - Facility Termination per month | | | UNCDX | U1TD5 | 24.37 | | | | | | | | | | |
| **4-WIRE 64 KBPS DIGITAL EXTENDED LOOP WITH DS0 INTEROFFICE TRANSPORT** | | | | | | | | | | | | | | | | |
| | 4-wire 64 kbps Local Loop in combination - Zone 1 | | 1 | UNCDX | UDL64 | 35.76 | | | | | | | | | | |
| | 4-wire 64 kbps Local Loop in combination - Zone 2 | | 2 | UNCDX | UDL64 | 46.70 | | | | | | | | | | |
| | 4-wire 64 kbps Local Loop in combination - Zone 3 | | 3 | UNCDX | UDL64 | 61.08 | | | | | | | | | | |
| | l4-wire 65 kbps Interoffice Transport - Dedicated - Per Mile per month | | | UNCDX | 1L5XX | 0.02 | | | | | | | | | | |
| | 4-wire 64 kbps Interoffice Transport - Dedicated - Facility Termination per month | | | UNCDX | U1TD6 | 24.37 | | | | | | | | | | |
| **DS1 DIGITAL LOOP AND DS1 INTERFOFFICE TRANSPORT** | | | | | | | | | | | | | | | | |
| | 4-Wire DS1 Digital Loop in Combination - Zone 1 | | 1 | UNC1X | USLXX | 66.39 | | | | | | | | | | |
| | 4-Wire DS1 Digital Loop in Combination - Zone 2 | | 2 | UNC1X | USLXX | 86.71 | | | | | | | | | | |
| | 4-Wire DS1 Digital Loop in Combination - Zone 3 | | 3 | UNC1X | USLXX | 113.38 | | | | | | | | | | |
| | Interoffice Transport - Dedicated - DS1 combination - Per Mile per month | | | UNC1X | 1L5XX | 0.41 | | | | | | | | | | |
| | Interoffice Transport - Dedicated - DS1 combination - Facility Termination per month | | | UNC1X | U1TF1 | 89.54 | | | | | | | | | | |
| **DS3 DIGITAL LOOP WITH DEDICATED DS3 INTEROFFICE TRANSPORT** | | | | | | | | | | | | | | | | |
| | DS3 Local Loop in combination - per mile per month | | | UNC3X | 1L5ND | 10.57 | | | | | | | | | | |
| | DS3 Local Loop in combination - Facility Termination per month | | | UNC3X | UE3PX | 429.49 | | | | | | | | | | |

| UNBUNDLED NETWORK ELEMENTS - Tennessee | | | | | | | | | | | | | | Attachment: 2 Exh. B | | | |
|---|---|---|---|---|---|---|---|---|---|---|---|---|---|---|---|---|---|
| CATEGORY | | RATE ELEMENTS | Interim | Zone | BCS | USOC | RATES ($) | | | | | Svc Order Submitted Elec per LSR | Svc Order Submitted Manually per LSR | Incremental Charge - Manual Svc Order vs. Electronic-1st | Incremental Charge - Manual Svc Order vs. Electronic-Add'l | Incremental Charge - Manual Svc Order vs. Electronic-Disc 1st | Incremental Charge - Manual Svc Order vs. Electronic-Disc Add'l |
| | | | | | | | Rec | Nonrecurring | | Nonrecurring Disconnect | | OSS Rates ($) | | | | | |
| | | | | | | | | First | Add'l | First | Add'l | SOMEC | SOMAN | SOMAN | SOMAN | SOMAN | SOMAN |
| | | Interoffice Transport - Dedicated - DS3 - Per Mile per month | | | UNC3X | 1L5XX | 2.69 | | | | | | | | | | |
| | | Interoffice Transport - Dedicated - DS3 combination - Facility Termination per month | | | UNC3X | U1TF3 | 983.22 | | | | | | | | | | |
| | **STS-1 DIGITAL LOOP WITH DEDICATED STS-1 INTEROFFICE TRANSPORT** | | | | | | | | | | | | | | | | |
| | | STS-1 Local Lolp in combination - per mile per month | | | UNCSX | 1L5ND | 10.57 | | | | | | | | | | |
| | | STS-1 Local Loop in combination - Facility Termination per month | | | UNCSX | UDLS1 | 453.74 | | | | | | | | | | |
| | | Interoffice Transport - Dedicated - STS-1 combination - per mile per month | | | UNCSX | 1L5XX | 2.69 | | | | | | | | | | |
| | | Interoffice Transport - Dedicated - STS-1 combination - Facility Termination per month | | | UNCSX | U1TFS | 976.70 | | | | | | | | | | |
| **ADDITIONAL NETWORK ELEMENTS** | | | | | | | | | | | | | | | | | |
| | **When used as a part of a currently combined facility, the non-recurrng charges do not apply, but a Switch As Is charge does apply.** | | | | | | | | | | | | | | | | |
| | **When used as ordinarily combined network elements in All States, the non-recurring charges apply and the Switch As Is Charge does not.** | | | | | | | | | | | | | | | | |
| | **Nonrecurring Currently Combined Network Elements "Switch As Is" Charge (One applies to each combination)** | | | | | | | | | | | | | | | | |
| | **Optional Features & Functions:** | | | | | | | | | | | | | | | | |
| | | Clear Channel Capability Extended Frame Option - per DS1 | I | | U1TD1, ULDD1,UNC1X | CCOEF | | 0.00 | 0.00 | 0.00 | 0.00 | | | | | | |
| | | Clear Channel Capability Super FrameOption - per DS1 | i | | U1TD1, ULDD1,UNC1X | CCOSF | | 0.00 | 0.00 | 0.00 | 0.00 | | | | | | |
| | | Clear Channel Capability (SF/ESF) Option - Subsequent Activity - per DS1 | I | | ULDD1, U1TD1, UNC1X, USL | NRCCC | | 185.16 | 23.85 | 2.03 | 0.79 | | | | | | |
| | | C-bit Parity Option - Subsequent Activity - per DS3 | i | | U1TD3, ULDD3, UE3, UNC3X | NRCC3 | | 219.46 | 7.68 | 0.7637 | 0.00 | | | | | | |
| | **MULTIPLEXERS** | | | | | | | | | | | | | | | | |
| | | DS1 to DS0 Channel System per month | | | UNC1X | MQ1 | 92.89 | | | | | | | | | | |
| | | OCU-DP COCI (data) - DS1 to DS0 Channel System - per month (2.4-64kbs) used for a Local Loop | | | UDL | 1D1DD | 2.09 | | | | | | | | | | |
| | | OCU-DP COCI (data) - DS1 to DS0 Channel System - per month (2.4-64kbs) used for connection to a channelized DS1 Local Channel in the same SWC as collocation | | | U1TUD | 1D1DD | 2.09 | | | | | | | | | | |
| | | 2-wire ISDN COCI (BRITE) - DS1 to DS0 Channel Systsem - per month for a Local Loop | | | UDN | UC1CA | 3.56 | | | | | | | | | | |
| | | 2-wire ISDN COCI (BRITE) - DS1 to DS0 Channel Systsem - per month used for connection to a channelized DS1 Local Channel in the same SWC as collocation | | | U1TUB | UC1CA | 3.56 | | | | | | | | | | |
| | | Voice Grade COCI - DS1 to DS0 Channel System - per month used for a Local Loop | | | UEA | 1D1VG | 1.05 | | | | | | | | | | |
| | | Voice Grade COCI - DS1 to DS0 Channel System - per month used for connection to a channelized DS1 Local Channel in the same SWC as collocation | | | U1TUC | 1D1VG | 1.05 | | | | | | | | | | |
| | | DS3 to DS1 Channel System per month | | | UNC3X | MQ3 | 256.43 | | | | | | | | | | |
| | | STS-1 to DS1 Channel System per month | | | UNCSX | MQ3 | 256.43 | | | | | | | | | | |
| | | DS1 COCI used with Loop per month | | | USL | UC1D1 | 20.22 | | | | | | | | | | |
| | | DS1 COCI (used for connection to a channelized DS1 Local Channel in the same SWC as collocation) per month | | | U1TUA | UC1D1 | 20.22 | | | | | | | | | | |
| | | DS1 COCI used with Interoffice Channel per month | | | U1TD1 | UC1D1 | 20.22 | | | | | | | | | | |
| | | DS3 Interface Unit (DS1 COCI) used with Local Channel per month | | | ULDD1 | UC1D1 | 20.22 | | | | | | | | | | |

# ATTACHMENT 3

# NETWORK INTERCONNECTION

# TABLE OF CONTENTS

**1. GENERAL** ..... **3**

**2. DEFINITIONS: (FOR THE PURPOSE OF THIS ATTACHMENT)** ..... ERROR! BOOKMARK NOT DEFINED.

**3. NETWORK INTERCONNECTION** ..... **3**

**4. INTERCONNECTION TRUNK GROUP ARCHITECTURES** ..... **5**

**5. NETWORK DESIGN AND MANAGEMENT FOR INTERCONNECTION** ..... **12**

**6. LOCAL DIALING PARITY** ..... **16**

**7. INTERCONNECTION COMPENSATION** ..... **16**

**8. OPERATIONAL SUPPORT SYSTEMS (OSS)** ..... **21**

| | |
|---|---|
| **Rates** | **Exhibit A** |
| **Basic Architecture** | **Exhibit B** |
| **One Way Architecture** | **Exhibit C** |
| **Two Way Architecture** | **Exhibit D** |
| **Supergroup Architecture** | **Exhibit E** |
| **Definitions** | **Exhibit F** |

# NETWORK INTERCONNECTION

**1. GENERAL**

1.1 The Parties shall provide interconnection with each other's networks for the transmission and routing of telephone exchange service (Local Traffic), ISP-bound Traffic, and exchange access (Switched Access Traffic) on the following terms:

**2. ATTACHMENT 3 DEFINITIONS ARE LOCATED IN EXHIBIT F TO THIS ATTACHMENT**

**3. NETWORK INTERCONNECTION**

3.1 This Attachment pertains only to the provision of network interconnection where Comcast Phone owns, leases from a third party or otherwise provides its own switch(es) its switch(s).

3.2 Network interconnection shall be provided by the Parties at any technically feasible point within BellSouth's network. Requests to BellSouth for interconnection at points other than as set forth in this Attachment may be made through the Bona Fide Request/New Business Request process set out in this Agreement.

3.2.1 Each Party is responsible for providing, engineering and maintaining the network on its side of the IP. The IP must be located within BellSouth's serving territory in the LATA in which traffic is originating. The IP determines the point at which the originating Party shall pay the terminating Party for the Call Transport and Termination of Local Traffic and ISP-bound Traffic.

3.2.2 Pursuant to the provisions of this Attachment, the location of the IP(s) in a given LATA shall be established by mutual agreement of the Parties. Subject to the requirements for installing additional IPs, as set forth below, any IPs existing prior to the Effective Date of the Agreement will be accepted as initial IPs and will not require re-grooming. When the Parties mutually agree to utilize two-way interconnection trunk groups for the exchange of Local Traffic and ISP-bound Traffic between each other, the Parties shall mutually agree to the location of IP(s). If the Parties are unable to agree to a mutual initial IP, each Party, as originating Party, shall establish a single IP in the LATA for the delivery of its originated Local Traffic and ISP-bound Traffic to the other Party for Call Transport and Termination by the terminating Party. Construction of facilities shall be in accordance with applicable law.

3.2.3 When establishing interconnection arrangements in each LATA, the location of the IP(s) shall be established by mutual agreement of the Parties. In selecting the IP, both Parties will act in good faith in selecting a point that complies with applicable law. If the Parties are unable to agree on the location of the IP, each Party will designate IPs for its originated traffic. Additional IP(s) in a LATA may be established by mutual agreement of the Parties. Notwithstanding the foregoing, additional IP(s) in a particular LATA shall be established, at the

request of either Party, when the Local Traffic and ISP-bound Traffic exceeds 8.9 million minutes per month (i.e., DS3) for three consecutive months at the proposed location of the additional IP. BellSouth will not request the establishment of an IP where physical or virtual collocation space is not available or where BellSouth fiber connectivity is not available. When the Parties agree to utilize two-way interconnection trunk groups for the exchange of Local Traffic, the location of the IP(s) shall be at the mutual agreement of the Parties.

3.2.4 With the exception of the Billing Point of Interface, Multiplexing compensation and Transit Traffic compensation, the Parties shall institute a "bill and keep" compensation plan under which neither Party will charge the other Party recurring or nonrecurring charges for trunks (one-way or two-way) and associated dedicated facilities for the exchange of Local Traffic (non-transit) or ISP-bound Traffic. Each Party has the obligation to install the appropriate trunks and associated facilities on its respective side of the Interconnection Point and is responsible for bearing its own costs on its side of the Point of Interface. Both Parties, as appropriate, shall be compensated for the ordering of trunks and facilities used exclusively for Transit Traffic and for ancillary traffic types including, but not limited to, 911 and OS/DA. The Parties agree that charges for such trunks and facilities are as set for in Exhibit A to this Attachment or the applicable tariff. In the event that a Party chooses to lease facilities from the other Party in lieu of installing facilities on its side of the Interconnection Point as required by this agreement, such facilities are not subject to "bill and keep", but shall be purchased in accordance with 3.3.1 and 3.3.2 below.

3.3 **Interconnection via Dedicated Facilities**

3.3.1 **Local Channel Facilities.** In lieu of providing facilities on its side of the Interconnection Point, the originating Party may obtain Local Channel facilities from the terminating Party. The percentage of Local Channel facilities utilized for Local Traffic shall be determined based upon the application of the Percent Local Facility ("PLF") Factor, as defined below in Section 7.3.2, on a statewide basis. The charges applied to the percentage of Local Channel facilities used for Local Traffic as determined by the PLF are as set forth in Exhibit A to this Attachment. The remaining percentage of Local Channel facilities shall be billed at BellSouth's applicable access tariff rates.

3.3.2 **Dedicated Interoffice Facilities.** In lieu of providing facilities on its side of the Interconnection Point, the originating Party may obtain Dedicated Interoffice Facilities from the terminating Party. The percentage of Dedicated Interoffice Facilities utilized for Local Traffic shall be determined based upon the application of the Percent Local Facility (PLF) Factor as defined below in Section 7.3.2, on a statewide basis. The charges applied to the percentage of the Dedicated Interoffice Facilities used for Local Traffic as determined by the PLF are as set forth in Exhibit A to this Attachment. The remaining percentage of the Dedicated Interoffice Facilities shall be billed at BellSouth's applicable access tariff rates. .

3.3.3 The facilities purchased pursuant to this Section 3 shall be ordered via the Access Service Request ("ASR") process.

3.3.4 For the purpose of this Attachment 3, Local Channel is defined as a switch transport facility between a Party's Point of Presence and its designated serving wire center.

3.3.5 For the purpose of this Attachment 3, Serving Wire Center is defined as the wire center owned or leased by one Party from which the other Party would normally obtain dial tone for its Point of Presence.

3.3.6 For the purpose of this Attachment 3, Dedicated Interoffice Facility is defined as a switch transport facility between a Party's designated serving wire center and the first point of switching on the other Party's common (shared) network.

3.4 **Fiber Meet**

3.4.1 If Comcast Phone elects to interconnect with BellSouth pursuant to a Fiber Meet, Comcast Phone and BellSouth shall jointly engineer, operate and maintain a Synchronous Optical Network ("SONET") transmission system by which they shall interconnect their transmission and routing of Local Traffic via a Local Channel at either the DS1 or DS3 level. The Parties shall work together to determine the specific SONET transmission system. However, Comcast Phone's SONET transmission system must be compatible with BellSouth's equipment in the Serving Wire Center. The Data Communications Channel (DCC) must be turned off. Each Party reserves the right to determine the equipment it employs for service.

3.4.2 Each Party, at its own expense, shall procure, install and maintain the agreed upon SONET transmission system in its network.

3.4.3 The Parties shall agree to a Fiber Meet point between the BellSouth Serving Wire Center and the Comcast Phone Serving Wire Center. The Parties shall deliver their fiber optic facilities to the Fiber Meet point with sufficient spare length to reach the fusion splice point for the Fiber Meet Point. BellSouth shall, at its own expense, provide and maintain the fusion splice point for the Fiber Meet. A building type Common Language Location Identification ("CLLI") code will be established for each Fiber Meet point. All orders for interconnection facilities from the Fiber Meet point shall indicate the Fiber Meet point as the originating point for the facility.

3.4.4 Upon verbal notification by Comcast Phone, BellSouth shall allow Comcast Phone access to the fusion splice point for the Fiber Meet point for maintenance purposes on Comcast Phone's side of the Fiber Meet point.

3.4.5 Neither Party shall charge the other for its Local Channel portion of the Fiber Meet facility used exclusively for Local Traffic. All other appropriate charges will apply. Comcast Phone shall be billed for a mixed use of the Local Channel as set forth in the appropriate tariff(s) using the PIU/PLF factors supplied by Comcast Phone. Charges for switched and special access services shall be billed in accordance with the applicable access service tariff.

## 4. INTERCONNECTION TRUNK GROUP ARCHITECTURES

4.1 BellSouth and Comcast Phone shall establish interconnecting trunk groups and trunk group configurations between networks, including the use of one-way or two-way trunks in accordance with the following provisions set forth in this Agreement**.** For trunking purposes, traffic will be routed based on the digits dialed by the originating end user and in accordance with the LERG.

4.2 Comcast Phone shall establish an interconnection trunk group(s) to at least one BellSouth access tandem within the LATA for the delivery of Comcast Phone's originated Local Traffic and for the receipt and delivery of Transit Traffic. To the extent Comcast Phone desires to deliver Local Traffic and/or Transit Traffic to BellSouth access tandems within the LATA, other than the tandems(s) to which Comcast Phone has established interconnection trunk groups, Comcast Phone shall order Multiple Tandem Access, as described in this Attachment, to such other BellSouth access tandems.

4.2.1 Notwithstanding the forgoing, Comcast Phone shall establish an interconnection trunk group(s) to all BellSouth access and local tandems in the LATA where Comcast Phone has homed (i.e. assigned) its NPA/NXXs. Comcast Phone shall home its NPA/NXXs on the BellSouth tandems that serve the exchange rate center areas to which the NPA/NXXs are assigned. The specified exchange rate center assigned to each BellSouth tandem is defined in the LERG. Comcast Phone shall enter its NPA/NXX access and/or local tandem homing arrangements into the LERG.

4.3 Switched access traffic will be delivered to and from Interexchange Carriers (IXCs) based on Comcast Phone's NXX access tandem homing arrangement as specified by Comcast Phone in the LERG.

4.4 Any Comcast Phone interconnection request that (1) deviates from the interconnection trunk group architectures as described in this Agreement, (2) affects traffic delivered to Comcast Phone from a BellSouth switch, and (3) requires special BellSouth switch translations and other network modifications will require Comcast Phone to submit a Bona Fide Request (BFR) via the BFR Process as set forth in this Agreement.

4.5 Recurring and non-recurring rates associated with interconnecting trunk groups between BellSouth and Comcast Phone are set forth in Exhibit A. To the extent a rate for a service purchased by Comcast Phone and associated with the interconnecting trunk group is not set forth in Exhibit A, the rates shall be as set forth in the appropriate BellSouth interstate and intrastate tariffs for switched access services. To the extent a rate for a service requested by BellSouth or Comcast Phone, and associated with the interconnecting trunk group is not set forth in Exhibit A, the Parties shall amend the Agreement to include rates, terms, and conditions for such service.

4.6 Comcast Phone shall be responsible for ordering any two-way trunks carrying Transit Traffic.

4.7 All trunk groups will be provisioned as Signaling System 7 (SS7) capable where technically feasible. If SS7 is not technically feasible multi-frequency (MF) protocol signaling shall be used.

4.8 In cases where Comcast Phone is also an IXC, the IXC's Feature Group D (FG D) trunk group(s) must remain separate from the local interconnection trunk group(s).

4.9 Each Party shall order interconnection trunks and trunk group including trunk and trunk group augmentations via the ASR process. A Firm Order Confirmation (FOC) shall be returned to the ordering Party, after receipt of a valid, error free ASR, within the timeframes set forth in each state's applicable Performance Measures. The ordering party shall be timely notified in the event that an ASR is deemed to be invalid. In addition, the receiving Party will issue a Design Layout Record ("DLR"), if appropriate, to the ordering Party within the same timeframe as the FOC is returned if the Party has a mechanized receipt process. If the FOC and/or the DLR are not received within each state's applicable timeframe, then both Parties agree to escalate within the respective network and operations organizations as appropriate. Notwithstanding the foregoing, blocking situations and projects shall be managed through BellSouth's Local Interconnection Switching Center (LISC) Project Management Group and Comcast Phone's equivalent trunking group, and FOCs for such orders shall be returned in the timeframes applicable to the project. A project is defined as (1) a new trunk group or (2) a request for more than 192 trunks on a single or multiple group(s) in a given BellSouth local calling area, or (3) new switch deployments for switches deployed by either Party. The Parties agree to jointly plan and coordinate new projects.

4.10 **Interconnection Trunk Groups for Exchange of Local Traffic and Transit Traffic**

Upon mutual agreement of the Parties in a joint planning meeting, the Parties' shall exchange Local Traffic on two-way interconnection trunk group(s) with the quantity of trunks being mutually determined and the provisioning being jointly coordinated. Furthermore, the Parties shall agree upon the IP(s) for two-way interconnection trunk groups transporting both Parties' Local Traffic. Comcast Phone shall order such two-way trunks via the Access Service Request (ASR) process. BellSouth will use the Trunk Group Service Request (TGSR) to request changes in trunking. Furthermore, semi-annually the Parties shall jointly review trunk performance and BellSouth shall assist in the development of Comcast Phone's trunking forecast.. The Parties' use of two-way interconnection trunk groups for the transport of Local Traffic between the Parties does not preclude either Party from establishing additional one-way interconnection trunks for the delivery of its originated Local Traffic to the other Party.

4.10.1 **BellSouth Access Tandem Interconnection**

BellSouth access tandem interconnection at a single access tandem provides access to those end offices subtending that access tandem ("Intratandem Access").

Access tandem interconnection is available for any of the following access tandem architectures.

4.10.1.1 **Basic Architecture**

In the basic architecture, Comcast Phone's originating Local Traffic and originating and terminating Transit Traffic is transported on a single two-way trunk group between Comcast Phone and BellSouth access tandem(s) within a LATA to provide Intratandem Access. This trunk group carries Transit Traffic between Comcast Phone and Independent Companies, Interexchange Carriers, other CLECs, CMRS providers that have a Meet Point Billing arrangement with BellSouth, and other network providers with which Comcast Phone desires to exchange traffic. This trunk group also carries Comcast Phone originated Transit Traffic transiting a single BellSouth access tandem destined to third party tandems such as an Independent Company tandem or other CLEC tandem. For billing identification purposes, the Parties agree to hand off Calling Party Number (CPN) where technically feasible. BellSouth originated Local Traffic is transported on a separate single one-way trunk group terminating to Comcast Phone. Other trunk groups for operator services, directory assistance, emergency services and intercept must be established pursuant to the applicable BellSouth tariff if service is requested. The LERG contains current routing and tandem serving arrangements. The basic Architecture is illustrated in Exhibit B.

4.10.1.2 **One-Way Trunk Group Architecture**

In one-way trunk group architecture, the Parties interconnect using three separate trunk groups. A one-way trunk group provides Intratandem Access for Comcast Phone-originated Local Traffic destined for BellSouth end-users. A second one-way trunk group carries BellSouth-originated Local Traffic destined for Comcast Phone end-users.

4.10.1.2.1 A two-way trunk group provides Intratandem Access for Comcast Phone's originating and terminating Transit Traffic. This trunk group carries Transit Traffic between Comcast Phone and Independent Companies, Interexchange Carriers, other CLECs, CMRS providers that have a Meet Point Billing arrangement with BellSouth, and other network providers with which Comcast Phone desires to exchange traffic. This trunk group also carries Comcast Phone originated Transit Traffic transiting a single BellSouth access tandem destined to third party tandems such as an Independent Company tandem or other CLEC tandem.

4.10.1.2.2 Other trunk groups for operator services, directory assistance, emergency services and intercept must be established pursuant to the applicable BellSouth tariff if service is requested. The LERG contains current routing and tandem serving arrangements. The one-way trunk group architecture is illustrated in Exhibit C.

4.10.1.3 **Two-Way Trunk Group Architecture**

The two-way trunk group Architecture establishes one two-way trunk group to provide Intratandem Access for the exchange of Local Traffic between Comcast

Phone and BellSouth. In addition, a separate two-way transit trunk group must be established for Comcast Phone's originating and terminating Transit Traffic. This trunk group carries Transit Traffic between Comcast Phone and Independent Companies, Interexchange Carriers, other CLECs, CMRS providers that have a Meet Point Billing arrangement with BellSouth, and other network providers with which Comcast Phone desires to exchange traffic. This trunk group also carries Comcast Phone originated Transit Traffic transiting a single BellSouth access tandem destined to third party tandems such as an Independent Company tandem or other CLEC tandem. Upon prior notification, BellSouth originated traffic may, in order to prevent or remedy traffic blocking situations, be transported on a separate single one-way trunk group terminating to Comcast Phone. Other trunk groups for operator services, directory assistance, emergency services and intercept must be established pursuant to the applicable BellSouth tariff if service is requested. The LERG contains current routing and tandem serving arrangements. The two-way trunk group architecture is illustrated in Exhibit D.

4.10.1.4 **Supergroup Architecture**

The Parties may establish a supergroup architecture. In the supergroup architecture, the Parties' Local Traffic and Comcast Phone's Transit Traffic are exchanged on a single two-way trunk group between Comcast Phone and BellSouth to provide Intratandem Access to Comcast Phone. This trunk group carries Transit Traffic between Comcast Phone and Independent Companies, Interexchange Carriers, other CLECs, CMRS providers that have a Meet Point Billing arrangement with BellSouth, and other network providers with which Comcast Phone desires to exchange traffic. This trunk group also carries Comcast Phone originated Transit Traffic transiting a single BellSouth access tandem destined to third party tandems such as an Independent Company tandem or other CLEC tandem. Upon prior notification, BellSouth originated traffic may, in order to prevent or remedy traffic blocking situations, be transported on a separate single one-way trunk group terminating to Comcast Phone. Other trunk groups for operator services, directory assistance, emergency services and intercept must be established pursuant to the applicable BellSouth tariff if service is requested. The LERG contains current routing and tandem serving arrangements. The supergroup architecture is illustrated in Exhibit E.

4.10.1.5 Multiple Tandem Access Interconnection

4.10.1.5.1 Where Comcast Phone does not choose access tandem interconnection at every BellSouth access tandem within a LATA, Comcast Phone may utilize BellSouth's multiple tandem access interconnection (MTA). To utilize MTA Comcast Phone must establish an interconnection trunk group(s) at a BellSouth access tandem through multiple BellSouth access tandems within the LATA as required. BellSouth will route Comcast Phone's originated Local Traffic for LATA wide transport and termination. Comcast Phone must also establish an interconnection trunk group(s) at all BellSouth access tandems where Comcast Phone NXXs are homed as described in Section 4.2.1 above. If Comcast Phone does not have

NXXs homed at any particular BellSouth access tandem within a LATA and elects not to establish an interconnection trunk group(s) at such BellSouth access tandem, Comcast Phone can order MTA in each BellSouth access tandem within the LATA where it does have an interconnection trunk group(s) and BellSouth will terminate Comcast Phone's Local Traffic to end-users served through those BellSouth access tandems where Comcast Phone does not have an interconnection trunk group(s).

4.10.1.5.2 Comcast Phone may also utilize MTA to route its originated Transit Traffic; provided, however, that MTA may not be utilized to route switched access traffic that transits the BellSouth network to an Interexchange Carrier (IXC). Switched access traffic originated by or terminated to Comcast Phone will be delivered to and from IXCs based on Comcast Phone's NXX access tandem homing arrangement as specified by Comcast Phone in the LERG.

4.10.1.5.3 Compensation for MTA shall be at the applicable tandem switching and transport charges specified in Exhibit A to this Attachment and shall be billed in addition to any Call Transport and Termination charges.

4.10.1.5.4 To the extent Comcast Phone does not purchase MTA in a LATA served by multiple access tandems, Comcast Phone must establish an interconnection trunk group(s) to every access tandem in the LATA to serve the entire LATA. To the extent Comcast Phone routes its traffic in such a way that utilizes BellSouth's MTA service without properly ordering MTA, Comcast Phone shall pay BellSouth the associated MTA charges.

4.10.2 **Local Tandem Interconnection**

4.10.2.1 Local Tandem Interconnection arrangement allows Comcast Phone to establish an interconnection trunk group(s) at BellSouth local tandems for: (1) the delivery of Comcast Phone-originated Local Traffic transported and terminated by BellSouth to BellSouth end offices served by those BellSouth local tandems, and (2) for local Transit Traffic transported by BellSouth for third party network providers who have also established an interconnection trunk group(s) at those BellSouth local tandems.

4.10.2.2 When a specified local calling area is served by more than one BellSouth local tandem, Comcast Phone must designate a "home" local tandem for each of its assigned NPA/NXXs and establish trunk connections to such local tandems. Additionally, Comcast Phone may choose to establish an interconnection trunk group(s) at the BellSouth local tandems where it has no NPA/NXX codes homed. Comcast Phone may deliver Local Traffic to a "home" BellSouth local tandem that is destined for other BellSouth or third party network provider end offices subtending other BellSouth local tandems in the same local calling area where Comcast Phone does not choose to establish an interconnection trunk group(s). It is Comcast Phone's responsibility to enter its own NPA/NXX local tandem homing arrangements into the LERG either directly or via a vendor in order for other third party network providers to determine appropriate traffic routing to Comcast Phone's codes. Likewise, each Party Comcast Phone shall obtain its routing information from the LERG.

4.10.2.3 Notwithstanding establishing an interconnection trunk group(s) to BellSouth's local tandems, Comcast Phone must also establish an interconnection trunk group(s) to BellSouth access tandems within the LATA on which Comcast Phone has NPA/NXXs homed for the delivery of Interexchange Carrier Switched Access (SWA) and toll traffic, and traffic to Type 2A CMRS connections located at the access tandems. BellSouth shall not switch SWA traffic through more than one BellSouth access tandem. SWA, Type 2A CMRS or toll traffic routed to the local tandem in error will not be backhauled to the BellSouth access tandem for completion.

4.10.3 **Direct End Office-to-End Office Interconnection**

4.10.3.1 Direct End Office-to-End Office one-way or two-way interconnection trunk groups allow for the delivery of a Party's originating Local Traffic and ISP-bound Traffic to the terminating Party on a direct end office-to-end office basis.

4.10.3.2 The Parties shall utilize direct end office-to-end office trunk groups under any one of the following conditions:

4.10.3.2.1 Tandem Exhaust - If a tandem through which the Parties are interconnected is unable to, or is forecasted to be unable to support additional traffic loads for any period of time, the Parties will mutually agree on an end office trunking plan that will alleviate the tandem capacity shortage and ensure delivery of traffic between Comcast Phone and BellSouth.

4.10.3.2.2 Traffic Volume – The Parties agree to monitor the amount of tandem routed traffic between Comcast Phone's switch and a BellSouth end office and where such traffic exceeds or is forecasted to exceed a single DS1 of traffic per month for three (3) consecutive months, the Parties shall install and retain direct end office trunking sufficient to handle such traffic volumes. Either Party will install additional capacity between such points when overflow traffic exceeds or is forecasted to exceed a single DS1 of traffic per month for three (3) consecutive months. In the case of one-way trunking, additional facilities and trunking shall only be required by the Party whose trunking has achieved the preceding usage threshold.

4.10.3.2.3 Mutual Agreement - The Parties may install direct end office trunking upon mutual agreement in the absence of conditions (1) or (2) above.

4.10.4 **Transit Traffic Trunk Group**

Transit Traffic trunks can either be two-way trunks or two one-way trunks ordered by Comcast Phone to deliver and receive Transit Traffic. Establishing Transit Traffic trunks at BellSouth access and local tandems provides Intratandem Access to the third parties also interconnected at those tandems.

4.10.4.1 **Toll Free Traffic**

4.10.4.1.1 If Comcast Phone chooses BellSouth to perform the Service Switching Point ("SSP") Function (i.e., handle Toll Free database queries) from BellSouth's switches, all Comcast Phone originating Toll Free traffic will be routed over the Transit Traffic Trunk Group and shall be delivered using GR-394 format. Carrier

Code "0110" and Circuit Code (to be determined for each LATA) shall be used for all such calls.

4.10.4.1.2 Comcast Phone may choose to perform its own Toll Free database queries from its switch. In such cases, Comcast Phone will determine the nature (local/intraLATA/interLATA) of the Toll Free call (local/IntraLATA/InterLATA) based on the response from the database. If the call is a BellSouth local or intraLATA Toll Free call, Comcast Phone will route the post-query local or IntraLATA converted ten-digit local number to BellSouth over the local or intraLATA trunk group. If the call is a third party (ICO, IXC, CMRS or other CLEC) local or intraLATA Toll Free call, Comcast Phone will route the post-query local or intraLATA converted ten-digit local number to BellSouth over the Transit Traffic Trunk Group and Comcast Phone shall provide to BellSouth a Toll Free billing record when appropriate. If the query reveals the call is an interLATA Toll Free call, Comcast Phone will route the post-query interLATA Toll Free call (1) directly from its switch for carriers interconnected with its network or (2) over the Transit Traffic Trunk Group to carriers that are not directly connected to Comcast Phone's network but that are connected to BellSouth's access tandem.

4.10.5 All post-query Toll Free calls for which Comcast Phone performs the SSP function, if delivered to BellSouth, shall be delivered using GR-394 format for calls destined to IXCs, and GR-317 format for calls destined to end offices that directly subtend a BellSouth access tandem within the LATA.

## 5. NETWORK DESIGN AND MANAGEMENT FOR INTERCONNECTION

5.1 Network Management and Changes. The Parties will exchange toll-free twenty-four (24) hour maintenance contact numbers and escalation procedures. The Parties will provide public notice of network changes in accordance with applicable federal and state rules and regulations.

5.2 Interconnection Technical Standards. The interconnection of all networks will be based upon accepted industry/national guidelines for transmission standards and traffic blocking criteria. Interconnecting facilities shall conform, at a minimum, to the telecommunications industry standard of DS-1 pursuant to Telcordia Standard No. GR- -00499-CORE. Where Comcast Phone chooses to utilize Signaling System 7 signaling, also known as Common Channel Signaling ("SS7"), SS7 connectivity is required between the Comcast Phone switch and the BellSouth Gateway Signaling Transfer Point ("GSTP"). BellSouth will provide SS7 signaling using Common Channel Signaling Access Capability in accordance with the technical specifications set forth in TR73554, the BellSouth Guidelines to Technical Publication, GR-000905-CORE. Facilities of each Party shall provide the necessary on-hook, off-hook answer and disconnect supervision and shall provide calling number ID (Calling Party Number) when technically feasible.

5.2.1 BellSouth will make available to Comcast Phone, as needed, 64 Kbps Clear Channel Capability ("64K CCC") trunks. Upon receipt of the Comcast Phone's

initial forecast of 64K CCC quantities, the Parties will begin joint planning for the engineering, procurement, and installation of the segregated 64K CCC Local Interconnection Trunk Groups, and the associated Bipolar 8 Zero Substitution (B8ZS) ESF facilities, for the sole purpose of transmitting 64K CCC data calls between Comcast Phone and BellSouth. In no case will these trunks be used for voice calls. Where such trunks and/or additional equipment is required, such equipment and trunks will be obtained, engineered, and installed on the same basis and with the same intervals as any similar growth job for IXC, CLEC, or BellSouth internal customer demand for 64K CCC trunks. Where technically feasible and by mutual agreement, these trunks will be established as two-way.

5.2.2 At Comcast Phone's request BellSouth will engineer all interconnection trunks between BellSouth and Comcast Phone to a 6 dB of digital pad configuration. BellSouth and Comcast Phone will cooperatively work to identify and convert all existing interconnection trunks to a 6 dB of digital pad configuration. Comcast Phone will waive any claims, damages, actions or causes of action that may result or result from the use of a 6 dB of digital pad configuration for interconnection trunks between BellSouth and Comcast Phone. Further, Comcast Phone shall indemnify BellSouth in regards to all claims, damages, action or causes of action brought by any third party that may result or result from the use of a 6dB of digital pad configuration for interconnection trunks between BellSouth and Comcast Phone.

5.3 Quality of Interconnection. The local interconnection for the transmission and routing of telephone exchange service and exchange access that each Party provides to each other will be at least equal in quality to what it provides to itself and any subsidiary or Affiliate, where technically feasible, or to any other Party to which each Party provides local interconnection.

5.3.1 A Designed blocking Objective (DBO) of one half of one percent (.005) during the Average Time Consistent Busy Hour (TCBH) for final trunk groups between a Comcast Phone end office and a BellSouth access tandem carrying traffic subject to meet point billing shall be maintained. All other final trunk groups are to be engineered with a DBO of one- percent (.01) during the Average TCBH.

5.4 Network Management Controls. Both Parties will work cooperatively to apply sound network management principles by invoking appropriate network management controls (e.g., call gapping or other methods) to alleviate or prevent network congestion.

5.5 SS7 Signaling. Both Parties will utilize LEC-to-LEC SS7 Signaling, where available, in conjunction with all traffic in order to enable full interoperability of CLASS features and functions except for call return. All SS7 signaling parameters will be provided, including but not limited to automatic number identification ("ANI"), originating line information ("OLI") calling company category and charge number. All privacy indicators will be honored, and the

Parties will exchange Transactional Capabilities Application Part ("TCAP") messages to facilitate full interoperability of SS7-based features between the respective networks. Neither Party shall alter the SS7 parameters, or be a party to altering such parameters, or knowingly pass SS7 parameters that have been altered in order to circumvent appropriate interconnection charges.

5.6 Signaling Call Information. BellSouth and Comcast Phone will send and receive 10 digits for Local Traffic. Additionally, BellSouth and Comcast Phone will exchange the proper call information, i.e. originated call company number and destination call company number, CIC, and OZZ, including all proper translations for routing between networks and any information necessary for billing.

5.7 **Forecasting for Trunk Provisioning**

5.7.1 The Parties shall work cooperatively to manage the capacity of Local Interconnection Trunk Groups. Either Party may send the other an error-free ASR to initiate changes to the Local Interconnection Trunk Groups that the ordering Party controls based on the ordering Party's capacity assessment. Comcast Phone shall provide revised trunk forecasts for all one-way (1-way) and two-way (2-way) trunk groups every six (6) months. Comcast Phone agrees to provide an initial interconnection trunk group forecast for each new LATA in which it plans to provide service within BellSouth's region. Upon receipt of Comcast Phone's forecast, the Parties shall conduct a joint planning meeting to finalize a joint interconnection trunk group forecast. Each forecast provided under this Section shall be deemed "Confidential Information" under the General Terms and Conditions of this Agreement.

5.7.1.1 At a minimum, the forecast shall include the projected quantity of Transit Trunks, Comcast Phone-to-BellSouth one-way trunks ("Comcast Phone Trunks"), BellSouth-to-Comcast Phone one-way trunks ("Reciprocal Trunks") and/or two-way interconnection trunks, if the Parties have agreed to interconnect using two-way trunking to transport the Parties' Local Traffic and IntraLATA Toll Traffic. The quantities shall be projected for a minimum of six months and shall include an estimate of the current year plus the next two years total forecasted quantities. The Parties shall mutually develop Reciprocal Trunk and/or two-way interconnection trunk forecast quantities.

5.7.1.2 All forecasts shall include, at a minimum, Access Carrier Terminal Location ("ACTL"), trunk group type (local/intraLATA toll, Transit, Operator Services, 911, etc.), A location/Z location (CLLI codes for Comcast Phone location and BellSouth location where the trunks shall terminate), interface type (e.g., DS1), Direction of Signaling, Trunk Group Number, if known, (commonly referred to as the 2-6 code) and forecasted trunks in service each year (cumulative).

5.7.2 The Parties shall use commercially reasonable efforts to make the forecasts as accurate as possible based on reasonable engineering criteria. The Parties shall continue to develop Reciprocal Trunk and/or two-way interconnection trunk forecasts as described in Section 5.7.1.1.

5.7.3 The submitting and development of interconnection trunk forecasts shall not replace the ordering process for local interconnection trunks. Each Party shall exercise its best efforts to provide the quantity of interconnection trunks mutually forecasted. However, the provision of the forecasted quantity of interconnection trunks is subject to trunk terminations and facility capacity existing at the time the trunk order is submitted. Furthermore, the receipt and development of trunk forecasts does not imply any liability for failure to perform if capacity (trunk terminations or facilities) is not available for use at the forecasted time.

5.8 **Trunk Utilization**

5.8.1 BellSouth and Comcast Phone shall monitor traffic on each interconnection trunk group that is installed pursuant to the interconnection trunk requirements and subsequent forecasts. The Parties agree to review on a quarterly basis the capacity utilization during the most recent quarter of the traffic study period. Unless the Parties otherwise agree, if a final trunk group is under eighty percent (80%) of the CCS capacity on a monthly average basis, for each month of any three (3) consecutive month period, either Party may provide written notice to the other requesting to resize the trunk group. Upon agreement of reciprocal trunk quantities required, BellSouth shall issue a reciprocal ASR. When additional capacity is required to reduce measured blocking to objective design levels, an ASR will be issued promptly upon discover of blocking by the appropriate Party. The ASR-sending Party shall note "Blocking" on the ASR. If Comcast Phone is the ASR-sending Party, then Comcast Phone will notify the BellSouth Local Interconnection Service Center Project Manager. If BellSouth is the ASR-sending Party, then BellSouth will notify the designated Comcast Phone representative. In all cases, grade of service objectives shall be maintained. The Party whose trunks are disconnected shall refund to the other Party associated trunk and facility charges paid by such other Party, if any

5.8.1.1 If any reciprocal trunk group is underutilized pursuant to section 5.8.1 above, BellSouth's Local Interconnection Switching Center ("LISC") project manager will notify Comcast Phone regarding the number of trunks that BellSouth wishes to disconnect. BellSouth's project manager will call Comcast Phone's designated interface, and provide the supporting information either by email or facsimile to the designated Comcast Phone interface. Comcast Phone shall provide concurrence with the disconnection in seven (7) business days or will provide specific information supporting additional traffic that it is to bring onto the trunk group. Such supporting information should include expected traffic volumes (including traffic volumes generated due to Local Number Portability) and the timeframes within which Comcast Phone expects to need such trunks. BellSouth's LISC Project Manager and Circuit Capacity Manager will discuss the new information with Comcast Phone to determine if agreement can be reached on the number of trunks to be removed. Both Parties shall make good faith efforts to reach agreement on the number of trunks to be disconnected up to and including escalation to, and resolution by, the appropriate company Vice President and/or Engineering Vice President within 30 days. By so agreeing to this escalation process for excess trunk disconnection, neither Party forfeits its

right to pursue additional dispute resolution pursuant to the General Terms and Conditions of this agreement.

5.8.2 To the extent that any interconnection trunk group is utilized at a time-consistent busy hour of eighty percent (80%) or greater, the Parties shall negotiate in good faith for the installation of augmented facilities.

## 6. LOCAL DIALING PARITY

6.1 BellSouth and Comcast Phone shall provide local and toll dialing parity, as defined in FCC rules and regulations, with no unreasonable dialing delays. Dialing parity shall be provided for all originating telecommunications services that require dialing to route a call.

## 7. INTERCONNECTION COMPENSATION

### 7.1 Compensation for Call Transportation and Termination for Local Traffic and ISP-bound Traffic

7.1.1 For reciprocal compensation between the Parties pursuant to this Attachment and pursuant to the Parties Agreement on Sections 7.3 through 7.3.5 and Sections 3.3 through 3.3.2 of this Attachment, Local Traffic is defined as any circuit switched call that is originated by an end user of one Party and terminated to an end user of the other Party within a given LATA on that other Party's network, except for those calls that are originated or terminated through switched access arrangements as established by the ruling regulatory body.

7.1.1.1 Additionally, Local Traffic includes any cross boundary, voice-to-voice intrastate, interLATA or interstate, interLATA calls established as a local call by the ruling regulatory body.

7.1.2 ISP-bound Traffic is defined as calls to an information service provider or Internet service provider ("ISP") that are dialed by using a local dialing pattern (7 or 10 digits) by a calling party in one LATA to an ISP server or modem in the same LATA. ISP-bound traffic is subject to compensation to the extent provided by the FCC in its *Order on Remand and Report and Order*, CC Docket Nos. 96-98, FCC 01-31 (released April 27, 2001) ("ISP Remand Order").

7.1.3 Notwithstanding the definitions of Local Traffic and ISP-bound traffic above, and pursuant to the FCC's Order on Remand and Report and Order in CC Docket 99-68 released April 27, 2001 ("ISP Order on Remand"), BellSouth and Comcast Phone agree to the rebuttable presumption that all combined circuit switched Local and ISP-bound Traffic delivered to BellSouth or Comcast Phone that exceeds a 3:1 ratio of terminating to originating traffic on a statewide basis shall be considered ISP-bound traffic for compensation purposes. BellSouth and Comcast Phone further agree to the rebuttable presumption that all combined circuit switched Local and ISP-bound Traffic delivered to BellSouth or Comcast Phone that does not exceed a 3:1 ratio of terminating to originating traffic on a statewide basis shall be considered Local Traffic for compensation purposes.

7.1.4 Neither Party shall pay compensation to the other Party for per minute of use rate elements associated with the Call Transport and Termination of Local Traffic or ISP-bound Traffic.

7.1.4.1 The elemental rates set forth in Exhibit A of this Agreement shall apply throughout the term of this Agreement for Multiple Tandem Access, as described in Section 4.10.1.5 above, and Transit Traffic, as described in Section 7.6 below.

7.1.5 Neither Party shall represent Switched Access Traffic as Local Traffic or ISP-bound Traffic for purposes of determining compensation for the call.

7.1.6 If Comcast Phone assigns NPA/NXXs to specific BellSouth rate centers within the LATA and assigns numbers from those NPA/NXXs to Comcast Phone end users physically located outside of that LATA, BellSouth traffic originating from within the LATA where the NPA/NXXs are assigned and delivered to a Comcast Phone customer physically located outside of such LATA, shall not be deemed Local Traffic. Further, Comcast Phone agrees to identify such interLATA traffic to BellSouth and to compensate BellSouth for originating and transporting such interLATA traffic to Comcast Phone at BellSouth's switched access tariff rates. This section is not intended to conflict with the definition of Local Traffic set forth in Section 7.1.1 above.

7.2 If Comcast Phone does not identify such interLATA traffic to BellSouth, to the best of BellSouth's ability BellSouth will determine which whole Comcast Phone NPA/NXXs on which to charge the applicable rates for originating network access service as reflected in BellSouth's Access Service Tariff. BellSouth shall make appropriate billing adjustments if Comcast Phone can provide sufficient information for BellSouth to determine whether or not said traffic is Local Traffic.

7.3 **Jurisdictional Reporting**

7.3.1 **Percent Local Use**. Each Party shall report to the other a Percent Local Usage ("PLU") factor. The application of the PLU will determine the amount of local minutes to be billed to the other Party. For purposes of developing the PLU, each Party shall consider every local call and every long distance call, excluding Transit Traffic. Each Party shall update its PLU on the first of January, April, July and October of the year and shall send it to the other Party to be received no later than 30 days after the first of each such month based on local usage for the past three months ending the last day of December, March, June and September, respectively. Requirements associated with PLU calculation and reporting shall be as set forth in BellSouth's Jurisdictional Factors Reporting Guide which can be found at the following web site: http://interconnection.bellsouth.com/guides/ixc/pdf/factgu.pdf. Notwithstanding the foregoing, where the terminating Party has message recording technology that identifies the jurisdiction of traffic terminated as defined in this Agreement, such information, in lieu of the PLU factor, shall at the terminating Party's option be utilized to determine the appropriate local usage compensation to be paid.

7.3.2 **Percent Local Facility**. Each Party shall report to the other a Percent Local Facility ("PLF") factor. The application of the PLF will determine the portion of switched dedicated transport to be billed per the local jurisdiction rates. The PLF shall be applied to Multiplexing, Local Channel and Interoffice Channel Switched Dedicated Transport utilized in the provision of local interconnection trunks. Each Party shall update its PLF on the first of January, April, July and October of the year and shall send it to the other Party to be received no later than 30 days after the first of each such month to be effective the first bill period the following month, respectively. Requirements associated with PLU and PLF calculation and reporting shall be as set forth in BellSouth's Jurisdictional Factors Reporting Guide which can be found at the following web site: http://interconnection.bellsouth.com/guides/ixc/pdf/factgu.pdf.

7.3.3 **Percent Interstate Usage**. Each Party shall report to the other the projected Percent Interstate Usage ("PIU") factor. All jurisdictional report requirements, rules and regulations for Interexchange Carriers specified in BellSouth's Intrastate Access Services Tariff will apply to Comcast Phone. After interstate and intrastate traffic percentages have been determined by use of PIU procedures, the PLU and PLF factors will be used for application and billing of local interconnection. Each Party shall update its PIUs on the first of January, April, July and October of the year and shall send it to the other Party to be received no later than 30 days after the first of each such month, for all services showing the percentages of use (PIUs, PLU, and PLF) for the past three months ending the last day of December, March, June and September. Notwithstanding the foregoing, where the terminating Party has message recording technology that identifies the jurisdiction of traffic terminated as defined in this Agreement, such information, in lieu of the PIU and PLU factors, shall at the terminating Party's option be utilized to determine the appropriate local usage compensation to be paid.

7.3.4 Notwithstanding the provisions in Section 7.3.1, 7.3.2, and 7.3.3 above, where the terminating Party has message recording technology that identifies the jurisdiction of traffic terminated as defined in this Agreement, such information shall, at the terminating Party's option, be utilized to determine the appropriate jurisdictional reporting factors (PLU, PIU, and/or PLF), in lieu of those provided by the originating Party. In the event that the terminating Party opts to utilize its own data to determine jurisdictional reporting factors, such terminating Party shall notify the originating Party at least 15 days prior to the beginning of the calendar quarter in which the terminating Party will begin to utilize its own data. Such factors shall subject to the Dispute Resolution provisions in this Agreement, as well as the Audit provisions set forth in 7.3.5 below.

7.3.5 **Audits.** On thirty (30) days written notice, each Party must provide the other the ability and opportunity to conduct an annual audit to ensure the proper billing of traffic. BellSouth and Comcast Phone shall retain records of call detail for a minimum of nine months from which the PLU, PLF and/or PIU can be ascertained. The audit shall be conducted during normal business hours, of the Party being audited, at an office designated by the Party being audited. Audit requests shall not be submitted more frequently than one (1) time per calendar

year. Audits shall be performed by a mutually acceptable independent auditor paid for by the Party requesting the audit. The PLF, PLU and/or PIU shall be adjusted based upon the audit results and shall apply for the quarter the audit was completed, for the quarter prior to the completion of the audit, and for the two quarters following the completion of the audit. If, as a result of an audit, either Party is found to have overstated the PLF, PLU and/or PIU by twenty percentage points (20%) or more, that Party shall reimburse the auditing Party for the cost of the audit.

7.4 **Compensation for 8XX Traffic**

7.4.1 Compensation for 8XX Traffic. Each Party shall pay the other the appropriate switched access charges set forth in the billing Parties' intrastate or interstate switched access tariffs. Each Party will pay the other Party the database query charge as set forth in the billing Parties' intrastate or interstate switched access tariffs as applicable.

7.4.2 Records for 8XX Billing. Each Party will provide to the other the appropriate records necessary for billing intraLATA 8XX customers. The records provided will be in a standard EMI format.

7.4.3 8XX Access Screening. BellSouth's provision of 8XX Toll Free Dialing ("TFD") to Comcast Phone requires interconnection from Comcast Phone to BellSouth's 8XX Signal Channel Point ("SCP"). Such interconnections shall be established pursuant to BellSouth's Common Channel Signaling Interconnection Guidelines and Telcordia's CCS Network Interface Specification document, TR-TSV-000905. If Comcast Phone requires 8XX 10 digit screening from BellSouth, then Comcast Phone shall establish SS7 interconnection at the BellSouth Local Signal Transfer Points serving the BellSouth 8XX SCPs that Comcast Phone desires to query. The terms and conditions for 8XX TFD are set out in BellSouth's Intrastate Access Services Tariff.

7.5 **Mutual Provision of Switched Access Service**

7.5.1 Switched Access Traffic. Switched Access Traffic is described as telephone calls requiring local transmission or switching services for the purpose of the origination or termination of Telephone Toll Service. Switched Access Traffic includes, but is not limited to, the following types of traffic: Feature Group A, Feature Group B, Feature Group C, Feature Group D, toll free access (e.g., 8XX), 900 access and their successors. Additionally, any Public Switched Telephone Network interexchange telecommunications traffic, regardless of transport protocol method, where the originating and terminating points, end-to-end points, are in different LATAs, or are in the same LATA and the Parties' Switched Access services are used for the origination or termination of the call, shall be considered Switched Access Traffic. Irrespective of transport protocol method used, a call which originates in one LATA and terminates in another LATA (i.e., the end-to-end points of the call) or in which the Parties' Switched Access Services are used for the origination or termination of the call, shall not be considered Local Traffic or ISP-bound Traffic.

7.5.2 Neither Comcast Phone nor BellSouth anticipate that they will provide Interexchange Service to the other Party's end users. In the event a Party offers stand-alone Interexchange Service to the other Party's end users, charges for such service shall be governed by applicable tariffs."

7.5.3 Where the originating Party delivers a call to the terminating Party over switched access facilities, the originating Party will pay the terminating Party terminating, switched access charges as set forth in the terminating Party's tariff, as appropriate.

7.5.4 When Comcast Phone's end office switch provides an access service connection to or from an interexchange carrier ("IXC") by a direct trunk group to the IXC utilizing BellSouth facilities, each Party will provide its own access services to the IXC and bill on a multi-bill, multi-tariff meet-point basis. Each Party will bill its own access services rates to the IXC with the exception of the interconnection charge. The interconnection charge will be billed by Comcast Phone as the Party providing the end office function. Each party will use the Multiple Exchange Carrier Access Billing (MECAB) guidelines to establish meet point billing for all applicable traffic. The parties shall utilize a thirty (30) day billing period.

7.5.4.1 When Comcast Phone's end office subtends the BellSouth Access Tandem switch for receipt or delivery of switched access traffic and provides an access service connection to or from an IXC via BellSouth's Access Tandem switch, BellSouth, as the tandem company agrees to provide to Comcast Phone, as the End Office Company, as defined in MECAB, at no charge, all the switched access detail usage data, recorded at the access tandem, within no more than sixty (60) days after the recording date. Each Party will timely notify the other when it is not feasible to meet these requirements. As business requirements change, data reporting requirements may be modified as necessary, upon the mutual agreement of the Parties, as long as MECAB requirements are maintained.

7.5.5 BellSouth, as the tandem provider company, will retain for a minimum period of sixty (60) days past the date it provides Comcast Phone the relevant switched access detail usage data, access message detail sufficient to recreate any data that is lost or damaged by the tandem provider company or any third party involved in processing or transporting data.

7.5.6 BellSouth, as the tandem provider company, agrees to recreate the lost or damaged data within forty-eight (48) hours of notification by Comcast Phone or by an authorized third party handling the data.

7.5.7 Any claims against BellSouth, as the tandem provider company, for unbillable or uncollectible revenue should be filed with the tandem provider company within 120 days of the usage date, where detail is provided within the sixty (60) day window set forth in Section 7.5.4.1 above.

7.5.8 BellSouth, as the tandem provider company shall keep records of its billing activities relating to jointly-provided Intrastate and Interstate access services in sufficient detail to permit the Subsequent Billing Party to, by formal or informal review or audit, to verify the accuracy and reasonableness of the jointly-provided

access billing data provided by the Initial Billing Party. Each Party agrees to cooperate in such formal or informal reviews or audits and further agrees to jointly review the findings of such reviews or audits in order to resolve any differences concerning the findings thereof.

7.5.9 Each Party agrees not to deliver switched access traffic to the other Party for termination except over switched access trunks and facilities.

7.6 **Transit Traffic**

7.6.1 BellSouth shall provide tandem switching and transport services for Comcast Phone's Transit Traffic. Rates for local Transit Traffic and ISP-bound Transit Traffic shall be the applicable Call Transport and Termination charges as set forth in Exhibit A to this Attachment. Rates for Switched Access Transit Traffic shall be the applicable charges as set forth in BellSouth Interstate or Intrastate Switched Access tariffs. Billing associated with all Transit Traffic shall be pursuant to MECAB guidelines. Traffic between Comcast Phone and Wireless Type 1 third parties shall not be treated as Transit Traffic from a routing or billing perspective. Traffic between Comcast Phone and Wireless Type 2A or a third party CLEC utilizing BellSouth switching shall not be treated as Transit Traffic from a routing or billing perspective until BellSouth and the Wireless carrier or a third party CLEC utilizing BellSouth switching (including UNE-P providers) have the capability to properly meet-point-bill in accordance with MECAB guidelines. Neither Party shall intentionally send transit traffic over the local trunks unless it has notified the other Party that the transit trunks are at capacity, or the result of misrouted traffic from a third party.

7.6.2 The delivery of traffic that transits the BellSouth network and is transported to another carrier's network is excluded from any BellSouth billing guarantees. BellSouth agrees to deliver Transit Traffic to the terminating carrier; provided, however, that Comcast Phone is solely responsible for negotiating and executing any appropriate contractual agreements with the terminating carrier for the exchange of Transit Traffic through the BellSouth network. BellSouth will not be liable for any compensation to the terminating carrier or to Comcast Phone. In the event that the terminating third party carrier imposes on BellSouth any charges or costs for the delivery of Transit Traffic, Comcast Phone shall reimburse BellSouth upon receipt of billing data adequate to validate such costs. Notwithstanding the foregoing, BellSouth shall make commercially reasonable efforts to avoid accepting such charges from terminating third party carriers, either under a contractual arrangement with the third party carrier or otherwise. If a call originated by Comcast Phone meets the definition of Transit Traffic pursuant to this agreement, then transit charges will apply. Additionally, the Parties agree that any billing to a third party or other telecommunications carrier under this section shall be pursuant to MECAB procedures.

**8. OPERATIONAL SUPPORT SYSTEMS ("OSS")**

8.1 The terms, conditions and rates for OSS are as set forth in BellSouth's FCC Tariff for Access Service Records.

**Exhibit B**

# Basic Architecture

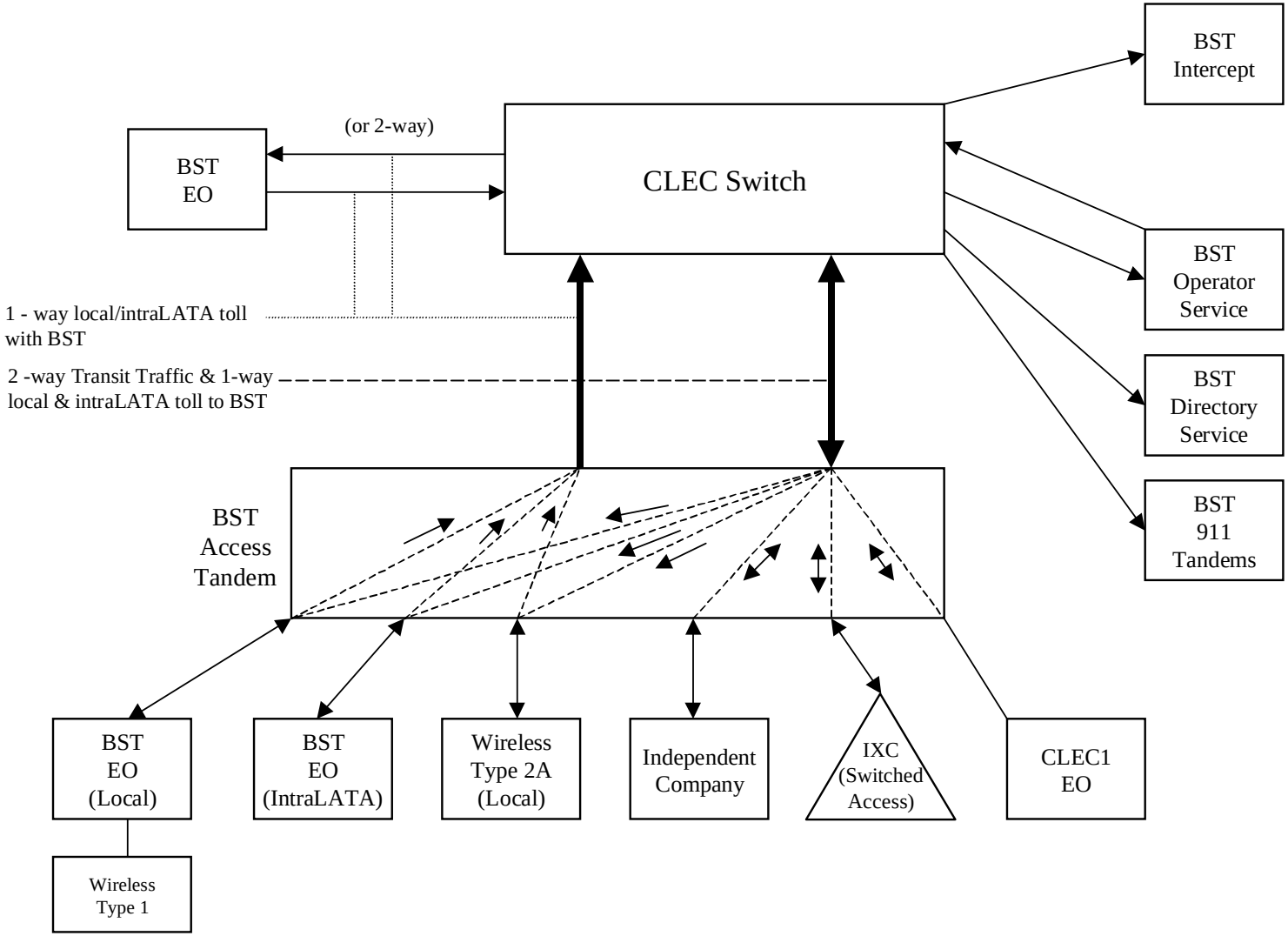

**Exhibit C**

# One-Way Architecture

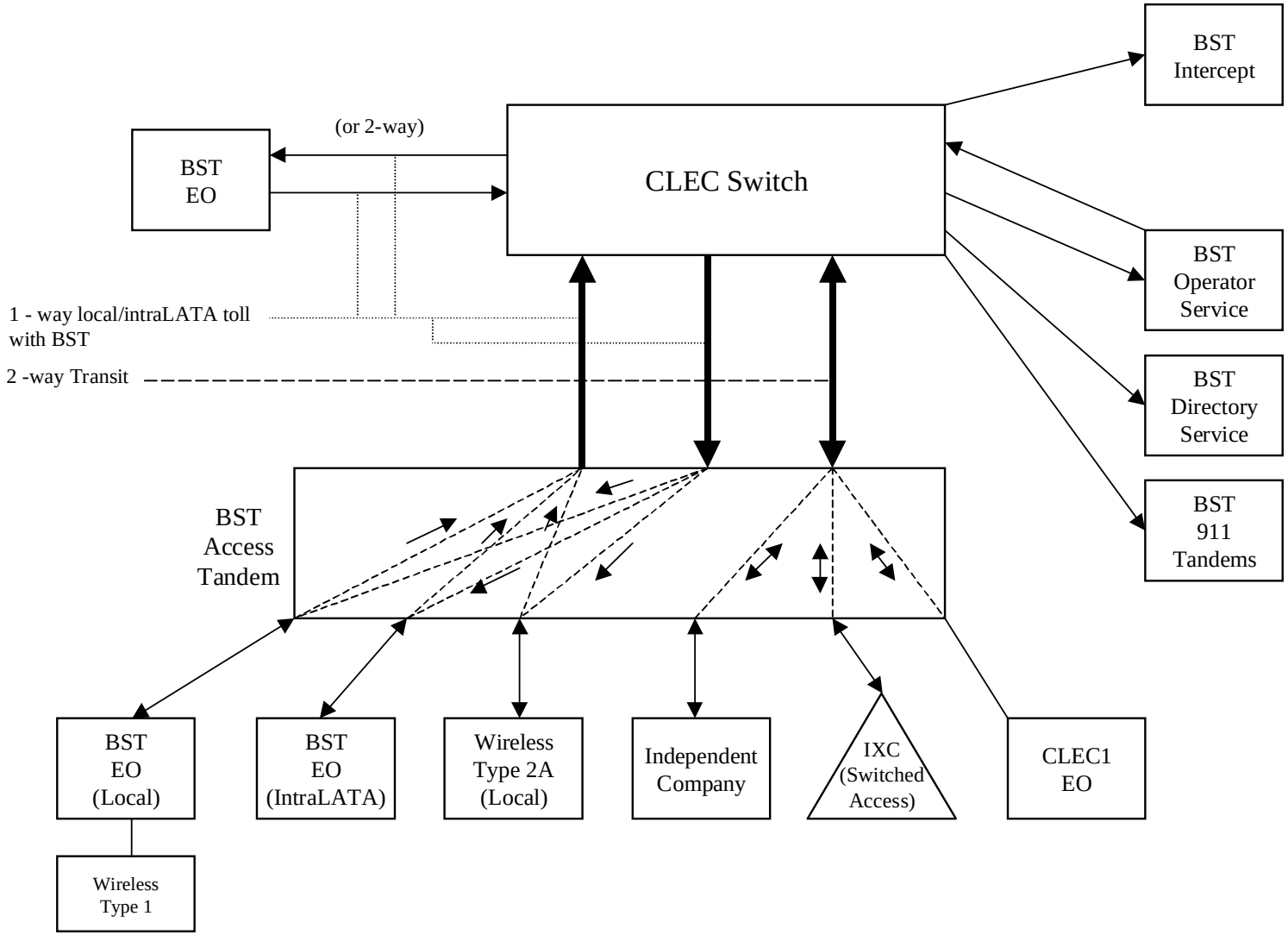

Exhibit D

# Two-Way Architecture

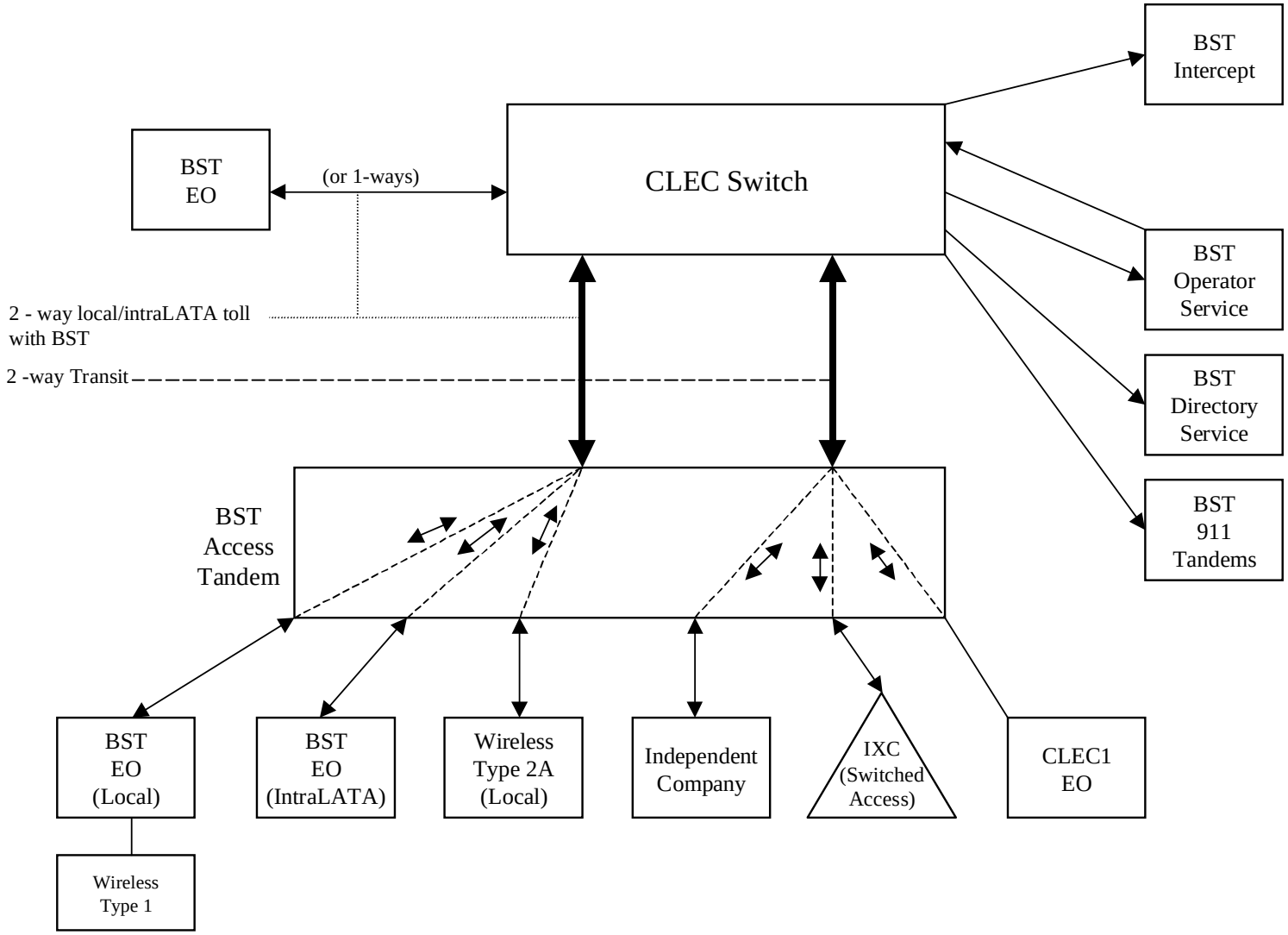


Version 4Q01: 12/01/01

**Exhibit E**

# Supergroup Architecture

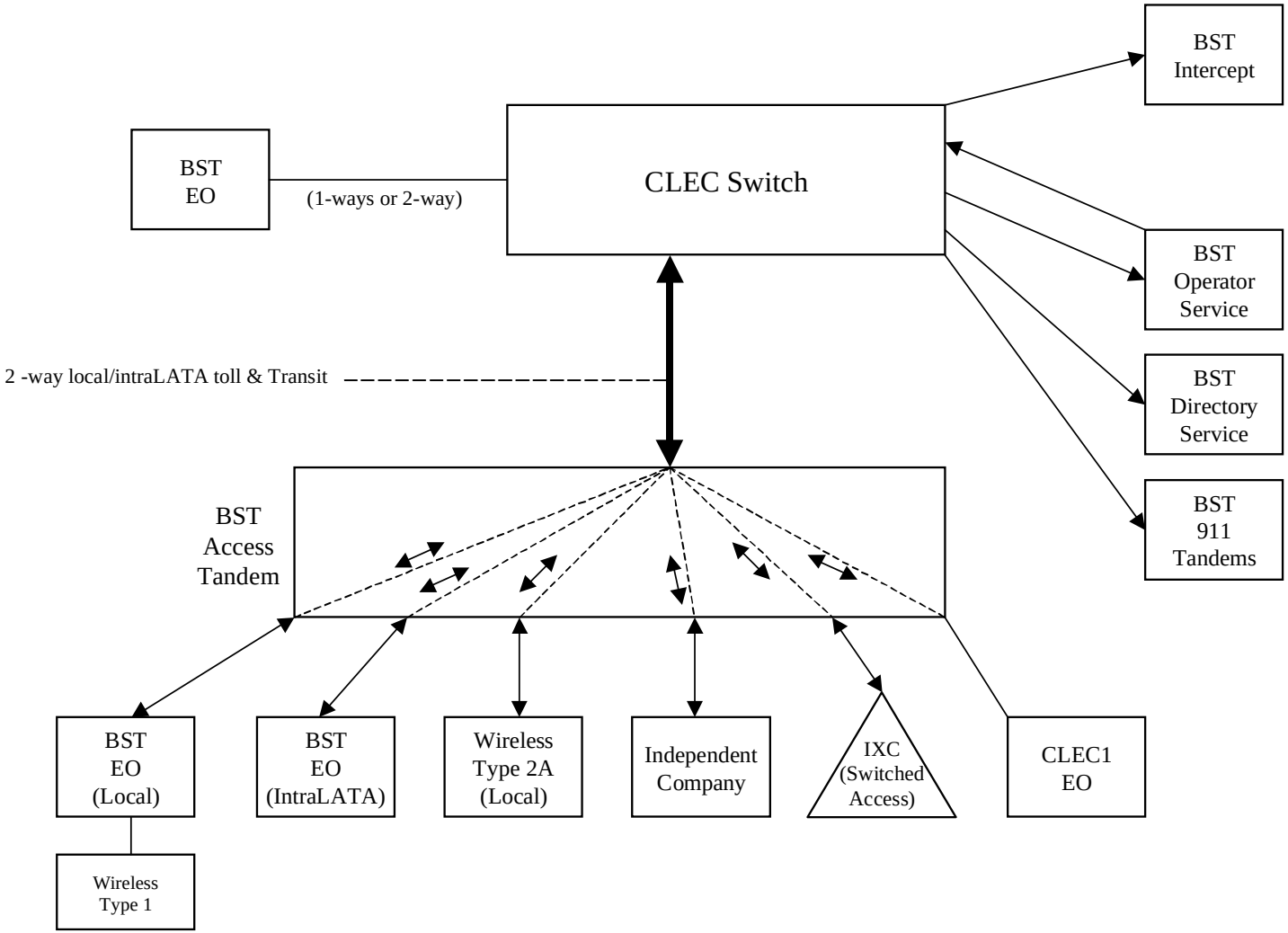

# DEFINITIONS
# EXHIBIT F

**Call Termination** has the meaning set forth for "termination" in 47CFR § 51.701(d).

**Call Transport** has the meaning set forth for "transport" in 47 CFR § 51.701(c).

**Call Transport and Termination** For the purposes of Attachment 3, Call Transport and Termination is used collectively to mean the switching and transport functions from the Interconnection Point to the last point of switching.

**Centralized Message Distribution System** ("CMDS") is the BellCore administered national system, based in Kansas City, Missouri, used to exchange EMI formatted data among host companies.

**Common (Shared) Transport** For the purposes of Attachment 3 Common (Shared) Transport is defined as the transport of the originating Party's traffic by the terminating Party over the terminating Party's common (shared) facilities between (1) the terminating Party's tandem switch and end office switch, (2) between the terminating Party's tandem switches, and/or (3) between the terminating Party's host and remote end office switches. All switches referred herein must be entered into the Local Exchange Routing Guide ("LERG").

**Daily Usage File** is the compilation of messages or copies of messages in standard Exchange Message Interface (EMI) format exchanged from BellSouth to a CLEC.

**Dedicated Interoffice Facility** For the purposes of Attachment 3, Dedicated Interoffice Facility is defined as a switch transport facility between a Party's Serving Wire Center and the first point of switching within the LATA on the other Party's network.

**End Office Switching** For the purposes of Attachment 3, End Office Switching is defined as the function that establishes a communications path between the trunk side and line side of the End Office switch.

**Exchange Message Interface** ("EMI") is the nationally administered standard format for the exchange of data among the Exchange Carriers within the telecommunications industry.

**Fiber Meet** as described in Attachment 3, is an interconnection arrangement whereby the Parties physically interconnect their networks via an optical fiber interface at which one Party's facilities, provisioning, and maintenance responsibility begins and the other Party's responsibility ends.

**Intercompany Settlements ("ICS")** is the revenue associated with charges billed by a company other than the company in whose service area such charges were incurred. ICS on a national level includes third number and credit card calls and is administered by BellCore's Credit Card and Third Number Settlement System (CATS). Included is traffic that originates in one Regional Bell Operating Company's (RBOC) territory and bills in another RBOC's territory.

**Interconnection Point ("IP")** For the purposes of Attachment 3, Interconnection Point ("IP") is the physical telecommunications equipment interface that interconnects the networks of BellSouth and Comcast Phone.

**ISP-bound Traffic** is as defined in Attachment 3, Section 7 of this Agreement.

**Local Channel** For the purposes of Attachment 3, Local Channel is defined as a switched transport facility between a Party's Interconnection Point and the IP's Serving Wire Center.

**Local Traffic** is as defined in Attachment 3, of this Agreement.

**Message Distribution** is routing determination and subsequent delivery of message data from one company to another. Also included is the interface function with CMDS, where appropriate.

**Multiple Exchange Carrier Access Billing ("MECAB")** means the document prepared by the Billing Committee of the Ordering and Billing Forum ("OBF:), which functions under the auspices of the Carrier Liaison Committee of the Alliance for Telecommunications Industry Solutions ("ATIS") and by Bellcore as Special Report SR-BDS-000983, Containing the recommended guidelines for the billing of Exchange Service access provided by two or more LECs and/or CLECs or by one LEC in two or more states within a single LATA.

**Non-Intercompany Settlement System ("NICS")** is the BellCore system that calculates non-intercompany settlements amounts due from one company to another within the same RBOC region. It includes credit card, third number and collect messages.

**Percent of Interstate Usage ("PIU")** is as described in Attachment 3.

**Percent Local Usage ("PLU")** is as described in Attachment 3.

**Revenue Accounting Office ("RAO") Status Company** is a local exchange company/alternate local exchange company that has been assigned a unique RAO code. Message data exchanged among RAO status companies is grouped (i.e. packed) according to From/To/Bill RAO combinations.

**Service Control Points** ("SCPs") are defined as databases that store information and have the ability to manipulate data required to offer particular services.

**Serving Wire Center** For the purposes of Attachment 3, Serving Wire Center ("SWC") is defined as the wire center owned by one Party from which the other Party would normally obtain dial tone for its IP.

**Signal Transfer Points** ("STPs") are signaling message switches that interconnect Signaling Links to route signaling messages between switches and databases. STPs enable the exchange of Signaling System 7 ("SS7") messages between switching elements, database elements and STPs. STPs provide access to various BellSouth and third party network elements such as local switching and databases.

**Signaling links** are dedicated transmission paths carrying signaling messages between carrier switches and signaling networks. Signal Link Transport is a set of two or four dedicated 56 kbps

transmission paths between Comcast Phone designated Signaling Points of Interconnection that provide a diverse transmission path and cross connect to a BellSouth Signal Transfer Point.

**Tandem Switching** For the purposes of Attachment 3,Tandem Switching is defined as the function that establishes a communications path between two switching offices through a third switching office through the provision of trunk side to trunk side switching.

**Transit Traffic** For the purposes of Attachment 3, Transit Traffic is traffic originating on Comcast Phone's network that is switched and/or transported by BellSouth and delivered to a third party's network, or traffic originating on a third party's network that is switched and/or transported by BellSouth and delivered to Comcast Phone's network.

| LOCAL INTERCONNECTION - Alabama | | | | | | | | | | | | | | Attachment: 3 | | Exhibit: A | |
|---|---|---|---|---|---|---|---|---|---|---|---|---|---|---|---|---|---|
| CATEGORY | RATE ELEMENTS | Interim | Zone | BCS | USOC | RATES ($) | | | | | Svc Order Submitted Elec per LSR | Svc Order Submitted Manually per LSR | Incremental Charge - Manual Svc Order vs. Electronic-1st | Incremental Charge - Manual Svc Order vs. Electronic-Add'l | Incremental Charge - Manual Svc Order vs. Electronic-Disc 1st | Incremental Charge - Manual Svc Order vs. Electronic-Disc Add'l |
| | | | | | | Rec | Nonrecurring | | Nonrecurring Disconnect | | OSS Rates ($) | | | | | |
| | | | | | | | First | Add'l | First | Add'l | SOMEC | SOMAN | SOMAN | SOMAN | SOMAN | SOMAN |
| **LOCAL INTERCONNECTION (CALL TRANSPORT AND TERMINATION)** | | | | | | | | | | | | | | | | |
| **NOTE: "bk" beside a rate indicates that the Parties have agreed to bill and keep for that element pursuant to the terms and conditions in Attachment 3.** | | | | | | | | | | | | | | | | |
| **TANDEM SWITCHING** | | | | | | | | | | | | | | | | |
| | Tandem Switching Function Per MOU | | | | | 0.0004980bk | | | | | | | | | | |
| | Multiple Tandem Switching, per MOU (applies to intial tandem only) | | | | | 0.000498 | | | | | | | | | | |
| | Tandem Intermediary Charge, per MOU* | | | | | 0.0025 | | | | | | | | | | |
| *** This charge is applicable only to transit traffic and is applied in addition to applicable switching and/or interconnection charges.** | | | | | | | | | | | | | | | | |
| **TRUNK CHARGE** | | | | | | | | | | | | | | | | |
| | Installation Trunk Side Service - per DS0 | | | OHD | TPP6X | | 21.56bk | 8.12bk | | | | | | | | |
| | Installation Trunk Side Service - per DS0 | | | OHD | TPP9X | | 21.56bk | 8.12bk | | | | | | | | |
| | Dedicated End Office Trunk Port Service-per DS0** | | | OHD | TDEOP | 0.00 | | | | | | | | | | |
| | Dedicated End Office Trunk Port Service-per DS1** | | | OH1 OH1MS | TDE1P | 0.00 | | | | | | | | | | |
| | Dedicated Tandem Trunk Port Service-per DS0** | | | OHD | TDWOP | 0.00 | | | | | | | | | | |
| | Dedicated Tandem Trunk Port Service-per DS1** | | | OH1 OH1MS | TDW1P | 0.00 | | | | | | | | | | |
| **** This rate element is recovered on a per MOU basis and is included in the End Office Switching and Tandem Switching, per MOU rate elements** | | | | | | | | | | | | | | | | |
| **COMMON TRANSPORT (Shared)** | | | | | | | | | | | | | | | | |
| | Common Transport - Per Mile, Per MOU | | | | | 0.0000023bk | | | | | | | | | | |
| | Common Transport - Facilities Termination Per MOU | | | | | 0.0003224bk | | | | | | | | | | |
| **LOCAL INTERCONNECTION (DEDICATED TRANSPORT)** | | | | | | | | | | | | | | | | |
| **INTEROFFICE CHANNEL - DEDICATED TRANSPORT** | | | | | | | | | | | | | | | | |
| | Interoffice Channel - Dedicated Transport - 2-Wire Voice Grade - Per Mile per month | | | OHM | 1L5NF | 0.008838bk | | | | | | | | | | |
| | Interoffice Channel - Dedicated Transport- 2- Wire Voice Grade - Facility Termination per month | | | OHM | 1L5NF | 21.13bk | 40.54bk | 27.41bk | 16.74bk | 6.90bk | | | | | | |
| | Interoffice Channel - Dedicated Transport - 56 kbps - per mile per month | | | OHM | 1L5NK | 0.008838bk | | | | | | | | | | |
| | Interoffice Channel - Dedicated Transport - 56 kbps - Facility Termination per month | | | OHM | 1L5NK | 15.12bk | 40.54bk | 27.41bk | 16.74bk | 6.90bk | | | | | | |
| | Interoffice Channel - Dedicated Transport - 64 kbps - per mile per month | | | OHM | 1L5NK | 0.008838bk | | | | | | | | | | |
| | Interoffice Channel - Dedicated Transport - 64 kbps - Facility Termination per month | | | OHM | 1L5NK | 15.12bk | 40.54bk | 27.41bk | 16.74bk | 6.90bk | | | | | | |
| | Interoffice Channel - Dedicated Channel - DS1 - Per Mile per month | | | OH1, OH1MS | 1L5NL | 0.18bk | | | | | | | | | | |
| | Interoffice Channel - Dedicated Tranport - DS1 - Facility Termination per month | | | OH1, OH1MS | 1L5NL | 60.16bk | 89.27bk | 81.81bk | 16.35bk | 14.44bk | | | | | | |
| | Interoffice Channel - Dedicated Transport - DS3 - Per Mile per month | | | OH3, OH3MS | 1L5NM | 4.09bk | | | | | | | | | | |
| | Interoffice Channel - Dedicated Transport - DS3 - Facility Termination per month | | | OH3, OH3MS | 1L5NM | 703.52bk | 278.75bk | 162.76bk | 60.20bk | 58.46bk | | | | | | |
| **LOCAL CHANNEL - DEDICATED TRANSPORT** | | | | | | | | | | | | | | | | |
| | Local Channel - Dedicated - 2-Wire Voice Grade per month | | | OHM | TEFV2 | 13.97bk | 193.10bk | 33.17bk | 36.64bk | 3.20bk | | | | | | |
| | Local Channel - Dedicated - 4-Wire Voice Grade per month | | | OHM | TEFV4 | 14.93bk | 193.53bk | 33.60bk | 37.11bk | 3.67bk | | | | | | |
| | Local Channel - Dedicated - DS1 per month | | | OH1 | TEFHG | 35.76bk | 177.47bk | 153.72bk | 22.19bk | 15.26bk | | | | | | |
| | Local Channel - Dedicated - DS3 Facility Termination per month | | | OH3 | TEFHJ | 416.54bk | 451.52bk | 263.94bk | 119.49bk | 83.58bk | | | | | | |
| **LOCAL INTERCONNECTION MID-SPAN MEET** | | | | | | | | | | | | | | | | |
| | Local Channel - Dedicated - DS1 per month | | | OH1MS | TEFHG | 0.00 | 0.00 | | | | | | | | | |
| | Local Channel - Dedicated - DS3 per month | | | OH3MS | TEFHJ | 0.00 | 0.00 | | | | | | | | | |
| **MULTIPLEXERS** | | | | | | | | | | | | | | | | |
| | Channelization - DS1 to DS0 Channel System | | | OH1, OH1MS | SATN1 | 101.06bk | 91.04bk | 62.57bk | 10.54bk | 9.79bk | | | | | | |
| | DS3 to DS1 Channel System per month | | | OH3, OH3MS | SATNS | 166.13bk | 178.14bk | 93.97bk | 33.26bk | 31.63bk | | | | | | |
| | DS3 Interface Unit (DS1 COCI) per month | | | OH1, OH1MS | SATCO | 12.70bk | 6.58bk | 4.72bk | | | | | | | | |
| **SIGNALING (CCS7)** | | | | | | | | | | | | | | | | |

| LOCAL INTERCONNECTION - Louisiana | | | | | | | | | | | | | | Attachment: 3 | | Exhibit: A | |
|---|---|---|---|---|---|---|---|---|---|---|---|---|---|---|---|---|---|
| CATEGORY | RATE ELEMENTS | Interim | Zone | BCS | USOC | RATES ($) | | | | | Svc Order Submitted Elec per LSR | Svc Order Submitted Manually per LSR | Incremental Charge - Manual Svc Order vs. Electronic-1st | Incremental Charge - Manual Svc Order vs. Electronic-Add'l | Incremental Charge - Manual Svc Order vs. Electronic-Disc 1st | Incremental Charge - Manual Svc Order vs. Electronic-Disc Add'l |
| | | | | | | Rec | Nonrecurring | | Nonrecurring Disconnect | | OSS Rates ($) | | | | | |
| | | | | | | | First | Add'l | First | Add'l | SOMEC | SOMAN | SOMAN | SOMAN | SOMAN | SOMAN |
| **LOCAL INTERCONNECTION (CALL TRANSPORT AND TERMINATION)** | | | | | | | | | | | | | | | | |
| **NOTE: "bk" beside a rate indicates that the Parties have agreed to bill and keep for that element pursuant to the terms and conditions in Attachment 3.** | | | | | | | | | | | | | | | | |
| **TANDEM SWITCHING** | | | | | | | | | | | | | | | | |
| | Tandem Switching Function Per MOU | | | | | 0.0005507bk | | | | | | | | | | |
| | Multiple Tandem Switching, per MOU (applies to intial tandem only) | | | | | 0.0005507 | | | | | | | | | | |
| | Tandem Intermediary Charge, per MOU* | | | | | 0.0025 | | | | | | | | | | |
| *** This charge is applicable only to transit traffic and is applied in addition to applicable switching and/or interconnection charges.** | | | | | | | | | | | | | | | | |
| **TRUNK CHARGE** | | | | | | | | | | | | | | | | |
| | Installation Trunk Side Service - per DS0 | | | OHD | TPP6X | | 21.64bk | 8.15bk | | | | | | | | |
| | Installation Trunk Side Service - per DS0 | | | OHD | TPP9X | | 21.64bk | 8.15bk | | | | | | | | |
| | Dedicated End Office Trunk Port Service-per DS0** | | | OHD | TDEOP | 0.00 | | | | | | | | | | |
| | Dedicated End Office Trunk Port Service-per DS1** | | | OH1 OH1MS | TDE1P | 0.00 | | | | | | | | | | |
| | Dedicated Tandem Trunk Port Service-per DS0** | | | OHD | TDWOP | 0.00 | | | | | | | | | | |
| | Dedicated Tandem Trunk Port Service-per DS1** | | | OH1 OH1MS | TDW1P | 0.00 | | | | | | | | | | |
| **** This rate element is recovered on a per MOU basis and is included in the End Office Switching and Tandem Switching, per MOU rate elements** | | | | | | | | | | | | | | | | |
| **COMMON TRANSPORT (Shared)** | | | | | | | | | | | | | | | | |
| | Common Transport - Per Mile, Per MOU | | | | | 0.0000032bk | | | | | | | | | | |
| | Common Transport - Facilities Termination Per MOU | | | | | 0.0003748bk | | | | | | | | | | |
| **LOCAL INTERCONNECTION (DEDICATED TRANSPORT)** | | | | | | | | | | | | | | | | |
| **INTEROFFICE CHANNEL - DEDICATED TRANSPORT** | | | | | | | | | | | | | | | | |
| | Interoffice Channel - Dedicated Transport - 2-Wire Voice Grade - Per Mile per month | | | OHM | 1L5NF | 0.013bk | | | | | | | | | | |
| | Interoffice Channel - Dedicated Transport- 2- Wire Voice Grade - Facility Termination per month | | | OHM | 1L5NF | 22.6bk | 39.36bk | 26.62bk | | | | | | | | |
| | Interoffice Channel - Dedicated Transport - 56 kbps - per mile per month | | | OHM | 1L5NK | 0.013bk | | | | | | | | | | |
| | Interoffice Channel - Dedicated Transport - 56 kbps - Facility Termination per month | | | OHM | 1L5NK | 15.61bk | 39.37bk | 26.62bk | | | | | | | | |
| | Interoffice Channel - Dedicated Transport - 64 kbps - per mile per month | | | OHM | 1L5NK | 0.013bk | | | | | | | | | | |
| | Interoffice Channel - Dedicated Transport - 64 kbps - Facility Termination per month | | | OHM | 1L5NK | 15.61bk | 39.37bk | 26.62bk | | | | | | | | |
| | Interoffice Channel - Dedicated Channel - DS1 - Per Mile per month | | | OH1, OH1MS | 1L5NL | 0.2652bk | | | | | | | | | | |
| | Interoffice Channel - Dedicated Tranport - DS1 - Facility Termination per month | | | OH1, OH1MS | 1L5NL | 70.47bk | 86.69bk | 79.44bk | | | | | | | | |
| | Interoffice Channel - Dedicated Transport - DS3 - Per Mile per month | | | OH3, OH3MS | 1L5NM | 6.04bk | | | | | | | | | | |
| | Interoffice Channel - Dedicated Transport - DS3 - Facility Termination per month | | | OH3, OH3MS | 1L5NM | 850.45bk | 270.69bk | 158.05bk | | | | | | | | |
| **LOCAL CHANNEL - DEDICATED TRANSPORT** | | | | | | | | | | | | | | | | |
| | Local Channel - Dedicated - 2-Wire Voice Grade per month | | | OHM | TEFV2 | 18.32bk | 187.51bk | 32.21bk | | | | | | | | |
| | Local Channel - Dedicated - 4-Wire Voice Grade per month | | | OHM | TEFV4 | 19.41bk | 187.94bk | 32.63bk | | | | | | | | |
| | Local Channel - Dedicated - DS1 per month | | | OH1 | TEFHG | 39.18bk | 172.34bk | 149.27bk | | | | | | | | |
| | Local Channel - Dedicated - DS3 Facility Termination per month | | | OH3 | TEFHJ | 469.44bk | 438.46bk | 256.3bk | | | | | | | | |
| **LOCAL INTERCONNECTION MID-SPAN MEET** | | | | | | | | | | | | | | | | |
| | Local Channel - Dedicated - DS1 per month | | | OH1MS | TEFHG | 0.00 | 0.00 | | | | | | | | | |
| | Local Channel - Dedicated - DS3 per month | | | OH3MS | TEFHJ | 0.00 | 0.00 | | | | | | | | | |
| **MULTIPLEXERS** | | | | | | | | | | | | | | | | |
| | Channelization - DS1 to DS0 Channel System | | | OH1, OH1MS | SATN1 | 105.09bk | 88.41bk | 60.76bk | | | | | | | | |
| | DS3 to DS1 Channel System per month | | | OH3, OH3MS | SATNS | 201.48bk | 172.99bk | 91.25bk | | | | | | | | |
| | DS3 Interface Unit (DS1 COCI) per month | | | OH1, OH1MS | SATCO | 11.78bk | 6.39bk | 4.58bk | | | | | | | | |
| **SIGNALING (CCS7)** | | | | | | | | | | | | | | | | |

| LOCAL INTERCONNECTION - Mississippi | | | | | | | | | | | | | | Attachment: 3 | | Exhibit: A | |
|---|---|---|---|---|---|---|---|---|---|---|---|---|---|---|---|---|---|
| CATEGORY | RATE ELEMENTS | Interim | Zone | BCS | USOC | RATES ($) | | | | | Svc Order Submitted Elec per LSR | Svc Order Submitted Manually per LSR | Incremental Charge - Manual Svc Order vs. Electronic-1st | Incremental Charge - Manual Svc Order vs. Electronic-Add'l | Incremental Charge - Manual Svc Order vs. Electronic-Disc 1st | Incremental Charge - Manual Svc Order vs. Electronic-Disc Add'l |
| | | | | | | Rec | Nonrecurring | | Nonrecurring Disconnect | | OSS Rates ($) | | | | | |
| | | | | | | | First | Add'l | First | Add'l | SOMEC | SOMAN | SOMAN | SOMAN | SOMAN | SOMAN |
| **LOCAL INTERCONNECTION (CALL TRANSPORT AND TERMINATION)** | | | | | | | | | | | | | | | | |
| **NOTE: "bk" beside a rate indicates that the Parties have agreed to bill and keep for that element pursuant to the terms and conditions in Attachment 3.** | | | | | | | | | | | | | | | | |
| **TANDEM SWITCHING** | | | | | | | | | | | | | | | | |
| | Tandem Switching Function Per MOU | | | | | 0.0005379bk | | | | | | | | | | |
| | Multiple Tandem Switching, per MOU (applies to intial tandem only) | | | | | 0.0005379 | | | | | | | | | | |
| | Tandem Intermediary Charge, per MOU* | | | | | 0.0025 | | | | | | | | | | |
| *** This charge is applicable only to transit traffic and is applied in addition to applicable switching and/or interconnection charges.** | | | | | | | | | | | | | | | | |
| **TRUNK CHARGE** | | | | | | | | | | | | | | | | |
| | Installation Trunk Side Service - per DS0 | | | OHD | TPP6X | | 21.58bk | 8.13bk | | | | | | | | |
| | Installation Trunk Side Service - per DS0 | | | OHD | TPP9X | | 21.58bk | 8.13bk | | | | | | | | |
| | Dedicated End Office Trunk Port Service-per DS0** | | | OHD | TDEOP | 0.00 | | | | | | | | | | |
| | Dedicated End Office Trunk Port Service-per DS1** | | | OH1 OH1MS | TDE1P | 0.00 | | | | | | | | | | |
| | Dedicated Tandem Trunk Port Service-per DS0** | | | OHD | TDWOP | 0.00 | | | | | | | | | | |
| | Dedicated Tandem Trunk Port Service-per DS1** | | | OH1 OH1MS | TDW1P | 0.00 | | | | | | | | | | |
| **** This rate element is recovered on a per MOU basis and is included in the End Office Switching and Tandem Switching, per MOU rate elements** | | | | | | | | | | | | | | | | |
| **COMMON TRANSPORT (Shared)** | | | | | | | | | | | | | | | | |
| | Common Transport - Per Mile, Per MOU | | | | | 0.0000026bk | | | | | | | | | | |
| | Common Transport - Facilities Termination Per MOU | | | | | 0.0004541bk | | | | | | | | | | |
| **LOCAL INTERCONNECTION (DEDICATED TRANSPORT)** | | | | | | | | | | | | | | | | |
| **INTEROFFICE CHANNEL - DEDICATED TRANSPORT** | | | | | | | | | | | | | | | | |
| | Interoffice Channel - Dedicated Transport - 2-Wire Voice Grade - Per Mile per month | | | OHM | 1L5NF | 0.0098bk | | | | | | | | | | |
| | Interoffice Channel - Dedicated Transport- 2- Wire Voice Grade - Facility Termination per month | | | OHM | 1L5NF | 22.52bk | 40.77bk | 27.57bk | 17.26bk | 7.11bk | | | | | | |
| | Interoffice Channel - Dedicated Transport - 56 kbps - per mile per month | | | OHM | 1L5NK | 0.0098bk | | | | | | | | | | |
| | Interoffice Channel - Dedicated Transport - 56 kbps - Facility Termination per month | | | OHM | 1L5NK | 15.68bk | 40.78bk | 27.57bk | 17.26bk | 7.11bk | | | | | | |
| | Interoffice Channel - Dedicated Transport - 64 kbps - per mile per month | | | OHM | 1L5NK | 0.0098bk | | | | | | | | | | |
| | Interoffice Channel - Dedicated Transport - 64 kbps - Facility Termination per month | | | OHM | 1L5NK | 15.68bk | 40.78bk | 27.57bk | 17.26bk | 7.11bk | | | | | | |
| | Interoffice Channel - Dedicated Channel - DS1 - Per Mile per month | | | OH1, OH1MS | 1L5NL | 0.201bk | | | | | | | | | | |
| | Interoffice Channel - Dedicated Tranport - DS1 - Facility Termination per month | | | OH1, OH1MS | 1L5NL | 57.33bk | 89.79bk | 82.28bk | 16.86bk | 14.9bk | | | | | | |
| | Interoffice Channel - Dedicated Transport - DS3 - Per Mile per month | | | OH3, OH3MS | 1L5NM | 4.76bk | | | | | | | | | | |
| | Interoffice Channel - Dedicated Transport - DS3 - Facility Termination per month | | | OH3, OH3MS | 1L5NM | 641.9bk | 280.37bk | 163.7bk | 62.08bk | 60.29bk | | | | | | |
| **LOCAL CHANNEL - DEDICATED TRANSPORT** | | | | | | | | | | | | | | | | |
| | Local Channel - Dedicated - 2-Wire Voice Grade per month | | | OHM | TEFV2 | 14.91bk | 194.22bk | 33.36bk | 37.79bk | 3.3bk | | | | | | |
| | Local Channel - Dedicated - 4-Wire Voice Grade per month | | | OHM | TEFV4 | 15.99bk | 194.66bk | 33.8bk | 38.27bk | 3.78bk | | | | | | |
| | Local Channel - Dedicated - DS1 per month | | | OH1 | TEFHG | 36.83bk | 178.5bk | 154.61bk | 22.89bk | 15.74bk | | | | | | |
| | Local Channel - Dedicated - DS3 Facility Termination per month | | | OH3 | TEFHJ | 413.87bk | 454.13bk | 264.47bk | 123.23bk | 86.19bk | | | | | | |
| **LOCAL INTERCONNECTION MID-SPAN MEET** | | | | | | | | | | | | | | | | |
| | Local Channel - Dedicated - DS1 per month | | | OH1MS | TEFHG | 0.00 | 0.00 | | | | | | | | | |
| | Local Channel - Dedicated - DS3 per month | | | OH3MS | TEFHJ | 0.00 | 0.00 | | | | | | | | | |
| **MULTIPLEXERS** | | | | | | | | | | | | | | | | |
| | Channelization - DS1 to DS0 Channel System | | | OH1, OH1MS | SATN1 | 102.85bk | 91.57bk | 62.94bk | 10.87bk | 10.1bk | | | | | | |
| | DS3 to DS1 Channel System per month | | | OH3, OH3MS | SATNS | 170.63bk | 179.17bk | 94.52bk | 34.3bk | 32.82bk | | | | | | |
| | DS3 Interface Unit (DS1 COCI) per month | | | OH1, OH1MS | SATCO | 12.96bk | 6.62bk | 4.74bk | | | | | | | | |
| **SIGNALING (CCS7)** | | | | | | | | | | | | | | | | |

| LOCAL INTERCONNECTION - North Carolina | | | | | | | | | | | | | | Attachment: 3 Exh A | | | |
|---|---|---|---|---|---|---|---|---|---|---|---|---|---|---|---|---|---|
| CATEGORY | | RATE ELEMENTS | Interim | Zone | BCS | USOC | RATES($) | | | | | Svc Order Submitted Elec per LSR | Svc Order Submitted Manually per LSR | Incremental Charge - Manual Svc Order vs. Electronic-1st | Incremental Charge - Manual Svc Order vs. Electronic-Add'l | Incremental Charge - Manual Svc Order vs. Electronic-Disc 1st | Incremental Charge - Manual Svc Order vs. Electronic-Disc Add'l |
| | | | | | | | Rec | Nonrecurring | | Nonrecurring Disconnect | | OSS Rates($) | | | | | |
| | | | | | | | | First | Add'l | First | Add'l | SOMEC | SOMAN | SOMAN | SOMAN | SOMAN | SOMAN |
| | | | | | | | | | | | | | | | | | |
| **LOCAL INTERCONNECTION (CALL TRANSPORT AND TERMINATION)** | | | | | | | | | | | | | | | | | |
| | **NOTE: "bk" beside a rate indicates that the Parties have agreed to bill and keep for that element pursuant to the terms and conditions in Attachment 3.** | | | | | | | | | | | | | | | | |
| | **TANDEM SWITCHING** | | | | | | | | | | | | | | | | |
| | | Tandem Switching Function Per MOU | | | | | 0.0004788bk | | | | | | | | | | |
| | | Multiple Tandem Switching, per MOU (applies to intial tandem only) | | | | | 0.0004788 | | | | | | | | | | |
| | | Tandem Intermediary Charge, per MOU* | | | | | 0.0025 | | | | | | | | | | |
| | *** This charge is applicable only to transit traffic and is applied in addition to applicable switching and/or interconnection charges.** | | | | | | | | | | | | | | | | |
| | **TRUNK CHARGE** | | | | | | | | | | | | | | | | |
| | | Installation Trunk Side Service - per DS0 | | | OHD | TPP6X | | 21.55bk | 8.12bk | | | | | | | | |
| | | Installation Trunk Side Service - per DS0 | | | OHD | TPP9X | | 21.55bk | 8.12bk | | | | | | | | |
| | | Dedicated End Office Trunk Port Service-per DS0** | | | OHD | TDEOP | 0.00 | | | | | | | | | | |
| | | Dedicated End Office Trunk Port Service-per DS1** | | | OH1 OH1MS | TDE1P | 0.00 | | | | | | | | | | |
| | | Dedicated Tandem Trunk Port Service-per DS0** | | | OHD | TDWOP | 0.00 | | | | | | | | | | |
| | | Dedicated Tandem Trunk Port Service-per DS1** | | | OH1 OH1MS | TDW1P | 0.00 | | | | | | | | | | |
| | **** This rate element is recovered on a per MOU basis and is included in the End Office Switching and Tandem Switching, per MOU rate elements** | | | | | | | | | | | | | | | | |
| | **COMMON TRANSPORT (Shared)** | | | | | | | | | | | | | | | | |
| | | Common Transport - Per Mile, Per MOU | | | | | 0.0000023bk | | | | | | | | | | |
| | | Common Transport - Facilities Termination Per MOU | | | | | 0.0001676bk | | | | | | | | | | |
| **LOCAL INTERCONNECTION (DEDICATED TRANSPORT)** | | | | | | | | | | | | | | | | | |
| | **INTEROFFICE CHANNEL - DEDICATED TRANSPORT** | | | | | | | | | | | | | | | | |
| | | Interoffice Channel - Dedicated Transport - 2-Wire Voice Grade - Per Mile per month | | | OHM | 1L5NF | 0.0095bk | | | | | | | | | | |
| | | Interoffice Channel - Dedicated Transport- 2- Wire Voice Grade - Facility Termination per month | | | OHM | 1L5NF | 12.12bk | 39.36bk | 26.62bk | | | | | | | | |
| | | Interoffice Channel - Dedicated Transport - 56 kbps - per mile per month | | | OHM | 1L5NK | 0.0095bk | | | | | | | | | | |
| | | Interoffice Channel - Dedicated Transport - 56 kbps - Facility Termination per month | | | OHM | 1L5NK | 7.47bk | 39.37bk | 26.62bk | | | | | | | | |
| | | Interoffice Channel - Dedicated Transport - 64 kbps - per mile per month | | | OHM | 1L5NK | 0.0095bk | | | | | | | | | | |
| | | Interoffice Channel - Dedicated Transport - 64 kbps - Facility Termination per month | | | OHM | 1L5NK | 7.47bk | 39.37bk | 26.62bk | | | | | | | | |
| | | Interoffice Channel - Dedicated Channel - DS1 - Per Mile per month | | | OH1, OH1MS | 1L5NL | 0.1938bk | | | | | | | | | | |
| | | Interoffice Channel - Dedicated Tranport - DS1 - Facility Termination per month | | | OH1, OH1MS | 1L5NL | 31.19bk | 86.69bk | 79.44bk | | | | | | | | |
| | | Interoffice Channel - Dedicated Transport - DS3 - Per Mile per month | | | OH3, OH3MS | 1L5NM | 4.44bk | | | | | | | | | | |
| | | Interoffice Channel - Dedicated Transport - DS3 - Facility Termination per month | | | OH3, OH3MS | 1L5NM | 329.91bk | 270.69bk | 158.05bk | | | | | | | | |
| | **LOCAL CHANNEL - DEDICATED TRANSPORT** | | | | | | | | | | | | | | | | |
| | | Local Channel - Dedicated - 2-Wire Voice Grade per month | | | OHM | TEFV2 | 6.29bk | 187.51bk | 32.21bk | | | | | | | | |
| | | Local Channel - Dedicated - 4-Wire Voice Grade per month | | | OHM | TEFV4 | 7.08bk | 187.94bk | 32.63bk | | | | | | | | |
| | | Local Channel - Dedicated - DS1 per month | | | OH1 | TEFHG | 22.13bk | 172.34bk | 149.27bk | | | | | | | | |
| | | Local Channel - Dedicated - DS3 Facility Termination per month | | | OH3 | TEFHJ | 82.89bk | 438.46bk | 256.3bk | | | | | | | | |
| | **LOCAL INTERCONNECTION MID-SPAN MEET** | | | | | | | | | | | | | | | | |
| | | Local Channel - Dedicated - DS1 per month | | | OH1MS | TEFHG | 0.00 | 0.00 | | | | | | | | | |
| | | Local Channel - Dedicated - DS3 per month | | | OH3MS | TEFHJ | 0.00 | 0.00 | | | | | | | | | |
| | **MULTIPLEXERS** | | | | | | | | | | | | | | | | |
| | | Channelization - DS1 to DS0 Channel System | | | OH1, OH1MS | SATN1 | 146.69bk | 197.78bk | 140.06bk | | | | | | | | |
| | | DS3 to DS1 Channel System per month | | | OH3, OH3MS | SATNS | 233.1bk | 403.97bk | 234.4bk | | | | | | | | |
| | | DS3 Interface Unit (DS1 COCI) per month | | | OH1, OH1MS | SATCO | 16.07bk | 13.09bk | 9.38bk | | | | | | | | |
| **SIGNALING (CCS7)** | | | | | | | | | | | | | | | | | |
| | | CCS7 Signaling Connection, Per DS1 level link (A link) | | | UDB | TPP6A | 8.13 | 34.50 | 34.50 | | | | | | | | |
| | | CCS7 Signaling Connection, Per DS3 level link (A link) | | | UDB | TPP9A | 8.13 | 34.50 | 34.50 | | | | | | | | |

| LOCAL INTERCONNECTION - North Carolina | | | | | | | | | | | | | | Attachment: 3 Exh A | | | |
|---|---|---|---|---|---|---|---|---|---|---|---|---|---|---|---|---|---|
| CATEGORY | | RATE ELEMENTS | Interim | Zone | BCS | USOC | RATES($) | | | | | Svc Order Submitted Elec per LSR | Svc Order Submitted Manually per LSR | Incremental Charge - Manual Svc Order vs. Electronic-1st | Incremental Charge - Manual Svc Order vs. Electronic-Add'l | Incremental Charge - Manual Svc Order vs. Electronic-Disc 1st | Incremental Charge - Manual Svc Order vs. Electronic-Disc Add'l |
| | | | | | | | Rec | Nonrecurring | | Nonrecurring Disconnect | | OSS Rates($) | | | | | |
| | | | | | | | | First | Add'l | First | Add'l | SOMEC | SOMAN | SOMAN | SOMAN | SOMAN | SOMAN |
| | | CCS7 Signaling Connection, Per DS1 level link (B link) (also known as D link) | | | UDB | TPP6B | 8.13 | 34.50 | 34.50 | | | | | | | | |
| | | CCS7 Signaling Connection, Per DS3 level link (B link) (also known as D link) | | | UDB | TPP9B | 8.13 | 34.50 | 34.50 | | | | | | | | |
| | | CCS7 Signaling Termination, Per STP Port | | | UDB | PT8SX | 108.19 | | | | | | | | | | |
| | | CCS7 Signaling Usage Surrogate, per link per LATA | | | UDB | STU56 | 644.04 | | | | | | | | | | |
| | | CCS7 Signaling Point Code, per Originating Point Code Establishment or Change, per STP affected | | | UDB | CCAPO | | 55.77 | 55.77 | | | | | | | | |
| | | CCS7 Signaling Point Code, per Destination Point Code Establishment or Change, Per Stp Affected | | | UDB | CCAPD | | 8.00 | 8.00 | | | | | | | | |
| | | CCS7 Signaling Usage, Per ISUP Message | | | | | 0.00004 | | | | | | | | | | |
| | | CCS7 Signaling Usage, Per TCAP Message | | | | | 0.00009 | | | | | | | | | | |

| LOCAL INTERCONNECTION - South Carolina | | | | | | | | | | | | | | Attachment: 3 | | Exhibit: A | |
|---|---|---|---|---|---|---|---|---|---|---|---|---|---|---|---|---|---|
| CATEGORY | RATE ELEMENTS | Interim | Zone | BCS | USOC | RATES ($) | | | | | Svc Order Submitted Elec per LSR | Svc Order Submitted Manually per LSR | Incremental Charge - Manual Svc Order vs. Electronic-1st | Incremental Charge - Manual Svc Order vs. Electronic-Add'l | Incremental Charge - Manual Svc Order vs. Electronic-Disc 1st | Incremental Charge - Manual Svc Order vs. Electronic-Disc Add'l |
| | | | | | | Rec | Nonrecurring | | Nonrecurring Disconnect | | OSS Rates ($) | | | | | |
| | | | | | | | First | Add'l | First | Add'l | SOMEC | SOMAN | SOMAN | SOMAN | SOMAN | SOMAN |
| **LOCAL INTERCONNECTION (CALL TRANSPORT AND TERMINATION)** | | | | | | | | | | | | | | | | |
| **NOTE: "bk" beside a rate indicates that the Parties have agreed to bill and keep for that element pursuant to the terms and conditions in Attachment 3.** | | | | | | | | | | | | | | | | |
| **TANDEM SWITCHING** | | | | | | | | | | | | | | | | |
| | Tandem Switching Function Per MOU | | | | | 0.0007360bk | | | | | | | | | | |
| | Multiple Tandem Switching, per MOU (applies to intial tandem only) | | | | | 0.000736 | | | | | | | | | | |
| | Tandem Intermediary Charge, per MOU* | | | | | 0.0025 | | | | | | | | | | |
| *** This charge is applicable only to transit traffic and is applied in addition to applicable switching and/or interconnection charges.** | | | | | | | | | | | | | | | | |
| **TRUNK CHARGE** | | | | | | | | | | | | | | | | |
| | Installation Trunk Side Service - per DS0 | | | OHD | TPP6X | | 21.65bk | 8.16bk | | | | | | | | |
| | Installation Trunk Side Service - per DS0 | | | OHD | TPP9X | | 21.65bk | 8.16bk | | | | | | | | |
| | Dedicated End Office Trunk Port Service-per DS0** | | | OHD | TDEOP | 0.00 | | | | | | | | | | |
| | Dedicated End Office Trunk Port Service-per DS1** | | | OH1 OH1MS | TDE1P | 0.00 | | | | | | | | | | |
| | Dedicated Tandem Trunk Port Service-per DS0** | | | OHD | TDWOP | 0.00 | | | | | | | | | | |
| | Dedicated Tandem Trunk Port Service-per DS1** | | | OH1 OH1MS | TDW1P | 0.00 | | | | | | | | | | |
| **** This rate element is recovered on a per MOU basis and is included in the End Office Switching and Tandem Switching, per MOU rate elements** | | | | | | | | | | | | | | | | |
| **COMMON TRANSPORT (Shared)** | | | | | | | | | | | | | | | | |
| | Common Transport - Per Mile, Per MOU | | | | | 0.0000045bk | | | | | | | | | | |
| | Common Transport - Facilities Termination Per MOU | | | | | 0.0004095bk | | | | | | | | | | |
| **LOCAL INTERCONNECTION (DEDICATED TRANSPORT)** | | | | | | | | | | | | | | | | |
| **INTEROFFICE CHANNEL - DEDICATED TRANSPORT** | | | | | | | | | | | | | | | | |
| | Interoffice Channel - Dedicated Transport - 2-Wire Voice Grade - Per Mile per month | | | OHM | 1L5NF | 0.0167bk | | | | | | | | | | |
| | Interoffice Channel - Dedicated Transport- 2- Wire Voice Grade - Facility Termination per month | | | OHM | 1L5NF | 24.3bk | 40.63bk | 27.47bk | 16.77bk | 6.91bk | | | | | | |
| | Interoffice Channel - Dedicated Transport - 56 kbps - per mile per month | | | OHM | 1L5NK | 0.0167bk | | | | | | | | | | |
| | Interoffice Channel - Dedicated Transport - 56 kbps - Facility Termination per month | | | OHM | 1L5NK | 16.76bk | 40.63bk | 27.47bk | 16.77bk | 6.91bk | | | | | | |
| | Interoffice Channel - Dedicated Transport - 64 kbps - per mile per month | | | OHM | 1L5NK | 0.0167bk | | | | | | | | | | |
| | Interoffice Channel - Dedicated Transport - 64 kbps - Facility Termination per month | | | OHM | 1L5NK | 16.76bk | 40.63bk | 27.47bk | 16.77bk | 6.91bk | | | | | | |
| | Interoffice Channel - Dedicated Channel - DS1 - Per Mile per month | | | OH1, OH1MS | 1L5NL | 0.3415bk | | | | | | | | | | |
| | Interoffice Channel - Dedicated Tranport - DS1 - Facility Termination per month | | | OH1, OH1MS | 1L5NL | 77.14bk | 89.47bk | 81.99bk | 16.39bk | 14.48bk | | | | | | |
| | Interoffice Channel - Dedicated Transport - DS3 - Per Mile per month | | | OH3, OH3MS | 1L5NM | 8.02bk | | | | | | | | | | |
| | Interoffice Channel - Dedicated Transport - DS3 - Facility Termination per month | | | OH3, OH3MS | 1L5NM | 880.65bk | 279.37bk | 163.12bk | 60.33bk | 58.59bk | | | | | | |
| **LOCAL CHANNEL - DEDICATED TRANSPORT** | | | | | | | | | | | | | | | | |
| | Local Channel - Dedicated - 2-Wire Voice Grade per month | | | OHM | TEFV2 | 15.33bk | 193.53bk | 33.24bk | 36.72bk | 3.21bk | | | | | | |
| | Local Channel - Dedicated - 4-Wire Voice Grade per month | | | OHM | TEFV4 | 16.54bk | 193.97bk | 33.68bk | 37.19bk | 3.68bk | | | | | | |
| | Local Channel - Dedicated - DS1 per month | | | OH1 | TEFHG | 42.62bk | 177.87bk | 154.06bk | 22.24bk | 15.3bk | | | | | | |
| | Local Channel - Dedicated - DS3 Facility Termination per month | | | OH3 | TEFHJ | 446bk | 452.52bk | 264.53bk | 119.75bk | 83.77bk | | | | | | |
| **LOCAL INTERCONNECTION MID-SPAN MEET** | | | | | | | | | | | | | | | | |
| | Local Channel - Dedicated - DS1 per month | | | OH1MS | TEFHG | 0.00 | 0.00 | | | | | | | | | |
| | Local Channel - Dedicated - DS3 per month | | | OH3MS | TEFHJ | 0.00 | 0.00 | | | | | | | | | |
| **MULTIPLEXERS** | | | | | | | | | | | | | | | | |
| | Channelization - DS1 to DS0 Channel System | | | OH1, OH1MS | SATN1 | 107.57bk | 91.24bk | 62.71bk | 10.56bk | 9.81bk | | | | | | |
| | DS3 to DS1 Channel System per month | | | OH3, OH3MS | SATNS | 144.02bk | 178.54bk | 94.18bk | 33.33bk | 31.9bk | | | | | | |
| | DS3 Interface Unit (DS1 COCI) per month | | | OH1, OH1MS | SATCO | 8.64bk | 6.59bk | 4.73bk | | | | | | | | |
| **SIGNALING (CCS7)** | | | | | | | | | | | | | | | | |

| LOCAL INTERCONNECTION - Tennessee | | | | | | | | | | | | | | Attachment: 3 | | Exhibit: A | |
|---|---|---|---|---|---|---|---|---|---|---|---|---|---|---|---|---|---|
| CATEGORY | RATE ELEMENTS | Interim | Zone | BCS | USOC | RATES ($) | | | | | Svc Order Submitted Elec per LSR | Svc Order Submitted Manually per LSR | Incremental Charge - Manual Svc Order vs. Electronic-1st | Incremental Charge - Manual Svc Order vs. Electronic-Add'l | Incremental Charge - Manual Svc Order vs. Electronic-Disc 1st | Incremental Charge - Manual Svc Order vs. Electronic-Disc Add'l |
| | | | | | | Rec | Nonrecurring First | Nonrecurring Add'l | Nonrecurring Disconnect First | Nonrecurring Disconnect Add'l | OSS Rates ($) | | | | | |
| | | | | | | | | | | | SOMEC | SOMAN | SOMAN | SOMAN | SOMAN | SOMAN |
| LOCAL INTERCONNECTION (CALL TRANSPORT AND TERMINATION) | | | | | | | | | | | | | | | | |
| NOTE: "bk" beside a rate indicates that the Parties have agreed to bill and keep for that element pursuant to the terms and conditions in Attachment 3. | | | | | | | | | | | | | | | | |
| TANDEM SWITCHING | | | | | | | | | | | | | | | | |
| | Tandem Switching Function Per MOU | | | | | 0.0009778bk | | | | | | | | | | |
| | Multiple Tandem Switching, per MOU (applies to intial tandem only) | | | | | 0.0009778 | | | | | | | | | | |
| | Tandem Intermediary Charge, per MOU* | | | | | 0.0025 | | | | | | | | | | |
| * This charge is applicable only to transit traffic and is applied in addition to applicable switching and/or interconnection charges. | | | | | | | | | | | | | | | | |
| TRUNK CHARGE | | | | | | | | | | | | | | | | |
| | Installation Trunk Side Service - per DS0 | | | OHD | TPP6X | | 21.59bk | 8.09bk | | | | | | | | |
| | Installation Trunk Side Service - per DS0 | | | OHD | TPP9X | | 21.59bk | 8.09bk | | | | | | | | |
| | Dedicated End Office Trunk Port Service-per DS0** | | | OHD | TDEOP | 0.00 | | | | | | | | | | |
| | Dedicated End Office Trunk Port Service-per DS1** | | | OH1 OH1MS | TDE1P | 0.00 | | | | | | | | | | |
| | Dedicated Tandem Trunk Port Service-per DS0** | | | OHD | TDWOP | 0.00 | | | | | | | | | | |
| | Dedicated Tandem Trunk Port Service-per DS1** | | | OH1 OH1MS | TDW1P | 0.00 | | | | | | | | | | |
| ** This rate element is recovered on a per MOU basis and is included in the End Office Switching and Tandem Switching, per MOU rate elements | | | | | | | | | | | | | | | | |
| COMMON TRANSPORT (Shared) | | | | | | | | | | | | | | | | |
| | Common Transport - Per Mile, Per MOU | | | | | 0.0000064bk | | | | | | | | | | |
| | Common Transport - Facilities Termination Per MOU | | | | | 0.0003871bk | | | | | | | | | | |
| LOCAL INTERCONNECTION (DEDICATED TRANSPORT) | | | | | | | | | | | | | | | | |
| INTEROFFICE CHANNEL - DEDICATED TRANSPORT | | | | | | | | | | | | | | | | |
| | Interoffice Channel - Dedicated Transport - 2-Wire Voice Grade - Per Mile per month | | | OHM | 1L5NF | 0.0174bk | | | | | | | | | | |
| | Interoffice Channel - Dedicated Transport- 2- Wire Voice Grade - Facility Termination per month | | | OHM | 1L5NF | 18.58bk | 55.39bk | 17.37bk | 27.96bk | 3.51bk | | | | | | |
| | Interoffice Channel - Dedicated Transport - 56 kbps - per mile per month | | | OHM | 1L5NK | 0.0174bk | | | | | | | | | | |
| | Interoffice Channel - Dedicated Transport - 56 kbps - Facility Termination per month | | | OHM | 1L5NK | 17.98bk | 55.39bk | 17.37bk | 27.96bk | 3.51bk | | | | | | |
| | Interoffice Channel - Dedicated Transport - 64 kbps - per mile per month | | | OHM | 1L5NK | 0.0174bk | | | | | | | | | | |
| | Interoffice Channel - Dedicated Transport - 64 kbps - Facility Termination per month | | | OHM | 1L5NK | 17.98bk | 55.39bk | 17.37bk | 27.96bk | 3.51bk | | | | | | |
| | Interoffice Channel - Dedicated Channel - DS1 - Per Mile per month | | | OH1, OH1MS | 1L5NL | 0.3562bk | | | | | | | | | | |
| | Interoffice Channel - Dedicated Tranport - DS1 - Facility Termination per month | | | OH1, OH1MS | 1L5NL | 77.86bk | 112.4bk | 76.27bk | 19.55bk | 14.99bk | | | | | | |
| | Interoffice Channel - Dedicated Transport - DS3 - Per Mile per month | | | OH3, OH3MS | 1L5NM | 2.34bk | | | | | | | | | | |
| | Interoffice Channel - Dedicated Transport - DS3 - Facility Termination per month | | | OH3, OH3MS | 1L5NM | 848.99bk | 395.29bk | 176.56bk | 109.04bk | 105.91bk | | | | | | |
| LOCAL CHANNEL - DEDICATED TRANSPORT | | | | | | | | | | | | | | | | |
| | Local Channel - Dedicated - 2-Wire Voice Grade per month | | | OHM | TEFV2 | 19.43bk | 199.33bk | 24.16bk | 54.81bk | 4.8bk | | | | | | |
| | Local Channel - Dedicated - 4-Wire Voice Grade per month | | | OHM | TEFV4 | 20.56bk | 201.53bk | 24.83bk | 55.52bk | 5.51bk | | | | | | |
| | Local Channel - Dedicated - DS1 per month | | | OH1 | TEFHG | 40.99bk | 277.35bk | 233.26bk | 33.18bk | 22.3bk | | | | | | |
| | Local Channel - Dedicated - DS3 Facility Termination per month | | | OH3 | TEFHJ | 611.3bk | 595.37bk | 304.5bk | 215.82bk | 151.15bk | | | | | | |
| LOCAL INTERCONNECTION MID-SPAN MEET | | | | | | | | | | | | | | | | |
| NOTE: If Access service ride Mid-Span Meet, one-half the tariffed service Local Channel rate is applicable. | | | | | | | | | | | | | | | | |
| | Local Channel - Dedicated - DS1 per month | | | OH1MS | TEFHG | 0.00 | 0.00 | | | | | | | | | |
| | Local Channel - Dedicated - DS3 per month | | | OH3MS | TEFHJ | 0.00 | 0.00 | | | | | | | | | |
| MULTIPLEXERS | | | | | | | | | | | | | | | | |
| | Channelization - DS1 to DS0 Channel System | | | OH1, OH1MS | SATN1 | 80.77bk | 141.87bk | 77.11bk | 44.47bk | 42.62bk | | | | | | |
| | DS3 to DS1 Channel System per month | | | OH3, OH3MS | SATNS | 222.98bk | 308.03bk | 108.47bk | 6.34bk | 4.23bk | | | | | | |
| | DS3 Interface Unit (DS1 COCI) per month | | | OH1, OH1MS | SATCO | 17.58bk | 6.07bk | 4.66bk | | | | | | | | |
| SIGNALING (CCS7) | | | | | | | | | | | | | | | | |

# Attachment 4

# Central Office Collocation

# CENTRAL OFFICE COLLOCATION
# TABLE OF CONTENTS

**1. Scope of Attachment**
- **1.1 BellSouth Premises**
- **1.2. Right to Occupy**
- **1.3. Space Allocation**
- **1.4. Transfer of Collocation Space**
- **1.5. Space Reclamation**
- **1.6. Use of Space**
- **1.7. Rates and Charges**
- **1.8. Due Dates**
- **1.9. Compliance**

**2. Space Availability Report**
- **2.1. Optional Space Availability Report**

**3. Collocation Options**
- **3.1. Cageless Collocation**
- **3.2. Caged Collocation**
- **3.3. Shared Caged Collocation**
- **3.4. Adjacent Collocation**
- **3.5. Direct Connect**
- **3.6. Co-Carrier Cross Connect**

**4. Occupancy**
- **4.1. Space Ready Notification**
- **4.2. Acceptance Walk Through**
- **4.3. Early Space Acceptance**
- **4.4. Termination of Occupancy**

**5. Use of Collocation Space**
- **5.1. Equipment Type**
- **5.2. Terminations**
- **5.3. Security Interest in Equipment**
- **5.4. No Marketing**
- **5.5. Equipment Identification**
- **5.6. Entrance Facilities**
- **5.7. Dual Entrance Facilities**
- **5.8. Shared Use**
- **5.9. Demarcation Point**
- **5.10. Equipment and Facilities**
- **5.11. BellSouth's Access to Collocation Space**

**CENTRAL OFFICE COLLOCATION**
**TABLE OF CONTENTS (Cont'd.)**

**5.12. Customer's Access**
**5.13. Interference or Impairment**
**5.14. Personalty and Its Removal**
**5.15. Alterations**
**5.16. Janitorial Service**

**6. Ordering and Preparation of Collocation Space**
**6.1. Initial Application**
**6.2. Subsequent Application**
**6.3. Space Preferences**
**6.4. Space Availability Notification**
**6.5. Denial of Application**
**6.6. Petition for Waiver**
**6.7. Waiting List**
**6.8. Public Notification**
**6.9. Application Response**
**6.10. Application Modifications**
**6.11. Bona Fide Firm Order**

**7. Construction and Provisioning**
**7.1 Construction and Provisioning Intervals**
**7.2. Joint Planning**
**7.3. Permits**
**7.4. Circuit Facility Assignments**
**7.5. Use of BellSouth Certified Supplier**
**7.6 Alarms and Monitoring**
**7.7. Virtual to Physical Relocation**
**7.8 Virtual to Physical Conversion (In Place)**
**7.9. Cancellation**
**7.10. Licenses**
**7.11. Environmental Compliance**

**8. Rates and Charges**
**8.1. Rates**
**8.2. Application Fees**
**8.3. Recurring Charges**
**8.4. Non-Recurring Charges**
**8.5. Space Preparation**
**8.6. Floor Space**
**8.7 Power**

**CENTRAL OFFICE COLLOCATION**
**TABLE OF CONTENTS (Cont'd.)**

**8.8 Cable Installation**
**8.9 Cable Records**
**8.10 Security Escort**
**8.11 Other**
**9. Insurance**

**10. Mechanics Lien**

**11. Inspections**

**12. Security and Safety Requirements**

**13. Destruction of Collocation Space**

**14. Eminent Domain**

**15. Nonexclusivity**

**EXHIBIT A ENVIRONMENTAL AND SAFETY PRINCIPLES**
**EXHIBIT B RATES**

**BELLSOUTH**

**CENTRAL OFFICE COLLOCATION**

**1. Scope of Attachment**

1.1 BellSouth Premises. The rates, terms, and conditions contained within this Attachment shall only apply when Comcast Phone is physically collocated as a sole occupant or as a Host within a BellSouth Premises pursuant to this Attachment. BellSouth Premises, as defined in this Attachment, includes BellSouth Central Offices and Serving Wire Centers (hereinafter "BellSouth Premises"). This Attachment is applicable to BellSouth Premises owned or leased by BellSouth. If the BellSouth Premises occupied by BellSouth is leased by BellSouth from a third party or otherwise controlled by a third party, special considerations and/or intervals may apply in addition to the terms and conditions contained in this Attachment.

1.2 Right to Occupy. BellSouth shall offer to Comcast Phone collocation on rates, terms, and conditions that are just, reasonable, non-discriminatory and consistent with the rules of the FCC. Subject to the rates, terms and conditions of this Attachment, where space is available and it is technically feasible, BellSouth will allow Comcast Phone to occupy a certain area designated by BellSouth within a BellSouth Premises, or on BellSouth property upon which the BellSouth Premises is located, of a size which is specified by Comcast Phone and agreed to by BellSouth (hereinafter "Collocation Space"). The necessary rates, terms and conditions for a premises as defined by the FCC, other than BellSouth Premises, shall be negotiated upon reasonable request for collocation at such premises.

1.2.1 Neither BellSouth nor any of BellSouth's affiliates may reserve space for future use on more preferential terms than those set forth in this Attachment.

1.2.1.1 In all states other than Florida, the size specified by Comcast Phone may contemplate a request for space sufficient to accommodate Comcast Phone's growth within a twenty-four (24) month period.

1.2.1.2 In the state of Florida, the size specified by Comcast Phone may contemplate a request for space sufficient to accommodate Comcast Phone's growth within an eighteen (18) month period.

1.3 Space Allocation. BellSouth shall assign Comcast Phone Collocation Space that utilizes existing infrastructure (e.g., heating, ventilation, air conditioning (HVAC), lighting and available power), if such space is available for collocation. Otherwise, BellSouth shall attempt to accommodate Comcast Phone's requested space preferences, if any, including the provision of contiguous space for any subsequent request for collocation. In allocating Collocation Space, BellSouth shall not materially

increase Comcast Phone's cost or materially delay Comcast Phone's occupation and use of the Collocation Space, assign Collocation Space that will impair the quality of service or otherwise limit the service Comcast Phone wishes to offer, reduce unreasonably the total space available for physical collocation or preclude reasonable physical collocation within the BellSouth Premises. Space shall not be available for collocation if it is: (a) physically occupied by non-obsolete equipment; (b) assigned to another collocated telecommunications carrier; (c) used to provide physical access to occupied space; (d) used to enable technicians to work on equipment located within occupied space; (e) properly reserved for future use, either by BellSouth or another collocated telecommunications carrier; or (f) essential for the administration and proper functioning of the BellSouth Premises. BellSouth may segregate Collocation Space and require separate entrances for collocated telecommunications carriers to access their Collocation Space, pursuant to FCC Rules.

1.4 Transfer of Collocation Space. Comcast Phone shall be allowed to transfer Collocation Space to another CLEC under the following conditions: (1) the central office is not at or near space exhaustion; (2) the transfer of space shall be contingent upon BellSouth's approval, which will not be unreasonably withheld; (3) Comcast Phone has no unpaid, undisputed collocation charges; and (4) the transfer of the Collocation Space is in conjunction with Comcast Phone's sale of all, or substantially all, of the in-place collocation equipment to the same CLEC.

1.4.1 The responsibilities of Comcast Phone shall include: (1) submitting a letter of authorization to BellSouth for the transfer; (2) entering into a transfer agreement with BellSouth and the acquiring CLEC; and (3) returning all Security Access Devices to BellSouth. The responsibilities of the acquiring CLEC shall include: (1) submitting an application to BellSouth for the transfer of the Collocation Space; (2) satisfying all requirements of its interconnection agreement with BellSouth; (3) submitting a letter to BellSouth for the assumption of services; and (4) entering into a transfer agreement with BellSouth and Comcast Phone.

1.4.2 In conjunction with a transfer of Collocation Space, any services associated with the Collocation Space shall be transferred pursuant to separately negotiated rates, terms and conditions.

1.5 Space Reclamation. In the event of space exhaust within a BellSouth Premises, BellSouth may include in its documentation for the Petition for Waiver filed with the Commission, any unutilized space in the BellSouth Premises. Comcast Phone will be responsible for the justification of unutilized space within its Collocation Space, if the Commission requires such justification.

1.5.1 BellSouth may reclaim unused Collocation Space when a BellSouth central office is at, or near, space exhaustion and Comcast Phone cannot demonstrate that Comcast Phone will utilize the Collocation Space within a reasonable time. In the event of

space exhaust or near exhaust within a BellSouth Premises, BellSouth will provide written notice to Comcast Phone requesting that Comcast Phone release non-utilized Collocation Space to BellSouth, when 100 percent of the Collocation Space in Comcast Phone's collocation arrangement is not being utilized.

Within twenty (20) days of receipt of written notification from BellSouth, Comcast Phone shall either: (1) return the non-utilized Collocation Space to BellSouth, in which case Comcast Phone shall be relieved of all obligations for charges associated with that portion of the Collocation Space applicable from the date the Collocation Space is returned to BellSouth; or (2) for all states, with the exception of Florida, provide BellSouth with information demonstrating that the Collocation Space will be utilized within twenty-four (24) months from the date Comcast Phone accepted the Collocation Space (Acceptance Date) from BellSouth. For Florida, Comcast Phone shall provide information to BellSouth demonstrating that the Collocation Space will be utilized within eighteen (18) months from the Acceptance Date.

Disputes concerning BellSouth's claim of central office space exhaust, or near exhaust, or Comcast Phone's refusal to return requested Collocation Space should be resolved by BellSouth and Comcast Phone pursuant to the Dispute Resolution language contained in this Agreement.

1.6 Use of Space. Comcast Phone shall use the Collocation Space for the purpose of installing, maintaining and operating Comcast Phone's equipment (which may include testing and monitoring equipment) necessary for interconnection with BellSouth's services/facilities or for accessing BellSouth's unbundled network elements for the provision of telecommunications services, as specifically set forth in this Agreement. The Collocation Space assigned to Comcast Phone may not be used for any purposes other than as specifically described herein or in any amendment hereto.

1.7 Rates and Charges. Comcast Phone agrees to pay the rates and charges identified in Exhibit B attached hereto.

1.8 Due Dates. If any due date contained in this Attachment falls on a weekend or a national holiday, then the due date will be the next business day thereafter. For intervals of ten (10) days or less, national holidays will be excluded. For purposes of this Attachment, national holidays include the following: New Year's Day, Martin Luther King, Jr. Day, President's Day (Washington's Birthday), Memorial Day, Independence Day, Labor Day, Columbus Day, Veteran's Day, Thanksgiving Day, and Christmas Day.

1.9 Compliance. Subject to Section 24 of the General Terms and Conditions of this Agreement, the Parties agree to comply with all applicable federal, state, county, local and administrative laws, rules, ordinances, regulations and codes in the performance of their obligations hereunder.

## 2. Optional Space Availability Report

2.1 Upon request from Comcast Phone and at Comcast Phone's expense, BellSouth will provide a written report (Space Availability Report) describing in detail the space that is currently available for collocation at a particular BellSouth Premises. This report will include the amount of Collocation Space available at the BellSouth Premises requested, the number of collocators present at the BellSouth Premises, any modifications in the use of the space since the last report on the BellSouth Premises requested and the measures BellSouth is taking to make additional space available for collocation arrangements. A Space Availability Report does not reserve space at the BellSouth Premises for which the Space Availability Report was requested by Comcast Phone.

2.1.1 The request from Comcast Phone for a Space Availability Report must be in writing and include the BellSouth Premises street address, as identified in the Local Exchange Routing Guide (LERG), and the Common Language Location Identification (CLLI) code for the BellSouth Premises requested. CLLI code information is located in the National Exchange Carrier Association (NECA) Tariff FCC No. 4.

2.1.2 BellSouth will respond to a request for a Space Availability Report for a particular BellSouth Premises within ten (10) days of the receipt of such request. BellSouth will make commercially reasonable efforts to respond in ten (10) days to a Space Availability Report request when the request includes from two (2) to five (5) BellSouth Premises within the same state. The response time for Space Availability Report requests of more than five (5) BellSouth Premises, whether the request is for the same state or for two or more states within the BellSouth Region, shall be negotiated between the Parties. If BellSouth cannot meet the ten (10) day response time, BellSouth shall notify Comcast Phone and inform Comcast Phone of the timeframe under which it can respond.

## 3. Collocation Options

3.1 Cageless Collocation. BellSouth shall allow Comcast Phone to collocate Comcast Phone's equipment and facilities without requiring the construction of a cage or similar structure. BellSouth shall allow Comcast Phone to have direct access to Comcast Phone's equipment and facilities in accordance with Section 5.12. BellSouth shall make cageless collocation available in single bay increments. Except where Comcast Phone's equipment requires special technical considerations (e.g., special cable racking or isolated ground plane), BellSouth shall assign cageless Collocation Space in conventional equipment rack lineups where feasible. For equipment requiring special technical considerations, Comcast Phone must provide the equipment layout, including spatial dimensions for such equipment pursuant to generic requirements contained in Telcordia GR-63-Core, and shall be responsible for compliance with all special technical requirements associated with such equipment.

3.2 Caged Collocation. BellSouth will make caged Collocation Space available in fifty (50) square foot increments. At Comcast Phone's option and expense, Comcast Phone will arrange with a Supplier certified by BellSouth (BellSouth Certified Supplier) to construct a collocation arrangement enclosure in accordance with BellSouth's specifications for a wire mesh enclosure prior to starting equipment installation. Where local building codes require enclosure specifications more stringent than BellSouth's wire mesh enclosure specifications, Comcast Phone and Comcast Phone's BellSouth Certified Supplier must comply with the more stringent local building code requirements. Comcast Phone's BellSouth Certified Supplier shall be responsible for filing and obtaining any and all necessary permits and/or licenses for such construction. BellSouth or BellSouth's designated agent or contractor shall provide, at Comcast Phone's expense, documentation, which may include existing building architectural drawings, enclosure drawings, specifications, etc., necessary for Comcast Phone's BellSouth Certified Supplier to obtain all necessary permits and/or other licenses. Comcast Phone's BellSouth Certified Supplier shall bill Comcast Phone directly for all work performed for Comcast Phone. BellSouth shall have no liability for, nor responsibility to pay, such charges imposed by Comcast Phone's BellSouth Certified Supplier. Comcast Phone must provide the local BellSouth Central Office Building Contact with two (2) Access Keys that will allow entry into the locked enclosure. Except in the case of an emergency, BellSouth will not access Comcast Phone's locked enclosure prior to notifying Comcast Phone at least forty-eight (48) hours or two (2) business days, whichever is greater, before access to Comcast Phone's Collocation Space is required. Upon request, BellSouth shall construct the enclosure for Comcast Phone.

3.2.1 In the event Comcast Phone's BellSouth Certified Supplier will construct the collocation arrangement enclosure, BellSouth may elect to review Comcast Phone's plans and specifications, prior to allowing the construction to start, to ensure compliance with BellSouth's wire mesh enclosure specifications. BellSouth will notify Comcast Phone of its desire to conduct this review in BellSouth's Application Response, as defined herein, to Comcast Phone's Initial Application. If Comcast Phone's Initial Application does not indicate its desire to construct its own enclosure and Comcast Phone subsequently decides to construct its own enclosure prior to BellSouth's Application Response, then Comcast Phone will resubmit its Initial Application, indicating its desire to construct its own enclosure. If Comcast Phone subsequently decides to construct its own enclosure after the bona fide firm order (hereinafter "BFFO") has been accepted by BellSouth, Comcast Phone will submit a Subsequent Application, as defined in Section 6.2 of this Attachment. If BellSouth elects to review Comcast Phone's plans and specifications, then BellSouth will provide notification to Comcast Phone within ten (10) days after the Initial Application BFFO date or, if a Subsequent Application is submitted as set forth in the preceding sentence, then the Subsequent Application BFFO date. BellSouth shall complete its review within fifteen (15) days after BellSouth's receipt of Comcast Phone's plans and

specifications. Regardless of whether or not BellSouth elects to review Comcast Phone's plans and specifications, BellSouth reserves the right to inspect the enclosure after construction has been completed to ensure that it is constructed according to Comcast Phone's submitted plans and specifications and/or BellSouth's wire mesh enclosure specifications, as applicable. If BellSouth decides to inspect the constructed Collocation Space, BellSouth will complete its inspection within fifteen (15) days after receipt of Comcast Phone's written notification that the enclosure has been completed. Within seven (7) days after BellSouth has completed its inspection of Comcast Phone's caged Collocation Space BellSouth shall require Comcast Phone, at Comcast Phone's expense, to remove or correct any structure that does not meet Comcast Phone's plans and specifications or BellSouth's wire mesh enclosure specifications, as applicable.

3.3 Shared Caged Collocation. Comcast Phone may allow other telecommunications carriers to share Comcast Phone's caged Collocation Space, pursuant to the terms and conditions agreed to by Comcast Phone (Host) and the other telecommunications carriers (Guests) contained in this Section, except where the BellSouth Premises is located within a leased space and BellSouth is prohibited by said lease from offering such an option to Comcast Phone. BellSouth shall be notified in writing by Comcast Phone upon the execution of any agreement between the Host and its Guest(s) prior to the submission of an application. Further, such notification shall include the name of the Guest(s), the term of the agreement, and a certification by Comcast Phone that said agreement imposes upon the Guest(s) the same terms and conditions for Collocation Space as set forth in this Attachment between BellSouth and Comcast Phone. The term of the agreement between the Host and its Guest(s) shall not exceed the term of this Agreement between BellSouth and Comcast Phone.

3.3.1 Comcast Phone, as the Host, shall be the sole interface and responsible Party to BellSouth for the assessment and billing of rates and charges contained within this Attachment and for the purposes of ensuring that the safety and security requirements of this Attachment are fully complied with by the Guest(s), its employees and agents. BellSouth shall provide Comcast Phone with a pro-ration of the costs of the Collocation Space based on the number of collocators and the space used by each. There will be a minimum charge of one (1) bay/rack per Host/Guest. In addition to the above, for all states other than Florida, Comcast Phone shall be the responsible Party to BellSouth for the purpose of submitting applications for initial and additional equipment placement for the Guest(s). In Florida, the Guest(s) may submit its own Initial Application and Subsequent Applications for equipment placement using the Host's Access Carrier Name Abbreviation (ACNA). A separate Guest application shall result in the assessment of an Initial Application Fee or a Subsequent Application Fee, as set forth in Exhibit B, which will be billed to the Host on the date that BellSouth provides its written Application Response to the Guest(s) Bona Fide application.

3.3.2 Notwithstanding the foregoing, the Guest(s) may submit service orders directly to BellSouth to request the provisioning of interconnecting facilities between BellSouth and the Guest(s), the provisioning of services, and/or access to Network Elements. The bill for these interconnecting facilities, services and Network Elements will be charged to the Guest(s) pursuant to the applicable BellSouth Tariff or the Guest's Interconnection Agreement with BellSouth.

3.3.3 Comcast Phone shall indemnify and hold harmless BellSouth from any and all claims, actions, causes of action, of whatever kind or nature arising out of the presence of Comcast Phone's Guest(s) in the Collocation Space, except to the extent caused by BellSouth's sole negligence, gross negligence, or willful misconduct.

3.4 Adjacent Collocation. Subject to technical feasibility and space availability, BellSouth will permit an adjacent collocation arrangement (Adjacent Arrangement) on BellSouth Premises' property only when space within the requested BellSouth Premises is legitimately exhausted and where the Adjacent Arrangement does not interfere with access to existing or planned structures or facilities on the BellSouth Premises' property. An Adjacent Arrangement shall be constructed or procured by Comcast Phone or Comcast Phone's BellSouth Certified Supplier and must be in conformance with the provisions of BellSouth's design and construction specifications. Further, Comcast Phone shall construct, procure, maintain and operate said Adjacent Arrangement pursuant to all of the applicable rates, terms and conditions set forth in this Attachment.

3.4.1 If Comcast Phone requests Adjacent Collocation, pursuant to the conditions stated in 3.4 above, Comcast Phone must arrange with a BellSouth Certified Supplier to construct or procure the Adjacent Arrangement structure in accordance with BellSouth's specifications. BellSouth will provide the appropriate specifications upon request. Where local building codes require specifications more stringent than BellSouth's own specifications, Comcast Phone and Comcast Phone's BellSouth Certified Supplier shall comply with the more stringent local building code requirements. Comcast Phone's BellSouth Certified Supplier shall be responsible for filing and obtaining any and all necessary zoning, permits and/or licenses for such construction. Comcast Phone's BellSouth Certified Supplier shall bill Comcast Phone directly for all work performed for Comcast Phone to comply with this Attachment. BellSouth shall have no liability for, nor responsibility to pay, such charges imposed by Comcast Phone's BellSouth Certified Supplier. Comcast Phone must provide the local BellSouth Central Office Building Contact with two (2) cards, keys or other access devices used to gain entry into the locked enclosure. Except in the case of an emergency, BellSouth will not access Comcast Phone's locked enclosure prior to notifying Comcast Phone at least forty-eight (48) hours or two (2) business days, whichever is greater, before access to the Collocation Space is required.

3.4.2 Comcast Phone must submit its Adjacent Arrangement construction plans and specifications to BellSouth when it places its Firm Order. BellSouth shall review Comcast Phone's plans and specifications prior to the construction of an Adjacent Arrangement to ensure Comcast Phone's compliance with BellSouth's specifications. BellSouth shall complete its review within fifteen (15) days after receipt of the plans and specifications from Comcast Phone for the Adjacent Arrangement. BellSouth may inspect the Adjacent Arrangement during and after construction is completed to ensure that it is constructed according to Comcast Phone's submitted plans and specifications. If BellSouth decides to inspect the completed Adjacent Arrangement, BellSouth will complete its inspection within fifteen (15) days after receipt of Comcast Phone's written notification that the Adjacent Arrangement has been completed. Within seven (7) days after BellSouth has completed its inspection of Comcast Phone's Adjacent Arrangement, BellSouth shall require Comcast Phone, at Comcast Phone's expense, to remove or correct any structure that does not meet its submitted plans and specifications or BellSouth's specifications, as applicable.

3.4.3 Comcast Phone shall provide a concrete pad, the structure housing the Adjacent Arrangement, HVAC, lighting, and all of the facilities that are required to connect the structure (i.e., racking, conduits, etc.) to the BellSouth point of demarcation. At Comcast Phone's option, and where the local authority having jurisdiction permits, BellSouth shall provide an AC power source and access to physical Collocation services and facilities, subject to the same nondiscriminatory requirements as those applicable to any other physical Collocation arrangement. In Alabama and Louisiana, at Comcast Phone's request and expense, BellSouth will provide DC power to an Adjacent Collocation site where technically feasible, as that term has been defined by the FCC, and in accordance with applicable law. BellSouth will provide DC power in an Adjacent Arrangement provided that such provisioning can be done in compliance with the National Electric Code (NEC), all safety and building codes, and any local codes, such as, but not limited to, local zoning codes, and upon completion of negotiations between the Parties on the applicable rates and provisioning intervals. Comcast Phone will pay for any and all DC power construction and provisioning costs to an Adjacent Arrangement through individual case basis (ICB) pricing that must be paid as follows: fifty percent (50%) before the DC installation work begins and fifty percent (50%) at completion of the DC installation work to the Adjacent Arrangement. Comcast Phone's BellSouth Certified Supplier shall be responsible, at Comcast Phone's sole expense, for filing the required documentation to obtain any and all necessary permits and/or licenses for an Adjacent Arrangement. BellSouth shall allow Shared Caged Collocation within an Adjacent Arrangement, pursuant to the terms and conditions set forth in Section 3.3 above.

3.5 Direct Connect. BellSouth will permit Comcast Phone to directly interconnect between its own physical/virtual Collocation Spaces within the same BellSouth central office (Direct Connect). Comcast Phone shall contract with a BellSouth Certified Supplier to place the Direct Connect, which shall be provisioned using facilities owned

by Comcast Phone. A Direct Connect shall utilize BellSouth common cable support structure. There will be a recurring charge per linear foot, per cable, of the actual common cable support structure used by Comcast Phone to provision the Direct Connect between its physical/virtual Collocation Spaces. In those instances where Comcast Phone's physical/virtual Collocation Spaces are contiguous in the central office, Comcast Phone will have the option of using Comcast Phone's own technicians to deploy the Direct Connect using either electrical or optical facilities between its Collocation Spaces by constructing its own dedicated cable support structure. Comcast Phone will deploy such electrical or optical connections directly between its own equipment without being routed through BellSouth's equipment or common cable support structure. Comcast Phone may not self-provision a Direct Connect on any BellSouth distribution frame, POT (Point of Termination) Bay, DSX (Digital System Cross-Connect) panel or LGX (Light Guide Cross-Connect) panel. Comcast Phone is solely responsible for ensuring the integrity of the signal.

3.5.1 To place an order for a Direct Connect, Comcast Phone must submit an Initial Application or Subsequent Application to BellSouth. If no modification to the Collocation Space is requested other than the placement of a Direct Connect, the Co-Carrier Cross Connect/Direct Connect Application Fee for Direct Connect, as defined in Exhibit B, will apply. If other modifications are requested, in addition to the placement of a Direct Connect, either an Initial Application Fee or a Subsequent Application Fee will apply, pursuant to Section 6.2 of this Attachment. BellSouth will bill this nonrecurring charge on the date that BellSouth provides an Application Response to Comcast Phone.

3.6 Co-Carrier Cross Connect. A Co-Carrier Cross Connect (CCXC) is a cross connection between Comcast Phone and another collocated telecommunications carrier, other than BellSouth, in the same BellSouth Premises. Where technically feasible, BellSouth will permit Comcast Phone to interconnect between its Collocation Space(s) and the physical/virtual collocation space(s) of another collocated telecommunications carrier(s) within the same BellSouth Premises via a CCXC, pursuant to the FCC's Rules. The other collocated telecommunications carrier's agreement must also contain CCXC rates, terms and conditions before BellSouth will permit the provisioning of a CCXC between the two collocated carriers. The applicable BellSouth charges will be assessed to Comcast Phone upon Comcast Phone's request for the CCXC. Comcast Phone is prohibited from using the Collocation Space for the sole or primary purpose of cross-connecting to other collocated telecommunications carriers.

3.6.1 Comcast Phone must contract with a BellSouth Certified Supplier to place the CCXC. The CCXC shall be provisioned using facilities owned by Comcast Phone. Such cross-connections to other collocated telecommunications carriers may be made using either electrical or optical facilities. Comcast Phone shall be responsible for providing a letter of authorization (LOA), with the application, to BellSouth from the other

collocated telecommunications carrier to which it will be cross-connecting. The CCXC shall utilize BellSouth common cable support structure. There will be a recurring charge per linear foot, per cable, of the common cable support structure used by Comcast Phone to provision the CCXC to the other collocated telecommunications carrier. In those instances where Comcast Phone's equipment and the equipment of the other collocated telecommunications carrier are located in contiguous caged Collocation Space, Comcast Phone may use its own technicians to install the CCXC using either electrical or optical facilities between the equipment of both collocated telecommunications carriers by constructing a dedicated cable support structure between the two contiguous cages. Comcast Phone shall deploy such electrical or optical cross-connections directly between its own equipment and the equipment of the other collocated telecommunications carrier without being routed through BellSouth's equipment or, in the case of a CCXC provisioned between contiguous collocation spaces, common cable support structure. Comcast Phone shall not provision CCXC on any BellSouth distribution frame, POT Bay, DSX panel or LGX panel. Comcast Phone is solely responsible for ensuring the integrity of the signal.

3.6.2 To place an order for a CCXC, Comcast Phone must submit an application to BellSouth. If no modification to the Collocation Space is requested other than the placement of a CCXC, the Co-Carrier Cross Connect/Direct Connect Application Fee for a CCXC, as defined in Exhibit B, will apply. If other modifications are requested, in addition to the placement of a CCXC, either an Initial Application or a Subsequent Application Fee will apply, pursuant to Section 6.2 of this Attachment. BellSouth will bill this nonrecurring charge on the date that it provides an Application Response to Comcast Phone.

## 4. Occupancy

4.1 Space Ready Notification. BellSouth will notify Comcast Phone in writing when the Collocation Space is ready for occupancy (Space Ready Date).

4.2 Acceptance Walk Through. Comcast Phone will schedule and complete an acceptance walkthrough of new or additional provisioned Collocation Space with BellSouth within fifteen (15) days after the Space Ready Date. BellSouth will correct any identified deviations from Comcast Phone's original or jointly amended application within seven (7) days after the walkthrough, unless the Parties mutually agree upon a different time frame. BellSouth will then establish a new Space Ready Date. Another acceptance walkthrough will be scheduled and conducted within fifteen (15) days after the new Space Ready Date. This follow-up acceptance walkthrough will be limited to only those deviations identified in the initial walkthrough. If Comcast Phone completes its acceptance walkthrough within the fifteen (15) day interval associated with the applicable Space Ready Date, billing will begin upon the date of Comcast Phone's acceptance of the Collocation Space (Space Acceptance Date). In the event Comcast Phone fails to complete an acceptance walkthrough within the fifteen (15)

day interval associated with the applicable Space Ready Date, the Collocation Space shall be deemed accepted by Comcast Phone on the Space Ready Date and billing will commence from that date.

4.3 Early Space Acceptance. If Comcast Phone decides to occupy the Collocation Space prior to the Space Ready Date, the date Comcast Phone occupies the space is deemed the Space Acceptance Date and billing will begin from that date. Comcast Phone must notify BellSouth in writing that its collocation equipment installation is complete. Comcast Phone's collocation equipment installation is complete, which is when Comcast Phone's equipment has been cross-connected to BellSouth's network for the purpose of provisioning telecommunication services to Comcast Phone's customers. BellSouth may, at its discretion, refuse to accept any orders for cross-connects until it has received such notice from Comcast Phone.

4.4 Termination of Occupancy. In addition to any other provisions addressing termination of occupancy in this Agreement, Comcast Phone may terminate its occupancy of a particular Collocation Space by submitting a Subsequent Application requesting termination of occupancy for such Collocation Space. Such termination shall be effective upon BellSouth's acceptance of the Space Relinquishment Form. Billing for monthly recurring charges will cease on the date that Comcast Phone and BellSouth conduct an inspection of the terminated space and jointly sign off on the Space Relinquishment Form or on the date that Comcast Phone signs off on the Space Relinquishment Form and sends this form to BellSouth, provided no discrepancies are found during BellSouth's subsequent inspection of the terminated space. If the subsequent inspection by BellSouth reveals any discrepancies, billing will cease on the date that BellSouth and Comcast Phone jointly conduct an inspection, confirming that Comcast Phone has corrected all of the noted discrepancies identified by BellSouth. A Subsequent Application Fee will not apply for the termination of occupancy; however, specific disconnect fees may apply to the services terminating to such Collocation Space. The particular disconnect fees that would apply in each state are contained in Exhibit B of this Attachment. BellSouth may terminate Comcast Phone's right to occupy Collocation Space in the event Comcast Phone fails to comply with any provision of this Agreement, including payment of the applicable fees contained in Exhibit B of this Attachment, for such Collocation Space.

4.4.1 Upon termination of occupancy, Comcast Phone, at its sole expense, shall remove its equipment and any other property owned, leased or controlled by Comcast Phone from the Collocation Space. Comcast Phone shall have thirty (30) days from the BFFO date ("Termination Date") to complete such removal, including the removal of all equipment and facilities of Comcast Phone's Guest(s), unless Comcast Phone's Guest(s) has assumed responsibility for the Collocation Space housing the Guest(s)'s equipment and executed the appropriate documentation required by BellSouth to transfer the Collocation Space to the Guest(s) prior to Comcast Phone's Termination Date.

4.4.2 Comcast Phone shall continue the payment of all monthly recurring charges to BellSouth until the date Comcast Phone, and if applicable Comcast Phone's Guest(s), has fully vacated the Collocation Space and the Space Relinquishment Form has been accepted by BellSouth. If Comcast Phone or Comcast Phone's Guest(s) fails to vacate the Collocation Space within thirty (30) days from the Termination Date BellSouth shall have the right to remove and dispose of the equipment and any other property of Comcast Phone or Comcast Phone's Guest(s), in any manner that BellSouth deems fit, at Comcast Phone's expense and with no liability whatsoever for Comcast Phone's property or Comcast Phone's Guest(s)'s property.

**4.4.3** Upon termination of Comcast Phone's right to occupy specific Collocation Space**,** pursuant to this Section 4.4**,** the Collocation Space will revert back to BellSouth's central office space inventory. Comcast Phone shall surrender the Collocation Space to BellSouth in the same condition as when it was first occupied by Comcast Phone, with the exception of ordinary wear and tear, unless otherwise agreed to by the Parties. Comcast Phone's BellSouth Certified Supplier shall be responsible for updating and making any necessary changes to BellSouth's records as required by BellSouth specifications including, but not limited to, BellSouth's Central Office Record Drawings and ERMA Records. Comcast Phone shall be responsible for the cost of removing any Comcast Phone constructed enclosure, as well as any supporting structures (e.g., racking, conduits, power cables, etc.), by the Termination Date and restoring the grounds to their original condition.

## 5. Use of Collocation Space

5.1 Equipment Type. BellSouth shall permit the collocation and use of any equipment necessary for interconnection to BellSouth's network and/or access to BellSouth's unbundled network elements in the provision of telecommunications services, as the term "necessary" is defined by FCC 47 C.F.R. Section 51.323 (b). The primary purpose and function of any equipment collocated in a BellSouth Premises must be for interconnection to BellSouth's network or access to BellSouth's unbundled network elements in the provision of telecommunications services. Equipment is necessary for interconnection if an inability to deploy that equipment would, as a practical, economical, or operational matter, preclude the requesting carrier from obtaining interconnection with BellSouth at a level equal in quality to that which BellSouth obtains within its own network or what BellSouth provides to any affiliate, subsidiary, or other party.

5.1.2 Examples of equipment that would not be considered necessary include, but are not limited to: traditional circuit switching equipment, equipment used exclusively for call-related databases, computer servers used exclusively for providing information services, operations support system (OSS) equipment used to support collocated telecommunications carrier network operations, equipment that generates customer orders, manages trouble tickets or inventory, or stores customer records in centralized

databases, etc. BellSouth will determine upon receipt of an application if the requested equipment is necessary based on the criteria established by the FCC. Multifunctional equipment placed on a BellSouth Premises must not place any greater relative burden on BellSouth's property than comparable single-function equipment. BellSouth reserves the right to allow the collocation of any equipment on a nondiscriminatory basis.

5.1.3 Such equipment must, at a minimum, meet the following Telcordia Network Equipment Building Systems (NEBS) General Equipment Requirements: Criteria Level 1 requirements as outlined in Telcordia Special Report SR-3580, Issue 1. Except where otherwise required by a Commission, BellSouth shall comply with the applicable FCC rules relating to denial of collocation equipment based on Comcast Phone's failure to comply with this Section.

5.2 Terminations. Comcast Phone shall not request more DS0, DS1, DS3 and/or optical terminations for a collocation arrangement than the total port or termination capacity of the equipment physically installed in the Collocation Space. The total capacity of the equipment collocated in the Collocation Space will include equipment contained in an application, as well as any equipment already placed in the Collocation Space. If full network termination capacity of the equipment being installed is not requested in the application submitted by Comcast Phone, additional network terminations for the installed equipment will require the submission of a Subsequent Application. In the event Comcast Phone submits an application for terminations that will exceed the total capacity of the collocated equipment, Comcast Phone will be informed of the discrepancy by BellSouth and required to submit a revision to the application.

5.3 Security Interest in Equipment. Commencing with the most current calendar quarter after the effective date of this Agreement, with an annual update thereafter, Comcast Phone will provide a report to ICS Collocation Product Management, Room 34A55, 675 W. Peachtree Street, Atlanta, Georgia 30375, listing any equipment in the Collocation Space (i) that was added during the calendar year to which such report pertains, and (ii) for which there is a UCC-1 lien holder or another entity that has a secured financial interest in such equipment (Secured Equipment). If no Secured Equipment has been installed within a given calendar year, no report shall be due hereunder in connection with such calendar year.

5.4 No Marketing. Comcast Phone shall not use the Collocation Space for marketing purposes, nor shall it place any identifying signs or markings outside the Collocation Space or on the grounds of the BellSouth Premises.

5.5 Equipment Identification. Comcast Phone shall place a plaque or affix other identification (e.g., stenciling or labeling) to each piece of Comcast Phone's equipment, including the appropriate emergency contacts with their corresponding telephone numbers, in order for BellSouth to properly identify Comcast Phone's

equipment in the case of an emergency. For caged Collocation Space, such identification must be placed on a plaque affixed to the outside of the caged enclosure.

5.6 Entrance Facilities. Comcast Phone may elect to place Comcast Phone-owned or Comcast Phone leased fiber entrance facilities into its Collocation Space. BellSouth will designate the point of interconnection in close proximity to the BellSouth Premises housing the Collocation Space, such as at an entrance manhole or a cable vault, which are physically accessible by both Parties. Comcast Phone will provide and place fiber cable in the entrance manhole of sufficient length to be pulled through conduit and into the splice location. Comcast Phone will provide and install a sufficient length of fire retardant riser cable, to which BellSouth will splice the entrance cable. The fire retardant riser cable will extend from the splice location to Comcast Phone's equipment in Comcast Phone's Collocation Space. In the event Comcast Phone utilizes a non-metallic, riser-type entrance facility, a splice will not be required. Comcast Phone must contact BellSouth for authorization and instruction prior to placing any entrance facility cable in an entrance manhole or cable vault. Comcast Phone is responsible for the maintenance of the entrance facilities.

5.6.1 Microwave Transmission Facilities. At Comcast Phone's request, BellSouth will accommodate, where technically feasible and space is available, a microwave entrance facility, pursuant to separately negotiated rates, terms and conditions.

5.6.2 Copper and Coaxial Cable Entrance Facilities. In Florida, Georgia and Tennessee, BellSouth shall permit Comcast Phone to use copper or coaxial cable entrance facilities, if approved by the Commission, but only in those rare instances where Comcast Phone demonstrates a necessity and entrance capacity is not at or near exhaust in a particular BellSouth Premises in which Comcast Phone's Collocation Space is located. Notwithstanding the foregoing, in the case of adjacent collocation, copper facilities may be used between the adjacent collocation arrangement and the central office demarcation point, unless BellSouth determines that limited space is available for the placement of these entrance facilities.

5.7 Dual Entrance Facilities. BellSouth will provide at least two interconnection points at each BellSouth Premises where at least two such interconnection points are available and capacity exists. Upon receipt of a request by Comcast Phone for dual entrance facilities to its physical Collocation Space, BellSouth shall provide Comcast Phone with information regarding BellSouth's capacity to accommodate the requested dual entrance facilities. If conduit in the serving manhole(s) is available and is not reserved for another purpose or for utilization within twelve (12) months of the receipt of an application for collocation, BellSouth will make the requested conduit space available for the installation of a second entrance facility to Comcast Phone's Collocation Space. The location of the serving manhole(s) will be determined at the sole discretion of BellSouth. Where dual entrance facilities are not available due to a lack of capacity,

BellSouth will provide this information to Comcast Phone in the Application Response.

5.8 Shared Use. Comcast Phone may utilize spare capacity on an existing telecommunications carrier's entrance facility for the purpose of obtaining an entrance facility to Comcast Phone's Collocation Space within the same BellSouth Premises.

5.8.1 BellSouth shall allow the splice, as long as the fiber is non-working dark fiber. Comcast Phone must arrange with BellSouth in accordance with BellSouth's Special Construction Procedures, RL93-11-030BT, and provide a LOA from the other telecommunications carrier authorizing BellSouth to perform the splice of the Comcast Phone-provided riser cable to the spare capacity on the other telecommunications carrier's entrance facility. If Comcast Phone desires to allow another telecommunications carrier to use its entrance facilities, the telecommunications carrier must arrange with BellSouth in accordance with BellSouth's Special Construction Procedures, RL93-11-030BT, and provide a LOA from Comcast Phone authorizing BellSouth to perform the splice of the telecommunications carrier's provided riser cable to the spare capacity on Comcast Phone's entrance facility.

5.9 Demarcation Point. BellSouth will designate the point(s) of demarcation between Comcast Phone's equipment and/or network facilities and BellSouth's network facilities. Each Party will be responsible for the maintenance and operation of all equipment/facilities on its side of the demarcation point. Comcast Phone shall be responsible for providing the necessary cabling and Comcast Phone's BellSouth Certified Supplier shall be responsible for installing and properly labeling/stenciling the common block and any necessary cabling identified in Section 7 of this Attachment. Comcast Phone or its agent must perform all required maintenance to the equipment/facilities on its side of the demarcation point, pursuant to Section 5.10, following, and may self-provision cross-connects that may be required within its own Collocation Space to activate service requests.

5.9.1 In Tennessee, BellSouth will designate the point(s) of demarcation between Comcast Phone's equipment and/or network facilities and BellSouth's network facilities. Each Party will be responsible for the maintenance and operation of all equipment/facilities on its side of the demarcation point. For connections to BellSouth's network, Comcast Phone may request that the demarcation point be a Point of Termination (POT) bay in a common area within the BellSouth Premises, which Comcast Phone shall be responsible for providing and Comcast Phone's BellSouth Certified Supplier shall be responsible for installing and properly labeling/stenciling. Comcast Phone's BellSouth Certified Supplier shall also be responsible for installing the necessary cabling between Comcast Phone's Collocation Space and the POT bay. Comcast Phone, its agent, or Comcast Phone's BellSouth Certified Supplier must perform all required maintenance to the equipment/network facilities on its side of the demarcation point and may self-provision cross-connects that it requires within its own Collocation

Space to activate service requests. If Comcast Phone desires to avoid the use of a POT bay or any other intermediary device as contemplated by the Tennessee Regulatory Authority, BellSouth shall negotiate alternative rates, terms and conditions for such requested demarcation point.

5.10 Equipment and Facilities. Comcast Phone, or if required by this Attachment, Comcast Phone's BellSouth Certified Supplier, is solely responsible for the design, engineering, installation, testing, provisioning, performance, monitoring, and maintenance/repair of the equipment and network facilities used by Comcast Phone, which must be performed in compliance with all applicable BellSouth specifications. Such equipment and network facilities may include, but are not limited to, cable(s), equipment, and point of termination connections. Comcast Phone and its designated BellSouth Certified Supplier must follow and comply with all BellSouth specifications outlined in the following BellSouth Technical Requirements: TR 73503, TR 73519, TR 73572, and TR 73564.

5.11 BellSouth's Access to Collocation Space. From time to time, BellSouth may require access to Comcast Phone's Collocation Space. BellSouth retains the right to access Comcast Phone's Collocation Space for the purpose of making BellSouth equipment and building modifications (e.g., installing, altering or removing racking, ducts, electrical wiring, HVAC, and cabling). In such cases, BellSouth will give notice to Comcast Phone at least forty-eight (48) hours before access to Comcast Phone's Collocation Space is required. Comcast Phone may elect to be present whenever BellSouth performs work in the Comcast Phone's Collocation Space. The Parties agree that Comcast Phone will not bear any of the expense associated with this type of work.

5.11.1 In the case of an emergency, BellSouth will provide oral notice of entry as soon as possible and, upon request, will provide subsequent written notice.

5.11.2 Comcast Phone must provide the local BellSouth Central Office Building Contact with two (2) Access Devices that will allow BellSouth entry into any enclosed and locked Collocation Space including, but not limited to, an Adjacent Arrangement, pursuant to the requirements contained in this Section.

5.12 Comcast Phone's Access. Pursuant to Section 12, Comcast Phone shall have access to its Collocation Space twenty-four (24) hours a day, seven (7) days a week. Comcast Phone agrees to provide the name and social security number, date of birth, or driver's license number of each employee, supplier, or agent of Comcast Phone or Comcast Phone's Guest(s) with Comcast Phone's written request for access keys or cards (Access Devices) for specific BellSouth Premises, prior to the issuance of said Access Devices, using Form RF-2906-C, the "CLEC and CLEC Certified Supplier Access Request and Acknowledgement" form. The appropriate key acknowledgement forms (the "Collocation Acknowledgement Sheet" for access cards and the "Key

Acknowledgement Form" for keys) must be signed by Comcast Phone and returned to BellSouth Access Management within fifteen (15) days of Comcast Phone's receipt of these forms. Failure to return these properly acknowledged forms will result in the subsequent access key or card requests being held by BellSouth until the proper acknowledgement documents have been received by BellSouth and reflect current information. Access Devices may not be duplicated under any circumstances. Comcast Phone agrees to be responsible for all Access Devices and for the return of all Access Devices in the possession of Comcast Phone's employees, suppliers, agents, or Guests after termination of the employment relationship, the contractual obligation with Comcast Phone ends, upon the termination of this Agreement, or upon the termination of occupancy of Collocation Space in a specific BellSouth Premises. Comcast Phone shall pay all applicable charges associated with lost or stolen Access Devices.

5.12.1 BellSouth will permit one (1) accompanied site visit, which will be limited to no more than one hour, to Comcast Phone's designated Collocation Space, after receipt of the BFFO, without charge to Comcast Phone. Comcast Phone must submit to BellSouth the completed Access Control Request Form for all employees, suppliers, agents or Guests requiring access to a BellSouth Premises at least thirty (30) days prior to the date Comcast Phone desires to gain access to the Collocation Space. In order to permit reasonable access during construction of the Collocation Space, Comcast Phone may submit a request for its one (1) free accompanied site visit to its designated Collocation Space at any time subsequent to BellSouth's receipt of the BFFO. In the event Comcast Phone desires access to its designated Collocation Space after the first accompanied free visit and Comcast Phone's access request form(s) has not been approved by BellSouth or Comcast Phone has not yet submitted an access request form to BellSouth, Comcast Phone shall be permitted to access the Collocation Space accompanied by a BellSouth security escort, at Comcast Phone's expense, which will be assessed pursuant to the Security Escort fees contained in Exhibit B. Comcast Phone must request that escorted access be provided by BellSouth to Comcast Phone's designated Collocation Space at least three (3) business days prior to the date such access is desired. A BellSouth security escort will be required whenever Comcast Phone or its approved agent or supplier requires access to the entrance manhole.

5.12.2 Lost or Stolen Access Devices. Comcast Phone shall immediately notify BellSouth in writing when any of its Access Devices have been lost or stolen. If it becomes necessary for BellSouth to re-key buildings or deactivate an Access Device as a result of a lost or stolen Access Device(s) or for failure of Comcast Phone's employees, suppliers, agents or Guest(s) to return an Access Device(s), Comcast Phone shall pay for the costs of re-keying the building or deactivating the Access Device(s).

5.13 Interference or Impairment. Notwithstanding any other provisions of this Attachment, Comcast Phone shall not use any product or service provided under this Agreement,

any other service related thereto or used in combination therewith, or place or use any equipment or facilities in any manner that 1) significantly degrades, interferes with or impairs service provided by BellSouth or any other entity or any person's use of its telecommunications services; 2) endangers or damages the equipment, facilities or any other property of BellSouth or any other entity or person; 3) compromises the privacy of any communications routed through the BellSouth Premises; or 4) creates an unreasonable risk of injury or death to any individual or to the public. If BellSouth reasonably determines that any equipment or facilities of Comcast Phone violates the provisions of this paragraph, BellSouth shall provide written notice to Comcast Phone, which shall direct Comcast Phone to cure the violation within forty-eight (48) hours of Comcast Phone's receipt of written notice or, if such cure is not feasible, at a minimum, to commence curative measures within twenty-four (24) hours and exercise reasonable diligence to complete such measures as soon as possible thereafter. After receipt of the notice, the Parties agree to consult immediately and, if necessary, to conduct an inspection of the Collocation Space.

5.13.1 Except in the case of the deployment of an advanced service which significantly degrades the performance of other advanced services or traditional voice band services, if Comcast Phone fails to cure the violation within forty-eight (48) hours or, if such cure is not possible, to commence curative action within twenty-four (24) hours and exercise reasonable diligence to complete such action as soon as possible, or if the violation is of a character that poses an immediate and substantial threat of damage to property or injury or death to any person, or any other significant degradation, interference or impairment of BellSouth's or another entity's service, then and only in that event, BellSouth may take such action as it deems necessary to eliminate such threat including, without limitation, the interruption of electrical power to Comcast Phone's equipment and/or facilities. BellSouth will endeavor, but is not required, to provide notice to Comcast Phone prior to the taking of such action and BellSouth shall have no liability to Comcast Phone for any damages arising from such action, except to the extent that such action by BellSouth constitutes willful misconduct.

5.13.2 For purposes of this Section, the term "significantly degrades" shall be defined as an action that noticeably impairs a service from a user's perspective. In the case of the deployment of an advanced service which significantly degrades the performance of other advanced services or traditional voice band services and Comcast Phone fails to cure the violation within forty-eight (48) hours, or if such cure is not possible, to commence curative action within twenty-four (24) hours and exercise reasonable diligence to complete such action as soon as possible, BellSouth will establish before the appropriate Commission that the technology deployed is causing the significant degradation. Any claims of network harm presented to Comcast Phone or, if subsequently necessary, the Commission must be provided by BellSouth with specific and verifiable information. When BellSouth demonstrates that a certain technology deployed by Comcast Phone is significantly degrading the performance of other

advanced services or traditional voice band services, Comcast Phone shall discontinue deployment of that technology and migrate its customers to other technologies that will not significantly degrade the performance of such services. Where the only degraded service itself is a known disturber, and the newly deployed technology satisfies at least one of the criteria for a presumption that it is acceptable for deployment, pursuant to 47 C.F.R. §51.230, the degraded service shall not prevail against the newly-deployed technology.

5.14 Personalty and Its Removal. Facilities and equipment placed by Comcast Phone in the Collocation Space shall not become a part of the Collocation Space, even if nailed, screwed or otherwise fastened to the Collocation Space, but shall retain their status as personal property and may be removed by Comcast Phone at any time. Any damage caused to the Collocation Space by Comcast Phone's employees, suppliers, agents, or Guests during the installation or removal of such property shall be promptly repaired by Comcast Phone at its sole expense. If Comcast Phone decides to remove equipment and/or facilities from its Collocation Space and the removal requires no physical work be performed by BellSouth and Comcast Phone's physical work includes, but is not limited to, power reduction, cross-connects, or tie pairs, BellSouth will bill Comcast Phone the Administrative Only Application Fee associated with the type of removal activity performed by Comcast Phone, as set forth in Exhibit B. This non-recurring fee will be billed on the date that BellSouth provides an Application Response to Comcast Phone.

5.15 Alterations. Under no condition shall Comcast Phone or any person acting on behalf of Comcast Phone make any rearrangement, modification, augment, improvement, addition, and/or other alteration which could affect in any way space, power, HVAC, and/or safety considerations to the Collocation Space or the BellSouth Premises, hereinafter referred to individually or collectively as "Alterations", without the express written consent of BellSouth, which shall not be unreasonably withheld. The cost of any such Alteration shall be paid by Comcast Phone. An Alteration shall require the submission of a Subsequent Application and will result in the assessment of the applicable application fee associated with the type of alteration requested, as set forth in Sections 6.2.1, and 7.1.4, which will be billed by BellSouth on the date that BellSouth provides Comcast Phone with an Application Response.

5.16 Janitorial Service. Comcast Phone shall be responsible for the general upkeep of its Collocation Space. Comcast Phone shall arrange directly with a BellSouth Certified Supplier for janitorial services applicable to caged Collocation Space. Upon request, BellSouth shall provide a list of such suppliers on a BellSouth Premises-specific basis.

## 6. Ordering and Preparation of Collocation Space

6.1 If any state or federal regulatory agency imposes intervals that are different from intervals set forth in this section, whether now in effect or that become effective after execution of this Agreement, those intervals shall supersede the requirements set forth

herein for that jurisdiction for all applications submitted for the first time after the effective date thereof.

6.2 Initial Application. For Comcast Phone's or Comcast Phone's Guest's(s') initial equipment placement, Comcast Phone shall input a physical Expanded Interconnection Application Document (Initial Application) for physical Collocation Space directly into BellSouth's electronic application (e.App) system for processing. The Initial Application is considered Bona Fide when it is complete and accurate, meaning that all of the required fields on the Initial Application are completed with the appropriate type of information. An Initial Application Fee, as set forth in Exhibit B, will apply to each Initial Application submitted by Comcast Phone and will be billed by BellSouth on the date BellSouth provides Comcast Phone with an Application Response.

6.2 Subsequent Application. In the event Comcast Phone or Comcast Phone's Guest(s) desires to modify its use of the Collocation Space after a BFFO, Comcast Phone shall complete an application that contains all of the detailed information associated with a requested Alteration of the Collocation Space, as defined in Section 5.15 of this Attachment (Subsequent Application). The Subsequent Application will be considered Bona Fide when it is complete and accurate, meaning that all of the required fields on the Subsequent Application have been completed with the appropriate type of information associated with the requested Alteration. BellSouth shall determine what modifications, if any, to the BellSouth Premises are required to accommodate the change(s) requested by Comcast Phone in the Subsequent Application. Such modifications to the BellSouth Premises may include, but are not limited to, floor loading changes, changes necessary to meet HVAC requirements, changes to power plant requirements, equipment additions, etc.

6.2.1 Subsequent Application Fees. The application fee paid by Comcast Phone for an Alteration shall be dependent upon the level of assessment needed to complete the Alteration requested. Where the Subsequent Application does not require provisioning or construction work, but requires BellSouth to perform an administrative activity, an Administrative Only Application Fee shall apply as set forth in Exhibit B. The Administrative Only Application Fee will apply to Subsequent Applications associated with a transfer of ownership of the Collocation Space, removal of equipment from the Collocation Space (where the removal requires no physical work to be performed by BellSouth), an Alteration made to a Bona Fide application by Comcast Phone prior to BellSouth's receipt of the BFFO, and a virtual-to-physical conversion (in place). The Co-Carrier Cross Connect/Direct Connect Application Fee will apply when Comcast Phone submits a Subsequent Application for a direct connection between its own physical and virtual Collocation Space(s) in the same BellSouth Premises or between its physical or virtual Collocation Space and that of another collocated telecommunications carrier within the same BellSouth Premises. The Power Reconfiguration Only Application Fee will apply when Comcast Phone submits a Subsequent Application that reflects only an upgrade or reduction in the

amount of power that BellSouth is currently providing to Comcast Phone's physical Collocation Space. The fee for a Subsequent Application, for which the Alteration requested has limited effect (e.g., requires limited assessment and sufficient cable support structure, HVAC, power and terminations are available), shall be the Subsequent Application Fee, as set forth in Exhibit B. The appropriate nonrecurring application fee will be billed on the date that BellSouth provides Comcast Phone with an Application Response.

6.3 Space Preferences. If Comcast Phone has previously requested and received a Space Availability Report for the BellSouth Premises, Comcast Phone may submit up to three (3) space preferences on its application by identifying the specific space identification numbers referenced on the Space Availability Report for the space it is requesting. In the event BellSouth cannot accommodate Comcast Phone's space preference(s), Comcast Phone may accept the space allocated by BellSouth or cancel its application and submit another application requesting additional space preferences for the same BellSouth Premises. This application will be treated as a new application and the appropriate application fee will apply. The application fee will be billed by BellSouth on the date that BellSouth provides Comcast Phone with an Application Response.

6.4 Space Availability Notification.

For all states except Florida and Tennessee, BellSouth will respond to an application within ten (10) days as to whether space is available or not available within the requested BellSouth Premises. In Florida and Tennessee, BellSouth will respond to an application within fifteen (15) days as to whether space is available or not available within a BellSouth Premises. BellSouth's e.App system will reflect when Comcast Phone's application is Bona Fide. If the application cannot be Bona Fide, BellSouth will identify what revisions are necessary for the application to become Bona Fide.

6.4.1 If the amount of space requested is not available, BellSouth will notify Comcast Phone of the amount of space that is available and no application fee will apply. When BellSouth's response includes an amount of space less than that requested by Comcast Phone or space that is configured differently, no application fee will apply. If Comcast Phone decides to accept the available space, Comcast Phone must resubmit its application to reflect the actual space available, including the configuration of the space, prior to submitting a BFFO. When Comcast Phone resubmits its application to accept the available space, BellSouth will bill Comcast Phone the appropriate application fee.

6.5 Denial of Application. If BellSouth notifies Comcast Phone that no space is available (Denial of Application), BellSouth will not assess an application fee to Comcast Phone. After notifying Comcast Phone that BellSouth has no available space in the requested BellSouth Premises, BellSouth will allow Comcast Phone, upon request, to tour the entire BellSouth Premises within ten (10) days of such Denial of Application.

In order to schedule this tour, BellSouth must receive the request for the tour of the BellSouth Premises within five (5) days of the Denial of Application.

6.6 Petition for Waiver. Upon Denial of Application, BellSouth will timely file a petition with the appropriate Commission pursuant to 47 U.S.C. § 251(c)(6). BellSouth shall provide to the Commission any information requested by that Commission. Such information shall include which space, if any, BellSouth or any of BellSouth's affiliates have reserved for future use and a detailed description of the specific future uses for which the space has been reserved. Subject to an appropriate nondisclosure agreement or provision, BellSouth shall permit Comcast Phone to inspect any floor plans or diagrams that BellSouth provides to the Commission.

6.7 Waiting List. On a first-come, first-served basis, which is governed by the date of receipt of an application or Letter of Intent, BellSouth will maintain a waiting list of requesting telecommunications carriers that have either received a Denial of Application or, where it is publicly known that a BellSouth Premises is out of space, have submitted a Letter of Intent to collocate in that BellSouth Premises. BellSouth will notify each telecommunications carrier on the waiting list that can be accommodated by the amount of space that becomes available, according to the position of the telecommunications carrier on said waiting list.

6.7.1 In Florida, on a first-come, first-served basis, which is governed by the date of receipt of an application or Letter of Intent, BellSouth will maintain a waiting list of requesting telecommunications carriers that have either received a Denial of Application or, where it is publicly known that a BellSouth Premises is out of space, have submitted a Letter of Intent to collocate in that BellSouth Premises. Sixty (60) days prior to space becoming available, if known, BellSouth will notify the Commission and the telecommunications carriers on the waiting list by mail when space will become available. If BellSouth does not know sixty (60) days in advance of when space will become available, BellSouth will notify the Commission and the telecommunications carriers on the waiting list within two (2) business days of the determination that space will become available. A telecommunications carrier that, upon denial of physical Collocation Space, requests virtual Collocation Space shall automatically be placed on the waiting list for physical Collocation Space that may become available in the future.

6.7.2 When physical Collocation Space becomes available, Comcast Phone must submit an updated, complete, and accurate application to BellSouth within thirty (30) days of notification by BellSouth that physical Collocation Space will be available in the requested BellSouth Premises previously out of space. If Comcast Phone has originally requested caged Collocation Space and cageless Collocation Space becomes available, Comcast Phone may refuse such space and notify BellSouth in writing, within the thirty (30) day timeframe referenced above, that Comcast Phone wishes to maintain its place on the waiting list for caged physical Collocation Space, without accepting the available cageless Collocation Space.

6.7.3 Comcast Phone may accept an amount of space less than what it originally requested by submitting an application as set forth above, and, upon request, may maintain its position on the waiting list for the remaining space that was initially requested. If Comcast Phone does not submit an application or notify BellSouth in writing within the thirty (30) day timeframe as described above in Section 6.7.2, BellSouth will offer the available space to the next telecommunications carrier on the waiting list and remove Comcast Phone from the waiting list. Upon request, BellSouth will advise Comcast Phone as to its position on the waiting list for a particular BellSouth Premises.

6.8 Public Notification. BellSouth will maintain on its Interconnection Services website, www.interconnection.bellsouth.com, a notification document that will indicate all BellSouth Premises that are without available space. BellSouth shall update such document within ten (10) days of the date that BellSouth becomes aware that insufficient space is available to accommodate physical Collocation. BellSouth will also post a document on its Interconnection Services website that contains a general notice when space becomes available in a BellSouth Premises previously on the space exhaust list.

6.9 Application Response.

6.9.1 In Alabama, Louisiana, Mississippi, and South Carolina, when space has been determined to be available for physical (caged or cageless) Collocation arrangements, BellSouth will provide an Application Response within twenty (20) days of receipt of a Bona Fide application. The Application Response will be a written response that includes sufficient information to enable Comcast Phone to place a Firm Order, which, at a minimum, will include the configuration of the space, the Cable Installation Fee, the Cable Records Fee, and any other applicable space preparation fees, as described in Section 8.

6.9.2 In Tennessee, within fifteen (15) days of receipt of a Bona Fide application, when space has been determined to be available or when a lesser amount of space than that requested is available, then with respect to the space available, BellSouth will provide an Application Response including sufficient information to enable Comcast Phone to place a Firm Order. The Application Response will include, at a minimum, the configuration of the space, the Cable Installation Fee, the Cable Records Fee, and any other applicable space preparation fees, as described in Section 8. When Comcast Phone submits ten (10) or more applications within ten (10) days, the initial fifteen (15) day response interval will increase by ten (10) days for every additional ten (10) applications or fraction thereof.

6.10 Application Modifications. If a modification or revision is made to any information in the Bona Fide application prior to a BFFO, with the exception of modifications to (1) Customer Information, (2) Contact Information or (3) Billing Contact Information, whether at the request of Comcast Phone or as necessitated by technical

considerations, the application shall be considered a new application and handled as a new application with respect to the response and provisioning intervals. BellSouth will charge Comcast Phone the appropriate application fee associated with the level of assessment performed by BellSouth, pursuant to Sections 6.1 and 6.2.

6.11 Bona Fide Firm Order.

6.11.1 Comcast Phone shall indicate its intent to proceed with a Collocation Space request in a BellSouth Premises by submitting a Bona Fide Firm Order (BFFO) to BellSouth. The BFFO must be received by BellSouth no later than thirty (30) days after BellSouth's Application Response to Comcast Phone's Bona Fide application or Comcast Phone's application will expire.

6.11.2 BellSouth will establish a Firm Order date based upon the date BellSouth is in receipt of Comcast Phone's BFFO. BellSouth will acknowledge the receipt of Comcast Phone's BFFO within seven (7) days of receipt, so that Comcast Phone will have positive confirmation that its BFFO has been received. BellSouth's response to a BFFO will include a Firm Order Confirmation, which contains the firm order date. No revisions may be made to a BFFO.

## 7. Construction and Provisioning

7.1 Construction and Provisioning Intervals.

7.1.1 In Florida and Tennessee, BellSouth will complete construction of physical Collocation Space as soon as possible within a maximum of ninety (90) days from receipt of a BFFO or as agreed to by the Parties. For virtual Collocation Space, BellSouth will complete construction as soon as possible within a maximum of sixty (60) days from receipt of a BFFO or as agreed to by the Parties. For Alterations requested to Collocation Space after the initial space has been completed, BellSouth will complete construction for Collocation Space as soon as possible within a maximum of forty-five (45) days from receipt of a BFFO or as agreed to by the Parties, as long as no additional space has been requested by Comcast Phone, If additional space has been requested by Comcast Phone, BellSouth will complete construction for the requested Collocation Space as soon as possible within a maximum of ninety (90) days from receipt of a BFFO for physical Collocation Space and forty five (45) days from receipt of a BFFO for virtual Collocation Space. If BellSouth does not believe that construction will be completed within the relevant provisioning interval and BellSouth and Comcast Phone cannot agree upon a completion date, within forty-five (45) days of receipt of the BFFO for an initial request, or within thirty (30) days of receipt of the BFFO for an Alteration, BellSouth may seek an extension from the Commission.

7.1.2 In Alabama, Georgia, Kentucky, Louisiana, Mississippi, North Carolina, and South Carolina, BellSouth will complete construction for caged physical Collocation Space

under ordinary conditions as soon as possible within a maximum of ninety (90) days from receipt of a BFFO or as agreed to by the Parties. BellSouth will complete construction for cageless physical Collocation Space under ordinary conditions as soon as possible within a maximum of sixty (60) days from receipt of a BFFO and ninety (90) days from receipt of a BFFO for extraordinary conditions, or as agreed to by the Parties. Ordinary conditions are defined as space available with only minor changes required to BellSouth's support systems. (Examples include, but are not limited to: minor modifications to HVAC, cabling and BellSouth's power plant.) Extraordinary conditions include, but may not be limited to: major BellSouth equipment rearrangements or additions; power plant additions or upgrades; major mechanical additions or upgrades; major upgrades for ADA compliance; environmental hazards or hazardous materials abatement; and arrangements for which equipment shipping intervals are extraordinary in length. The Parties may mutually agree to renegotiate an alternative provisioning interval for the Collocation Space requested or BellSouth may seek a waiver from the ordered interval, as set forth above, from the appropriate Commission, if BellSouth does not believe that construction will be completed within the relevant provisioning interval.

7.1.3 Records Only Change. When Comcast Phone adds equipment, that was originally included on Comcast Phone's Initial Application or a Subsequent Application, and the addition of this equipment requires no additional space preparation work or cable terminations on the part of BellSouth, then BellSouth will impose no additional charges or intervals.

7.1.4 In the states of Alabama, Georgia, Kentucky, Louisiana, Mississippi, North Carolina, and South Carolina, BellSouth will provide the reduced intervals outlined below to Comcast Phone, when Comcast Phone requests an Alteration specifically identified in Sections 7.1.4.1 through 7.1.4.9 as an "Augment. Except as otherwise set forth in Section 7.1.4.10 below, such Augment will require a Subsequent Application and will result in the assessment of the appropriate application fee associated with the type of Augment requested by Comcast Phone. BellSouth will assess the appropriate nonrecurring application fee set forth in Exhibit B on the date that it provides an Application Response to Comcast Phone.

7.1.4.1 Simple Augments will be completed within twenty (20) days after receipt of the BFFO for an:

- Extension of Existing AC Circuit Capacity within Arrangement where Sufficient Circuit Capacity is Available
- Fuse Change and/or Increase or Decrease -48V DC Power from Existing BellSouth BDFB

7.1.4.2 Minor Augments will be completed within forty-five (45) days after receipt of the BFFO for:

- 168 DS1 Terminations at the BellSouth Demarcation Frame (Databasing Only; Panels, Relay Racks and Overhead Racking Exist)
- 96 DS3 Terminations at the BellSouth Demarcation Frame (Databasing Only; Panels, Relay Racks and Overhead Racking Exist)
- 99 Fiber Terminations at the BellSouth Demarcation Frame (Databasing Only; Panels, Relay Racks and Overhead Racking Exist)
- Maximum of 2000 Service Ready DS0 Terminations at the BellSouth Demarcation Frame (Databasing Only; Panels, Relay Racks and Overhead Racking Exist)

7.1.4.3 Intermediate Augments will be completed within sixty (60) days after receipt of the BFFO for:

- 168 DS1s (Databasing and Installation of Termination Panels, Relay Racks or Additional Structure, as Required)
- 96 DS3s (Databasing and Installation of Termination Panels, Relay Racks or Additional Structure, as Required)
- 99 Fiber Terminations (Databasing and Installation of Termination Panels, Relay Racks or Additional Structure, as Required)
- 2000 DS0s (Databasing and Installation of Termination Panels, Relay Racks or Additional Structure, as Required)
- Installation of Cable Racking or Other Support Structures, as Required, to Support Co-Carrier Cross Connects (Adequate Floor or Ceiling Structural Capacity Exists and Support/Protection Structure for Fiber Patch Cord is Excluded)

7.1.4.4 Major Augments of physical Collocation Space will be completed within ninety (90) days after BFFO. This category includes all requests for additional Physical Collocation Space (caged or cageless).

7.1.4.5 Major Augments of virtual Collocation Space will be completed within seventy-five (75) days after BFFO. This category includes all requests for additional virtual Collocation Space.

7.1.4.6 If Comcast Phone submits an Augment that includes two Augment items from the same category in either Section 7.1.4.1, 7.1.4.2, or 7.1.4.3 above, the provisioning interval associated with the next highest Augment category will apply (e.g., if two items from the Minor Augment category are requested on the same request, then an interval of sixty (60) days from the receipt of the BFFO would apply, which is the interval associated with the Intermediate Augment category).

7.1.4.7 If Comcast Phone submits an Augment that includes three Augment items from the same category in either Section 7.1.4.1, 7.1.4.2, or 7.1.4.3 above, the Major Augment interval of ninety (90) days from the receipt of the BFFO would apply (e.g., if three items from the Simple Augment category are requested on the same request for a

physical Collocation arrangement, then an interval of ninety (90) days from the receipt of the BFFO would apply, which is the Major physical Augment interval; likewise if three items from the Simple Augment category are requested on the same request for a virtual Collocation arrangement, then an interval of seventy-five (75) days from the receipt of the BFFO would apply, which is the Major virtual Augment interval).

7.1.4.8 If Comcast Phone submits an Augment that includes one Augment item from two separate categories in Sections 7.1.4.1, 7.1.4.2 and 7.1.4.3 above, the Augment interval associated with the highest Augment category will apply (e.g., if an item from the Minor Augment category and an item from the Intermediate Augment category are requested on the same request, then an interval of sixty (60) days from the receipt of the BFFO would apply, which is the interval associated with the Intermediate Augment category).

7.1.4.9 All Augments not expressly included in the Simple, Minor, Intermediate or Major Augment categories, as outlined above, will be placed into the appropriate category as negotiated by Comcast Phone and BellSouth. If Comcast Phone and BellSouth are unable to determine the appropriate category through negotiation, then the appropriate Major Augment category, identified in Section 7.1.4.4 and Section 7.1.4.5, would apply based on whether the Augment is for Comcast Phone's physical or virtual Collocation Space.

7.1.4.10 Individual application fees associated with Simple, Minor and Intermediate Augments are contained in Exhibit B. If Comcast Phone requests multiple items from different Augment categories, BellSouth will bill Comcast Phone the Augment application fee, as identified in Exhibit B of this Attachment, associated with the higher Augment category only. The appropriate application fee will be assessed to Comcast Phone at the time BellSouth provides Comcast Phone with the Application Response. Comcast Phone will be assessed a Subsequent Application Fee for all Major Augments (Major Augments are defined above in Sections 7.1.4.4 and 7.1.4.5 for physical and virtual Collocation Space, respectively). The Subsequent Application Fee is also reflected in Exhibit B of this Attachment.

7.2 Joint Planning. Unless otherwise agreed to by the Parties, a joint planning meeting or other method of joint planning between BellSouth and Comcast Phone will commence within a maximum of twenty (20) days from BellSouth's receipt of a BFFO. At such meeting, the Parties will agree to the preliminary design of the Collocation Space and the equipment configuration requirements, as reflected in the application and affirmed in the BFFO. The Collocation Space completion time period will be provided to Comcast Phone during joint planning.

7.3 Permits. Each Party, its agent(s) or BellSouth Certified Supplier(s) will diligently pursue filing for the permits required for the scope of work to be performed by that Party, its agent(s) or BellSouth Certified Supplier(s) within ten (10) days of the completion of the finalized construction design and specifications.

7.4 Circuit Facility Assignments. Unless otherwise specified, BellSouth will provide Circuit Facility Assignments (CFAs) to Comcast Phone prior to the applicable provisioning interval set forth herein (Provisioning Interval) for those BellSouth Premises in which Comcast Phone has physical Collocation Space with no POT bay or with a grandfathered POT bay provided by BellSouth. BellSouth cannot provide CFAs to Comcast Phone prior to the Provisioning Interval for those BellSouth Premises in which Comcast Phone has physical Collocation Space with a POT bay provided by Comcast Phone or virtual Collocation Space, until Comcast Phone has provided BellSouth with the following information:

7.4.1 For physical Collocation Space with a Comcast Phone-provided POT bay, Comcast Phone shall provide BellSouth with a complete layout of the POT panels on an Equipment Inventory Update (EIU) form that shows the locations, speeds, etc.

7.4.2 For virtual Collocation Space, Comcast Phone shall provide BellSouth with a complete layout of Comcast Phone's equipment on an EIU form, that includes the locations of the low speed ports and the specific frame terminations to which the equipment will be wired by Comcast Phone's BellSouth Certified Supplier.

7.4.3 BellSouth cannot begin work on the CFAs until the complete and accurate EIU form has been received from Comcast Phone. If the EIU form is provided within ten (10) days prior to the ending date of the Provisioning Interval, then the CFAs will be made available by the ending date of the Provisioning Interval. If the EIU form is not received ten (10) days prior to the ending date of the Provisioning Interval, then the CFAs will be provided within ten (10) days of BellSouth's receipt of the EIU form.

7.4.4 BellSouth will bill Comcast Phone a nonrecurring charge, as set forth in Exhibit B, each time Comcast Phone requests a resend of its original CFA information for any reason other than a BellSouth error in the CFAs initially provided to Comcast Phone.

7.5 Use of BellSouth Certified Supplier. Comcast Phone shall select a supplier which has been approved as a BellSouth Certified Supplier to perform all engineering and installation work. Comcast Phone, if a BellSouth Certified Supplier, or Comcast Phone's BellSouth Certified Supplier must follow and comply with all of BellSouth's specifications and the following BellSouth Technical Requirements: TR 73503, TR 73519, TR 73572, and TR 73564. Unless the BellSouth Certified Supplier has met the requirements for all of the required work activities, Comcast Phone must use a different BellSouth Certified Supplier for the work activities associated with transmission equipment, switching equipment and power equipment. BellSouth shall provide Comcast Phone with a list of BellSouth Certified Suppliers, upon request. Comcast Phone, if a BellSouth Certified Supplier, or Comcast Phone's BellSouth Certified Supplier(s) shall be responsible for installing Comcast Phone's equipment and associated components, extending power cabling to the BellSouth power distribution frame, performing operational tests after installation is complete, and notifying BellSouth's equipment engineers and Comcast Phone upon successful completion of

the installation and any associated work. When a BellSouth Certified Supplier is used by Comcast Phone, the BellSouth Certified Supplier shall bill Comcast Phone directly for all work performed for Comcast Phone pursuant to this Attachment. BellSouth shall have no liability for, nor responsibility to pay, such charges imposed by Comcast Phone's BellSouth Certified Supplier. BellSouth shall make available its supplier certification program to Comcast Phone or any supplier proposed by Comcast Phone and will not unreasonably withhold certification. All work performed by or for Comcast Phone shall conform to generally accepted industry standards.

7.6 Alarms and Monitoring. BellSouth shall place environmental alarms in the BellSouth Premises for the protection of BellSouth equipment and facilities. Comcast Phone shall be responsible for the placement, monitoring and removal of environmental and equipment alarms used to service Comcast Phone's Collocation Space. Upon request, BellSouth will provide Comcast Phone with an applicable BellSouth tariffed service(s) to facilitate remote monitoring of collocated equipment by Comcast Phone. Both Parties shall use best efforts to notify the other of any verified environmental condition (e.g., temperature extremes or excess humidity) known to that Party.

7.7 Virtual to Physical Relocation. In the event physical Collocation Space was previously denied at a BellSouth Premises due to technical reasons or space limitations and physical Collocation Space has subsequently become available, Comcast Phone may relocate its existing virtual Collocation arrangement(s) to a physical Collocation arrangement(s) and pay the appropriate fees associated with the rearrangement or reconfiguration of the services being terminated into the virtual Collocation arrangement, as set forth in Exhibit B to this Attachment. If BellSouth knows when additional physical Collocation Space may become available at the BellSouth Premises requested by Comcast Phone, such information will be provided to Comcast Phone in BellSouth's written denial of physical Collocation Space. Comcast Phone must arrange with a BellSouth Certified Supplier for the relocation of equipment from a virtual Collocation Space to a physical Collocation Space and will bear the cost of such relocation, including the costs associated with moving the services from the virtual Collocation Space to the new physical Collocation Space.

7.7.1 In Alabama, BellSouth will complete a relocation of a virtual collocation arrangement to a cageless physical collocation arrangement within sixty (60) days from BellSouth's receipt of a BFFO and from a virtual collocation arrangement to a caged physical collocation arrangement within ninety (90) days from BellSouth's receipt of a BFFO.

7.8 Virtual to Physical Conversion (In-Place). Virtual collocation arrangements may be converted to "in-place" physical caged collocation arrangements if the potential conversion meets all of the following criteria: 1) there is no change in the amount of equipment or the configuration of the equipment that was in the virtual Collocation Space; 2) the conversion of the virtual collocation arrangement will not cause the equipment or the results of that conversion to be located in a space that BellSouth has reserved for its own future needs; and 3) any changes to the arrangement can be

accommodated by existing power, HVAC, and other requirements. Unless otherwise specified herein, BellSouth will complete virtual to physical Collocation Space conversions (in-place) within sixty (60) days from receipt of the BFFO. BellSouth will bill Comcast Phone an Administrative Only Application Fee, as set forth in Exhibit B, on the date BellSouth provides an Application Response to Comcast Phone.

7.8.1 In Alabama and Tennessee, BellSouth will complete virtual to physical conversions (in place) within thirty (30) days from receipt of the BFFO as long as the conversion meets all of the criteria specified above in Section 7.8.

7.9 Cancellation. Unless otherwise specified in this Attachment, if at any time prior to Space Acceptance, Comcast Phone cancels its order for Collocation Space (Cancellation), BellSouth will bill the applicable nonrecurring charge(s) for any and all work processes for which work has begun or been completed. In Florida, if Comcast Phone cancels its order for Collocation Space at any time prior to the Space Ready Date, no cancellation fee shall be assessed by BellSouth; however, Comcast Phone will be responsible for reimbursing BellSouth for any costs specifically incurred by BellSouth on behalf of Comcast Phone up to the date that the written notice of cancellation was received by BellSouth. In Georgia, if Comcast Phone cancels its order for Collocation Space at any time prior to space acceptance, BellSouth will bill Comcast Phone for all costs incurred prior to the date of Cancellation and for any costs incurred as a direct result of the Cancellation, not to exceed the total amount that would have been due had the Firm Order not been canceled.

7.10 Licenses. Comcast Phone, at its own expense, will be solely responsible for obtaining from governmental authorities, and any other appropriate agency, entity, or person, all rights, privileges, permits, licenses, and certificates necessary or required to operate as a provider of telecommunications services to the public or to build-out, equip and/or occupy Collocation Space in a BellSouth Premises.

7.11 Environmental Compliance. The Parties agree to utilize and adhere to the Environmental Hazard Guidelines identified in Exhibit A attached hereto.

## 8. Rates and Charges

8.1 Rates. Comcast Phone agrees to pay the rates and charges identified in Exhibit B attached hereto.

8.2 Application Fees. BellSouth shall assess any non-recurring application fees within thirty (30) days of the date that BellSouth provides an Application Response to Comcast Phone or on Comcast Phone's next scheduled monthly billing statement.

8.2.1 In Tennessee, the application fee for caged Collocation Space shall be the Application – Cost Planning Fee for both Initial Applications and Subsequent Applications placed by Comcast Phone. Likewise, for cageless Collocation Space, the same Cageless -

Application Fee applies for both Initial Applications and Subsequent Applications placed by Comcast Phone. BellSouth will bill the appropriate non-recurring application fee on the date that BellSouth provides an Application Response to Comcast Phone.

8.3 Recurring Charges. If Comcast Phone has met the applicable fifteen (15) day acceptance walk through interval specified in Section 4.2, billing for recurring charges will begin upon the Space Acceptance Date. In the event Comcast Phone fails to complete an acceptance walk through within the applicable fifteen (15) day interval, billing for recurring charges will commence on the Space Ready Date. If Comcast Phone occupies the space prior to the Space Ready Date, the date Comcast Phone occupies the space is deemed the Space Acceptance Date and billing for recurring charges will begin on that date. The billing for all applicable monthly recurring charges will begin in Comcast Phone 's next billing cycle and will include any prorated charges for the period from Comcast Phone's Space Acceptance Date or Space Ready Date, whichever is appropriate pursuant to Section 4.2, to the date the bill is issued by BellSouth.

8.3.1 Unless otherwise stated in Section 8.6 below, monthly recurring charges for -48V DC power will be assessed per fused amp, per month, based upon the total number of fused amps of power capacity requested by Comcast Phone on Comcast Phone's Initial Collocation Application and all Subsequent Collocation Applications, which may either increase or decrease the originally requested, and any subsequently augmented, number of fused amps of power capacity requested, consistent with Commission orders.

8.3.2 BellSouth shall have the right to inspect and inventory any DC power fuse installations at a BellSouth BDFB or DC power circuit installations at BellSouth's main power board for any Comcast Phone collocation arrangement, to verify that the total number of fused amps of power capacity installed by Comcast Phone's BellSouth Certified Supplier matches the number of fused amps of DC power capacity requested by Comcast Phone on Comcast Phone's Initial Application and all Subsequent Applications. If BellSouth determines that Comcast Phone's BellSouth Certified Supplier has installed more DC capacity than Comcast Phone requested on its Initial Application and all Subsequent Applications, BellSouth shall notify Comcast Phone in writing of such discrepancy and shall assess Comcast Phone for the additional DC power fuse/circuit capacity from the Space Acceptance Date or Space Ready Date, whichever is applicable pursuant to Section 8.3 above, for the most recent Initial Application or Subsequent Application, submitted for such collocation arrangement. BellSouth shall also revise Comcast Phone's recurring DC power charges, on a going-forward basis, to reflect the higher number of fused amps of power capacity available for the collocation arrangement.

8.4 Nonrecurring Charges. In Florida, unless specified otherwise herein, BellSouth shall assess nonrecurring charges, including all application fees, within thirty (30) days of the date that BellSouth provides an Application Response to Comcast Phone or on Comcast Phone's next scheduled monthly billing statement, if Comcast Phone's current month's billing cycle has already closed. Nonrecurring charges associated with the processing of the Firm Order for collocation space preparation (Firm Order Processing Fee) shall be billed by BellSouth within thirty (30) days of BellSouth's confirmation of Comcast Phone's BFFO or on Comcast Phone's next scheduled monthly billing statement.

8.5 Space Preparation. Space preparation fees consist of a nonrecurring charge for Firm Order Processing and monthly recurring charges for Central Office Modifications and Common Systems Modifications. For all states except Florida, Comcast Phone shall remit the payment of the non-recurring Firm Order Processing Fee coincident with the submission of Comcast Phone's BFFO. In Florida, the non-recurring Firm Order Processing Fee will be billed by BellSouth, pursuant to Section 8.4 above. The monthly recurring charge for Central Office Modifications will be assessed per arrangement, per square foot, for both caged and cageless physical Collocation Space. The monthly recurring charge for Common Systems Modifications will be assessed per arrangement, per square foot, for cageless physical Collocation Space and on a per cage basis for caged physical Collocation Space. These charges recover the costs associated with preparing the Collocation Space, which includes, but is not limited to, the following items: a survey, engineering of the Collocation Space, and design and modification costs for network, building and support systems.

8.6 Floor Space. The Floor Space Charge includes reasonable charges for lighting, HVAC, and other allocated expenses associated with maintenance of the BellSouth Premises; however, this charge does not include any expenses associated with AC or DC power supplied to Comcast Phone's Collocation Space for the operation of Comcast Phone's equipment.

For caged physical Collocation Space, Comcast Phone shall pay floor space charges based upon the number of square feet enclosed. The minimum size for caged Collocation Space is 50 square feet. Additional caged Collocation Space may be requested in increments of 50 square feet. For cageless Collocation Space, Comcast Phone shall pay floor space charges based upon the following floor space calculation: [(depth of the equipment lineup in which the rack is placed) + (0.5 x maintenance aisle depth) + (0.5 x wiring aisle depth)] x (width of rack and spacers). For purposes of this calculation, the depth of the equipment lineup shall consider the footprint of equipment racks plus any equipment overhang. BellSouth will assign cageless Collocation Space in conventional equipment rack lineups where feasible. In the event Comcast Phone's collocated equipment requires special cable racking, an isolated ground plane, or any other considerations and treatment which prevents placement within conventional

equipment rack lineups, Comcast Phone shall be required to request an amount of floor space sufficient to accommodate the total equipment arrangement.

8.7 Power. BellSouth shall make available –48 Volt (-48V) Direct Current (DC) power for Comcast Phone's Collocation Space at a BellSouth Battery Distribution Fuse Bay (BDFB). When obtaining DC power from a BellSouth BDFB, Comcast Phone's fuses and power cables (for the A & B feeds) must be engineered (sized), and installed by Comcast Phone's BellSouth Certified Supplier, in accordance with the number of fused amps of DC power requested by Comcast Phone on Comcast Phone's Initial Application and any Subsequent Applications. Comcast Phone is also responsible for contracting with a BellSouth Certified Supplier to run the power distribution feeder cable from the BellSouth BDFB to the equipment in Comcast Phone's Collocation Space. The BellSouth Certified Supplier contracted by Comcast Phone must provide BellSouth with a copy of the engineering power specifications prior to the day on which Comcast Phone's equipment becomes operational (hereinafter "Commencement Date"). BellSouth will provide the common power feeder cable support structure between the BellSouth BDFB and Comcast Phone's Collocation Space. Comcast Phone shall contract with a BellSouth Certified Supplier who shall be responsible for performing those power provisioning activities required to enable Comcast Phone's equipment to become operational, which may include, but are not limited to, the installation, removal or replacement of the following: dedicated power cable support structure within Comcast Phone's Collocation Space, power cable feeds, and terminations of the power cabling. Comcast Phone and Comcast Phone's BellSouth Certified Supplier shall comply with all applicable NEC, BellSouth TR73503, Telcordia and ANSI Standards that address power cabling, installation, and maintenance.

8.7.1 In Florida only, pursuant to technical feasibility, commercial availability, and safety limitations, BellSouth will permit Comcast Phone to request DC power in 5-amp increments from 5 amps up to 100 amps from the BellSouth BDFB. However, in accordance with industry standard fuse sizing, Comcast Phone may request that BellSouth provision DC power of 70 amps or greater directly from BellSouth's main power board. The industry standard fuse size (which is a circuit breaker on the main power board) available at a BellSouth main power board in all BellSouth Premises is a 225-amp circuit breaker.

8.7.2 BellSouth will revise Comcast Phone's recurring power charges, in accordance with Section 8.3 above, to reflect a power upgrade when Comcast Phone submits a Subsequent Application requesting an increase in the number of fused amps it is currently receiving from BellSouth for its Collocation Space. If Comcast Phone's existing fuses and power cables (for the A&B power feed) are not sufficient to support the additional number of fused amps requested, Comcast Phone's BellSouth Certified Supplier shall perform whatever activities are necessary, which may include the installation of new/additional fuses or power cables, to comply with the appropriate

NEC, BellSouth TR73503, Telcordia, and ANSI Standards, as well as the requirements noted above in Section 8.7 and 8.7.1. Comcast Phone's BellSouth Certified Supplier shall provide notification to BellSouth when these activities have been completed.

8.7.3 BellSouth will revise Comcast Phone's recurring power charges, in accordance with Section 8.3 above, to reflect a power reduction upon BellSouth's receipt of the Power Reduction Form from Comcast Phone, certifying the completion of the power reduction work, including the removal of any associated power cabling by Comcast Phone's BellSouth Certified Supplier. Notwithstanding the foregoing, if Comcast Phone's BellSouth Certified Supplier has not removed or, at BellSouth's discretion, cut the power cabling within thirty (30) days, the power reduction will not become effective until the cabling is removed or, at BellSouth's discretion, cut by Comcast Phone 's BellSouth Certified Supplier and Comcast Phone shall pay for the amount of power that had been requested prior to the power reduction request for the period up to the date the power cabling is actually removed.

8.7.4 If Comcast Phone requests an increase or a reduction in the amount of power that BellSouth is currently providing, Comcast Phone must submit a Subsequent Application. If no modification to the Collocation Space is requested other than the increase or reduction in power, the Power Reconfiguration Only Application Fee as set forth in Exhibit B will apply. If modifications are requested in addition to the increase or reduction of power, the Subsequent Application Fee will apply. BellSouth will bill this nonrecurring fee on the date that BellSouth provides an Application Response to Comcast Phone's Subsequent Application.

8.7.5 If Comcast Phone has existing power configurations currently served from the BellSouth main power board and requests that its power be reconfigured to connect to a BellSouth BDFB, in a specific central office, Comcast Phone must submit a Subsequent Application. BellSouth will respond to such application within seven (7) days and a Subsequent Application fee will apply for this reconfiguration to a BellSouth BDFB.

8.7.6 If Comcast Phone elects to install its own DC Power Plant, BellSouth shall provide Alternating Current (AC) power to feed Comcast Phone's DC Power Plant. Charges for AC power will be assessed on a per breaker ampere, per month basis, pursuant to the rates specified in Exhibit B. The AC power rates include recovery for the provision of commercial and standby AC power. When obtaining power from a BellSouth service panel, protection devices and power cables must be engineered (sized) and installed by Comcast Phone's BellSouth Certified Supplier, with the exception that BellSouth shall engineer and install protection devices and power cables for Adjacent Collocation. Comcast Phone's BellSouth Certified Supplier must provide a copy of the engineering power specifications prior to the Commencement Date. AC power voltage and phase ratings shall be determined on a per location basis. At

Comcast Phone's option, Comcast Phone may arrange for AC power in an adjacent collocation arrangement from a retail provider of electrical power.

8.7.7 Comcast Phone shall contract with a BellSouth Certified Supplier to perform the installation and removal of dedicated power cable support structure within Comcast Phone's arrangement and terminations of cable within the Collocation Space.

8.7.8 Fused Amp Billing. In all states, except as noted above in 8.7.1 for Florida, BellSouth shall make available –48V DC power on a per fused amp, per month basis, pursuant to the following formula:

For power provisioned from a BDFB. The number of fused amps requested by Comcast Phone on its application should reflect a multiplier of 1.5 to convert its requested amps to fused amps, with a minimum of ten (10) fused amps required. The number of fused amps requested by Comcast Phone on its collocation application will be multiplied by the DC power fused amp rate set forth in Exhibit B.

For existing power configurations that are provisioned from BellSouth's main power board. The number of fused amps made available at the main power board, in increments of 225 amps/main power board circuit, will be multiplied by the DC power fused amp rate set forth in Exhibit B. In Florida, the number of fused amps requested by Comcast Phone on its collocation application will be multiplied by the DC power fused amp rate set forth in Exhibit B

8.7.9 Florida Power Usage Option. In Florida only, Comcast Phone may request that –48 DC power provisioned by BellSouth to Comcast Phone's Collocation Space be assessed per ampere (amp), per month based upon amps used, pursuant to the rates set forth in Exhibit B of this Attachment. Monthly recurring power charges will be assessed on the Space Acceptance Date or Space Ready Date, whichever is appropriate, pursuant to Section 8.3. If Comcast Phone desires to convert existing physical collocation arrangements to the Florida Power Usage Option (hereinafter "FL Option"), then the monthly recurring power charges that are applicable to the FL Option, contained in Exhibit B, will be assessed on the Space Ready Date associated with the Subsequent Application submitted by Comcast Phone to convert an existing collocation arrangement to the FL Option. The monthly recurring charges for DC power, under the FL Option, shall be calculated and applied based on the amount of power Comcast Phone requests that it be allowed to draw at a given time to a specific physical collocation arrangement in a particular BellSouth Premises on Comcast Phone's Initial Application or Subsequent Application. BellSouth shall allow Comcast Phone, at Comcast Phone's option, to order a power feed that is capable of delivering a higher DC power level but to fuse this power feed so as to allow a power level less than the feed's maximum to be drawn by Comcast Phone. BellSouth is not required to build its central office power infrastructure to meet Comcast Phone's forecasted DC power demand. Comcast Phone must specify on its Initial or Subsequent Application

the power level it wishes to be able to draw from BellSouth's power plant for each existing collocation arrangement Comcast Phone converts to the FL Option or for any new collocation arrangements Comcast Phone establishes under the FL Option.

8.7.9.1 BellSouth, at any time and at its own expense, shall have the right to verify the accuracy of Comcast Phone's power usage under the FL Option for a specific collocation arrangement in a particular BellSouth Premises, based on a meter reading(s) taken by BellSouth of the amount of power being consumed by Comcast Phone's collocation arrangement. BellSouth may perform its own meter reading(s) via any method it chooses, such as, but not limited to, a clamp-on ammeter. If the meter reading(s) varies by more than ten percent (10%) or five (5) amps from the power usage that has been requested by Comcast Phone for the collocation arrangement, under the FL Option, the Parties agree to work cooperatively to reconcile such discrepancy and establish the appropriate usage figure in a reasonable and expeditious manner. If the Parties substantiate BellSouth's reading, then BellSouth shall adjust Comcast Phone's billing to reflect BellSouth's power reading beginning with the first day of the month immediately following the date of the last metered reading taken by BellSouth.

8.7.9.2 BellSouth shall assess Comcast Phone a monthly recurring charge for DC power under the FL Option, as set forth in Exhibit B of this Attachment. Comcast Phone shall notify BellSouth of any change in its DC power usage by submitting a Subsequent Application, which reflects the new DC power level desired by Comcast Phone. The requested change in DC power usage will be reflected in Comcast Phone's next scheduled monthly billing cycle.

8.7.10 Tennessee Caged Collocation Power Usage Metering Option. In Tennessee only, Comcast Phone may request that DC power provisioned by BellSouth to Comcast Phone's caged Collocation Space be assessed pursuant to the Tennessee Regulatory Authority's Power Usage Metering Option (hereinafter "TN Option"). If Comcast Phone chooses the TN Option, BellSouth will assess Comcast Phone for -48V DC power using the following two components: (1) the actual measured AC usage, and (2) the DC power plant infrastructure provisioned by BellSouth to support the total number of fused amps of DC power requested by Comcast Phone on Comcast Phone's Initial Collocation Application and all Subsequent Collocation Applications. These monthly recurring power charges will be assessed by BellSouth on the Space Acceptance Date or Space Ready Date, whichever is appropriate, pursuant to Section 8.3. If Comcast Phone desires to convert an existing caged collocation arrangement to the TN Option, then the monthly recurring power charges that are applicable to the TN Option, contained in Exhibit B, will be assessed on the Space Ready Date associated with the Subsequent Application submitted by Comcast Phone to convert an existing caged collocation arrangement to the TN Option.

8.7.10.1 BellSouth, or its BellSouth Certified Supplier, will perform all metering activities, which will include providing the necessary ammeter or other measurement device, to

measure the actual power usage (AC usage) being drawn by Comcast Phone's collocation equipment on both the A and B power feeds. The AC Usage component of the DC power charge will be based upon the sum of either the instantaneous or busy hour average electric current readings, depending on the capabilities of the ammeter or other measurement device. Comcast Phone may, at its sole cost and expense, install its own meters on those BDFBs located in its own caged Collocation Space(s) and may notify BellSouth if it would like to offer BellSouth the option of using such meters for the purposes of measuring Comcast Phone's actual power usage. In such case, BellSouth, or its BellSouth Certified Supplier, will have the option of reading and recording the actual power usage from either the meter installed or maintained by Comcast Phone on Comcast Phone's own BDFB(s) or via a BellSouth provided measurement device. The usage reading for the option elected by BellSouth shall be used for purposes of calculating the DC power usage billing.

8.7.10.2 If BellSouth, or its BellSouth Certified Supplier, requires access to Comcast Phone's caged Collocation Space(s) for purposes of measuring the power usage, BellSouth or its BellSouth Certified Supplier shall provide Comcast Phone with a minimum of forty-eight (48) hours notice that access is required. Comcast Phone shall respond to such request for access within twenty-four (24) hours for the purpose of establishing the date and time of access to Comcast Phone's caged Collocation Space(s). Once the date and time of access to Comcast Phone's caged Collocation Space(s) has been agreed upon, Comcast Phone and BellSouth, or its BellSouth Certified Supplier, shall adhere to the agreed upon date and time, or provide a minimum of twenty-four (24) hours notice to the other Party if the original appointment(s) will be missed or must be canceled and rescheduled. If Comcast Phone fails to provide access to its caged Collocation Space(s) or fails to provide BellSouth, or its BellSouth Certified Supplier, with sufficient notification of the missed appointment(s), as noted above, then Comcast Phone shall pay the non-recurring "Additional Meter Reading Trip Charge", as set forth in Exhibit B of this Attachment, for each additional meter reading trip that must be rescheduled to measure Comcast Phone's power usage for such caged Collocation Space(s). Comcast Phone and the BellSouth Certified Supplier may jointly agree to less stringent notification requirements to address, for example, any service interruption or restoration of service situations, on a location-by-location basis.

8.7.10.3 For each new caged collocation arrangement for which Comcast Phone desires the TN Option, Comcast Phone shall indicate on Comcast Phone's Initial Application that the TN Option is being selected. For each location that Comcast Phone wishes to convert to the TN Option, Comcast Phone will submit a Subsequent Application and agrees to include in the Comments section of the Subsequent Application the following comment:

> This Subsequent Application is Comcast Phone's certification that Comcast Phone is opting to convert this caged collocation arrangement to the TN Option and will

permit BellSouth, or the BellSouth Certified Supplier, to measure its actual power usage on all power feeds.

8.7.10.4 BellSouth will bill Comcast Phone a Power Reconfiguration Only Application Fee, as set forth in Exhibit B of this Attachment, on the date that BellSouth provides an Application Response to each Subsequent Application submitted by Comcast Phone requesting to convert a caged collocation arrangement to the TN Option. BellSouth shall then arrange for the measurement of Comcast Phone's actual power usage on each power feed (each A and B power feed) once each quarter at each of Comcast Phone's caged collocation arrangements for which Comcast Phone has submitted an Initial or Subsequent Application electing the TN Option. Based upon the actual power usage measurement taken by BellSouth or the BellSouth Certified Supplier, BellSouth shall assess Comcast Phone for AC power usage for the following quarter based upon Comcast Phone's actual metered usage for each power feed (both the A and B power feeds) or a minimum of ten (10) amps of -48V DC power usage for the sum of the A and B feeds for each power cable, whichever is greater. Such usage shall then be multiplied by the AC power consumption rate, set forth in Exhibit B of this Attachment, to determine the appropriate monthly recurring AC Usage charge that will be billed to Comcast Phone for the following three (3) months or until the next AC power usage measurement is taken, whichever is later.

8.7.10.5 Either Party, within fifteen (15) days of notice of the usage measurement established by the scheduled meter reading, may challenge the accuracy of that reading by requesting a new reading. If Comcast Phone requests that an unscheduled (prior to the next scheduled quarterly power reading date) power usage reading be taken, then Comcast Phone will be responsible for paying the "Additional Meter Reading Trip Charge" contained in Exhibit B of this Attachment. If BellSouth requests a power usage reading be taken in this instance, then Comcast Phone will not be charged the "Additional Meter Reading Trip Charge" for the unscheduled meter reading. If the readings vary by more than ten (10) % or five (5) Amps, whichever is greater, the Parties shall work cooperatively to reconcile such discrepancies and establish the appropriate usage figure in a reasonable and expeditious manner. If the readings do not vary outside these ranges, the initial reading will be used to calculate Comcast Phone's AC Usage charge for the next three (3) months.

8.7.10.6 In the event BellSouth elects to measure Comcast Phone's power using Comcast Phone's BDFB meter, then BellSouth, at any time and at its own expense, shall have the right to verify the accuracy of Comcast Phone's BDFB meter by performing its own meter reading via an alternate method, such as, but not limited to, an ammeter. If the meter readings vary significantly, the Parties agree to perform a joint investigation. If Comcast Phone's BDFB meter is found to be in error, then Comcast Phone agrees to recalibrate, repair, or replace its meter as required. The Parties recognize that the meter readings discussed in this Attachment are instantaneous readings that can experience minor fluctuations due to usage traffic, voltage fluctuations, and calibration

of the meters themselves. The readings must vary by more than ten (10) % or five (5) Amps, whichever is greater, before any recalibration, repair, or replacement will be required. If the BellSouth reading is substantiated, BellSouth shall adjust Comcast Phone's billing retroactive to the beginning of the quarter for which the last meter reading was taken.

8.7.10.7 When Comcast Phone submits the appropriate Initial or Subsequent Application indicating its desire to elect the TN Option for a specific caged collocation arrangement in a particular BellSouth Premises, BellSouth will provide the associated Application Response pursuant to Section 6 of this Attachment. It will then be the responsibility of Comcast Phone to submit a BFFO, indicating its desire to proceed with its request to elect the TN Option. After BellSouth receives the BFFO from Comcast Phone, the Initial or Subsequent Application will be completed by BellSouth within the provisioning intervals contained in Section 7 of this Attachment and Comcast Phone will be notified of the Space Ready Date or when the appropriate record and database changes have been made by BellSouth to reflect Comcast Phone's election of the TN Option (which will be considered the "Space Ready Date" for purposes of a Subsequent Application submitted to convert a specific caged collocation arrangement in a particular BellSouth Premises to the TN Option). BellSouth will not permit Comcast Phone to elect an earlier Space Acceptance Date than the Space Ready Date for any request submitted via a Subsequent Application for an existing caged collocation arrangement. When a Subsequent Application is used to elect the TN Option and there are no other changes requested, billing for the recurring charges associated with the AC Usage and DC Power Infrastructure components will begin upon the Space Ready Date. If Comcast Phone occupies the space prior to the Space Ready Date, for Initial Application requests only, the date Comcast Phone occupies the space will be deemed the new Space Acceptance Date and billing for the AC Usage and DC Power Infrastructure components will begin on that date. When Comcast Phone elects to move to the TN Option, the number of fused amps of DC Power infrastructure capacity requested by Comcast Phone on its Initial or Subsequent Application will be used for calculating the number of amps to be billed for the AC Usage component until such time as BellSouth or its BellSouth Certified Supplier can perform, under the currently existing quarterly meter reading schedule, a reading of Comcast Phone's power usage for the requested caged Collocation Space. As soon as this reading has been taken, BellSouth will adjust Comcast Phone's billing accordingly to reflect the actual metered usage back to the Space Acceptance Date. BellSouth will also use this reading for billing purposes until the next quarterly meter reading is performed by BellSouth or its BellSouth Certified Supplier.

8.7.10.8 BellSouth shall assess Comcast Phone the monthly recurring charge as set forth in Exhibit B of this Attachment for BellSouth's power plant infrastructure component of the DC power charges based upon the number of fused DC power amps requested by Comcast Phone, as reflected by Comcast Phone on its Initial Application, as well as any Subsequent Applications (i.e., augment applications), for the particular caged

collocation arrangement(s) converted to the TN Option or any new caged collocation arrangement(s) for which Comcast Phone has chosen the TN Option.

8.7.10.9 Comcast Phone agrees to submit a Subsequent Application to notify BellSouth when Comcast Phone has removed or installed telecommunications equipment in Comcast Phone's physical Collocation Space to ensure that Comcast Phone's existing fused DC power capacity is sufficiently engineered to accommodate the power requirements associated with the installation of additional equipment in Comcast Phone's Collocation Space. An associated change in power usage will be reflected in the next quarterly power measurement billing cycle.

8.7.10.10 BellSouth will bill Comcast Phone a monthly recurring charge per caged Collocation Space for each arrangement that Comcast Phone has converted to the TN Option or has elected the TN Option for new caged Collocation Space. This "Meter Reading" monthly recurring rate element will be assessed to Comcast Phone for the first twelve (12) power circuits (each A and B feed counts as two circuits), and then for each additional two (2) circuits, read by BellSouth or its BellSouth Certified Supplier, at the rates set forth in Exhibit B of this Attachment and based on whether the power meter is provided by BellSouth or its BellSouth Certified Supplier or Comcast Phone.

8.7.11 In Alabama and Louisiana, Comcast Phone has the option to purchase power directly from an electric utility company. Under such option, Comcast Phone is responsible for contracting with the electric utility company for its own power feed and meter and is financially responsible for purchasing all equipment necessary to accomplish the arrangement, including inverters, batteries, power boards, bus bars, BDFBs, backup power supplies and cabling. The actual work to install this arrangement must be performed by a BellSouth Certified Supplier hired by Comcast Phone. Comcast Phone's BellSouth Certified Supplier must comply with all applicable safety codes, including the NEC and National Electric Safety Code (NESC) standards, in the installation of this power arrangement. If Comcast Phone currently has power supplied by BellSouth, Comcast Phone may request to change its Collocation Space to obtain power from an electric utility company by submitting a Subsequent Application. BellSouth will waive the application fee for this Subsequent Application if no other changes are requested therein. Any floor space, cable racking, etc. utilized by Comcast Phone in provisioning said power will be billed by BellSouth on an ICB basis.

8.7.12 In South Carolina, Comcast Phone has the option to purchase power directly from an electric utility company where technically feasible and where space is available in a requested BellSouth Premises. Under such option, Comcast Phone is responsible for contracting with the electric utility company for its own power feed and meter, and is financially responsible for purchasing all equipment necessary to accomplish the conversion of the commercial AC power to DC power, including inverters, batteries, power boards, bus bars, BDFBs, backup power supplies and power cabling. The actual work to install this arrangement must be performed by a BellSouth Certified Supplier hired by Comcast Phone. Comcast Phone's BellSouth Certified Supplier

must comply with all applicable national, regional, state and local safety, electrical, fire and building codes, including the NESC standards, in the installing this power arrangement, just as BellSouth is required to comply with these codes. Comcast Phone must submit an application to BellSouth for the appropriate amount of Collocation Space that Comcast Phone requires in order to install this type of power arrangement. BellSouth will evaluate the request and determine if the appropriate amount of space is available within the BellSouth Premises for the installation of Comcast Phone's power equipment and facilities. This type of power arrangement must be located in an appropriate area in the BellSouth Premises that has been properly conditioned for the installation of power equipment and conforms to the applicable national, regional, state and local safety, electrical, fire and building codes. BellSouth shall waive the application fee or any other nonrecurring charge that would otherwise be due from a competitive local exchange carrier (CLEC) that decides to reconfigure an existing collocation power arrangement so as to purchase power directly from an electric utility company as provided herein. Comcast Phone shall be responsible for the recurring charges associated with the additional space needed in the BellSouth Premises for this type of power arrangement, including space required to place associated power-related equipment and facilities (i.e., batteries, generator, fuse panel, power meter, etc.). If there is no space available for this type of power arrangement in the requested BellSouth Premises, BellSouth may seek a waiver of these requirements from the Commission for the BellSouth Premises requested. Comcast Phone would have the option to order its power needs directly from BellSouth.

8.7.13 In Alabama and Louisiana, if Comcast Phone has existing power configurations currently served from the BellSouth main power board and requests that its power be reconfigured to connect to a BellSouth BDFB, in a specific BellSouth Premises, Comcast Phone must submit a Subsequent Application to BellSouth. BellSouth will provide a response to such application within seven (7) days and no application fee will be assessed by BellSouth for this one time only power reconfiguration to a BellSouth BDFB. For any power reconfigurations thereafter, Comcast Phone will submit a Subsequent Application and the appropriate application fee will apply.

8.8 Cable Installation. Cable Installation fees will be assessed on a per entrance cable basis. This nonrecurring charge will be billed by BellSouth upon receipt of Comcast Phone's BFFO.

8.9 Cable Records. Cable Records charges apply for work activities required to build or remove existing cable records assigned to Comcast Phone in BellSouth's database systems. The VG/DS0 per cable record charge is for a maximum of 3,600 records per request. The fiber cable record charge is for a maximum of 99 records per request. Cable Record fees will be assessed as a nonrecurring charge, upon receipt of Comcast Phone's BFFO, in all BellSouth states, except Louisiana. In Louisiana, Cable Record fees will be assessed on a monthly recurring charge basis, upon receipt of Comcast Phone's BFFO.

8.10 Security Escort. After Comcast Phone has used its one accompanied site visit, pursuant to Section 5.12.1, and prior to Comcast Phone's completion of the BellSouth Security Training requirements, contained in Section 12 of this Agreement, a security escort will be required when Comcast Phone's employees, approved agent, supplier, or Guest(s) desire access to the entrance manhole or a BellSouth Premises. The rates for security escort service are assessed pursuant to the fee schedule contained in Exhibit B, beginning with the scheduled escort time agreed to by the Parties. BellSouth will wait for one-half (1/2) hour after the scheduled escort time to provide such requested escort service and Comcast Phone shall pay for such half-hour charges in the event Comcast Phone's employees, approved agent, supplier or Guest(s) fails to show up for the scheduled escort appointment.

8.11 Other. If no collocation rate element and associated rate is identified in Exhibit B of this Attachment, the Parties, upon request by either Party, will negotiate the rate for the specific collocation service or function identified in this Attachment.

## 9. Insurance

9.1 Comcast Phone shall, at its sole cost and expense, procure, maintain, and keep in force insurance as specified in this Section and underwritten by insurance companies licensed to do business in the states applicable under this Agreement and having a Best's Insurance Rating of A-.

9.2 Comcast Phone shall maintain the following specific coverage:

9.2.1 Commercial General Liability coverage in the amount of ten million dollars ($10,000,000.00) or a combination of Commercial General Liability and Excess/Umbrella coverage totaling not less than ten million dollars ($10,000,000.00). BellSouth shall be named as an Additional Insured on the Commercial General Liability policy as specified herein.

9.2.2 Statutory Workers Compensation coverage and Employers Liability coverage in the amount of one hundred thousand dollars ($100,000.00) each accident, one hundred thousand dollars ($100,000.00) each employee by disease, and five hundred thousand dollars ($500,000.00) policy limit by disease.

9.2.3 All Risk Property coverage on a full replacement cost basis insuring all of Comcast Phone's real and personal property situated on or within a BellSouth Premises.

9.2.4 Comcast Phone may elect to purchase business interruption and contingent business interruption insurance, having been advised that BellSouth assumes no liability for loss of profit or revenues should an interruption of service occur.

9.3 The limits set forth in Section 9.2 above may be increased by BellSouth from time to time during the term of this Agreement, upon thirty (30) days notice to Comcast

Phone, to at least such minimum limits as shall then be customary with respect to comparable occupancy of BellSouth structures.

9.4 All policies purchased by Comcast Phone shall be deemed to be primary and not contributing to or in excess of any similar coverage purchased by BellSouth. All insurance must be in effect on or before the date equipment is delivered to BellSouth's Premises and shall remain in effect for the term of this Agreement or until all of Comcast Phone's property has been removed from BellSouth's Premises, whichever period is longer. If Comcast Phone fails to maintain required coverage, BellSouth may pay the premiums thereon and seek reimbursement of same from Comcast Phone.

9.5 Comcast Phone shall submit certificates of insurance reflecting the coverage required pursuant to this Section within a minimum of ten (10) business days prior to the commencement of any work in the Collocation Space. Failure to meet this interval may result in construction and equipment installation delays. Comcast Phone shall arrange for BellSouth to receive thirty (30) business days' advance notice of cancellation or non-renewal from Comcast Phone's insurance company. Comcast Phone shall forward a certificate of insurance and notice of cancellation/non-renewal to BellSouth at the following address:

BellSouth Telecommunications, Inc.
Attn.: Risk Management Office - Finance
17F54 BellSouth Center
675 W. Peachtree Street
Atlanta, Georgia 30375

9.6 Comcast Phone must conform to recommendations made by BellSouth's fire insurance company to the extent BellSouth has agreed to, or shall hereafter agree to, such recommendations.

9.7 Self-Insurance. If Comcast Phone's net worth exceeds five hundred million dollars ($500,000,000.00), Comcast Phone may elect to request self-insurance status in lieu of obtaining any of the insurance required in Section 9.2. Comcast Phone shall provide audited financial statements to BellSouth thirty (30) days prior to the commencement of any work in the Collocation Space. BellSouth shall then review such audited financial statements and respond in writing to Comcast Phone in the event that self-insurance status is not granted to Comcast Phone. If BellSouth approves Comcast Phone for self-insurance, Comcast Phone shall annually furnish to BellSouth, and keep current, evidence of such net worth that is attested to by one of Comcast Phone's corporate officers. The ability to self-insure shall continue so long as the Comcast Phone meets all of the requirements of this Section. If Comcast Phone subsequently no longer satisfies the requirements of this Section, Comcast Phone is required to purchase insurance as indicated by Section 9.2.

9.8 The net worth requirements set forth in Section 9.7 may be increased by BellSouth from time to time during the term of this Agreement upon thirty (30) days' notice to Comcast Phone to at least such minimum limits as shall then be customary with respect to comparable occupancy of a BellSouth Premises

9.9 Failure to comply with the provisions of this Section will be deemed a material breach of this Attachment.

## 10. Mechanics Lien

10.1 If any mechanics lien or other liens are filed against property of either Party (BellSouth or Comcast Phone), or any improvement thereon by reason of or arising out of any labor or materials furnished or alleged to have been furnished or to be furnished to or for the other Party or by reason of any changes, or additions to said property made at the request or under the direction of the other Party, the other Party directing or requesting those changes shall, within thirty (30) business days after receipt of written notice from the Party against whose property said lien has been filed, either pay such lien or cause the same to be bonded off the affected property in the manner provided by law. The Party causing said lien to be placed against the property of the other shall also defend, at its sole cost and expense, on behalf of the other, any action, suit or proceeding which may be brought for the enforcement of such liens and shall pay any damage and discharge any judgment entered thereon.

## 11. Inspections

11.1 BellSouth may conduct an inspection of Comcast Phone's equipment and facilities in Comcast Phone's Collocation Space(s) prior to the activation of facilities and/or services between Comcast Phone's equipment and equipment of BellSouth. BellSouth may conduct an inspection if Comcast Phone adds equipment and may otherwise conduct routine inspections at reasonable intervals mutually agreed upon by the Parties. BellSouth shall provide Comcast Phone with a minimum of forty-eight (48) hours or two (2) business days, whichever is greater, advance notice of all such inspections. All costs of such inspections shall be borne by BellSouth.

## 12. Security and Safety Requirements

12.1 Unless otherwise specified, Comcast Phone will be required, at its own expense, to conduct a statewide investigation of criminal history records for each Comcast Phone employee hired in the past five years being considered for work on a BellSouth Premises, for the states/counties where the Comcast Phone employee has worked and lived for the past five years. Where state law does not permit statewide collection or reporting, an investigation of the applicable counties is acceptable. Comcast Phone shall not be required to perform this investigation if an affiliated company of Comcast Phone has performed an investigation of the Comcast Phone employee seeking access, if such investigation meets the criteria set forth above. This requirement will not apply

if Comcast Phone has performed a pre-employment statewide investigation of criminal history records of the Comcast Phone employee for the states/counties where the Comcast Phone employee has worked and lived for the past five years or, where state law does not permit a statewide investigation, an investigation of the applicable counties.

12.2 Comcast Phone will be required to administer to its personnel assigned to the BellSouth Premises security training either provided by BellSouth, or meeting criteria defined by BellSouth at www.interconnection.bellsouth.com/guides.

12.3 Comcast Phone shall provide its employees and agents with picture identification, which must be worn and visible at all times while in Comcast Phone's Collocation Space or other areas in or around the BellSouth Premises. The photo identification card shall bear, at a minimum, the employee's name and photo and Comcast Phone's name. BellSouth reserves the right to remove from a BellSouth Premises any employee of Comcast Phone not possessing identification issued by Comcast Phone or who has violated any of BellSouth's policies as outlined in the CLEC Security Training documents. Comcast Phone shall hold BellSouth harmless for any damages resulting from such removal of Comcast Phone's personnel from a BellSouth Premises. Comcast Phone shall be solely responsible for ensuring that any Guest(s) of Comcast Phone is in compliance with all subsections of this Section.

12.4 Comcast Phone shall not assign to the BellSouth Premises any personnel with records of felony criminal convictions. Comcast Phone shall not assign to the BellSouth Premises any personnel with records of misdemeanor convictions, except for misdemeanor traffic violations, without advising BellSouth of the nature and gravity of the offense(s). BellSouth reserves the right to refuse building access to any of Comcast Phone's personnel who have been identified to have misdemeanor criminal convictions. Notwithstanding the foregoing, in the event Comcast Phone chooses not to advise BellSouth of the nature and gravity of any misdemeanor conviction, Comcast Phone may, in the alternative, certify to BellSouth that it shall not assign to the BellSouth Premises any personnel with records of misdemeanor convictions (other than misdemeanor traffic violations).

12.4.1 Comcast Phone shall not knowingly assign to the BellSouth Premises any individual who was a former employee of BellSouth and whose employment with BellSouth was terminated for a criminal offense, whether or not BellSouth sought prosecution of the individual for the criminal offense.

12.4.2 Comcast Phone shall not knowingly assign to the BellSouth Premises any individual who was a former supplier of BellSouth and whose access to a BellSouth Premises was revoked due to the commission of a criminal offense, whether or not BellSouth sought prosecution of the individual for the criminal offense.

12.5 For each Comcast Phone employee or agent hired by Comcast Phone within the last five years, who requires access to a BellSouth Premises to perform work in Comcast Phone Collocation Space(s), Comcast Phone shall furnish BellSouth certification that the aforementioned background check and security training were completed. This certification must be provided to and approved by BellSouth before an employee or agent will be granted such access to a BellSouth Premises. The certification will contain a statement that no felony convictions were found and certify that the employee completed the security training. If the employee's criminal history includes misdemeanor convictions, Comcast Phone will disclose the nature of the convictions to BellSouth at that time. In the alternative, Comcast Phone may certify to BellSouth that it shall not assign to the BellSouth Premises any personnel with records of misdemeanor convictions, other than misdemeanor traffic violations.

12.5.1 For all other Comcast Phone employees requiring access to a BellSouth Premises pursuant to this Attachment, Comcast Phone shall furnish BellSouth, prior to an employee gaining such access, a certification that the employee is not subject to the requirements of Section 12.5 above and that security training was completed by the employee.

12.6 At BellSouth's request, Comcast Phone shall promptly remove from the BellSouth Premises any employee of Comcast Phone that BellSouth does not wish to grant access to a BellSouth Premises: 1) pursuant to any investigation conducted by BellSouth, or 2) prior to the initiation of an investigation if an employee of Comcast Phone is found interfering with the property or personnel of BellSouth or another collocated telecommunications carrier, provided that an investigation shall be promptly commenced by BellSouth.

12.7 Security Violations. BellSouth reserves the right to interview Comcast Phone's employees, agents, suppliers, or Guests in the event of wrongdoing in or around a BellSouth Premises or involving BellSouth's or another collocated telecommunications carrier's property or personnel, provided that BellSouth shall provide reasonable notice to Comcast Phone's Security representative of such interview. Comcast Phone and its employees, agents, suppliers, or Guests shall reasonably cooperate with BellSouth's investigation into allegations of wrongdoing or criminal conduct committed by, witnessed by, or involving Comcast Phone's employees, agents, suppliers, or Guests. Additionally, BellSouth reserves the right to bill Comcast Phone for all reasonable costs associated with investigations involving its employees, agents, suppliers, or Guests if it is established and mutually agreed in good faith that Comcast Phone's employees, agents, suppliers, or Guests are responsible for the alleged act(s). BellSouth shall bill Comcast Phone for BellSouth property, which is stolen or damaged, where an investigation determines the culpability of Comcast Phone's employees, agents, suppliers, or Guests and where Comcast Phone agrees, in good faith, with the results of such investigation. Comcast Phone shall notify BellSouth in writing immediately in the event that Comcast Phone discovers one of its

employees, agents, suppliers, or Guests already working on the BellSouth Premises is a possible security risk. Upon request of the other Party, the Party who is the employer shall discipline consistent with its employment practices, up to and including removal from BellSouth's Premises, any employee found to have violated the security and safety requirements of this Section. Comcast Phone shall hold BellSouth harmless for any damages resulting from such removal of Comcast Phone's personnel from a BellSouth Premises.

12.8 Use of Supplies. Unauthorized use of equipment, supplies or other property by either Party, whether or not used routinely to provide telephone service will be strictly prohibited and handled appropriately. Costs associated with such unauthorized use may be charged to the offending Party, as may be all associated investigative costs.

12.9 Use of Official Lines. Except for non-toll calls necessary in the performance of their work, neither Party shall use the telephone(s) of the other Party on BellSouth's Premises. Charges for unauthorized telephone calls may be charged to the offending Party, as may be all associated investigative costs.

12.10 Accountability. Full compliance with the Security requirements of this Section shall in no way limit the accountability of either Party to the other for the improper actions of its employees, agents, suppliers, or Guests.

## 13. Destruction of Collocation Space

13.1 In the event a Collocation Space is wholly or partially damaged by fire, windstorm, hurricane, tornado, flood or by similar force majeure circumstances to such an extent as to be rendered wholly unsuitable for Comcast Phone's permitted use hereunder, then either Party may elect within ten (10) days after such damage, to terminate occupancy of the damaged Collocation Space, and if either Party shall so elect, by giving the other written notice of termination, both Parties shall stand released of and from further liability under the terms hereof. If the Collocation Space shall suffer only minor damage and shall not be rendered wholly unsuitable for Comcast Phone's permitted use, or is damaged and the option to terminate is not exercised by either Party, BellSouth covenants and agrees to proceed promptly without expense to Comcast Phone, except for improvements not to the property of BellSouth, to repair the damage. BellSouth shall have a reasonable time within which to rebuild or make any repairs, and such rebuilding and repairing shall be subject to delays caused by storms, shortages of labor and materials, government regulations, strikes, walkouts, and causes beyond the control of BellSouth, which causes shall not be construed as limiting factors, but as exemplary only. Comcast Phone may, at its own expense, accelerate the rebuild of its Collocation Space and equipment provided, however, that a BellSouth Certified Supplier is used and the necessary space preparation has been completed. If Comcast Phone's acceleration of the project increases the cost of the project, then those additional charges will be incurred at Comcast Phone's expense. Where allowed and where practical, Comcast Phone may erect a temporary facility

while BellSouth rebuilds or makes repairs. In all cases where the Collocation Space shall be rebuilt or repaired, Comcast Phone shall be entitled to an equitable abatement of rent and other charges, depending upon the unsuitability of the Collocation Space for Comcast Phone's permitted use, until such Collocation Space is fully repaired and restored and Comcast Phone's equipment installed therein (but in no event later than thirty (30) days after the Collocation Space is fully repaired and restored). Where Comcast Phone has placed an Adjacent Arrangement pursuant to Section 3.4, Comcast Phone shall have the sole responsibility to repair or replace said Adjacent Arrangement provided herein. Pursuant to this Section, BellSouth will restore the associated services to the Adjacent Arrangement.

**14. Eminent Domain**

14.1 If the whole of a Collocation Space or Adjacent Arrangement shall be taken by any public authority under the power of eminent domain, then this Attachment shall terminate with respect to such Collocation Space or Adjacent Arrangement as of the date possession shall be taken by such public authority and rent and other charges for the Collocation Space or Adjacent Arrangement shall be paid up to that day with a proportionate refund by BellSouth of such rent and charges as may have been paid in advance for a period subsequent to the date of the taking. If any part of the Collocation Space or Adjacent Arrangement shall be taken under eminent domain, BellSouth and Comcast Phone shall each have the right to terminate this Attachment with respect to such Collocation Space or Adjacent Arrangement and declare the same null and void, by written notice of such intention to the other Party within ten (10) days after such taking.

**15. Nonexclusivity**

15.1 Comcast Phone understands that this Attachment is not exclusive and that BellSouth may enter into similar agreements with other Parties. Assignment of Collocation Space pursuant to all such agreements shall be determined by space availability and made on a first come, first served basis

# ENVIRONMENTAL AND SAFETY PRINCIPLES

The following principles provide basic guidance on environmental and safety issues when applying for and establishing physical collocation arrangements.

## 1. GENERAL PRINCIPLES

1.1 Compliance with Applicable Law. BellSouth and Comcast Phone agree to comply with applicable federal, state, and local environmental and safety laws and regulations including U.S. Environmental Protection Agency (USEPA) regulations issued under the Clean Air Act (CAA), Clean Water Act (CWA), Resource Conservation and Recovery Act (RCRA), Comprehensive Environmental Response, Compensation and Liability Act (CERCLA), Superfund Amendments and Reauthorization Act (SARA), the Toxic Substances Control Act (TSCA), and OSHA regulations issued under the Occupational Safety and Health Act of 1970, as amended, and National Fire Protection Association (NFPA), NEC and National Electric Safety Codes (NESC) (Applicable Laws) requirements. Each Party shall notify the other if compliance inspections are conducted by regulatory agencies and/or citations are issued that relate to any aspect of this Attachment.

1.2 Notice. BellSouth and Comcast Phone shall provide notice to the other, including any Material Safety Data Sheets (MSDSs), of known and recognized physical hazards or Hazardous Chemicals existing on site or brought on site. A Hazardous Chemical inventory list is posted on an OSHA Poster and updated annually at each Central Office. This Poster is normally located near the front entrance of the building or in the lounge area. Each Party is required to provide specific notice for known potential Imminent Danger conditions. Comcast Phone should contact 1-800-743-6737 for any BellSouth MSDS required.

1.3 Practices/Procedures. BellSouth may make available additional environmental control procedures for Comcast Phone to follow when working at a BellSouth Premises (See Section 2, below). These practices/procedures will represent the regular work practices required to be followed by the employees and suppliers of BellSouth for environmental protection. Comcast Phone will require its suppliers, agents, Guests, and others accessing the BellSouth Premises to comply with these practices. Section 2 lists the Environmental categories where BST practices should be followed by Comcast Phone when operating in the BellSouth Premises.

1.4 Environmental and Safety Inspections. BellSouth reserves the right to inspect the Comcast Phone space with proper notification. BellSouth reserves the right to stop any Comcast Phone work operation that imposes Imminent Danger to the environment, employees or other persons in or around a BellSouth Premises.

1.5 Hazardous Materials Brought On Site. Any hazardous materials brought into, used, stored or abandoned at a BellSouth Premises by Comcast Phone are owned by and considered the property of Comcast Phone. Comcast Phone will indemnify BellSouth for claims, lawsuits or damages to persons or property caused by these materials. Without prior written BellSouth approval, no substantial new safety or environmental hazards can be created by Comcast Phone or different hazardous materials

used by Comcast Phone at a BellSouth Premises. Comcast Phone must demonstrate adequate emergency response capabilities for the materials used by Comcast Phone or remaining at a BellSouth Premises.

1.6 Spills and Releases. When contamination is discovered at a BellSouth Premises, either Party discovering the condition must notify the other Party. All Spills or Releases of regulated materials will immediately be reported by Comcast Phone to BellSouth.

1.7 Coordinated Environmental Plans and Permits. BellSouth and Comcast Phone will coordinate plans, permits or information required to be submitted to government agencies, such as emergency response plans, spill prevention control and countermeasures (SPCC) plans and community reporting. If fees are associated with filing, BellSouth and Comcast Phone will develop a cost sharing procedure. If BellSouth's permit or EPA identification number must be used, Comcast Phone must comply with all of BellSouth's permit conditions and environmental processes, including environmental "best management practices (BMP)" (see Section 2, below) and the selection of BST disposition vendors and disposal sites.

1.8 Environmental and Safety Indemnification. BellSouth and Comcast Phone shall indemnify, defend and hold harmless the other Party from and against any claims (including, without limitation, third-party claims for personal injury or death or real or personal property damage), judgments, damages (including direct and indirect damages and punitive damages), penalties, fines, forfeitures, costs, liabilities, interest and losses arising in connection with the violation or alleged violation of any Applicable Law or contractual obligation or the presence or alleged presence of contamination arising out of the acts or omissions of the indemnifying Party, its employees, agents, suppliers, or Guests concerning its operations at a BellSouth Premises.

## 2. CATEGORIES FOR CONSIDERATION OF ENVIRONMENTAL ISSUES

2.1 When performing functions that fall under the following Environmental categories on BellSouth's Premises, Comcast Phone agrees to comply with the applicable sections of the current issue of BellSouth's Environmental and Safety Methods and Procedures (M&Ps), incorporated herein by this reference. Comcast Phone further agrees to cooperate with BellSouth to ensure that Comcast Phone's employees, agents, suppliers and/or Guests are knowledgeable of and satisfy those provisions of BellSouth's Environmental M&Ps, which apply to the specific Environmental function being performed by Comcast Phone, its employees, agents, suppliers, and/or Guests.

2.2 The most current version of the reference documentation must be requested from Comcast Phone's BellSouth Regional Contract Manager (RCM).

| ENVIRONMENTAL CATEGORIES | ENVIRONMENTAL ISSUES | ADDRESSED BY THE FOLLOWING DOCUMENTATION |
|---|---|---|
| Disposal of hazardous material or other regulated material<br>(e.g., batteries, fluorescent tubes, solvents & cleaning materials) | Compliance with all applicable local, state, & federal laws and regulations<br><br>Pollution liability insurance<br><br>EVET approval of supplier | Std T&C 450<br>Fact Sheet Series 17000<br><br>Std T&C 660-3<br><br>Approved Environmental Vendor List (Contact RCM Representative) |
| Emergency response | Hazmat/waste release/spill fire safety emergency | Fact Sheet Series 17000<br>Building Emergency Operations Plan (EOP) (specific to and located on BellSouth's Premises) |
| Contract labor/outsourcing for services with environmental implications to be performed on BellSouth Premises<br>(e.g., disposition of hazardous material/waste; maintenance of storage tanks) | Compliance with all applicable local, state, & federal laws and regulations<br><br>Performance of services in accordance with BST's environmental M&Ps<br><br>Insurance | Std T&C 450<br><br>Std T&C 450-B<br>(Contact RCM Representative for copy of appropriate E/S M&Ps.)<br><br>Std T&C 660 |
| Transportation of hazardous material | Compliance with all applicable local, state, & federal laws and regulations<br><br>Pollution liability insurance<br><br>EVET approval of supplier | Std T&C 450<br>Fact Sheet Series 17000<br><br>Std T&C 660-3<br><br>Approved Environmental Vendor List (Contact RCM Representative) |
| Maintenance/operations work which may produce a waste<br><br>Other maintenance work | Compliance with all applicable local, state, & federal laws and regulations<br><br>Protection of BST employees and equipment | Std T&C 450<br><br>29CFR 1910.147 (OSHA Standard) |

| | | |
|---|---|---|
| | | 29CFR 1910 Subpart O (OSHA Standard) |
| Janitorial services | All waste removal and disposal must conform to all applicable federal, state and local regulations<br><br>All Hazardous Material and Waste<br><br>Asbestos notification and protection of employees and equipment | Procurement Manager (CRES Related Matters)-BST Supply Chain Services<br><br>Fact Sheet Series 17000<br><br>GU-BTEN-001BT, Chapter 3<br>BSP 010-170-001BS (Hazcom) |
| Manhole cleaning | Compliance with all applicable local, state, & federal laws and regulations<br><br>Pollution liability insurance<br><br>EVET approval of supplier | Std T&C 450<br>Fact Sheet 14050<br>BSP 620-145-011PR<br>Issue A, August 1996<br><br>Std T&C 660-3<br><br>Approved Environmental Vendor List (Contact RCM Representative) |
| Removing or disturbing building materials that may contain asbestos | Asbestos work practices | GU-BTEN-001BT, Chapter 3 For questions regarding removing or disturbing materials that contain asbestos, call the BellSouth Building Service Center:<br>AL, MS, TN, KY & LA (local area code) 557-6194<br>FL, GA, NC & SC (local area code) 780-2740 |

## 3. DEFINITIONS

Generator. Under RCRA, the person whose act produces a Hazardous Waste, as defined in 40 CFR 261, or whose act first causes a Hazardous Waste to become subject to regulation. The Generator is legally responsible for the proper management and disposal of Hazardous Wastes in accordance with regulations.

Hazardous Chemical. As defined in the U.S. Occupational Safety and Health (OSHA) hazard communication standard (29 CFR 1910.1200), any chemical which is a health hazard or physical hazard.

Hazardous Waste. As defined in Section 1004 of RCRA.

Imminent Danger. Any conditions or practices at a BellSouth Premises which are such that a danger exists which could reasonably be expected to cause immediate death or serious harm to people or immediate significant damage to the environment or natural resources.

Spill or Release. As defined in Section 101 of CERCLA.

## 4. ACRONYMS

RCM – Regional Collocation Manager (f/k/a Account Team Collocation Coordinator)

BST – BellSouth Telecommunications

CRES – Corporate Real Estate and Services (formerly PS&M)

DEC/LDEC - Department Environmental Coordinator/Local Department Environmental Coordinator

E/S – Environmental/Safety

EVET - Environmental Vendor Evaluation Team

GU-BTEN-001BT - BellSouth Environmental Methods and Procedures

NESC - National Electrical Safety Codes

P&SM - Property & Services Management

Std T&C - Standard Terms & Conditions

# Attachment 4

# Remote Site Collocation

# REMOTE SITE COLLOCATION
# TABLE OF CONTENTS

**1. Scope of Attachment**
- **1.1 Scope**
- **1.2 Right to Occupy**
- **1.3. Space Reservation**
- **1.4. Third Party Property**
- **1.5 Space Reclamation**
- **1.6 Use of Space**
- **1.7 Due Dates**
- **1.8 Compliance**

**2. Space Availability Optional Report**
- **2.1 Space Availability Optional Report**
- **2.2 Remote Terminal Information**

**3. Collocation Options**
- **3.1 Cageless Collocation**
- **3.2 Caged Collocation**
- **3.3 Shared Caged Collocation**
- **3.4 Adjacent Collocation**
- **3.5 Co-Carrier Cross Connects (CCXCs)**

**4. Occupancy**
- **4.1. Space Ready Date**
- **4.2 Acceptance Walk Through**
- **4.3 Early Space Acceptance**
- **4.4 Termination of Occupancy**

**5. Use of Remote Collocation Space**
- **5.1. Equipment Type**
- **5.2. No Marketing**
- **5.3. Equipment Identification**
- **5.4. Entrance Facilities**
- **5.5 Shared Use**
- **5.6 Demarcation Point**
- **5.7 Equipment and Facilities**
- **5.8 BellSouth Access**
- **5.9 Customer Access**
- **5.10 Lost or Stolen Access Keys**
- **5.11 Interference or Impairment**
- **5.12 Personalty and Its Removal**
- **5.13 Alterations**
- **5.14 Upkeep of Remote Collocation Space**

**6. Ordering and Preparation of Remote Collocation Space**
- **6.1. Procedures and Intervals**
- **6.2. Remote Site Application**
- **6.3 Availability of Space**
- **6.4 Space Availability Notification**
- **6.5 Denial of Application**
- **6.6 Petition for Waiver**
- **6.7 Waiting List**
- **6.8 Public Notification**
- **6.9 Application Response**
- **6.10 Application Modifications**
- **6.11 Bona Fide Firm Order**

**7. Construction and Provisioning**
- **7.1 Construction and Provisioning Intervals**
- **7.2. Joint Planning**
- **7.3. Permits**
- **7.4 Use of a BellSouth Certified Supplier**
- **7.5 Alarms and Monitoring**
- **7.6 Virtual to Physical Remote Collocation Space Relocation**
- **7.7 Virtual to Physical Conversion (In-Place)**
- **7.8 Cancellation**
- **7.9 Licenses**
- **7.10 Environmental Compliance**

**8. Rates and Charges**
- **8.1. Rates**
- **8.2 Recurring Charges**
- **8.3 Application Fee**
- **8.4 Bay Space**
- **8.5 Power**
- **8.6 Adjacent Collocation Power**
- **8.7 Security Escort**
- **8.8 Other**

**9. Insurance**

**10. Mechanics Liens**

**11. Inspections**

**12. Security and Safety Requirements**

**13. Destruction of Remote Collocation Space**

**14. Eminent Domain**

**15. Nonexclusivity**

**EXHIBIT A ENVIRONMENTAL AND SAFETY PRINCIPLES**

**EXHIBIT B RATES**

**BELLSOUTH**

**REMOTE SITE COLLOCATION**

## 1. Scope of Attachment

1.1 Scope. The rates, terms, and conditions contained within this Attachment shall only apply when Comcast Phone is occupying the collocation space as a sole occupant or as a Host within a Remote Site Location ("Remote Collocation Space") pursuant to this Attachment. BellSouth Premises include BellSouth Central Offices and Serving Wire Centers (hereinafter "BellSouth Premises"). This Attachment is applicable to BellSouth Premises owned or leased by BellSouth. However, if the BellSouth Premises occupied by BellSouth is leased by BellSouth from a third party, special considerations and intervals may apply in addition to the terms and conditions contained in this Attachment.

1.2 Right to occupy. BellSouth shall offer to Comcast Phone Remote Collocation Space on rates, terms, and conditions that are just, reasonable, non-discriminatory, and consistent with the rules of the Federal Communications Commission ("FCC"). Subject to the rates, terms, and conditions of this Attachment, where space is available and collocation is technically feasible, BellSouth will allow Comcast Phone to occupy that certain area designated by BellSouth within a BellSouth Remote Site Location, or on BellSouth property upon which the BellSouth Remote Site Location is located, of a size, which is specified by Comcast Phone and agreed to by BellSouth. BellSouth Remote Site Locations include cabinets, huts, and controlled environmental vaults owned or leased by BellSouth that house BellSouth Network Facilities. To the extent this Attachment does not include all the necessary rates, terms and conditions for BellSouth Remote Site Locations other than cabinets, huts and controlled environmental vaults, the Parties will negotiate said rates, terms, and conditions upon request for collocation at BellSouth Remote Site Locations other than those specified above.

1.3 Space Reservation.

1.3.1 In all states other than Florida, the number of bays specified by Comcast Phone may contemplate a request for space sufficient to accommodate Comcast Phone's growth within a two-year period.

1.3.2 In the state of Florida, the number of bays specified by Comcast Phone may contemplate a request for space sufficient to accommodate Comcast Phone's growth within an eighteen (18) month period.

1.3.3 Neither BellSouth nor any of BellSouth's affiliates may reserve space for future use on more preferential terms than those set forth above.

1.4 Third Party Property. If the Premises, or the property on which it is located, is leased by BellSouth from a Third Party or otherwise controlled by a Third Party, special considerations and intervals may apply in addition to the terms and conditions of this Attachment. Additionally, where BellSouth notifies Comcast Phone that BellSouth's agreement with a Third Party does not grant BellSouth the ability to provide access and use rights to others, upon Comcast Phone's request, BellSouth will use its best efforts to obtain the owner's consent and to otherwise secure such rights for Comcast Phone. Comcast Phone agrees to reimburse BellSouth for the reasonable and demonstrable costs incurred by BellSouth in obtaining such rights for Comcast Phone. In cases where a Third Party agreement does not grant BellSouth the right to provide access and use rights to others as contemplated by this Attachment and BellSouth, despite its best efforts, is unable to secure such access and use rights for Comcast Phone as above, Comcast Phone shall be responsible for obtaining such permission to access and use such property. BellSouth shall cooperate with Comcast Phone in obtaining such permission.

1.5 Space Reclamation. In the event of space exhaust within a Remote Site Location, BellSouth may include in its documentation for the Petition for Waiver filing any unutilized space in the Remote Site Location. Comcast Phone will be responsible for any justification of unutilized space within its Remote Collocation Space, if the Commission requires such justification.

1.6 Use of Space. Comcast Phone shall use the Remote Collocation Space for the purposes of installing, maintaining and operating Comcast Phone's equipment (which may include testing and monitoring equipment) necessary for interconnection with BellSouth services and facilities or for accessing BellSouth unbundled network elements (UNEs) in accordance with the Act and FCC and Commission rules. The Remote Collocation Space may be used for no other purposes except as specifically described herein or in any amendment hereto.

1.7 Due Dates. If any due date contained in this Attachment falls on a weekend or National holiday, then the due date will be the next business day thereafter. For intervals of ten (10) days or less National holidays will be excluded. . For purposes of this Attachment, national holidays include the following: New Year's Day, Martin Luther King, Jr. Day, President's Day (Washington's Birthday), Memorial Day, Independence Day, Labor Day, Columbus Day, Veteran's Day, Thanksgiving Day, and Christmas Day.

1.8 Compliance. Subject to Section 24 of the General Terms and Conditions of this Agreement, the Parties agree to comply with all applicable federal, state, county, local and administrative laws, rules, ordinances, regulations and codes in the performance of their obligations hereunder.

## 2. Space Availability Optional Report

2.1 Space Availability Optional Report. Upon request from Comcast Phone, BellSouth will provide a written report ("Space Availability Report"), describing in detail the space that is available for collocation and specifying the amount of Remote Collocation Space available at the Remote Site Location requested, the number of collocators present at the Remote Site Location, any modifications in the use of the space since the last report on the Remote Site Location requested and the measures BellSouth is taking to make additional space available for collocation arrangements. A Space Availability Report does not reserve space at the Remote Site Location.

2.1.1 The request from Comcast Phone for a Space Availability Report must be written and must include the Common Language Location Identification ("CLLI") code for both the Remote Site Location and the serving wire center. The CLLI code information for the serving wire center is located in the National Exchange Carrier Association (NECA) Tariff FCC No. 4. If Comcast Phone is unable to obtain the CLLI code for the Remote Site Location from, for example, a site visit to the remote site, Comcast Phone may request the CLLI code from BellSouth. To obtain a CLLI code for a Remote Site Location directly from BellSouth, Comcast Phone should submit to BellSouth a Remote Site Interconnection Request for the serving wire center CLLI code prior to submitting its request for a Space Availability Report. Comcast Phone should complete all the requested information and submit the Request to BellSouth. BellSouth will bill the applicable fee upon receipt of the request.

2.1.2 BellSouth will respond to a request for a Space Availability Report for a particular Remote Site Location within ten (10) days of receipt of such request. BellSouth will make commercially reasonable efforts to respond in ten (10) days to such a request when the request includes from two (2) to five (5) Remote Site Locations within the same state. The response time for requests of more than five (5) Remote Site Locations shall be negotiated between the Parties. If BellSouth cannot meet the ten (10) day response time, BellSouth shall notify Comcast Phone and inform Comcast Phone of the time frame under which it can respond.

2.2 Remote Terminal Information. Upon request, BellSouth will provide Comcast Phone with the following information concerning BellSouth's remote terminals: (i) the address of the remote terminal; (ii) the CLLI code of the remote terminal; (iii) the carrier serving area of the remote terminal; (iv) the designation of which remote terminals subtend a particular central office; and (v) the number and address of customers that are served by a particular remote terminal.

2.2.1 BellSouth will provide this information on a first come, first served basis within thirty (30) days of a Comcast Phone request subject to the following conditions: (i) the information will only be provided on a CD in the same format in which it appears in BellSouth's systems; (ii) the information will only be provided for each serving wire center designated by Comcast Phone, up to a maximum of thirty (30) wire centers per

Comcast Phone request per month per state, and up to for a maximum of one hundred twenty (120) wire centers total per month per state for all CLECs; and (iii) Comcast Phone agrees to pay the costs incurred by BellSouth in providing the information. Multiple Wire Center CLLI code requests may be place on one CD.

## 3. Collocation Options

3.1 Cageless Collocation. BellSouth shall allow Comcast Phone to collocate Comcast Phone's equipment and facilities without requiring the construction of a cage or similar structure. BellSouth shall allow Comcast Phone to have direct access to Comcast Phone's equipment and facilities in accordance with Section 5.8. BellSouth shall make cageless collocation available in single bay increments. Except where Comcast Phone's equipment requires special technical considerations (e.g., special cable racking or isolated ground plane), BellSouth shall assign cageless Remote Collocation Space in conventional equipment rack lineups where feasible. For equipment requiring special technical considerations, Comcast Phone must provide the equipment layout, including spatial dimensions for such equipment pursuant to generic requirements contained in Telcordia GR-63-Core, and shall be responsible for compliance with all special technical requirements associated with such equipment pursuant to Section 7.4 following.

3.2 Caged Collocation. At Comcast Phone's option and expense, Comcast Phone may arrange with a Supplier certified by BellSouth ("BellSouth Certified Supplier") to construct a collocation arrangement enclosure, where technically feasible as that term has been defined by the FCC, in accordance with BellSouth's specifications for a wire mesh enclosure prior to starting equipment installation. Where local building codes require enclosure specifications more stringent than BellSouth's wire mesh enclosure specifications, Comcast Phone and Comcast Phone's BellSouth Certified Supplier must comply with the more stringent local building code requirements. Comcast Phone's BellSouth Certified Supplier shall be responsible for filing and obtaining any and all necessary permits and/or licenses for such construction. BellSouth or BellSouth's designated agent or contractor shall provide, at Comcast Phone's expense, documentation, which may include existing building architectural drawings, enclosure drawings, and specifications etc., necessary for Comcast Phone's BellSouth Certified Supplier to obtain the zoning, permits and/or other licenses. Comcast Phone's BellSouth Certified Supplier shall bill Comcast Phone directly for all work performed for Comcast Phone pursuant to this Attachment and BellSouth shall have no liability for nor responsibility to pay such charges imposed by Comcast Phone's BellSouth Certified Supplier. Comcast Phone must provide the local BellSouth Remote Site Location contact with two Access Keys used to enter the locked enclosure. Except in case of emergency, BellSouth will not access Comcast Phone's locked enclosure prior to notifying Comcast Phone at least forty-eight (48) hours or two (2) business days, whichever is greater, before access to Comcast Phone's Remote Site Location is required. Upon request, BellSouth shall construct the enclosure for Comcast Phone.

3.2.1 BellSouth may elect to review Comcast Phone's plans and specifications, if Comcast Phone has indicated its desire to have Comcast Phone's BellSouth Certified Supplier construct the collocation arrangement enclosure, prior to allowing the construction to start, to ensure Comcast Phone's compliance with BellSouth's wire mesh enclosure specifications. BellSouth will notify Comcast Phone of its desire to execute this review in BellSouth's Application Response to Comcast Phone's application. The Application Response is defined for purposes of this Attachment as BellSouth's written response that includes sufficient information for Comcast Phone to place a firm order for the Remote Collocation Space it is requesting. If Comcast Phone's application does not indicate their desire to construct their own enclosure and Comcast Phone subsequently decides to construct its own enclosure prior to BellSouth's Application Response, then Comcast Phone will resubmit its application, indicating its desire to construct its own enclosure. BellSouth shall complete its review within fifteen (15) days after BellSouth's receipt of Comcast Phone's plans and specifications. Regardless of whether or not BellSouth elects to review Comcast Phone's plans and specifications, BellSouth reserves the right to inspect the enclosure after construction to make sure it is constructed according to the submitted plans and specifications and/or BellSouth's wire mesh enclosure specifications, as applicable. If BellSouth decides to inspect the constructed Remote Collocation Space, BellSouth will complete its inspection within fifteen (15) days after receipt of Comcast Phone's written notification that the enclosure has been completed. BellSouth shall require Comcast Phone, at Comcast Phone's expense, to remove or correct within seven (7) days after BellSouth has completed its inspection of Comcast Phone's caged Remote Collocation Space, any structure that does not meet Comcast Phone's plans and specifications or BellSouth's wire mesh enclosure specifications, as applicable.

3.3 Shared Caged Collocation. Comcast Phone may allow other telecommunications carriers to sublease Comcast Phone's Remote Collocation Space pursuant to terms and conditions agreed to by Comcast Phone ("Host") and other telecommunications carriers ("Guests") and pursuant to this Section, except where the BellSouth Remote Site Location is located within a leased space and BellSouth is prohibited by said lease from offering such an option or is located on property for which BellSouth holds an easement and such easement does not permit such an option. Comcast Phone shall notify BellSouth in writing upon execution of any agreement between the Host and its Guest prior to any application. Further, such notice shall include the name of the Guest(s) and the term of the agreement, and shall contain a certification by Comcast Phone that said agreement imposes upon the Guest(s) the same terms and conditions for Remote Collocation Space as set forth in this Attachment between BellSouth and Comcast Phone.

3.3.1 Comcast Phone, as the Host, shall be the sole interface and responsible Party to BellSouth for assessment of rates and charges contained within this Attachment and for the purposes of ensuring that the safety and security requirements of this Attachment are fully complied with by the Guest, its employees and agents. BellSouth shall provide Comcast Phone with a proration of the costs of the Remote Collocation

Space based on the number of collocators and the space used by each. BellSouth will not allocate less than one (1) bay per Host/Guest. In those instances where the Host permits a Guest to use a shelf within the Host's bay, BellSouth will not prorate the cost of the bay. In all states other than Florida, and in addition to the foregoing, Comcast Phone shall be the responsible Party to BellSouth for the purpose of submitting applications for bay placement for the Guest. In Florida the Guest may submit its own initial bay placement applications using the Host's access carrier name abbreviation (ACNA). A separate Guest application shall require the assessment of an Application Fee, as set forth in Exhibit B, which will be charged to the Host. BellSouth shall bill this nonrecurring fee on the date that BellSouth provides it written Application Response to the Guest(s) bona fide application.

3.3.2 Notwithstanding the foregoing, the Guest may arrange directly with BellSouth for the provision of the interconnecting facilities between BellSouth and the Guest and for the provision of the services, and/or access to UNEs. The bill for these interconnecting facilities, services and access to UNEs will be charged to the Guest pursuant to the applicable BellSouth tariff or the Guest's Interconnection Agreement with BellSouth.

3.3.3 Comcast Phone shall indemnify and hold harmless BellSouth from any and all claims, actions, causes of action, of whatever kind or nature arising out of the presence of Comcast Phone's Guest(s) in the Remote Collocation Space except to the extent caused by BellSouth's sole negligence, gross negligence, or willful misconduct.

3.4 Adjacent Collocation. Subject to technical feasibility and space availability, BellSouth will permit an adjacent Remote Site collocation arrangement ("Adjacent Arrangement") on the property on which BellSouth's Remote Site is located when space within the Remote Site Location is legitimately exhausted, where the Adjacent Arrangement does not interfere with access to existing or planned structures or facilities on the Remote Site Location property. The Adjacent Arrangement shall be constructed or procured by Comcast Phone and in conformance with BellSouth's design and construction specifications. Further, Comcast Phone shall construct, procure, maintain and operate said Adjacent Arrangement pursuant to all of the terms and conditions set forth in this Attachment. Rates shall be negotiated at the time of the application for the Adjacent Arrangement.

3.4.1 Should Comcast Phone elect Adjacent Collocation, Comcast Phone must arrange with a BellSouth Certified Supplier to construct or procure an Adjacent Arrangement structure in accordance with BellSouth's specifications. Where local building codes require specifications more stringent than BellSouth's own specifications, Comcast Phone and Comcast Phone's BellSouth Certified Supplier must comply with local building code requirements. Comcast Phone's BellSouth Certified Supplier shall be responsible for filing and obtaining any and all necessary zoning, permits and/or licenses for such construction. Comcast Phone's BellSouth Certified Supplier shall bill Comcast Phone directly for all work performed for Comcast Phone pursuant to this Attachment and BellSouth shall have no liability for nor responsibility to pay such

charges imposed by Comcast Phone's BellSouth Certified Supplier. Comcast Phone must provide the local BellSouth Remote Site Location contact with two cards, keys or other access device used to enter the locked enclosure. Except in cases of emergency, BellSouth shall not access Comcast Phone's locked enclosure prior to notifying Comcast Phone at least forty-eight (48) hours or two (2) business days, whichever is greater, before access to the locked enclosure is required.

3.4.2 Comcast Phone must submit its plans and specifications to BellSouth with its firm order. BellSouth shall review Comcast Phone's plans and specifications prior to construction of an Adjacent Arrangement to ensure compliance with BellSouth's specifications. BellSouth shall complete its review within fifteen (15) days after receipt of plans and specifications. BellSouth may inspect the Adjacent Arrangement during and after construction to confirm it is constructed according to the submitted plans and specifications. If BellSouth decides to inspect the completed Adjacent Arrangement, BellSouth will complete its inspection within fifteen (15) days after receipt of Comcast Phone's written notification that the Adjacent Arrangement has been completed. BellSouth shall require Comcast Phone, at Comcast Phone's expense, to remove or correct within seven (7) days after BellSouth has completed its inspection of Comcast Phone's Adjacent Arrangement, any structure that does not meet its submitted plans and specifications or, BellSouth's specifications, as applicable.

3.4.3 Comcast Phone shall provide a concrete pad, the structure housing the Adjacent Arrangement, HVAC, lighting, and all facilities that connect the structure (i.e. racking, conduits, etc.) to the BellSouth point of demarcation. At Comcast Phone's option, and where the local authority having jurisdiction permits, BellSouth shall provide an AC power source and access to physical collocation services and facilities subject to the same nondiscriminatory requirements as applicable to any other physical collocation arrangement. In Alabama and Louisiana, at Comcast Phone's request and expense, BellSouth will provide DC power to an Adjacent Collocation site where technically feasible, as that term has been defined by the FCC, and in accordance with applicable law, BellSouth will provide DC power in an Adjacent Arrangement provided that such provisioning can be done in compliance with the National Electric Code (NEC), any and all safety and local codes, such as, but not limited to, local zoning codes, and upon completion of negotiations between the Parties on the applicable rates and intervals. Comcast Phone will pay for any and all (100%) DC power construction and provisioning costs to an Adjacent Arrangement through individual case basis (ICB) pricing that must be paid as follows: fifty percent (50%) before the DC installation work begins, and fifty percent (50%) at completion of the DC installation work to the Adjacent Arrangement. Comcast Phone's BellSouth Certified Supplier shall be responsible, at Comcast Phone's expense, for filing and receiving any and all necessary zoning, permits and/or licenses for such arrangement. BellSouth shall allow Shared caged Host/Guest collocation within an Adjacent Arrangement pursuant to the terms and conditions set forth herein.

3.5 Co-Carrier Cross-Connects (CCXCs). A Co-Carrier Cross Connect (CCXC) is a cross connection between Comcast Phone and another collocated telecommunications carrier, other than BellSouth, in the same BellSouth Remote Site Location. BellSouth will permit Comcast Phone to interconnect between its Remote Collocation Space(s) and Remote Collocation Space(s) of another (or other) collocated telecommunications carrier(s) within the same BellSouth Remote Site Location via a CCXC, pursuant to FCC Rules. The other collocated telecommunications carrier's agreement must also contain CCXC rates, terms and conditions before BellSouth will permit the provisioning of CCXC between the two collocated carriers. The applicable BellSouth charges will be assessed to the collocated telecommunications carrier that requests the CCXC. Comcast Phone is prohibited from using the Remote Collocation Space for the sole or primary purpose of cross-connecting to other collocated telecommunications carriers.

3.5.1 Comcast Phone must contract with a BellSouth Certified Supplier to place the CCXC. The CCXC shall be provisioned using facilities owned by Comcast Phone. Such cross-connections to other collocated telecommunications carriers may be made using either optical or electrical facilities. Comcast Phone shall be responsible for providing a letter of authorization (LOA), with the application, to BellSouth from the other collocated telecommunications carrier to which it will be cross-connecting. The CCXC shall utilize BellSouth common cable support structure. . There will be a recurring charge per linear foot, per cable, of the common cable support structure used by Comcast Phone to provision the CCXC to the other collocated telecommunications carrier. In those instances where Comcast Phone's equipment and the equipment of the other collocated telecommunications carrier are located in contiguous caged Remote Collocation Spaces, Comcast Phone may use its own technicians to install the co-carrier cross connects using either electrical or optical facilities between the sets of equipment of both collocated telecommunications carriers by constructing a dedicated cable support structure between the two contiguous cages. Comcast Phone shall deploy such optical or electrical cross-connections directly between its own equipment and the equipment of the other collocated telecommunications carrier without being routed through BellSouth's equipment or, in the case of a CCXC provisioned between contiguous collocation spaces, common cable support structure. Comcast Phone shall not provision CCXC on any BellSouth distribution frame, POT (Point of Termination) Bay, DSX (Digital System Cross-connect) panel or LGX (Light Guide Cross-connect) panel. Comcast Phone is solely responsible for ensuring the integrity of the signal.

3.5.2 To place an order for a CCXC, Comcast Phone must submit an application to BellSouth. If no modification to the Remote Collocation Space is requested other than the placement of a CCXC, the Co-Carrier Cross Connect Application Fee for a CCXC, as defined in Exhibit B, will apply. If other modifications are requested, in addition to the placement of a CCXC, the Application Fee will apply. BellSouth will bill this nonrecurring charge on the date that it provides an Application Response to Comcast Phone.

## 4. Occupancy

4.1 Space Ready Date. BellSouth will notify Comcast Phone in writing that the Remote Collocation Space is ready for occupancy ("Space Ready Date").

4.2 Acceptance Walk Through. Comcast Phone will schedule and complete an acceptance walkthrough of each Remote Collocation Space with BellSouth within fifteen (15) days after BellSouth notifies Comcast Phone that Remote Collocation Space is ready for occupancy (“Space Ready Date”). BellSouth will correct any deviations to Comcast Phone’s original or jointly amended requirements within seven (7) days after the walkthrough, unless the Parties jointly agree upon a different time frame, and BellSouth shall establish a new Space Ready Date. Another acceptance walkthrough will then be scheduled and conducted within fifteen (15) days after the new Space Ready Date. This follow-up acceptance walkthrough will be limited to those items identified in the initial walkthrough. If Comcast Phone completes its acceptance walkthrough within the fifteen (15) day interval(s) associated with the applicable Space Ready Date, billing will begin upon the date of Comcast Phone’s acceptance of the Remote Collocation Space (“Space Acceptance Date”). In the event that Comcast Phone fails to complete an acceptance walkthrough within this fifteen (15) day interval, the Remote Collocation Space shall be deemed accepted by Comcast Phone on the Space Ready Date and billing will commence from that date.

4.3 Early Space Acceptance. If Comcast Phone decides to occupy the Remote Collocation Space prior to the Space Ready Date, the date Comcast Phone occupies the space is deemed the Space Acceptance Date and billing will begin from that date. Comcast Phone must notify BellSouth in writing that its collocation equipment installation is complete. Comcast Phone’s collocation equipment installation is complete, which is when Comcast Phone’s equipment has been cross-connected to BellSouth’s network for the purpose of provisioning telecommunication services to Comcast Phone’s customers. BellSouth may, at its discretion, refuse to accept any orders for cross-connects until it has received such notice from Comcast Phone.

4.4 Termination of Occupancy. In addition to any other provisions addressing termination of occupancy in this Attachment, Comcast Phone may terminate occupancy in a particular Remote Collocation Space by submitting an application requesting termination of occupancy for such Remote Collocation Space. Such termination shall be effective upon BellSouth’s acceptance of the Space Relinquishment Form. Billing for monthly recurring charges will cease on the date Comcast Phone and BellSouth conduct an inspection of the terminated space and jointly sign off on the Space Relinquishment Form or on the date that Comcast Phone signs off on the Space Relinquishment Form and sends the form to BellSouth if a subsequent inspection of the terminated space by BellSouth reveals no discrepancies. If the subsequent inspection by BellSouth reveals any discrepancies, billing will cease on the date that BellSouth and Comcast Phone jointly conduct an inspection, which confirms that Comcast Phone has corrected the discrepancies. An Application Fee will not apply for

termination of occupancy. BellSouth may terminate Comcast Phone's right to occupy the Remote Collocation Space in the event Comcast Phone fails to comply with any provision of this Agreement, for such Remote Collocation Space..

4.4.1 Upon termination of occupancy, Comcast Phone, at its sole expense, shall remove its equipment and other property from the Remote Collocation Space. Comcast Phone shall have thirty (30) days from the BFFO date ("Termination Date") to complete such removal, including the removal of all equipment and facilities of Comcast Phone's Guest(s), unless Comcast Phone's Guest(s) has assumed responsibility for the Remote Collocation Space housing the Guest(s)'s equipment and executed the appropriate documentation required by BellSouth to transfer the Remote Collocation Space to the Guest(s) prior to Comcast Phone's Termination Date.

4.4.2 Comcast Phone shall continue payment of all monthly recurring charges to BellSouth until the date Comcast Phone, and if applicable Comcast Phone's Guest(s), has fully vacated the Remote Collocation Space and the Space Relinquish Form has been accepted by BellSouth. If Comcast Phone or Comcast Phone's Guest(s) fails to vacate the Remote Collocation Space within thirty (30) days from the Termination Date, BellSouth shall have the right to remove and dispose of the equipment and any other property of Comcast Phone or Comcast Phone's Guest(s), in any manner that BellSouth deems fit, at Comcast Phone's expense and with no liability whatsoever for Comcast Phone's property or Comcast Phone's Guest(s)'s property.

4.4.3 Upon termination of Comcast Phone's right to occupy Remote Collocation Space, the Remote Collocation Space will revert back to BellSouth, and Comcast Phone shall surrender such Remote Collocation Space to BellSouth in the same condition as when it was first occupied by Comcast Phone, with the exception of ordinary wear and tear, unless otherwise agreed to by the Parties. For CEVs and huts, Comcast Phone's BellSouth Certified Supplier shall be responsible for updating and making any necessary changes to BellSouth's records as required by BellSouth specifications including, but not limited to, Record Drawings and ERMA Records. Comcast Phone shall be responsible for the cost of removing any Comcast Phone constructed enclosure, as well as any support structures (e.g., racking, conduits, power cables, etc.), by the Termination Date and restoring the grounds to their original condition.

## 5. Use of Remote Collocation Space

5.1 Equipment Type. BellSouth permits the collocation and use of any type of equipment that is necessary and will be used primarily for interconnection to BellSouth's network or for access to UNEs in the provision of telecommunications services, as the term "necessary" is defined by FCC 47 C.F.R. Section 51.323 (b). Equipment is necessary for interconnection if an inability to deploy that equipment would, as a practical, economical, or operational matter, preclude the requesting carrier from obtaining interconnection with BellSouth at a level equal in quality to that which BellSouth

obtains within its own network or what BellSouth provides to any affiliate, subsidiary, or other party.

5.1.1 Examples of equipment that would not be considered necessary include but are not limited to: traditional circuit switching equipment, equipment used exclusively for call-related databases, computer servers used exclusively for providing information services, operations support system (OSS) equipment used to support collocated telecommunications carrier network operations, equipment that generates customer orders, manages trouble tickets or inventory, or stores customer records in centralized databases, etc. BellSouth will determine upon receipt of an application if the requested equipment is necessary based on the criteria established by the FCC. Multifunctional equipment placed on BellSouth's Premises must not place any greater relative burden on BellSouth's property than comparable single-function equipment. BellSouth reserves the right to permit collocation of any equipment on a nondiscriminatory basis.

5.1.2 Such equipment must, at a minimum, meet the following Telcordia Network Equipment Building Systems (NEBS) General Equipment Requirements: Criteria Level 3 requirements as outlined in the Telcordia Special Report SR-3580, Issue 1. Except where otherwise required by a Commission, BellSouth shall comply with the applicable FCC rules relating to denial of collocation equipment based on Comcast Phone's failure to comply with this Section.

5.1.2.1 All Comcast Phone equipment installation shall comply with BellSouth TR 73503-11h, "Grounding - Engineering Procedures". Metallic cable sheaths and metallic strength members of optical fiber cables as well as the metallic cable sheaths of all copper conductor cables shall be bonded to the designated grounding bus for the Remote Site Location. All copper conductor pairs, working and non-working, shall be equipped with a solid-state protector unit (over-voltage protection only), which has been listed by a nationally recognized testing laboratory.

5.1.3 Comcast Phone shall identify to BellSouth whenever Comcast Phone submits a Method of Procedure ("MOP") adding equipment to Comcast Phone's Remote Collocation Space all UCC-1 lien holders or other entities that have a financial interest, secured or otherwise, in the equipment in Comcast Phone's Remote Collocation Space. Comcast Phone shall submit a copy of the list of any lien holders or other entities that have a financial interest to Comcast Phone's ATCC Representative.

5.2 <u>No Marketing.</u> Comcast Phone shall not use the Remote Collocation Space for marketing purposes nor shall it place any identifying signs or markings in the area surrounding the Remote Collocation Space or on the grounds of the Remote Site Location.

5.3 <u>Equipment Identification.</u> Comcast Phone shall place a plaque or affix other identification (e.g., stenciling or labeling) to each piece of Comcast Phone's

equipment, including the appropriate emergency contacts with their corresponding telephone numbers, in order for BellSouth to properly identify Comcast Phone's equipment in the case of an emergency. For caged Remote Collocation Space, such identification must be placed on a plaque affixed to the outside of the caged enclosure.

5.4 Entrance Facilities. Comcast Phone may elect to place Comcast Phone-owned or Comcast Phone-leased fiber entrance facilities into the Remote Collocation Space. BellSouth will designate the point of interconnection at the Remote Site Location housing the Remote Collocation Space, which is physically accessible by both Parties. Comcast Phone will provide and place copper cable through conduit from the Remote Collocation Space to the feeder distribution interface to the splice location of sufficient length for splicing by BellSouth. Comcast Phone must contact BellSouth for authorization and instruction prior to placing any entrance facility cable. Comcast Phone is responsible for maintenance of the entrance facilities that terminate into Comcast Phone's Remote Collocation Space.

5.5 Shared Use. Comcast Phone may utilize spare capacity on an existing telecommunications carrier's entrance facility for the purpose of obtaining an entrance facility to Comcast Phone's Remote Collocation Space within the same BellSouth Remote Site Location.

5.6 Demarcation Point. BellSouth will designate the point(s) of demarcation between Comcast Phone's equipment and/or network facilities and BellSouth's network facilities. Each Party will be responsible for maintenance and operation of all equipment/facilities on its side of the demarcation point. Comcast Phone or its agent must perform all required maintenance to Comcast Phone equipment/facilities on its side of the demarcation point, pursuant to Section 5.7, following.

5.7 Equipment and Facilities. Comcast Phone, or if required by this Attachment, Comcast Phone's BellSouth Certified Supplier, is solely responsible for the design, engineering, installation, testing, provisioning, performance, monitoring, maintenance and repair of the equipment and network facilities used by Comcast Phone which must be performed in compliance with all applicable BellSouth specifications. Such equipment and network facilities may include but are not limited to cable(s), equipment, and point of termination connections. Comcast Phone and its selected BellSouth Certified Supplier must follow and comply with all BellSouth specifications outlined in the following BellSouthTechnical Requirements: TR 73503, TR 73519, TR 73572, and TR 73564.

5.8 BellSouth Access. From time to time BellSouth may require access to the Remote Collocation Space. BellSouth retains the right to access the Remote Collocation Space for the purpose of making BellSouth equipment and Remote Site Location modifications. Except in case of emergency, BellSouth will give notice to Comcast Phone at least forty-eight (48) hours before access to the Remote Collocation Space is required. Comcast Phone may elect to be present whenever BellSouth performs work in the Remote Collocation Space. The Parties agree that Comcast Phone will not bear

any of the expense associated with this work. In the case of an emergency, BellSouth will provide oral notice of entry as soon as possible and, upon request, will provide subsequent written notice.

5.9 Customer Access. Pursuant to Section 12, Comcast Phone shall have access to its Remote Collocation Space twenty-four (24) hours a day, seven (7) days a week. Comcast Phone agrees to provide the name and social security number, date of birth, or driver's license number of each employee, supplier, or agent of Comcast Phone or Comcast Phone's Guest(s) with Comcast Phone's written request for access keys or cards (Access Devices) for specific BellSouth Premises, prior to the issuance of said Access Devices, using Form RF-2906-C, the "CLEC and CLEC Certified Supplier Access Request and Acknowledgement" form. The appropriate key acknowledgement forms (the "Collocation Acknowledgement Sheet" for access cards and the "Key Acknowledgement Form" for keys) must be signed by Comcast Phone and returned to BellSouth Access Management within fifteen (15) days of Comcast Phone's receipt of these forms. Failure to return these properly acknowledged forms will result in the subsequent access key or card requests being held by BellSouth until the proper acknowledgement documents have been received by BellSouth and reflect current information. Access Devices may not be duplicated under any circumstances. Comcast Phone agrees to be responsible for all Access Devices and for the return of all Access Devices in the possession of Comcast Phone's employees, suppliers, agents, or Guests after termination of the employment relationship, the contractual obligation with Comcast Phone ends, upon the termination of this Agreement, or upon the termination of occupancy of Remote Collocation Space in a specific BellSouth Premises. Comcast Phone shall pay all applicable charges associated with lost or stolen Access Devices.

5.9.1 BellSouth will permit one (1) accompanied site visit, which will be limited to no more than one hour, to Comcast Phone's designated Remote Collocation Space, after receipt of the BFFO, without charge to Comcast Phone. Comcast Phone must submit to BellSouth the completed Access Control Request Form for all employees, suppliers, agents or Guests requiring access to a BellSouth Premises at least thirty (30) days prior to the date Comcast Phone desires to gain access to the Remote Collocation Space. In order to permit reasonable access during construction of the Remote Collocation Space, Comcast Phone may submit a request for its one (1) free accompanied site visit to its designated Remote Collocation Space at any time subsequent to BellSouth's receipt of the BFFO. In the event Comcast Phone desires access to its designated Remote Collocation Space after the first accompanied free visit and Comcast Phone's access request form(s) has not been approved by BellSouth or Comcast Phone has not yet submitted an access request form to BellSouth, Comcast Phone shall be permitted to access the Remote Collocation Space accompanied by a BellSouth security escort, at Comcast Phone's expense, which will be assessed pursuant to the Security Escort fees contained in Exhibit B. Comcast Phone must request that escorted access be provided by BellSouth to Comcast Phone's designated Remote Collocation Space at least three (3) business days prior to

the date such access is desired. A BellSouth security escort will be required whenever Comcast Phone or its approved agent or supplier requires access to the entrance manhole.

5.10 Lost or Stolen Access Keys. Comcast Phone shall notify BellSouth in writing immediately in the case of lost or stolen Access Keys. Should it become necessary for BellSouth to re-key Remote Site Locations or deactivate a card as a result of a lost Access Key(s) or for failure to return an Access Key(s), Comcast Phone shall pay for all reasonable costs associated with the re-keying or deactivating the device(s).

5.11 Interference or Impairment. Notwithstanding any other provisions of this Attachment, Comcast Phone shall not use any product or service provided under this Agreement, any other service related thereto or used in combination therewith, or place or use any equipment and facilities in any manner that 1) significantly degrades, interferes with or impairs service provided by BellSouth or by any other entity or any person's use of its telecommunications service; 2) endangers or damages the equipment, facilities or other property of BellSouth or of any other entity or person; 3) compromises the privacy of any communications routed through the Remote Site; or 4) creates an unreasonable risk of injury or death to any individual or to the public. If BellSouth reasonably determines that any equipment or facilities of Comcast Phone violates the provisions of this paragraph, BellSouth shall provide written notice to Comcast Phone, which shall direct Comcast Phone to cure the violation within forty-eight (48) hours of Comcast Phone's receipt of written notice or, if such cure is not feasible, at a minimum, to commence curative measures within twenty-four (24) hours and exercise reasonable diligence to complete such measures as soon as possible thereafter. After receipt of the notice, the Parties agree to consult immediately and, if necessary, to conduct the inspection of the Remote Collocation Space.

5.11.1 Except in the case of the deployment of an advanced service which significantly degrades the performance of other advanced services or traditional voice band services, if Comcast Phone fails to take cure the violation within forty-eight (48) hours or, if such cure is not possible, to commence curative action within twenty-four (24) hours and exercise reasonable diligence to complete such action as soon as possible, or if the violation is of a character which poses an immediate and substantial threat of damage to property or injury or death to any person, or any other significant degradation, interference or impairment of BellSouth's or another entity's service, then and only in that event, BellSouth may take such action as it deems necessary to eliminate such threat including, without limitation, the interruption of electrical power to Comcast Phone's equipment and/or facilities. BellSouth will endeavor, but is not required, to provide notice to Comcast Phone prior to the taking of such action and BellSouth shall have no liability to Comcast Phone for any damages arising from such action, except to the extent that such action by BellSouth constitutes willful misconduct.

5.11.2 For purposes of this Section, the term "significantly degrades" shall be defined as an action that noticeably impairs a service from a user's perspective. In the case of the deployment of an advanced service which significantly degrades the performance of other advanced services or traditional voice band services and Comcast Phone fails to take curative action within forty-eight (48) hours, or such cure is not possible, to commence curative action within twenty-four (24) hours and exercise reasonable diligence to complete such action as soon as possible, BellSouth will establish before the appropriate Commission that the technology deployed is causing the significant degradation. Any claims of network harm presented to Comcast Phone or, if subsequently necessary, the Commission must be provided by BellSouth with specific and verifiable information. Where BellSouth demonstrates that a certain technology deployed by Comcast Phone is significantly degrading the performance of other advanced services or traditional voice band services, Comcast Phone shall discontinue deployment of that technology and migrate its customers to other technologies that will not significantly degrade the performance of such services. Where the only degraded service itself is a known disturber, and the newly deployed technology satisfies at least one of the criteria for a presumption that it is acceptable for deployment, pursuant to 47CFR, Section 51.230 of the FCC's Rules, the degraded service shall not prevail against the newly-deployed technology.

5.12 Personalty and Its Removal. Facilities and equipment placed by Comcast Phone in the Remote Collocation Space shall not become a part of the Remote Site Location, even if nailed, screwed or otherwise fastened to the Remote Collocation Space but shall retain their status as personal property and may be removed by Comcast Phone at any time. Any damage caused to the Remote Collocation Space by Comcast Phone's employees, suppliers, agents or Guests during the installation or removal of such property shall be promptly repaired by Comcast Phone at its sole expense.

5.13 Alterations. Under no condition shall Comcast Phone or any person acting on behalf of Comcast Phone make any rearrangement, modification, augment, improvement, addition, and/or other alteration which could affect in any way space, power, HVAC, and/or safety considerations to the Remote Collocation Space or the BellSouth Remote Site Location, hereinafter referred to individually or collectively as "Alterations", without the express written consent of BellSouth, which shall not be unreasonably withheld. The cost of any such Alteration shall be paid by Comcast Phone. An Alteration shall require the submission of an application and Application Fee. BellSouth will bill the nonrecurring fee on the date that BellSouth provides Comcast Phone with an Application Response.

5.14 Upkeep of Remote Collocation Space. Comcast Phone shall be responsible for the general upkeep and cleaning of the Remote Collocation Space. Comcast Phone shall be responsible for removing any of Comcast Phone's debris from the Remote Collocation Space and from in and around the Remote Site Location on each visit.

## 6. Ordering and Preparation of Remote Collocation Space

6.1 Procedures and Intervals. Should any state or federal regulatory agency impose procedures or intervals applicable to Comcast Phone and BellSouth that are different from procedures or intervals set forth in this Section, whether now in effect or that become effective after execution of this Attachment, those procedures or intervals shall supersede the requirements set forth herein for that jurisdiction for all applications submitted after the effective date thereof.

6.2 Remote Site Application. When Comcast Phone or Comcast Phone's Guest(s) desires to install a bay in a Remote Site Location, Comcast Phone shall input a BellSouth Physical Expanded Interconnection Application Document ("Application") directly into BellSouth's electronic application (e.App) system for processing. The Application is considered Bona Fide when it is complete and accurate, meaning that all of the required fields on the Application are completed with the appropriate type of information. An Application Fee, as set forth in Exhibit B, will apply to each Application submitted by Comcast Phone and will be billed on the date BellSouth provides Comcast Phone with an Application Response. The placement of an additional bay at a later date will be treated in the same fashion and an Application will be required. The installation of additional shelves/equipment, subject to the restrictions contained in Section 5.7, within an existing bay, does not require an Application.

6.3 Availability of Space. Upon submission of an Application, BellSouth will permit Comcast Phone to physically collocate, pursuant to the terms of this Attachment, at any BellSouth Remote Site Location, unless BellSouth has determined that there is no space available due to space limitations or that collocation at the Remote Site Location is not practical for technical reasons. In the event space is not immediately available at a Remote Site Location, BellSouth reserves the right to make additional space available, in which case the conditions in Section 7 shall apply, or BellSouth may elect to deny space in accordance with this Section, in which case, virtual or adjacent collocation options may be available. If the amount of space requested is not available, BellSouth will notify Comcast Phone of the amount that is available.

6.4 Space Availability Notification. For all states except Florida and Tennessee, BellSouth will respond to an Application within ten (10) days as to whether space is available or not available within a BellSouth Remote Site Location. . In Florida and Tennessee, BellSouth will respond to an Application within fifteen (15) days as to whether space is available or not available within a BellSouth Premises. BellSouth's e.App system will reflect when Comcast Phone's Application is Bona Fide. If the Application cannot be Bona Fide, BellSouth will identify what revisions are necessary for the Application to become Bona Fide. If the amount of space requested is not available, BellSouth will notify Comcast Phone of the amount of space that is available and no Application fee will apply. When BellSouth's response includes an amount of space less than that requested by Comcast Phone or space that is configured differently, no Application

Fee shall apply. If Comcast Phone decides to accept the available space, Comcast Phone must resubmit its Application to reflect the actual space available, including the configuration of the space, prior to submitting a BFFO. When Comcast Phone resubmits its Application to accept the available space, BellSouth will bill Comcast Phone the appropriate Application Fee.

6.5 Denial of Application. If BellSouth notifies Comcast Phone that no space is available (Denial of Application), BellSouth will not assess an Application Fee to Comcast Phone. After notifying Comcast Phone that BellSouth has no available space in the requested Remote Site Location, BellSouth will allow Comcast Phone, upon request, to tour the Remote Site Location within ten (10) days of such Denial of Application. In order to schedule this tour within ten (10) days, BellSouth must receive the request for the tour of the Remote Site Location within five (5) days of the Denial of Application.

6.6 Petition for Waiver. Upon Denial of Application, BellSouth will timely file a petition with the appropriate Commission pursuant to 47 U.S.C. § 251(c)(6). BellSouth shall provide to the Commission any information requested by that Commission. Such information shall include which space, if any, BellSouth or any of BellSouth's affiliates have reserved for future use and a detailed description of the specific future uses for which the space has been reserved. Subject to an appropriate nondisclosure agreement or provision, BellSouth shall permit Comcast Phone to inspect any plans or diagrams that BellSouth provides to the Commission.

6.7 Waiting List. On a first-come, first-served basis, which is governed by the date of receipt of an application or Letter of Intent, BellSouth will maintain a waiting list of requesting telecommunications carriers who have either received a Denial of Application or, where it is publicly known that a Remote Site Location is out of space, have submitted a Letter of Intent to collocate in that Remote Site Location. BellSouth will notify the telecommunications carriers on the waiting list that can be accommodated by the amount of space that becomes available according to the position of the telecommunications carriers on said waiting list.

6.7.1 In Florida, on a first-come, first-served basis, which is governed by the date of receipt of an application or Letter of Intent, BellSouth will maintain a waiting list of requesting telecommunications carriers that have either received a Denial of Application or, where it is publicly known that a Remote Site Location is out of space, have submitted a Letter of Intent to collocate in that Remote Site Location. Sixty (60) days prior to Remote Collocation Space becoming available, if known, BellSouth will notify the Commission and the telecommunications carriers on the waiting list by mail when space will become available. If BellSouth does not know sixty (60) days in advance of when Remote Collocation Space will become available, BellSouth will notify the Commission and the telecommunications carriers on the waiting list within two (2) business days of the determination that space will become available.

6.7.2 When Remote Collocation Space becomes available, Comcast Phone must submit an updated, complete, and accurate Application to BellSouth within thirty (30) days of such notification that Remote Collocation Space will be available in the requested Remote Site Location previously out of space. If Comcast Phone has originally requested caged Remote Collocation Space and cageless Remote Collocation Space becomes available, Comcast Phone may refuse such space and notify BellSouth in writing, within the thirty (3) day timeframe referenced above, that Comcast Phone wishes to maintain its place on the waiting list for caged Remote Collocation Space, without accepting the available cageless Remote Collocation Space. Comcast Phone may accept an amount of space less than what it originally requested by submitting an Application as set forth above, and, upon request, may maintain its position on the waiting list for the remaining space that was initially requested. If Comcast Phone does not submit an Application or notify BellSouth in writing within the thirty (3) day timeframe as described above, BellSouth will offer the available Remote Collocation Space to the next telecommunications carrier on the waiting list and remove Comcast Phone from the waiting list. Upon request, BellSouth will advise Comcast Phone as to its position on the waiting list for a particular Remote Site Location.

6.8 Public Notification. BellSouth will maintain on its Interconnection Services Web site, www.interconnection.bellsouth.com, a notification document that will indicate all Remote Site Locations that are without available space. BellSouth shall update such document within ten (10) days of the date that BellSouth becomes aware that there is insufficient space to accommodate collocation at the Remote Site Location. BellSouth will also post a document on its Interconnection Services website that contains a general notice where space has become available in a Remote Site Location previously on the space exhaust list.

6.9 Application Response.

6.9.1 In Florida and Tennessee, within fifteen (15) days of receipt of a Bona Fide Application, when Remote Collocation Space has been determined to be available or when a lesser amount of space than that requested is available, then with respect to the Remote Collocation Space available, BellSouth will provide an Application Response including sufficient information to enable Comcast Phone to place a firm order. The Application Response will include, at a minimum, the configuration of the space, the Cable Installation Fee, the Cable Records Fee, and any other applicable space preparation fees, as described in Section 8. When Comcast Phone submits ten (10) or more Applications within ten (10) days, the initial fifteen (15) day response interval will increase by ten (10) days for every additional ten (10) Applications or fraction thereof.

6.9.2 In Alabama, Georgia, Kentucky, Louisiana, Mississippi, North Carolina, and South Carolina, when Remote Collocation Space has been determined to be available, BellSouth will provide an Application Response within twenty (20) days of receipt of a Bona Fide Application. The Application Response will be a written response that includes sufficient information to enable Comcast Phone to place a firm order, which,

at a minimum, will include the configuration of the space, the Cable Installation Fee, the Cable Records Fee, and any other applicable space preparation fees, as described in Section 8.

6.10 Application Modifications. If a modification or revision is made to any information in the Bona Fide Application prior to a BFFO, with the exception of modifications to (1) Customer Information, (2) Contact Information or (3) Billing Contact Information, whether at the request of Comcast Phone or as necessitated by technical considerations, the Application shall be considered a new Application and handled as a new Application with respect to the response and provisioning intervals. BellSouth will charge Comcast Phone the Application Fee as set forth in Exhibit B. BellSouth will bill the nonrecurring fee on the date that BellSouth provides an Application Response.

6.11 Bona Fide Firm Order.

6.11.1 Comcast Phone shall indicate its intent to proceed with equipment installation in a BellSouth Remote Site Location by submitting a BFFO to BellSouth. The BFFO must be received by BellSouth no later than thirty (30) days after BellSouth's Application Response to Comcast Phone's Bona Fide Application or Comcast Phone's Application will expire.

6.11.2 BellSouth will establish a Firm Order date based upon the date BellSouth is in receipt of Comcast Phone's BFFO. BellSouth will acknowledge the receipt of Comcast Phone's BFFO within seven (7) days of receipt, so that Comcast Phone will have positive confirmation that its BFFO has been received. BellSouth's response to a BFFO will include a Firm Order Confirmation, which contains the firm order date. No revisions may be made to a BFFO.

## 7. Construction and Provisioning

7.1 Construction and Provisioning Intervals.

7.1.1 In Florida and Tennessee, BellSouth will complete construction for Remote Collocation Space as soon as possible within a maximum of ninety (90) days from receipt of a BFFO or as agreed to by the Parties. For Alterations requested to Remote Collocation Space after the initial space has been completed, BellSouth will complete construction for Remote Collocation Space as soon as possible within a maximum of forty-five (45) days from receipt of a BFFO or as agreed to by the Parties, as long as no additional space has been requested by Comcast Phone, If additional space has been requested by Comcast Phone, BellSouth will complete construction for the requested Remote Collocation Space as soon as possible within a maximum of ninety (90) days from receipt of a BFFO for physical Remote Collocation Space and forty five (45) days from receipt of a BFFO for virtual Remote Collocation Space. If BellSouth does not believe that construction will be completed within the relevant provisioning interval and BellSouth and Comcast Phone cannot agree upon a completion date,

within forty-five (45) days of receipt of the BFFO for an initial request, or within thirty (30) days of receipt of the BFFO for an Alteration, BellSouth may seek an extension from the Commission.

7.1.2 In Alabama, Georgia, Kentucky, Louisiana, Mississippi, North Carolina, and South Carolina, BellSouth will complete construction for Remote Collocation Space under ordinary conditions as soon as possible within a maximum of sixty (60) days from receipt of a BFFO and ninety (90) days from receipt of a BFFO for extraordinary conditions, or as agreed to by the Parties. Ordinary conditions are defined as space available with only minor changes required to BellSouth's support systems. (Examples include, but are not limited to: minor modifications to HVAC, cabling and BellSouth's power plant). Extraordinary conditions, include, but may not be limited to: major BellSouth equipment rearrangements or additions; power plant additions or upgrades; major mechanical additions or upgrades; major upgrades for ADA compliance; environmental hazards or hazardous materials abatement; and arrangements for which equipment shipping intervals are extraordinary in length. The Parties may mutually agree to renegotiate an alternative provisioning interval for the Remote Collocation Space requested or BellSouth may seek a waiver from the interval, as set forth above, from the appropriate Commission, if BellSouth does not believe that construction will be completed within the relevant provisioning interval.

7.1.3 If BellSouth does not have space immediately available at a Remote Site Location, BellSouth may elect, but not be limited, to make additional space available by rearranging BellSouth facilities or constructing additional capacity. In such cases, the above intervals shall not apply and BellSouth will provision the Remote Collocation Space in a nondiscriminatory manner and at parity with BellSouth and will provide Comcast Phone with the estimated completion date in its Application Response.

7.2 Joint Planning. Unless otherwise agreed to by the Parties, a joint planning meeting or other method of joint planning between BellSouth and Comcast Phone will commence within a maximum of twenty (20) days from BellSouth's receipt of a BFFO. At such meeting, the Parties will agree to the preliminary design of the Remote Collocation Space and the equipment configuration requirements, as reflected in the Application and affirmed in the BFFO.

7.3 Permits. Each Party, its agent(s) or BellSouth Certified Supplier(s) will diligently pursue filing for the permits required for the scope of work to be performed by that Party, its agent(s) or BellSouth Certified Supplier(s) within ten (10) days of the completion of finalized construction designs and specifications.

7.4 Use of BellSouth Certified Supplier. Comcast Phone shall select a supplier, which has been approved as a BellSouth Certified Supplier to perform all construction, engineering (as specified in TR 73503), installation, and removal work. Comcast Phone, if a BellSouth Certified Supplier, or Comcast Phone's BellSouth Certified Supplier must follow and comply with all of BellSouth's specifications and the

following BellSouth Technical Requirements: TR 73503, TR 73519, TR 73572, and TR 73564. Unless the BellSouth Certified Supplier has met the requirements for all of the required work activities, Comcast Phone must use a different BellSouth Certified Supplier for the work activities associated with transmission equipment, switching equipment and power equipment. BellSouth shall provide Comcast Phone with a list of BellSouth Certified Suppliers, upon request. Comcast Phone, if a BellSouth Certified Supplier, or Comcast Phone's BellSouth Certified Supplier(s) shall be responsible for installing Comcast Phone's equipment and associated components, extending power cabling to the BellSouth power distribution frame, performing operational tests after installation is complete, and notifying BellSouth's equipment engineers and Comcast Phone upon successful completion of the installation and any associated work. When a BellSouth Certified Supplier is used by Comcast Phone, the BellSouth Certified Supplier shall bill Comcast Phone directly for all work performed for Comcast Phone pursuant to this Attachment. BellSouth shall have no liability for, nor responsibility to pay, such charges imposed by Comcast Phone's BellSouth Certified Supplier. BellSouth shall make available its supplier certification program to Comcast Phone or any supplier proposed by Comcast Phone and will not unreasonably withhold certification. All work performed by or for Comcast Phone shall conform to generally accepted industry standards.

7.5 Alarms and Monitoring. BellSouth may place alarms in the Remote Site Location for the protection of BellSouth equipment and facilities. Comcast Phone shall be responsible for the placement, monitoring and removal of environmental and equipment alarms used to service Comcast Phone's Remote Collocation Space. Upon request, BellSouth will provide Comcast Phone with applicable BellSouth tariffed service(s) to facilitate remote monitoring of collocated equipment by Comcast Phone. Both Parties shall use best efforts to notify the other of any verified environmental condition (e.g., temperature extremes or excess humidity) known to that Party.

7.6 Virtual to Physical Remote Collocation Space Relocation. In the event physical Remote Collocation Space was previously denied at a Remote Site Location due to technical reasons or space limitations and physical Remote Collocation Space has subsequently become available, Comcast Phone may relocate its existing virtual Remote Collocation Space(s) to physical Remote Collocation Space and pay the appropriate fees associated with the rearrangement or reconfiguration of the services being terminated into the virtual Remote Collocation Space. If BellSouth knows when additional physical Remote Collocation Space may become available at the Remote Site Location requested by Comcast Phone, such information will be provided to Comcast Phone in BellSouth's written denial of physical Remote Collocation Space. To the extent that (i) physical Remote Collocation Space becomes available to Comcast Phone within one hundred eighty (180) days of BellSouth's written denial of Comcast Phone's request for physical Remote Collocation Space, (ii) BellSouth had knowledge that the Remote Collocation Space was going to become available, and (iii) Comcast Phone was not informed in the written denial that physical Remote Collocation Space would become available within such one hundred eighty (180) day

period, then Comcast Phone may relocate its virtual Remote Collocation Space to a physical Remote Collocation Space and will receive a credit for any nonrecurring charges previously paid for such virtual Remote Collocation Space. Comcast Phone must arrange with a BellSouth Certified Supplier for the relocation of equipment from a virtual Remote Collocation Space to a physical Remote Collocation Space and will bear the cost of such relocation, including the costs associated with moving the services from the virtual Remote Collocation Space to the new physical Remote Collocation Space.

7.6.1 In Alabama, BellSouth will complete a relocation of a virtual Remote Collocation Space to a cageless physical Remote Collocation Space within sixty (60) days from BellSouth's receipt of a BFFO and from a virtual Remote Collocation Space to a caged physical Remote Collocation Space within ninety (90) days from BellSouth's receipt of a BFFO.

7.7 Virtual to Physical Conversion (In-Place). Virtual Remote Collocation Space may be converted to "in-place" physical caged Remote Collocation Space if the potential conversion meets all of the following criteria: 1) there is no change in the amount of equipment or the configuration of the equipment that was in the virtual Remote Collocation Space; 2) the conversion of the virtual Remote Collocation Space will not cause the equipment or the results of that conversion to be located in a space that BellSouth has reserved for its own future needs; and 3) any changes to the existing Remote Collocation Space can be accommodated by existing power, HVAC, and other requirements. Unless otherwise specified herein, BellSouth will complete virtual to physical Remote Collocation Space conversions (in-place) within sixty (60) days from receipt of the BFFO. BellSouth will bill Comcast Phone an Application Fee, as set forth in Exhibit B, on the date BellSouth provides an Application Response to Comcast Phone.

7.7.1 In Alabama and Tennessee, BellSouth will complete virtual to physical conversions (in-place) within thirty (30) days from receipt of the BFFO as long as the conversion meets all of the criteria specified above in Section 7.7.

7.8 Cancellation. Unless otherwise specified in this Attachment, if at any time prior to Space Acceptance, Comcast Phone cancels its order for Remote Collocation Space (Cancellation), BellSouth will bill the applicable nonrecurring charge(s) for any and all work processes for which work has begun or been completed. In Florida, if Comcast Phone cancels its order for Remote Collocation Space at any time prior to the Space Ready Date, no cancellation fee shall be assessed by BellSouth; however, Comcast Phone will be responsible for reimbursing BellSouth for any costs specifically incurred by BellSouth on behalf of Comcast Phone up to the date that the written notice of cancellation was received by BellSouth. In Georgia, if Comcast Phone cancels its order for Remote Collocation Space at any time prior to Space Acceptance, BellSouth will bill Comcast Phone for all costs incurred prior to the date of Cancellation and for

any costs incurred as a direct result of the Cancellation, not to exceed the total amount that would have been due had the firm order not been cancelled.

7.9 Licenses. Comcast Phone, at its own expense, will be solely responsible for obtaining from governmental authorities, and any other appropriate agency, entity, or person, all rights, privileges, permits, licenses, and certificates necessary or required to operate as a provider of telecommunications services to the public or to build-out, equip and/or occupy the Remote Collocation Space.

7.10 Environmental Compliance. The Parties agree to utilize and adhere to the Environmental Hazard Guidelines identified in Exhibit A attached hereto.

## 8. Rates and Charges

8.1 Rates. Comcast Phone agrees to pay the rates and charges identified in Exhibit B attached hereto.

8.2 Recurring Charges. If Comcast Phone has met the applicable fifteen (15) day acceptance walkthrough interval specified in Section 4, billing for recurring charges will begin upon the Space Acceptance Date. In the event Comcast Phone fails to complete an acceptance walkthrough within the applicable fifteen (15) day interval, billing for recurring charges will commence on the Space Ready Date. If Comcast Phone occupies the space prior to the Space Ready Date, the date Comcast Phone occupies the space is deemed the Space Acceptance Date and billing for recurring charges will begin on that date. The billing for all applicable monthly recurring charges will begin in Comcast Phone ‘s next billing cycle and will include any prorated charges for the period from Comcast Phone’s Space Acceptance Date or Space Ready Date, whichever is appropriate pursuant to Section 4.2, to the date the bill is issued by BellSouth.

8.3 Application Fee. BellSouth shall assess a nonrecurring Application Fee, via a service order, on the date that BellSouth provides an Application Response. BellSouth will bill the appropriate non-recurring Application Fee on the date that BellSouth provides an Application Response to Comcast Phone.

8.4 Bay Space. The bay space charge recovers the costs associated with air conditioning, ventilation and other allocated expenses for the maintenance of the Remote Site Location, and includes the amperage necessary to power Comcast Phone’s equipment. Comcast Phone shall remit bay space charges based upon the number of bays requested. BellSouth will assign Remote Collocation Space in conventional remote site bay lineups where feasible.

8.5 Power. BellSouth shall make available –48 Volt (-48V) Direct Current (DC) power for Comcast Phone’s Remote Collocation Space at a BellSouth Battery Distribution Fuse Bay (BDFB) within the Remote Site Location. The charge for power shall be assessed as part of the recurring charge for bay space, as referenced above in Section

8.4. If the power requirements for Comcast Phone's equipment exceed the capacity available, then such additional power requirements shall be assessed on an individual case basis. BellSouth will revise Comcast Phone's recurring power charges to reflect a power upgrade upon notification of the completion of the upgrade by Comcast Phone's BellSouth Certified Vendor. BellSouth will revise recurring power charges to reflect a power reduction upon BellSouth's receipt of the Power Reduction Form from Comcast Phone certifying the completion of the power reduction, including the removal of the power cabling by Comcast Phone's BellSouth Certified Supplier.

8.6 Adjacent Collocation Power. Charges for AC power will be assessed on a per breaker ampere, per month basis. Rates include the provision of commercial and standby AC power, where available. When obtaining power from a BellSouth service panel, protection devices and power cables must be engineered (sized) and installed by Comcast Phone's BellSouth Certified Supplier, with the exception that BellSouth shall engineer and install the protection devices and power cables for Adjacent Collocation. Comcast Phone's BellSouth Certified Supplier must provide a copy of the engineering power specifications prior to the equipment becoming operational. Charges for AC power shall be assessed pursuant to the rates specified in Exhibit B. AC power voltage and phase ratings shall be determined on a per location basis. At Comcast Phone's option, Comcast Phone may arrange for AC power in an Adjacent Collocation arrangement from a retail provider of electrical power.

8.7 Security Escort. After Comcast Phone has used its one accompanied site visit, pursuant to Section 5.9.1, and prior to Comcast Phone's completion of the BellSouth Security Training requirements, contained in Section 12 of this Agreement, a security escort will be required when Comcast Phone's employees, approved agent, supplier, or Guest(s) desire access to the Remote Site Location The rates for security escort service are assessed pursuant to the fee schedule contained in Exhibit B, beginning with the scheduled escort time agreed to by the Parties. BellSouth will wait for one-half (1/2) hour after the scheduled escort time to provide such requested escort service and Comcast Phone shall pay for such half-hour charges in the event Comcast Phone's employees, approved agent, supplier or Guest(s) fails to show up for the scheduled escort appointment.

8.8 Other. If no collocation rate element and associated rate is identified in Exhibit B of this Attachment, the Parties, upon request by either Party, will negotiate the rate for the specific collocation service or function identified in this Attachment.

## 9. Insurance

9.1 Comcast Phone shall, at its sole cost and expense, procure, maintain, and keep in force insurance as specified in this Section and underwritten by insurance companies licensed to do business in the states applicable under this Agreement and having a Best's Insurance Rating of A-.

9.2 Comcast Phone shall maintain the following specific coverage:

9.2.1 Commercial General Liability coverage in the amount of ten million dollars ($10,000,000.00) or a combination of Commercial General Liability and Excess/Umbrella coverage totaling not less than ten million dollars ($10,000,000.00). BellSouth shall be named as an Additional Insured on the Commercial General Liability policy as specified herein.

9.2.2 Statutory Workers Compensation coverage and Employers Liability coverage in the amount of one hundred thousand dollars ($100,000.00) each accident, one hundred thousand dollars ($100,000.00) each employee by disease, and five hundred thousand dollars ($500,000.00) policy limit by disease.

9.2.3 All Risk Property coverage on a full replacement cost basis insuring all of Comcast Phone's real and personal property situated on or within a BellSouth Premises and BellSouth's Remote Site Locations.

9.2.4 Comcast Phone may elect to purchase business interruption and contingent business interruption insurance, having been advised that BellSouth assumes no liability for loss of profit or revenues should an interruption of service occur.

9.3 The limits set forth in Section 9.2 above may be increased by BellSouth from time to time during the term of this Agreement upon thirty (30) days notice to Comcast Phone to at least such minimum limits as shall then be customary with respect to comparable occupancy of BellSouth structures.

9.4 All policies purchased by Comcast Phone shall be deemed to be primary and not contributing to or in excess of any similar coverage purchased by BellSouth. All insurance must be in effect on or before the date equipment is delivered to a BellSouth Remote Site Location and shall remain in effect for the term of this Agreement or until all of Comcast Phone's property has been removed from BellSouth's Remote Site Location, whichever period is longer. If Comcast Phone fails to maintain required coverage, BellSouth may pay the premiums thereon and seek reimbursement of same from Comcast Phone.

9.5 Comcast Phone shall submit certificates of insurance reflecting the coverage required pursuant to this Section within a minimum of ten (10) business days prior to the commencement of any work in the Remote Collocation Space. Failure to meet this interval may result in construction and equipment installation delays. Comcast Phone shall arrange for BellSouth to receive thirty (30) business days' advance notice of cancellation or non-renewal from Comcast Phone's insurance company. Comcast Phone shall forward a certificate of insurance and notice of cancellation/non-renewal to BellSouth at the following address:

BellSouth Telecommunications, Inc.
Attn.: Risk Management Office - Finance

17F54 BellSouth Center
675 W. Peachtree Street
Atlanta, Georgia 30375

9.6 Comcast Phone must conform to recommendations made by BellSouth's fire insurance company to the extent BellSouth has agreed to, or shall hereafter agree to, such recommendations.

9.7 Self-Insurance. If Comcast Phone's net worth exceeds five hundred million dollars ($500,000,000.00), Comcast Phone may elect to request self-insurance status in lieu of obtaining any of the insurance required in Section 9.2. Comcast Phone shall provide audited financial statements to BellSouth thirty (30) days prior to the commencement of any work in the Remote Collocation Space. BellSouth shall then review such audited financial statements and respond in writing to Comcast Phone in the event that self-insurance status is not granted to Comcast Phone. If BellSouth approves Comcast Phone for self-insurance, Comcast Phone shall annually furnish to BellSouth, and keep current, evidence of such net worth that is attested to by one of Comcast Phone's corporate officers. The ability to self-insure shall continue so long as Comcast Phone meets all of the requirements of this Section. If Comcast Phone subsequently no longer satisfies the requirements of this Section, Comcast Phone is required to purchase insurance as indicated by Section 9.2.

9.8 The net worth requirements set forth in Section 9.7 may be increased by BellSouth from time to time during the term of this Agreement upon thirty (30) days' notice to Comcast Phone to at least such minimum limits as shall then be customary with respect to comparable occupancy of a BellSouth Premises.

9.9 Failure to comply with the provisions of this Section will be deemed a material breach of this Attachment.

## 10. Mechanics Liens

10.1 If any mechanics lien or other liens are filed against property of either Party (BellSouth or Comcast Phone), or any improvement thereon by reason of or arising out of any labor or materials furnished or alleged to have been furnished or to be furnished to or for the other Party or by reason of any changes, or additions to said property made at the request or under the direction of the other Party, the other Party directing or requesting those changes shall, within thirty (30) business days after receipt of written notice from the Party against whose property said lien has been filed, either pay such lien or cause the same to be bonded off the affected property in the manner provided by law. The Party causing said lien to be placed against the property of the other shall also defend, at its sole cost and expense, on behalf of the other, any action, suit or proceeding which may be brought for the enforcement of such liens and shall pay any damage and discharge any judgment entered thereon.

## 11. Inspections

11.1 BellSouth may conduct an inspection of Comcast Phone's equipment and facilities in Comcast Phone's Remote Collocation Space(s) prior to the activation of facilities and/or services between Comcast Phone's equipment and equipment of BellSouth. BellSouth may conduct an inspection if Comcast Phone adds equipment and may otherwise conduct routine inspections at reasonable intervals mutually agreed upon by the Parties. BellSouth shall provide Comcast Phone with a minimum of forty-eight (48) hours or two (2) business days, whichever is greater, advance notice of all such inspections. All costs of such inspections shall be borne by BellSouth.

## 12. Security and Safety Requirements

12.1 Unless otherwise specified, Comcast Phone will be required, at its own expense, to conduct a statewide investigation of criminal history records for each Comcast Phone employee hired in the past five years being considered for work on a BellSouth Remote Site Location, for the states/counties where the Comcast Phone employee has worked and lived for the past five years. Where state law does not permit statewide collection or reporting, an investigation of the applicable counties is acceptable. Comcast Phone shall not be required to perform this investigation if an affiliated company of Comcast Phone has performed an investigation of the Comcast Phone employee seeking access, if such investigation meets the criteria set forth above. This requirement will not apply if Comcast Phone has performed a pre-employment statewide investigation of criminal history records of the Comcast Phone employee for the states/counties where the Comcast Phone employee has worked and lived for the past five years or, where state law does not permit a statewide investigation, an investigation of the applicable counties.

12.2 Comcast Phone will be required to administer to its personnel assigned to the BellSouth Premises security training either provided by BellSouth, or meeting criteria defined by BellSouth at www.interconnection.bellsouth.com/guides.

12.3 Comcast Phone shall provide its employees and agents with picture identification, which must be worn, and visible at all times while in Comcast Phone's Remote Collocation Space or other areas in or around the Remote Site Location. The photo Identification card shall bear, at a minimum, the employee's name and photo, and Comcast Phone's name. BellSouth reserves the right to remove from its Remote Site Location any employee of Comcast Phone not possessing identification issued by Comcast Phone or who have violated any of BellSouth's policies as outlined in the CLEC Security Training documents. Comcast Phone shall hold BellSouth harmless for any damages resulting from such removal of Comcast Phone's personnel from BellSouth Remote Site Location. Comcast Phone shall be solely responsible for ensuring that any Guest(s) of Comcast Phone is in compliance with all subsections of this Section.

12.4 Comcast Phone shall not assign to the BellSouth Remote Site Location any personnel with records of felony criminal convictions. Comcast Phone shall not assign to the BellSouth Remote Site Location any personnel with records of misdemeanor convictions, except for misdemeanor traffic violations, without advising BellSouth of the nature and gravity of the offense(s). BellSouth reserves the right to refuse access to any of Comcast Phone's personnel who have been identified to have misdemeanor criminal convictions. Notwithstanding the foregoing, in the event Comcast Phone chooses not to advise BellSouth of the nature and gravity of any misdemeanor conviction, Comcast Phone may, in the alternative, certify to BellSouth that it shall not assign to the BellSouth Remote Site Location any personnel with records of misdemeanor convictions (other than misdemeanor traffic violations).

12.4.1 Comcast Phone shall not knowingly assign to the BellSouth Remote Site Location any individual who was a former employee of BellSouth and whose employment with BellSouth was terminated for a criminal offense whether or not BellSouth sought prosecution of the individual for the criminal offense.

12.4.2 Comcast Phone shall not knowingly assign to the BellSouth Remote Site Location any individual who was a former supplier of BellSouth and whose access to a BellSouth Remote Site Location was revoked due to the commission of a criminal offense, whether or not BellSouth sought prosecution of the individual for the criminal offense.

12.5 For each Comcast Phone employee or agent hired by Comcast Phone within five years prior to being considered for work on the BellSouth Premises or BellSouth's Remote Site Locations, who requires access to a BellSouth Remote Site Location to perform work in Comcast Phone's Remote Collocation Space(s), Comcast Phone shall furnish BellSouth, a certification that the aforementioned background check and security training were completed. This certification must be provided to and approved by BellSouth before an employee or agent will be granted such access to a BellSouth Premises. The certification will contain a statement that no felony convictions were found and certifying that the employee completed the security training. If the employee's criminal history includes misdemeanor convictions, Comcast Phone will disclose the nature of the convictions to BellSouth at that time. In the alternative, Comcast Phone may certify to BellSouth that it shall not assign to the BellSouth Remote Site Location any personnel with records of misdemeanor convictions, other than misdemeanor traffic violations.

12.5.1 For all other Comcast Phone employees requiring access to a BellSouth Remote Site Location pursuant to this Attachment, Comcast Phone shall furnish BellSouth, prior to an employee gaining such access, a certification that the employee is not subject to the requirements of Section 12.5 above and that security training was completed by the employee.

12.6 At BellSouth's request, Comcast Phone shall promptly remove from the BellSouth Remote Site Location any employee of Comcast Phone that BellSouth does not wish

to grant access to a Remote Site Location: 1) pursuant to any investigation conducted by BellSouth, or 2) prior to the initiation of an investigation if an employee of Comcast Phone is found interfering with the property or personnel of BellSouth or another collocated telecommunications carrier, provided that an investigation shall be promptly commenced by BellSouth.

12.7 Security Violations. BellSouth reserves the right to interview Comcast Phone's employees, agents, suppliers, or Guests in the event of wrongdoing in or around a BellSouth Premises or Remote Site Location or involving BellSouth's or another collocated telecommunications carrier's property or personnel, provided that BellSouth shall provide reasonable notice to Comcast Phone's Security representative of such interview. Comcast Phone and its employees, agents, suppliers, or Guests shall reasonably cooperate with BellSouth's investigation into allegations of wrongdoing or criminal conduct committed by, witnessed by, or involving Comcast Phone's employees, agents, suppliers, or Guests. Additionally, BellSouth reserves the right to bill Comcast Phone for all reasonable costs associated with investigations involving its employees, agents, or suppliers, or Guests if it is established and mutually agreed in good faith that Comcast Phone's employees, agents, suppliers, or Guests are responsible for the alleged act(s). BellSouth shall bill Comcast Phone for BellSouth property, which is stolen or damaged, where an investigation determines the culpability of Comcast Phone's employees, agents, suppliers, or Guests and where Comcast Phone agrees, in good faith, with the results of such investigation. Comcast Phone shall notify BellSouth in writing immediately in the event that Comcast Phone discovers one of its employees, agents, suppliers, or Guests already working on the BellSouth Remote Site Location is a possible security risk. Upon request of the other Party, the Party who is the employer shall discipline consistent with its employment practices, up to and including removal from a BellSouth Premises or Remote Site Location, any employee found to have violated the security and safety requirements of this Section. Comcast Phone shall hold BellSouth harmless for any damages resulting from such removal of Comcast Phone's personnel from a BellSouth Premises.

12.8 Use of Supplies. Unauthorized use of telecommunications equipment or supplies by either Party, whether or not used routinely to provide telephone service (e.g. plug-in cards,) will be strictly prohibited and handled appropriately. Costs associated with such unauthorized use may be charged to the offending Party, as may be all associated investigative costs.

12.9 Use of Official Lines. Except for non-toll calls necessary in the performance of their work, neither Party shall use the telephone(s) of the other Party on the BellSouth Remote Site Location. Charges for unauthorized telephone calls may be charged to the offending Party, as may be all associated investigative costs.

12.10 Accountability. Full compliance with the Security requirements of this Section shall in no way limit the accountability of either Party to the other for the improper actions of its employees, agents, suppliers, or Guests.

## 13. Destruction of Remote Collocation Space

13.1 In the event a Remote Collocation Space is wholly or partially damaged by fire, windstorm, hurricane, tornado, flood or by similar Acts of God or force majeure circumstances beyond a Party's reasonable control to such an extent as to be rendered wholly unsuitable for Comcast Phone's permitted use hereunder, then either Party may elect within ten (10) days after such damage, to terminate this Attachment with respect to the affected Remote Collocation Space, and if either Party shall so elect, by giving the other written notice of termination, both Parties shall stand released of and from further liability under the terms hereof with respect to such Remote Collocation Space. If the Remote Collocation Space shall suffer only minor damage and shall not be rendered wholly unsuitable for Comcast Phone's permitted use, or is damaged and the option to terminate is not exercised by either Party, BellSouth covenants and agrees to proceed promptly without expense to Comcast Phone, except for improvements not to the property of BellSouth, to repair the damage. BellSouth shall have a reasonable time within which to rebuild or make any repairs, and such rebuilding and repairing shall be subject to delays caused by storms, shortages of labor and materials, government regulations, strikes, walkouts, and causes beyond the control of BellSouth, which causes shall not be construed as limiting factors, but as exemplary only. Comcast Phone may, at its own expense, accelerate the rebuild of its Remote Collocation Space and equipment provided, however, that a BellSouth Certified Supplier is used and the necessary space preparation has been completed. A BellSouth Certified Vendor must perform a rebuild of equipment. If Comcast Phone's acceleration of the project increases the cost of the project, then those additional charges will be incurred at Comcast Phone's expense. Where allowed and where practical, Comcast Phone may erect a temporary facility while BellSouth rebuilds or makes repairs. In all cases where the Remote Collocation Space shall be rebuilt or repaired, Comcast Phone shall be entitled to an equitable abatement of rent and other charges, depending upon the unsuitability of the Remote Collocation Space for Comcast Phone's permitted use, until such Remote Collocation Space is fully repaired and restored and Comcast Phone's equipment installed therein (but in no event later than thirty (30) days after the Remote Collocation Space is fully repaired and restored). Where Comcast Phone has placed a Remote Site Adjacent Arrangement pursuant to Section 3.4, Comcast Phone shall have the sole responsibility to repair or replace said Remote Site Adjacent Arrangement provided herein. Pursuant to this Section, BellSouth will restore the associated services to the Remote Site Adjacent Arrangement.

## 14. Eminent Domain

14.1 If the whole of a Remote Collocation Space or Remote Site Adjacent Arrangement shall be taken by any public authority under the power of eminent domain, then this Attachment shall terminate with respect to such Remote Collocation Space or Remote Site Adjacent Arrangement as of the date possession shall be taken by such public authority and rent and other charges for the Remote Collocation Space or Remote Site Adjacent Arrangement shall be paid up to that day with a proportionate refund by

BellSouth of such rent and charges as may have been paid in advance for a period subsequent to the date of the taking. If any part of the Remote Collocation Space or Remote Site Adjacent Arrangement shall be taken under eminent domain, BellSouth and Comcast Phone shall each have the right to terminate this Attachment with respect to such Remote Collocation Space or Remote Site Adjacent Arrangement and declare the same null and void, by written notice of such intention to the other Party within ten (10) days after such taking.

**15. Nonexclusivity**

15.1 Comcast Phone understands that this Attachment is not exclusive and that BellSouth may enter into similar agreements with other Parties. Assignment of Remote Collocation Space pursuant to all such agreements shall be determined by space availability and made on a first come, first served basis.

# ENVIRONMENTAL AND SAFETY PRINCIPLES

The following principles provide basic guidance on environmental and safety issues when applying for and establishing physical collocation arrangements.

## 1. GENERAL PRINCIPLES

1.1 Compliance with Applicable Law. BellSouth and Comcast Phone agree to comply with applicable federal, state, and local environmental and safety laws and regulations including U.S. Environmental Protection Agency (USEPA) regulations issued under the Clean Air Act (CAA), Clean Water Act (CWA), Resource Conservation and Recovery Act (RCRA), Comprehensive Environmental Response, Compensation and Liability Act (CERCLA), Superfund Amendments and Reauthorization Act (SARA), the Toxic Substances Control Act (TSCA), and OSHA regulations issued under the Occupational Safety and Health Act of 1970, as amended, and National Fire Protection Association (NFPA) NEC and National Electric Safety Codes (NESC) ("Applicable Laws") requirements. Each Party shall notify the other if compliance inspections are conducted by regulatory agencies and/or citations are issued that relate to any aspect of this Attachment.

1.2 Notice. BellSouth and Comcast Phone shall provide notice to the other, including any Material Safety Data Sheets (MSDSs), of known and recognized physical hazards or Hazardous Chemicals existing on site or brought on site. A Hazardous Chemical inventory list is posted on an OSHA Poster and updated annually at each Central Office. This Poster is normally located near the front entrance of the building or in the lounge area. Each Party is required to provide specific notice for known potential Imminent Danger conditions. Comcast Phone should contact 1-800-743-6737 for any BellSouth MSDS required.

1.3 Practices/Procedures. BellSouth may make available additional environmental control procedures for Comcast Phone to follow when working at a BellSouth Remote Site Location (See Section 2, below). These practices/procedures will represent the regular work practices required to be followed by the employees and suppliers of BellSouth for environmental protection. Comcast Phone will require its suppliers, agents, Guests and others accessing the BellSouth Remote Site Location to comply with these practices. Section 2 lists the Environmental categories where BST practices should be followed by Comcast Phone when operating in the BellSouth Remote Site Location.

1.4 Environmental and Safety Inspections. BellSouth reserves the right to inspect Comcast Phone's Remote Collocation Space with proper notification. BellSouth reserves the right to stop any Comcast Phone work operation that imposes Imminent Danger to the environment, employees or other persons in or around a Remote Site Location.

1.5 Hazardous Materials Brought On Site. Any hazardous materials brought into, used, stored or abandoned a BellSouth Remote Site Location by Comcast Phone are owned by and considered the property of Comcast Phone. Comcast Phone will indemnify BellSouth for claims, lawsuits or damages to persons or property caused by these materials. Without prior written BellSouth approval, no substantial new safety or environmental hazards can be created by Comcast Phone or different

hazardous materials used by Comcast Phone at the BellSouth Remote Site Location. Comcast Phone must demonstrate adequate emergency response capabilities for the materials used by Comcast Phone or remaining at a BellSouth Remote Site Location.

1.6 Spills and Releases. When contamination is discovered at a BellSouth Remote Site Location, either Party discovering the condition must notify the other Party. All Spills or Releases of regulated materials will immediately be reported by Comcast Phone to BellSouth.

1.7 Coordinated Environmental Plans and Permits. BellSouth and Comcast Phone will coordinate plans, permits or information required to be submitted to government agencies, such as emergency response plans, spill prevention control and countermeasures (SPCC) plans and community reporting. If fees are associated with filing, BellSouth and Comcast Phone will develop a cost sharing procedure. If BellSouth's permit or EPA identification number must be used, Comcast Phone must comply with all of BellSouth's permit conditions and environmental processes, including environmental "best management practices (BMP)" (see Section 2, below) and the selection of BST disposition vendors and disposal sites.

1.8 Environmental and Safety Indemnification. BellSouth and Comcast Phone shall indemnify, defend and hold harmless the other Party from and against any claims (including, without limitation, third-party claims for personal injury or death or real or personal property damage), judgments, damages, (including direct and indirect damages, and punitive damages), penalties, fines, forfeitures, costs, liabilities, interest and losses arising in connection with the violation or alleged violation of any Applicable Law or contractual obligation or the presence or alleged presence of contamination arising out of the acts or omissions of the indemnifying Party, its employees, agents, suppliers, or Guests concerning its operations at a Remote Site Location.

## 2. CATEGORIES FOR CONSIDERATION OF ENVIRONMENTAL ISSUES

2.1 When performing functions that fall under the following Environmental categories on BellSouth's Remote Site Location, Comcast Phone agrees to comply with the applicable sections of the current issue of BellSouth's Environmental and Safety Methods and Procedures (M&Ps), incorporated herein by this reference. Comcast Phone further agrees to cooperate with BellSouth to ensure that Comcast Phone's employees, agents, suppliers and/or Guests are knowledgeable of and satisfy those provisions of BellSouth's Environmental M&Ps which apply to the specific Environmental function being performed by Comcast Phone, its employees, agents ,suppliers and/or Guests.

2.1.1 The most current version of reference documentation must be requested from Comcast Phone's BellSouth Regional Contract Manager (RCM).

| ENVIRONMENTAL CATEGORIES | ENVIRONMENTAL ISSUES | ADDRESSED BY THE FOLLOWING DOCUMENTATION |
|---|---|---|
| Disposal of hazardous material or other regulated material (e.g., batteries, fluorescent | Compliance with all applicable local, state, & federal laws and | • Std T&C 450 |

| | | |
|---|---|---|
| tubes, solvents & cleaning materials) | regulations<br><br>Pollution liability insurance<br><br>EVET approval of supplier | • Fact Sheet Series 17000<br><br>• Std T&C 660-3<br><br>• Approved Environmental Vendor List (Contact ATCC Representative) |
| Emergency response | Hazmat/waste release/spill fire safety emergency | • Fact Sheet Series 1700<br>• Building Emergency Operations Plan (EOP) (specific to and located on Remote Site Location) |
| Contract labor/outsourcing for services with environmental implications to be performed on BellSouth Remote Site Location<br>(e.g., disposition of hazardous material/waste; maintenance of storage tanks) | Compliance with all applicable local, state, & federal laws and regulations<br><br>Performance of services in accordance with BST's environmental M&Ps<br><br>InsuranceComcast Phone | • Std T&C 450<br><br>• Std T&C 450-B<br>• (Contact ATCC Representative for copy of appropriate E/S M&Ps.)<br><br>• Std T&C 660 |
| Transportation of hazardous material | Compliance with all applicable local, state, & federal laws and regulations<br><br>Pollution liability insurance<br><br>EVET approval of supplier | • Std T&C 450<br>• Fact Sheet Series 17000<br><br>• Std T&C 660-3<br><br>• Approved Environmental Vendor List (Contact ATCC Representative) |
| Maintenance/operations work which may produce a waste<br><br>Other maintenance work | Compliance with all applicable local, state, & federal laws and regulations<br><br>Protection of BST employees and equipment | • Std T&C 450<br><br>• 29CFR 1910.147 (OSHA Standard)<br>• 29CFR 1910 Subpart O (OSHA Standard) |
| Janitorial services | All waste removal and disposal must conform to all applicable federal, state and local regulations | • –Procurement Manager (CRES Related Matters)-BST Supply Chain Services |

| | | |
|---|---|---|
| | All Hazardous Material and Waste<br><br>Asbestos notification and protection of employees and equipment | • Fact Sheet Series 17000<br><br>• GU-BTEN-001BT, Chapter 3<br>• BSP 010-170-001BS (Hazcom) |
| Manhole cleaning | Compliance with all applicable local, state, & federal laws and regulations<br><br>Pollution liability insurance<br><br>EVET approval of supplier | • Std T&C 450<br>• Fact Sheet 14050<br>• BSP 620-145-011PR Issue A, August 1996<br><br>• Std T&C 660-3<br><br>• Approved Environmental Vendor List (Contact ATCC Representative) |
| Removing or disturbing building materials that may contain asbestos | Asbestos work practices | • GU-BTEN-001BT, Chapter 3 For questions regarding removing or disturbing materials that contain asbestos, call the BellSouth Building Service Center: AL, MS, TN, KY & LA (local area code) 557-6194 FL, GA, NC & SC (local area code) 780-2740 |

## 3. DEFINITIONS

Generator. Under RCRA, the person whose act produces a Hazardous Waste, as defined in 40 CFR 261, or whose act first causes a Hazardous Waste to become subject to regulation. The Generator is legally responsible for the proper management and disposal of Hazardous Wastes in accordance with regulations.

Hazardous Chemical. As defined in the U.S. Occupational Safety and Health (OSHA) hazard communication standard (29 CFR 1910.1200), any chemical which is a health hazard or physical hazard.

Hazardous Waste. As defined in section 1004 of RCRA.

Imminent Danger. Any conditions or practices at a remote site location which are such that a danger exists which could reasonably be expected to cause immediate death or serious harm to people or immediate significant damage to the environment or natural resources.

Spill or Release. As defined in Section 101 of CERCLA.

## 4. ACRONYMS

ATCC – Account Team Collocation Coordinator

BST – BellSouth Telecommunications

CRES – Corporate Real Estate and Services (formerly PS&M)

DEC/LDEC - Department Environmental Coordinator/Local Department Environmental Coordinator

E/S – Environmental/Safety

EVET - Environmental Vendor Evaluation Team

GU-BTEN-001BT - BellSouth Environmental Methods and Procedures

NESC - National Electrical Safety Codes

P&SM - Property & Services Management

Std T&C - Standard Terms & Conditions

| COLLOCATION - Alabama | | | | | | | | | | | | | | Attachment: 4 Exh B | | | |
|---|---|---|---|---|---|---|---|---|---|---|---|---|---|---|---|---|---|
| CATEGORY | | RATE ELEMENTS | Interim | Zone | BCS | USOC | RATES($) | | | | | Svc Order Submitted Elec per LSR | Svc Order Submitted Manually per LSR | Incremental Charge - Manual Svc Order vs. Electronic-1st | Incremental Charge - Manual Svc Order vs. Electronic-Add'l | Incremental Charge - Manual Svc Order vs. Electronic-Disc 1st | Incremental Charge - Manual Svc Order vs. Electronic-Disc Add'l |
| | | | | | | | Rec | Nonrecurring | | Nonrecurring Disconnect | | OSS Rates($) | | | | | |
| | | | | | | | | First | Add'l | First | Add'l | SOMEC | SOMAN | SOMAN | SOMAN | SOMAN | SOMAN |
| **PHYSICAL COLLOCATION** | | | | | | | | | | | | | | | | | |
| | **Application** | | | | | | | | | | | | | | | | |
| | | Physical Collocation - Initial Application Fee | | | CLO | PE1BA | | 1,879.48 | | 0.51 | | | | | | | |
| | | Physical Collocation - Subsequent Application Fee | | | CLO | PE1CA | | 1,566.60 | | 0.51 | | | | | | | |
| | | Physical Collocation - Co-Carrier Cross Connects/Direct Connect, Application Fee, per application | | | CLO | PE1DT | | 584.22 | | | | | | | | | |
| | | Physical Collocation Administrative Only - Application Fee | | | CLO | PE1BL | | 742.15 | | | | | | | | | |
| | | Physical Collocation - Application Cost, Simple Augment | | | CLO | PE1KS | | 594.41 | | 1.21 | | | | | | | |
| | | Physical Collocation - Application Cost, Minor Augment | | | CLO | PE1KM | | 833.47 | | 1.21 | | | | | | | |
| | | Physical Collocation - Application Cost, Intermediate Augment | | | CLO | PE1K1 | | 1,058.00 | | 1.21 | | | | | | | |
| | | Physical Collocation - Application Cost - Major Augment | | | CLO | PE1KJ | | 2,410.00 | | 1.21 | | | | | | | |
| | **Space Preparation** | | | | | | | | | | | | | | | | |
| | | Physical Collocation - Floor Space, per sq feet | | | CLO | PE1PJ | 3.22 | | | | | | | | | | |
| | | Physical Collocation - Space Enclosure, welded wire, first 50 square feet | | | CLO | PE1BX | 140.99 | | | | | | | | | | |
| | | Physical Collocation - Space enclosure, welded wire, first 100 square feet | | | CLO | PE1BW | 156.33 | | | | | | | | | | |
| | | Physical Collocation - Space enclosure, welded wire, each additional 50 square feet | | | CLO | PE1CW | 15.34 | | | | | | | | | | |
| | | Physical Collocation - Space Preparation - C.O. Modification per square ft. | | | CLO | PE1SK | 1.96 | | | | | | | | | | |
| | | Physical Collocation - Space Preparation, Common Systems Modifications-Cageless, per square foot | | | CLO | PE1SL | 2.62 | | | | | | | | | | |
| | | Physical Collocation - Space Preparation - Common Systems Modifications-Caged, per cage | | | CLO | PE1SM | 88.86 | | | | | | | | | | |
| | | Physical Collocation - Space Preparation - Firm Order Processing | | | CLO | PE1SJ | | 600.71 | | | | | | | | | |
| | | Physical Collocation - Space Availability Report, per Central Office Requested | | | CLO | PE1SR | | 1,075.17 | | | | | | | | | |
| | **Power** | | | | | | | | | | | | | | | | |
| | | Physical Collocation - Power, -48V DC Power - per Fused Amp Requested | | | CLO | PE1PL | 7.83 | | | | | | | | | | |
| | | Physical Collocation - Power, 120V AC Power, Single Phase, per Breaker Amp | | | CLO | PE1FB | 4.91 | | | | | | | | | | |
| | | Physical Collocation - Power, 240V AC Power, Single Phase, per Breaker Amp | | | CLO | PE1FD | 9.84 | | | | | | | | | | |
| | | Physical Collocation - Power, 120V AC Power, Three Phase, per Breaker Amp | | | CLO | PE1FE | 14.74 | | | | | | | | | | |
| | | Physical Collocation - Power, 277V AC Power, Three Phase, per Breaker Amp | | | CLO | PE1FG | 34.06 | | | | | | | | | | |
| | **Cross Connects (Cross Connects, Co-Carrier Cross Connects, and Ports)** | | | | | | | | | | | | | | | | |
| | | Physical Collocation - 2-wire cross-connect, loop, provisioning | | | UEANL,UEQ, UNCNX, UEA, UCL, UAL, UHL, UDN, UNCVX | PE1P2 | 0.03 | 12.30 | 11.80 | 6.03 | 5.44 | | | | | | |
| | | Physical Collocation - 4-wire cross-connect, loop, provisioning | | | UEA, UHL, UNCVX, UNCDX, UCL, UDL | PE1P4 | 0.05 | 12.39 | 11.87 | 6.39 | 5.73 | | | | | | |
| | | Physical Collocation -DS1 Cross-Connect for Physical Collocation, provisioning | | | WDS1L, WDS1S, UXTD1, ULDD1, USLEL, UNLD1, U1TD1, UNC1X, UEPSR, UEPSB, UEPSE, UEPSP, USL, UEPEX, UEPDX | PE1P1 | 1.11 | 22.03 | 15.93 | 6.40 | 5.79 | | | | | | |

| COLLOCATION - Alabama | | | | | | | | | | | | | | Attachment: 4 Exh B | | | |
|---|---|---|---|---|---|---|---|---|---|---|---|---|---|---|---|---|---|
| CATEGORY | | RATE ELEMENTS | Interim | Zone | BCS | USOC | RATES($) | | | | | Svc Order Submitted Elec per LSR | Svc Order Submitted Manually per LSR | Incremental Charge - Manual Svc Order vs. Electronic-1st | Incremental Charge - Manual Svc Order vs. Electronic-Add'l | Incremental Charge - Manual Svc Order vs. Electronic-Disc 1st | Incremental Charge - Manual Svc Order vs. Electronic-Disc Add'l |
| | | | | | | | | Nonrecurring | | Nonrecurring Disconnect | | OSS Rates($) | | | | | |
| | | | | | | | Rec | First | Add'l | First | Add'l | SOMEC | SOMAN | SOMAN | SOMAN | SOMAN | SOMAN |
| | | Physical Collocation - DS3 Cross-Connect, provisioning | | | UE3, U1TD3, UXTD3, UXTS1, UNC3X, UNCSX, ULDD3, U1TS1, ULDS1, UNLD3, UEPEX, UEPDX, UEPSR, UEPSB, UEPSE, UEPSP | PE1P3 | 14.16 | 20.89 | 15.20 | 7.38 | 5.92 | | | | | | |
| | | Physical Collocation - 2-Fiber Cross-Connect | | | CLO, ULDO3, ULD12, ULD48, U1TO3, U1T12, U1T48, UDLO3, UDL12, UDF | PE1F2 | 2.81 | 20.89 | 15.20 | 7.38 | 5.92 | | | | | | |
| | | Physical Collocation - 4-Fiber Cross-Connect | | | ULDO3, ULD12, ULD48, U1TO3, U1T12, U1T48, UDLO3, UDL12, UDF, UDFCX | PE1F4 | 4.99 | 25.55 | 19.86 | 9.71 | 8.25 | | | | | | |
| | | Physical Collocation - Co-Carrier Cross Connects/Direct Connect - Fiber Cable Support Structure, per linear foot, per Cable. | | | CLO | PE1ES | 0.0011 | | | | | | | | | | |
| | | Physical Collocation - Co-Carrier Cross Connect/Direct Connect - Copper/Coax Cable Support Structure, per linear foot, per cable. | | | CLO | PE1DS | 0.0016 | | | | | | | | | | |
| | | Physical Collocation 2-Wire Cross Connect, Port | | | UEPSR, UEPSP, UEPSE, UEPSB, UEPSX, UEP2C | PE1R2 | 0.03 | 12.30 | 11.80 | 6.03 | 5.44 | | | | | | |
| | | Physical Collocation 4-Wire Cross Connect, Port | | | UEPEX, UEPDD | PE1R4 | 0.05 | 12.39 | 11.87 | 6.39 | 5.73 | | | | | | |
| | **Security** | | | | | | | | | | | | | | | | |
| | | Physical Collocation - Security Escort for Basic Time - normally scheduled work, per half hour | | | CLO | PE1BT | | 16.93 | 10.73 | | | | | | | | |
| | | Physical Collocation - Security Escort for Overtime - outside of normally scheduled working hours on a scheduled work day, per half hour | | | CLO | PE1OT | | 22.05 | 13.86 | | | | | | | | |
| | | Physical Collocation - Security Escort for Premium Time - outside of scheduled work day, per half hour | | | CLO | PE1PT | | 27.17 | 16.98 | | | | | | | | |
| | | Physical Collocation - Security Access System - Security System per Central Office | | | CLO | PE1AX | 45.70 | | | | | | | | | | |
| | | Physical Collocation -Security Access System - New Card Activation, per Card Activation (First), per State | | | CLO | PE1A1 | 0.05 | 27.79 | | | | | | | | | |
| | | Physical Collocation-Security Access System-Administrative Change, existing Access Card, per Request, per State, per Card | | | CLO | PE1AA | | 7.79 | | | | | | | | | |
| | | Physical Collocation - Security Access System - Replace Lost or Stolen Card, per Card | | | CLO | PE1AR | | 22.78 | | | | | | | | | |
| | | Physical Collocation - Security Access - Initial Key, per Key | | | CLO | PE1AK | | 13.10 | | | | | | | | | |
| | | Physical Collocation - Security Access - Key, Replace Lost or Stolen Key, per Key | | | CLO | PE1AL | | 13.10 | | | | | | | | | |
| | **CFA** | | | | | | | | | | | | | | | | |
| | | Physical Collocation - CFA Information Resend Request, per premises, per arrangement, per request | | | CLO | PE1C9 | | 77.56 | | | | | | | | | |
| | **Cable Records - Note: The rates in the First & Additional columns will actually be billed as "Initial I" and "Subsequent S" respectively** | | | | | | | | | | | | | | | | |
| | | Physical Collocation - Cable Records, per request | | | CLO | PE1CR | | I 759.29 | S 488.11 | 133.00 | | | | | | | |
| | | Physical Collocation, Cable Records, VG/DS0 Cable, per cable record (maximum 3600 records) | | | CLO | PE1CD | | 326.92 | | 189.12 | | | | | | | |
| | | Physical Collocation, Cable Records, VG/DS0 Cable, per each 100 pair | | | CLO | PE1CO | | 4.81 | | 5.90 | | | | | | | |
| | | Physical Collocation, Cable Records, DS1, per T1 TIE | | | CLO | PE1C1 | | 2.25 | | 2.76 | | | | | | | |
| | | Physical Collocation, Cable Records, DS3, per T3 TIE | | | CLO | PE1C3 | | 7.88 | | 9.66 | | | | | | | |

| COLLOCATION - Alabama | | | | | | | | | | | | | | Attachment: 4 Exh B | | | |
|---|---|---|---|---|---|---|---|---|---|---|---|---|---|---|---|---|---|
| CATEGORY | | RATE ELEMENTS | Interim | Zone | BCS | USOC | RATES($) | | | | | Svc Order Submitted Elec per LSR | Svc Order Submitted Manually per LSR | Incremental Charge - Manual Svc Order vs. Electronic-1st | Incremental Charge - Manual Svc Order vs. Electronic-Add'l | Incremental Charge - Manual Svc Order vs. Electronic-Disc 1st | Incremental Charge - Manual Svc Order vs. Electronic-Disc Add'l |
| | | | | | | | Rec | Nonrecurring | | Nonrecurring Disconnect | | OSS Rates($) | | | | | |
| | | | | | | | | First | Add'l | First | Add'l | SOMEC | SOMAN | SOMAN | SOMAN | SOMAN | SOMAN |
| | | Physical Collocation - Cable Records, Fiber Cable, per cable record (maximum 99 records) | | | CLO | PE1CB | | 84.49 | | 77.13 | | | | | | | |
| | | Physical Collocation, Cable Records,CAT5/RJ45 | | | CLO | PE1C5 | | 2.25 | | 2.76 | | | | | | | |
| | **Virtual to Physical** | | | | | | | | | | | | | | | | |
| | | Physical Collocation - Virtual to Physical Collocation Relocation, per Voice Grade Circuit | | | CLO | PE1BV | | 33.00 | | | | | | | | | |
| | | Physical Collocation - Virtual to Physical Collocation Relocation, per DSO Circuit | | | CLO | PE1BO | | 33.00 | | | | | | | | | |
| | | Physical Collocation - Virtual to Physical Collocation Relocation, per DS1 Circuit | | | CLO | PE1B1 | | 52.00 | | | | | | | | | |
| | | Physical Collocation - Virtual to Physical Collocation Relocation, per DS3 Circuit | | | CLO | PE1B3 | | 52.00 | | | | | | | | | |
| | | Physical Collocation - Virtual to Physical Collocation In-Place, Per Voice Grade Circuit | | | CLO | PE1BR | | 23.00 | | | | | | | | | |
| | | Physical Collocation Virtual to Physical Collocation In-Place, Per DSO Circuit | | | CLO | PE1BP | | 23.00 | | | | | | | | | |
| | | Physical Collocation - Virtual to Physical Collocation In-Place, Per DS1 Circuit | | | CLO | PE1BS | | 33.00 | | | | | | | | | |
| | | Physical Collocation - Virtual to Physical Collocation In-Place, per DS3 Circuit | | | CLO | PE1BE | | 37.00 | | | | | | | | | |
| | **Entrance Cable** | | | | | | | | | | | | | | | | |
| | | Physical Collocation - Fiber Cable Installation, Pricing, non-recurring charge, per Entrance Cable | | | CLO | PE1BD | | 859.71 | | 22.49 | | | | | | | |
| | | Physical Collocation - Fiber Cable Support Structure, per Entrance Cable | | | CLO | PE1PM | 17.11 | | | | | | | | | | |
| | | Physical Collocation - Fiber Entrance Cable Installation, per Fiber | | | CLO | PE1ED | | 3.87 | | | | | | | | | |
| **VIRTUAL COLLOCATION** | | | | | | | | | | | | | | | | | |
| | **Application** | | | | | | | | | | | | | | | | |
| | | Virtual Collocation - Application Fee | | | AMTFS | EAF | | 1,205.26 | | 0.51 | | | | | | | |
| | | Virtual Collocation - Co-Carrier Cross Connects/Direct Connect, Application Fee, per application | | | AMTFS | VE1CA | | 584.22 | | | | | | | | | |
| | | Virtual Collocation Administrative Only - Application Fee | | | AMTFS | VE1AF | | 742.15 | | | | | | | | | |
| | **Space Preparation** | | | | | | | | | | | | | | | | |
| | | Virtual Collocation - Floor Space, per sq. ft. | | | AMTFS | ESPVX | 3.22 | | | | | | | | | | |
| | **Power** | | | | | | | | | | | | | | | | |
| | | Virtual Collocation - Power, per fused amp | | | AMTFS | ESPAX | 7.83 | | | | | | | | | | |
| | **Cross Connects (Cross Connects, Co-Carrier Cross Connects, and Ports)** | | | | | | | | | | | | | | | | |
| | | Virtual Collocation - 2-wire cross-connect, loop, provisioning | | | UEANL, UEA, UDN, UAL, UHL, UCL, UEQ, UNCVX, UNCDX, UNCNX | UEAC2 | 0.03 | 12.30 | 11.80 | 6.03 | 5.44 | | | | | | |
| | | Virtual Collocation - 4-wire cross-connect, loop, provisioning | | | UEA, UHL, UCL, UDL, UNCVX, UNCDX | UEAC4 | 0.05 | 12.39 | 11.87 | 6.39 | 5.73 | | | | | | |
| | | Virtual collocation - Special Access & UNE, cross-connect per DS1 | | | ULR, UXTD1, UNC1X, ULDD1, U1TD1, USLEL, UNLD1, USL, UEPEX, UEPDX | CNC1X | 1.11 | 22.03 | 15.93 | 6.40 | 5.79 | | | | | | |
| | | Virtual collocation - Special Access & UNE, cross-connect per DS3 | | | USL, UE3, U1TD3, UXTS1, UXTD3, UNC3X, UNCSX, ULDD3, U1TS1, ULDS1, UDLSX, UNLD3 | CND3X | 14.16 | 20.89 | 15.20 | 7.38 | 5.92 | | | | | | |

## COLLOCATION - Alabama

Attachment: 4 Exh B

| CATEGORY | RATE ELEMENTS | Interim | Zone | BCS | USOC | RATES($) Rec | Nonrecurring First | Nonrecurring Add'l | Nonrecurring Disconnect First | Nonrecurring Disconnect Add'l | Svc Order Submitted Elec per LSR | Svc Order Submitted Manually per LSR | Incremental Charge - Manual Svc Order vs. Electronic-1st | Incremental Charge - Manual Svc Order vs. Electronic-Add'l | Incremental Charge - Manual Svc Order vs. Electronic-Disc 1st | Incremental Charge - Manual Svc Order vs. Electronic-Disc Add'l |
|---|---|---|---|---|---|---|---|---|---|---|---|---|---|---|---|---|
| | | | | | | | OSS Rates($) | | | | | | | | | |
| | | | | | | | | | | | SOMEC | SOMAN | SOMAN | SOMAN | SOMAN | SOMAN |
| | Virtual Collocation - 2-Fiber Cross Connects | | | UDL12, UDLO3, U1T48, U1T12, U1TO3, ULDO3, ULD12, ULD48, UDF | CNC2F | 2.84 | 20.89 | 15.20 | 7.38 | 5.92 | | | | | | |
| | Virtual Collocation - 4-Fiber Cross Connects | | | UDL12, UDLO3, U1T48, U1T12, U1TO3, ULDO3, ULD12, ULD48, UDF | CNC4F | 5.69 | 25.55 | 19.86 | 9.71 | 8.25 | | | | | | |
| | Virtual Collocation - Co-Carrier Cross Connects/Direct Connect - Fiber Cable Support Structure, per linear foot, per cable | | | AMTFS | VE1CB | 0.0011 | | | | | | | | | | |
| | Virtual Collocation - Co-Carrier Cross Connects/Direct Connect - Copper/Coax Cable Support Structure, per linear foot, per cable | | | AMTFS | VE1CD | 0.0016 | | | | | | | | | | |
| | Virtual Collocation 2-Wire Cross Connect, Port | | | UEPSX, UEPSB, UEPSE, UEPSP, UEPSR, UEP2C | VE1R2 | 0.03 | 12.30 | 11.80 | 6.03 | 5.44 | | | | | | |
| | Virtual Collocation 4-Wire Cross Connect, Port | | | UEPDD, UEPEX | VE1R4 | 0.05 | 12.39 | 11.87 | 6.39 | 5.73 | | | | | | |
| **CFA** | | | | | | | | | | | | | | | | |
| | Virtual Collocation - CFA Information Resend Request, per Premises, per Arrangement, per request | | | AMTFS | VE1QR | | 77.56 | | | | | | | | | |
| **Cable Records - Note: The rates in the First & Additional columns will actually be billed as "Initial I" & "Subsequent S" respectively** | | | | | | | | | | | | | | | | |
| | Virtual Collocation Cable Records - per request | | | AMTFS | VE1BA | | 759.29 | 488.11 | 133.00 | | | | | | | |
| | Virtual Collocation Cable Records - VG/DS0 Cable, per cable record | | | AMTFS | VE1BB | | 326.92 | | 189.12 | | | | | | | |
| | Virtual Collocaiton Cable Records - VG/DS0 Cable, per each 100 pair | | | AMTFS | VE1BC | | 4.81 | | 5.90 | | | | | | | |
| | Virtual Collocation Cable Records - DS1, per T1TIE | | | AMTFS | VE1BD | | 2.25 | | 2.76 | | | | | | | |
| | Virtual Collocation Cable Records - DS3, per T3TIE | | | AMTFS | VE1BE | | 7.88 | | 9.66 | | | | | | | |
| | Virtual Collocation Cable Records - Fiber Cable, per 99 fiber records | | | AMTFS | VE1BF | | 84.49 | | 77.13 | | | | | | | |
| | Virtual Collocation Cable Records - CAT 5/RJ45 | | | AMTFS | VE1B5 | | 2.25 | | 2.76 | | | | | | | |
| **Security** | | | | | | | | | | | | | | | | |
| | Virtual collocation - Security escort, basic time, normally scheduled work hours | | | AMTFS | SPTBX | | 16.93 | 10.73 | | | | | | | | |
| | Virtual collocation - Security escort, overtime, outside of normally scheduled work hours on a normal working day | | | AMTFS | SPTOX | | 22.05 | 13.86 | | | | | | | | |
| | Virtual collocation - Security escort, premium time, outside of a scheduled work day | | | AMTFS | SPTPX | | 27.17 | 16.98 | | | | | | | | |
| **Maintenance** | | | | | | | | | | | | | | | | |
| | Virtual collocation - Maintenance in CO - Basic, per half hour | | | AMTFS | CTRLX | | 27.93 | 10.73 | | | | | | | | |
| | Virtual collocation - Maintenance in CO - Overtime, per half hour | | | AMTFS | SPTOM | | 36.47 | 13.86 | | | | | | | | |
| | Virtual collocation - Maintenance in CO - Premium per half hour | | | AMTFS | SPTPM | | 45.02 | 16.98 | | | | | | | | |
| **Entrance Cable** | | | | | | | | | | | | | | | | |
| | Virtual Collocation - Cable Installation Charge, per cable | | | AMTFS | ESPCX | | 859.71 | | 22.49 | | | | | | | |
| | Virtual Collocation - Cable Support Structure, per cable | | | AMTFS | ESPSX | 14.97 | | | | | | | | | | |
| **COLLOCATION IN THE REMOTE SITE** | | | | | | | | | | | | | | | | |
| **Physical Remote Site Collocation** | | | | | | | | | | | | | | | | |
| | Physical Collocation in the Remote Site - Application Fee | | | CLORS | PE1RA | | 307.70 | | 168.22 | | | | | | | |
| | Cabinet Space in the Remote Site per Bay/ Rack | | | CLORS | PE1RB | 201.42 | | | | | | | | | | |
| | Physical Collocation in the Remote Site - Security Access - Key | | | CLORS | PE1RD | | 13.10 | | | | | | | | | |
| | Physical Collocation in the Remote Site - Space Availability Report per Premises Requested | | | CLORS | PE1SR | | 115.87 | | | | | | | | | |

| COLLOCATION - Alabama | | | | | | | | | | | | | | Attachment: 4 Exh B | | | |
|---|---|---|---|---|---|---|---|---|---|---|---|---|---|---|---|---|---|
| CATEGORY | RATE ELEMENTS | Interim | Zone | BCS | USOC | RATES($) | | | | | Svc Order Submitted Elec per LSR | Svc Order Submitted Manually per LSR | Incremental Charge - Manual Svc Order vs. Electronic-1st | Incremental Charge - Manual Svc Order vs. Electronic-Add'l | Incremental Charge - Manual Svc Order vs. Electronic-Disc 1st | Incremental Charge - Manual Svc Order vs. Electronic-Disc Add'l |
| | | | | | | Rec | Nonrecurring | | Nonrecurring Disconnect | | OSS Rates($) | | | | | |
| | | | | | | | First | Add'l | First | Add'l | SOMEC | SOMAN | SOMAN | SOMAN | SOMAN | SOMAN |
| | Physical Collocation in the Remote Site - Remote Site CLLI Code Request, per CLLI Code Requested | | | CLORS | PE1RE | | 37.56 | | | | | | | | | |
| | Remote Site DLEC Data (BRSDD), per Compact Disk, per CO | | | CLORS | PE1RR | | 233.38 | | | | | | | | | |
| | Power, DC Power Provisioning (Alabama Only ICB Rate) | | | | | | | | | | | | | | | |
| | Physical Collocation - Security Escort for Basic Time - normally scheduled work, per half hour | | | CLORS | PE1BT | | 16.93 | 10.73 | | | | | | | | |
| | Physical Collocation - Security Escort for Overtime - outside of normally scheduled working hours on a scheduled work day, per half hour | | | CLORS | PE1OT | | 22.05 | 13.86 | | | | | | | | |
| | Physical Collocation - Security Escort for Premium Time - outside of scheduled work day, per half hour | | | CLORS | PE1PT | | 27.17 | 16.98 | | | | | | | | |
| **Adjacent Remote Site Collocation** | | | | | | | | | | | | | | | | |
| | Remote Site-Adjacent Collocation-Application Fee | | | CLORS | PE1RU | | 755.62 | 755.62 | | | | | | | | |
| | Remote Site-Adjacent Collocation - Real Estate, per square foot | | | CLORS | PE1RT | 0.134 | | | | | | | | | | |
| | Remote Site-Adjacent Collocation - AC Power, per breaker amp | | | CLORS | PE1RS | 6.27 | | | | | | | | | | |
| **NOTE: If Security Escort and/or Add'l Engineering Fees become necessary for adjacent remote site collocation, the Parties will negotiate appropriate rates.** | | | | | | | | | | | | | | | | |
| **Virtual Remote Site Collocation** | | | | | | | | | | | | | | | | |
| | Virtual Collocation in the Remote Site - Application Fee | | | VE1RS | VE1RB | | 307.70 | 307.70 | 168.22 | 168.22 | | | | | | |
| | Virtual Collocation in the Remote Site - Per Bay/Rack of Space | | | VE1RS | VE1RC | 201.42 | | | | | | | | | | |
| | Virtual Collocation in the Remote Site - Space Availability Report per Premises requested | | | VE1RS | VE1RR | | 115.87 | 115.87 | | | | | | | | |
| | Virtual Collocation in the Remote Site - Remote Site CLLI Code Request, per CLLI Code Requested | | | VE1RS | VE1RL | | 37.56 | 37.56 | | | | | | | | |
| **ADJACENT COLLOCATION** | | | | | | | | | | | | | | | | |
| | Adjacent Collocation - Space Charge per Sq. Ft. | | | CLOAC | PE1JA | 0.14 | | | | | | | | | | |
| | Adjacent Collocation - Electrical Facility Charge per Linear Ft. | | | CLOAC | PE1JC | 5.41 | | | | | | | | | | |
| | Adjacent Collocation - 2-Wire Cross-Connects | | | UEANL,UEQ,UEA,UCL, UAL, UHL, UDN | PE1JE | 0.02 | 12.30 | 11.80 | 6.03 | 5.44 | | | | | | |
| | Adjacent Collocation - 4-Wire Cross-Connects | | | UEA,UHL,UDL,UCL | PE1JF | 0.04 | 12.39 | 11.87 | 6.39 | 5.73 | | | | | | |
| | Adjacent Collocation - DS1 Cross-Connects | | | USL | PE1JG | 1.03 | 22.03 | 15.93 | 6.40 | 5.79 | | | | | | |
| | Adjacent Collocation - DS3 Cross-Connects | | | UE3 | PE1JH | 13.95 | 20.89 | 15.20 | 7.38 | 5.92 | | | | | | |
| | Adjacent Collocation - 2-Fiber Cross-Connect | | | CLOAC | PE1JJ | 2.36 | 20.89 | 15.20 | 7.38 | 5.92 | | | | | | |
| | Adjacent Collocation - 4-Fiber Cross-Connect | | | CLOAC | PE1JK | 4.52 | 25.55 | 19.86 | 9.71 | 8.25 | | | | | | |
| | Adjacent Collocation - Application Fee | | | CLOAC | PE1JB | | 1,576.69 | | 0.51 | | | | | | | |
| | Adjacent Collocation - 120V, Single Phase Standby Power Rate per AC Breaker Amp | | | CLOAC | PE1JL | 4.91 | | | | | | | | | | |
| | Adjacent Collocation - 240V, Single Phase Standby Power Rate per AC Breaker Amp | | | CLOAC | PE1JM | 9.84 | | | | | | | | | | |
| | Adjacent Collocation - 120V, Three Phase Standby Power Rate per AC Breaker Amp | | | CLOAC | PE1JN | 14.74 | | | | | | | | | | |
| | Adjacent Collocation - 277V, Three Phase Standby Power Rate per AC Breaker Amp | | | CLOAC | PE1JO | 34.06 | | | | | | | | | | |
| | Adjacent Collocation - DC power provisioning (Alabama Only Mandate ICB) | | | | | | | | | | | | | | | |
| | Note: ICB means Individual Case Basis | | | | | | | | | | | | | | | |
| **Note: Rates displaying an "I" in Interim column are interim as a result of a Commission order.** | | | | | | | | | | | | | | | | |

| COLLOCATION - Louisiana | | | | | | | | | | | | | | Attachment: 4 Exh B | | | |
|---|---|---|---|---|---|---|---|---|---|---|---|---|---|---|---|---|---|
| CATEGORY | | RATE ELEMENTS | Interim | Zone | BCS | USOC | RATES($) | | | | | Svc Order Submitted Elec per LSR | Svc Order Submitted Manually per LSR | Incremental Charge - Manual Svc Order vs. Electronic-1st | Incremental Charge - Manual Svc Order vs. Electronic-Add'l | Incremental Charge - Manual Svc Order vs. Electronic-Disc 1st | Incremental Charge - Manual Svc Order vs. Electronic-Disc Add'l |
| | | | | | | | Rec | Nonrecurring | | Nonrecurring Disconnect | | OSS Rates($) | | | | | |
| | | | | | | | | First | Add'l | First | Add'l | SOMEC | SOMAN | SOMAN | SOMAN | SOMAN | SOMAN |
| **PHYSICAL COLLOCATION** | | | | | | | | | | | | | | | | | |
| | **Application** | | | | | | | | | | | | | | | | |
| | | Physical Collocation - Initial Application Fee | | | CLO | PE1BA | | 1,837.24 | | | | | | | | | |
| | | Physical Collocation - Subsequent Application Fee | | | CLO | PE1CA | | 1,533.41 | | | | | | | | | |
| | | Physical Collocation - Co-Carrier Cross Connects/Direct Connect, Application Fee, per application | | | CLO | PE1DT | | 583.30 | | | | | | | | | |
| | | Physical Collocation Administrative Only - Application Fee | | | CLO | PE1BL | | 741.97 | | | | | | | | | |
| | | Physical Collocation - Application Cost, Simple Augment | | | CLO | PE1KS | | 596.35 | | 1.22 | | | | | | | |
| | | Physical Collocation - Application Cost, Minor Augment | | | CLO | PE1KM | | 836.18 | | 1.22 | | | | | | | |
| | | Physical Collocation - Application Cost, Intermediate Augment | | | CLO | PE1K1 | | 1,061.00 | | 1.22 | | | | | | | |
| | | Physical Collocation - Application Cost - Major Augment | | | CLO | PE1KJ | | 2,418.00 | | 1.22 | | | | | | | |
| | **Space Preparation** | | | | | | | | | | | | | | | | |
| | | Physical Collocation - Floor Space, per sq feet | | | CLO | PE1PJ | 5.30 | | | | | | | | | | |
| | | Physical Collocation - Space Enclosure, welded wire, first 50 square feet | | | CLO | PE1BX | 166.40 | | | | | | | | | | |
| | | Physical Collocation - Space enclosure, welded wire, first 100 square feet | | | CLO | PE1BW | 184.50 | | | | | | | | | | |
| | | Physical Collocation - Space enclosure, welded wire, each additional 50 square feet | | | CLO | PE1CW | 18.10 | | | | | | | | | | |
| | | Physical Collocation - Space Preparation - C.O. Modification per square ft. | | | CLO | PE1SK | 2.31 | | | | | | | | | | |
| | | Physical Collocation - Space Preparation, Common Systems Modifications-Cageless, per square foot | | | CLO | PE1SL | 2.70 | | | | | | | | | | |
| | | Physical Collocation - Space Preparation - Common Systems Modifications-Caged, per cage | | | CLO | PE1SM | 91.60 | | | | | | | | | | |
| | | Physical Collocation - Space Preparation - Firm Order Processing | | | CLO | PE1SJ | | 583.33 | | | | | | | | | |
| | | Physical Collocation - Space Availability Report, per Central Office Requested | | | CLO | PE1SR | | 1,044.07 | | | | | | | | | |
| | **Power** | | | | | | | | | | | | | | | | |
| | | Physical Collocation - Power, -48V DC Power - per Fused Amp Requested | | | CLO | PE1PL | 8.32 | | | | | | | | | | |
| | | Physical Collocation - Power, 120V AC Power, Single Phase, per Breaker Amp | | | CLO | PE1FB | 5.45 | | | | | | | | | | |
| | | Physical Collocation - Power, 240V AC Power, Single Phase, per Breaker Amp | | | CLO | PE1FD | 10.92 | | | | | | | | | | |
| | | Physical Collocation - Power, 120V AC Power, Three Phase, per Breaker Amp | | | CLO | PE1FE | 16.37 | | | | | | | | | | |
| | | Physical Collocation - Power, 277V AC Power, Three Phase, per Breaker Amp | | | CLO | PE1FG | 37.80 | | | | | | | | | | |
| | **Cross Connects (Cross Connects, Co-Carrier Cross Connects, and Ports)** | | | | | | | | | | | | | | | | |
| | | Physical Collocation - 2-wire cross-connect, loop, provisioning | | | UEANL,UEQ, UNCNX, UEA, UCL, UAL, UHL, UDN, UNCVX | PE1P2 | 0.0318 | 11.94 | 11.46 | | | | | | | | |
| | | Physical Collocation - 4-wire cross-connect, loop, provisioning | | | UEA, UHL, UNCVX, UNCDX, UCL, UDL | PE1P4 | 0.0636 | 12.04 | 11.53 | | | | | | | | |
| | | Physical Collocation -DS1 Cross-Connect for Physical Collocation, provisioning | | | WDS1L, WDS1S, UXTD1, ULDD1, USLEL, UNLD1, U1TD1, UNC1X, UEPSR, UEPSB, UEPSE, UEPSP, USL, UEPEX, UEPDX | PE1P1 | 1.04 | 21.39 | 15.47 | | | | | | | | |

| COLLOCATION - Louisiana | | | | | | | | | | | | | | Attachment: 4 Exh B | | | |
|---|---|---|---|---|---|---|---|---|---|---|---|---|---|---|---|---|---|
| CATEGORY | | RATE ELEMENTS | Interim | Zone | BCS | USOC | RATES($) | | | | | Svc Order Submitted Elec per LSR | Svc Order Submitted Manually per LSR | Incremental Charge - Manual Svc Order vs. Electronic-1st | Incremental Charge - Manual Svc Order vs. Electronic-Add'l | Incremental Charge - Manual Svc Order vs. Electronic-Disc 1st | Incremental Charge - Manual Svc Order vs. Electronic-Disc Add'l |
| | | | | | | | Rec | Nonrecurring | | Nonrecurring Disconnect | | OSS Rates($) | | | | | |
| | | | | | | | | First | Add'l | First | Add'l | SOMEC | SOMAN | SOMAN | SOMAN | SOMAN | SOMAN |
| | | Physical Collocation - DS3 Cross-Connect, provisioning | | | UE3, U1TD3, UXTD3, UXTS1, UNC3X, UNCSX, ULDD3, U1TS1, ULDS1, UNLD3, UEPEX, UEPDX, UEPSR, UEPSB, UEPSE, UEPSP | PE1P3 | 13.21 | 20.28 | 14.76 | | | | | | | | |
| | | Physical Collocation - 2-Fiber Cross-Connect | | | CLO, ULDO3, ULD12, ULD48, U1TO3, U1T12, U1T48, UDLO3, UDL12, UDF | PE1F2 | 2.62 | 20.28 | 14.76 | | | | | | | | |
| | | Physical Collocation - 4-Fiber Cross-Connect | | | ULDO3, ULD12, ULD48, U1TO3, U1T12, U1T48, UDLO3, UDL12, UDF, UDFCX | PE1F4 | 4.65 | 24.81 | 19.29 | | | | | | | | |
| | | Physical Collocation - Co-Carrier Cross Connects/Direct Connect - Fiber Cable Support Structure, per linear foot, per cable. | | | CLO | PE1ES | 0.001 | | | | | | | | | | |
| | | Physical Collocation - Co-Carrier Cross Connect/Direct Connect - Copper/Coax Cable Support Structure, per linear foot, per cable. | | | CLO | PE1DS | 0.0015 | | | | | | | | | | |
| | | Physical Collocation 2-Wire Cross Connect, Port | | | UEPSR, UEPSP, UEPSE, UEPSB, UEPSX, UEP2C | PE1R2 | 0.0318 | 11.94 | 11.46 | | | | | | | | |
| | | Physical Collocation 4-Wire Cross Connect, Port | | | UEPEX, UEPDD | PE1R4 | 0.0636 | 12.04 | 11.53 | | | | | | | | |
| | **Security** | | | | | | | | | | | | | | | | |
| | | Physical Collocation - Security Escort for Basic Time - normally scheduled work, per half hour | | | CLO | PE1BT | | 16.44 | 10.42 | | | | | | | | |
| | | Physical Collocation - Security Escort for Overtime - outside of normally scheduled working hours on a scheduled work day, per half hour | | | CLO | PE1OT | | 21.41 | 13.45 | | | | | | | | |
| | | Physical Collocation - Security Escort for Premium Time - outside of scheduled work day, per half hour | | | CLO | PE1PT | | 26.38 | 16.49 | | | | | | | | |
| | | Physical Collocation - Security Access System - Security System per Central Office, per Sq. Ft. | | | CLO | PE1AY | 0.0224 | | | | | | | | | | |
| | | Physical Collocation -Security Access System - New Card Activation, per Card Activation (First), per State | | | CLO | PE1A1 | 0.0579 | 27.50 | | | | | | | | | |
| | | Physical Collocation-Security Access System-Administrative Change, existing Access Card, per Request, per State, per Card | | | CLO | PE1AA | | 7.74 | | | | | | | | | |
| | | Physical Collocation - Security Access System - Replace Lost or Stolen Card, per Card | | | CLO | PE1AR | | 22.64 | | | | | | | | | |
| | | Physical Collocation - Security Access - Initial Key, per Key | | | CLO | PE1AK | | 13.01 | | | | | | | | | |
| | | Physical Collocation - Security Access - Key, Replace Lost or Stolen Key, per Key | | | CLO | PE1AL | | 13.01 | | | | | | | | | |
| | **CFA** | | | | | | | | | | | | | | | | |
| | | Physical Collocation - CFA Information Resend Request, per premises, per arrangement, per request | | | CLO | PE1C9 | | 77.43 | | | | | | | | | |
| | **Cable Records** | | | | | | | | | | | | | | | | |
| | | Recurring Collocation Cable Records - per request | | | CLO | PE1CU | 10.97 | | | | | | | | | | |
| | | Recurring Collocation Cable Records - VG/DS0 Cable, per cable record | | | CLO | PE1CE | 5.29 | | | | | | | | | | |
| | | Recurring Collocation Cable Records - VG/DS0 Cable, per each 100 pair | | | CLO | PE1CT | 0.08 | | | | | | | | | | |
| | | Recurring Collocation Cable Records - DS1, per T1TIE | | | CLO | PE1C2 | 0.04 | | | | | | | | | | |
| | | Recurring Collocation Cable Records - DS3, per T3TIE | | | CLO | PE1C4 | 0.13 | | | | | | | | | | |

| COLLOCATION - Louisiana | | | | | | | | | | | | | | Attachment: 4 Exh B | | | |
|---|---|---|---|---|---|---|---|---|---|---|---|---|---|---|---|---|---|
| CATEGORY | | RATE ELEMENTS | Interim | Zone | BCS | USOC | RATES($) | | | | | Svc Order Submitted Elec per LSR | Svc Order Submitted Manually per LSR | Incremental Charge - Manual Svc Order vs. Electronic-1st | Incremental Charge - Manual Svc Order vs. Electronic-Add'l | Incremental Charge - Manual Svc Order vs. Electronic-Disc 1st | Incremental Charge - Manual Svc Order vs. Electronic-Disc Add'l |
| | | | | | | | Rec | Nonrecurring | | Nonrecurring Disconnect | | OSS Rates($) | | | | | |
| | | | | | | | | First | Add'l | First | Add'l | SOMEC | SOMAN | SOMAN | SOMAN | SOMAN | SOMAN |
| | | Recurring Collocation Cable Records - Fiber Cable, per 99 fiber records | | | CLO | PE1CG | 1.37 | | | | | | | | | | |
| | | Physical Collocation, Cable Records,CAT5/RJ45 | | | CLO | PE1C6 | 0.04 | | | | | | | | | | |
| | **Virtual to Physical** | | | | | | | | | | | | | | | | |
| | | Physical Collocation - Virtual to Physical Collocation Relocation, per Voice Grade Circuit | | | CLO | PE1BV | | 33.00 | | | | | | | | | |
| | | Physical Collocation - Virtual to Physical Collocation Relocation, per DSO Circuit | | | CLO | PE1BO | | 33.00 | | | | | | | | | |
| | | Physical Collocation - Virtual to Physical Collocation Relocation, per DS1 Circuit | | | CLO | PE1B1 | | 52.00 | | | | | | | | | |
| | | Physical Collocation - Virtual to Physical Collocation Relocation, per DS3 Circuit | | | CLO | PE1B3 | | 52.00 | | | | | | | | | |
| | | Physical Collocation - Virtual to Physical Collocation In-Place, Per Voice Grade Circuit | | | CLO | PE1BR | | 23.00 | | | | | | | | | |
| | | Physical Collocation Virtual to Physical Collocation In-Place, Per DSO Circuit | | | CLO | PE1BP | | 23.00 | | | | | | | | | |
| | | Physical Collocation - Virtual to Physical Collocation In-Place, Per DS1 Circuit | | | CLO | PE1BS | | 33.00 | | | | | | | | | |
| | | Physical Collocation - Virtual to Physical Collocation In-Place, per DS3 Circuit | | | CLO | PE1BE | | 37.00 | | | | | | | | | |
| | **Entrance Cable** | | | | | | | | | | | | | | | | |
| | | Physical Collocation - Fiber Cable Installation, Pricing, non-recurring charge, per Entrance Cable | | | CLO | PE1BD | | 841.54 | | | | | | | | | |
| | | Physical Collocation - Fiber Cable Support Structure, per Entrance Cable | | | CLO | PE1PM | 18.31 | | | | | | | | | | |
| | | Physical Collocation - Fiber Entrance Cable Installation, per Fiber | | | CLO | PE1ED | | 3.88 | | | | | | | | | |
| **VIRTUAL COLLOCATION** | | | | | | | | | | | | | | | | | |
| | **Application** | | | | | | | | | | | | | | | | |
| | | Virtual Collocation - Application Fee | | | AMTFS | EAF | | 1,770.40 | | | | | | | | | |
| | | Virtual Collocation - Co-Carrier Cross Connects/Direct Connect, Application Fee, per application | | | AMTFS | VE1CA | | 583.30 | | | | | | | | | |
| | | Virtual Collocation Administrative Only - Application Fee | | | AMTFS | VE1AF | | 741.97 | | | | | | | | | |
| | **Space Preparation** | | | | | | | | | | | | | | | | |
| | | Virtual Collocation - Floor Space, per sq. ft. | | | AMTFS | ESPVX | 3.20 | | | | | | | | | | |
| | **Power** | | | | | | | | | | | | | | | | |
| | | Virtual Collocation - Power, per fused amp | | | AMTFS | ESPAX | 8.32 | | | | | | | | | | |
| | **Cross Connects (Cross Connects, Co-Carrier Cross Connects, and Ports)** | | | | | | | | | | | | | | | | |
| | | Virtual Collocation - 2-wire cross-connect, loop, provisioning | | | UEANL, UEA, UDN, UAL, UHL, UCL, UEQ, UNCVX, UNCDX, UNCNX | UEAC2 | 0.0296 | 11.94 | 11.46 | | | | | | | | |
| | | Virtual Collocation - 4-wire cross-connect, loop, provisioning | | | UEA, UHL, UCL, UDL, UNCVX, UNCDX | UEAC4 | 0.0591 | 12.04 | 11.53 | | | | | | | | |
| | | Virtual collocation - Special Access & UNE, cross-connect per DS1 | | | ULR, UXTD1, UNC1X, ULDD1, U1TD1, USLEL, UNLD1, USL, UEPEX, UEPDX | CNC1X | 1.04 | 21.39 | 15.47 | | | | | | | | |
| | | Virtual collocation - Special Access & UNE, cross-connect per DS3 | | | USL, UE3, U1TD3, UXTS1, UXTD3, UNC3X, UNCSX, ULDD3, U1TS1, ULDS1, UDLSX, UNLD3 | CND3X | 13.21 | 20.28 | 14.76 | | | | | | | | |

| COLLOCATION - Louisiana | | | | | | | | | | | | | | Attachment: 4 Exh B | | | |
|---|---|---|---|---|---|---|---|---|---|---|---|---|---|---|---|---|---|
| CATEGORY | | RATE ELEMENTS | Interim | Zone | BCS | USOC | RATES($) | | | | | Svc Order Submitted Elec per LSR | Svc Order Submitted Manually per LSR | Incremental Charge - Manual Svc Order vs. Electronic-1st | Incremental Charge - Manual Svc Order vs. Electronic-Add'l | Incremental Charge - Manual Svc Order vs. Electronic-Disc 1st | Incremental Charge - Manual Svc Order vs. Electronic-Disc Add'l |
| | | | | | | | Rec | Nonrecurring | | Nonrecurring Disconnect | | OSS Rates($) | | | | | |
| | | | | | | | | First | Add'l | First | Add'l | SOMEC | SOMAN | SOMAN | SOMAN | SOMAN | SOMAN |
| | | Virtual Collocation - 2-Fiber Cross Connects | | | UDL12, UDLO3, U1T48, U1T12, U1TO3, ULDO3, ULD12, ULD48, UDF | CNC2F | 2.65 | 20.29 | 14.76 | | | | | | | | |
| | | Virtual Collocation - 4-Fiber Cross Connects | | | UDL12, UDLO3, U1T48, U1T12, U1TO3, ULDO3, ULD12, ULD48, UDF | CNC4F | 5.31 | 24.81 | 19.29 | | | | | | | | |
| | | Virtual Collocation - Co-Carrier Cross Connects/Direct Connect - Fiber Cable Support Structure, per linear foot, per cable | | | AMTFS | VE1CB | 0.001 | | | | | | | | | | |
| | | Virtual Collocation - Co-Carrier Cross Connects/Direct Connect - Copper/Coax Cable Support Structure, per linear foot, per cable | | | AMTFS | VE1CD | 0.0015 | | | | | | | | | | |
| | | Virtual Collocation 2-Wire Cross Connect, Port | | | UEPSX, UEPSB, UEPSE, UEPSP, UEPSR, UEP2C | VE1R2 | 0.0296 | 11.94 | 11.46 | | | | | | | | |
| | | Virtual Collocation 4-Wire Cross Connect, Port | | | UEPDD, UEPEX | VE1R4 | 0.0591 | 12.04 | 11.53 | | | | | | | | |
| | **CFA** | | | | | | | | | | | | | | | | |
| | | Virtual Collocation - CFA Information Resend Request, per Premises, per Arrangement, per request | | | AMTFS | VE1QR | | 77.43 | | | | | | | | | |
| | **Cable Records** | | | | | | | | | | | | | | | | |
| | | Virtual Collocation Cable Records - per request(LA only) | | | AMTFS | VE1BG | 10.97 | | | | | | | | | | |
| | | Virtual Collocation Cable Records - VG/DS0 Cable, per cable record(LA only) | | | AMTFS | VE1BH | 5.29 | | | | | | | | | | |
| | | Virtual Collocation Cable Records - VG/DS0 Cable, per each 100 pair(LA only) | | | AMTFS | VE1BJ | 0.08 | | | | | | | | | | |
| | | Virtual Collocation Cable Records - DS1, per T1TIE(LA only) | | | AMTFS | VE1BK | 0.04 | | | | | | | | | | |
| | | Virtual Collocation Cable Records - DS3, per T3TIE(LA only) | | | AMTFS | VE1BL | 0.13 | | | | | | | | | | |
| | | Virtual Collocation Cable Records - Fiber Cable, per 99 fiber records(LA only) | | | AMTFS | VE1BM | 1.37 | | | | | | | | | | |
| | | Virtual Collocation Cable Records - CAT 5/RJ45 (LA only) | | | AMTFS | VE1B6 | 0.04 | | | | | | | | | | |
| | **Security** | | | | | | | | | | | | | | | | |
| | | Virtual collocation - Security escort, basic time, normally scheduled work hours | | | AMTFS | SPTBX | | 16.44 | 10.42 | | | | | | | | |
| | | Virtual collocation - Security escort, overtime, outside of normally scheduled work hours on a normal working day | | | AMTFS | SPTOX | | 21.41 | 13.45 | | | | | | | | |
| | | Virtual collocation - Security escort, premium time, outside of a scheduled work day | | | AMTFS | SPTPX | | 26.38 | 16.49 | | | | | | | | |
| | **Maintenance** | | | | | | | | | | | | | | | | |
| | | Virtual collocation - Maintenance in CO - Basic, per half hour | | | AMTFS | CTRLX | | 27.12 | 10.42 | | | | | | | | |
| | | Virtual collocation - Maintenance in CO - Overtime, per half hour | | | AMTFS | SPTOM | | 35.42 | 13.45 | | | | | | | | |
| | | Virtual collocation - Maintenance in CO - Premium per half hour | | | AMTFS | SPTPM | | 43.72 | 16.49 | | | | | | | | |
| | **Entrance Cable** | | | | | | | | | | | | | | | | |
| | | Virtual Collocation - Cable Installation Charge, per cable | | | AMTFS | ESPCX | | 841.54 | | | | | | | | | |
| | | Virtual Collocation - Cable Support Structure, per cable | | | AMTFS | ESPSX | 16.02 | | | | | | | | | | |
| **COLLOCATION IN THE REMOTE SITE** | | | | | | | | | | | | | | | | | |
| | **Physical Remote Site Collocation** | | | | | | | | | | | | | | | | |
| | | Physical Collocation in the Remote Site - Application Fee | | | CLORS | PE1RA | | 298.80 | | | | | | | | | |
| | | Cabinet Space in the Remote Site per Bay/ Rack | | | CLORS | PE1RB | 225.39 | | | | | | | | | | |
| | | Physical Collocation in the Remote Site - Security Access - Key | | | CLORS | PE1RD | | 13.01 | | | | | | | | | |
| | | Physical Collocation in the Remote Site - Space Availability Report per Premises Requested | | | CLORS | PE1SR | | 112.52 | | | | | | | | | |

| COLLOCATION - Louisiana | | | | | | | | | | | | | | Attachment: 4 Exh B | | | |
|---|---|---|---|---|---|---|---|---|---|---|---|---|---|---|---|---|---|
| CATEGORY | RATE ELEMENTS | Interim | Zone | BCS | USOC | RATES($) | | | | | Svc Order Submitted Elec per LSR | Svc Order Submitted Manually per LSR | Incremental Charge - Manual Svc Order vs. Electronic-1st | Incremental Charge - Manual Svc Order vs. Electronic-Add'l | Incremental Charge - Manual Svc Order vs. Electronic-Disc 1st | Incremental Charge - Manual Svc Order vs. Electronic-Disc Add'l |
| | | | | | | Rec | Nonrecurring | | Nonrecurring Disconnect | | OSS Rates($) | | | | | |
| | | | | | | | First | Add'l | First | Add'l | SOMEC | SOMAN | SOMAN | SOMAN | SOMAN | SOMAN |
| | Physical Collocation in the Remote Site - Remote Site CLLI Code Request, per CLLI Code Requested | | | CLORS | PE1RE | | 36.47 | | | | | | | | | |
| | Remote Site DLEC Data (BRSDD), per Compact Disk, per CO | | | CLORS | PE1RR | | 233.21 | | | | | | | | | |
| | Physical Collocation - Security Escort for Basic Time - normally scheduled work, per half hour | | | CLORS | PE1BT | | 16.44 | 10.42 | | | | | | | | |
| | Physical Collocation - Security Escort for Overtime - outside of normally scheduled working hours on a scheduled work day, per half hour | | | CLORS | PE1OT | | 21.41 | 13.45 | | | | | | | | |
| | Physical Collocation - Security Escort for Premium Time - outside of scheduled work day, per half hour | | | CLORS | PE1PT | | 26.38 | 16.49 | | | | | | | | |
| **Adjacent Remote Site Collocation** | | | | | | | | | | | | | | | | |
| | Remote Site-Adjacent Collocation-Application Fee | | | CLORS | PE1RU | | 755.62 | 755.62 | | | | | | | | |
| | Remote Site-Adjacent Collocation - Real Estate, per square foot | | | CLORS | PE1RT | 0.134 | | | | | | | | | | |
| | Remote Site-Adjacent Collocation - AC Power, per breaker amp | | | CLORS | PE1RS | 6.27 | | | | | | | | | | |
| **NOTE: If Security Escort and/or Add'l Engineering Fees become necessary for adjacent remote site collocation, the Parties will negotiate appropriate rates.** | | | | | | | | | | | | | | | | |
| **Virtual Remote Site Collocation** | | | | | | | | | | | | | | | | |
| | Virtual Collocation in the Remote Site - Application Fee | | | VE1RS | VE1RB | | 614.73 | | 336.08 | | | | | | | |
| | Virtual Collocation in the Remote Site - Per Bay/Rack of Space | | | VE1RS | VE1RC | 257.01 | | | | | | | | | | |
| | Virtual Collocation in the Remote Site - Space Availability Report per Premises requested | | | VE1RS | VE1RR | | 231.49 | | | | | | | | | |
| | Virtual Collocation in the Remote Site - Remote Site CLLI Code Request, per CLLI Code Requested | | | VE1RS | VE1RL | | 75.02 | | | | | | | | | |
| **ADJACENT COLLOCATION** | | | | | | | | | | | | | | | | |
| | Adjacent Collocation - Space Charge per Sq. Ft. | | | CLOAC | PE1JA | 0.0552 | | | | | | | | | | |
| | Adjacent Collocation - Electrical Facility Charge per Linear Ft. | | | CLOAC | PE1JC | 5.61 | | | | | | | | | | |
| | Adjacent Collocation - 2-Wire Cross-Connects | | | UEANL,UEQ,UEA,UCL, UAL, UHL, UDN | PE1JE | 0.0245 | 11.94 | 11.46 | | | | | | | | |
| | Adjacent Collocation - 4-Wire Cross-Connects | | | UEA,UHL,UDL,UCL | PE1JF | 0.0491 | 12.04 | 11.53 | | | | | | | | |
| | Adjacent Collocation - DS1 Cross-Connects | | | USL | PE1JG | 0.9605 | 21.39 | 15.47 | | | | | | | | |
| | Adjacent Collocation - DS3 Cross-Connects | | | UE3 | PE1JH | 13.01 | 20.28 | 14.76 | | | | | | | | |
| | Adjacent Collocation - 2-Fiber Cross-Connect | | | CLOAC | PE1JJ | 2.20 | 20.28 | 14.76 | | | | | | | | |
| | Adjacent Collocation - 4-Fiber Cross-Connect | | | CLOAC | PE1JK | 4.21 | 24.81 | 19.29 | | | | | | | | |
| | Adjacent Collocation - Application Fee | | | CLOAC | PE1JB | | 1,543.20 | | | | | | | | | |
| | Adjacent Collocation - 120V, Single Phase Standby Power Rate per AC Breaker Amp | | | CLOAC | PE1JL | 5.45 | | | | | | | | | | |
| | Adjacent Collocation - 240V, Single Phase Standby Power Rate per AC Breaker Amp | | | CLOAC | PE1JM | 10.92 | | | | | | | | | | |
| | Adjacent Collocation - 120V, Three Phase Standby Power Rate per AC Breaker Amp | | | CLOAC | PE1JN | 16.37 | | | | | | | | | | |
| | Adjacent Collocation - 277V, Three Phase Standby Power Rate per AC Breaker Amp | | | CLOAC | PE1JO | 37.80 | | | | | | | | | | |
| **Note: Rates displaying an "I" in Interim column are interim as a result of a Commission order.** | | | | | | | | | | | | | | | | |

| COLLOCATION - Mississippi | | | | | | | | | | | | | | Attachment: 4 Exh B | | | |
|---|---|---|---|---|---|---|---|---|---|---|---|---|---|---|---|---|---|
| CATEGORY | | RATE ELEMENTS | Interim | Zone | BCS | USOC | RATES($) | | | | | Svc Order Submitted Elec per LSR | Svc Order Submitted Manually per LSR | Incremental Charge - Manual Svc Order vs. Electronic-1st | Incremental Charge - Manual Svc Order vs. Electronic-Add'l | Incremental Charge - Manual Svc Order vs. Electronic-Disc 1st | Incremental Charge - Manual Svc Order vs. Electronic-Disc Add'l |
| | | | | | | | Rec | Nonrecurring | | Nonrecurring Disconnect | | OSS Rates($) | | | | | |
| | | | | | | | | First | Add'l | First | Add'l | SOMEC | SOMAN | SOMAN | SOMAN | SOMAN | SOMAN |
| **PHYSICAL COLLOCATION** | | | | | | | | | | | | | | | | | |
| | **Application** | | | | | | | | | | | | | | | | |
| | | Physical Collocation - Initial Application Fee | | | CLO | PE1BA | | 1,890.38 | | | | | | | | | |
| | | Physical Collocation - Subsequent Application Fee | | | CLO | PE1CA | | 1,575.69 | | | | | | | | | |
| | | Physical Collocation - Co-Carrier Cross Connects/Direct Connect, Application Fee, per application | | | CLO | PE1DT | | 583.13 | | | | | | | | | |
| | | Physical Collocation Administrative Only - Application Fee | | | CLO | PE1BL | | 740.76 | | | | | | | | | |
| | | Physical Collocation - Application Cost, Simple Augment | | | CLO | PE1KS | | 597.34 | | 1.22 | | | | | | | |
| | | Physical Collocation - Application Cost, Minor Augment | | | CLO | PE1KM | | 837.57 | | 1.22 | | | | | | | |
| | | Physical Collocation - Application Cost, Intermediate Augment | | | CLO | PE1K1 | | 1,063.00 | | 1.22 | | | | | | | |
| | | Physical Collocation - Application Cost - Major Augment | | | CLO | PE1KJ | | 2,422.00 | | 1.22 | | | | | | | |
| | **Space Preparation** | | | | | | | | | | | | | | | | |
| | | Physical Collocation - Floor Space, per sq feet | | | CLO | PE1PJ | 5.74 | | | | | | | | | | |
| | | Physical Collocation - Space Enclosure, welded wire, first 50 square feet | | | CLO | PE1BX | 165.23 | | | | | | | | | | |
| | | Physical Collocation - Space enclosure, welded wire, first 100 square feet | | | CLO | PE1BW | 183.20 | | | | | | | | | | |
| | | Physical Collocation - Space enclosure, welded wire, each additional 50 square feet | | | CLO | PE1CW | 17.97 | | | | | | | | | | |
| | | Physical Collocation - Space Preparation - C.O. Modification per square ft. | | | CLO | PE1SK | 2.30 | | | | | | | | | | |
| | | Physical Collocation - Space Preparation, Common Systems Modifications-Cageless, per square foot | | | CLO | PE1SL | 2.52 | | | | | | | | | | |
| | | Physical Collocation - Space Preparation - Common Systems Modifications-Caged, per cage | | | CLO | PE1SM | 85.67 | | | | | | | | | | |
| | | Physical Collocation - Space Preparation - Firm Order Processing | | | CLO | PE1SJ | | 604.19 | | | | | | | | | |
| | | Physical Collocation - Space Availability Report, per Central Office Requested | | | CLO | PE1SR | | 1,081.40 | | | | | | | | | |
| | **Power** | | | | | | | | | | | | | | | | |
| | | Physical Collocation - Power, -48V DC Power - per Fused Amp Requested | | | CLO | PE1PL | 7.33 | | | | | | | | | | |
| | | Physical Collocation - Power, 120V AC Power, Single Phase, per Breaker Amp | | | CLO | PE1FB | 5.29 | | | | | | | | | | |
| | | Physical Collocation - Power, 240V AC Power, Single Phase, per Breaker Amp | | | CLO | PE1FD | 10.58 | | | | | | | | | | |
| | | Physical Collocation - Power, 120V AC Power, Three Phase, per Breaker Amp | | | CLO | PE1FE | 15.87 | | | | | | | | | | |
| | | Physical Collocation - Power, 277V AC Power, Three Phase, per Breaker Amp | | | CLO | PE1FG | 36.65 | | | | | | | | | | |
| | **Cross Connects (Cross Connects, Co-Carrier Cross Connects, and Ports)** | | | | | | | | | | | | | | | | |
| | | Physical Collocation - 2-wire cross-connect, loop, provisioning | | | UEANL,UEQ, UNCNX, UEA, UCL, UAL, UHL, UDN, UNCVX | PE1P2 | 0.0288 | 12.37 | 11.87 | 6.04 | 5.45 | | | | | | |
| | | Physical Collocation - 4-wire cross-connect, loop, provisioning | | | UEA, UHL, UNCVX, UNCDX, UCL, UDL | PE1P4 | 0.0576 | 12.47 | 11.94 | 6.59 | 5.91 | | | | | | |
| | | Physical Collocation -DS1 Cross-Connect for Physical Collocation, provisioning | | | WDS1L, WDS1S, UXTD1, ULDD1, USLEL, UNLD1, U1TD1, UNC1X, UEPSR, UEPSB, UEPSE, UEPSP, USL, UEPEX, UEPDX | PE1P1 | 1.14 | 22.16 | 16.02 | 6.60 | 5.97 | | | | | | |

| COLLOCATION - Mississippi | | | | | | | | | | | | | | Attachment: 4 Exh B | | | |
|---|---|---|---|---|---|---|---|---|---|---|---|---|---|---|---|---|---|
| CATEGORY | | RATE ELEMENTS | Interim | Zone | BCS | USOC | RATES($) | | | | | Svc Order Submitted Elec per LSR | Svc Order Submitted Manually per LSR | Incremental Charge - Manual Svc Order vs. Electronic-1st | Incremental Charge - Manual Svc Order vs. Electronic-Add'l | Incremental Charge - Manual Svc Order vs. Electronic-Disc 1st | Incremental Charge - Manual Svc Order vs. Electronic-Disc Add'l |
| | | | | | | | Rec | Nonrecurring | | Nonrecurring Disconnect | | OSS Rates($) | | | | | |
| | | | | | | | | First | Add'l | First | Add'l | SOMEC | SOMAN | SOMAN | SOMAN | SOMAN | SOMAN |
| | | Physical Collocation - DS3 Cross-Connect, provisioning | | | UE3, U1TD3, UXTD3, UXTS1, UNC3X, UNCSX, ULDD3, U1TS1, ULDS1, UNLD3, UEPEX, UEPDX, UEPSR, UEPSB, UEPSE, UEPSP | PE1P3 | 14.49 | 21.01 | 15.29 | 7.61 | 6.10 | | | | | | |
| | | Physical Collocation - 2-Fiber Cross-Connect | | | CLO, ULDO3, ULD12, ULD48, U1TO3, U1T12, U1T48, UDLO3, UDL12, UDF | PE1F2 | 2.87 | 21.01 | 15.29 | 7.61 | 6.10 | | | | | | |
| | | Physical Collocation - 4-Fiber Cross-Connect | | | ULDO3, ULD12, ULD48, U1TO3, U1T12, U1T48, UDLO3, UDL12, UDF, UDFCX | PE1F4 | 5.10 | 25.70 | 19.97 | 10.01 | 8.50 | | | | | | |
| | | Physical Collocation - Co-Carrier Cross Connects/Direct Connect - Fiber Cable Support Structure, per linear foot, per cable. | | | CLO | PE1ES | 0.001 | | | | | | | | | | |
| | | Physical Collocation - Co-Carrier Cross Connect/Direct Connect - Copper/Coax Cable Support Structure, per linear foot, per cable. | | | CLO | PE1DS | 0.0015 | | | | | | | | | | |
| | | Physical Collocation 2-Wire Cross Connect, Port | | | UEPSR, UEPSP, UEPSE, UEPSB, UEPSX, UEP2C | PE1R2 | 0.0288 | 12.37 | 11.87 | 6.04 | 5.45 | | 15.75 | | | | |
| | | Physical Collocation 4-Wire Cross Connect, Port | | | UEPEX, UEPDD | PE1R4 | 0.0576 | 12.47 | 11.94 | 6.59 | 5.91 | | 15.75 | | | | |
| | **Security** | | | | | | | | | | | | | | | | |
| | | Physical Collocation - Security Escort for Basic Time - normally scheduled work, per half hour | | | CLO | PE1BT | | 17.02 | 10.79 | | | | | | | | |
| | | Physical Collocation - Security Escort for Overtime - outside of normally scheduled working hours on a scheduled work day, per half hour | | | CLO | PE1OT | | 22.17 | 13.94 | | | | | | | | |
| | | Physical Collocation - Security Escort for Premium Time - outside of scheduled work day, per half hour | | | CLO | PE1PT | | 27.32 | 17.08 | | | | | | | | |
| | | Physical Collocation - Security Access System, Security System, per Central Office | | | CLO | PE1AX | 75.23 | | | | | | | | | | |
| | | Physical Collocation -Security Access System - New Card Activation, per Card Activation (First), per State | | | CLO | PE1A1 | 0.0576 | 27.95 | | | | | | | | | |
| | | Physical Collocation-Security Access System-Administrative Change, existing Access Card, per Request, per State, per Card | | | CLO | PE1AA | | 7.84 | | | | | | | | | |
| | | Physical Collocation - Security Access System - Replace Lost or Stolen Card, per Card | | | CLO | PE1AR | | 22.91 | | | | | | | | | |
| | | Physical Collocation - Security Access - Initial Key, per Key | | | CLO | PE1AK | | 13.17 | | | | | | | | | |
| | | Physical Collocation - Security Access - Key, Replace Lost or Stolen Key, per Key | | | CLO | PE1AL | | 13.17 | | | | | | | | | |
| | **CFA** | | | | | | | | | | | | | | | | |
| | | Physical Collocation - CFA Information Resend Request, per premises, per arrangement, per request | | | CLO | PE1C9 | | 77.41 | | | | | | | | | |
| | **Cable Records - Note: The rates in the First & Additional columns will actually be billed as "Initial I" and "Subsequent S" respectively** | | | | | | | | | | | | | | | | |
| | | Physical Collocation - Cable Records, per request | | | CLO | PE1CR | | I 763.69 | S 490.94 | 133.77 | | | | | | | |
| | | Physical Collocation, Cable Records, VG/DS0 Cable, per cable record (maximum 3600 records) | | | CLO | PE1CD | | 328.81 | | 190.22 | | | | | | | |
| | | Physical Collocation, Cable Records, VG/DS0 Cable, per each 100 pair | | | CLO | PE1CO | | 4.84 | | 5.93 | | | | | | | |
| | | Physical Collocation, Cable Records, DS1, per T1 TIE | | | CLO | PE1C1 | | 2.27 | | 2.78 | | | | | | | |
| | | Physical Collocation, Cable Records, DS3, per T3 TIE | | | CLO | PE1C3 | | 7.92 | | 9.72 | | | | | | | |

| COLLOCATION - Mississippi | | | | | | | | | | | | | | Attachment: 4 Exh B | | | |
|---|---|---|---|---|---|---|---|---|---|---|---|---|---|---|---|---|---|
| CATEGORY | | RATE ELEMENTS | Interim | Zone | BCS | USOC | RATES($) | | | | | Svc Order Submitted Elec per LSR | Svc Order Submitted Manually per LSR | Incremental Charge - Manual Svc Order vs. Electronic-1st | Incremental Charge - Manual Svc Order vs. Electronic-Add'l | Incremental Charge - Manual Svc Order vs. Electronic-Disc 1st | Incremental Charge - Manual Svc Order vs. Electronic-Disc Add'l |
| | | | | | | | Rec | Nonrecurring | | Nonrecurring Disconnect | | OSS Rates($) | | | | | |
| | | | | | | | | First | Add'l | First | Add'l | SOMEC | SOMAN | SOMAN | SOMAN | SOMAN | SOMAN |
| | | Physical Collocation - Cable Records, Fiber Cable, per cable record (maximum 99 records) | | | CLO | PE1CB | | 84.98 | | 77.58 | | | | | | | |
| | | Physical Collocation, Cable Records,CAT5/RJ45 | | | CLO | PE1C5 | | 2.27 | | 2.78 | | | | | | | |
| | **Virtual to Physical** | | | | | | | | | | | | | | | | |
| | | Physical Collocation - Virtual to Physical Collocation Relocation, per Voice Grade Circuit | | | CLO | PE1BV | | 33.00 | | | | | | | | | |
| | | Physical Collocation - Virtual to Physical Collocation Relocation, per DSO Circuit | | | CLO | PE1BO | | 33.00 | | | | | | | | | |
| | | Physical Collocation - Virtual to Physical Collocation Relocation, per DS1 Circuit | | | CLO | PE1B1 | | 52.00 | | | | | | | | | |
| | | Physical Collocation - Virtual to Physical Collocation Relocation, per DS3 Circuit | | | CLO | PE1B3 | | 52.00 | | | | | | | | | |
| | | Physical Collocation - Virtual to Physical Collocation In-Place, Per Voice Grade Circuit | | | CLO | PE1BR | | 23.00 | | | | | | | | | |
| | | Physical Collocation Virtual to Physical Collocation In-Place, Per DSO Circuit | | | CLO | PE1BP | | 23.00 | | | | | | | | | |
| | | Physical Collocation - Virtual to Physical Collocation In-Place, Per DS1 Circuit | | | CLO | PE1BS | | 33.00 | | | | | | | | | |
| | | Physical Collocation - Virtual to Physical Collocation In-Place, per DS3 Circuit | | | CLO | PE1BE | | 37.00 | | | | | | | | | |
| | **Entrance Cable** | | | | | | | | | | | | | | | | |
| | | Physical Collocation - Fiber Cable Installation, Pricing, non-recurring charge, per Entrance Cable | | | CLO | PE1BD | | 926.27 | | 22.62 | | | | | | | |
| | | Physical Collocation - Fiber Cable Support Structure, per Entrance Cable | | | CLO | PE1PM | 17.42 | | | | | | | | | | |
| | | Physical Collocation - Fiber Entrance Cable Installation, per Fiber | | | CLO | PE1ED | | 3.89 | | | | | | | | | |
| **VIRTUAL COLLOCATION** | | | | | | | | | | | | | | | | | |
| | **Application** | | | | | | | | | | | | | | | | |
| | | Virtual Collocation - Application Fee | | | AMTFS | EAF | | 1,212.25 | | 0.51 | | | | | | | |
| | | Virtual Collocation - Co-Carrier Cross Connects/Direct Connect, Application Fee, per application | | | AMTFS | VE1CA | | 583.13 | | | | | | | | | |
| | | Virtual Collocation Administrative Only - Application Fee | | | AMTFS | VE1AF | | 740.76 | | | | | | | | | |
| | **Space Preparation** | | | | | | | | | | | | | | | | |
| | | Virtual Collocation - Floor Space, per sq. ft. | | | AMTFS | ESPVX | 5.74 | | | | | | | | | | |
| | **Power** | | | | | | | | | | | | | | | | |
| | | Virtual Collocation - Power, per fused amp | | | AMTFS | ESPAX | 7.33 | | | | | | | | | | |
| | **Cross Connects (Cross Connects, Co-Carrier Cross Connects, and Ports)** | | | | | | | | | | | | | | | | |
| | | Virtual Collocation - 2-wire cross-connect, loop, provisioning | | | UEANL, UEA, UDN, UAL, UHL, UCL, UEQ, UNCVX, UNCDX, UNCNX | UEAC2 | 0.0268 | 12.37 | 11.87 | 6.04 | 5.45 | | | | | | |
| | | Virtual Collocation - 4-wire cross-connect, loop, provisioning | | | UEA, UHL, UCL, UDL, UNCVX, UNCDX | UEAC4 | 0.0536 | 12.47 | 11.94 | 6.59 | 5.91 | | | | | | |
| | | Virtual Collocation - Special Access & UNE, cross-connect per DS1 | | | ULR, UXTD1, UNC1X, ULDD1, U1TD1, USLEL, UNLD1, USL, UEPEX, UEPDX | CNC1X | 1.14 | 22.16 | 16.02 | 6.60 | 5.97 | | | | | | |
| | | Virtual collocation - Special Access & UNE, cross-connect per DS3 | | | USL, UE3, U1TD3, UXTS1, UXTD3, UNC3X, UNCSX, ULDD3, U1TS1, ULDS1, UDLSX, UNLD3 | CND3X | 14.49 | 21.01 | 15.29 | 7.61 | 6.10 | | | | | | |

| COLLOCATION - Mississippi | | | | | | | | | | | | | | Attachment: 4 Exh B | | | |
|---|---|---|---|---|---|---|---|---|---|---|---|---|---|---|---|---|---|
| CATEGORY | | RATE ELEMENTS | Interim | Zone | BCS | USOC | RATES($) | | | | | Svc Order Submitted Elec per LSR | Svc Order Submitted Manually per LSR | Incremental Charge - Manual Svc Order vs. Electronic-1st | Incremental Charge - Manual Svc Order vs. Electronic-Add'l | Incremental Charge - Manual Svc Order vs. Electronic-Disc 1st | Incremental Charge - Manual Svc Order vs. Electronic-Disc Add'l |
| | | | | | | | Rec | Nonrecurring | | Nonrecurring Disconnect | | OSS Rates($) | | | | | |
| | | | | | | | | First | Add'l | First | Add'l | SOMEC | SOMAN | SOMAN | SOMAN | SOMAN | SOMAN |
| | | Virtual Collocation - 2-Fiber Cross Connects | | | UDL12, UDLO3, U1T48, U1T12, U1TO3, ULDO3, ULD12, ULD48, UDF | CNC2F | 2.91 | 21.01 | 15.29 | 7.61 | 6.10 | | | | | | |
| | | Virtual Collocation - 4-Fiber Cross Connects | | | UDL12, UDLO3, U1T48, U1T12, U1TO3, ULDO3, ULD12, ULD48, UDF | CNC4F | 5.82 | 25.70 | 19.97 | 10.01 | 8.50 | | | | | | |
| | | Virtual Collocation - Co-Carrier Cross Connects/Direct Connect - Fiber Cable Support Structure, per linear foot, per cable | | | AMTFS | VE1CB | 0.001 | | | | | | | | | | |
| | | Virtual Collocation - Co-Carrier Cross Connects/Direct Connect - Copper/Coax Cable Support Structure, per linear foot, per cable | | | AMTFS | VE1CD | 0.0015 | | | | | | | | | | |
| | | Virtual Collocation 2-Wire Cross Connect, Port | | | UEPSX, UEPSB, UEPSE, UEPSP, UEPSR, UEP2C | VE1R2 | 0.0268 | 12.37 | 11.87 | 6.04 | 5.45 | | | | | | |
| | | Virtual Collocation 4-Wire Cross Connect, Port | | | UEPDD, UEPEX | VE1R4 | 0.0536 | 12.47 | 11.94 | 6.59 | 5.91 | | | | | | |
| | **CFA** | | | | | | | | | | | | | | | | |
| | | Virtual Collocation - CFA Information Resend Request, per Premises, per Arrangement, per request | | | AMTFS | VE1QR | | 77.41 | | | | | | | | | |
| | **Cable Records - Note: The rates in the First & Additional columns will actually be billed as "Initial I" & "Subsequent S" respectively** | | | | | | | | | | | | | | | | |
| | | Virtual Collocation Cable Records - per request | | | AMTFS | VE1BA | | 763.69 | 490.94 | 133.77 | | | | | | | |
| | | Virtual Collocation Cable Records - VG/DS0 Cable, per cable record | | | AMTFS | VE1BB | | 328.81 | | 190.22 | | | | | | | |
| | | Virtual Collocation Cable Records - VG/DS0 Cable, per each 100 pair | | | AMTFS | VE1BC | | 4.84 | | 5.93 | | | | | | | |
| | | Virtual Collocation Cable Records - DS1, per T1TIE | | | AMTFS | VE1BD | | 2.27 | | 2.78 | | | | | | | |
| | | Virtual Collocation Cable Records - DS3, per T3TIE | | | AMTFS | VE1BE | | 7.92 | | 9.72 | | | | | | | |
| | | Virtual Collocation Cable Records - Fiber Cable, per 99 fiber records | | | AMTFS | VE1BF | | 84.98 | | 77.58 | | | | | | | |
| | | Virtual Collocation Cable Records - CAT 5/RJ45 | | | AMTFS | VE1B5 | | 2.27 | | 2.78 | | | | | | | |
| | **Security** | | | | | | | | | | | | | | | | |
| | | Virtual collocation - Security escort, basic time, normally scheduled work hours | | | AMTFS | SPTBX | | 17.02 | 10.79 | | | | | | | | |
| | | Virtual collocation - Security escort, overtime, outside of normally scheduled work hours on a normal working day | | | AMTFS | SPTOX | | 22.17 | 13.94 | | | | | | | | |
| | | Virtual collocation - Security escort, premium time, outside of a scheduled work day | | | AMTFS | SPTPX | | 27.32 | 17.08 | | | | | | | | |
| | **Maintenance** | | | | | | | | | | | | | | | | |
| | | Virtual collocation - Maintenance in CO - Basic, per half hour | | | AMTFS | CTRLX | | 28.09 | 10.79 | | | | | | | | |
| | | Virtual collocation - Maintenance in CO - Overtime, per half hour | | | AMTFS | SPTOM | | 36.69 | 13.94 | | | | | | | | |
| | | Virtual collocation - Maintenance in CO - Premium per half hour | | | AMTFS | SPTPM | | 45.28 | 17.08 | | | | | | | | |
| | **Entrance Cable** | | | | | | | | | | | | | | | | |
| | | Virtual Collocation - Cable Installation Charge, per cable | | | AMTFS | ESPCX | | 926.27 | | 22.62 | | | | | | | |
| | | Virtual Collocation - Cable Support Structure, per cable | | | AMTFS | ESPSX | 15.24 | | | | | | | | | | |
| **COLLOCATION IN THE REMOTE SITE** | | | | | | | | | | | | | | | | | |
| | **Physical Remote Site Collocation** | | | | | | | | | | | | | | | | |
| | | Physical Collocation in the Remote Site - Application Fee | | | CLORS | PE1RA | | 309.48 | | 168.63 | | | | | | | |
| | | Cabinet Space in the Remote Site per Bay/ Rack | | | CLORS | PE1RB | 210.05 | | | | | | | | | | |
| | | Physical Collocation in the Remote Site - Security Access - Key | | | CLORS | PE1RD | | 13.17 | | | | | | | | | |
| | | Physical Collocation in the Remote Site - Space Availability Report per Premises Requested | | | CLORS | PE1SR | | 116.54 | | | | | | | | | |

| COLLOCATION - Mississippi | | | | | | | | | | | | | | Attachment: 4 Exh B | | | |
|---|---|---|---|---|---|---|---|---|---|---|---|---|---|---|---|---|---|
| CATEGORY | | RATE ELEMENTS | Interim | Zone | BCS | USOC | RATES($) | | | | | Svc Order Submitted Elec per LSR | Svc Order Submitted Manually per LSR | Incremental Charge - Manual Svc Order vs. Electronic-1st | Incremental Charge - Manual Svc Order vs. Electronic-Add'l | Incremental Charge - Manual Svc Order vs. Electronic-Disc 1st | Incremental Charge - Manual Svc Order vs. Electronic-Disc Add'l |
| | | | | | | | Rec | Nonrecurring | | Nonrecurring Disconnect | | OSS Rates($) | | | | | |
| | | | | | | | | First | Add'l | First | Add'l | SOMEC | SOMAN | SOMAN | SOMAN | SOMAN | SOMAN |
| | | Physical Collocation in the Remote Site - Remote Site CLLI Code Request, per CLLI Code Requested | | | CLORS | PE1RE | | 37.77 | | | | | | | | | |
| | | Remote Site DLEC Data (BRSDD), per Compact Disk, per CO | | | CLORS | PE1RR | | 233.14 | | | | | | | | | |
| | | Physical Collocation - Security Escort for Basic Time - normally scheduled work, per half hour | | | CLORS | PE1BT | | 17.02 | 10.79 | | | | | | | | |
| | | Physical Collocation - Security Escort for Overtime - outside of normally scheduled working hours on a scheduled work day, per half hour | | | CLORS | PE1OT | | 22.17 | 13.94 | | | | | | | | |
| | | Physical Collocation - Security Escort for Premium Time - outside of scheduled work day, per half hour | | | CLORS | PE1PT | | 27.32 | 17.08 | | | | | | | | |
| | **Adjacent Remote Site Collocation** | | | | | | | | | | | | | | | | |
| | | Remote Site-Adjacent Collocation-Application Fee | | | CLORS | PE1RU | | 755.62 | 755.62 | | | | | | | | |
| | | Remote Site-Adjacent Collocation - Real Estate, per square foot | | | CLORS | PE1RT | 0.134 | | | | | | | | | | |
| | | Remote Site-Adjacent Collocation - AC Power, per breaker amp | | | CLORS | PE1RS | 6.27 | | | | | | | | | | |
| | **NOTE: If Security Escort and/or Add'l Engineering Fees become necessary for adjacent remote site collocation, the Parties will negotiate appropriate rates.** | | | | | | | | | | | | | | | | |
| | **Virtual Remote Site Collocation** | | | | | | | | | | | | | | | | |
| | | Virtual Collocation in the Remote Site - Application Fee | | | VE1RS | VE1RB | | 309.48 | | 168.63 | | | | | | | |
| | | Virtual Collocation in the Remote Site - Per Bay/Rack of Space | | | VE1RS | VE1RC | 210.05 | | | | | | | | | | |
| | | Virtual Collocation in the Remote Site - Space Availability Report per Premises requested | | | VE1RS | VE1RR | | 116.54 | | | | | | | | | |
| | | Virtual Collocation in the Remote Site - Remote Site CLLI Code Request, per CLLI Code Requested | | | VE1RS | VE1RL | | 37.77 | | | | | | | | | |
| **ADJACENT COLLOCATION** | | | | | | | | | | | | | | | | | |
| | | Adjacent Collocation - Space Charge per Sq. Ft. | | | CLOAC | PE1JA | 0.0678 | | | | | | | | | | |
| | | Adjacent Collocation - Electrical Facility Charge per Linear Ft. | | | CLOAC | PE1JC | 4.68 | | | | | | | | | | |
| | | Adjacent Collocation - 2-Wire Cross-Connects | | | UEANL,UEQ,UEA,UCL, UAL, UHL, UDN | PE1JE | 0.0223 | 12.37 | 11.87 | 6.04 | 5.45 | | | | | | |
| | | Adjacent Collocation - 4-Wire Cross-Connects | | | UEA,UHL,UDL,UCL | PE1JF | 0.0446 | 12.47 | 11.94 | 6.59 | 5.91 | | | | | | |
| | | Adjacent Collocation - DS1 Cross-Connects | | | USL | PE1JG | 1.05 | 22.16 | 16.02 | 6.60 | 5.97 | | | | | | |
| | | Adjacent Collocation - DS3 Cross-Connects | | | UE3 | PE1JH | 14.27 | 21.01 | 15.29 | 7.61 | 6.10 | | | | | | |
| | | Adjacent Collocation - 2-Fiber Cross-Connect | | | CLOAC | PE1JJ | 2.42 | 21.01 | 15.29 | 7.61 | 6.10 | | | | | | |
| | | Adjacent Collocation - 4-Fiber Cross-Connect | | | CLOAC | PE1JK | 4.62 | 25.70 | 19.97 | 10.01 | 8.50 | | | | | | |
| | | Adjacent Collocation - Application Fee | | | CLOAC | PE1JB | | 1,585.83 | | | | | | | | | |
| | | Adjacent Collocation - 120V, Single Phase Standby Power Rate per AC Breaker Amp | | | CLOAC | PE1JL | 5.29 | | | | | | | | | | |
| | | Adjacent Collocation - 240V, Single Phase Standby Power Rate per AC Breaker Amp | | | CLOAC | PE1JM | 10.58 | | | | | | | | | | |
| | | Adjacent Collocation - 120V, Three Phase Standby Power Rate per AC Breaker Amp | | | CLOAC | PE1JN | 15.87 | | | | | | | | | | |
| | | Adjacent Collocation - 277V, Three Phase Standby Power Rate per AC Breaker Amp | | | CLOAC | PE1JO | 36.65 | | | | | | | | | | |
| | **Note: Rates displaying an "I" in Interim column are interim as a result of a Commission order.** | | | | | | | | | | | | | | | | |

| COLLOCATION - North Carolina | | | | | | | | | | | | | | Attachment: 4 Exh B | | | |
|---|---|---|---|---|---|---|---|---|---|---|---|---|---|---|---|---|---|
| CATEGORY | | RATE ELEMENTS | Interim | Zone | BCS | USOC | RATES($) | | | | | Svc Order Submitted Elec per LSR | Svc Order Submitted Manually per LSR | Incremental Charge - Manual Svc Order vs. Electronic-1st | Incremental Charge - Manual Svc Order vs. Electronic-Add'l | Incremental Charge - Manual Svc Order vs. Electronic-Disc 1st | Incremental Charge - Manual Svc Order vs. Electronic-Disc Add'l |
| | | | | | | | Rec | Nonrecurring | | Nonrecurring Disconnect | | OSS Rates($) | | | | | |
| | | | | | | | | First | Add'l | First | Add'l | SOMEC | SOMAN | SOMAN | SOMAN | SOMAN | SOMAN |
| **PHYSICAL COLLOCATION** | | | | | | | | | | | | | | | | | |
| | **Application** | | | | | | | | | | | | | | | | |
| | | Physical Collocation - Initial Application Fee | | | CLO | PE1BA | | 2,322.00 | | | | | | | | | |
| | | Physical Collocation - Subsequent Application Fee | | | CLO | PE1CA | | 2,311.00 | | | | | | | | | |
| | | Physical Collocation - Co-Carrier Cross Connects/Direct Connect, Application Fee, per application | | | CLO | PE1DT | | 317.20 | | | | | | | | | |
| | | Physical Collocation Administrative Only - Application Fee | | | CLO | PE1BL | | 741.44 | | | | | | | | | |
| | | Physical Collocation - Application Cost, Simple Augment | | | CLO | PE1KS | | 269.83 | | 1.15 | | | | | | | |
| | | Physical Collocation - Application Cost, Minor Augment | | | CLO | PE1KM | | 493.40 | | 1.15 | | | | | | | |
| | | Physical Collocation - Application Cost, Intermediate Augment | | | CLO | PE1K1 | | 1,012.00 | | 1.15 | | | | | | | |
| | | Physical Collocation - Application Cost - Major Augment | | | CLO | PE1KJ | | 2,343.00 | | 1.15 | | | | | | | |
| | **Space Preparation** | | | | | | | | | | | | | | | | |
| | | Physical Collocation - Floor Space, per sq feet | | | CLO | PE1PJ | 2.69 | | | | | | | | | | |
| | | Physical Collocation - Space Enclosure, welded wire, first 50 square feet | | | CLO | PE1BX | | 534.44 | | | | | | | | | |
| | | Physical Collocation - Space enclosure, welded wire, first 100 square feet | | | CLO | PE1BW | | 559.81 | | | | | | | | | |
| | | Physical Collocation - Space enclosure, welded wire, each additional 50 square feet | | | CLO | PE1CW | | 25.37 | | | | | | | | | |
| | | Physical Collocation - Space Preparation - C.O. Modification per square ft. | | | CLO | PE1SK | 2.42 | | | | | | | | | | |
| | | Physical Collocation - Space Preparation, Common Systems Modifications-Cageless, per square foot | | | CLO | PE1SL | 2.88 | | | | | | | | | | |
| | | Physical Collocation - Space Preparation - Common Systems Modifications-Caged, per cage | | | CLO | PE1SM | 97.98 | | | | | | | | | | |
| | | Physical Collocation - Space Preparation - Firm Order Processing | | | CLO | PE1SJ | | 1,196.00 | | | | | | | | | |
| | | Physical Collocation - Space Availability Report, per Central Office Requested | | | CLO | PE1SR | | 2,140.00 | | | | | | | | | |
| | **Power** | | | | | | | | | | | | | | | | |
| | | Physical Collocation - Power, -48V DC Power - per Fused Amp Requested | | | CLO | PE1PL | 7.65 | | | | | | | | | | |
| | | Physical Collocation - Power, 120V AC Power, Single Phase, per Breaker Amp | | | CLO | PE1FB | 5.50 | | | | | | | | | | |
| | | Physical Collocation - Power, 240V AC Power, Single Phase, per Breaker Amp | | | CLO | PE1FD | 11.01 | | | | | | | | | | |
| | | Physical Collocation - Power, 120V AC Power, Three Phase, per Breaker Amp | | | CLO | PE1FE | 16.51 | | | | | | | | | | |
| | | Physical Collocation - Power, 277V AC Power, Three Phase, per Breaker Amp | | | CLO | PE1FG | 38.12 | | | | | | | | | | |
| | **Cross Connects (Cross Connects, Co-Carrier Cross Connects, and Ports)** | | | | | | | | | | | | | | | | |
| | | Physical Collocation - 2-wire cross-connect, loop, provisioning | | | UEANL,UEQ, UNCNX, UEA, UCL, UAL, UHL, UDN, UNCVX | PE1P2 | 0.0309 | 19.77 | 14.95 | | | | | | | | |
| | | Physical Collocation - 4-wire cross-connect, loop, provisioning | | | UEA, UHL, UNCVX, UNCDX, UCL, UDL | PE1P4 | 0.0618 | 19.95 | 15.05 | | | | | | | | |
| | | Physical Collocation -DS1 Cross-Connect for Physical Collocation, provisioning | | | WDS1L, WDS1S, UXTD1, ULDD1, USLEL, UNLD1, U1TD1, UNC1X, UEPSR, UEPSB, UEPSE, UEPSP, USL, UEPEX, UEPDX | PE1P1 | 1.38 | 39.15 | 23.20 | | | | | | | | |

## COLLOCATION - North Carolina

Attachment: 4 Exh B

| CATEGORY | RATE ELEMENTS | Interim | Zone | BCS | USOC | RATES($) Rec | Nonrecurring First | Nonrecurring Add'l | Nonrecurring Disconnect First | Nonrecurring Disconnect Add'l | Svc Order Submitted Elec per LSR | Svc Order Submitted Manually per LSR | Incremental Charge - Manual Svc Order vs. Electronic-1st | Incremental Charge - Manual Svc Order vs. Electronic-Add'l | Incremental Charge - Manual Svc Order vs. Electronic-Disc 1st | Incremental Charge - Manual Svc Order vs. Electronic-Disc Add'l |
|---|---|---|---|---|---|---|---|---|---|---|---|---|---|---|---|---|
| | | | | | | | | | | | OSS Rates($) | | | | | |
| | | | | | | | | | | | SOMEC | SOMAN | SOMAN | SOMAN | SOMAN | SOMAN |
| | Physical Collocation - DS3 Cross-Connect, provisioning | | | UE3, U1TD3, UXTD3, UXTS1, UNC3X, UNCSX, ULDD3, U1TS1, ULDS1, UNLD3, UEPEX, UEPDX, UEPSR, UEPSB, UEPSE, UEPSP | PE1P3 | 17.62 | 38.25 | 21.94 | | | | | | | | |
| | Physical Collocation - 2-Fiber Cross-Connect | | | CLO, ULDO3, ULD12, ULD48, U1TO3, U1T12, U1T48, UDLO3, UDL12, UDF | PE1F2 | 3.50 | 38.25 | 21.94 | | | | | | | | |
| | Physical Collocation - 4-Fiber Cross-Connect | | | ULDO3, ULD12, ULD48, U1TO3, U1T12, U1T48, UDLO3, UDL12, UDF, UDFCX | PE1F4 | 6.20 | 43.96 | 26.17 | | | | | | | | |
| | Physical Collocation - Co-Carrier Cross Connects/Direct Connect - Fiber Cable Support Structure, per linear foot, per cable. | | | CLO | PE1ES | 0.0028 | | | | | | | | | | |
| | Physical Collocation - Co-Carrier Cross Connect/Direct Connect - Copper/Coax Cable Support Structure, per linear foot, per cable. | | | CLO | PE1DS | 0.0041 | | | | | | | | | | |
| | Physical Collocation 2-Wire Cross Connect, Port | | | UEPSR, UEPSP, UEPSE, UEPSB, UEPSX, UEP2C | PE1R2 | 0.0309 | 19.77 | 14.95 | | | | | 26.94 | 12.76 | | |
| | Physical Collocation 4-Wire Cross Connect, Port | | | UEPEX, UEPDD | PE1R4 | 0.0618 | 19.95 | 15.05 | | | | | 26.94 | 12.76 | | |
| **Security** | | | | | | | | | | | | | | | | |
| | Physical Collocation - Security Escort for Basic Time - normally scheduled work, per half hour | | | CLO | PE1BT | | 33.68 | 21.34 | | | | | | | | |
| | Physical Collocation - Security Escort for Overtime - outside of normally scheduled working hours on a scheduled work day, per half hour | | | CLO | PE1OT | | 43.87 | 27.57 | | | | | | | | |
| | Physical Collocation - Security Escort for Premium Time - outside of scheduled work day, per half hour | | | CLO | PE1PT | | 54.06 | 33.80 | | | | | | | | |
| | Physical Collocation - Security Access System - Security System per Central Office, per Sq. Ft. | | | CLO | PE1AY | 0.0135 | | | | | | | | | | |
| | Physical Collocation -Security Access System - New Card Activation, per Card Activation (First), per State | | | CLO | PE1A1 | 0.0622 | 15.00 | | | | | | | | | |
| | Physical Collocation-Security Access System-Administrative Change, existing Access Card, per Request, per State, per Card | | | CLO | PE1AA | | 15.51 | | | | | | | | | |
| | Physical Collocation - Security Access System - Replace Lost or Stolen Card, per Card | | | CLO | PE1AR | | 15.00 | | | | | | | | | |
| | Physical Collocation - Security Access - Initial Key, per Key | | | CLO | PE1AK | | 15.00 | | | | | | | | | |
| | Physical Collocation - Security Access - Key, Replace Lost or Stolen Key, per Key | | | CLO | PE1AL | | 15.00 | | | | | | | | | |
| **CFA** | | | | | | | | | | | | | | | | |
| | Physical Collocation - CFA Information Resend Request, per premises, per arrangement, per request | | | CLO | PE1C9 | | 77.48 | | | | | | | | | |
| **Cable Records - Note: The rates in the First & Additional columns will actually be billed as "Initial I" and "Subsequent S" respectively** | | | | | | | | | | | | | | | | |
| | Physical Collocation - Cable Records, per request | | | CLO | PE1CR | | I 1458 | S 937.29 | 245.00 | 245.00 | | | | | | |
| | Physical Collocation, Cable Records, VG/DS0 Cable, per cable record (maximum 3600 records) | | | CLO | PE1CD | | 622.69 | 622.69 | 346.35 | 346.35 | | | | | | |
| | Physical Collocation, Cable Records, VG/DS0 Cable, per each 100 pair | | | CLO | PE1CO | | 8.77 | 8.77 | 10.32 | 10.32 | | | | | | |
| | Physical Collocation, Cable Records, DS1, per T1 TIE | | | CLO | PE1C1 | | 4.35 | 4.35 | 5.11 | 5.11 | | | | | | |
| | Physical Collocation, Cable Records, DS3, per T3 TIE | | | CLO | PE1C3 | | 15.22 | 15.22 | 17.90 | 17.90 | | | | | | |

| COLLOCATION - North Carolina | | | | | | | | | | | | | | Attachment: 4 Exh B | | | |
|---|---|---|---|---|---|---|---|---|---|---|---|---|---|---|---|---|---|
| CATEGORY | | RATE ELEMENTS | Interim | Zone | BCS | USOC | RATES($) | | | | | Svc Order Submitted Elec per LSR | Svc Order Submitted Manually per LSR | Incremental Charge - Manual Svc Order vs. Electronic-1st | Incremental Charge - Manual Svc Order vs. Electronic-Add'l | Incremental Charge - Manual Svc Order vs. Electronic-Disc 1st | Incremental Charge - Manual Svc Order vs. Electronic-Disc Add'l |
| | | | | | | | Rec | Nonrecurring | | Nonrecurring Disconnect | | OSS Rates($) | | | | | |
| | | | | | | | | First | Add'l | First | Add'l | SOMEC | SOMAN | SOMAN | SOMAN | SOMAN | SOMAN |
| | | Physical Collocation - Cable Records, Fiber Cable, per cable record (maximum 99 records) | | | CLO | PE1CB | | 163.61 | 163.61 | 143.32 | 143.32 | | | | | | |
| | | Physical Collocation, Cable Records,CAT5/RJ45 | | | CLO | PE1C5 | | 2.27 | | 2.78 | | | | | | | |
| | **Virtual to Physical** | | | | | | | | | | | | | | | | |
| | | Physical Collocation - Virtual to Physical Collocation Relocation, per Voice Grade Circuit | | | CLO | PE1BV | | 33.00 | | | | | | | | | |
| | | Physical Collocation - Virtual to Physical Collocation Relocation, per DSO Circuit | | | CLO | PE1BO | | 33.00 | | | | | | | | | |
| | | Physical Collocation - Virtual to Physical Collocation Relocation, per DS1 Circuit | | | CLO | PE1B1 | | 52.00 | | | | | | | | | |
| | | Physical Collocation - Virtual to Physical Collocation Relocation, per DS3 Circuit | | | CLO | PE1B3 | | 52.00 | | | | | | | | | |
| | | Physical Collocation - Virtual to Physical Collocation In-Place, Per Voice Grade Circuit | | | CLO | PE1BR | | 23.00 | | | | | | | | | |
| | | Physical Collocation Virtual to Physical Collocation In-Place, Per DSO Circuit | | | CLO | PE1BP | | 23.00 | | | | | | | | | |
| | | Physical Collocation - Virtual to Physical Collocation In-Place, Per DS1 Circuit | | | CLO | PE1BS | | 33.00 | | | | | | | | | |
| | | Physical Collocation - Virtual to Physical Collocation In-Place, per DS3 Circuit | | | CLO | PE1BE | | 37.00 | | | | | | | | | |
| | **Entrance Cable** | | | | | | | | | | | | | | | | |
| | | Physical Collocation - Fiber Cable Installation, Pricing, non-recurring charge, per Entrance Cable | | | CLO | PE1BD | | 1,233.00 | | | | | | | | | |
| | | Physical Collocation - Fiber Cable Support Structure, per Entrance Cable | | | CLO | PE1PM | 20.57 | | | | | | | | | | |
| | | Physical Collocation - Fiber Entrance Cable Installation, per Fiber | | | CLO | PE1ED | | 7.79 | | | | | | | | | |
| **VIRTUAL COLLOCATION** | | | | | | | | | | | | | | | | | |
| | **Application** | | | | | | | | | | | | | | | | |
| | | Virtual Collocation - Application Fee | | | AMTFS | EAF | | 1,195.00 | | | | | | | | | |
| | | Virtual Collocation - Co-Carrier Cross Connects/Direct Connect, Application Fee, per application | | | AMTFS | VE1CA | | 317.20 | | | | | | | | | |
| | | Virtual Collocation Administrative Only - Application Fee | | | AMTFS | VE1AF | | 741.44 | | | | | | | | | |
| | **Space Preparation** | | | | | | | | | | | | | | | | |
| | | Virtual Collocation - Floor Space, per sq. ft. | I | | AMTFS | ESPVX | 2.69 | | | | | | | | | | |
| | **Power** | | | | | | | | | | | | | | | | |
| | | Virtual Collocation - Power, per fused amp | I | | AMTFS | ESPAX | 7.65 | | | | | | | | | | |
| | **Cross Connects (Cross Connects, Co-Carrier Cross Connects, and Ports)** | | | | | | | | | | | | | | | | |
| | | Virtual Collocation - 2-wire cross-connect, loop, provisioning | | | UEANL, UEA, UDN, UAL, UHL, UCL, UEQ, UNCVX, UNCDX, UNCNX | UEAC2 | 0.0225 | 19.77 | 14.95 | | | | | | | | |
| | | Virtual Collocation - 4-wire cross-connect, loop, provisioning | | | UEA, UHL, UCL, UDL, UNCVX, UNCDX | UEAC4 | 0.0449 | 19.95 | 15.05 | | | | | | | | |
| | | Virtual collocation - Special Access & UNE, cross-connect per DS1 | | | ULR, UXTD1, UNC1X, ULDD1, U1TD1, USLEL, UNLD1, USL, UEPEX, UEPDX | CNC1X | 0.4195 | 39.15 | 23.20 | | | | | | | | |
| | | Virtual collocation - Special Access & UNE, cross-connect per DS3 | | | USL, UE3, U1TD3, UXTS1, UXTD3, UNC3X, UNCSX, ULDD3, U1TS1, ULDS1, UDLSX, UNLD3 | CND3X | 4.41 | 38.25 | 21.94 | | | | | | | | |

| COLLOCATION - North Carolina | | | | | | | | | | | | | | Attachment: 4 Exh B | | | |
|---|---|---|---|---|---|---|---|---|---|---|---|---|---|---|---|---|---|
| CATEGORY | | RATE ELEMENTS | Interim | Zone | BCS | USOC | RATES($) | | | | | Svc Order Submitted Elec per LSR | Svc Order Submitted Manually per LSR | Incremental Charge - Manual Svc Order vs. Electronic-1st | Incremental Charge - Manual Svc Order vs. Electronic-Add'l | Incremental Charge - Manual Svc Order vs. Electronic-Disc 1st | Incremental Charge - Manual Svc Order vs. Electronic-Disc Add'l |
| | | | | | | | Rec | Nonrecurring | | Nonrecurring Disconnect | | OSS Rates($) | | | | | |
| | | | | | | | | First | Add'l | First | Add'l | SOMEC | SOMAN | SOMAN | SOMAN | SOMAN | SOMAN |
| | | Virtual Collocation - 2-Fiber Cross Connects | | | UDL12, UDLO3, U1T48, U1T12, U1TO3, ULDO3, ULD12, ULD48, UDF | CNC2F | 1.96 | 38.25 | 21.94 | | | | | | | | |
| | | Virtual Collocation - 4-Fiber Cross Connects | | | UDL12, UDLO3, U1T48, U1T12, U1TO3, ULDO3, ULD12, ULD48, UDF | CNC4F | 3.93 | 43.96 | 26.17 | | | | | | | | |
| | | Virtual Collocation - Co-Carrier Cross Connects/Direct Connect - Fiber Cable Support Structure, per linear foot, per cable | | | AMTFS | VE1CB | 0.0028 | | | | | | | | | | |
| | | Virtual Collocation - Co-Carrier Cross Connects/Direct Connect - Copper/Coax Cable Support Structure, per linear foot, per cable | | | AMTFS | VE1CD | 0.0041 | | | | | | | | | | |
| | | Virtual Collocation 2-Wire Cross Connect, Port | | | UEPSX, UEPSB, UEPSE, UEPSP, UEPSR, UEP2C | VE1R2 | 0.0225 | 19.77 | 14.95 | | | | | | | | |
| | | Virtual Collocation 4-Wire Cross Connect, Port | | | UEPDD, UEPEX | VE1R4 | 0.0449 | 19.95 | 15.05 | | | | | | | | |
| | **CFA** | | | | | | | | | | | | | | | | |
| | | Virtual Collocation - CFA Information Resend Request, per Premises, per Arrangement, per request | | | AMTFS | VE1QR | | 77.48 | | | | | | | | | |
| | **Cable Records - Note: The rates in the First & Additional columns will actually be billed as "Initial I" & "Subsequent S" respectively** | | | | | | | | | | | | | | | | |
| | | Virtual Collocation Cable Records - per request | | | AMTFS | VE1BA | | 1,458.00 | 937.29 | 245.00 | 245.00 | | | | | | |
| | | Virtual Collocation Cable Records - VG/DS0 Cable, per cable record | | | AMTFS | VE1BB | | 622.69 | 622.69 | 346.35 | 346.35 | | | | | | |
| | | Virtual Collocation Cable Records - VG/DS0 Cable, per each 100 pair | | | AMTFS | VE1BC | | 8.77 | 8.77 | 10.32 | 10.32 | | | | | | |
| | | Virtual Collocation Cable Records - DS1, per T1TIE | | | AMTFS | VE1BD | | 4.35 | 4.35 | 5.11 | 5.11 | | | | | | |
| | | Virtual Collocation Cable Records - DS3, per T3TIE | | | AMTFS | VE1BE | | 15.22 | 15.22 | 17.90 | 17.90 | | | | | | |
| | | Virtual Collocation Cable Records - Fiber Cable, per 99 fiber records | | | AMTFS | VE1BF | | 163.61 | 163.61 | 143.32 | 143.32 | | | | | | |
| | | Virtual Collocation Cable Records - CAT 5/RJ45 | | | AMTFS | VE1B5 | | 4.35 | 4.35 | 5.11 | 5.11 | | | | | | |
| | **Security** | | | | | | | | | | | | | | | | |
| | | Virtual collocation - Security escort, basic time, normally scheduled work hours | | | AMTFS | SPTBX | | 33.68 | 21.34 | | | | | | | | |
| | | Virtual collocation - Security escort, overtime, outside of normally scheduled work hours on a normal working day | | | AMTFS | SPTOX | | 43.87 | 27.57 | | | | | | | | |
| | | Virtual collocation - Security escort, premium time, outside of a scheduled work day | | | AMTFS | SPTPX | | 54.06 | 33.80 | | | | | | | | |
| | **Maintenance** | | | | | | | | | | | | | | | | |
| | | Virtual collocation - Maintenance in CO - Basic, per half hour | | | AMTFS | CTRLX | | 52.03 | 21.22 | | | | | | | | |
| | | Virtual collocation - Maintenance in CO - Overtime, per half hour | | | AMTFS | SPTOM | | 69.48 | 27.81 | | | | | | | | |
| | | Virtual collocation - Maintenance in CO - Premium per half hour | | | AMTFS | SPTPM | | 86.94 | 34.40 | | | | | | | | |
| | **Entrance Cable** | | | | | | | | | | | | | | | | |
| | | Virtual Collocation - Cable Installation Charge, per cable | | | AMTFS | ESPCX | | 1,233.00 | | | | | | | | | |
| | | Virtual Collocation - Cable Support Structure, per cable | | | AMTFS | ESPSX | 13.28 | | | | | | | | | | |
| **COLLOCATION IN THE REMOTE SITE** | | | | | | | | | | | | | | | | | |
| | **Physical Remote Site Collocation** | | | | | | | | | | | | | | | | |
| | | Physical Collocation in the Remote Site - Application Fee | | | CLORS | PE1RA | | 589.38 | | 258.38 | | | | | | | |
| | | Cabinet Space in the Remote Site per Bay/ Rack | | | CLORS | PE1RB | 218.07 | | | | | | | | | | |
| | | Physical Collocation in the Remote Site - Security Access - Key | | | CLORS | PE1RD | | 15.00 | | | | | | | | | |
| | | Physical Collocation in the Remote Site - Space Availability Report per Premises Requested | | | CLORS | PE1SR | | 215.55 | | | | | | | | | |

| COLLOCATION - North Carolina | | | | | | | | | | | | | | Attachment: 4 Exh B | | | |
|---|---|---|---|---|---|---|---|---|---|---|---|---|---|---|---|---|---|
| CATEGORY | RATE ELEMENTS | Interim | Zone | BCS | USOC | RATES($) | | | | | Svc Order Submitted Elec per LSR | Svc Order Submitted Manually per LSR | Incremental Charge - Manual Svc Order vs. Electronic-1st | Incremental Charge - Manual Svc Order vs. Electronic-Add'l | Incremental Charge - Manual Svc Order vs. Electronic-Disc 1st | Incremental Charge - Manual Svc Order vs. Electronic-Disc Add'l |
| | | | | | | Rec | Nonrecurring | | Nonrecurring Disconnect | | OSS Rates($) | | | | | |
| | | | | | | | First | Add'l | First | Add'l | SOMEC | SOMAN | SOMAN | SOMAN | SOMAN | SOMAN |
| | Physical Collocation in the Remote Site - Remote Site CLLI Code Request, per CLLI Code Requested | | | CLORS | PE1RE | | 70.65 | | | | | | | | | |
| | Remote Site DLEC Data (BRSDD), per Compact Disk, per CO | | | CLORS | PE1RR | | 232.94 | | | | | | | | | |
| | Physical Collocation - Security Escort for Basic Time - normally scheduled work, per half hour | | | CLORS | PE1BT | | 33.68 | 21.34 | | | | | | | | |
| | Physical Collocation - Security Escort for Overtime - outside of normally scheduled working hours on a scheduled work day, per half hour | | | CLORS | PE1OT | | 43.87 | 27.57 | | | | | | | | |
| | Physical Collocation - Security Escort for Premium Time - outside of scheduled work day, per half hour | | | CLORS | PE1PT | | 54.06 | 33.80 | | | | | | | | |
| **Adjacent Remote Site Collocation** | | | | | | | | | | | | | | | | |
| | Remote Site-Adjacent Collocation-Application Fee | | | CLORS | PE1RU | | 755.62 | 755.62 | | | | | | | | |
| | Remote Site-Adjacent Collocation - Real Estate, per square foot | | | CLORS | PE1RT | 0.134 | | | | | | | | | | |
| | Remote Site-Adjacent Collocation - AC Power, per breaker amp | | | CLORS | PE1RS | 6.27 | | | | | | | | | | |
| **NOTE: If Security Escort and/or Add'l Engineering Fees become necessary for adjacent remote site collocation, the Parties will negotiate appropriate rates.** | | | | | | | | | | | | | | | | |
| **Virtual Remote Site Collocation** | | | | | | | | | | | | | | | | |
| | Virtual Collocation in the Remote Site - Application Fee | | | VE1RS | VE1RB | | 589.38 | | 258.38 | | | | | | | |
| | Virtual Collocation in the Remote Site - Per Bay/Rack of Space | | | VE1RS | VE1RC | 218.07 | | | | | | | | | | |
| | Virtual Collocation in the Remote Site - Space Availability Report per Premises requested | | | VE1RS | VE1RR | | 215.55 | | | | | | | | | |
| | Virtual Collocation in the Remote Site - Remote Site CLLI Code Request, per CLLI Code Requested | | | VE1RS | VE1RL | | 70.65 | | | | | | | | | |
| **ADJACENT COLLOCATION** | | | | | | | | | | | | | | | | |
| | Adjacent Collocation - Space Charge per Sq. Ft. | | | CLOAC | PE1JA | 0.1555 | | | | | | | | | | |
| | Adjacent Collocation - Electrical Facility Charge per Linear Ft. | | | CLOAC | PE1JC | 5.78 | | | | | | | | | | |
| | Adjacent Collocation - 2-Wire Cross-Connects | | | UEANL,UEQ,UEA,UCL, UAL, UHL, UDN | PE1JE | 0.0239 | 19.77 | 14.95 | | | | | | | | |
| | Adjacent Collocation - 4-Wire Cross-Connects | | | UEA,UHL,UDL,UCL | PE1JF | 0.0477 | 19.95 | 15.05 | | | | | | | | |
| | Adjacent Collocation - DS1 Cross-Connects | | | USL | PE1JG | 1.28 | 39.15 | 23.20 | | | | | | | | |
| | Adjacent Collocation - DS3 Cross-Connects | | | UE3 | PE1JH | 17.35 | 38.25 | 21.94 | | | | | | | | |
| | Adjacent Collocation - 2-Fiber Cross-Connect | | | CLOAC | PE1JJ | 2.94 | 38.25 | 21.94 | | | | | | | | |
| | Adjacent Collocation - 4-Fiber Cross-Connect | | | CLOAC | PE1JK | 5.62 | 43.96 | 26.17 | | | | | | | | |
| | Adjacent Collocation - Application Fee | | | CLOAC | PE1JB | | 2,266.00 | | 0.5842 | | | | | | | |
| | Adjacent Collocation - 120V, Single Phase Standby Power Rate per AC Breaker Amp | | | CLOAC | PE1JL | 5.50 | | | | | | | | | | |
| | Adjacent Collocation - 240V, Single Phase Standby Power Rate per AC Breaker Amp | | | CLOAC | PE1JM | 11.01 | | | | | | | | | | |
| | Adjacent Collocation - 120V, Three Phase Standby Power Rate per AC Breaker Amp | | | CLOAC | PE1JN | 16.51 | | | | | | | | | | |
| | Adjacent Collocation - 277V, Three Phase Standby Power Rate per AC Breaker Amp | | | CLOAC | PE1JO | 38.12 | | | | | | | | | | |
| **Note: Rates displaying an "I" in Interim column are interim as a result of a Commission order.** | | | | | | | | | | | | | | | | |

| COLLOCATION - South Carolina | | | | | | | | | | | | | | Attachment: 4 Exh B | | | |
|---|---|---|---|---|---|---|---|---|---|---|---|---|---|---|---|---|---|
| CATEGORY | RATE ELEMENTS | Interim | Zone | BCS | USOC | RATES($) | | | | | Svc Order Submitted Elec per LSR | Svc Order Submitted Manually per LSR | Incremental Charge - Manual Svc Order vs. Electronic-1st | Incremental Charge - Manual Svc Order vs. Electronic-Add'l | Incremental Charge - Manual Svc Order vs. Electronic-Disc 1st | Incremental Charge - Manual Svc Order vs. Electronic-Disc Add'l |
| | | | | | | Rec | Nonrecurring | | Nonrecurring Disconnect | | OSS Rates($) | | | | | |
| | | | | | | | First | Add'l | First | Add'l | SOMEC | SOMAN | SOMAN | SOMAN | SOMAN | SOMAN |
| **PHYSICAL COLLOCATION** | | | | | | | | | | | | | | | | |
| **Application** | | | | | | | | | | | | | | | | |
| | Physical Collocation - Initial Application Fee | | | CLO | PE1BA | | 1,883.67 | | 0.51 | | | | | | | |
| | Physical Collocation - Subsequent Application Fee | | | CLO | PE1CA | | 1,570.10 | | 0.51 | | | | | | | |
| | Physical Collocation - Co-Carrier Cross Connects/Direct Connect, Application Fee, per application | | | CLO | PE1DT | | 584.42 | | | | | | | | | |
| | Physical Collocation Administrative Only - Application Fee | | | CLO | PE1BL | | 743.66 | | | | | | | | | |
| | Physical Collocation - Application Cost, Simple Augment | | | CLO | PE1KS | | 594.27 | | 1.21 | | | | | | | |
| | Physical Collocation - Application Cost, Minor Augment | | | CLO | PE1KM | | 833.26 | | 1.21 | | | | | | | |
| | Physical Collocation - Application Cost, Intermediate Augment | | | CLO | PE1K1 | | 1,058.00 | | 1.21 | | | | | | | |
| | Physical Collocation - Application Cost - Major Augment | | | CLO | PE1KJ | | 2,409.00 | | 1.21 | | | | | | | |
| **Space Preparation** | | | | | | | | | | | | | | | | |
| | Physical Collocation - Floor Space, per sq feet | | | CLO | PE1PJ | 3.95 | | | | | | | | | | |
| | Physical Collocation - Space Enclosure, welded wire, first 50 square feet | | | CLO | PE1BX | 197.69 | | | | | | | | | | |
| | Physical Collocation - Space enclosure, welded wire, first 100 square feet | | | CLO | PE1BW | 219.19 | | | | | | | | | | |
| | Physical Collocation - Space enclosure, welded wire, each additional 50 square feet | | | CLO | PE1CW | 21.50 | | | | | | | | | | |
| | Physical Collocation - Space Preparation - C.O. Modification per square ft. | | | CLO | PE1SK | 2.75 | | | | | | | | | | |
| | Physical Collocation - Space Preparation, Common Systems Modifications-Cageless, per square foot | | | CLO | PE1SL | 3.24 | | | | | | | | | | |
| | Physical Collocation - Space Preparation - Common Systems Modifications-Caged, per cage | | | CLO | PE1SM | 110.16 | | | | | | | | | | |
| | Physical Collocation - Space Preparation - Firm Order Processing | | | CLO | PE1SJ | | 602.05 | | | | | | | | | |
| | Physical Collocation - Space Availability Report, per Central Office Requested | | | CLO | PE1SR | | 1,077.57 | | | | | | | | | |
| **Power** | | | | | | | | | | | | | | | | |
| | Physical Collocation - Power, -48V DC Power - per Fused Amp Requested | | | CLO | PE1PL | 9.19 | | | | | | | | | | |
| | Physical Collocation - Power, 120V AC Power, Single Phase, per Breaker Amp | | | CLO | PE1FB | 5.67 | | | | | | | | | | |
| | Physical Collocation - Power, 240V AC Power, Single Phase, per Breaker Amp | | | CLO | PE1FD | 11.36 | | | | | | | | | | |
| | Physical Collocation - Power, 120V AC Power, Three Phase, per Breaker Amp | | | CLO | PE1FE | 17.03 | | | | | | | | | | |
| | Physical Collocation - Power, 277V AC Power, Three Phase, per Breaker Amp | | | CLO | PE1FG | 39.33 | | | | | | | | | | |
| **Cross Connects (Cross Connects, Co-Carrier Cross Connects, and Ports)** | | | | | | | | | | | | | | | | |
| | Physical Collocation - 2-wire cross-connect, loop, provisioning | | | UEANL,UEQ, UNCNX, UEA, UCL, UAL, UHL, UDN, UNCVX | PE1P2 | 0.0341 | 12.32 | 11.83 | 6.04 | 5.45 | | | | | | |
| | Physical Collocation - 4-wire cross-connect, loop, provisioning | | | UEA, UHL, UNCVX, UNCDX, UCL, UDL | PE1P4 | 0.0682 | 12.42 | 11.90 | 6.40 | 5.74 | | | | | | |
| | Physical Collocation -DS1 Cross-Connect for Physical Collocation, provisioning | | | WDS1L, WDS1S, UXTD1, ULDD1, USLEL, UNLD1, U1TD1, UNC1X, UEPSR, UEPSB, UEPSE, UEPSP, USL, UEPEX, UEPDX | PE1P1 | 1.12 | 22.08 | 15.96 | 6.42 | 5.80 | | | | | | |

| COLLOCATION - South Carolina | | | | | | | | | | | | | | Attachment: 4 Exh B | | | |
|---|---|---|---|---|---|---|---|---|---|---|---|---|---|---|---|---|---|
| CATEGORY | RATE ELEMENTS | Interim | Zone | BCS | USOC | RATES($) | | | | | Svc Order Submitted Elec per LSR | Svc Order Submitted Manually per LSR | Incremental Charge - Manual Svc Order vs. Electronic-1st | Incremental Charge - Manual Svc Order vs. Electronic-Add'l | Incremental Charge - Manual Svc Order vs. Electronic-Disc 1st | Incremental Charge - Manual Svc Order vs. Electronic-Disc Add'l |
| | | | | | | Rec | Nonrecurring | | Nonrecurring Disconnect | | OSS Rates($) | | | | | |
| | | | | | | | First | Add'l | First | Add'l | SOMEC | SOMAN | SOMAN | SOMAN | SOMAN | SOMAN |
| | Physical Collocation - DS3 Cross-Connect, provisioning | | | UE3, U1TD3, UXTD3, UXTS1, UNC3X, UNCSX, ULDD3, U1TS1, ULDS1, UNLD3, UEPEX, UEPDX, UEPSR, UEPSB, UEPSE, UEPSP | PE1P3 | 14.21 | 20.94 | 15.23 | 7.39 | 5.93 | | | | | | |
| | Physical Collocation - 2-Fiber Cross-Connect | | | CLO, ULDO3, ULD12, ULD48, U1TO3, U1T12, U1T48, UDLO3, UDL12, UDF | PE1F2 | 2.82 | 20.94 | 15.23 | 7.40 | 5.93 | | | | | | |
| | Physical Collocation - 4-Fiber Cross-Connect | | | ULDO3, ULD12, ULD48, U1TO3, U1T12, U1T48, UDLO3, UDL12, UDF, UDFCX | PE1F4 | 5.01 | 25.61 | 19.90 | 9.73 | 8.26 | | | | | | |
| | Physical Collocation - Co-Carrier Cross Connects/Direct Connect - Fiber Cable Support Structure, per linear foot, per cable. | | | CLO | PE1ES | 0.001 | | | | | | | | | | |
| | Physical Collocation - Co-Carrier Cross Connect/Direct Connect - Copper/Coax Cable Support Structure, per linear foot, per cable. | | | CLO | PE1DS | 0.0015 | | | | | | | | | | |
| | Physical Collocation 2-Wire Cross Connect, Port | | | UEPSR, UEPSP, UEPSE, UEPSB, UEPSX, UEP2C | PE1R2 | 0.0341 | 12.32 | 11.83 | 6.04 | 5.45 | | 15.69 | | | | |
| | Physical Collocation 4-Wire Cross Connect, Port | | | UEPEX, UEPDD | PE1R4 | 0.0682 | 12.42 | 11.90 | 6.40 | 5.74 | | 15.69 | | | | |
| **Security** | | | | | | | | | | | | | | | | |
| | Physical Collocation - Security Escort for Basic Time - normally scheduled work, per half hour | | | CLO | PE1BT | | 16.96 | 10.75 | | | | | | | | |
| | Physical Collocation - Security Escort for Overtime - outside of normally scheduled working hours on a scheduled work day, per half hour | | | CLO | PE1OT | | 22.10 | 13.89 | | | | | | | | |
| | Physical Collocation - Security Escort for Premium Time - outside of scheduled work day, per half hour | | | CLO | PE1PT | | 27.23 | 17.02 | | | | | | | | |
| | Physical Collocation - Security Access System, Security System, per Central Office | | | CLO | PE1AX | 74.72 | | | | | | | | | | |
| | Physical Collocation -Security Access System - New Card Activation, per Card Activation (First), per State | | | CLO | PE1A1 | 0.0601 | 27.85 | | | | | | | | | |
| | Physical Collocation-Security Access System-Administrative Change, existing Access Card, per Request, per State, per Card | | | CLO | PE1AA | | 7.81 | | | | | | | | | |
| | Physical Collocation - Security Access System - Replace Lost or Stolen Card, per Card | | | CLO | PE1AR | | 22.83 | | | | | | | | | |
| | Physical Collocation - Security Access - Initial Key, per Key | | | CLO | PE1AK | | 13.13 | | | | | | | | | |
| | Physical Collocation - Security Access - Key, Replace Lost or Stolen Key, per Key | | | CLO | PE1AL | | 13.13 | | | | | | | | | |
| **CFA** | | | | | | | | | | | | | | | | |
| | Physical Collocation - CFA Information Resend Request, per premises, per arrangement, per request | | | CLO | PE1C9 | | 77.71 | | | | | | | | | |
| **Cable Records - Note: The rates in the First & Additional columns will actually be billed as "Initial I" and "Subsequent S" respectively** | | | | | | | | | | | | | | | | |
| | Physical Collocation - Cable Records, per request | | | CLO | PE1CR | | I 760.98 | S 489.2 | 133.29 | | | | | | | |
| | Physical Collocation, Cable Records, VG/DS0 Cable, per cable record (maximum 3600 records) | | | CLO | PE1CD | | 327.65 | | 189.54 | | | | | | | |
| | Physical Collocation, Cable Records, VG/DS0 Cable, per each 100 pair | | | CLO | PE1CO | | 4.82 | | 5.91 | | | | | | | |
| | Physical Collocation, Cable Records, DS1, per T1 TIE | | | CLO | PE1C1 | | 2.26 | | 2.77 | | | | | | | |
| | Physical Collocation, Cable Records, DS3, per T3 TIE | | | CLO | PE1C3 | | 7.90 | | 9.68 | | | | | | | |

| COLLOCATION - South Carolina | | | | | | | | | | | | | | Attachment: 4 Exh B | | | |
|---|---|---|---|---|---|---|---|---|---|---|---|---|---|---|---|---|---|
| CATEGORY | RATE ELEMENTS | Interim | Zone | BCS | USOC | RATES($) | | | | | Svc Order Submitted Elec per LSR | Svc Order Submitted Manually per LSR | Incremental Charge - Manual Svc Order vs. Electronic-1st | Incremental Charge - Manual Svc Order vs. Electronic-Add'l | Incremental Charge - Manual Svc Order vs. Electronic-Disc 1st | Incremental Charge - Manual Svc Order vs. Electronic-Disc Add'l |
| | | | | | | Rec | Nonrecurring | | Nonrecurring Disconnect | | OSS Rates($) | | | | | |
| | | | | | | | First | Add'l | First | Add'l | SOMEC | SOMAN | SOMAN | SOMAN | SOMAN | SOMAN |
| | Physical Collocation - Cable Records, Fiber Cable, per cable record (maximum 99 records) | | | CLO | PE1CB | | 84.68 | | 77.30 | | | | | | | |
| | Physical Collocation, Cable Records,CAT5/RJ45 | | | CLO | PE1C5 | | 2.26 | | 2.77 | | | | | | | |
| **Virtual to Physical** | | | | | | | | | | | | | | | | |
| | Physical Collocation - Virtual to Physical Collocation Relocation, per Voice Grade Circuit | | | CLO | PE1BV | | 33.00 | | | | | | | | | |
| | Physical Collocation - Virtual to Physical Collocation Relocation, per DSO Circuit | | | CLO | PE1BO | | 33.00 | | | | | | | | | |
| | Physical Collocation - Virtual to Physical Collocation Relocation, per DS1 Circuit | | | CLO | PE1B1 | | 52.00 | | | | | | | | | |
| | Physical Collocation - Virtual to Physical Collocation Relocation, per DS3 Circuit | | | CLO | PE1B3 | | 52.00 | | | | | | | | | |
| | Physical Collocation - Virtual to Physical Collocation In-Place, Per Voice Grade Circuit | | | CLO | PE1BR | | 23.00 | | | | | | | | | |
| | Physical Collocation Virtual to Physical Collocation In-Place, Per DSO Circuit | | | CLO | PE1BP | | 23.00 | | | | | | | | | |
| | Physical Collocation - Virtual to Physical Collocation In-Place, Per DS1 Circuit | | | CLO | PE1BS | | 33.00 | | | | | | | | | |
| | Physical Collocation - Virtual to Physical Collocation In-Place, per DS3 Circuit | | | CLO | PE1BE | | 37.00 | | | | | | | | | |
| **Entrance Cable** | | | | | | | | | | | | | | | | |
| | Physical Collocation - Fiber Cable Installation, Pricing, non-recurring charge, per Entrance Cable | | | CLO | PE1BD | | 794.22 | | 22.54 | | | | | | | |
| | Physical Collocation - Fiber Cable Support Structure, per Entrance Cable | | | CLO | PE1PM | 21.33 | | | | | | | | | | |
| | Physical Collocation - Fiber Entrance Cable Installation, per Fiber | | | CLO | PE1ED | | 3.87 | | | | | | | | | |
| **VIRTUAL COLLOCATION** | | | | | | | | | | | | | | | | |
| **Application** | | | | | | | | | | | | | | | | |
| | Virtual Collocation - Application Fee | | | AMTFS | EAF | | 1,207.95 | | 0.51 | | | | | | | |
| | Virtual Collocation - Co-Carrier Cross Connects/Direct Connect, Application Fee, per application | | | AMTFS | VE1CA | | 584.42 | | | | | | | | | |
| | Virtual Collocation Administrative Only - Application Fee | | | AMTFS | VE1AF | | 743.66 | | | | | | | | | |
| **Space Preparation** | | | | | | | | | | | | | | | | |
| | Virtual Collocation - Floor Space, per sq. ft. | | | AMTFS | ESPVX | 3.95 | | | | | | | | | | |
| **Power** | | | | | | | | | | | | | | | | |
| | Virtual Collocation - Power, per fused amp | | | AMTFS | ESPAX | 9.19 | | | | | | | | | | |
| **Cross Connects (Cross Connects, Co-Carrier Cross Connects, and Ports)** | | | | | | | | | | | | | | | | |
| | Virtual Collocation - 2-wire cross-connect, loop, provisioning | | | UEANL, UEA, UDN, UAL, UHL, UCL, UEQ, UNCVX, UNCDX, UNCNX | UEAC2 | 0.0317 | 12.32 | 11.83 | 6.04 | 5.45 | | | | | | |
| | Virtual Collocation - 4-wire cross-connect, loop, provisioning | | | UEA, UHL, UCL, UDL, UNCVX, UNCDX | UEAC4 | 0.0634 | 12.42 | 11.90 | 6.40 | 5.74 | | | | | | |
| | Virtual collocation - Special Access & UNE,cross-connect per DS1 | | | ULR, UXTD1, UNC1X, ULDD1, U1TD1, USLEL, UNLD1, USL, UEPEX, UEPDX | CNC1X | 1.12 | 22.08 | 15.96 | 6.42 | 5.80 | | | | | | |
| | Virtual collocation - Special Access & UNE, cross-connect per DS3 | | | USL, UE3, U1TD3, UXTS1, UXTD3, UNC3X, UNCSX, ULDD3, U1TS1, ULDS1, UDLSX, UNLD3 | CND3X | 14.21 | 20.94 | 15.23 | 7.39 | 5.93 | | | | | | |

| COLLOCATION - South Carolina | | | | | | | | | | | | | | Attachment: 4 Exh B | | | |
|---|---|---|---|---|---|---|---|---|---|---|---|---|---|---|---|---|---|
| CATEGORY | RATE ELEMENTS | Interim | Zone | BCS | USOC | RATES($) | | | | | Svc Order Submitted Elec per LSR | Svc Order Submitted Manually per LSR | Incremental Charge - Manual Svc Order vs. Electronic-1st | Incremental Charge - Manual Svc Order vs. Electronic-Add'l | Incremental Charge - Manual Svc Order vs. Electronic-Disc 1st | Incremental Charge - Manual Svc Order vs. Electronic-Disc Add'l |
| | | | | | | Rec | Nonrecurring | | Nonrecurring Disconnect | | OSS Rates($) | | | | | |
| | | | | | | | First | Add'l | First | Add'l | SOMEC | SOMAN | SOMAN | SOMAN | SOMAN | SOMAN |
| | Virtual Collocation - 2-Fiber Cross Connects | | | UDL12, UDLO3, U1T48, U1T12, U1TO3, ULDO3, ULD12, ULD48, UDF | CNC2F | 2.86 | 20.94 | 15.23 | 7.40 | 5.93 | | | | | | |
| | Virtual Collocation - 4-Fiber Cross Connects | | | UDL12, UDLO3, U1T48, U1T12, U1TO3, ULDO3, ULD12, ULD48, UDF | CNC4F | 5.71 | 25.61 | 19.90 | 9.73 | 8.26 | | | | | | |
| | Virtual Collocation - Co-Carrier Cross Connects/Direct Connect - Fiber Cable Support Structure, per linear foot, per cable | | | AMTFS | VE1CB | 0.001 | | | | | | | | | | |
| | Virtual Collocation - Co-Carrier Cross Connects/Direct Connect - Copper/Coax Cable Support Structure, per linear foot, per cable | | | AMTFS | VE1CD | 0.0015 | | | | | | | | | | |
| | Virtual Collocation 2-Wire Cross Connect, Port | | | UEPSX, UEPSB, UEPSE, UEPSP, UEPSR, UEP2C | VE1R2 | 0.0317 | 12.32 | 11.83 | 6.04 | 5.45 | | | | | | |
| | Virtual Collocation 4-Wire Cross Connect, Port | | | UEPDD, UEPEX | VE1R4 | 0.0634 | 12.42 | 11.90 | 6.40 | 5.74 | | | | | | |
| **CFA** | | | | | | | | | | | | | | | | |
| | Virtual Collocation - CFA Information Resend Request, per Premises, per Arrangement, per request | | | AMTFS | VE1QR | | 77.71 | | | | | | | | | |
| **Cable Records - Note: The rates in the First & Additional columns will actually be billed as "Initial I" & "Subsequent S" respectively** | | | | | | | | | | | | | | | | |
| | Virtual Collocation Cable Records - per request | | | AMTFS | VE1BA | | 760.98 | 489.20 | 133.29 | | | | | | | |
| | Virtual Collocation Cable Records - VG/DS0 Cable, per cable record | | | AMTFS | VE1BB | | 327.65 | | 189.54 | | | | | | | |
| | Virtual Collocation Cable Records - VG/DS0 Cable, per each 100 pair | | | AMTFS | VE1BC | | 4.82 | | 5.91 | | | | | | | |
| | Virtual Collocation Cable Records - DS1, per T1TIE | | | AMTFS | VE1BD | | 2.26 | | 2.77 | | | | | | | |
| | Virtual Collocation Cable Records - DS3, per T3TIE | | | AMTFS | VE1BE | | 7.90 | | 9.68 | | | | | | | |
| | Virtual Collocation Cable Records - Fiber Cable, per 99 fiber records | | | AMTFS | VE1BF | | 84.68 | | 77.30 | | | | | | | |
| | Virtual Collocation Cable Records - CAT 5/RJ45 | | | AMTFS | VE1B5 | | 2.26 | | 2.77 | | | | | | | |
| **Security** | | | | | | | | | | | | | | | | |
| | Virtual collocation - Security escort, basic time, normally scheduled work hours | | | AMTFS | SPTBX | | 16.96 | 10.75 | | | | | | | | |
| | Virtual collocation - Security escort, overtime, outside of normally scheduled work hours on a normal working day | | | AMTFS | SPTOX | | 22.10 | 13.89 | | | | | | | | |
| | Virtual collocation - Security escort, premium time, outside of a scheduled work day | | | AMTFS | SPTPX | | 27.23 | 17.02 | | | | | | | | |
| **Maintenance** | | | | | | | | | | | | | | | | |
| | Virtual collocation - Maintenance in CO - Basic, per half hour | | | AMTFS | CTRLX | | 27.99 | 10.75 | | | | | | | | |
| | Virtual collocation - Maintenance in CO - Overtime, per half hour | | | AMTFS | SPTOM | | 36.56 | 13.89 | | | | | | | | |
| | Virtual collocation - Maintenance in CO - Premium per half hour | | | AMTFS | SPTPM | | 45.12 | 17.02 | | | | | | | | |
| **Entrance Cable** | | | | | | | | | | | | | | | | |
| | Virtual Collocation - Cable Installation Charge, per cable | | | AMTFS | ESPCX | | 794.22 | | 22.54 | | | | | | | |
| | Virtual Collocation - Cable Support Structure, per cable | | | AMTFS | ESPSX | 18.66 | | | | | | | | | | |
| **COLLOCATION IN THE REMOTE SITE** | | | | | | | | | | | | | | | | |
| **Physical Remote Site Collocation** | | | | | | | | | | | | | | | | |
| | Physical Collocation in the Remote Site - Application Fee | | | CLORS | PE1RA | | 308.38 | | 168.60 | | | | | | | |
| | Cabinet Space in the Remote Site per Bay/ Rack | | | CLORS | PE1RB | 246.44 | | | | | | | | | | |
| | Physical Collocation in the Remote Site - Security Access - Key | | | CLORS | PE1RD | | 13.13 | | | | | | | | | |
| | Physical Collocation in the Remote Site - Space Availability Report per Premises Requested | | | CLORS | PE1SR | | 116.13 | | | | | | | | | |

| COLLOCATION - South Carolina | | | | | | | | | | | | | Attachment: 4 Exh B | | | |
|---|---|---|---|---|---|---|---|---|---|---|---|---|---|---|---|---|
| CATEGORY | RATE ELEMENTS | Interim | Zone | BCS | USOC | RATES($) | | | | | Svc Order Submitted Elec per LSR | Svc Order Submitted Manually per LSR | Incremental Charge - Manual Svc Order vs. Electronic-1st | Incremental Charge - Manual Svc Order vs. Electronic-Add'l | Incremental Charge - Manual Svc Order vs. Electronic-Disc 1st | Incremental Charge - Manual Svc Order vs. Electronic-Disc Add'l |
| | | | | | | Rec | Nonrecurring | | Nonrecurring Disconnect | | OSS Rates($) | | | | | |
| | | | | | | | First | Add'l | First | Add'l | SOMEC | SOMAN | SOMAN | SOMAN | SOMAN | SOMAN |
| | Physical Collocation in the Remote Site - Remote Site CLLI Code Request, per CLLI Code Requested | | | CLORS | PE1RE | | 37.64 | | | | | | | | | |
| | Remote Site DLEC Data (BRSDD), per Compact Disk, per CO | | | CLORS | PE1RR | | 234.50 | | | | | | | | | |
| | Physical Collocation - Security Escort for Basic Time - normally scheduled work, per half hour | | | CLORS | PE1BT | | 16.96 | 10.75 | | | | | | | | |
| | Physical Collocation - Security Escort for Overtime - outside of normally scheduled working hours on a scheduled work day, per half hour | | | CLORS | PE1OT | | 22.10 | 13.89 | | | | | | | | |
| | Physical Collocation - Security Escort for Premium Time - outside of scheduled work day, per half hour | | | CLORS | PE1PT | | 27.23 | 17.02 | | | | | | | | |
| | **Adjacent Remote Site Collocation** | | | | | | | | | | | | | | | |
| | Remote Site-Adjacent Collocation-Application Fee | | | CLORS | PE1RU | | 755.62 | 755.62 | | | | | | | | |
| | Remote Site-Adjacent Collocation - Real Estate, per square foot | | | CLORS | PE1RT | 0.134 | | | | | | | | | | |
| | Remote Site-Adjacent Collocation - AC Power, per breaker amp | | | CLORS | PE1RS | 6.27 | | | | | | | | | | |
| | **NOTE: If Security Escort and/or Add'l Engineering Fees become necessary for adjacent remote site collocation, the Parties will negotiate appropriate rates.** | | | | | | | | | | | | | | | |
| | **Virtual Remote Site Collocation** | | | | | | | | | | | | | | | |
| | Virtual Collocation in the Remote Site - Application Fee | | | VE1RS | VE1RB | | 616.76 | | 337.19 | | | | | | | |
| | Virtual Collocation in the Remote Site - Per Bay/Rack of Space | | | VE1RS | VE1RC | 246.44 | | | | | | | | | | |
| | Virtual Collocation in the Remote Site - Space Availability Report per Premises requested | | | VE1RS | VE1RR | | 232.25 | | | | | | | | | |
| | Virtual Collocation in the Remote Site - Remote Site CLLI Code Request, per CLLI Code Requested | | | VE1RS | VE1RL | | 75.27 | | | | | | | | | |
| **ADJACENT COLLOCATION** | | | | | | | | | | | | | | | | |
| | Adjacent Collocation - Space Charge per Sq. Ft. | | | CLOAC | PE1JA | 0.0939 | | | | | | | | | | |
| | Adjacent Collocation - Electrical Facility Charge per Linear Ft. | | | CLOAC | PE1JC | 6.40 | | | | | | | | | | |
| | Adjacent Collocation - 2-Wire Cross-Connects | | | UEANL,UEQ,UEA,UCL, UAL, UHL, UDN | PE1JE | 0.0264 | 12.32 | 11.83 | 6.04 | 5.45 | | | | | | |
| | Adjacent Collocation - 4-Wire Cross-Connects | | | UEA,UHL,UDL,UCL | PE1JF | 0.0527 | 12.42 | 11.90 | 6.40 | 5.74 | | | | | | |
| | Adjacent Collocation - DS1 Cross-Connects | | | USL | PE1JG | 1.03 | 22.08 | 15.96 | 6.42 | 5.80 | | | | | | |
| | Adjacent Collocation - DS3 Cross-Connects | | | UE3 | PE1JH | 14.00 | 20.94 | 15.23 | 7.39 | 5.93 | | | | | | |
| | Adjacent Collocation - 2-Fiber Cross-Connect | | | CLOAC | PE1JJ | 2.37 | 20.94 | 15.23 | 7.40 | 5.93 | | | | | | |
| | Adjacent Collocation - 4-Fiber Cross-Connect | | | CLOAC | PE1JK | 4.53 | 25.61 | 19.90 | 9.73 | 8.26 | | | | | | |
| | Adjacent Collocation - Application Fee | | | CLOAC | PE1JB | | 1,580.20 | | | | | | | | | |
| | Adjacent Collocation - 120V, Single Phase Standby Power Rate per AC Breaker Amp | | | CLOAC | PE1JL | 5.67 | | | | | | | | | | |
| | Adjacent Collocation - 240V, Single Phase Standby Power Rate per AC Breaker Amp | | | CLOAC | PE1JM | 11.36 | | | | | | | | | | |
| | Adjacent Collocation - 120V, Three Phase Standby Power Rate per AC Breaker Amp | | | CLOAC | PE1JN | 17.03 | | | | | | | | | | |
| | Adjacent Collocation - 277V, Three Phase Standby Power Rate per AC Breaker Amp | | | CLOAC | PE1JO | 39.33 | | | | | | | | | | |
| | **Note: Rates displaying an "I" in Interim column are interim as a result of a Commission order.** | | | | | | | | | | | | | | | |

| COLLOCATION - Tennessee | | | | | | | | | | | | | | Attachment: 4 Exh B | | | |
|---|---|---|---|---|---|---|---|---|---|---|---|---|---|---|---|---|---|
| CATEGORY | | RATE ELEMENTS | Interim | Zone | BCS | USOC | RATES($) | | | | | Svc Order Submitted Elec per LSR | Svc Order Submitted Manually per LSR | Incremental Charge - Manual Svc Order vs. Electronic-1st | Incremental Charge - Manual Svc Order vs. Electronic-Add'l | Incremental Charge - Manual Svc Order vs. Electronic-Disc 1st | Incremental Charge - Manual Svc Order vs. Electronic-Disc Add'l |
| | | | | | | | Rec | Nonrecurring | | Nonrecurring Disconnect | | OSS Rates($) | | | | | |
| | | | | | | | | First | Add'l | First | Add'l | SOMEC | SOMAN | SOMAN | SOMAN | SOMAN | SOMAN |
| **PHYSICAL COLLOCATION** | | | | | | | | | | | | | | | | | |
| | **Application** | | | | | | | | | | | | | | | | |
| | | Physical Collocation - Initial Application Fee | | | CLO | PE1BA | | 1,285.98 | | | | | | | | | |
| | | Physical Collocation - Subsequent Application Fee | | | CLO | PE1CA | | 1,085.48 | | | | | | | | | |
| | | Physical Collocation - Co-Carrier Cross Connects/Direct Connect, Application Fee, per application | | | CLO | PE1DT | | 585.09 | | | | | | | | | |
| | | Physical Collocation - Power Reconfiguration Only, Application Fee | | | CLO | PE1PR | | 400.10 | | | | | | | | | |
| | | Physical Collocation Administrative Only - Application Fee | | | CLO | PE1BL | | 743.25 | | | | | | | | | |
| | **Space Preparation** | | | | | | | | | | | | | | | | |
| | | Physical Collocation - Floor Space, per sq feet | | | CLO | PE1PJ | 5.94 | | | | | | | | | | |
| | | Physical Collocation - Space Enclosure, welded wire, first 50 square feet | | | CLO | PE1BX | 197.09 | | | | | | | | | | |
| | | Physical Collocation - Space enclosure, welded wire, first 100 square feet | | | CLO | PE1BW | 218.53 | | | | | | | | | | |
| | | Physical Collocation - Space enclosure, welded wire, each additional 50 square feet | | | CLO | PE1CW | 21.44 | | | | | | | | | | |
| | | Physical Collocation - Space Preparation - C.O. Modification per square ft. | | | CLO | PE1SK | 2.74 | | | | | | | | | | |
| | | Physical Collocation - Space Preparation, Common Systems Modifications-Cageless, per square foot | | | CLO | PE1SL | 2.95 | | | | | | | | | | |
| | | Physical Collocation - Space Preparation - Common Systems Modifications-Caged, per cage | | | CLO | PE1SM | 100.14 | | | | | | | | | | |
| | | Physical Collocation - Space Preparation - Firm Order Processing | | | CLO | PE1SJ | | 1,204.00 | | | | | | | | | |
| | | Physical Collocation - Space Availability Report, per Central Office Requested | I | | CLO | PE1SR | | 2,027.00 | | | | | | | | | |
| | **Power** | | | | | | | | | | | | | | | | |
| | | Physical Collocation - Power, -48V DC Power - per Fused Amp Requested | | | CLO | PE1PL | 8.87 | | | | | | | | | | |
| | | Physical Collocation - Power, 120V AC Power, Single Phase, per Breaker Amp | | | CLO | PE1FB | 5.60 | | | | | | | | | | |
| | | Physical Collocation - Power, 240V AC Power, Single Phase, per Breaker Amp | | | CLO | PE1FD | 11.22 | | | | | | | | | | |
| | | Physical Collocation - Power, 120V AC Power, Three Phase, per Breaker Amp | | | CLO | PE1FE | 16.82 | | | | | | | | | | |
| | | Physical Collocation - Power, 277V AC Power, Three Phase, per Breaker Amp | | | CLO | PE1FG | 38.84 | | | | | | | | | | |
| | **Cross Connects (Cross Connects, Co-Carrier Cross Connects, and Ports)** | | | | | | | | | | | | | | | | |
| | | Physical Collocation - 2-wire cross-connect, loop, provisioning | | | UEANL,UEQ, UNCNX, UEA, UCL, UAL, UHL, UDN, UNCVX | PE1P2 | 0.033 | 33.82 | 31.92 | | | | | | | | |
| | | Physical Collocation - 4-wire cross-connect, loop, provisioning | | | UEA, UHL, UNCVX, UNCDX, UCL, UDL | PE1P4 | 0.066 | 33.94 | 31.95 | | | | | | | | |
| | | Physical Collocation -DS1 Cross-Connect for Physical Collocation, provisioning | | | WDS1L, WDS1S, UXTD1, ULDD1, USLEL, UNLD1, U1TD1, UNC1X, UEPSR, UEPSB, UEPSE, UEPSP, USL, UEPEX, UEPDX | PE1P1 | 1.51 | 53.27 | 40.16 | | | | | | | | |

| COLLOCATION - Tennessee | | | | | | | | | | | | | | Attachment: 4 Exh B | | | |
|---|---|---|---|---|---|---|---|---|---|---|---|---|---|---|---|---|---|
| CATEGORY | | RATE ELEMENTS | Interim | Zone | BCS | USOC | RATES($) | | | | | Svc Order Submitted Elec per LSR | Svc Order Submitted Manually per LSR | Incremental Charge - Manual Svc Order vs. Electronic-1st | Incremental Charge - Manual Svc Order vs. Electronic-Add'l | Incremental Charge - Manual Svc Order vs. Electronic-Disc 1st | Incremental Charge - Manual Svc Order vs. Electronic-Disc Add'l |
| | | | | | | | | Nonrecurring | | Nonrecurring Disconnect | | OSS Rates($) | | | | | |
| | | | | | | | Rec | First | Add'l | First | Add'l | SOMEC | SOMAN | SOMAN | SOMAN | SOMAN | SOMAN |
| | | Physical Collocation - DS3 Cross-Connect, provisioning | | | UE3, U1TD3, UXTD3, UXTS1, UNC3X, UNCSX, ULDD3, U1TS1, ULDS1, UNLD3, UEPEX, UEPDX, UEPSR, UEPSB, UEPSE, UEPSP | PE1P3 | 19.26 | 52.37 | 38.89 | | | | | | | | |
| | | Physical Collocation - 2-Fiber Cross-Connect | | | CLO, ULDO3, ULD12, ULD48, U1TO3, U1T12, U1T48, UDLO3, UDL12, UDF | PE1F2 | 15.64 | 41.56 | 29.82 | 12.96 | 10.34 | | | 2.69 | 2.69 | 1.56 | 1.56 |
| | | Physical Collocation - 4-Fiber Cross-Connect | | | ULDO3, ULD12, ULD48, U1TO3, U1T12, U1T48, UDLO3, UDL12, UDF, UDFCX | PE1F4 | 28.11 | 50.53 | 38.78 | 16.97 | 14.35 | | | 2.69 | 2.69 | 1.56 | 1.56 |
| | | Physical Collocation - Co-Carrier Cross Connects/Direct Connect - Fiber Cable Support Structure, per linear foot, per cable. | | | CLO | PE1ES | 0.0013 | | | | | | | | | | |
| | | Physical Collocation - Co-Carrier Cross Connect/Direct Connect - Copper/Coax Cable Support Structure, per linear foot, per cable. | | | CLO | PE1DS | 0.0019 | | | | | | | | | | |
| | | Physical Collocation 2-Wire Cross Connect, Port | | | UEPSR, UEPSP, UEPSE, UEPSB, UEPSX, UEP2C | PE1R2 | 0.033 | 33.82 | 31.92 | | | | | 20.35 | 10.54 | 13.32 | 1.40 |
| | | Physical Collocation 4-Wire Cross Connect, Port | | | UEPEX, UEPDD | PE1R4 | 0.066 | 33.94 | 31.95 | | | | | 20.35 | 10.54 | 13.32 | 1.40 |
| | **Security** | | | | | | | | | | | | | | | | |
| | | Physical Collocation - Security Escort for Basic Time - normally scheduled work, per half hour | | | CLO | PE1BT | | 33.91 | 21.49 | | | | | | | | |
| | | Physical Collocation - Security Escort for Overtime - outside of normally scheduled working hours on a scheduled work day, per half hour | | | CLO | PE1OT | | 44.17 | 27.76 | | | | | | | | |
| | | Physical Collocation - Security Escort for Premium Time - outside of scheduled work day, per half hour | | | CLO | PE1PT | | 54.42 | 34.02 | | | | | | | | |
| | | Physical Collocation - Security Access System - Security System per Central Office | | | CLO | PE1AX | 55.99 | | | | | | | | | | |
| | | Physical Collocation -Security Access System - New Card Activation, per Card Activation (First), per State | | | CLO | PE1A1 | 0.059 | 55.67 | | | | | | | | | |
| | | Physical Collocation-Security Access System-Administrative Change, existing Access Card, per Request, per State, per Card | | | CLO | PE1AA | | 15.61 | | | | | | | | | |
| | | Physical Collocation - Security Access System - Replace Lost or Stolen Card, per Card | | | CLO | PE1AR | | 45.64 | | | | | | | | | |
| | | Physical Collocation - Security Access - Initial Key, per Key | | | CLO | PE1AK | | 26.24 | | | | | | | | | |
| | | Physical Collocation - Security Access - Key, Replace Lost or Stolen Key, per Key | | | CLO | PE1AL | | 26.24 | | | | | | | | | |
| | **CFA** | | | | | | | | | | | | | | | | |
| | | Physical Collocation - CFA Information Resend Request, per premises, per arrangement, per request | | | CLO | PE1C9 | | 77.67 | | | | | | | | | |
| | **Cable Records** | | | | | | | | | | | | | | | | |
| | | Physical Collocation - Cable Records, per request | | | CLO | PE1CR | | 1,711.00 | | | | | | | | | |
| | | Physical Collocation, Cable Records, VG/DS0 Cable, per cable record (maximum 3600 records) | | | CLO | PE1CD | | 925.06 | | | | | | | | | |
| | | Physical Collocation, Cable Records, VG/DS0 Cable, per each 100 pair | | | CLO | PE1CO | | 18.05 | | | | | | | | | |
| | | Physical Collocation, Cable Records, DS1, per T1 TIE | | | CLO | PE1C1 | | 8.45 | | | | | | | | | |
| | | Physical Collocation, Cable Records, DS3, per T3 TIE | | | CLO | PE1C3 | | 29.57 | | | | | | | | | |

| COLLOCATION - Tennessee | | | | | | | | | | | | | | Attachment: 4 Exh B | | | |
|---|---|---|---|---|---|---|---|---|---|---|---|---|---|---|---|---|---|
| CATEGORY | | RATE ELEMENTS | Interim | Zone | BCS | USOC | RATES($) | | | | | Svc Order Submitted Elec per LSR | Svc Order Submitted Manually per LSR | Incremental Charge - Manual Svc Order vs. Electronic-1st | Incremental Charge - Manual Svc Order vs. Electronic-Add'l | Incremental Charge - Manual Svc Order vs. Electronic-Disc 1st | Incremental Charge - Manual Svc Order vs. Electronic-Disc Add'l |
| | | | | | | | Rec | Nonrecurring | | Nonrecurring Disconnect | | OSS Rates($) | | | | | |
| | | | | | | | | First | Add'l | First | Add'l | SOMEC | SOMAN | SOMAN | SOMAN | SOMAN | SOMAN |
| | | Physical Collocation - Cable Records, Fiber Cable, per cable record (maximum 99 records) | | | CLO | PE1CB | | 279.42 | | | | | | | | | |
| | | Physical Collocation, Cable Records,CAT5/RJ45 | | | CLO | PE1C5 | | 8.45 | | | | | | | | | |
| | **Virtual to Physical** | | | | | | | | | | | | | | | | |
| | | Physical Collocation - Virtual to Physical Collocation Relocation, per Voice Grade Circuit | | | CLO | PE1BV | | 33.00 | | | | | | | | | |
| | | Physical Collocation - Virtual to Physical Collocation Relocation, per DSO Circuit | | | CLO | PE1BO | | 33.00 | | | | | | | | | |
| | | Physical Collocation - Virtual to Physical Collocation Relocation, per DS1 Circuit | | | CLO | PE1B1 | | 52.00 | | | | | | | | | |
| | | Physical Collocation - Virtual to Physical Collocation Relocation, per DS3 Circuit | | | CLO | PE1B3 | | 52.00 | | | | | | | | | |
| | | Physical Collocation - Virtual to Physical Collocation In-Place, Per Voice Grade Circuit | | | CLO | PE1BR | | 23.00 | | | | | | | | | |
| | | Physical Collocation Virtual to Physical Collocation In-Place, Per DSO Circuit | | | CLO | PE1BP | | 23.00 | | | | | | | | | |
| | | Physical Collocation - Virtual to Physical Collocation In-Place, Per DS1 Circuit | | | CLO | PE1BS | | 33.00 | | | | | | | | | |
| | | Physical Collocation - Virtual to Physical Collocation In-Place, per DS3 Circuit | | | CLO | PE1BE | | 37.00 | | | | | | | | | |
| | **Entrance Cable** | | | | | | | | | | | | | | | | |
| | | Physical Collocation - Fiber Cable Support Structure, per Entrance Cable | | | CLO | PE1PM | 19.80 | | | | | | | | | | |
| | | Physical Collocation - Fiber Entrance Cable per Cable (CO manhole to vault splice) | | | CLO | PE1EC | | 1,071.00 | | 43.10 | | | | | | | |
| | | Physical Collocation - Fiber Entrance Cable Installation, per Fiber | | | CLO | PE1ED | | 7.29 | | | | | | | | | |
| **VIRTUAL COLLOCATION** | | | | | | | | | | | | | | | | | |
| | **Application** | | | | | | | | | | | | | | | | |
| | | Virtual Collocation - Application Fee | | | AMTFS | EAF | | 2,633.00 | | | | | | 2.07 | 2.81 | 0.67 | 1.41 |
| | | Virtual Collocation - Co-Carrier Cross Connects/Direct Connect, Application Fee, per application | | | AMTFS | VE1CA | | 585.09 | | | | | | | | | |
| | | Virtual Collocation Administrative Only - Application Fee | | | AMTFS | VE1AF | | 743.25 | | | | | | | | | |
| | **Space Preparation** | | | | | | | | | | | | | | | | |
| | | Virtual Collocation - Floor Space, per sq. ft. | | | AMTFS | ESPVX | 3.91 | | | | | | | | | | |
| | **Power** | | | | | | | | | | | | | | | | |
| | | Virtual Collocation - Power, per fused amp | | | AMTFS | ESPAX | 6.79 | | | | | | | | | | |
| | **Cross Connects (Cross Connects, Co-Carrier Cross Connects, and Ports)** | | | | | | | | | | | | | | | | |
| | | Virtual Collocation - 2-wire cross-connect, loop, provisioning | | | UEANL, UEA, UDN, UAL, UHL, UCL, UEQ, UNCVX, UNCDX, UNCNX | UEAC2 | 0.57 | 11.62 | 9.90 | 10.38 | 8.66 | | | 2.07 | 2.81 | 0.67 | 1.41 |
| | | Virtual Collocation - 4-wire cross-connect, loop, provisioning | | | UEA, UHL, UCL, UDL, UNCVX, UNCDX | UEAC4 | 0.57 | 11.81 | 10.04 | 10.44 | 8.67 | | | 2.07 | 2.81 | 0.67 | 1.41 |
| | | Virtual collocation - Special Access & UNE, cross-connect per DS1 | | | ULR, UXTD1, UNC1X, ULDD1, U1TD1, USLEL, UNLD1, USL, UEPEX, UEPDX | CNC1X | 1.32 | 32.22 | 17.76 | 10.46 | 8.75 | | | 2.07 | 2.81 | 0.67 | 1.41 |
| | | Virtual collocation - Special Acess & UNE, cross-connect per DS3 | | | USL, UE3, U1TD3, UXTS1, UXTD3, UNC3X, UNCSX, ULDD3, U1TS1, ULDS1, UDLSX, UNLD3 | CND3X | 12.32 | 29.97 | 16.30 | 12.03 | 8.99 | | | 2.07 | 2.81 | 0.67 | 1.41 |

| COLLOCATION - Tennessee | | | | | | | | | | | | | | Attachment: 4 Exh B | | | |
|---|---|---|---|---|---|---|---|---|---|---|---|---|---|---|---|---|---|
| CATEGORY | | RATE ELEMENTS | Interim | Zone | BCS | USOC | RATES($) | | | | | Svc Order Submitted Elec per LSR | Svc Order Submitted Manually per LSR | Incremental Charge - Manual Svc Order vs. Electronic-1st | Incremental Charge - Manual Svc Order vs. Electronic-Add'l | Incremental Charge - Manual Svc Order vs. Electronic-Disc 1st | Incremental Charge - Manual Svc Order vs. Electronic-Disc Add'l |
| | | | | | | | | Nonrecurring | | Nonrecurring Disconnect | | OSS Rates($) | | | | | |
| | | | | | | | Rec | First | Add'l | First | Add'l | SOMEC | SOMAN | SOMAN | SOMAN | SOMAN | SOMAN |
| | | Virtual Collocation - 2-Fiber Cross Connects | | | UDL12, UDLO3, U1T48, U1T12, U1TO3, ULDO3, ULD12, ULD48, UDF | CNC2F | 3.03 | 41.56 | 29.82 | 12.96 | 10.34 | | | 2.69 | 2.69 | 1.56 | 1.56 |
| | | Virtual Collocation - 4-Fiber Cross Connects | | | UDL12, UDLO3, U1T48, U1T12, U1TO3, ULDO3, ULD12, ULD48, UDF | CNC4F | 6.06 | 50.53 | 38.78 | 16.97 | 14.35 | | | 2.69 | 2.69 | 1.56 | 1.56 |
| | | Virtual Collocation - Co-Carrier Cross Connects/Direct Connect - Fiber Cable Support Structure, per linear foot, per cable | | | AMTFS | VE1CB | 0.0013 | | | | | | | | | | |
| | | Virtual Collocation - Co-Carrier Cross Connects/Direct Connect - Copper/Coax Cable Support Structure, per linear foot, per cable | | | AMTFS | VE1CD | 0.0019 | | | | | | | | | | |
| | | Virtual Collocation 2-Wire Cross Connect, Port | | | UEPSX, UEPSB, UEPSE, UEPSP, UEPSR, UEP2C | VE1R2 | 0.57 | 11.62 | 9.90 | 10.38 | 8.66 | | | 20.35 | 10.54 | 13.32 | 1.40 |
| | | Virtual Collocation 4-Wire Cross Connect, Port | | | UEPDD, UEPEX | VE1R4 | 0.57 | 11.81 | 10.04 | 10.44 | 8.67 | | | 20.35 | 10.54 | 13.32 | 1.40 |
| | **CFA** | | | | | | | | | | | | | | | | |
| | | Virtual Collocation - CFA Information Resend Request, per Premises, per Arrangement, per request | | | AMTFS | VE1QR | | 77.67 | | | | | | | | | |
| | **Cable Records** | | | | | | | | | | | | | | | | |
| | | Virtual Collocation Cable Records - per request | | | AMTFS | VE1BA | | 1,711.00 | | | | | | | | | |
| | | Virtual Collocation Cable Records - VG/DS0 Cable, per cable record | | | AMTFS | VE1BB | | 925.06 | | | | | | | | | |
| | | Virtual Collocation Cable Records - VG/DS0 Cable, per each 100 pair | | | AMTFS | VE1BC | | 18.05 | | | | | | | | | |
| | | Virtual Collocation Cable Records - DS1, per T1TIE | | | AMTFS | VE1BD | | 8.45 | | | | | | | | | |
| | | Virtual Collocation Cable Records - DS3, per T3TIE | | | AMTFS | VE1BE | | 29.57 | | | | | | | | | |
| | | Virtual Collocation Cable Records - Fiber Cable, per 99 fiber records | | | AMTFS | VE1BF | | 279.42 | | | | | | | | | |
| | | Virtual Collocation Cable Records - CAT 5/RJ45 | | | AMTFS | VE1B5 | | 8.45 | | | | | | | | | |
| | **Security** | | | | | | | | | | | | | | | | |
| | | Virtual collocation - Security escort, basic time, normally scheduled work hours | | | AMTFS | SPTBX | | 33.15 | 20.44 | | | | | 2.07 | 2.81 | 0.67 | 1.41 |
| | | Virtual collocation - Security escort, overtime, outside of normally scheduled work hours on a normal working day | | | AMTFS | SPTOX | | 41.50 | 25.61 | | | | | 2.07 | 2.81 | 0.67 | 1.41 |
| | | Virtual collocation - Security escort, premium time, outside of a scheduled work day | | | AMTFS | SPTPX | | 49.86 | 30.79 | | | | | 2.07 | 2.81 | 0.67 | 1.41 |
| | **Maintenance** | | | | | | | | | | | | | | | | |
| | | Virtual collocation - Maintenance in CO - Basic, per half hour | | | AMTFS | CTRLX | | 30.64 | | | | | | 2.07 | 2.81 | 0.67 | 1.41 |
| | | Virtual collocation - Maintenance in CO - Overtime, per half hour | | | AMTFS | SPTOM | | 35.77 | | | | | | 2.07 | 2.81 | 0.67 | 1.41 |
| | | Virtual collocation - Maintenance in CO - Premium per half hour | | | AMTFS | SPTPM | | 40.90 | | | | | | 2.07 | 2.81 | 0.67 | 1.41 |
| | **Entrance Cable** | | | | | | | | | | | | | | | | |
| | | Virtual Collocation - Cable Installation Charge, per cable | | | AMTFS | ESPCX | | 1,749.00 | | | | | | 2.07 | 2.81 | 0.67 | 1.41 |
| | | Virtual Collocation - Cable Support Structure, per cable | | | AMTFS | ESPSX | 17.87 | | | | | | | | | | |
| **COLLOCATION IN THE REMOTE SITE** | | | | | | | | | | | | | | | | | |
| | **Physical Remote Site Collocation** | | | | | | | | | | | | | | | | |
| | | Physical Collocation in the Remote Site - Application Fee | | | CLORS | PE1RA | | 580.20 | | 312.76 | | | | | | | |
| | | Cabinet Space in the Remote Site per Bay/ Rack | | | CLORS | PE1RB | 220.41 | | | | | | | | | | |
| | | Physical Collocation in the Remote Site - Security Access - Key | | | CLORS | PE1RD | | 24.69 | | | | | | | | | |
| | | Physical Collocation in the Remote Site - Space Availability Report per Premises Requested | | | CLORS | PE1SR | | 218.49 | | | | | | | | | |

| COLLOCATION - Tennessee | | | | | | | | | | | | | | Attachment: 4 Exh B | | | |
|---|---|---|---|---|---|---|---|---|---|---|---|---|---|---|---|---|---|
| CATEGORY | RATE ELEMENTS | Interim | Zone | BCS | USOC | RATES($) | | | | | Svc Order Submitted Elec per LSR | Svc Order Submitted Manually per LSR | Incremental Charge - Manual Svc Order vs. Electronic-1st | Incremental Charge - Manual Svc Order vs. Electronic-Add'l | Incremental Charge - Manual Svc Order vs. Electronic-Disc 1st | Incremental Charge - Manual Svc Order vs. Electronic-Disc Add'l |
| | | | | | | Rec | Nonrecurring | | Nonrecurring Disconnect | | OSS Rates($) | | | | | |
| | | | | | | | First | Add'l | First | Add'l | SOMEC | SOMAN | SOMAN | SOMAN | SOMAN | SOMAN |
| | Physical Collocation in the Remote Site - Remote Site CLLI Code Request, per CLLI Code Requested | | | CLORS | PE1RE | | 70.81 | | | | | | | | | |
| | Remote Site DLEC Data (BRSDD), per Compact Disk, per CO | | | CLORS | PE1RR | | 234.15 | | | | | | | | | |
| | Physical Collocation - Security Escort for Basic Time - normally scheduled work, per half hour | | | CLORS | PE1BT | | 33.91 | 21.49 | | | | | | | | |
| | Physical Collocation - Security Escort for Overtime - outside of normally scheduled working hours on a scheduled work day, per half hour | | | CLORS | PE1OT | | 44.17 | 27.76 | | | | | | | | |
| | Physical Collocation - Security Escort for Premium Time - outside of scheduled work day, per half hour | | | CLORS | PE1PT | | 54.42 | 34.02 | | | | | | | | |
| | **Adjacent Remote Site Collocation** | | | | | | | | | | | | | | | |
| | Remote Site-Adjacent Collocation-Application Fee | | | CLORS | PE1RU | | 755.62 | 755.62 | | | | | | | | |
| | Remote Site-Adjacent Collocation - Real Estate, per square foot | | | CLORS | PE1RT | 0.134 | | | | | | | | | | |
| | Remote Site-Adjacent Collocation - AC Power, per breaker amp | | | CLORS | PE1RS | 6.27 | | | | | | | | | | |
| | **NOTE: If Security Escort and/or Add'l Engineering Fees become necessary for adjacent remote site collocation, the Parties will negotiate appropriate rates.** | | | | | | | | | | | | | | | |
| | **Virtual Remote Site Collocation** | | | | | | | | | | | | | | | |
| | Virtual Collocation in the Remote Site - Application Fee | | | VE1RS | VE1RB | | 580.20 | | 312.76 | | | | | | | |
| | Virtual Collocation in the Remote Site - Per Bay/Rack of Space | | | VE1RS | VE1RC | 220.41 | | | | | | | | | | |
| | Virtual Collocation in the Remote Site - Space Availability Report per Premises requested | | | VE1RS | VE1RR | | 218.49 | | | | | | | | | |
| | Virtual Collocation in the Remote Site - Remote Site CLLI Code Request, per CLLI Code Requested | | | VE1RS | VE1RL | | 70.81 | | | | | | | | | |
| **ADJACENT COLLOCATION** | | | | | | | | | | | | | | | | |
| | Adjacent Collocation - Space Charge per Sq. Ft. | | | CLOAC | PE1JA | 0.0656 | | | | | | | | | | |
| | Adjacent Collocation - Electrical Facility Charge per Linear Ft. | | | CLOAC | PE1JC | 5.53 | | | | | | | | | | |
| | Adjacent Collocation - 2-Wire Cross-Connects | | | UEANL,UEQ,UEA,UCL, UAL, UHL, UDN | PE1JE | 0.34 | 11.12 | 10.18 | 11.33 | 10.23 | | | 1.77 | 1.77 | 1.12 | 1.12 |
| | Adjacent Collocation - 4-Wire Cross-Connects | | | UEA,UHL,UDL,UCL | PE1JF | 0.33 | 11.30 | 10.31 | 11.62 | 10.44 | | | 1.77 | 1.77 | 1.12 | 1.12 |
| | Adjacent Collocation - DS1 Cross-Connects | | | USL | PE1JG | 1.70 | 28.39 | 16.88 | 11.65 | 10.54 | | | 1.77 | 1.77 | 1.12 | 1.12 |
| | Adjacent Collocation - DS3 Cross-Connects | | | UE3 | PE1JH | 19.03 | 26.23 | 15.51 | 13.40 | 10.77 | | | 1.77 | 1.77 | 1.12 | 1.12 |
| | Adjacent Collocation - 2-Fiber Cross-Connect | | | CLOAC | PE1JJ | 3.49 | 26.23 | 15.51 | 13.41 | 10.78 | | | 1.77 | 1.77 | 1.12 | 1.12 |
| | Adjacent Collocation - 4-Fiber Cross-Connect | | | CLOAC | PE1JK | 6.50 | 29.75 | 19.02 | 17.60 | 14.97 | | | 1.77 | 1.77 | 1.12 | 1.12 |
| | Adjacent Collocation - Application Fee | | | CLOAC | PE1JB | | 2,973.00 | | 0.95 | | | | 0.00 | 0.00 | 0.00 | 0.00 |
| | Adjacent Collocation - 120V, Single Phase Standby Power Rate per AC Breaker Amp | | | CLOAC | PE1JL | 5.81 | | | | | | | | | | |
| | Adjacent Collocation - 240V, Single Phase Standby Power Rate per AC Breaker Amp | | | CLOAC | PE1JM | 11.64 | | | | | | | | | | |
| | Adjacent Collocation - 120V, Three Phase Standby Power Rate per AC Breaker Amp | | | CLOAC | PE1JN | 17.45 | | | | | | | | | | |
| | Adjacent Collocation - 277V, Three Phase Standby Power Rate per AC Breaker Amp | | | CLOAC | PE1JO | 40.30 | | | | | | | | | | |
| | **Note: Rates displaying an "I" in Interim column are interim as a result of a Commission order.** | | | | | | | | | | | | | | | |

# Attachment 5

# Access to Numbers and Number Portability

# TABLE OF CONTENTS

**1. NON-DISCRIMINATORY ACCESS TO TELEPHONE NUMBERS ..... 3**

**2. LOCAL NUMBER PORTABILITY..... 4**

**3. OSS RATES .....5**

**4. LNP IN CONJUNCTION WITH LOCAL SWITCHING ..... 5**

# ACCESS TO NUMBERS AND NUMBER PORTABILITY

## 1. NON-DISCRIMINATORY ACCESS TO TELEPHONE NUMBERS

1.1 During the term of this Agreement, where Comcast Phone is utilizing its own switch, Comcast Phone shall contact the North American Numbering Plan Administrator (NANPA), or, where applicable, the relevant Number Pool Administrator for the assignment of numbering resources.

1.2 Where BellSouth provides local switching or resold services to Comcast Phone, BellSouth will provide Comcast Phone with online access to available telephone numbers as defined by applicable FCC rules and regulations on a first come first served basis. Comcast Phone acknowledges that such access to numbers shall be in accordance with the appropriate FCC rules and regulations. Comcast Phone may designate up to a forecasted six (6) months supply of available numbers as intermediate (an available number provided to Comcast Phone) telephone numbers per rate center if the following conditions are met:

1.2.1 Comcast Phone must: (1) indicate that all of the intermediate numbers currently held by Comcast Phone in each rate center where Comcast Phone will be requesting intermediate telephone numbers have six (6) or less months to exhaust; (2) supply projected monthly telephone number demand on a rate center basis for the coming twelve (12) months for each rate center where Comcast Phone will be requesting intermediate telephone numbers; and, (3) demonstrate that the utilization level on current intermediate numbers held by Comcast Phone in the rate center where Comcast Phone is requesting telephone numbers has reached at least 75%.

1.2.2 The above information will be provided by Comcast Phone by submitting to BellSouth a fully completed "CO Code Assignments Months To Exhaust Certification Worksheet – TN Level" ("MTE Worksheet"), Appendix B to the Central Office Code (NXX) Assignments Guidelines, INC 95-0407-008 for each rate center where Comcast Phone will be requesting intermediate telephone numbers. The utilization level is calculated by dividing all intermediate numbers currently assigned by Comcast Phone to End Users by the total number of intermediate numbers held by Comcast Phone in the rate center and multiplying the result by one hundred (100).

1.2.3 If fulfilling Comcast Phone's request for intermediate numbers results in BellSouth having to submit a request for additional telephone numbers to a national numbering administrator (either NANPA CO Code Administration or NeuStar Pooling Administration or their successors), BellSouth will submit the required numbering request to the national numbering administrator to satisfy Comcast

Phone's request for intermediate numbers. BellSouth will also pursue all appropriate steps (including submitting a safety valve request (petition) to the appropriate Commission if the numbering request is denied by the national administrator) to satisfy Comcast Phone's request for intermediate numbers. In these cases, BellSouth is not obligated to fulfill the request by Comcast Phone for intermediate numbers unless, and until, BellSouth's request for additional numbering resources is granted.

1.2.4 Comcast Phone agrees to supply supporting information for any numbering request and/or safety valve request that BellSouth files pursuant to Section 1.2.3above.

1.3 Comcast Phone acknowledges that there may be instances where there is an industry shortage of available telephone numbers in a number plan area (NPA). These instances occur where a jeopardy status has been declared by NANPA and the industry has determined that limiting the assignment of new numbers is the appropriate method to employ until the jeopardy can be alleviated. In such NPA jeopardy situations where assignment of new numbers is restricted per the jeopardy guidelines developed by the industry, BellSouth may request that Comcast Phone cancel all or a portion of its unassigned intermediate numbers. Comcast Phone's consent to BellSouth's request shall not be unreasonably withheld.

## 2. LOCAL NUMBER PORTABILITY

2.1 The Parties will offer Local number portability (LNP) in accordance with rules, regulations and guidelines adopted by the Commission, the FCC and industry fora.

2.2 Service Management System (SMS) Administration. The Parties will work cooperatively with other local service providers to establish and maintain contracts for the LNP SMS.

2.3 Network Architecture. The Parties agree to adhere to applicable FCC rules and orders governing LNP network architecture.

2.4 Signaling. In connection with LNP, each Party agrees to use SS7 signaling in accordance with applicable FCC rules and orders.

2.5 N-1 Query. The Parties agree to adhere to applicable FCC rules and orders governing LNP N-1 queries.

2.6 Porting of Reserved Numbers and Suspended Lines. End Users of each Party may port numbers, via LNP, that are in a denied state or that are on suspend status. In addition, End Users of each Party may port reserved numbers that the End User has paid to reserve. Portable reserved numbers are identified on the Customer Service Record (CSR). In anticipation of porting from one Party to the other Party, a Party's End User may reserve additional telephone numbers and include them with the numbers that are subsequently ported to the other Party. It is not necessary to restore a denied number before it is ported.

2.7 Splitting of Number Groups. The Parties shall permit blocks of subscriber numbers (including, but not limited to, Direct Inward Dial (DID) numbers and MultiServ groups) to be split in connection with an LNP request. BellSouth and Comcast Phone shall permit End Users who port a portion of DID numbers to retain DID service on the remaining portion of numbers. If a Party requests porting a range of DID numbers smaller than a whole block, that Party shall pay the applicable charges for doing so as set forth in Attachment 2 of this Agreement. In the event no rate is set forth in Attachment 2, then the Parties shall negotiate a rate for such services.

2.8 The Parties will set Location Routing Number (LRN) unconditional or 10-digit triggers where applicable. Where triggers are set, the porting Party will remove the ported number at the same time the trigger is removed.

2.9 A trigger order is a service order issued in advance of the porting of a number. A trigger order 1) initiates call queries to the AIN SS7 network in advance of the number being ported; and 2) provides for the new service provider to be in control of when a number ports.

2.10 Where triggers are not set, the Parties shall coordinate the porting of the number between service providers so as to minimize service interruptions to the End User.

2.11 BellSouth and Comcast Phone will work cooperatively to implement changes to LNP process flows ordered by the FCC or as recommended by standard industry foras addressing LNP.

2.12 Where Comcast Phone utilizes BellSouth's LNP Query Service, BellSouth shall bill and Comcast Phone shall pay the query charge associated with LNP Query Service as set forth in Attachment 2. To receive the LNP Query Service charge set forth in Attachment 2, Comcast Phone shall fill out and submit the Interconnection data sheet for BellSouth LNP Query Service. The form can be obtained on www.interconnection.bellsouth.com under BellSouth LNP Query Service and click on forms. Once the form has been filled out and submitted the LNP Query charge will take effect on the approved date. This charge is not subject to the resale discount set forth in Attachment 1 of this Agreement.

## 3. OSS RATES

3.1 The terms, conditions and rates for OSS utilized in connection with LNP are as set forth in Exhibit A of Attachment 2.

## 4. LNP IN CONJUNCTION WITH LOCAL SWITCHING

4.1 Where Comcast Phone purchases local switching from BellSouth, the Parties shall adhere to the following processes:

4.2 When Comcast Phone submits an LSR for services, if the telephone number associated with the services requested resides in a switch other than BellSouth's, then BellSouth will submit an LNP LSR to the appropriate switch owner.

Comcast Phone shall be responsible for reimbursing BellSouth for any costs or charges imposed on BellSouth by the switch owner resulting from the submission of the LNP LSR. In addition, Comcast Phone shall pay to BellSouth the manual service order charges specified in Exhibit A of Attachment 2 of this Agreement for BellSouth's creation and submission of the LNP LSR to the appropriate switch owner.

4.3 Working telephone numbers, telephone numbers for which payment has been made to reserve and telephone numbers that are in a denied state (but not disconnected) or suspended status may be subject to porting.

# Attachment 6

# Pre-Ordering, Ordering, Provisioning, Maintenance and Repair

# TABLE OF CONTENTS

**1. QUALITY OF PRE-ORDERING, ORDERING, PROVISIONING, MAINTENANCE AND REPAIR. 3**

**2. ACCESS TO OPERATIONS SUPPORT SYSTEMS ..... 3**

**3. MISCELLANEOUS ..... 7**

# PRE-ORDERING, ORDERING, PROVISIONING, MAINTENANCE AND REPAIR

## 1. QUALITY OF PRE-ORDERING, ORDERING, PROVISIONING, MAINTENANCE AND REPAIR

1.1 BellSouth shall provide to Comcast Phone nondiscriminatory access to its Operations Support Systems (OSS) and the necessary information contained therein in order that Comcast Phone can perform the functions of pre-ordering, ordering, provisioning, maintenance and repair, and billing. BellSouth shall provide Comcast Phone with all relevant documentation (manuals, user guides, specifications, etc.) regarding business rules and other formatting information as well as practices and procedures necessary to ensure requests are efficiently processed. All documentation will be readily accessible at BellSouth's Interconnection Web site and is incorporated herein by reference. BellSouth shall ensure that its OSS are designed to accommodate requests for both current and projected demands of Comcast Phone and other CLECs in the aggregate.

## 2. ACCESS TO OPERATIONS SUPPORT SYSTEMS

2.1 BellSouth shall provide nondiscriminatory access to the OSS through manual and/or electronic interfaces as described in this Attachment. It is the sole responsibility of Comcast Phone to obtain the technical capability to access and utilize BellSouth's OSS interfaces. Specifications for Comcast Phone's access and use of BellSouth's electronic interfaces are set forth at BellSouth's Interconnection Web site and are incorporated herein by reference.

2.1.1 Comcast Phone agrees to comply with the provisions of the Operations Support Systems (OSS) Interconnection Volume Guidelines as set forth at BellSouth's Interconnection Web site, and incorporated herein by reference as amended from time to time.

2.2 Pre-Ordering. In accordance with FCC and Commission rules and orders, BellSouth will provide electronic access to its OSS and the information contained therein in order that Comcast Phone can perform the following pre-ordering functions: service address validation, telephone number selection, service and feature availability, due date information, customer record information and loop makeup information. Mechanized access is provided by electronic interfaces whose specifications for access and use are set forth at BellSouth's Interconnection Web site www.interconnection.bellsouth.com and are incorporated herein by reference. The process by which BellSouth and Comcast Phone will manage these electronic interfaces to include the development and introduction of new interfaces will be governed by the change management process as described in Section 2.7 below. Comcast Phone shall provide to BellSouth

access to customer record information, including circuit numbers associated with each telephone number where applicable. Comcast Phone shall provide such information within four (4) hours after request via electronic access where available. If electronic access is not available, Comcast Phone shall provide to BellSouth paper copies of customer record information, including circuit numbers associated with each telephone number where applicable within twenty-four (24) Comcast business hours.

2.2.1 The Parties agree not to view, copy, or otherwise obtain access to the customer record information of any customer without that customer's permission. The Parties will obtain access to customer record information only in strict compliance with applicable laws, rules, or regulations of the state in which the service is provided. Each Party reserves the right to audit the other Party's access to customer record information. If a BellSouth audit of Comcast Phone's access to customer record information reveals that Comcast Phone is accessing customer record information without having obtained the proper End User authorization, BellSouth upon reasonable notice to Comcast Phone may take corrective action, including but not limited to suspending or terminating Comcast Phone's electronic access to BellSouth's OSS functionality. If a Comcast Phone audit of BellSouth's access to customer record information reveals that Bellsouth is accessing customer record information with out having obtained the proper End User authorization, Comcast Phone upon reasonable notice to BellSouth may take corrective action, including but not limited to suspending BellSouth's access to customer record information. All such information obtained through an audit shall be deemed Information covered by the Proprietary and Confidential Information section in the General Terms and Conditions of this Agreement.

2.3 Ordering. BellSouth will make available to Comcast Phone electronic interfaces for the purpose of exchanging order information, including order status and completion notification, for non-complex and certain complex resale requests and certain network elements. Specifications for access and use of BellSouth's electronic interfaces are set forth at BellSouth's Interconnection Web site and are incorporated herein by reference as they are amended from time to time. The process by which BellSouth and Comcast Phone will manage these electronic interfaces to include the development and introduction of new interfaces will be governed by the change management process as described below.

2.3.1 Comcast Phone shall place orders for services by submitting a local service request ("LSR") to BellSouth. BellSouth shall bill Comcast Phone an electronic service order charge at the rate set forth in the applicable Attachment to this Agreement for each LSR submitted by means of an electronic interface. BellSouth shall bill Comcast Phone a manual service order charge at the rate set forth in the applicable Attachment to this Agreement for each LSR submitted by means other than the electronic Interfaces (e.g. mail, fax, courier, etc.). An individual LSR will be identified for billing purposes by its Purchase Order Number ("PON").

2.3.1.1 Comcast Phone may submit an LSR to request that an End User's service be temporarily suspended, denied, or restored. Alternatively, Comcast Phone may submit a list of such End Users if Comcast Phone provides a separate PON for each location on the list. Each location will be billed as a separate LSR.

2.3.1.2 BellSouth will bill the electronic or manual service order charge, as applicable, for an LSR, regardless of whether that LSR is later supplemented, clarified or cancelled.

2.3.1.3 Notwithstanding the foregoing, BellSouth will not bill an additional electronic or manual service order charge for supplements to any LSR submitted to clarify, correct, change or cancel a previously submitted LSR.

2.4 Provisioning. BellSouth shall provision services during its regular working hours. To the extent Comcast Phone requests provisioning of service to be performed outside BellSouth's regular working hours, or the work so requested requires BellSouth's technicians or project managers to work outside of regular working hours, overtime charges set forth in BellSouth's State E Tariff, Section 13.2, shall apply. Notwithstanding the foregoing, if such work is performed outside of regular working hours by a BellSouth technician or project manager during his or her scheduled shift and BellSouth does not incur any overtime charges in performing the work on behalf of Comcast Phone, BellSouth will not assess Comcast Phone additional charges beyond the rates and charges specified in this Agreement.

2.4.1 In the event BellSouth must dispatch to the End User's location more than once due to incorrect or incomplete information provided by Comcast Phone (e.g., incomplete address, incorrect contact name/number, etc.), BellSouth will bill Comcast Phone for each additional dispatch required to provision the circuit due to the incorrect/incomplete information provided. BellSouth will assess the applicable Maintenance of Service rates from BellSouth's FCC No. 1 Tariff, Section 13.3.1 (E).

2.4.2 Cancellation Charges. If Comcast Phone cancels an LSR for network elements or resold services, any costs incurred by BellSouth in conjunction with the provisioning of that request will be recovered in accordance with BellSouth's Private Line Tariff or BellSouth's FCC No. 1 Tariff, Section 5.4, as applicable.

2.4.2.1 Notwithstanding the foregoing, if Comcast Phone places an LSR based upon BellSouth's loop makeup information, and such information is inaccurate resulting in the inability of BellSouth to provision the network elements requested and another spare compatible facility cannot be found with the transmission characteristics of the network elements originally requested, cancellation charges described in this Section shall not apply. Where Comcast Phone places a single LSR for multiple network elements or services based upon loop makeup

information, and information as to some, but not all, of the network elements or services is inaccurate, if BellSouth cannot provision the network elements or services that were the subject of the inaccurate loop makeup information, Comcast Phone may cancel its request for those network elements or services without incurring cancellation charges as described in this Section. In such instance, should Comcast Phone elect to cancel the entire LSR, cancellation charges as described in this Section shall apply to those elements and services that were not the subject of inaccurate loop makeup.

2.4.3 Service Date Advancement Charges (Expedites). For Service Date Advancement requests by Comcast Phone, Service Date Advancement charges will apply for intervals less than the standard interval as outlined in the BellSouth Product and Services Interval Guide. The charges as outlined in Exhibit A of Attachment 2 of this Agreement will apply.

2.4.4 Order Modification Charges. If Comcast Phone modifies an order after being sent a Firm Order Confirmation (FOC) from BellSouth, the Order Modification Charge (OMC) or Order Modification Charge Additional Dispatch (OMCAD) will be paid by Comcast Phone in accordance with Exhibit A of Attachment 2 of this Agreement.

2.5 Maintenance and Repair. BellSouth will make available to Comcast Phone electronic interfaces for the purpose of reporting and monitoring service troubles. Specifications for access and use of BellSouth's maintenance and repair electronic interfaces are set forth at BellSouth's Interconnection Web site and are incorporated herein by reference. The process by which BellSouth and Comcast Phone will manage these electronic interfaces to include the development and introduction of new interfaces will be governed by the change management process as described below. Requests for trouble repair are billed in accordance with the provisions of this Agreement. BellSouth and Comcast Phone agree to adhere to BellSouth's Operational Understanding, as amended from time to time during this Agreement and as incorporated herein by reference. The Operational Understanding may be accessed via BellSouth's Interconnection Web site.

2.5.1 If Comcast Phone reports a trouble on a Network Element or Other Service and no trouble actually exists on the BellSouth portion, BellSouth will charge Comcast Phone for any dispatching and testing (both inside and outside the Central Office (CO)) required by BellSouth in order to confirm the working status.

2.5.2 In the event BellSouth must dispatch to the End User's location more than once due to incorrect or incomplete information provided by Comcast Phone (e.g., incomplete address, incorrect contact name/number, etc.), BellSouth will bill Comcast Phone for each additional dispatch required to repair the circuit due to the incorrect/incomplete information provided. BellSouth will assess the

applicable Maintenance of Service rates from BellSouth's FCC No. 1 Tariff, Section 13.3.1 (E).

2.6 Billing. BellSouth will provide Comcast Phone nondiscriminatory access to billing information as specified in Attachment 7 to this Agreement.

2.7 Change Management. BellSouth and Comcast Phone agree that the collaborative change management process known as the Change Control Process (CCP) will be used to manage changes to existing BellSouth interfaces, introduction of new BellSouth interfaces and retirement of BellSouth interfaces. BellSouth and Comcast Phone agree to comply with the provisions of the documented Change Control Process as may be amended from time to time and incorporated herein by reference. The change management process will cover changes to BellSouth's electronic interfaces, BellSouth's testing environment, associated manual process improvements, and relevant documentation. The process will define a procedure for resolution of change management disputes. Documentation of the CCP as well as related information and processes will be clearly organized and readily accessible to Comcast Phone at BellSouth's Interconnection Web site.

2.8 Rates. Unless otherwise specified herein, charges for the use of BellSouth's Operations Support Systems (OSS), and other charges applicable to pre-ordering, ordering, provisioning and maintenance and repair, shall be at the rates set forth in the applicable Attachment of this Agreement.

2.9 The Commissions in some states have ordered per element manual additive nonrecurring charges (NRC) for Network Elements and Other Services ordered by means other than one of the interactive interfaces. These ordered Network Elements and Other Services manual additive NRCs will apply in these states, rather than the charge per LSR. The per element charges are listed in Exhibit A of Attachment 2.

## 3. MISCELLANEOUS

3.1 Pending Orders. To the extent that Comcast Phone submits an LSR with incomplete, incorrect or conflicting information, BellSouth will return the LSR to Comcast Phone for clarification. Comcast Phone shall respond to the request for clarification within thirty (30) days by submitting a supplemental LSR. If Comcast Phone does not submit a supplement LSR within thirty (30) days, BellSouth will cancel the original LSR and Comcast Phone shall be required to submit a new LSR, with a new PON.

3.2 Single Point of Contact. Comcast Phone will be the single point of contact with BellSouth for ordering activity for network elements and other services used by Comcast Phone to provide services to its End Users, except that BellSouth may accept a request directly from another CLEC, or BellSouth, acting with authorization of the affected End User. Comcast Phone and BellSouth shall each

execute a blanket letter of authorization with respect to customer requests so that prior proof of End User authorization will not be necessary with every request (except in the case of a local service freeze). The Parties shall each be entitled to adopt their own internal processes for verification of customer authorization for requests, provided, however, that such processes shall comply with applicable state and federal law and industry and regulatory guidelines. Pursuant to a request from another carrier, BellSouth may disconnect any network element being used by Comcast Phone to provide service to that End User and may reuse such network elements or facilities to enable such other carrier to provide service to the End User. BellSouth will notify Comcast Phone that such a request has been processed but will not be required to notify Comcast Phone in advance of such processing.

3.2.1 Neither BellSouth nor Comcast Phone shall prevent or delay an End User from migrating to another carrier because of unpaid bills, denied service, or contract terms.

3.2.2 The Parties shall return a Firm Order Confirmation (FOC) and Local Service Request (LSR) rejection/clarification in accordance with the intervals specified in Attachment 9 of this Agreement.

3.2.3 Use of Facilities. When an End User of Comcast Phone elects to discontinue service and to transfer service to another local exchange carrier, including BellSouth, BellSouth shall have the right to reuse the facilities provided to Comcast Phone by BellSouth. In addition, where BellSouth provides local switching, BellSouth may disconnect and reuse facilities when the facility is in a denied state and BellSouth has received a request to establish new service or transfer service from an End User or from a CLEC. BellSouth will notify Comcast Phone that such a request has been processed after the disconnect order has been completed.

3.3 Contact Numbers. The Parties agree to provide one another with toll-free nation-wide (50 states) contact numbers for the purpose of ordering, provisioning and maintenance of services. Contact numbers for maintenance/repair of services shall be staffed 24 hours per day, 7 days per week. BellSouth will close trouble tickets after making a reasonable effort to contact Comcast Phone for authorization to close a ticket. BellSouth will place trouble tickets in delayed maintenance status after making a reasonable effort to contact Comcast Phone to request additional information or to request authorization for additional work deemed necessary by BellSouth.

3.4 Subscription Functions. In cases where BellSouth performs subscription functions for an interexchange carrier (IXC) (i.e. PIC and LPIC changes via Customer Account Record Exchange (CARE)), BellSouth will in all possible instances provide the affected IXCs with the Operating Company Number (OCN) of the

local provider for the purpose of obtaining End User billing account and other End User information required under subscription requirements.

3.4.1 When Comcast Phone's End User, served by resale or loop and port combinations, changes its PIC or LPIC, and per BellSouth's FCC or state tariff the interexchange carrier elects to charge the End User the PIC or LPIC change charge, BellSouth will bill the PIC or LPIC change charge to Comcast Phone, which has the billing relationship with that End User, and Comcast Phone may pass such charge to the End User.

# Attachment 7

# Billing

# TABLE OF CONTENTS

**1. PAYMENT AND BILLING ARRANGEMENTS..... 3**

**2. BILLING DISPUTES..... 10**

**3. REVENUE ACCOUNTING OFFICE (RAO) HOSTING ..... 11**

**Rates…….Exhibit A**

# BILLING

## 1. PAYMENT AND BILLING ARRANGEMENTS

The terms and conditions set forth in this Attachment shall apply to all services ordered and provisioned pursuant to this Agreement.

1.1 BellSouth will bill through the Carrier Access Billing System (CABS), Integrated Billing System (IBS) and/or the Customer Records Information Systems (CRIS) depending on the particular service(s) provided to Comcast Phone under this Agreement. BellSouth will format all bills in CABS Billing Output Specification (CBOS) Standard or CLUB/EDI format, depending on the type of service provided. For those services where standards have not yet been developed, BellSouth's billing format may change in accordance with applicable industry standards.

1.1.1 For any service(s) BellSouth receives from Comcast Phone, Comcast Phone shall bill BellSouth in CBOS format.

1.1.2 Any switched access charges associated with interexchange carrier access to the resold local exchange lines will be billed by, and due to BellSouth.

1.1.3 BellSouth will render bills each month on established bill days for each of Comcast Phone's accounts. If either Party requests multiple billing media or additional copies of the bills, the billing Party will provide these at the rates set forth in BellSouth's FCC No. 1 Tariff, Section 13.3.6.3, except for resold services which shall be at the rates set forth in BellSouth's Non-Regulated Services Pricing List N6.

1.1.4 BellSouth will bill Comcast Phone in advance for all services to be provided during the ensuing billing period except charges associated with service usage and nonrecurring charges, which will be billed in arrears.

1.1.4.1 For resold services, charges for services will be calculated on an individual End User account level, including, if applicable, any charge for usage or usage allowances. BellSouth will also bill Comcast Phone, and Comcast Phone will be responsible for and remit to BellSouth, all charges applicable to said services including but not limited to 911 and E911 charges, End Users common line charges, federal subscriber line charges, telecommunications relay charges, and franchise fees, unless otherwise ordered by a Commission.

1.1.5 BellSouth will not perform billing and collection services for Comcast Phone as a result of the execution of this Agreement.

1.2 Establishing Accounts. After submitting a credit profile and deposit, if required, and after receiving certification as a local exchange carrier from the appropriate Commission, Comcast Phone will provide the appropriate BellSouth advisory

team/local contract manager the necessary documentation to enable BellSouth to establish accounts for Local Interconnection, Network Elements and Other Services and/or resold services. Such documentation shall include the Application for Master Account, if applicable, proof of authority to provide telecommunications services, the appropriate Operating Company Numbers (OCN) for each state as assigned by the National Exchange Carriers Association (NECA), Carrier Identification Code (CIC), if applicable, Access Customer Name and Abbreviation (ACNA), if applicable, Blanket Letter of Authorization (LOA), Misdirected Number form, and a tax exemption certificate, if applicable. Notwithstanding anything to the contrary in this Agreement, Comcast Phone may not order services under a new account established in accordance with this Section 1.2 until thirty (30) days after all information specified in this Section 1.2 is received from Comcast Phone.

1.2.1 Company Identifiers. If Comcast Phone needs to change, add to, eliminate or convert its OCN(s), ACNAs and other identifying codes (collectively "Company Identifiers") under which it operates when Comcast Phone has already been conducting business utilizing those Company Identifiers, Comcast Phone shall pay all just and reasonable charges as a result of such change, addition, elimination or conversion to the new Company Identifiers. Upon mutual agreement of the Parties, such change, addition, elimination or conversion to the new Company Identifiers may be done pursuant to a separately negotiated agreement. If no agreement can be mutually agreed upon, the aggrieved party may pursue the dispute resolution procedure outlined in this Agreement.

1.2.2 Tax Exemption. It is the responsibility of Comcast Phone to provide BellSouth with a properly completed tax exemption certificate at intervals required by the appropriate taxing authorities. A tax exemption certificate must be supplied for each individual Comcast Phone entity purchasing Services under this Agreement. Upon BellSouth's receipt of a properly completed tax exemption certificate, subsequent billings to Comcast Phone will not include those taxes or fees from which Comcast Phone is exempt. Prior to receipt of a properly completed exemption certificate, BellSouth shall bill, and Comcast Phone shall pay all applicable taxes and fees. In the event that Comcast Phone believes that it is entitled to an exemption from and refund of taxes with respect to the amount billed prior to BellSouth's receipt of a properly completed exemption certificate, BellSouth shall assign to Comcast Phone its rights to claim a refund of such taxes. If applicable law prohibits the assignment of tax refund rights or requires the claim for refund of such taxes to be filed by BellSouth, BellSouth shall, after receiving a written request from Comcast Phone and at Comcast Phone's sole expense, pursue such refund claim on behalf of Comcast Phone, provided that Comcast Phone promptly reimburses BellSouth for any costs and expenses incurred by BellSouth in pursuing such refund claim, and provided further that BellSouth shall have the right to deduct any such outstanding costs and expenses from the amount of any refund obtained prior to remitting such refund to Comcast Phone. Comcast Phone shall be solely responsible for the computation, tracking, reporting and payment of

all taxes and fees associated with the services provided by Comcast Phone to its End Users.

1.3 Deposit Policy. Prior to the inauguration of service or, thereafter, upon BellSouth's request, Comcast Phone shall complete the BellSouth Credit Profile (BellSouth form) and provide information to BellSouth regarding Comcast Phone's credit and financial condition. Based on BellSouth's analysis, which analysis shall be preformed in a commercially reasonable manner, of the BellSouth Credit Profile and other relevant information regarding Comcast Phone.s credit and financial condition, BellSouth reserves the right to require Comcast Phone to provide BellSouth with a suitable form of security deposit for Comcast Phone's account(s). If, in BellSouth's reasonable business judgment, circumstances so warrant and/or Comcast Phone's gross monthly billing has increased significantly, BellSouth reserves the right to request additional security (or to require a security deposit if none was previously requested). In determining an adverse material change, BellSouth may evaluate factors such as payment history with suppliers, bank relationships, audited financial statements ratios, years in business, management history, number of liens, suits or judgments and pay history with BellSouth. Such adverse material changes may not be measured based upon changes that alone would not be deemed material.

1.3.1 Security deposit shall take the form of cash, an Irrevocable Letter of Credit (BellSouth form), Surety Bond (BellSouth form) or, in BellSouth's sole discretion, some other form of security proposed by Comcast Phone. Any such security deposit shall in no way release Comcast Phone from its obligation to make complete and timely payments of its bill(s). If BellSouth requires Comcast Phone to provide a security deposit, Comcast Phone shall provide such security deposit prior to the inauguration of service or within fifteen (15) days of BellSouth's request, as applicable or as otherwise agreed to by the Parties. Deposit request notices will be sent to Comcast Phone via certified mail or overnight delivery. Such notice period will start the day after the deposit request notice is rendered by certified mail or overnight delivery. Interest on a cash security deposit shall accrue and be applied or refunded in accordance with the terms in BellSouth's General Subscriber Services Tariff (GSST).

1.3.1.1 If Comcast Phone establishes a consecutive twelve (12) month prompt payment history and then requests BellSouth to review Comcast Phone's credit risk status and if the review determines that payment manner and other factors used in a commercially reasonable manner indicate that Comcast Phone is no longer a credit risk, or if this Agreement is terminated, the deposit plus accrued interest to a cash deposit, if applicable, will be applied to Comcast Phone's account. Notwithstanding the foregoing, in the event that BellSouth is holding a security deposit under this Agreement at the time the Parties enter into a Subsequent Agreement containing a provision for payment of deposits, BellSouth may

continue to hold the deposit in accordance with such terms in the Subsequent Agreement.

1.3.2 Security deposits collected under this Section 1.3 shall not exceed two (2) months' estimated billing. Estimated billings are calculated based upon the monthly average of the previous six (6) months current billings, if Comcast Phone has received service from BellSouth during such period at a level comparable to that anticipated to occur over the next six (6) months. If either Comcast Phone or BellSouth has reason to believe that the level of service to be received during the next six (6) months will be materially higher or lower than received in the previous six (6) months, Comcast Phone and BellSouth shall agree on a level of estimated billings based on all relevant information.

1.3.3 In the event Comcast Phone fails to provide BellSouth with a suitable form of security deposit or additional security deposit as required herein, defaults on its account(s), or otherwise fails to make any payment or payments required under this Agreement in the manner and within the time required, service to Comcast Phone may be Suspended, Discontinued or Terminated in accordance with the terms of Section 1.5 below. Upon Termination of services, BellSouth shall apply any security deposit to Comcast Phone's final bill for its account(s) and refund any excess.

1.3.3.1 At least seven (7) days prior to the expiration of any letter of credit provided by Comcast Phone as security under this Agreement, Comcast Phone shall renew such letter of credit or provide BellSouth with evidence that Comcast Phone has obtained a suitable replacement for the letter of credit. If Comcast Phone fails to comply with the foregoing, BellSouth shall thereafter be authorized to draw down the full amount of such letter of credit and utilize the cash proceeds as security for Comcast Phone accounts(s). If Comcast Phone provides a security deposit or additional security deposit in the form of a surety bond as required herein, Comcast Phone shall renew the surety bond or provide BellSouth with evidence that Comcast Phone has obtained a suitable replacement for the surety bond at least seven (7) days prior to the cancellation date of the surety bond. If Comcast Phone fails to comply with the foregoing, BellSouth shall thereafter be authorized to take action on the surety bond and utilize the cash proceeds as security for Comcast Phone's account(s). If the credit rating of any bonding company that has provided Comcast Phone with a surety bond provided as security hereunder has fallen below B, BellSouth will provide written notice to Comcast Phone that Comcast Phone must provide a replacement bond or other suitable security within fifteen (15) days of BellSouth's written notice. If Comcast Phone fails to comply with the foregoing, BellSouth shall thereafter be authorized to take action on the surety bond and utilize the cash proceeds as security for Comcast Phone's account(s). Notwithstanding anything contained in this Agreement to the contrary, BellSouth shall be authorized to draw down the full amount of any letter of credit or take action on any surety bond provided by Comcast Phone as security hereunder if Comcast Phone defaults on its account(s) or otherwise fails to make

any payment or payments of undisputed amounts as required under this Agreement in the manner and within the time, as required herein.

1.4 Payment Responsibility. Payment of all undisputed charges will be the responsibility of Comcast Phone. Comcast Phone shall pay invoices by utilizing wire transfer services or automatic clearing house services as otherwise agreed by the Parties. Comcast Phone shall make payment to BellSouth for all services billed including disputed amounts. BellSouth will not become involved in billing disputes that may arise between Comcast Phone and Comcast Phone's End User.

1.4.1 Payment Due. Payment of undisputed charges for services provided by BellSouth, including disputed charges, is due on or before the next bill date, i.e., the same date in the following month as the bill date, and is payable in immediately available funds. Information required to apply payments must accompany the payment. The information must notify BellSouth of Billing Account Numbers (BAN) paid; invoices paid and the amount to be applied to each BAN and invoice (Remittance Information). Payment is considered to have been made when the payment and Remittance Information are received by BellSouth. If the Remittance Information is not received with payment, BellSouth will be unable to apply amounts paid to Comcast Phone's accounts. In such event, BellSouth shall hold such funds until the Remittance Information is received. If BellSouth does not receive the Remittance Information by the payment due date for any account(s), late payment charges shall apply.

1.4.1.1 Due Dates. If the payment due date falls on a Sunday or on a holiday that is observed on a Monday, the payment due date shall be the first non-holiday day following such Sunday or holiday. If the payment due date falls on a Saturday or on a holiday which is observed on Tuesday, Wednesday, Thursday, or Friday, the payment due date shall be the last non-holiday day preceding such Saturday or holiday. If payment is not received by the payment due date, a late payment charge, as set forth in Section 1.4.1.2, below, shall apply.

1.4.1.2 Late Payment. If any portion of the payment is not received by the billing Party on or before the payment due date as set forth preceding, or if any portion of the payment is received by the billing Party in funds that are not immediately available to the billing Party, then a late payment and/or interest charge shall be due to the billing Party. The late payment and/or interest charge shall apply to the portion of the payment not received and shall be assessed by BellSouth as set forth in Section A2 of the General Subscriber Services Tariff, Section B2 of the Private Line Service Tariff or Section E2 of the Intrastate Access Tariff, or pursuant to the applicable state law, whichever is lower. The late payment or interest charge assessed by Comcast shall be the maximum rate permitted by law. In addition to any applicable late payment and/or interest charges, the billed Party may be charged a fee for all returned checks at the rate set forth in Section A2 of the General Subscriber Services Tariff or pursuant to the applicable state law.

Returned check charges assessed by Comcast shall be at a rate reciprocal to that charged by BellSouth or the applicable state law.

1.5 Discontinuing Service to Comcast Phone. The procedures for discontinuing service to Comcast Phone are as follows:

1.5.1 In order of severity, Suspend/Suspension, Discontinue/Discontinuance and Terminate/Termination are defined as follows for the purposes of this Attachment:

1.5.1.1 Suspend/Suspension is the temporary restriction of the billed Party's access to the ordering systems and/or access to the billed Party's ability to initiate PIC-related changes. In addition, during Suspension, pending orders may not be completed and orders for new service or changes to existing services may not be accepted.

1.5.1.2 Discontinue/Discontinuance is the denial of service by the billing Party to the billed Party that will result in the disruption and discontinuation of service to the billed Party's End Users or customers. Additionally, at the time of Discontinuance, BellSouth will remove any Local Service Freezes in place on the billed Party's End Users.

1.5.1.3 Terminate/Termination is the disconnection of service by the billing Party to the billed Party.

1.5.2 BellSouth reserves the right to Suspend, Discontinue or Terminate service in the event of prohibited, unlawful or improper use of BellSouth facilities or service, abuse of BellSouth facilities, or any other violation or noncompliance by Comcast Phone of the rules and regulations of BellSouth's tariffs.

1.5.3 Suspension. If payment of undisputed amounts due as described herein is not received by the bill date, i.e., the same date in the following month after the original bill date, or fifteen (15) days from the date of a deposit request in the case of security deposits, BellSouth will provide written notice to Comcast Phone that services will be Suspended if payment of such undisputed amounts, and all other undisputed amounts that become past due before Suspension, is not received by wire transfer, automatic clearing house or cashier's check in the manner set forth in Section 1.4.1 above, or in the case of a security deposit request, in the manner set forth in Section 1.3.1: (1) within seven (7) days following such notice for CABS billed services; (2) within fifteen (15) days following such notice for CRIS and IBS billed services; and (3) within seven (7) days following such notice for security deposit requests.

1.5.3.1 The Suspension notice shall also provide that all past due undisputed charges for CRIS and IBS billed services, and all other undisputed amounts that become past due for such services before Discontinuance, must be paid within thirty (30) days from the date of the Suspension notice to avoid Discontinuance of CRIS and IBS billed services.

1.5.3.2 For CABS billed services, BellSouth will provide a Discontinuance notice that is separate from the Suspension notice, that all past due charges for CABS billed Services, and all other amounts that become past due for such services before Discontinuance, must be paid within thirty (30) days from the date of the Suspension notice to avoid Discontinuance of CABS billed services. This Discontinuance notice may be provided at the same time that BellSouth provides the Suspension notice.

1.5.4 Discontinuance. If payment of undisputed amounts due as described herein is not received by the bill date, i.e., the same date in the following month after the original bill date, BellSouth will provide written notice that BellSouth may Discontinue the provision of existing services to Comcast Phone if payment of such undisputed amounts, and all other undisputed amounts that become past due before Discontinuance, including requested security deposits, is not received by wire transfer, automatic clearing house or cashier's check in the manner set forth in Section 1.4.1 above or in the case of a deposit in accordance with Section 1.3.1, within thirty (30) days following such written notice; provided, however, that BellSouth may provide written notice that such existing services may be Discontinued within fifteen (15) days following such notice, subject to the criteria described in Section 1.5.5.

1.5.5 BellSouth may take the action to Discontinue the provision of existing service upon fifteen (15) days from the day after BellSouth provides written notice of such Discontinuance if (a) such notice is sent by certified mail or overnight delivery; (b) Comcast Phone has not paid all amounts due pursuant to a subject bill(s), or has not provided adequate security pursuant to a deposit request; and (c) either:

(1) BellSouth has sent the subject bill(s) to Comcast Phone within (7) business days of the bill date(s), verifiable by records maintained by BellSouth:

i. in paper or CDROM form via the United States Postal Service (USPS), or
ii. in magnetic tape form via overnight delivery, or
iii. via electronic transmission; or

(2) BellSouth has sent the subject bill(s) to Comcast Phone, using one of the media described in (1) above, more than thirty (30) days before notice to Discontinue service has been rendered.

1.5.6 In the case of Discontinuance of services, all undisputed billed charges, as well as applicable disconnect charges, shall become due.

1.5.7 Comcast Phone is solely responsible for notifying the End User of the Discontinuance of service. If, within seven (7) days after Comcast Phone's services have been Discontinued, Comcast Phone pays, by wire transfer, automatic clearing house or cashier's check, all past due undisputed charges, including late

payment charges, outstanding security deposit request amounts if applicable and any applicable restoral charges as set forth in Section A4 of the GSST, then BellSouth will reestablish service for Comcast Phone.

1.5.7.1 Termination. If within seven (7) days after Comcast Phone's service has been Discontinued and Comcast Phone has failed to pay all past due charges as described above, then Comcast Phone's service will be Terminated.

1.6 Notices. Notwithstanding anything to the contrary in this Agreement, all bills and notices regarding billing matters, disconnection of services for nonpayment of charges, and rejection of additional orders from Comcast Phone, shall be forwarded to the individual and/or address provided by Comcast Phone in establishment of its billing account(s) with BellSouth, or to the individual and/or address subsequently provided by Comcast Phone as the contact for billing. All monthly bills and notices described in this Section shall be forwarded to the same individual and/or address; provided, however, upon written request from Comcast Phone to BellSouth's billing organization, the notice of discontinuance of services purchased by Comcast Phone under this Agreement provided for in Section 1.5.4 of this Attachment shall be sent via certified mail to the individual(s) listed in the Notices provision of the General Terms and Conditions of this Agreement.

## 2. BILLING DISPUTES

2.1 The Parties shall electronically submit all billing disputes to each other utilizing email or other electronic method upon agreement. The Parties will utilize BellSouth's RF-1461 form or another format mutually agreed upon. In the event of a billing dispute, the Parties will endeavor to resolve the dispute within sixty (60) days of the notification date. Within ten (10) business days of the billing Party's denial, or partial denial, of the billing dispute, if the billed Party is not satisfied with billing Party's resolution of the billing dispute or if no response to the billing dispute has been received by the billed Party by such sixtieth ($60^{th)}$ day, the billed Party will pursue the escalation process as outlined in Section 2.1.1.

2.1.1 If no dispute resolution has been received within sixty **(**60**)** days of the dispute notification date, the billed Party will contact the billing Party's designated first level of escalation. That first level of escalation will commit to resolve the dispute within an interval that is mutually agreed upon.

2.1.1.1 If the billed Party receives a dispute resolution, but is not satisfied with the billing Party's dispute resolution, the billed Party will initially contact the billing Party's representative who prepared the dispute response. After review of the dispute with that representative, if COMCAST is the billed Party and elects to pursue the dispute, they must utilize the Billing Dispute Escalation Matrix, set forth on BellSouth's Interconnection Services Web site. If BellSouth is the billed Party and elects to pursue the Dispute, they must utilize a Billing Dispute Escalation Matrix

to be provided electronically to BellSouth by COMCAST. The billed Party will escalate disputes within ten (10) days of denial or partial denial by the billing Party.

2.1.1.2 At each level of escalation, the Billing Party's designated escalation contact will commit to respond to the billed Party's escalation within an interval that is mutually agreeable. If that commitment is not met, or if the response from that level of escalation does not satisfy the billed Party, if the billed Party elects to pursue the dispute, they must immediately escalate to the billing Party's next highest level of escalation. If the billed Party does not elect to pursue the dispute by utilizing the escalation process, the billing Party's resolution will be considered as accepted by the billed Party and the dispute will be closed.

2.1.1.3 If after escalation, the Parties are unable to reach resolution, then the aggrieved Party, if it elects to pursue the dispute shall pursue dispute resolution in accordance with the General Terms and Conditions of this Agreement.

2.2 For purposes of this Section 2, a billing dispute means a reported dispute submitted pursuant to Section 2.1 of a specific amount of money actually billed by either Party. The billing dispute must be clearly explained by the disputing Party and supported by written documentation, which clearly shows the basis for disputing charges. Disputes that are not clearly explained or those that do not provide complete information may be rejected by the billing Party. Claims by the billed Party for damages of any kind will not be considered a billing dispute for purposes of this Section. If the billing dispute is resolved, in whole or in part, in favor of the billed Party, any credits and interest due to the billed Party as a result therof shall be applied to the billed Party's account by the billing Party upon resolution of the billing dispute. If the billing dispute is resolved, in whole or in part, in favor of the Billing Party, any monies withheld, including late payment charges, where applicable and interest, where applicable, will be paid promptly by the Billed Party.

## 3. REVENUE ACCOUNTING OFFICE (RAO) HOSTING

3.1 Centralized Message Distribution System (CMDS) is a national message exchange system administered by Telcordia Technologies ("Telcordia") used to transmit alternately billed calls (e.g., credit card, third number and collect) from the Earning Company, as defined herein, to the Billing Company, as defined herein, to permit the Earning Company and the Billing Company to receive appropriate compensation. It is also used to transmit access records from one company to another.

3.2 Direct Participants are Telecommunications carriers that exchange data directly with other Direct Participants via the CMDS Data Center and may act as host companies ("Host") for those Telecommunications carriers that do not exchange data directly via the CMDS Data Center ("Indirect Participants").

3.3 Revenue Accounting Office (RAO) Hosting is a hosting relationship where an Indirect Participant sends and receives CMDS eligible messages to and from its Host, who then interfaces, on behalf of the Indirect Participant, with other Direct Participants for distribution and collection of these messages. RAO Hosting also includes the Direct Participant's provision of revenue settlements functions (compensation) for alternately billed calls based upon reports generated by Credit Card and Third Number Settlement (CATS) and Non-InterCompany Settlement (NICS) as described herein. CATS and NICS are collectively referred to as Intercompany Settlements.

3.4 The CATS System is a national system administered by Telcordia, used to settle revenues for calls that are sent from one CMDS Direct Participant to another for billing. CATS applies to calls that originate within one Regional Bell Operating Company's (RBOC) territory, as defined at Divestiture, and bill in another RBOC's territory. CATS calculates the amounts due to Earning Companies (i.e. billed revenue less the billing and collection fee). For alternately billed calls, the originating company, whose facilities are used to place the call, is the Earning Company and the company that puts the charges on the End User's bill is the Billing Company

3.5 The Non-InterCompany Settlement (NICS) System is the national system administered by Telcordia that is used in the settlement of revenues for calls that are originated and billed by two different local exchange carriers (LEC) within a single Direct Participant's territory to another for billing. NICS applies to calls involving another LEC where the Earning Company and the Billing Company are located within BellSouth's territory.

3.6 RAO Hosting, CATS and NICS services provided to Comcast Phone by BellSouth will be in accordance with the methods and practices regularly applied by BellSouth to its own operations during the term of this Agreement, including such revisions as may be made from time to time by BellSouth.

3.7 Comcast Phone shall furnish all relevant information required by BellSouth for the provision of RAO Hosting, CATS and NICS.

3.8 Charges or credits, as applicable, will be applied by BellSouth to Comcast Phone on a monthly basis in arrears. Amounts due (excluding adjustments) are due on or before the next bill date.

3.9 Comcast Phone must have its own unique hosted RAO code. Where BellSouth is the selected CMDS interfacing host, Comcast Phone must request that BellSouth establish a unique hosted RAO code for Comcast Phone. Such request shall be in writing to the BellSouth RAO Hosting coordinator and must be submitted at least eight (8) weeks prior to provision of services pursuant to this Section. Services shall commence on a date mutually agreed by the Parties.

3.10 BellSouth will receive messages from Comcast Phone that are to be processed by BellSouth, another Local Exchange Carrier (LEC) in the BellSouth region or a LEC outside the BellSouth region. Comcast Phone shall send all messages to BellSouth no later than sixty (60) days after the message date.

3.11 BellSouth will perform invoice sequence checking, standard Exchange Message Interface (EMI) format editing, and balancing of message data with the EMI trailer record counts on all data received from Comcast Phone.

3.12 All data received from Comcast Phone that is to be processed or billed by another LEC within the BellSouth region will be distributed to that LEC in accordance with the Agreement(s) in effect between BellSouth and the involved LEC.

3.13 All data received from Comcast Phone that is to be placed on the CMDS network for distribution outside the BellSouth region will be handled in accordance with the agreement(s) in effect between BellSouth and its connecting contractor.

3.14 BellSouth will receive messages from the CMDS network that are destined to be processed by Comcast Phone and will forward them to Comcast Phone on a daily basis for processing.

3.15 Transmission of message data between BellSouth and Comcast Phone will be distributed via Secure File Transfer Protocol (FTP) mailbox. It will be created on a daily basis Monday through Friday, except holidays. Details such as dataset name and delivery schedule will be addressed during negotiations of the distribution medium. If BellSouth determines the Secure FTP Mailbox is nearing capacity levels, BellSouth may move Comcast Phone to CONNECT:Direct file delivery.

3.15.1 If Comcast Phone is moved to CONNECT:Direct, data circuits (private line or dial-up) may be required between BellSouth and Comcast Phone for the purpose of data transmission. Where a dedicated line is required, Comcast Phone will be responsible for ordering the circuit, overseeing its installation and coordinating the installation with BellSouth. Comcast Phone will also be responsible for any charges associated with this line. Equipment required on the BellSouth end to attach the line to the mainframe computer and to transmit successfully ongoing will be negotiated on an individual case basis. Where a dial-up facility is required, dial circuits will be installed in the BellSouth data center by BellSouth and the associated charges assessed to Comcast Phone. Additionally, all message toll charges associated with the use of the dial circuit by Comcast Phone will be the responsibility of Comcast Phone. Associated equipment on the BellSouth end, including a modem, will be negotiated on an individual case basis between the Parties. All equipment, including modems and software, that is required on the Comcast Phone end for the purpose of data transmission will be the responsibility of Comcast Phone.

3.15.2 If Comcast Phone utilizes Secure File Transfer Protocol for data file transmission, purchase of the Secure File Transfer Protocol software will be the responsibility of Comcast Phone.

3.16 All messages and related data exchanged between BellSouth and Comcast Phone will be EMI formatted records and packed between appropriate EMI header and trailer records in accordance with accepted industry standards.

3.17 Comcast Phone will maintain recorded message detail necessary to recreate files provided to BellSouth for a period of three (3) calendar months beyond the related message dates.

3.18 Should it become necessary for Comcast Phone to send data to BellSouth more than sixty (60) days past the message date(s), Comcast Phone will notify BellSouth in advance of the transmission of the data. BellSouth will work with its connecting contractor and/or Comcast Phone, where necessary, to notify all affected LECs.

3.19 In the event that data to be exchanged between the two Parties should become lost or destroyed, the Party responsible for creating the data will make every effort to restore and retransmit such data.

3.20 Should an error be detected by the EMI format edits performed by BellSouth on data received from Comcast Phone, the entire pack containing the affected data will not be processed by BellSouth. BellSouth will notify Comcast Phone of the error. Comcast Phone will correct the error(s) and will resend the entire pack to BellSouth for processing. In the event that an out-of-sequence condition occurs on subsequent packs, Comcast Phone will resend these packs to BellSouth after the pack containing the error has been successfully reprocessed by BellSouth.

3.21 In association with message distribution service, BellSouth will provide Comcast Phone with associated intercompany settlements reports (CATS and NICS) as appropriate.

3.22 Notwithstanding anything in this Agreement to the contrary, in no case shall either Party be liable to the other for any direct or consequential damages incurred as a result of the obligations set out in this Section 3.

3.23 Intercompany Settlements Messages

3.23.1 Intercompany Settlements Messages facilitate the settlement of revenues associated with traffic originated from or billed by Comcast Phone as a facilities based provider of local exchange telecommunications services.

3.23.2 BellSouth will receive the monthly NICS and CATS reports from Telcordia on behalf of Comcast Phone and will distribute copies of these reports to Comcast Phone on a monthly basis.

3.23.3 Through CATS, BellSouth will collect the revenue earned by Comcast Phone from the RBOC in whose territory the messages are billed, less a per message billing and collection fee of five cents ($0.05), or such other amount as may be approved by the Direct Participants and Telcordia, on behalf of Comcast Phone. BellSouth will remit the revenue billed by Comcast Phone to the RBOC in whose territory the messages originated, less a per message billing and collection fee of five cents ($0.05), or such other amount as may be approved by the Direct Participants and Telcordia, on behalf of Comcast Phone. These two amounts will be netted together by BellSouth and the resulting charge or credit issued to Comcast Phone via a Carrier Access Billing System (CABS) miscellaneous bill on a monthly basis in arrears.

3.23.4 Through NICS, BellSouth will collect the revenue earned by Comcast Phone within the BellSouth territory from another LEC also within the BellSouth territory (NICS) where the messages are billed, less a per message billing and collection fee of five cents ($0.05), on behalf of Comcast Phone. BellSouth will remit the revenue billed by Comcast Phone within the BellSouth region to the LEC also within the BellSouth region, where the messages originated, less a per message billing and collection fee of five cents ($0.05). These two amounts will be netted together by BellSouth and the resulting charge or credit issued to Comcast Phone via a CABS miscellaneous bill on a monthly basis in arrears.

3.23.5 BellSouth and Comcast Phone agree that monthly netted amounts of less than fifty dollars ($50.00) will not be settled.

3.24 Rates. Rates for Centralized Message Distribution System (CMDS) are set out in Exhibit A to this Attachment. If no rate is identified in this Attachment, the rate for the specific service or function will be as set forth in the applicable BellSouth tariff or as negotiated by the Parties upon request by either Party.

| CMDS - Alabama | | | | | | | | | | | | | | | Attachment: 7 Exh A | | | |
|---|---|---|---|---|---|---|---|---|---|---|---|---|---|---|---|---|---|---|
| CATEGORY | | RATE ELEMENTS | Interim | Zone | BCS | USOC | RATES($) | | | | | Svc Order Submitted Elec per LSR | Svc Order Submitted Manually per LSR | Incremental Charge - Manual Svc Order vs. Electronic-1st | Incremental Charge - Manual Svc Order vs. Electronic-Add'l | Incremental Charge - Manual Svc Order vs. Electronic-Disc 1st | Incremental Charge - Manual Svc Order vs. Electronic-Disc Add'l |
| | | | | | | | Rec | Nonrecurring | | Nonrecurring Disconnect | | OSS Rates($) | | | | | |
| | | | | | | | | First | Add'l | First | Add'l | SOMEC | SOMAN | SOMAN | SOMAN | SOMAN | SOMAN |
| | | | | | | | | | | | | | | | | | |
| CMDS | | | | | | | | | | | | | | | | | |
| | CENTRALIZED MESSAGE DISTRIBUTION SERVICE (CMDS) | | | | | | | | | | | | | | | | |
| | | CMDS: Message Processing, per message | | | | | 0.004 | | | | | | | | | | |
| | | CMDS: Data Transmission (CONNECT:DIRECT), per message | | | | | 0.001 | | | | | | | | | | |

| CMDS - Louisiana | | | | | | | | | | | | | | | Attachment: 7 Exh A | | | |
|---|---|---|---|---|---|---|---|---|---|---|---|---|---|---|---|---|---|---|
| CATEGORY | | RATE ELEMENTS | Interim | Zone | BCS | USOC | RATES($) | | | | | Svc Order Submitted Elec per LSR | Svc Order Submitted Manually per LSR | Incremental Charge - Manual Svc Order vs. Electronic-1st | Incremental Charge - Manual Svc Order vs. Electronic-Add'l | Incremental Charge - Manual Svc Order vs. Electronic-Disc 1st | Incremental Charge - Manual Svc Order vs. Electronic-Disc Add'l |
| | | | | | | | Rec | Nonrecurring | | Nonrecurring Disconnect | | OSS Rates($) | | | | | |
| | | | | | | | | First | Add'l | First | Add'l | SOMEC | SOMAN | SOMAN | SOMAN | SOMAN | SOMAN |
| | | | | | | | | | | | | | | | | | |
| CMDS | | | | | | | | | | | | | | | | | |
| | CENTRALIZED MESSAGE DISTRIBUTION SERVICE (CMDS) | | | | | | | | | | | | | | | | |
| | | CMDS: Message Processing, per message | | | | | 0.004 | | | | | | | | | | |
| | | CMDS: Data Transmission (CONNECT:DIRECT), per message | | | | | 0.001 | | | | | | | | | | |

| CMDS - Mississippi | | | | | | | | | | | | | | Attachment: 7 Exh A | | | |
|---|---|---|---|---|---|---|---|---|---|---|---|---|---|---|---|---|---|
| CATEGORY | | RATE ELEMENTS | Interim | Zone | BCS | USOC | RATES($) | | | | | Svc Order Submitted Elec per LSR | Svc Order Submitted Manually per LSR | Incremental Charge - Manual Svc Order vs. Electronic-1st | Incremental Charge - Manual Svc Order vs. Electronic-Add'l | Incremental Charge - Manual Svc Order vs. Electronic-Disc 1st | Incremental Charge - Manual Svc Order vs. Electronic-Disc Add'l |
| | | | | | | | Rec | Nonrecurring | | Nonrecurring Disconnect | | OSS Rates($) | | | | | |
| | | | | | | | | First | Add'l | First | Add'l | SOMEC | SOMAN | SOMAN | SOMAN | SOMAN | SOMAN |
| | | | | | | | | | | | | | | | | | |
| CMDS | | | | | | | | | | | | | | | | | |
| | CENTRALIZED MESSAGE DISTRIBUTION SERVICE (CMDS) | | | | | | | | | | | | | | | | |
| | | CMDS: Message Processing, per message | | | | | 0.004 | | | | | | | | | | |
| | | CMDS: Data Transmission (CONNECT:DIRECT), per message | | | | | 0.001 | | | | | | | | | | |

| CMDS - North Carolina | | | | | | | | | | | | | | | Attachment: 7 Exh A | | | |
|---|---|---|---|---|---|---|---|---|---|---|---|---|---|---|---|---|---|---|
| CATEGORY | | RATE ELEMENTS | Interim | Zone | BCS | USOC | RATES($) | | | | | Svc Order Submitted Elec per LSR | Svc Order Submitted Manually per LSR | Incremental Charge - Manual Svc Order vs. Electronic-1st | Incremental Charge - Manual Svc Order vs. Electronic-Add'l | Incremental Charge - Manual Svc Order vs. Electronic-Disc 1st | Incremental Charge - Manual Svc Order vs. Electronic-Disc Add'l |
| | | | | | | | Rec | Nonrecurring | | Nonrecurring Disconnect | | OSS Rates($) | | | | | |
| | | | | | | | | First | Add'l | First | Add'l | SOMEC | SOMAN | SOMAN | SOMAN | SOMAN | SOMAN |
| | | | | | | | | | | | | | | | | | |
| CMDS | | | | | | | | | | | | | | | | | |
| | CENTRALIZED MESSAGE DISTRIBUTION SERVICE (CMDS) | | | | | | | | | | | | | | | | |
| | | CMDS: Message Processing, per message | | | | | 0.004 | | | | | | | | | | |
| | | CMDS: Data Transmission (CONNECT:DIRECT), per message | | | | | 0.001 | | | | | | | | | | |

| CMDS - South Carolina | | | | | | | | | | | | | | | Attachment: 7 Exh A | | | |
|---|---|---|---|---|---|---|---|---|---|---|---|---|---|---|---|---|---|---|
| CATEGORY | | RATE ELEMENTS | Interim | Zone | BCS | USOC | RATES($) | | | | | Svc Order Submitted Elec per LSR | Svc Order Submitted Manually per LSR | Incremental Charge - Manual Svc Order vs. Electronic-1st | Incremental Charge - Manual Svc Order vs. Electronic-Add'l | Incremental Charge - Manual Svc Order vs. Electronic-Disc 1st | Incremental Charge - Manual Svc Order vs. Electronic-Disc Add'l |
| | | | | | | | Rec | Nonrecurring | | Nonrecurring Disconnect | | OSS Rates($) | | | | | |
| | | | | | | | | First | Add'l | First | Add'l | SOMEC | SOMAN | SOMAN | SOMAN | SOMAN | SOMAN |
| | | | | | | | | | | | | | | | | | |
| CMDS | | | | | | | | | | | | | | | | | |
| | CENTRALIZED MESSAGE DISTRIBUTION SERVICE (CMDS) | | | | | | | | | | | | | | | | |
| | | CMDS: Message Processing, per message | | | | | 0.004 | | | | | | | | | | |
| | | CMDS: Data Transmission (CONNECT:DIRECT), per message | | | | | 0.001 | | | | | | | | | | |

| CMDS - Tennessee | | | | | | | | | | | | | | Attachment: 7 Exh A | | | |
|---|---|---|---|---|---|---|---|---|---|---|---|---|---|---|---|---|---|
| CATEGORY | | RATE ELEMENTS | Interim | Zone | BCS | USOC | RATES($) | | | | | Svc Order Submitted Elec per LSR | Svc Order Submitted Manually per LSR | Incremental Charge - Manual Svc Order vs. Electronic-1st | Incremental Charge - Manual Svc Order vs. Electronic-Add'l | Incremental Charge - Manual Svc Order vs. Electronic-Disc 1st | Incremental Charge - Manual Svc Order vs. Electronic-Disc Add'l |
| | | | | | | | Rec | Nonrecurring | | Nonrecurring Disconnect | | OSS Rates($) | | | | | |
| | | | | | | | | First | Add'l | First | Add'l | SOMEC | SOMAN | SOMAN | SOMAN | SOMAN | SOMAN |
| | | | | | | | | | | | | | | | | | |
| CMDS | | | | | | | | | | | | | | | | | |
| | CENTRALIZED MESSAGE DISTRIBUTION SERVICE (CMDS) | | | | | | | | | | | | | | | | |
| | | CMDS: Message Processing, per message | | | | | 0.004 | | | | | | | | | | |
| | | CMDS: Data Transmission (CONNECT:DIRECT), per message | | | | | 0.001 | | | | | | | | | | |

# Attachment 8

# Rights-of-Way, Conduits and Pole Attachments

# Rights-of-Way, Conduits and Pole Attachments

BellSouth will provide nondiscriminatory access to any pole, duct, conduit, or right-of-way owned or controlled by BellSouth pursuant to 47 U.S.C. § 224, as amended by the Act, pursuant to terms and conditions of a separate license agreement negotiated with BellSouth.

BELLSOUTH®

# BellSouth Service Quality Measurement Plan (SQM)

## Tennessee Performance Metrics

## Measurement Descriptions
## Version 2.00

## Issue Date: July 1, 2003

## Introduction

The BellSouth Service Quality Measurement Plan (SQM) describes in detail the measurements produced to evaluate the quality of service delivered to BellSouth's customers both wholesale and retail. The SQM was developed to respond to the requirements of the Communications Act of 1996 Section 251 (96 Act) which required BellSouth to provide non-discriminatory access to Competitive Local Exchange Carriers (CLEC)[1] and their Retail Customers. The reports produced by the SQM provide regulators, CLECs and BellSouth the information necessary to monitor the delivery of non-discriminatory access.

This plan results from the many divergent forces evolving from the 96 Act. The 96 Act, the Georgia Public Service Commission (GPSC) Order (Docket 7892-U 12/30/97), LCUG 1-7.0, the FCC's NPRM (CC Docket 98-56 RM9101 04/17/98), the Louisiana Public Service Commission (LPSC) Order (Docket U-22252 Subdocket C 04/19/98), numerous arbitration cases, LPSC sponsored collaborative workshops (10/98-02/00), and proceedings in Alabama, Florida, Mississippi, and North Carolina have and continue to influence the SQM. Per the Order in Docket 01-00193, issued by the Tennessee Regulatory Authority on October 4, 2002, this version of the SQM reflects the Florida Public Service Commission Order Nos. PSC-02-1736-PAA-TP, issued December 10, 2002, PSC-03-0529-PAA-TP, issued April 22, 2003 and PSC-03-0603-CO-TP, issued May 15, 2003.

The SQM and the reports flowing from it must change to reflect the dynamic requirements of the industry. New measurements are added as new products, systems, and processes are developed and fielded. New products and services are added as the markets for them develop and the processes stabilize. The measurements are also changed to reflect changes in systems, correct errors, and respond to both 3rd Party audit requirements and the Florida PSC.

This document is intended for use by someone with knowledge of the telecommunications industry, information technologies and a functional knowledge of the subject areas covered by the BellSouth Performance Measurements and the reports that flow from them.

Once it is approved, the most current copy of this document can be found on the web at URL: http://pmap.bellsouth.com in the Documentation/Exhibits folder.

## Report Publication Dates

Each month, preliminary SQM reports will be posted to BellSouth's SQM web site (http://pmap.bellsouth.com) by 8:00 A.M. EST on the 21st day of each month or the first business day after the 21st. The validated SQM reports will be posted by 8:00 A.M. on the last day of the month. Reports not posted by this time will be considered late for SEEM payment purposes. Validated SEEM reports will be posted on the 15th of the following month. SEEM payments due will also be paid on the

[1] *Alternative Local Exchange Companies (ALEC) and Competing Local Providers (CLP) are referred to as Competitive Local Exchange Carriers (CLEC) in this document.*

15th of the following month. For instance: May data will be posted in preliminary SQM reports on June 21. Final validated SQM reports will be posted on the last day of the month. Final validated SEEM reports will be posted and payments mailed on the 15th of the following month. BellSouth shall retain the performance measurement raw data files for a period of 18 months and further retain the monthly reports produced in PMAP for a period of three years.

## Report Delivery Methods

CLEC SQM and SEEM reports will be considered delivered when posted to the web site. The Tennessee Regulatory Authority has access to the web site. In addition, a copy of the SQM and Monthly State Summary reports will be filed with the TRA as soon as possible after the last day of each month.

# Contents

## Section 1: Operations Support Systems (OSS)

OSS-1: Average Response Interval and Percent within Interval (Pre-Ordering/Ordering) ..... 4
OSS-2: OSS Availability (Pre-Ordering/Ordering) ..... 7
OSS-3: OSS Availability (Maintenance & Repair) ..... 9
OSS-4: Response Interval (Maintenance & Repair) ..... 11
PO-1: Loop Makeup - Response Time – Manual ..... 13
PO-2: Loop Makeup - Response Time - Electronic ..... 15

## Section 2: Ordering

O-1: Acknowledgement Message Timeliness ..... 17
O-2: Acknowledgement Message Completeness ..... 19
O-3: Percent Flow-Through Service Requests (Summary) ..... 21
O-4: Percent Flow-Through Service Requests (Detail) ..... 24
Flow-Through Error Analysis ..... 27
O-6: CLEC LSR Information ..... 29
O-7: Percent Rejected Service Requests ..... 31
O-8: Reject Interval ..... 34
O-9: Firm Order Confirmation Timeliness ..... 38
O-10: Service Inquiry with LSR Firm Order Confirmation (FOC) Response Time Manual ..... 42
O-11: Firm Order Confirmation and Reject Response Completeness ..... 44
O-12: Speed of Answer in Ordering Center ..... 46

## Section 3: Provisioning

P-1: Mean Held Order Interval & Distribution Intervals ..... 48
P-2: (Deleted) Average Jeopardy Notice Interval & Percentage of Orders Given Jeopardy Notices ..... 51
P-2A: Jeopardy Notice Interval ..... 52
P-2B: Percentage of Orders Given Jeopardy Notices ..... 54
P-3: Percent Missed Initial Installation Appointments ..... 57
P-3A: (Deleted) Percent Missed Installation Appointments Including Subsequent Appointment ..... 60
P-4: Average Completion Interval (OCI) & Order Completion Interval Distribution ..... 61
P-4A: (Deleted) Average Order Completion Interval (OCI) & Order Completion Interval Distribution ..... 64
P-5: Average Completion Notice Interval ..... 65
P-6: % Completions/Attempts without Notice or < 24 hours Notice ..... 68
P-7: Coordinated Customer Conversions Interval ..... 70
P-7A: Coordinated Customer Conversions – Hot Cut Timeliness% within Interval and Average Interval ..... 72
P-7B: Coordinated Customer Conversions – Average Recovery Time ..... 75
P-7C: Hot Cut Conversions - % Provisioning Troubles Received within 7 Days of a Completed Service Order ..... 77
P-8: Cooperative Acceptance Testing - % of xDSL Loops Successfully Passing Cooperative Testing ..... 79
P-9: % Provisioning Troubles within 30 Days of Service Order Completion ..... 81
P-10: (Deleted) Total Service Order Cycle Time (TSOCT) ..... 84
P-11: Service Order Accuracy ..... 85
P-11A: Service Order Accuracy ..... 87
P-12: (Deleted) LNP-Average Disconnect Timeliness Interval & Disconnect Timeliness Interval Distribution ..... 90
P-13B: LNP-Percent Out of Service < 60 Minutes ..... 91
P-13C: LNP-Percentage of Time BellSouth Applies the 10-Digit Trigger Prior to the LNP Order Due Date ..... 93
P-13D: LNP-Average Disconnect Timeliness Interval Distribution (Non-Trigger) ..... 95

## Section 4: Maintenance & Repair

M&R-1: Missed Repair Appointments ..... 97
M&R-2: Customer Trouble Report Rate ..... 100
M&R-3: Maintenance Average Duration ..... 103
M&R-4: Percent Repeat Troubles within 30 Days ..... 106

M&R-5: Out of Service (OOS) > 24 Hours ..... 109
M&R-6: Average Answer Time – Repair Centers ..... 112
M&R-7: Mean Time To Notify CLEC of Network Outages ..... 114

## Section 5: Billing

B-1: Invoice Accuracy ..... 116
B-2: Mean Time to Deliver Invoices ..... 118
B-3: Usage Data Delivery Accuracy ..... 120
B-4: Usage Data Delivery Completeness ..... 122
B-5: Usage Data Delivery Timeliness ..... 124
B-6: Mean Time to Deliver Usage ..... 126
B-7: Recurring Charge Completeness ..... 128
B-8: Non-Recurring Charge Completeness ..... 130
B-9: Percent Daily Usage Feed Errors Corrected in "X" Business Days ..... 132
B-10: Percent Billing Errors Corrected in "X" Business Days ..... 134

## Section 6: Operator Services and Directory Assistance

OS-1: Speed to Answer Performance/Average Speed to Answer - Toll ..... 136
OS-2: Speed to Answer Performance/Percent Answered within "X" Seconds – Toll ..... 138
DA-1: Speed to Answer Performance/Average Speed to Answer – Directory Assistance (DA) ..... 140
DA-2: Speed to Answer Performance/Percent Answered within "X" Seconds – Directory Assistance (DA) ..... 142

## Section 7: Database Update Information

D-1: Average Database Update Interval ..... 144
D-2: Percent Database Update Accuracy ..... 146
D-3: Percent NXXs and LRNs Loaded by the LERG Effective Date ..... 148

## Section 8: E911

E-1: Timeliness ..... 150
E-2: Accuracy ..... 152
E-3: Mean Interval ..... 153

## Section 9: Trunk Group Performance

TGP-1: Trunk Group Performance-Aggregate ..... 155
TGP-2: Trunk Group Performance-CLEC Specific ..... 158

## Section 10: Collocation

C-1: Collocation Average Response Time ..... 161
C-2: Collocation Average Arrangement Time ..... 163
C-3: Collocation Percent of Due Dates Missed ..... 165

## Section 11: Change Management

CM-1: Timeliness of Change Management Notices ..... 167
CM-2: Change Management Notice Average Delay Days ..... 169
CM-3: Timeliness of Documents Associated with Change ..... 171
CM-4: Change Management Documentation Average Delay Days ..... 173
CM-5: Notification of CLEC Interface Outages ..... 175
CM-6: Percent of Software Errors Corrected in "X" (10, 30, 45) Business Days ..... 177
CM-7: Percent of Change Requests Accepted or Rejected within 10 Days ..... 179
CM-8: Percent Change Requests Rejected ..... 180
CM-9: Number of Defects in Production Releases (Type 6 CR) ..... 182
CM-10: Software Validations ..... 184
CM-11: Percent of Change Requests Implemented within 60 Weeks of Prioritization ..... 186

**Appendix A: Reporting Scope**
A-1: Standard Service Groupings....188
A-2: Standard Service Order Activities .... 188

**Appendix B: Glossary of Acronyms and Terms**
....189

**Appendix C: BellSouth Audit Policy**
C-1: BellSouth's Internal Audit Policy....199
C-2: BellSouth's External Audit Policy....199

**Appendix D: OSS Tables**
....200

**Appendix E: Flow-Through Matrix**
....205

# Section 1: Operations Support Systems (OSS)

## OSS-1: Average Response Interval and Percent within Interval (Pre-Ordering/Ordering)



### Definition

The average response interval and percent within the Interval is the average times and percent of requests responded to within certain intervals for accessing legacy data associated with appointment scheduling, service and feature availability, address verification, request for Telephone numbers (TNs), and Customer Service Records (CSRs).

### Exclusions

- Syntactically incorrect queries
- Scheduled OSS Maintenance
- Retail usage of LENS

### Business Rules

The average response interval for retrieving pre-order/order information from a given legacy system is determined by summing the response times for all requests submitted to the legacy systems during the reporting period and dividing by the total number of legacy system requests for that month.

The response interval starts when the application (LENS or TAG for CLECs and RNS or ROS for BellSouth) submits a request to the legacy system and ends when the appropriate response is received by the client application. The percent of accesses to the legacy systems during the reporting period which take less than 2.3 seconds, the percent of accesses which take more than 6 seconds, and the percent which are less than or equal to 6.3 seconds are also captured. BellSouth will not schedule maintenance during the hours from 8:00 a.m. until 9:00 p.m., Monday through Friday.

### Calculation

**Response Interval** = (a - b)

- a = Date and Time of Legacy Response
- b = Date and Time of Legacy Request

**Average Response Interval** = c / d

- c = Sum of Response Intervals
- d = Number of Legacy Requests During the Reporting Period

**Percent within Interval** = (e / f) X 100

- e = Count of requests within the designated Interval within the reporting period.
- f = Number of Legacy Requests during the Reporting Period for System for which a response was provided.

### Report Structure

- Interface Type
- Not CLEC Specific
- Not Product/Service Specific
- Regional Level

## Data Retained

### Relating to CLEC Experience

- Report Month
- Legacy Contract (per reporting dimension)
- Response Interval
- Regional Scope

### Relating to BellSouth Performance

- Report Month
- Legacy Contract (per reporting dimension)
- Response Interval
- Regional Scope

## SQM Disaggregation - Analog/Benchmark

### SQM Level of Disaggregation

- **RSAG – Address** (Regional Street Address Guide-Address) – stores street address information used to validate customer addresses. CLECs and BellSouth query this legacy system.
- **RSAG – TN** (Regional Street Address Guide-Telephone number) – contains information about facilities available and telephone numbers working at a given address. CLECs and BellSouth query this legacy system.
- **ATLAS** (Application for Telephone Number Load Administration and Selection) – acts as a warehouse for storing telephone numbers that are available for assignment by the system. It enables CLECs and BellSouth service reps to select and reserve telephone numbers. CLECs and BellSouth query this legacy system.
- **COFFI** (Central Office Feature File Interface) – stores information about product and service offerings and availability. CLECs query this legacy system.
- **DSAP** (DOE Support Application) – provides due date information. CLECs and BellSouth query this legacy system.
- **CRIS** (Customer Record Information System) – Source of CSR (Customer Service Record) information. Contains information about individual customers including listings, addresses, features, services, etc. CLECs and BellSouth can query for CSR information.
- **P/SIMS** (Product/Services Inventory Management system) – provides information on capacity, tariffs, inventory and service availability. CLECs query this legacy system.
- **OASIS** (Obtain Available Services Information Systems) – Information on feature and rate availability. BellSouth queries this legacy system.

### SQM Analog/Benchmark

- Parity + 2 seconds

(See Appendix D: Tables for **SQM OSS** Legacy Access Times)

## SEEM Measure

| SEEM | Tier I | Tier II | Tier III |
|---|---|---|---|
| Yes | ..... | ..... X | ..... |

## SEEM Disaggregation - Analog/Benchmark

### SEEM Disaggregation

- **RSAG – Address** (Regional Street Address Guide-Address) – stores street address information used to validate customer addresses. CLECs and BellSouth query this legacy system.
- **RSAG – TN** (Regional Street Address Guide-Telephone number) – contains information about facilities available and telephone numbers working at a given address. CLECs and BellSouth query this legacy system.
- **ATLAS** (Application for Telephone Number Load Administration and Selection) – acts as a warehouse for storing telephone numbers that are available for assignment by the system. It enables CLECs and BellSouth service reps to select and reserve

telephone numbers. CLECs and BellSouth query this legacy system.

- **COFFI** (Central Office Feature File Interface) – stores information about product and service offerings and availability. CLECs query this legacy system.
- **DSAP** (DOE Support Application) – provides due date information. CLECs and BellSouth query this legacy system.
- **CRIS** (Customer Record Information System) – Source of CSR (Customer Service Record) information. Contains information about individual customers including listings, addresses, features, services, etc. CLECs and BellSouth can query for CSR information.
- **P/SIMS** (Product/Services Inventory Management system) – provides information on capacity, tariffs, inventory and service availability. CLECs query this legacy system.
- **OASIS** (Obtain Available Services Information Systems) – Information on feature and rate availability. BellSouth queries this legacy system.

**SEEM Analog/Benchmark**

- Parity + 2 Seconds

**(See Appendix D: Tables for SEEM OSS Legacy Systems)**

# OSS-2: OSS Availability (Pre-Ordering/Ordering)

## Definition

Percent of time OSS interface is functionally available compared to scheduled availability. Availability percentages for CLEC interface and for all Legacy systems accessed by them are captured. ("Functional Availability" is the amount of time in hours during the reporting period that the legacy systems are available to users. The planned System Scheduled Availability is the time in hours per day that the legacy system is scheduled to be available.)

Scheduled availability is posted on the Interconnection website: (www.interconnection.bellsouth.com/oss/osshour.html)

## Exclusions

- CLEC impacting troubles caused by factors outside of BellSouth's purview, e.g., troubles in customer equipment, troubles in networks owned by telecommunications companies other than BellSouth, etc.
- Degraded service outages which are defined as a critical function that is normally performed by the CLEC or is normally provided by an application or system available to the CLEC, but with significantly reduced response or processing time.
- Scheduled OSS Maintenance

## Business Rules

This measurement captures the functional availability of applications/interfaces as a percentage of scheduled availability for the same systems. Only full and Loss of Functionality outages are included in the calculation for this measure. Full outages are defined as occurrences of either of the following:

- Application/Interface application is down or totally inoperative.
- Application is totally inoperative for customers attempting to access or use the application. This includes transport outages when they may be directly associated with a specific application.
- Loss of Functionality outages are defined as:
  - A critical function that is normally performed by the CLEC or is normally provided by an application or system is temporarily unavailable to the CLEC.

Comparison to an internal benchmark provides a vehicle for determining whether or not CLECs and retail BellSouth entities are given comparable opportunities for use of pre-ordering and ordering systems.

(Note: Scheduled maintenance will not be performed between the hours of 8:00 a.m through 9:00 p.m. Monday through Friday.)

## Calculation

**OSS Availability (Pre-Ordering/Ordering)** = (a / b) X 100

- a = Functional Availability
- b = Scheduled Availability

## Report Structure

- Interface Type
- Not CLEC Specific
- Not Product/Service Specific
- Regional Level

## Data Retained

### Relating to CLEC Experience

- Report Month
- Legacy Contract Type (per reporting dimension)
- Regional Scope
- Hours of Downtime

### Relating to BellSouth Performance

- Report Month
- Legacy Contract Type (per reporting dimension)
- Regional Scope
- Hours of Downtime

## SQM Disaggregation - Analog/Benchmark

| SQM Level of Disaggregation | SQM Analog/Benchmark |
|---|---|
| • Regional Level, Per OSS Interface | >= 99.5% |

(See Appendix D: Tables for SQM OSS Availability)

## SEEM Measure

| SEEM | Tier I | Tier II |
|---|---|---|
| Yes | | X |

## SEEM Disaggregation - Analog/Benchmark

| SEEM Disaggregation | SEEM Analog/Benchmark |
|---|---|
| • Regional Level, Per OSS Interface | >= 99.5% |

(See Appendix D: Tables for SEEM OSS Availability)

# OSS-3: OSS Availability (Maintenance & Repair)

## Definition

Percent of time applications are functionally available as compared to scheduled availability. Calculations are based upon availability of applications and interfacing applications utilized by CLECs for maintenance and repair. "Functional Availability" is defined as the number of hours in the reporting period that the applications/interfaces are available to users. "Scheduled Availability" is defined as the number of hours in the reporting period that the applications/interfaces are scheduled to be available.

Scheduled availability is posted on the Interconnection website: (www.interconnection.bellsouth.com/oss/osshour.html)

## Exclusions

- CLEC-impacting trouble caused by factors outside of BellSouth's purview, e.g., troubles in customer equipment, troubles in networks owned by telecommunications companies other than BellSouth, etc.
- Degraded service outages which are defined as a critical function that is normally performed by the CLEC or is normally provided by an application or system available to the CLEC, but with significantly reduced response or processing time.

## Business Rules

This measurement captures the functional availability of applications/interfaces as a percentage of scheduled availability for the same systems. Only full outages are included in the calculations for this measure. Full outages are defined as occurrences of either of the following:

- Application/interfacing application is down or totally inoperative.
- Application is totally inoperative for customers attempting to access or use the application. This includes transport outages when they may be directly associated with a specific application.

Loss of Functionality outages are defined as:

- A critical function that is normally performed by the CLEC or is normally provided by an application or system is temporarily unavailable to the CLEC.

Comparison to an internal benchmark provides a vehicle for determining whether or not CLECs and retail BellSouth entities are given comparable opportunities for use of maintenance and repair systems.

## Calculation

**OSS Availability** (a / b) X 100

- a = Functional Availability
- b = Scheduled Availability

## Report Structure

- Interface Type
- Not CLEC Specific
- Not Product/Service Specific
- Regional Level

## Data Retained

### Relating to CLEC Experience

- Availability of CLEC TAFI
- Availability of LMOS HOST, MARCH, SOCS, CRIS, PREDICTOR, LNP and OSPCM

- ECTA

**Relating to BellSouth Performance**

- Availability of BellSouth TAFI
- Availability of LMOS HOST, MARCH, SOCS, CRIS, PREDICTOR, LNP and OSPCM

## SQM Disaggregation - Analog/Benchmark

| SQM Level of Disaggregation | SQM Analog/Benchmark |
|---|---|
| • Regional Level, Per OSS Interface | >= 99.5% |

(See Appendix D: Tables for OSS Availability (M&R)

## SEEM Measure

| SEEM | Tier I | Tier II |
|---|---|---|
| Yes | | X |

## SEEM Disaggregation - Analog/Benchmark

| SEEM Disaggregation | SEEM Analog/Benchmark |
|---|---|
| • Regional Level, Per OSS Interface | >= 99.5% |

(See Appendix D: Tables for SEEM OSS Availability (M&R)

# OSS-4: Response Interval (Maintenance & Repair)

## Definition

The response intervals are determined by subtracting the time a request is received on the BellSouth side of the interface from the time the response is received from the legacy system. Percentages of requests falling into each interval category are reported, along with the actual number of requests falling into those categories.

## Exclusions

None

## Business Rules

This measure is designed to monitor the time required for the CLEC and BellSouth interface system to obtain from BellSouth's legacy systems the information required to handle maintenance and repair functions. The clock starts on the date and time when the request is received on the BellSouth side of the interface and the clock stops when the response has been transmitted through that same point to the requester.

**Note:** The OSS Response Interval BellSouth Total Report is a combination of BellSouth Residence and Business Total.

## Calculation

**OSS Response Interval** = (a - b)

- a = Query Response Date and Time
- b = Query Request Date and Time

**Percent Response Interval** (per category) = (c / d) X 100

- c = Number of Response Intervals in category "X"
- d = Number of Queries Submitted in the Reporting Period

where, "X" is <= 4, > 4 <= 10, <= 10, > 10, or > 30 seconds.

**Average Interval** = (e / f)

- e = Sum of Response Intervals
- f = Number of Queries Submitted in the Reporting Period

## Report Structure

- Not CLEC Specific
- Not Product/Service Specific
- Regional Level

## Data Retained

### Relating to CLEC Experience

- CLEC Transaction Intervals

### Relating to BellSouth Performance

- BellSouth Business and Residential Transactions Intervals

## SQM Disaggregation - Analog/Benchmark

| SQM Level of Disaggregation | SQM Analog/Benchmark |
|---|---|
| • Regional Level, Per OSS Interface | Parity with Retail |

(See Appendix D: Tables for Legacy System Access Times for M&R)

**Note:** BellSouth's Appendix D lists the query functions and the appropriate legacy systems that the queries travel through to return a response.

## SEEM Measure

| SEEM | Tier I | Tier II |
|---|---|---|
| Yes | | X |

## SEEM Disaggregation - Analog/Benchmark

| SEEM Disaggregation | SEEM Analog/Benchmark |
|---|---|
| • Region Level, Per OSS Interface | Parity with Retail |

# PO-1: Loop Makeup - Response Time – Manual

## Definition

This report measures the average interval and percent within the interval from the submission of a Manual Loop Makeup Service Inquiry (LMUSI) to the distribution of Loop Makeup information back to the CLEC.

## Exclusions

- Inquiries, which are submitted electronically
- Designated Holidays are excluded from the interval calculation
- Weekends are excluded from the interval calculation
- Canceled Inquiries

## Business Rules

The CLEC Manual Loop Makeup Service Inquiry (LMUSI) process includes inquiries submitted via E-mail or FAX to BellSouth's Complex Resale Support Group (CRSG)

This measurement combines three intervals:

1. From receipt of a valid Service Inquiry for Loop Makeup to hand off to the Service Advocacy Center (SAC) for "Look-up."
2. From SAC start date to SAC complete date
3. From SAC complete date to date the Complex Resale Support Group (CRSG) distributes loop makeup information back to the CLEC.

The "Receive Date" is defined as the date the Manual LMUSI is received by the CRSG. It is counted as day Zero. LMU "Return Date" is defined as the date the LMU information is sent back to the CLEC from BellSouth. The interval calculation is reset to Zero when a CLEC initiated change occurs on the Manual LMU request.

**Note**: The Loop Makeup Service Inquiry Form does not require the CLEC to furnish the type of Loop. The CLEC determines whether the loop makeup will support the type of service they wish to order or not and qualifies the loop. If the loop makeup will support the service, a firm order LSR is submitted by the CLEC.

(A valid Service Inquiry is an inquiry that has all required fields populated correctly and has not been returned for clarification.)

## Calculation

**Response Interval** = (a - b)

- a = Date the LMUSI returned to CLEC
- b = Date the LMUSI is received

**Average Interval** = (c / d)

- c = Sum of all Response Intervals
- d = Total Number of LMUSIs received within the reporting period

**Percent within interval** = (e / f) X 100

- e = Total LMUSIs received within the interval
- f = Total Number of LMUSIs processed within the reporting period

## Report Structure

- CLEC Aggregate
- CLEC Specific
- Geographic Scope
  - State
  - Region
- Interval for manual LMUs:
  0 – <=1 day
  >1 – <= 2 days
  >2 – <= 3 days
  0 - <= 3 days
  >3 – <= 6 days
  >6 – <= 10 days
  > 10 days
- Average Interval in days

## Data Retained

### Relating to CLEC Experience

- Report Month
- Total Number of Inquiries
- SI Intervals
- State and Region

### Relating to BellSouth Performance

## SQM Disaggregation - Analog/Benchmark

| SQM Level of Disaggregation | SQM Analog/Benchmark |
|---|---|
| • Loops | Benchmark: 95% <= 3 Business Days |

## SEEM Measure

| SEEM | Tier I | Tier II |
|---|---|---|
| Yes | X | X |

## SEEM Disaggregation - Analog/Benchmark

| SEEM Disaggregation | SEEM Analog/Benchmark |
|---|---|
| • Loops | Benchmark: 95% <= 3 Business Days |

# PO-2: Loop Makeup - Response Time - Electronic

## Definition

This report measures the average interval and the percent within the interval from the electronic submission of a Loop Makeup Service Inquiry (LMUSI) to the distribution of Loop Makeup information back to the CLEC.

## Exclusions

- Manually submitted inquiries
- Canceled Requests

## Business Rules

The response interval starts when the CLEC's Mechanized Loop Makeup Service Inquiry (LMUSI) is submitted electronically through the Operational Support Systems interface, TAG. It ends when BellSouth's Loop Facility Assignment and Control System (LFACS) responds electronically to the CLEC with the requested Loop Makeup data via the TAG Interface. LSRs submitted via LENs will be reflected in the results for the TAG interface.

> **Note**: The Loop Makeup Service Inquiry Form does not require the CLEC to furnish the type of Loop. The CLEC determines whether the loop makeup will support the type of service they wish to order or not and qualifies the loop. If the loop makeup will support the service, a firm order LSR is submitted by the CLEC. EDI is not a pre-ordering system, and, therefore, is not applicable in this measure.

## Calculation

**Response Interval** = (a - b)

- a = Date and Time the LMUSI returned to CLEC
- b = Date and Time the LMUSI is received

**Average Interval** = (c / d)

- c = Sum of all response intervals
- d = Total Number of LMUSIs received within the reporting period

**Percent within interval** = (e / f) X 100

- e = Total LMUSIs received within the interval
- f = Total Number of LMUSIs processed within the reporting period

## Report Structure

- CLEC Aggregate
- CLEC Specific
- Geographic Scope
  - State
  - Region
- Interval for electronic LMUs:
  0 – <= 1 minute
  >1 – <= 5 minutes
  0 - <= 5 minutes
  > 5 – <= 8 minutes
  > 8 – <= 15 minutes

> 15 minutes
- Average Interval in minutes

## Data Retained

### Relating to CLEC Experience

- Report Month
- Total Number of Inquires
- SI Interval
- State and Region

### Relating to BellSouth Performance

- Not Applicable

## SQM Disaggregation - Analog/Benchmark

| SQM Level of Disaggregation | SQM Analog/Benchmark |
|---|---|
| • Loop | Benchmark: 95% <= 1 Minute |

## SEEM Measure

| SEEM | Tier I | Tier II |
|---|---|---|
| Yes | X | X |

## SEEM Disaggregation - Analog/Benchmark

| SEEM Disaggregation | SEEM Analog/Benchmark |
|---|---|
| • Loop | 95% <= 1 Minute |

# Section 2: Ordering

## O-1: Acknowledgement Message Timeliness



### Definition

This measurement provides the response interval and percent within the interval from the time an LSR or transmission (may contain multiple LSRs from one or more CLECs in multiple states) is electronically submitted via EDI or TAG until an acknowledgement notice is sent by the system.

### Exclusions

- Scheduled OSS Maintenance
- Manually Submitted LSRs

### Business Rules

The process includes EDI and TAG system functional acknowledgements for all Local Service Requests (LSRs) which are electronically submitted by the CLEC. The start time is the receipt time of the LSR at BellSouth's side of the interface (gateway). The end time is when the acknowledgement is transmitted by BellSouth at BellSouth's side of the interface (gateway). For those CLECs using EDI, if more than one CLEC uses the same ordering center, an Acknowledgement Message will be returned to the "Aggregator", however, BellSouth will not be able to determine which specific CLEC this message represented.

### Calculation

**Response Interval** = (a - b)

- a = Date and Time Acknowledgement Notices returned to CLEC
- b = Date and Time Messages/LSRs electronically submitted by the CLEC via EDI or TAG respectively

**Average Response Interval** = (c / d)

- c = Sum of all Response Intervals for returned acknowledgements
- d = Total number of electronically submitted Messages/LSRs received, via EDI or TAG respectively, for which Acknowledgement Notices were returned in the Reporting Period.

**Percent within Interval** = (e / f) X 100

- e = Total number of electronically submitted messages/LSRs received, from CLEC via EDI or TAG respectively, in the Reporting Period.
- f = Total number of electronically submitted messages/LSRs acknowledged in the Reporting Period.

### Reporting Structure

- CLEC Aggregate
- CLEC Specific
- Geographic Scope
  - Region
- Electronically Submitted LSRs
  0 – <=10 minutes
  > 10 – <= 20 minutes
  > 20 – <= 30 minutes
  0 – <= 30 minutes
  > 30 – <= 45 minutes
  > 45 – <= 60 minutes

> 60 – <= 120 minutes
> 120 minutes
- Average interval for electronically submitted LSRs in minutes

## Data Retained

### Relating to CLEC Experience

- Report Month
- Record of Functional Acknowledgements

### Relating to BellSouth Performance

- Not Applicable

## SQM Disaggregation - Analog/Benchmark

| SQM Level of Disaggregation | SQM Analog/Benchmark |
|---|---|
| EDI | EDI – 95% <= 30 Minutes |
| TAG | TAG – 95% <= 30 Minutes |

## SEEM Measure

| SEEM | Tier I | Tier II |
|---|---|---|
| Yes | X | X |

## SEEM Disaggregation - Analog/Benchmark

| SEEM Disaggregation | SEEM Analog/Benchmark |
|---|---|
| EDI | EDI – 95% <= 30 Minutes |
| TAG | TAG – 95% <= 30 Minutes |

# O-2: Acknowledgement Message Completeness

## Definition

This measurement provides the percent of Messages/LSRs received via EDI or TAG, which are acknowledged electronically.

## Exclusions

Manually submitted LSRs

## Business Rules

EDI and TAG send Functional Acknowledgements for all LSRs, which are electronically submitted by a CLEC. For those CLECs using EDI, if more than one CLEC uses the same ordering center, an Acknowledgement Message will be returned to the "Aggregator", however, BellSouth will not be able to determine which specific CLEC this message represented. The Acknowledgement Message is returned prior to the determination of whether the LSR will be partially mechanized or fully mechanized.

## Calculation

**Acknowledgement Completeness** = (a / b) X 100

- a = Total number of Functional Acknowledgements returned in the reporting period for Messages/LSRs electronically submitted by EDI or TAG respectively
- b = Total number of electronically submitted Messages/LSRs received in the reporting period by EDI or TAG respectively

## Report Structure

- CLEC Aggregate
- CLEC Specific
- Geographic Scope
  - Region

**Note**: Acknowledgement message is generated before the system recognizes whether this message (LSR) will be partially or fully mechanized.

## Data Retained

### Relating to CLEC Experience

- Report Month
- Record of Functional Acknowledgements

### Relating to BellSouth Performance

- Not Applicable

## SQM Disaggregation - Analog/Benchmark

| SQM Level of Disaggregation | SQM Analog/Benchmark |
|---|---|
| EDI | Benchmark: 99.9% |
| TAG | Benchmark: 99.5% |

## SEEM Measure

| SEEM | Tier I | Tier II |
|---|---|---|
| Yes | X | X |

## SEEM Disaggregation - Analog/Benchmark

| SEEM Disaggregation | SEEM Analog/Benchmark |
|---|---|
| • EDI | Benchmark: 99.9% |
| • TAG | Benchmark: 99.5% |

# O-3: Percent Flow-Through Service Requests (Summary)

## Definition

The percentage of Local Service Requests (LSR) and LNP Local Service Requests (LNP LSRs) submitted electronically via the CLEC mechanized ordering process that flow through and reach a status for a FOC to be issued, without manual intervention.

## Exclusions

- Fatal Rejects
- Auto Clarification
- Manual Fallout for Percent Flow-Through only
- CLEC System Fallout
- Scheduled OSS Maintenance

## Business Rules

The CLEC mechanized ordering process includes all LSRs, including supplements (subsequent versions) which are submitted through one of the three gateway interfaces (TAG, EDI and LENS), that flow through and reach a status for a FOC to be issued, without manual intervention. These LSRs can be divided into two classes of service: Business and Residence, and two types of service: Resale, and Unbundled Network Elements (UNE). The CLEC mechanized ordering process does not include LSRs which are submitted manually (for example, fax and courier) or are not designed to flow through (for example, Manual Fallout.)

**Definitions**:

**Fatal Rejects:** Errors that prevent an LSR, submitted electronically by the CLEC, from being processed further. When an LSR is submitted by a CLEC, LEO/LNP Gateway will perform edit checks to ensure the data received is correctly formatted and complete. For example, if the PON field contains an invalid character, LEO/LNP Gateway will reject the LSR and the CLEC will receive a Fatal Reject.

**Auto-Clarification:** Clarifications that occur due to invalid data within the LSR. LESOG/LAUTO will perform data validity checks to ensure the data within the LSR is correct and valid. For example, if the address on the LSR is not valid according to RSAG, or if the LNP is not available for the NPA NXX requested, the CLEC will receive an Auto-Clarification.

**Manual Fallout:** Planned Fallout that occur by design. Certain LSRs are designed to fallout of the Mechanized Order Process due to their complexity. These LSRs are manually processed by the LCSC. When a CLEC submits an LSR, LESOG/LAUTO will determine if the LSR should be forwarded to LCSC for manual handling. Following are the categories for Manual Fallout:

1. Complex*
2 Special pricing plans
3. Some Partial migrations (All LNP Partial Migrations)
4. New telephone number not yet posted to BOCRIS
5. Pending order review required
6. CSR inaccuracies such as invalid or missing CSR data in CRIS
7. Expedites (requested by the CLEC)
8. Denials-restore and conversion, or disconnect and conversion orders
9. Class of service invalid in certain states with some types of service
10. Low volume such as activity type “T” (move)
11. More than 25 business lines, or more than 15 loops
12. Transfer of calls option for the CLEC end users
13. Directory Listings (Identions and Captions)
14. LNP Only – Supplement LSRs except supps of O-2 (Due Date Changes) on Req Type CB

*See LSR Flow-Through Matrix in Appendix E for a list of services, including complex services, and whether LSRs issued for the services are eligible to flow through. The matrix is updated automatically when new services are added or the systems are improved to allow a service to flow through. The current version of the Flow-Through Matrix is on the PMAP website (http://pmap.bellsouth.com) in the Documentation/Exhibits folder. Any change in the flow-through order category from flow-through to non-flow-through shall require prior

Commission approval.

**Total System Fallout:** Errors that require manual review by the LCSC to determine if the error is caused by the CLEC, or is due to BellSouth system functionality. If it is determined the error is caused by the CLEC, the LSR will be sent back to the CLEC for clarification. If it is determined the error is BellSouth caused, the LCSC representative will correct the error, and the LSR will continue to be processed.

**Z Status:** LSRs that receive a supplemental LSR submission prior to final disposition of the original LSR.

## Calculation

**Percent Flow Through** = a / [b - (c + d + e + f)] X 100

- a = the total number of LSRs that flow through LESOG/LAUTO and reach a status for a FOC to be issued
- b = the number of LSRs passed from LEO/LNP Gateway to LESOG/LAUTO
- c = the number of LSRs that fallout for manual processing
- d = the number of LSRs that are returned to the CLEC for auto clarification
- e = the number of LSRs that are returned to the CLEC from the LCSC due to CLEC clarification
- f = the number of LSRs that receive a Z status.

**Percent Achieved Flow Through** = a / [b - (c + d + e)] X 100

- a = the number of LSRs that flow through LESOG/LAUTO and reach a status for a FOC to be issued.
- b = the number of LSRs passed from LEO/LNP Gateway to LESOG/LAUTO
- c = the number of LSRs that are returned to the CLEC for auto clarification
- d = the number of LSRs that are returned to the CLEC from the LCSC due to CLEC clarification
- e = the number of LSRs that receive Z status

## Report Structure

- CLEC Aggregate
  - Region

## Data Retained

### Relating to CLEC Experience

- Report Month
- Total Number of LSRs Received, by Interface, by CLEC
  - TAG
  - EDI
  - LENS
- Total Number of Errors by Type, by CLEC
  - Fatal Rejects
  - Auto Clarification
  - CLEC Caused System Fallout
- Total Number of Errors by Error Code
- Total Fallout for Manual Processing

### Relating to BellSouth Performance

- Report Month
- Total Number of Errors by Type
  - BellSouth System Error

## SQM Disaggregation - Analog/Benchmark

| SQM Level of Disaggregation | SQM Analog/Benchmark[a] |
|---|---|
| • Residence | Benchmark: 95% |
| • Business | Benchmark: 90% |
| • UNE - Loops | Benchmark: 85% |
| • UNE-P | Benchmark: 90% |
| • LNP | Benchmark: 85% |

## SEEM Measure

| SEEM | Tier I | Tier II |
|---|---|---|
| Yes | | X |

## SEEM Disaggregation - Analog/Benchmark

| SEEM Disaggregation | SEEM Analog/Benchmark[a] |
|---|---|
| • Residence | Benchmark: 95% |
| • Business | Benchmark: 90% |
| • UNE - Loops | Benchmark: 85% |
| • UNE-P | Benchmark: 90% |
| • LNP | Benchmark: 85% |



[a] *Benchmarks do not apply to the "Percent Achieved Flow-Through."*

# O-4: Percent Flow-Through Service Requests (Detail)

## Definition

A detailed list, by CLEC, of the percentage of Local Service Requests (LSR) and LNP Local Service Requests (LNP LSRs) submitted electronically via the CLEC mechanized ordering process that flow through and reach a status for a FOC to be issued, without manual or human intervention.

## Exclusions

- Fatal Rejects
- Auto Clarification
- Manual Fallout for Percent Flow-Through only
- CLEC System Fallout
- Scheduled OSS Maintenance

## Business Rules

The CLEC mechanized ordering process includes all LSRs, including supplements (subsequent versions) which are submitted through one of the three gateway interfaces (TAG, EDI, and LENS), that flow through and reach a status for a FOC to be issued, without manual intervention. These LSRs can be divided into two classes of service: Business and Residence, and two types of service: Resale, and Unbundled Network Elements (UNE). The CLEC mechanized ordering process does not include LSRs, which are submitted manually (for example, fax and courier) or are not designed to flow through (for example, Manual Fallout.)

**Definitions**:

**Fatal Rejects:** Errors that prevent an LSR, submitted electronically by the CLEC, from being processed further. When an LSR is submitted by a CLEC, LEO/LNP Gateway will perform edit checks to ensure the data received is correctly formatted and complete. For example, if the PON field contains an invalid character, LEO/LNP Gateway will reject the LSR and the CLEC will receive a Fatal Reject.

**Auto-Clarification:** Clarifications that occur due to invalid data within the LSR. LESOG/LAUTO will perform data validity checks to ensure the data within the LSR is correct and valid. For example, if the address on the LSR is not valid according to RSAG, or if the LNP is not available for the NPA NXX requested, the CLEC will receive an Auto-Clarification.

**Manual Fallout:** Planned Fallout that occur by design. Certain LSRs are designed to fallout of the Mechanized Order Process due to their complexity. These LSRs are manually processed by the LCSC. When a CLEC submits an LSR, LESOG/LAUTO will determine if the LSR should be forwarded to LCSC for manual handling. Following are the categories for Manual Fallout:

1. Complex*
2 Special pricing plans
3. Some Partial migrations (All LNP Partial Migrations)
4. New telephone number not yet posted to BOCRIS
5. Pending order review required
6. CSR inaccuracies such as invalid or missing CSR data in CRIS
7. Expedites (requested by the CLEC)
8. Denials-restore and conversion, or disconnect and conversion orders
9. Class of service invalid in certain states with some types of service
10. Low volume such as activity type “T” (move)
11. More than 25 business lines, or more than 15 loops
12. Transfer of calls option for the CLEC end users
13. Directory Listings (Identions and Captions)
14. LNP Only – Supplement LSRs except supps of O-2 (Due Date Changes) on Req Type CB

*See LSR Flow-Through Matrix in Appendix E for a list of services, including complex services, and whether LSRs issued for the services are eligible to flow through. The matrix is updated automatically when new services are added or the systems are improved to allow a service to flow through. The current version of the Flow-Through Matrix is on the PMAP website (http://pmap.bellsouth.com) in the

Documentation/Exhibits folder. Any change in the flow-through order category from flow-through to non-flow-through shall require prior Commission approval.

**Total System Fallout:** Errors that require manual review by the LCSC to determine if the error is caused by the CLEC, or is due to BellSouth system functionality. If it is determined the error is caused by the CLEC, the LSR will be sent back to the CLEC for clarification. If it is determined the error is BellSouth caused, the LCSC representative will correct the error, and the LSR will continue to be processed.

**Z Status:** LSRs that receive a supplemental LSR submission prior to final disposition of the original LSR.

## Calculation

**Percent Flow Through** = a / [b - (c + d + e + f)] X 100

- a = the total number of LSRs that flow through LESOG/LAUTO and reach a status for a FOC to be issued
- b = the number of LSRs passed from LEO/LNP Gateway to LESOG/LAUTO
- c = the number of LSRs that fallout for manual processing
- d = the number of LSRs that are returned to the CLEC for auto clarification
- e = the number of LSRs that are returned to the CLEC from the LCSC due to CLEC clarification
- f = the number of LSRs that receive a Z status.

**Percent Achieved Flow Through** = a / [b - (c + d + e)] X 100

- a = the number of LSRs that flow through LESOG/LAUTO and reach a status for a FOC to be issued
- b = the number of LSRs passed from LEO/LNP Gateway to LESOG/LAUTO
- c = the number of LSRs that are returned to the CLEC for auto clarification
- d = the number of LSRs that are returned to the CLEC from the LCSC due to CLEC clarification
- e = the number of LSRs that receive Z status

## Report Structure

Provides the flow through percentage for each CLEC (by alias designation) submitting LSRs through the CLEC mechanized ordering process. The report provides the following:

- CLEC (by alias designation)
- Number of fatal rejects
- Mechanized interface used
- Total mechanized LSRs
- Total manual fallout
- Number of auto clarifications returned to CLEC
- Number of validated LSRs
- Number of BellSouth caused fallout
- Number of CLEC caused fallout
- Number of Service Orders Issued
- Base calculation
- CLEC error excluded calculation
- Region

## Data Retained

### Relating to CLEC Experience

- Report Month
- Total Number of LSRs Received, by Interface, by CLEC
  - TAG
  - EDI
  - LENS
- Total Number of Errors by Type, by CLEC
  - Fatal Rejects
  - Auto Clarification

- CLEC Errors
- Total Number of Errors by Error Code
- Total Fallout for Manual Processing

**Relating to BellSouth Performance**

- Report Month
- Total Number of Errors by Type
  - BellSouth System Error

## SQM Disaggregation - Analog/Benchmark

| SQM Level of Disaggregation | SQM Analog/Benchmark[a] |
|---|---|
| Residence | Benchmark: 95% |
| Business | Benchmark: 90% |
| UNE - Loops | Benchmark: 85% |
| UNE-P | Benchmark: 90% |
| LNP | Benchmark: 85% |

## SEEM Measure

| SEEM | Tier I | Tier II |
|---|---|---|
| Yes | X | |

## SEEM Disaggregation - Analog/Benchmark

| SEEM Disaggregation | SEEM Analog/Benchmark |
|---|---|
| Residence | Benchmark: 95% |
| Business | Benchmark: 90% |
| UNE- Loops | Benchmark: 85% |
| UNE-P | Benchmark: 90% |
| LNP | Benchmark: 85% |



[a] *Benchmarks do not apply to the "Percent Achieved Flow-Through."*

# Flow-Through Error Analysis

## Definition

An analysis of each error type (by error code) that was experienced by the LSRs that did not flow through or reached a status for a FOC to be issued.

## Exclusions

Each Error Analysis is error code specific, therefore exclusions are not applicable.

## Business Rules

The CLEC mechanized ordering process includes all LSRs, including supplements (subsequent versions) which are submitted through one of the three gateway interfaces (TAG, EDI, and LENS), that flow through and reach a status for a FOC to be issued. The CLEC mechanized ordering process does not include LSRs which are submitted manually (for example, fax and courier).

## Calculation

Total for each error type

## Report Structure

Provides an analysis of each error type (by error code). The report is in descending order by count of each error code and provides the following:

- Error Type (by error code)
- Count of each error type
- Percent of each error type
- Cumulative percent
- Error Description
- CLEC Caused Count of each error code
- Percent of aggregate by CLEC caused count
- Percent of CLEC caused count
- BellSouth Caused Count of each error code
- Percent of aggregate by BellSouth caused count
- Percent of BellSouth by BellSouth caused count.

## Data Retained

### Relating to CLEC Experience

- Report Month
- Total Number of LSRs Received
- Total Number of Errors by Type (by Error Code)
  - CLEC caused error

**Relating to BellSouth Performance**

- Report Month
- Total Number of Errors by Type (by Error Code)
  - BellSouth System Error

## SQM Disaggregation - Analog/Benchmark

| SQM Level of Disaggregation | SQM Analog/Benchmark |
|---|---|
| • Not Applicable | Not Applicable |

## SEEM Measure

| SEEM | Tier I | Tier II |
|---|---|---|
| No | | |

## SEEM Disaggregation - Analog/Benchmark

| SEEM Disaggregation | SEEM Analog/Benchmark |
|---|---|
| • Not Applicable | Not Applicable |

# O-6: CLEC LSR Information



## Definition

A list with the flow through activity of LSRs by CC, PON and Ver, issued by each CLEC during the report period.

## Exclusions

- Fatal Rejects
- LSRs Submitted Manually

## Business Rules

The CLEC mechanized ordering process includes all LSRs, including supplements (subsequent versions) which are submitted through one of the three gateway interfaces (TAG, EDI, and LENS), that flow through and reach a status for a FOC to be issued. The CLEC mechanized ordering process does not include LSRs which are submitted manually (for example, fax and courier).

## Calculation

Not Applicable

## Report Structure

Provides a list with the flow through activity of LSRs by CC, PON and Ver, issued by each CLEC during the report period with an explanation of the columns and content. This report is available on a CLEC specific basis. The report provides the following for each LSR.

- CC
- PON
- Ver
- Timestamp
- Type
- Err #
- Note or Error Description

## Data Retained

### Relating to CLEC Experience

- Report Month
- Record of LSRs Received by CC, PON and Ver
- Record of Timestamp, Type, Err # and Note or Error Description for Each LSR by CC, PON and Ver

### Relating to BellSouth Performance

- Not Applicable

## SQM Disaggregation - Analog/Benchmark

| SQM Level of Disaggregation | SQM Analog/Benchmark |
|---|---|
| Not Applicable | Not Applicable |

## SEEM Measure

| SEEM | Tier I | Tier II |
|---|---|---|
| No | | |

## SEEM Disaggregation - Analog/Benchmark

| SEEM Disaggregation | SEEM Analog/Benchmark |
|---|---|
| • Not Applicable | Not Applicable |

# O-7: Percent Rejected Service Requests



## Definition

Percent Rejected Service Request is the percent of total Service Requests [(Local Service Requests (LSRs) or Access Service Requests (ASRs)] received which are rejected due to error or omission. Service Requests are considered valid when they are submitted by the CLEC and pass edit checks to insure the data received is correctly formatted and complete.

## Exclusions

- Service Requests canceled by the CLEC prior to being rejected/clarified.
- Fatal Rejects
- Order Activities of BellSouth or the CLEC associated with internal or administrative use of local services (Record Orders, Test Orders, etc.) where identifiable
- LSRs identified as "Projects"

## Business Rules

**Fully Mechanized:** An LSR/Service Request is considered "rejected" when it is submitted electronically but does not pass edit checks in the ordering systems (EDI, LENS, TAG, LESOG, LNP Gateway, LAUTO) and is returned to the CLEC without manual intervention. There are two types of "Rejects" in the Mechanized category:

A **Fatal Reject** occurs when a CLEC attempts to electronically submit an LSR but required fields are either not populated or incorrectly populated and the request is returned to the CLEC before it is considered a valid LSR.

Fatal rejects are reported in a separate column, and for informational purposes ONLY. They are not considered in the calculation of the percent of total LSRs rejected or the total number of rejected LSRs.

An **Auto Clarification** occurs when a valid LSR is electronically submitted but rejected from LESOG or LAUTO because it does not pass further edit checks for order accuracy.

**Partially Mechanized:** A valid LSR, which is electronically submitted (via EDI, LENS, TAG) but cannot be processed electronically and "falls out" for manual handling. It is then put into "clarification" and sent back (rejected) to the CLEC.

**Non-Mechanized:** LSRs which are faxed or mailed to the LCSC for processing and "clarified" (rejected) back to the CLEC by the BellSouth service representative.

**Interconnection Trunks:** Interconnection Trunks are ordered on Access Service Requests (ASRs). ASRs are submitted to and processed by the Local Interconnection Service Center (LISC). Trunk data is reported as a separate category.

## Calculation

**Percent Rejected Service Requests** = (a / b) X 100

- a = Total Number of Service Requests Rejected in the reporting period
- b = Total Number of Service Requests Received in the reporting period

## Report Structure

- Fully Mechanized, Partially Mechanized, Non-Mechanized
- Trunks
- CLEC Specific
- CLEC Aggregate
- Geographic Scope
  - State

- Region
- Product Specific percent Rejected
- Total percent Rejected

## Data Retained

### Relating to CLEC Experience

- Report Month
- Total Number of LSRs
- Total Number of Rejects
- State and Region
- Total Number of ASRs (Trunks)

### Relating to BellSouth Performance

- Not Applicable

## SQM Disaggregation - Analog/Benchmark

| SQM Level of Disaggregation | SQM Analog/Benchmark |
|---|---|
| Mechanized, Partially Mechanized and Non-Mechanized | |
| Resale – Residence | Diagnostic |
| Resale - Business | |
| Resale – Design (Special) | |
| Resale PBX | |
| Resale Centrex | |
| Resale ISDN | |
| LNP (Standalone) | |
| INP (Standalone) | |
| 2W Analog Loop Design | |
| 2W Analog Loop Non-Design | |
| 2W Analog Loop with INP Design | |
| 2W Analog Loop with INP Non-Design | |
| 2W Analog Loop with LNP Design | |
| 2W Analog Loop with LNP Non-Design | |
| UNE Digital Loop < DS1 | |
| UNE Digital Loop >= DS1 | |
| UNE Loop + Port Combinations | |
| UNE Combination Other | |
| UNE ISDN Loop | |
| UNE Other Design | |
| UNE Other Non-Design | |
| UNE Line Splitting | |
| EELs | |
| Switch Ports | |
| UNE xDSL (ADSL, HDSL, UCL) | |
| Line Sharing | |
| Local Interoffice Transport | |
| Local Interconnection Trunks | |

## SEEM Measure

| SEEM | Tier I | Tier II |
|---|---|---|
| No | | |

## SEEM Disaggregation - Analog/Benchmark

| SEEM Disaggregation | SEEM Analog/Benchmark |
|---|---|
| • Not Applicable | Not Applicable |

# O-8: Reject Interval

## Definition

Reject Interval is the average reject time from receipt of Service Requests [(Local Service Requests (LSRs) or Access Service Requests (ASRs)] to the distribution of a Reject. Service Requests are considered valid when they are submitted by the CLEC and pass edit checks to insure the data received is correctly formatted and complete. When there are multiple rejects on a single version of an LSR, the first reject issued is used for the calculation of the interval duration.



## Exclusions

- Service Requests canceled by CLEC prior to being rejected/clarified.
- Fatal Rejects
- Designated Holidays are excluded from the interval calculation for partially mechanized and non-mechanized LSRs/ASRs only.
- LSRs which are identified and classified as "Projects"

  Non-business hours for Partially Mechanized and Non-Mechanized LSRs are excluded from the interval calculation. The excluded time is the time outside of normal operations which can be found at the following website: http://www.interconnection.bellsouth.com/centers/html/lcsc.html

  Local Interconnection Service Center (LISC) - Monday through Friday 4:30 PM until 8:00 AM
  From 4:30 PM Friday until 8:00 AM Monday

  The hours excluded will be altered to reflect changes in the Center operating hours. The LCSC will accept faxed LSRs only during posted hours of operation.

  The interval will be the amount of time accrued from receipt of the LSR until normal closing of the center if an LSR is worked using overtime hours.

  In the case of a Partially Mechanized LSR received and worked after normal business hours, the interval will be set at one (1) minute.

## Business Rules

The Reject interval is determined for each rejected LSR processed during the reporting period. The Reject interval is the elapsed time from when BellSouth receives LSR (date and time stamps in EDI or TAG) until that LSR is rejected back to the CLEC. Elapsed time for each LSR (date and time stamps in EDI or TAG) is accumulated for each reporting dimension. The accumulated time for each reporting dimension is then divided by the associated total number of rejected LSRs to produce the reject interval distribution.

**Fully Mechanized:** The elapsed time from receipt of a valid electronically submitted LSR (date and time stamp in EDI translator or TAG) until the LSR is rejected (date and time stamp or reject in EDI translator, or TAG). Auto Clarifications are considered in the Fully Mechanized category.

**Partially Mechanized:** The elapsed time from receipt of a valid electronically submitted LSR (date and time stamp in EDI translator or TAG) until it falls out for manual handling. The stop time on partially mechanized LSRs is when the LCSC Service Representative clarifies the LSR back to the CLEC via EDI translator, or TAG.

**Non-Mechanized:** The elapsed time from receipt of a valid LSR (date and time stamp of FAX or date and time mailed LSR is received in the LCSC) until notice of the reject (clarification) is returned to the CLEC via LON.

**Interconnection Trunks:** Interconnection Trunks are ordered on Access Service Requests (ASRs). ASRs are submitted to and processed by the Local Interconnection Service Center (LISC). Trunk data is reported as a separate category.

## Calculation

**Reject Interval** = (a - b)

- a = Date and Time of Service Request Rejection
- b = Date and Time of Service Request Receipt

**Average Reject Interval** = (c / d)

- c = Sum of all Reject Intervals
- d = Number of Service Requests Rejected in Reporting Period

**Reject Interval Distribution** = (e / f) X 100

- e = Service Requests Rejected in reported interval
- f = Total Number of Service Requests Rejected in Reporting Period

## Report Structure

- Fully Mechanized, Partially Mechanized, Non-Mechanized
- CLEC Specific
- CLEC Aggregate
- Geographic Scope
  - State
  - Region
- Fully Mechanized:
  0 - <= 4 minutes
  > 4 - <= 8 minutes
  >8 - <= 12 minutes
  > 12 - <= 60 minutes
  0 - <= 1 hour
  > 1 - <= 4 hours
  > 4 - <= 8 hours
  > 8 - <= 12 hours
  > 12 - <= 16 hours
  > 16 - <= 20 hours
  > 20 - <= 24 hours
  > 24 hours
- Partially Mechanized:
  0 - <= 1 hour
  > 1 - <= 4 hours
  > 4 - <= 8 hours
  > 8 - <= 10 hours
  0 - <= 10 hours
  > 10 - <= 18 hours
  0 - <= 18 hours
  > 18 - <= 24 hours
  > 24 hours
- Non-mechanized:
  0 - <= 1 hour
  > 1 - <= 4 hours
  > 4 - <= 8 hours
  > 8 - <= 12 hours
  > 12 - <= 16 hours
  > 16 - <= 20 hours
  > 20 - <= 24 hours
  0 - <= 24 hours
  > 24 hours
- Trunks:

0 - <= 36 hours
> 36 hours
- Average Interval is reported in business hours.

## Data Retained

### Relating to CLEC Experience

- Report Month
- Reject Interval
- Total Number of LSRs
- Total Number of Rejects
- State and Region
- Total Number of ASRs (Trunks)

### Relating to BellSouth Performance

- Not Applicable

## SQM Disaggregation - Analog/Benchmark

| SQM Level of Disaggregation | SQM Analog/Benchmark |
|---|---|
| Resale – Residence | Fully Mechanized: 97% <= 1 Hour |
| Resale – Business | Partially Mechanized: 95% <= 10 Hours |
| Resale – Design (Special) | Non Mechanized: 95% <= 24 Hours |
| Resale PBX | |
| Resale Centrex | |
| Resale ISDN | |
| LNP (Standalone) | |
| INP (Standalone) | |
| 2W Analog Loop Design | |
| 2W Analog Loop Non-Design | |
| 2W Analog Loop with INP Design | |
| 2W Analog Loop with INP Non-Design | |
| 2W Analog Loop with LNP Design | |
| 2W Analog Loop with LNP Non-Design | |
| UNE Digital Loop < DS1 | |
| UNE Digital Loop >= DS1 | |
| UNE Loop + Port Combinations | |
| UNE Combination Other | |
| UNE ISDN Loop | |
| UNE Other Design | |
| UNE Other Non-Design | |
| UNE Line Splitting | |
| EELs | |
| Switch Ports | |
| UNE xDSL (ADSL, HDSL, UCL) | |
| Line Sharing | |
| Local Interoffice Transport | |
| Local Interconnection Trunks | Trunks: 95% <= 36 Hours |

## SEEM Measure

| SEEM | Tier I | Tier II |
|---|---|---|
| Yes | X | X |

## SEEM Disaggregation - Analog/Benchmark

| SEEM Disaggregation | SEEM Analog/Benchmark |
|---|---|
| • Fully Mechanized | 97% <= 1 hour |
| • Partially Mechanized | 95% <= 10 hours |
| • Non-Mechanized | 95% <= 24 hours |
| • Local Interconnection Trunks | 95% <= 36 hours |

# O-9: Firm Order Confirmation Timeliness

## Definition

Interval for Return of a Firm Order Confirmation (FOC Interval) is the average response time from receipt of valid LSR or ASR to distribution of a Firm Order Confirmation. The interval will include an electronic facilities check.

## Exclusions

- Service Requests canceled by CLEC prior to being confirmed.
- Designated Holidays are excluded from the interval calculation for partially mechanized and non-mechanized LSRs/ASRs only.
- LSRs which are identified and classified as "Projects"

  Non-business hours for Partially Mechanized and Non-Mechanized LSRs are excluded from the interval calculation. The excluded time is the time outside of normal operations which can be found at the following website: http://www.interconnection.bellsouth.com/centers/html/lcsc.html

  For ASRs processed in the Local Interconnection Service Center (LISC) - From 4:30 PM All hours outside of Monday – Friday 8:00 AM – 4:30 PM CST, should be excluded.

  The hours excluded will be altered to reflect changes in the Center operating hours. The Centers will accept faxed LSRs only during posted hours of operation.

  The interval will be the amount of time accrued from receipt of the LSR until normal closing of the center if an LSR is worked using overtime hours.

  In the case of a Partially Mechanized LSR received and worked after normal business hours, the interval will be set at one (1) minute.

## Business Rules

**Fully Mechanized:** The elapsed time from receipt of a valid electronically submitted LSR (date and time stamp in EDI or TAG) until the LSR is processed, appropriate service orders are generated and a Firm Order Confirmation is returned to the CLEC via EDI translator or TAG.

**Partially Mechanized:** The elapsed time from receipt of a valid electronically submitted LSR (date and time stamp in EDI, or TAG) which falls out for manual handling until appropriate service orders are issued by a BellSouth service representative via Direct Order Entry (DOE) or Service Order Negotiation Generation System (SONGS) to SOCS and a Firm Order Confirmation is returned to the CLEC via EDI translator, or TAG.

**Non-Mechanized:** The elapsed time from receipt of a valid paper LSR (date and time stamp of FAX or date and time paper LSRs received in LCSC) until appropriate service orders are issued by a BellSouth service representative via Direct Order Entry (DOE) or Service Order Negotiation Generation System (SONGS) to SOCS and a Firm Order Confirmation is sent to the CLEC via LON.

**Interconnection Trunks:** Interconnection Trunks are ordered on Access Service Requests (ASRs). ASRs are submitted to and processed by the Local Interconnection Service Center (LISC). The elapsed time is measured from receipt of a valid ASR (date and time stamp of a FAX or paper ASR received in the LISC) until the appropriate orders are issued by a BellSouth representative and a FOC issued in EXACT. Trunk data is reported as a separate category.

**Note:** When multiple FOCs occur on a single version of an LSR, the first FOC is used to measure the interval.

## Calculation

**Firm Order Confirmation Interval** = (a - b)

- a = Date and Time of Firm Order Confirmation
- b = Date and Time of Service Request Receipt

**Average FOC Interval** = (c / d)

- c = Sum of all Firm Order Confirmation Times
- d = Number of Service Requests Confirmed in Reporting Period

**FOC Interval Distribution** = (e / f) X 100

- e = Service Requests Confirmed in Designated Interval
- f = Total Service Requests Confirmed in the Reporting Period

## Report Structure

- Fully Mechanized, Partially Mechanized, Non-Mechanized
  - CLEC Specific
  - CLEC Aggregate
- Geographic Scope
  - State
  - Region
- Fully Mechanized:
  0 - <= 15 minutes
  > 15 - <= 30 minutes
  > 30 - <= 45 minutes
  > 45 - <= 60 minutes
  > 60 - <= 90 minutes
  > 90 - <= 120 minutes
  > 120 - <= 180 minutes
  0 - <= 3 hours
  > 3 - <= 6 hours
  > 6 - <= 12 hours
  > 12 - <= 24 hours
  > 24 - <= 48 hours
  > 48 hours
- Partially Mechanized:
  0 - <= 4 hours
  > 4 - <= 8 hours
  > 8 - <= 10 hours
  0 - <= 10 hours
  > 10 - <= 18 hours
  0 - <= 18 hours
  > 18 - <= 24 hours
  > 24 - <= 48 hours
  > 48 hours
- Non-mechanized:
  0 - <= 4 hours
  > 4 - <= 8 hours
  > 8 - <= 12 hours
  > 12 - <= 16 hours
  0 - <= 24 hours
  > 16 - <= 20 hours
  > 20 - <= 24 hours
  > 24 - <= 36 hours
  0 - <= 36 hours

> 36 - <= 48 hours
> 48 hours

- Trunks:
  0 - <= 48 hours
  > 48 hours
- Average Interval is reported in business hours

## Data Retained

### Relating to CLEC Experience

- Report Month
- Interval for FOC
- Total Number of LSRs
- State and Region
- Total Number of ASRs (Trunks)

### Relating to BellSouth Performance

- Not Applicable

## SQM Disaggregation - Analog/Benchmark

| SQM Level of Disaggregation | SQM Analog/Benchmark |
|---|---|
| Resale – Residence | Fully Mechanized: 95% <= 3 Hours |
| Resale – Business | Partially Mechanized: 95% <= 10 Hours |
| Resale – Design (Special) | Non-Mechanized: 95% <= 24 Hours |
| Resale PBX | |
| Resale Centrex | |
| Resale ISDN | |
| LNP (Standalone) | |
| INP (Standalone) | |
| 2W Analog Loop Design | |
| 2W Analog Loop Non-Design | |
| 2W Analog Loop with INP Design | |
| 2W Analog Loop with INP Non-Design | |
| 2W Analog Loop with LNP Design | |
| 2W Analog Loop with LNP Non-Design | |
| UNE Digital Loop < DS1 | |
| UNE Digital Loop >= DS1 | |
| UNE Loop + Port Combinations | |
| UNE Combination Other | |
| UNE ISDN Loop | |
| UNE Other Design | |
| UNE Other Non-Design | |
| UNE Line Splitting | |
| EELs | |
| Switch Ports | |
| UNE xDSL (ADSL, HDSL, UCL) | |
| Line Sharing | |
| Local Interoffice Transport | |
| Local Interconnection Trunks | Trunks: 95% <= 48 Hours |

## SEEM Measure

| SEEM | Tier I | Tier II |
|---|---|---|
| Yes | X | X |

## SEEM Disaggregation - Analog/Benchmark

| SEEM Disaggregation | SEEM Analog/Benchmark |
|---|---|
| • Fully Mechanized | 95% <= 3 Hours |
| • Partially Mechanized | 95% <= 10 Hours |
| • Non-Mechanized | 95% <= 24 Hours |
| • Local Interconnection Trunks | 95% <= 48 Hours |

# O-10: Service Inquiry with LSR Firm Order Confirmation (FOC) Response Time Manual[1]

## Definition

This report measures the interval and the percent within the interval from the submission of a Service Inquiry (SI) with Firm Order LSR to the distribution of a Firm Order Confirmation (FOC).

## Exclusions

- Designated Holidays are excluded from the interval calculation.
- Weekend hours from 5:00 PM Friday until 8:00AM Monday are excluded from the interval calculation of the Service Inquiry.
- Canceled Requests
- Electronically Submitted Requests
- Non-business hours for Partially Mechanized and Non-Mechanized LSRs are excluded from the interval calculation. The excluded time is the time outside of normal operations which can be found at the following website: http//www.interconnection.bellsouth.com/centers/html/lcsc.html

## Business Rules

This measurement combines four intervals:

1. From receipt of a valid Service Inquiry with LSR to hand off to the Service Advocacy Center (SAC) for Loop 'Look-up'.
2. From SAC start date to SAC complete date.
3. From SAC complete date to the Complex Resale Support Group (CRSG) complete date with hand off to LCSC.
4. From receipt of a valid SI/LSR in the LCSC to Firm Order Confirmation.

(A valid Service Inquiry is an inquiry that has all required fields populated correctly and has not been returned for clarification.)

## Calculation

**FOC Timeliness Interval with SI** = (a - b)

- a = Date and Time Firm Order Confirmation (FOC) for SI with LSR returned to CLEC
- b = Date and Time SI with LSR received

**Average Interval** = (c / d)

- c = Sum of all FOC Timeliness Intervals with SI
- d = Total number of SIs with LSRs received in the reporting period

**Percent Within Interval** = (e / f) X 100

- e = Total number of Service Inquiries with LSRs received by the CRSG to distribution of FOC by the Local Carrier Service Center (LCSC)
- f = Total number of Service Inquiries with LSRs received in the reporting period

## Report Structure

- CLEC Aggregate
- CLEC Specific
- Geographic Scope
  - State
  - Region

[1] *See O-9 for FOC Timeliness*

- Intervals
  0 – <= 3 days
  > 3 – <= 5 days
  0 – <=5 days
  > 5 – <= 7 days
  > 7 – <= 10 days
  > 10 – <= 15 days
  >15 days
- Average Interval measured in days

## Data Retained

### Relating to CLEC Experience

- Report Month
- Total Number of Requests
- SI Intervals
- State and Region

### Relating to BellSouth Performance

- Not Applicable

## SQM Disaggregation - Analog/Benchmark

| SQM Level of Disaggregation | SQM Analog/Benchmark |
|---|---|
| • xDSL (includes UNE unbundled ADSL, HDSL and UNE Unbundled Copper Loops) | 95% Returned <= 5 Business Days |
| • Unbundled Interoffice Transport | |

## SEEM Measure

| SEEM | Tier I | Tier II |
|---|---|---|
| No | | |

## SEEM Disaggregation - Analog/Benchmark

| SEEM Disaggregation | SEEM Analog/Benchmark |
|---|---|
| • Not Applicable | Not Applicable |

# O-11: Firm Order Confirmation and Reject Response Completeness



## Definition

A response is expected from BellSouth for every Local Service Request transaction (version). Firm Order Confirmation and Reject Response Completeness is the corresponding number of Local Service Requests received to the combination of Firm Order Confirmation and Reject Responses.

## Exclusions

- Service Requests canceled by the CLEC prior to FOC or Rejected/Clarified
- Fatal Rejects
- LSRs identified as "Projects"

## Business Rules

**Mechanized –** The number of FOCs or Auto Clarifications sent to the CLEC from EDI, or TAG in response to electronically submitted LSRs.

**Partially Mechanized –** The number of FOCs or Rejects sent to the CLEC from EDI, or TAG in response to electronically submitted LSRs which fall out for manual handling by the LCSC personnel.

**Non-Mechanized:** The number of FOCs or Rejects sent to the CLECs by FAX server.

**Interconnection Trunks:** Interconnection Trunks are ordered on Access Service Requests (ASRs). ASRs are submitted to and processed by the Local Interconnection Service Center (LISC). Trunk data is reported as a separate category.

**For CLEC Results**:

Percent responses is determined by computing the number of Firm Order Confirmations and Rejects transmitted by BellSouth and dividing by the number of Local Service Requests (all versions) received in the reporting period.

## Calculation

**Firm Order Confirmation / Reject Response Completeness** = (a / b) X 100

- a = Total Number of Service Requests for which a Firm Order Confirmation or Reject is Sent
- b = Total Number of Service Requests Received in the Report Period

## Report Structure

Fully Mechanized, Partially Mechanized, Non-Mechanized and Interconnection Trunks

- State and Region
- CLEC Specific
- CLEC Aggregate

## Data Retained

### Relating to CLEC Experience

- Report Month
- Total Number of LSRs
- Total Number of rejects

- Total Number of ASRs (Trunks)
- Total Number of FOCs

**Relating to BellSouth Performance**

- Not Applicable

## SQM Disaggregation - Analog/Benchmark

| SQM Level of Disaggregation | SQM Analog/Benchmark |
|---|---|
| Resale Residence | 95% Returned |
| Resale Business | |
| Resale Design (Special) | |
| Resale PBX | |
| Resale Centrex | |
| Resale ISDN | |
| LNP (Standalone) | |
| INP (Standalone) | |
| 2W Analog Loop Design | |
| 2W Analog Loop Non-Design | |
| 2W Analog Loop with INP Design | |
| 2W Analog Loop with INP Non-Design | |
| 2W Analog Loop with LNP Design | |
| 2W Analog Loop with LNP Non-Design | |
| UNE Digital Loop < DS1 | |
| UNE Digital Loop >= DS1 | |
| UNE Loop + Port Combinations | |
| UNE Combination Other | |
| UNE ISDN Loop | |
| UNE Other Design | |
| UNE Other Non-Design | |
| UNE Line Splitting | |
| EELs | |
| Switch Ports | |
| UNE xDSL (ADSL, HDSL, UCL) | |
| Line Sharing | |
| Local Interoffice Transport | |
| Local Interconnection Trunks | |

## SEEM Measure

| SEEM | Tier I | Tier II |
|---|---|---|
| Yes | X | X |

## SEEM Disaggregation - Analog/Benchmark

| SEEM Disaggregation | SEEM Analog/Benchmark |
|---|---|
| Fully Mechanized | 95% Returned |
| Partially Mechanized | |
| Non-Mechanized | |
| Local Interconnection Trunks | |

# O-12: Speed of Answer in Ordering Center

## Definition

Measures the average time a customer is in queue.

## Exclusions

None

## Business Rules

The clock starts when the appropriate option is selected (i.e., 1 for Resale Consumer, 2 for Resale Multiline, and 3 for UNE-LNP, etc.) and the call enters the queue for that particular group in the LCSC. The clock stops when a BellSouth service representative in the LCSC answers the call. The speed of answer is determined by measuring and accumulating the elapsed time from the entry of a CLEC call into the BellSouth automatic call distributor (ACD) until a service representative in BellSouth's Local Carrier Service Center (LCSC) answers the CLEC call.

## Calculation

**Speed of Answer in Ordering Center** = (a / b)

- a = Total seconds in queue
- b = Total number of calls answered in the Reporting Period

## Report Structure

Aggregate

- CLEC – Local Carrier Service Center
- BellSouth
  - Business Service Center
- Geographic Scope
  - Region

## Data Retained

### Relating to CLEC Experience

- Mechanized Tracking Through LCSC Automatic Call Distributor

### Relating to BellSouth Performance

- Mechanized Tracking Through BellSouth Retail Center Support System

## SQM Disaggregation - Analog/Benchmark

| SQM Level of Disaggregation | SQM Analog/Benchmark |
|---|---|
| Aggregate | |
| • CLEC – Local Carrier Service Center | Parity with Retail (Business Service Center) |

## SEEM Measure

| SEEM | Tier I | Tier II |
|---|---|---|
| Yes | | X |

## SEEM Disaggregation - Analog/Benchmark

| SEEM Disaggregation | SEEM Analog/Benchmark |
|---|---|
| • CLEC - Local Carrier Service Center | Parity with Retail (Business Service Center) |

# Section 3: Provisioning

## P-1: Mean Held Order Interval & Distribution Intervals



### Definition

When delays occur in completing CLEC orders, the average period that CLEC orders are held for BellSouth reasons, pending a delayed completion, should be no worse for the CLEC when compared to BellSouth delayed orders. Calculation of the interval is the total days orders are held and pending but not completed that have passed the currently committed due date; divided by the total number of held orders. This report is based on orders still pending, held and past their committed due date. The distribution interval is based on the number of orders held and pending but not completed over 15 and 90 days. (Orders reported in the >90 day interval are also included in the >15 day interval.)

### Exclusions

- Order Activities of BellSouth or the CLEC associated with internal or administrative use of local services (Record Orders, Listing Orders, Test Orders, etc.) Test order types may be C, N, R, or T
- Disconnect (D) & From (F) orders
- Orders with Appointment Code of 'A', i.e., orders for locations requiring special construction including locations where no address exists and a technician must make a field visit to determine how to get facilities to the location.

### Business Rules

**Mean Held Order Interval:** This metric is computed at the close of each report period. The held order interval is established by first identifying all orders, at the close of the reporting interval, that both have not been reported as completed in SOCS and have passed the currently committed due date for the order and identifying all orders that have been reported as completed in SOCS after the currently committed due date for the order. For each such order, the number of calendar days between the earliest committed due date on which BellSouth had a company missed appointment and the close of the reporting period is established and represents the held order interval for that particular order. The held order interval is accumulated by the standard groupings, unless otherwise noted, and the reason for the order being held. The total number of days accumulated in a category is then divided by the number of held orders within the same category to produce the mean held order interval. The interval is by calendar days with no exclusions for Holidays or Sundays.

CLEC Specific reporting is by type of held order (facilities, equipment, other), total number of orders held, and the total and average days.

**Held Order Distribution Interval:** This measure provides data to report total days held and identifies these in categories of >15 days and > 90 days. (Orders counted in >90 days are also included in > 15 days).

### Calculation

**Mean Held Order Interval** = a / b

- a = Sum of held-over-days for all Past Due Orders Held with a BellSouth Missed Appointment from the earliest BellSouth missed appointment
- b = Number of Past Due Orders Held and Pending But Not Completed and past the committed due date

**Held Order Distribution Interval** (for each interval) = (c / d) X 100

- c = # of Orders Held for >= 15 days or # of Orders Held for >= 90 days
- d = Total # of Past Due Orders Held and Pending But Not Completed)

## Report Structure

- CLEC Specific
- CLEC Aggregate
- BellSouth Aggregate
- Circuit Breakout < 10, >= 10 (except trunks)
- Dispatch/Non-Dispatch
- Geographic Scope
  - State
  - Region

## Data Retained

### Relating to CLEC Experience

- Report Month
- CLEC Order Number and PON (PON)
- Order Submission Date (TICKET_ID)
- Committed Due Date (DD)
- Service Type (CLASS_SVC_DESC)
- Hold Reason
- Total Line/Circuit Count
- Geographic Scope

**Note**: Code in parentheses is the corresponding header found in the raw data file.

### Relating to BellSouth Performance

- Report Month
- BellSouth Order Number
- Order Submission Date
- Committed Due Date
- Service Type
- Hold Reason
- Total Line/Circuit Count
- Geographic Scope

## SQM Disaggregation - Analog/Benchmark

| SQM Level of Disaggregation | SQM Analog/Benchmark |
|---|---|
| Resale Residence | Retail Residence |
| Resale Business | Retail Business |
| Resale Design | Retail Design |
| Resale PBX | Retail PBX |
| Resale Centrex | Retail Centrex |
| Resale ISDN | Retail ISDN |
| LNP (Standalone) | Retail Residence and Business (POTS) |
| INP (Standalone) | Retail Residence and Business (POTS) |
| 2W Analog Loop Design | Retail Residence and Business Dispatch |
| 2W Analog Loop Non-Design | Retail Residence and Business – (POTS Excluding Switch-Based Orders) |
| 2W Analog Loop with LNP - Design | Retail Residence and Business Dispatch |
| 2W Analog Loop with LNP- Non-Design | Retail Residence and Business – (POTS Excluding Switch-Based Orders) |
| 2W Analog Loop with INP-Design | Retail Residence and Business Dispatch |
| 2W Analog Loop with INP-Non-Design | Retail Residence and Business – (POTS Excluding Switch-Based Orders) |

- UNE Digital Loop < DS1 ..... Retail Digital Loop < DS1
- UNE Digital Loop >= DS1 ..... Retail Digital Loop >= DS1
- UNE Loop + Port Combinations ..... Retail Residence and Business
  - Dispatch In ..... - Dispatch
  - Switch Based ..... - Switched Based
- UNE Switch Ports ..... Retail Residence and Business (POTS)
- UNE Combo Other ..... Retail Residence, Business and Design Dispatch
- UNE xDSL (HDSL, ADSL and UCL) ..... ADSL Provided to Retail
- UNE ISDN (Includes UDC) ..... Retail ISDN - BRI
- UNE Line Sharing ..... ADSL Provided to Retail
- UNE Other Design ..... Retail Design
- UNE Other Non-Design ..... Retail Residence and Business
- Local Transport (Unbundled Interoffice Transport) ..... Retail DS1/DS3 Interoffice
- Local Interconnection Trunks ..... Parity with Retail
- UNE Line Splitting ..... ADSL to Retail
- EELs ..... Retail DS1/DS3

## SEEM Measure

| SEEM | Tier I | Tier II |
|---|---|---|
| No | | |

## SEEM Disaggregation - Analog/Benchmark

| SEEM Disaggregation | SEEM Analog/Benchmark |
|---|---|
| • Not Applicable | Not Applicable |

## P-2: Average Jeopardy Notice Interval & Percentage of Orders Given Jeopardy Notices

**(Deleted)**

# P-2A: Jeopardy Notice Interval



## Definition

When BellSouth can determine in advance that a committed due date is in jeopardy for facility delay, it will provide advance notice to the CLEC.

The interval is from the date/time the notice is released to the CLEC/BellSouth systems until 5pm on the due date of the order.

## Exclusions

- Orders held for CLEC end user reasons
- Disconnect (D) and From (F) orders
- Orders with Jeopardy Notice when jeopardy is identified on the due date. This exclusion only applies when the technician on premises has attempted to provide service but must refer to Engineer or Cable Repair for facility jeopardy.
- Orders issued with a due date of < = 48 hours.

## Business Rules

When BellSouth can determine in advance that a committed due date is in jeopardy for facility delay, it will provide advance notice to the CLEC. The number of committed orders in a report period is the number of orders that have a due date in the reporting period. Jeopardy notices for interconnection trunk results are usually zero as these trunks seldom experience facility delays. The Committed Due Date is considered the Confirmed Due Date. This report measures dispatched orders only. If an order is originally sent as non-dispatch and it is determined there is a facility delay, the order is converted to a dispatch code so the facility problem can be corrected. It will remain coded dispatched until completion.

## Calculation

**Jeopardy Interval** = a - b

- a = Date and Time of Scheduled Due Date on Service Order
- b = Date and Time of Jeopardy Notice

**Average Jeopardy Interval** = c / d

- c = Sum of all Jeopardy Intervals
- d = Number of Orders Notified of Jeopardy in Reporting Period

## Report Structure

- CLEC Specific
- CLEC Aggregate
- BellSouth Aggregate
- Mechanized Orders
- Non-Mechanized Orders
- Dispatch/Non-Dispatch
- Geographic Scope
  - State
  - Region

## Data Retained

### Relating to CLEC Experience

- Report Month
- CLEC Order Number and PON

- Date and Time Jeopardy Notice Sent
- Committed Due Date
- Service Type

**Relating to BellSouth Performance**

- Report Month
- BellSouth Order Number
- Date and Time Jeopardy Notice Sent
- Committed Due Date
- Service Type

## SQM Disaggregation - Analog/Benchmark

| SQM Level of Disaggregation | SQM Analog/Benchmark |
|---|---|
| • Resale Residence | 95% > = 48 hours |
| • Resale Business | 95% > = 48 hours |
| • Resale Design | 95% > = 48 hours |
| • Resale PBX | 95% > = 48 hours |
| • Resale Centrex | 95% > = 48 hours |
| • Resale ISDN | 95% > = 48 hours |
| • LNP (Standalone) | 95% > = 48 hours |
| • INP (Standalone) | 95% > = 48 hours |
| • 2W Analog Loop Design | 95% > = 48 hours |
| • 2W Analog Loop Non-Design | 95% > = 48 hours |
| • 2W Analog Loop with LNP - Design | 95% > = 48 hours |
| • 2W Analog Loop with LNP- Non-Design | 95% > = 48 hours |
| • 2W Analog Loop with INP-Design | 95% > = 48 hours |
| • 2W Analog Loop with INP-Non-Design | 95% > = 48 hours |
| • UNE Digital Loop < DS1 | 95% > = 48 hours |
| • UNE Digital Loop >= DS1 | 95% > = 48 hours |
| • UNE Loop + Port Combinations | 95% > = 48 hours |
| - Dispatch In | - Dispatch In |
| - Switch Based | - Switch Based |
| • UNE Switch Ports | 95% > = 48 hours |
| • UNE Combo Other | 95% > = 48 hours |
| • UNE xDSL (HDSL, ADSL and UCL) | 95% > = 48 hours |
| • UNE ISDN (Includes UDC) | 95% > = 48 hours |
| • UNE Line Sharing | 95% > = 48 hours |
| • UNE Other Design | 95% > = 48 hours |
| • UNE Other Non-Design | 95% > = 48 hours |
| • Local Transport (Unbundled Interoffice Transport) | 95% > = 48 hours |
| • Local Interconnection Trunks | 95% > = 48 hours |
| • UNE Line Splitting | 95% > = 48 hours |
| • EELs | 95% > = 48 hours |

## SEEM Measure

| SEEM | Tier I | Tier II |
|---|---|---|
| No | | |

| SEEM Disaggregation | SEEM Analog/Benchmark |
|---|---|
| • Not Applicable | Not Applicable |

# P-2B: Percentage of Orders Given Jeopardy Notices

## Definition

When BellSouth can determine in advance that a committed due date is in jeopardy for facility delay, it will provide advance notice to the CLEC.

The Percent of Orders is the percentage of orders given jeopardy notices for facility delay in the count of orders confirmed in the report period.

## Exclusions

- Orders held for CLEC end user reasons
- Disconnect (D) and From (F) orders

## Business Rules

When BellSouth can determine in advance that a committed due date is in jeopardy for facility delay, it will provide advance notice to the CLEC. The number of committed orders in a report period is the number of orders that have a due date in the reporting period. Jeopardy notices for interconnection trunks results are usually zero as these trunks seldom experience facility delays. The Committed due date is considered the Confirmed due date. This report measures dispatched orders only. If an order is originally sent as non-dispatch and it is determined there is a facility delay, the order is converted to a dispatch code so the facility problem can be corrected. It will remain coded dispatched until completion.

## Calculation

**Percent of Orders Given Jeopardy Notice** = (a / b) X 100

- a = Number of Orders Given Jeopardy Notices in Reporting Period
- b = Number of Orders Confirmed (due) in Reporting Period

**Percent of Orders Given Jeopardy Notice > =** 48 hours = (c / d) X 100

- c = Number of Orders Given Jeopardy Notice >= 48 hours in Reporting Period (electronic only)
- d = Number of Orders Given Jeopardy Notices in Reporting Period (electronic only)

## Report Structure

- CLEC Specific
- CLEC Aggregate
- BellSouth Aggregate
- Mechanized Orders
- Non-Mechanized Orders
- Dispatch/Non-Dispatch
- Geograhic Scope
  - State
  - Region

## Data Retained

### Relating to CLEC Experience

- Report Month
- CLEC Order Number and PON

- Date and Time Jeopardy Notice sent
- Committed Due Date
- Service Type

**Relating to BellSouth Performance**

- Report Month
- BellSouth Order Number
- Date and Time Jeopardy Notice sent
- Committed Due Date
- Service Type

## SQM Disaggregation - Analog/Benchmark

| SQM Level of Disaggregation | SQM Analog/Benchmark |
|---|---|
| • Resale Residence | Retail Residence |
| • Resale Business | Retail Business |
| • Resale Design | Retail Design |
| • Resale PBX | Retail PBX |
| • Resale Centrex | Retail Centrex |
| • Resale ISDN | Retail ISDN |
| • LNP (Standalone) | Retail Residence and Business (POTS) |
| • INP (Standalone) | Retail Residence and Business (POTS) |
| • 2W Analog Loop Design | Retail Residence and Business Dispatch |
| • 2W Analog Loop Non-Design | Retail Residence and Business – (POTS Excluding Switch-Based Orders) |
| • 2W Analog Loop with LNP - Design | Retail Residence and Business Dispatch |
| • 2W Analog Loop with LNP - Non-Design | Retail Residence and Business – (POTS Excluding Switch-Based Orders) |
| • 2W Analog Loop with INP-Design | Retail Residence and Business Dispatch |
| • 2W Analog Loop with INP-Non-Design | Retail Residence and Business – (POTS Excluding Switch-Based Orders) |
| • UNE Digital Loop <DS1 | Retail Digital Loop <DS1 |
| • UNE Digital Loop >=DS1 | Retail Digital Loop >=DS1 |
| • UNE Loop + Port Combinations | Retail Residence and Business |
| - Dispatch In | - Dispatch In |
| - Switch Based | - Switch Based |
| • UNE Switch Ports | Retail Residence and Business (POTS) |
| • UNE Combo Other | Retail Residence, Business and Design Dispatch |
| • UNE xDSL (HDSL, ADSL and UCL) | ADSL Provided to Retail |
| • UNE ISDN (Includes UDC) | Retail ISDN - BRI |
| • UNE Line Sharing | ADSL Provided to Retail |
| • UNE Other Design | Retail Design |
| • UNE Other Non-Design | Retail Residence and Business |
| • Local Transport (Unbundled Interoffice Transport) | Retail DS1/DS3 Interoffice |
| • Local Interconnection Trunks | Parity with Retail |
| • UNE Line Splitting | ADSL Provided to Retail |
| • EELs | Retail DS1/DS3 |

## SEEM Measure

| SEEM | Tier I | Tier II |
|---|---|---|
| No | | |

| SEEM Disaggregation | SEEM Analog/Benchmark |
|---|---|
| • Not Applicable | Not Applicable |

# P-3: Percent Missed Initial Installation Appointments

## Definition

"Percent missed initial installation appointments" monitors the reliability of BellSouth commitments with respect to committed due dates to assure that the CLEC can reliably quote expected due dates to their retail customer as compared to BellSouth. This measure is the percentage of total orders processed for which BellSouth is unable to complete the service orders on the committed due dates and reported for Total misses and End User Misses.

## Exclusions

- Orders canceled prior to the due date including orders that are to be provisioned on the same day they are placed. ("Zero Due Date Orders")
- Order Activities of BellSouth or the CLEC associated with internal or administrative use of local services (Record Orders, Listing Orders Test Orders, etc., Order types may be coded C, N, R or T)
- Disconnect (D) & From (F) orders
- End User Misses

## Business Rules

Percent Missed Initial Installation Appointments (PMI) is the percentage of orders with completion dates in the reporting period that are past the original committed due date. Missed Appointments caused by end-user reasons will be excluded and reported separately. The first commitment date on the service order that is a missed appointment is the missed appointment code used for calculation whether it is a BellSouth missed appointment or an End User missed appointment. The "due date" is any time on the confirmed due date. Which means there cannot be a cutoff time for commitments, as certain types of orders are requested to be worked after standard business hours. Also, during Daylight Savings Time, field technicians are scheduled until 9PM in some areas and the customer is offered a greater range of intervals from which to select.

## Calculation

**Percent Missed Installation Appointments** = (a / b) X 100

- a = Number of Orders with Completion date in Reporting Period past the Original Committed Due Date
- b = Number of Orders Completed in Reporting Period

## Report Structure

- CLEC Specific
- CLEC Aggregate
- BellSouth Aggregate
- Report in Categories of <10 lines/circuits >= 10 lines/circuits (except trunks)
- Dispatch/Non-Dispatch (except Trunks)
- Geographic Scope
  - State
  - Region

## Data Retained

### Relating to CLEC Experience

- Report Month
- CLEC Order Number and PON (PON)
- Committed Due Date (DD)

- Completion Date (CMPLTN DD)
- Status Type
- Status Notice Date
- Standard Order Activity

**Note:** Code in parentheses is the corresponding header found in the raw data file.

### Relatng to BellSouth Performance

- Report Month
- BellSouth Order Number
- Committed Due Date (DD)
- Completion Date (CMPLTN DD)
- Status Type
- Status Notice Date
- Standard Order Activity

## SQM Disaggregation - Analog/Benchmark

| SQM Level of Disaggregation | SQM Analog/Benchmark |
|---|---|
| Resale Residence | Retail Residence |
| Resale Business | Retail Business |
| Resale Design | Retail Design |
| Resale PBX | Retail PBX |
| Resale Centrex | Retail Centrex |
| Resale ISDN | Retail ISDN |
| LNP (Standalone) | Retail Residence and Business (POTS) |
| INP (Standalone) | Retail Residence and Business (POTS) |
| 2W Analog Loop Design | Retail Residence and Business Dispatch |
| 2W Analog Loop Non-Design | Retail Residence and Business – (POTS Excluding Switch- Based Orders) |
| 2W Analog Loop With LNP - Design | Retail Residence and Business Dispatch |
| 2W Analog Loop With LNP- Non-Design | Retail Residence and Business – (POTS Excluding Switch-Based Orders) |
| 2W Analog Loop With INP-Design | Retail Residence and Business Dispatch |
| 2W Analog Loop With INP-Non-Design | Retail Residence and Business – (POTS Excluding Switch-Based Orders) |
| UNE Digital Loop < DS1 | Retail Digital Loop < DS1 |
| UNE Digital Loop >= DS1 | Retail Digital Loop >= DS1 |
| UNE Loop + Port Combinations | Retail Residence and Business |
| - Dispatch In | - Dispatch In |
| - Switch Based | - Switched Based |
| UNE Switch Ports | Retail Residence and Business (POTS) |
| UNE Combo Other | Retail Residence, Business and Design Dispatch |
| UNE xDSL (HDSL, ADSL and UCL) | ADSL Provided to Retail |
| - Without Conditioning | - Without Conditioning |
| - With Conditioning | - With Conditioning (BellSouth does not offer this service to Retail) |
| UNE ISDN | Retail ISDN - BRI |
| UNE Line Sharing Without Conditioning | ADSL Provided to Retail |
| With Conditioning | ADSL Provided to Retail |
| UNE Other Design | Retail Design |
| UNE Other Non-Design | Retail Residence and Business |
| Local Transport (Unbundled Interoffice Transport) | Retail DS1/DS3 Interoffice |
| Local Interconnection Trunks | Parity with Retail |
| UNE Line Splitting Without Conditioning | ADSL Provided to Retail |
| With Conditioning | ADSL Provided to Retail |
| EELs | Retail DS1/DS3 |
| UNE UDC/IDSL | Retail ISDN - BRI |

## SEEM Measure

| SEEM | Tier I | Tier II |
|---|---|---|
| Yes | X | X |

## SEEM Disaggregation - Analog/Benchmark

| SEEM Disaggregation | SEEM Analog/Benchmark |
|---|---|
| • Resale Residence | Retail Residence |
| • Resale Business | Retail Business |
| • Resale Design | Retail Design |
| • Resale PBX | Retail PBX |
| • Resale Centrex | Retail Centrex |
| • Resale ISDN | Retail ISDN |
| • LNP (Standalone) | Retail Residence and Business (POTS) |
| • INP (Standalone) | Retail Residence and Business (POTS) |
| • 2W Analog Loop Design | Retail Residence and Business Dispatch |
| • 2W Analog Loop Non-Design | Retail Residence and Business – (POTS Excluding Switch-Based Orders) |
| • 2W Analog Loop With LNP - Design | Retail Residence and Business Dispatch |
| • 2W Analog Loop With LNP- Non-Design | Retail Residence and Business – (POTS Excluding Switch-Based Orders) |
| • 2W Analog Loop With INP-Design | Retail Residence and Business Dispatch |
| • 2W Analog Loop With INP-Non-Design | Retail Residence and Business – (POTS Excluding Switch-Based Orders) |
| • UNE Digital Loop < DS1 | Retail Digital Loop < DS1 |
| • UNE Digital Loop >= DS1 | Retail Digital Loop >=DS1 |
| • UNE Loop + Port Combinations | Retail Residence and Business |
| - Dispatch In | - Dispatched In |
| - Switch Based | - Switch Based |
| • UNE Switch Ports | Retail Residence and Business (POTS) |
| • UNE Combo Other | Retail Residence, Business and Design Dispatch |
| • UNE xDSL (HDSL, ADSL and UCL) | ADSL Provided to Retail |
| - Without Conditioning | - Without Conditioning |
| - With Conditioning | - With Conditioning (BellSouth does not offer this service to Retail) |
| • UNE ISDN | Retail ISDN - BRI |
| • UNE Line Sharing Without Conditioning | ADSL Provided to Retail |
| With Conditioning | ADSL Provided to Retail |
| • Local Transport (Unbundled Interoffice Transport) | Retail DS1/DS3 Interoffice |
| • Local Interconnection Trunks | Parity with Retail |
| • UNE Line Splitting Without Conditioning | ADSL Provided to Retail |
| • With Conditioning | ADSL Provided to Retail |
| • UNE Other Design | Retail Design |
| • UNE Other Non-Design | Retail Residence and Business |
| • EELs | Retail DS1/DS3 |
| • UNE UDC/IDSL | Retail ISDN - BRI |

## P-3A: Percent Missed Installation Appointments Including Subsequent Appointments

**(Deleted)**

# P-4: Average Completion Interval (OCI) & Order Completion Interval Distribution

## Definition

The "average completion interval" measure monitors the interval of time it takes BellSouth to provide service for the CLEC or its own customers. The "Order Completion Interval Distribution" provides the percentages of orders completed within certain time periods. This report measures how well BellSouth meets the interval offered to customers on service orders.

## Exclusions

- Canceled Service Orders
- Order Activities of BellSouth or the CLEC associated with internal or administrative use of local services (Record Orders, Listing Orders, Test Orders, etc.)
- Disconnect (D & F) orders (Except "D" orders associated with LNP Standalone)
- "L" Appointment coded orders (where the customer has requested a later than offered interval)
- End user-caused misses

## Business Rules

The actual completion interval is determined for each order processed during the reporting period. The completion interval is the elapsed time from when BellSouth issues a FOC or SOCS date time stamp receipt of an order from the CLEC to BellSouth's actual order completion date. The clock starts when a valid order number is assigned by SOCS and stops when the technician or system completes the order in SOCS. Elapsed time for each order is accumulated for each reporting dimension. The accumulated time for each reporting dimension is then divided by the associated total number of orders completed. Orders that are worked on zero due dates are calculated with a .33-day interval (8 hours) in order to report a portion of a day interval. These orders are issued and worked/completed on the same day. They can be either flow through orders (no field work-non-dispatched) or field orders (dispatched).

The interval breakout for UNE and Design is: 0-5 = 0-< 5, 5-10 = 5-<10, 10-15 = 10-< 15, 15-20 = 15- < 20, 20-25 = 20-< 25, 25-30 = 25-< 30, >= 30 = 30 and greater.

## Calculation

**Completion Interval** = (a - b)

- a = Completion Date
- b = FOC/SOCS date time-stamp (application date)

**Average Completion Interval** = (c / d)

- c = Sum of all Completion Intervals
- d = Count of Orders Completed in Reporting Period

**Order Completion Interval Distribution** (for each interval) = (e / f) X 100

- e = Service Orders Completed in "X" days
- f = Total Service Orders Completed in Reporting Period

## Report Structure

- CLEC Specific
- CLEC Aggregate
- BellSouth Aggregate
- Dispatch/Non-Dispatch categories applicable to all levels except trunks
- Residence and Business reported in day intervals = 0,1,2,3,4,5,5+
- UNE and Design reported in day intervals =0-5,5-10,10-15,15-20,20-25,25-30, >= 30
- All Levels are reported <10 line/circuits; >= 10 line/circuits (except trunks)

- Geographic Scope
  - State
  - Region

## Data Retained

### Relating to CLEC Experience

- Report Month
- CLEC Company Name
- Order Number (PON)
- Application Date and Time
- Completion Date (CMPLTN_DT)
- Service Type (CLASS_SVC_DESC)
- Geographic Scope

**Note:** Code in parentheses is the corresponding header found in the raw data file.

### Relating to BellSouth Performance

- Report Month
- BellSouth Order Number
- Order Submission Date and Time
- Order Completion Date and Time
- Service Type
- Geographic Scope

## SQM Disaggregation - Analog/Benchmark

| SQM Level of Disaggregation | SQM Analog/Benchmark |
|---|---|
| • Resale Residence | Retail Residence |
| • Resale Business | Retail Business |
| • Resale Design | Retail Design |
| • Resale PBX | Retail PBX |
| • Resale Centrex | Retail Centrex |
| • Resale ISDN | Retail ISDN |
| • LNP (Standalone) | Retail Residence and Business (POTS) |
| • INP (Standalone) | Retail Residence and Business (POTS) |
| • 2W Analog Loop Design | Retail Residence and Business Dispatch |
| • 2W Analog Loop Non-Design | Retail Residence and Business – (POTS Excluding Switch-Based Orders) |
| • 2W Analog Loop with LNP - Design | Retail Residence and Business Dispatch |
| • 2W Analog Loop with LNP- Non-Design | Retail Residence and Business – (POTS Excluding Switch-Based Orders) |
| • 2W Analog Loop with INP-Design | Retail Residence and Business Dispatch |
| • 2W Analog Loop with INP-Non-Design | Retail Residence and Business – (POTS Excluding Switch-Based Orders) |
| • UNE Digital Loop < DS1 | Retail Digital Loop < DS1 |
| • UNE Digital Loop >= DS1 | Retail Digital Loop >= DS1 |
| • UNE Loop + Port Combinations | Retail Residence and Business |
| - Dispatch In | - Dispatch In |
| - Switch Based | - Switch Based |
| • UNE Switch Ports | Retail Residence and Business (POTS) |
| • UNE Combo Other | Retail Residence, Business and Design Dispatch |
| • UNE xDSL (HDSL, ADSL and UCL) | |
| - Without Conditioning | - <= 5 Days |
| - With Conditioning | - <= 12 Days |
| • UNE ISDN | Retail ISDN - BRI |
| • UNE Line Sharing Without Conditioning | ADSL Provided to Retail |

With Conditioning ..... <= 12 Days
- Local Transport (Unbundled Interoffice Transport) ..... Retail DS1/DS3 Interoffice
- Local Interconnection Trunks ..... Parity with Retail
- UNE Line Splitting Without Conditioning ..... ADSL Provided to Retail
- With Conditioning ..... <= 12 Days
- UNE Other Design ..... Retail Design
- UNE Other Non-Design ..... Retail Residence and Business
- EELs ..... Retail DS1/DS3
- UNE UDC/IDSL ..... Retail ISDN - BRI

## SEEM Measure

| SEEM | Tier I | Tier II |
|---|---|---|
| Yes | X | X |

## SEEM Disaggregation - Analog/Benchmark

| SEEM Disaggregation | SEEM Analog/Benchmark |
|---|---|
| Resale Residence | Retail Residence |
| Resale Business | Retail Business |
| Resale Design | Retail Design |
| Resale PBX | Retail PBX |
| Resale Centrex | Retail Centrex |
| Resale ISDN | Retail ISDN |
| LNP (Standalone) | Retail Residence and Business (POTS) |
| INP (Standalone) | Retail Residence and Business (POTS) |
| 2W Analog Loop Design | Retail Residence and Business Dispatch |
| 2W Analog Loop Non-Design | Retail Residence and Business – (POTS Excluding Switch-Based Orders) |
| 2W Analog Loop with LNP - Design | Retail Residence and Business Dispatch |
| 2W Analog Loop with LNP- Non-Design | Retail Residence and Business – (POTS Excluding Switch-Based Orders) |
| 2W Analog Loop with INP-Design | Retail Residence and Business Dispatch |
| 2W Analog Loop with INP-Non-Design | Retail Residence and Business – (POTS Excluding Switch-Based Orders) |
| UNE Digital Loop < DS1 | Retail Digital Loop < DS1 |
| UNE Digital Loop >= DS1 | Retail Digital Loop >=DS1 |
| UNE Loop + Port Combinations | Retail Residence and Business |
| - Dispatch In | - Dispatch In |
| - Switch Based | - Switch Based |
| UNE Switch Ports | Retail Residence and Business (POTS) |
| UNE Combo Other | Retail Residence, Business and Design Dispatch |
| UNE xDSL (HDSL, ADSL and UCL) | |
| - Without Conditioning | - <= 5 Days |
| - With Conditioning | - <= 12 Days |
| UNE ISDN | Retail ISDN - BRI |
| UNE Line Sharing Without Conditioning | ADSL Provided to Retail |
| With Conditioning | <= 12 Days |
| Local Transport (Unbundled Interoffice Transport) | Retail DS1/DS3 Interoffice |
| Local Interconnection Trunks | Parity with Retail |
| UNE Line Splitting Without Conditioning | ADSL Provided to Retail |
| With Conditioning | <= 12 Days |
| UNE Other Design | Retail Design |
| UNE Other Non-Design | Retail Residence and Business |
| EELs | Retail DS1/DS3 |
| UNE UDC/IDSL | Retail ISDN/BRI |

## P-4A: Average Order Completion and Completion Notice Interval (AOCCNI) Distribution

**(Deleted)**

# P-5: Average Completion Notice Interval

## Definitions

The Completion Notice Interval is the elapsed time between the BellSouth reported completion of work and the issuance of a valid completion notice to the CLEC.

## Exclusions

- Canceled Service Orders
- Order Activities of BellSouth or the CLEC associated with internal or administrative use of local services (Record Orders, Listing Orders, Test Orders, etc.) Test order types may be C, N, R, or T.
- D & F orders (Exception: "D" orders associated with LNP Standalone)

## Business Rules

Measurement on interval of completion date and time entered by a field technician on dispatched orders, and 5PM start time on the due date for non-dispatched orders; to the release of a notice to the CLEC/BellSouth of the completion status. The field technician notifies the CLEC the work was complete and then he/she enters the completion time stamp information in his/her computer. This information switches through to the SOCS systems either completing the order or rejecting the order to the Work Management Center (WMC). If the completion is rejected, it is manually corrected and then completed by the WMC. The notice is returned on each individual order.

The start time for all orders is the completion stamp either by the field technician or the 5PM due date stamp; the end time for mechanized orders is the time stamp the notice was delivered to the CLEC interface (LENS, EDI, OR TAG). For non-mechanized orders-the end time will be date and timestamp of order update from the FAX record via LON or C-SOTS system. For the retail analog, the start time is when the technician completes the order and the end time is when the order status is changed to complete in SOCS.

## Calculation

**Completion Notice Interval** = (a - b)

- a = Date and Time of Notice of Completion
- b = Date and Time of Work Completion

**Average Completion Notice Interval** = c / d

- c = Sum of all Completion Notice Intervals
- d = Number of Orders with Notice of Completion in Reporting Period

## Report Structure

- CLEC Specific
- CLEC Aggregate
- BellSouth Aggregate
- Mechanized Orders
- Non-Mechanized Orders
- Dispatch/Non-Dispatch
- Reporting intervals in Hours; 0,1- <= 2, > 2 - <= 4, > 4 - <= 8, > 8 - <= 12, > 12- <= 24, > 24 plus Overall Average Hour Interval
- Reported in categories of <10 line / circuits; >= 10 line/circuits (except trunks)
- Geographic Scope
  - State
  - Region

## Data Retained

### Relating to CLEC Experience

- Report Month
- CLEC Order Number (so_nbr)
- Work Completion Date (cmpltn_dt)
- Work Completion Time
- Completion Notice Availability Date
- Completion Notice Availability Time
- Service Type
- Geographic Scope

**Note:** Code in parentheses is the corresponding header found in the raw data file.

### Relating to BellSouth Performance

- Report Month
- BellSouth Order Number (so_nbr)
- Work Completion Date (cmpltn_dt)
- Work Completion Time
- Completion Notice Availability Date
- Completion Notice Availability Time
- Service Type
- Geographic Scope

**Note:** Code in parentheses is the corresponding header found in the raw data file.

## SQM Disaggregation - Analog/Benchmark

| SQM Level of Disaggregation | SQM Analog/Benchmark |
|---|---|
| • Resale Residence | Retail Residence |
| • Resale Business | Retail Business |
| • Resale Design | Retail Design |
| • Resale PBX | Retail PBX |
| • Resale Centrex | Retail Centrex |
| • Resale ISDN | Retail ISDN |
| • LNP (Standalone) | Retail Residence and Business (POTS) |
| • INP (Standalone) | Retail Residence and Business (POTS) |
| • 2W Analog Loop Design | Retail Residence and Business Dispatch |
| • 2W Analog Loop Non-Design | Retail Residence and Business – (POTS Excluding Switch-Based Orders) |
| • 2W Analog Loop with LNP - Design | Retail Residence and Business Dispatch |
| • 2W Analog Loop with LNP- Non-Design | Retail Residence and Business - POTS Excluding Switch-Based Orders |
| • 2W Analog Loop with INP-Design | Retail Residence and Business Dispatch |
| • 2W Analog Loop with INP-Non-Design | Retail Residence and Business - POTS Excluding Switch-Based Orders |
| • UNE Digital Loop < DS1 | Retail Digital Loop < DS1 |
| • UNE Digital Loop >= DS1 | Retail Digital Loop >= DS1 |
| • UNE Loop + Port Combinations | Retail Residence and Business |
| - Dispatch In | - Dispatch In |
| - Switch Based | - Switch Based |
| • UNE Switch Ports | Retail Residence and Business (POTS) |
| • UNE Combo Other | Retail Residence, Business and Design Dispatch |
| • UNE xDSL (HDSL, ADSL and UCL) | ADSL Provided to Retail |

- UNE ISDN (Includes UDC) ..... Retail ISDN - BRI
- UNE Line Sharing ..... ADSL Provided to Retail
- Local Transport (Unbundled Interoffice Transport) ..... Retail DS1/DS3 Interoffice
- Local Interconnection Trunks ..... Parity with Retail
- UNE Line Splitting ..... ADSL to Retail
- UNE Other Design ..... Retail Design
- UNE Other Non-Design ..... Retail Residence and Business
- EELs ..... Retail DS1/DS3

## SEEM Measure

| SEEM | Tier I | Tier II |
|---|---|---|
| No | | |

## SEEM Disaggregation - Analog/Benchmark

| SEEM Disaggregation | SEEM Analog/Benchmark |
|---|---|
| • Not Applicable | Not Applicable |

# P-6: % Completions/Attempts without Notice or < 24 hours Notice

## Definition

The purpose of this measure is to report if BellSouth is returning a FOC to the CLEC in time for the CLEC to notify their customer of the scheduled date.

## Exclusions

- Canceled Orders
- Expedited Orders
- "0" dated orders or any request where the subscriber requested an earlier due date of < 24 hours prior to the original commitment date, or any LSR received < 24 hours prior to the original commitment date.

## Business Rules

**For CLEC Results**:

Calculation would exclude any successful or unsuccessful service delivery where the CLEC was informed at least 24 hours in advance. BellSouth may also exclude from calculation any LSRs received from the requesting CLEC with less than 24 hour notice prior to the commitment date.

## Calculation

**Percent Completions or Attempts without Notice or with Less Than 24 Hours Notice** = (a / b) X 100

- a = Completion Dispatches (Successful and Unsuccessful) With No FOC or FOC Received < 24 Hours of Original Committed Due Date
- b = All Completions

## Report Structure

- CLEC Specific
- CLEC Aggregate
- Dispatch /Non-Dispatch
- Total Orders FOC < 24 Hours
- Total Completed Service Orders
- % FOC < 24 Hours
- Geographic Scope
  - State
  - Region

## Data Retained

### Relating to CLEC Experience

- Committed Due Date (DD)
- FOC End Timestamp
- Report Month
- CLEC Order Number and PON

### Relating to BellSouth Performance

- Not Applicable

## SQM Disaggregation - Analog/Benchmark

| SQM Level of Disaggregation | SQM Analog/Benchmark |
|---|---|
| • Resale Residence | <= 5% |
| • Resale Business | |
| • Resale Design | |
| • Resale PBX | |
| • Resale Centrex | |
| • Resale ISDN | |
| • LNP (Standalone) | |
| • INP (Standalone) | |
| • 2W Analog Loop Design | |
| • 2W Analog Loop Non-Design | |
| • 2W Analog Loop Design with LNP | |
| • 2W Analog Loop Non-Design with LNP | |
| • 2W Analog Loop Design with INP | |
| • 2W Analog Loop Non-Design with INP | |
| • UNE Digital Loop < DS1 | |
| • UNE Digital Loop >= DS1 | |
| • UNE Loop + Port Combinations | |
| - Dispatch In | |
| - Switch Based | |
| • UNE Switch Ports | |
| • UNE Combo Other | |
| • UNE xDSL (HDSL, ADSL and UCL) | |
| • UNE ISDN (Includes UDC) | |
| • UNE Line Sharing | |
| • UNE Line Splitting | |
| • Local Transport (Unbundled Interoffice Transport) | |
| • Local Interconnection Trunks | |
| • EELS | |

## SEEM Measure

| SEEM | Tier I | Tier II |
|---|---|---|
| No | | |

## SEEM Disaggregation - Analog/Benchmark

| SEEM Disaggregation | SEEM Analog/Benchmark |
|---|---|
| • Not Applicable | Not Applicable |

P-6: % Completions/Attempts without Notice or < 24 hours Notice

# P-7: Coordinated Customer Conversions Interval

## Definition

This report measures the average time it takes BellSouth to disconnect an unbundled loop from the BellSouth switch and cross connect it to CLEC equipment. This measurement applies to service orders with INP and LNP, and where the CLEC has requested BellSouth to provide a coordinated cutover.

## Exclusions

- Any order canceled by the CLEC will be excluded from this measurement.
- Delays due to CLEC following disconnection of the unbundled loop
- Unbundled Loops where there is no existing subscriber loop and loops where coordination is not requested.

## Business Rules

Where the service order includes LNP, the interval includes the total time for the cutover including the translation time to place the line back in service on the ported line. When the service order includes INP, the interval includes the total time for the cutover including the translation time to place the link back in service on the ported line. The interval is calculated for the entire cutover time for the service order and then divided by items worked in that time to give the average per-item interval for each service order.

## Calculation

**Coordinated Customer Conversions Interval** = (a - b)

- a = Completion Date and Time for Cross Connection of a Coordinated Unbundled Loop
- b = Disconnection Date and Time of an Coordinated Unbundled Loop

**Percent Coordinated Customer Conversions** (for each interval) = (c / d) X 100

- c = Total number of Coordinated Customer Conversions for each interval
- d = Total Number of Unbundled Loop with Coordinated Conversions (items) for the reporting period

## Report Structure

- CLEC Specific
- CLEC Aggregate
- The interval breakout is 0-5 = 0-<=5, 5-15 = >5-<=15, >=15 = 15 and greater, plus Overall Average Interval
- Geographic Scope
  - State
  - Region

## Data Retained

### Relating to CLEC Experience

- Report Month
- CLEC Order Number
- Committed Due Date (DD)
- Service Type (CLASS_SVC_DESC)
- Cutover Start Time
- Cutover Completion time
- Portability Start and Completion Times (INP orders)
- Total Conversions (Items)

**Note:** Code in parentheses is the corresponding header found in the raw data file.

**Relating to BellSouth Performance**

- No BellSouth Analog Exists

## SQM Disaggregation - Analog/Benchmark

| SQM Level of Disaggregation | SQM Analog/Benchmark |
|---|---|
| • Unbundled Loops with INP | 95% <= 15 minutes |
| • Unbundled Loops with LNP | 95% <= 15 minutes |

## SEEM Measure

| SEEM | Tier I | Tier II |
|---|---|---|
| Yes | X | X |

## SEEM Disaggregation - Analog/Benchmark

| SEEM Disaggregation | SEEM Analog/Benchmark |
|---|---|
| • Unbundled Loops With INP | 95% <= 15 minutes |
| • Unbundled Loops With LNP | 95% <= 15 minutes |

# P-7A: Coordinated Customer Conversions – Hot Cut Timeliness % within Interval and Average Interval

## Definition

This category measures whether BellSouth begins the cutover of an unbundled loop on a coordinated and/or a time specific order at the CLEC requested start time. It measures the percentage of orders where the cut begins within 15 minutes of the requested start time of the order and the average interval.

## Exclusions

- Any order canceled by the CLEC will be excluded from this measurement.
- Delays caused by the CLEC
- Unbundled Loops where there is no existing subscriber loop and loops where coordination is not requested.
- All unbundled loops on multiple loop orders after the first loop
- Test Orders

## Business Rules

This report measures whether BellSouth begins the cutover of an unbundled loop on a coordinated and/or a time specific order at the CLEC requested start time. The cut is considered on time if it starts 15 minutes before or after the requested start time. Using the scheduled time and the actual cutover start time, the measurement will calculate the percent within interval and the average interval. If a cut involves multiple lines, the cut will be considered "on time" if the first line is cut within the interval. <= 15 minutes includes intervals that began 15:00 minutes or less before the scheduled cut time and cuts that began 15 minutes or less after the scheduled cut time; >15 minutes, <= 30 minutes includes cuts within 15:00 – 30:00 minutes either prior to or after the scheduled cut time; >30 minutes includes cuts greater than 30:00 minutes either prior to or after the scheduled cut time. If IDLC is involved, a four hour window applies to the start time. (8 A.M. to Noon or 1 P.M. to 5 P.M.) This only applies if BellSouth notifies the CLEC by 10:30 A.M. on the day before the due date that the service is on IDLC.

## Calculation

**% within Interval** = (a / b) X 100

- a = Total Number of Coordinated Unbundled Loop Orders for the interval
- b = Total Number of Coordinated Unbundled Loop Orders for the reporting period

**Interval** = (c - d)

- c = Scheduled Time for Cross Connection of a Coordinated Unbundled Loop Order
- d = Actual Start Date and Time of a Coordinated Unbundled Loop Order

**Average Interval** = (e / f)

- Sum of all Intervals
- Total Number of Coordinated Unbundled Loop Orders for the reporting period.

## Report Structure

- CLEC Specific
- CLEC Aggregate
  Reported in intervals of early, on time and late cuts % <= 15 minutes; % >15 minutes, <= 30 minutes; % >30 minutes, plus Overall Average Interval
- Geographic Scope
  - State
  - Region
- Percentages are reported in intervals of early, on time and late cuts for IDLC and non-IDLC cuts

  On Time (Non-IDLC)
  <= 15 minutes
  Note: This is a 30-minute bucket representing a cut that begins 15 minutes or less before or after the scheduled start time.

  Early (Non-IDLC)
  >15 minutes - <= 30 minutes
  >30 minutes - <= 60 minutes
  >60 minutes - <= 120 minutes
  >120 minutes - <= 180 minutes
  >180 minutes - <= 240 minutes
  <= 240 minutes

  Late (Non-IDLC)
  >15 minutes - <= 30 minutes
  >30 minutes - <= 60 minutes
  >60 minutes - <= 120 minutes
  >120 minutes - <= 180 minutes
  >180 minutes - <= 240 minutes
  >240 minutes
  Overall Average Interval for non-IDLC

  On Time (IDLC)
  <= 2 hours
  Note: This is a 4-hour bucket representing a cut involving IDLC that begins 2 hours or less before or after the scheduled start time

  Early (IDLC)
  >2 hours

  Late (IDLC)
  >2 hours
  Overall Average Interval for IDLC

## Data Retained

### Relating to CLEC Experience

- Report Month
- CLEC Order Number (so_nbr)
- Committed Due Date (DD)
- Service Type (CLASS_SVC_DESC)
- Cutover Scheduled Start Time
- Cutover Actual Start Time
- Total Conversions Orders

**Note:** Code in parentheses is the corresponding header found in the raw data file.

**Relating to BellSouth Performance**

- No BellSouth Analog exists

## SQM Disaggregation - Analog/Benchmark

| SQM Level of Disaggregation | SQM Analog/Benchmark |
|---|---|
| • Product Reporting Level | 95% within + or – 15 Minutes of Scheduled Start Time |
| - SL1 Time Specific | |
| - SL1 Non-Time Specific | |
| - SL2 Time Specific | |
| - SL2 Non-Time Specific | |
| - SL1 IDLC | 95% within 4-Hour Window |
| - SL2 IDLC | |

## SEEM Measure

| SEEM | Tier I | Tier II |
|---|---|---|
| Yes | X | X |

## SEEM Disaggregation - Analog/Benchmark

| SEEM Disaggregation | SEEM Analog/Benchmark |
|---|---|
| - SL1 Time Specific | 95% within + or – 15 Minutes of Scheduled Start Time |
| - SL1 IDLC | |
| - SL1 Non-Time Specific | |
| - SL2 Time Specific | |
| - SL2 Non-Time Specific | 95% within 4-Hour Window |
| - SL2 IDLC | |

# P-7B: Coordinated Customer Conversions – Average Recovery Time

## Definition

Measures the time between notification and resolution by BellSouth of a service outage found that can be isolated to the BellSouth side of the network. The time between notification and resolution by BellSouth must be measured to ensure that CLEC customers do not experience unjustifiable lengthy service outages during a Coordinated Customer Conversion. This report measures outages associated with Coordinated Customer Conversions prior to service order completion.

## Exclusions

- Cutovers where service outages are due to CLEC caused reasons when the CLEC agrees
- Cutovers where service outages are due to end-user caused reasons when the CLEC agrees
- Test Orders

## Business Rules

Measures the outage duration time related to Coordinated Customer Conversions from the initial trouble notification until the trouble has been restored and the CLEC has been notified. The duration time is defined as the time from the initial trouble notification until the trouble has been restored and the CLEC has been notified. The interval is calculated on the total outage time for the circuits divided by the total number of outages restored during the report period to give the average outage duration.

## Calculation

**Recovery Time** = (a - b)

- a = Date and Time That Trouble is Closed by CLEC
- b = Date and Time Initial Trouble is Opened with BellSouth

**Average Recovery Time** = (c / d)

- c = Sum of all the Recovery Times per circuit
- d = Number of Troubles per circuit Referred to BellSouth

## Report Structure

- CLEC Specific
- CLEC Aggregate
- Geographic Scope
  - State
  - Region

## Data Retained

### Relating to CLEC Experience

- Report Month
- CLEC Company Name
- CLEC Order Number (so_nbr)
- Committed Due Date (DD)
- Service Type (CLASS_SVC_DESC)
- CLEC Acceptance Conflict (CLEC_CONFLICT)
- CLEC Conflict Resolved (CLEC_CON_RES)
- CLEC Conflict MFC (CLEC_CONFLICT_MFC)

- Total Conversion Orders

**Note:** Code in parentheses is the corresponding header found in the raw data file.

**Relating to BellSouth Performance**

- None

## SQM Disaggregation - Analog/Benchmark

| SQM Level of Disaggregation | SQM Analog/Benchmark |
|---|---|
| • Unbundled Loops with INP | <= 5 Hours |
| • Unbundled Loops with LNP | <= 5 Hours |

## SEEM Measure

| SEEM | Tier I | Tier II |
|---|---|---|
| No | | |

## SEEM Disaggregation - Analog/Benchmark

| SEEM Disaggregation | SEEM Analog/Benchmark |
|---|---|
| • Not Applicable | Not Applicable |

# P-7C: Hot Cut Conversions - % Provisioning Troubles Received within 7 Days of a Completed Service Order



## Definition

The Percent Provisioning Troubles received within 7 days of a completed service order associated with a Hot Cut Conversion (CCC) measures the quality and accuracy of Coordinated Customer Conversion Activities.

## Exclusions

- Any order cancelled by the CLEC
- Troubles caused by Customer Provided Equipment
- Test Orders

## Business Rules

Measures the quality and accuracy of completed service orders associated with Coordinated and Non-coordinated Customer Conversions. The first trouble report received on a circuit ID within 7 days following a service order completion is counted in this measure. Subsequent trouble reports are measured in Repeat Report Rate. Reports are calculated searching in the prior report period for completed Coordinated Customer Conversion service orders and following 7 days after the completion of the service order for a trouble report issue date.

## Calculation

**% Provisioning Troubles within 7 days of service order completion** = (a / b) X 100

- a = The sum of all CCC Circuits with a trouble within 7 days following service order(s) completion
- b = The total number of CCC service order circuits completed in the previous report calendar month

## Report Structure

- CLEC Specific
- CLEC Aggregate
- Dispatch/Non-Dispatch
- Geographic Scope
  - State
  - Region

## Data Retained

### Relating to CLEC Experience

- Report Month
- CLEC Order Number (so_nbr)
- PON
- Order Submission Date (TICKET_ID)
- Order Submission Time (TICKET_ID)
- Status Type
- Status Notice Date
- Standard Order Activity
- Geographic Scope
- Total Conversion Circuits

**Note:** Code in parentheses is the corresponding header found in the raw data file.

**Relating to BellSouth Performance**

- No BellSouth Analog exists

## SQM Disaggregation - Analog/Benchmark

| SQM Level of Disaggregation | SQM Analog/Benchmark |
|---|---|
| • UNE Loop Design | <= 3% |
| • UNE Loop Non-Design | <= 3% |

## SEEM Measure

| SEEM | Tier I | Tier II |
|---|---|---|
| Yes | X | X |

## SEEM Disaggregation - Analog/Benchmark

| SEEM Disaggregation | SEEM Analog/Benchmark |
|---|---|
| • UNE Loop Design | <= 3% |
| • UNE Loop Non-Design | <= 3% |

# P-8: Cooperative Acceptance Testing - % of xDSL Loops Successfully Passing Cooperative Testing



## Definition

A loop will be considered successfully cooperatively tested when both the CLEC and BellSouth representatives agree that the loop meets the technical specifications set forth in TR 73600.

## Exclusions

- Testing failures due to CLEC (incorrect contact number, CLEC not ready, etc.)
- xDSL lines with no request for cooperative testing
- Test Orders

## Business Rules

When a BellSouth technician finishes delivering an order for an xDSL loop where the CLEC order calls for cooperative testing at the customer's premise, the BellSouth technician is to call a toll free number to the CLEC testing center. The BellSouth technician and the CLEC representative at the center then test the line. As an example of the type of testing performed, the testing center may ask the technician to put a short on the line so that the center can run a test to see if it can identify the short. CLEC caused failures will be captured in the raw data files.

## Calculation

**Cooperative Acceptance Testing - % of xDSL Loops Successfully Tested** = (a / b) X 100

- a = Total number of successful xDSL cooperative tests for xDSL lines where cooperative testing was requested in the reporting period
- b = Total Number of xDSL line tests requested by the CLEC and scheduled in the reporting period

## Report Structure

- CLEC Specific
- CLEC Aggregate
- Type of Loop Tested
- Geographic Scope
  - State
  - Region

## Data Retained

### Relating to CLEC Experience

- Report Month
- CLEC Company Name (OCN)
- CLEC Order Number (so_nbr) and PON (PON)
- Committed Due Date (DD)
- Service Type (CLASS_SVC_DESC)
- Acceptance Testing Completed (ACCEPT_TESTING)
- Acceptance Testing Declined (ACCEPT_TESTING)
- Total xDSL Orders
- Missed Appointments Code (SO_MISSED_CMMT_CD)

**Note**: Code in parentheses is the corresponding header found in the raw data file.

**Relating to BellSouth Performance**

- No BellSouth Analog Exists

## SQM Disaggregation - Analog/Benchmark

| SQM Level of Disaggregation | SQM Analog/Benchmark |
|---|---|
| • UNE xDSL | 95% of Lines Successfully Tested |
| - ADSL | |
| - HDSL | |
| - UCL | |
| - OTHER | |

## SEEM Measure

| SEEM | Tier I | Tier II |
|---|---|---|
| Yes | X | X |

## SEEM Disaggregation - Analog/Benchmark

| SEEM Disaggregation | SEEM Analog/Benchmark |
|---|---|
| • UNE xDSL | 95% of Lines Successfully Tested |
| - ADSL | |
| - HDSL | |
| - UCL | |
| - Other | |

# P-9: % Provisioning Troubles within 30 Days of Service Order Completion

## Definition

Percent Provisioning Troubles within 30 days of Service Order Completion measures the quality and accuracy of Service order activities.

## Exclusions

- Cancelled Service Orders
- Order Activities of BellSouth or the CLEC associated with internal or administrative use of local services (Record Orders, Listing Orders, Test Orders, etc.) Test order types may be C, N, R, or T.
- D & F orders
- Trouble reports caused and closed out to Customer Provided Equipment (CPE)

## Business Rules

Measures the quality and accuracy of completed orders. The first trouble report received after service order completion is counted in this measure. Subsequent trouble reports are measured in Repeat Report Rate. Reports are calculated searching in the prior report period for completed service orders and following 30 days after completion of the service order for a trouble report issue date.

D & F orders are excluded as there is no subsequent activity following a disconnect.

**Note**: Standalone LNP historical data is not available in the maintenance systems (LMOS or WFA).

## Calculation

**% Provisioning Troubles within 30 days of Service Order Activity** = (a / b) X 100

- a = Trouble reports on all completed orders within 30 days following service order(s) completion
- b = All Service Orders completed in the previous report calendar month

## Report Structure

- CLEC Specific
- CLEC Aggregate
- BellSouth Aggregate
- Reported in categories of <10 line/circuits; >= 10 line/circuits (except trunks)
- Dispatch /Non-Dispatch (except trunks)
- Geographic Scope
  - State
  - Region

## Data Retained

### Relating to CLEC Experience

- Report Month
- CLEC Order Number and PON
- Order Submission Date (TICKET_ID)
- Order Submission Time (TICKET_ID)
- Status Type
- Status Notice Date

- Standard Order Activity
- Geographic Scope

**Note:** Code in parentheses is the corresponding header found in the raw data file.

### Relating to BellSouth Performance

- Report Month
- BellSouth Order Number
- Order Submission Date
- Order Submission Time
- Status Type
- Status Notice Date
- Standard Order Activity
- Geographic Scope

## SQM Disaggregation - Analog/Benchmark

| SQM Level of Disaggregation | SQM Analog/Benchmark |
|---|---|
| Resale Residence | Retail Residence |
| Resale Business | Retail Business |
| Resale Design | Retail Design |
| Resale PBX | Retail PBX |
| Resale Centrex | Retail Centrex |
| Resale ISDN | Retail ISDN |
| LNP (Standalone) | Retail Residence and Business (POTS) |
| INP (Standalone) | Retail Residence and Business (POTS) |
| 2W Analog Loop Design | Retail Residence and Business Dispatch |
| 2W Analog Loop Non-Design | Retail Residence and Business - (POTS Excluding Switch-Based Orders) |
| 2W Analog Loop with LNP Design | Retail Residence and Business Dispatch |
| 2W Analog Loop with LNP Non-Design | Retail Residence and Business - (POTS Excluding Switch-Based Orders) |
| 2W Analog Loop with INP Design | Retail Residence and Business Dispatch |
| 2W Analog Loop with INP Non-Design | Retail Residence and Business (POTS - Excluding Switch-Based Orders) |
| UNE Digital Loop < DS1 | Retail Digital Loop < DS1 |
| UNE Digital Loop >= DS1 | Retail Digital Loop >= DS1 |
| UNE xDSL (HDSL, ADSL and UCL) | ADSL provided to Retail |
| UNE ISDN (Includes UDC) | Retail ISDN BRI |
| UNE Line Sharing | ADSL Provided to Retail |
| UNE Loop + Port Combinations | Retail Residence and Business |
| - Dispatch In | - Dispatch In |
| - Switch-Based | - Switch Based |
| UNE Switch Ports | Retail Residence and Business (POTS) |
| UNE Combo Other | Retail Residence, Business and Design Dispatch (Including Dispatch Out and Dispatch In) |
| Local Transport (Unbundled Interoffice Transport) | Retail DS1/DS3 Interoffice |
| UNE Other Non-Design | Retail Residence and Business |
| UNE Other Design | Retail Design |
| Local Interconnection Trunks | Parity with Retail |
| UNE Line Splitting | ADSL to Retail |
| EELs | Retail DS1/DS3 |

## SEEM Measure

| SEEM | Tier I | Tier II |
|---|---|---|
| Yes | X | X |

## SEEM Disaggregation - Analog/Benchmark

| SEEM Disaggregation | SEEM Analog/Benchmark |
|---|---|
| • Resale Residence | Retail Residence |
| • Resale Business | Retail Business |
| • Resale Design | Retail Design |
| • Resale PBX | Retail PBX |
| • Resale Centrex | Retail Centrex |
| • Resale ISDN | Retail ISDN |
| • LNP (Standalone) | Retail Residence and Business (POTS) |
| • INP (Standalone) | Retail Residence and Business (POTS) |
| • 2W Analog Loop Design | Retail Residence and Business Dispatch |
| • 2W Analog Loop Non-Design | Retail Residence and Business - (POTS Excluding Switch-Based Orders) |
| • 2W Analog Loop with LNP Design | Retail Residence and Business Dispatch |
| • 2W Analog Loop with LNP Non-Design | Retail Residence and Business - (POTS Excluding Switch-Based Orders) |
| • 2W Analog Loop with INP Design | Retail Residence and Business Dispatch |
| • 2W Analog Loop with INP Non-Design | Retail Residence and Business (POTS - Excluding Switch-Based Orders) |
| • UNE Digital Loop < DS1 | Retail Digital Loop < DS1 |
| • UNE Digital Loop >= DS1 | Retail Digital Loop >= DS1 |
| • UNE Loop + Port Combinations | Retail Residence and Business |
| - Dispatch In | - Dispatch In |
| - Switch-Based | - Switch-Based |
| • UNE Switch Ports | Retail Residence and Business (POTS) |
| • UNE Combo Other | Retail Residence, Business and Design Dispatch (Including Dispatch Out and Dispatch In) |
| • UNE xDSL (HDSL, ADSL and UCL) | ADSL provided to Retail |
| • UNE ISDN (Includes UDC) | Retail ISDN BRI |
| • UNE Line Sharing | ADSL Provided to Retail |
| • Local Transport (Unbundled Interoffice Transport) | Retail DS1/DS3 Interoffice |
| • Local Interconnection Trunks | Parity with Retail |
| • UNE Line Splitting | ADSL Provided to Retail |
| • UNE Other Non-Design | Retail Residence and Business |
| • UNE Other Design | Retail Design |
| • EELs | Retail DS1/DS3 |

## P-10: Total Service Order Cycle Time (TSOCT)
## (Deleted)

# P-11: Service Order Accuracy

## Definition

The "service order accuracy" measurement measures the accuracy and completeness of BellSouth service orders by comparing what was ordered and what was completed.

## Exclusions

- Canceled Service Orders
- Order Activities of BellSouth or the CLEC associated with internal or administrative use of local services (Record Orders, Listing Orders, Test Orders, etc.)
- D & F orders

## Business Rules

A statistically valid sample of service orders, completed during a monthly reporting period, is compared to the original account profile and the order that the CLEC sent to BellSouth. An order is "completed without error" if all service attributes and account detail changes (as determined by comparing the original order) completely and accurately reflect the activity specified on the original order and any supplemental CLEC order. For both small and large sample sizes, when a Service Request cannot be matched with a corresponding Service Order, it will not be counted. For small sample sizes an effort will be made to replace the service request.

**Service Order Accuracy Sampling Process:** A list of all orders completed in the report month is generated. The orders are then listed by the disaggregations specified in the SQM. For each disaggregation, the quantity of completed orders and the error rate for each disaggregation from the previous month are entered into a "Stratified Random Sampling for Proportions" formula. This formula determines the number of orders that are to be reviewed for each disaggregation. Once the sample size for each disaggregation is determined, the specified quantity of orders for each disaggregation are pulled for review.

## Calculation

**Percent Service Order Accuracy** = (a / b) X 100

- a = Orders Completed without Error
- b = Orders Completed in Reporting Period

## Report Structure

- CLEC Aggregate
- Reported in categories of <10 line/circuits; >= 10 line/circuits
- Dispatch/Non-Dispatch

## Data Retained

### Relating to CLEC Experience

- Report Month
- CLEC Order Number and PON
- Local Service Request (LSR)
- Order Submission Date
- Committed Due Date
- Service Type
- Standard Order Activity

**Relating to BellSouth Performance**

- No BellSouth Analog Exist

## SQM Disaggregation - Analog/Benchmark

| SQM Level of Disaggregation | SQM Analog/Benchmark |
|---|---|
| • Resale Residence | 95% Accurate |
| • Resale Business | |
| • Resale Design (Specials) | |
| • UNE Specials (Design) | |
| • UNE (Non-Design) | |
| • Local Interconnection Trunks | |

## SEEM Measure

| SEEM | Tier I | Tier II |
|---|---|---|
| Yes | | X |

## SEEM Disaggregation - Analog/Benchmark

| SEEM Disaggregation | SEEM Analog/Benchmark |
|---|---|
| • Resale | 95% |
| • UNE | 95% |
| • UNE-P | 95% |

**Note:** This measure to be replaced when P-11A is implemented.

***Note*: This measure becomes effective with September 2003 service orders. The Service Order Accuracy measure as defined in the previous SQM will be effective prior to that time.**

# P-11A: Service Order Accuracy



## Definition

The Service Order Accuracy measurement measures the accuracy and completeness of CLEC requests for service by comparing the CLEC Local Service Request (LSR) to the completed service order after provisioning has been completed. Only electronically submitted LSRs that require manual handling by a BellSouth service representative in the LCSC are measured.

## Exclusions

- Canceled Service Orders
- Order Activities of BellSouth or the CLEC associated with internal or administrative use of local services (Record Orders, Listing Orders, orders using test OCNs, which may be coded C, N, R or T etc.)
- Disconnect Orders
- CLEC LSRs submitted manually (FAX or Courier)
- CLEC LSRs submitted electronically that are not manually handled by BellSouth (Flow Through)

## Business Rules

Only CLEC LSRs submitted electronically that fall out of the electronic system for manual processing (partially mechanized) by a BellSouth representative and the resulting service orders are selected for this measure. The CLEC requested services on the LSR are compared to the completed service order using the CLEC-Affecting Service Attributes shown below.

### Selected CLEC-Affecting Service Attributes

The BellSouth Local Service Request (LSR) fields identified below will be used, as applicable, for this Service Order Accuracy review process.

### BellSouth LSR Fields

The fields listed below would only be captured as a miss when they are service affecting. For the purpose of the Service Order Accuracy measure, if any of the fields listed below are populated on the LSR and do not match the corresponding field on the Service Order, but this mismatch does not affect the correct provisioning of the Service Order, the field is not considered to be service affecting and therefore will not be included as a miss in this measure. An example would be LCSC/System workarounds, which will be identified in a document posted on the Interconnection website. CLECs may discuss any of the posted LCSC/System Workarounds during the regular PMAP notification calls.

- Company Code
- PON
- Billed Telephone Number
- Telephone Number
- Ported Telephone Number
- Circuit ID
- PIC
- LPIC
- Directory Listing
  - Directory Delivery Address
  - Listing Activity
  - Alphanumeric Listing Identifier Code
  - Record Type

  - Listing Type
  - Listed Telephone Number
  - Listed Name, Last Name
  - Listed Name, First Name
  - Address Indicator
  - Listed Address House Number
  - Listed Address House Number Suffix
  - Listed Address Street Directional
  - Listed Address Street Name
  - Listed Address Thoroughfare
  - Listed Address Street Suffix
  - Listed Address Locality
  - Yellow Pages Heading
- Features
  - Feature Activity
  - Feature Codes
  - Feature Detail*
- Hunting
  - Hunt Group Activity
  - Hunt Group Identifier
  - Telephone Number Identifier
  - Hunt Type Code
  - Hunt Line Activity
  - Hunting Sequence
  - Number Type
  - Hunting Telephone Number
- E911 Listing
  - Service Address House Number
  - Service Address House Number Suffix
  - Service Address Street Directional
  - Service Address Street Name
  - Service Address Thoroughfare
  - Service Address Street Suffix
  - Service Address Descriptive Location
- EATN
- ATN
- APOT
- CFA
- NC
- NCI

* Feature Detail will only be checked for the following USOCs: GCE, GCJ, CREX4, GCJRC, GCZ, DRS, VMSAX, S98VM, S98AF, SMBBX, MBBRX. USOCs and FIDs for Feature Detail will be posted on the Interconnection Website. Any changes to the USOCs and FIDs required to continue checking the identical service will be updated on this Website.

## Calculation

**Percent Service Order Accuracy = (a / b) X 100**

- a = Applicable Orders Completed without Error
- b = Applicable Orders Completed in Reporting Period

## Report Structure

- CLEC Specific
- CLEC Aggregate
- Geographic Scope
  - Region

## Data Retained

### Relating to CLEC Experience

- Report Month
- CLEC Order Number (PON)
- Local Service Request (LSR) Number
- BellSouth Service Order Number
- BellSouth Service Order Completion Date
- Service Type (Resale, UNE, UNE-P)
- Standard Order Activity

### Relating to BellSouth Performance

- No BellSouth Analog Exists

## SQM Disaggregation – Analog/Benchmark

| SQM Level of Disaggregation | SQM Analog/Benchmark |
|---|---|
| Resale | 95% Accurate |
| UNE | 95% Accurate |
| UNE-P | 95% Accurate |

## SEEM Measure

| SEEM | Tier I | Tier II | Tier III |
|---|---|---|---|
| Yes | X | X | |

## SEEM Disaggregation - Analog/Benchmark

| SEEM Disaggregation | SEEM Analog/Benchmark |
|---|---|
| Resale | 95% Accurate |
| UNE | 95% Accurate |
| UNE-P | 95% Accurate |

## P-12: LNP-Average Disconnect Timeliness Interval & Disconnect Timeliness Interval Distribution

**(Deleted)**

# P-13B: LNP - Percent Out of Service < 60 Minutes

## Definition

The Number of LNP related conversions where the time required to facilitate the activation of the port in BellSouth's network is less than 60 minutes, expressed as a percentage of total number of activations that took place.

## Exclusions

- CLEC-caused errors
- NPAC caused errors unless caused by BellSouth
- Standalone LNP orders with more than 500 number activations

## Business Rules

The Start time is the Receipt of the NPAC broadcast activation message in BellSouth's LSMS. The End time is when the Provisioning event is successfully completed in BellSouth's network as reflected in BellSouth's LSMS. Count the number of activations that took place in less than 60 minutes.

## Calculation

**Percent Out of Service < 60 Minutes** = (a / b) X 100

- a = Number of activations provisioned in less than 60 minutes
- b = Total LNP activations

## Report Structure

- CLEC Specific
- CLEC Aggregate
- Geographic Scope
  - State
  - Region

## Data Retained

### Relating to CLEC Experience

- Order Number
- Telephone Number/Circuit Number
- Committed Due Date
- Date/Time of Recent Change Notice

### Relating to BellSouth Performance

- SOCS Completion Date and Time Stamp
- CLEC Activate Message

## SQM Disaggregation – Analog/Benchmark

| SQM Level of Disaggregation | SQM Analog/Benchmark |
|---|---|
| • LNP | > = 96.5% |

## SEEM Measure

| SEEM | Tier I | Tier II | Tier III |
|---|---|---|---|
| Yes | X | X | |

## SEEM Disaggregation - Analog/Benchmark

| SEEM Disaggregation | SEEM Analog/Benchmark |
|---|---|
| • LNP | > = 96.5% |

# P-13C: LNP – Percentage of Time BellSouth Applies the 10-Digit Trigger Prior to the LNP Order Due Date



## Definition

Percentage of time BellSouth applies 10-digit trigger for LNP TNs prior to the due date.

## Exclusions

Excludes CLEC or Customer caused misses or delays.

## Business Rules

Obtain number of LNP TNs where the 10-digit trigger was applicable prior to due date, and the total number of LNP TNs where the 10-digit trigger was applicable.

## Calculation

**Percentage of 10-Digit Applications** = (a / b) X 100

- a = Count of LNP TNs for which 10-digit trigger was applied prior to due date
- b = Total LNP TNs for which 10-digit triggers were applicable

## Report Structure

- CLEC Specific
- CLEC Aggregate
- Geographic Scope
  - State
  - Region

## Data Retained

### Relating to CLEC Experience

- Order Number
- Telephone Number/Circuit Number
- Committed Due Date
- Date/Time of Recent Change Notice

### Relating to BellSouth Performance

- SOCS Completion Date and Time Stamp
- CLEC Activate Message

## SQM Disaggregation - Analog/Benchmark

| SQM Level of Disaggregation | SQM Analog/Benchmark |
|---|---|
| • LNP (Standalone) | Benchmark: 95% |

## SEEM Measure

| SEEM | Tier I | Tier II |
|---|---|---|
| Yes | X | X |

| SEEM Disaggregation | SEEM Analog/Benchmark |
|---|---|
| • LNP (Standalone) | Benchmark: 95% |

# P-13D: LNP - Average Disconnect Timeliness Interval (Non-Trigger)



## Definition

Disconnect Timeliness is defined as the interval between the time ESI Number Manager receives the valid 'Number Ported' message from NPAC (signifying the CLEC 'Activate') until the time the Disconnect is completed in the Central Office switch. This interval effectively measures BellSouth responsiveness by isolating it from impacts that are caused by CLEC related activities.

## Exclusions

- Canceled Service Orders
- Order Activities of BellSouth or the CLEC associated with internal or administrative use of local services (Record Orders, Listing Orders, Test Orders, etc.) where identifiable. Order types may be C, N, R, or T.
- CLEC-caused errors
- NPAC-caused errors, unless caused by BellSouth
- Incomplete Ports where only a subset of activate messages have been received compared with the LSR and create messages.
- Orders which are candidates for 10 digit triggers, except those that did not receive 10 digit triggers prior to the port out date.
- LSRs where the CLEC did not contact BST within 30 minutes after Activate Message.

## Business Rules

The Disconnect Timeliness interval is determined for each telephone number ported associated with a disconnect service order processed on an LSR during the reporting period. The Disconnect Timeliness interval is the elapsed time from when BellSouth receives a valid 'Number Ported' message in ESI Number Manager (signifying the CLEC 'Activate') for each telephone number ported until each number on the service order is disconnected in the Central Office switch. Elapsed time for each ported number is accumulated for each reporting dimension. The accumulated time for each reporting dimension is then divided by the total number of selected telephone numbers disconnected in the reporting period. Non-Business hours will be excluded from the duration calculation for unscheduled after hours LNP ports. This will yield a benchmark equivalent to by 12:00 noon the next business day thus, keeping the benchmark at 4 hours.

## Calculation

**Disconnect Timeliness Interval** = (a - b)

- a = Completion Date and Time in Central Office switch for each number on disconnect order
- b = Valid 'Number Ported' message received date and time

**Average Disconnect Timeliness Interval** = (c / d)

- c = Sum of all Disconnect Timeliness Intervals
- d = Total Number of disconnected numbers completed in reporting period

## Report Structure

- CLEC Specific
- CLEC Aggregate
- Geographic Scope
  - State
  - Region

## Data Retained

### Relating to CLEC Experience

- Order Number
- Telephone Number/Circuit Number
- Committed Due Date
- Receipt Date/Time (ESI Number Manager)
- Date/Time of Recent Change Notice

### Relating to BellSouth Performance

- SOCS Completion Date and Time Stamp
- CLEC Activate Message

## SQM Disaggregation – Analog/Benchmark

| SQM Level of Disaggregation | SQM Analog/Benchmark |
|---|---|
| • LNP (Normal Working Hours and Approved After Hours) | 95% < = 4 Hours |
| • LNP (Unscheduled After Hours Ports) | 95% <= 4 Hours (excluding non-business hours) |

## SEEM Measure

| SEEM | Tier I | Tier II |
|---|---|---|
| Yes | X | X |

## SEEM Disaggregation - Analog/Benchmark

- LNP (Normal Working Hours and Approved After Hours)..... 95% < = 4 Hours
- LNP (Unscheduled After Hours Ports)..... 95% <= 4 Hours (excluding non-business hours)

# Section 4: Maintenance & Repair

## M&R-1: Missed Repair Appointments

### Definition

The percent of customer trouble reports not cleared by the committed date and time.

### Exclusions

- Trouble tickets canceled at the CLEC request
- BellSouth trouble reports associated with internal or administrative service
- Customer Provided Equipment (CPE) troubles or CLEC Equipment Trouble

### Business Rules

The negotiated commitment date and time is established when the repair report is received. The cleared time is the date and time that BellSouth personnel clear the trouble and closes the trouble report in his/her Computer Access Terminal (CAT) or workstation. If this is after the Commitment time, the report is flagged as a "Missed Commitment" or a missed repair appointment. When the data for this measure is collected for BellSouth and a CLEC, it can be used to compare the percentage of the time repair appointments are missed due to BellSouth reasons. (No access reports are not part of this measure because they are not a missed appointment.)

> **Note**: Appointment intervals vary with force availability in the POTS environment. Specials and Trunk intervals are standard interval appointments of no greater than 24 hours. Standalone LNP historical data is not available in the maintenance systems (LMOS or WFA).

### Calculation

**Percentage of Missed Repair Appointments** = (a / b) X 100

- a = Count of Customer Troubles Not Cleared by the Quoted Commitment Date and Time
- b = Total Customer Trouble reports closed in Reporting Period

### Report Structure

- Dispatch/Non-Dispatch
- CLEC Specific
- CLEC Aggregate
- BellSouth Aggregate
- Geographic Scope
  - State
  - Region

## Data Retained

### Relating to CLEC Experience

- Report Month
- CLEC Company Name
- Submission Date and Time (TICKET_ID)
- Completion Date (CMPLTN_DT)
- Service Type (CLASS_SVC_DESC)
- Disposition and Cause (CAUSE_CD & CAUSE_DESC)

**Note**: Code in parentheses is the corresponding header found in the raw data file.

### Relating to BellSouth Performance

- Report Month
- BellSouth Company Code
- Submission Date and Time
- Completion Date
- Service Type
- Disposition and Cause (Non-Design /Non-Special Only)
- Trouble Code (Design and Trunking Services)

## SQM Disaggregation - Analog/Benchmark

| SQM Level of Disaggregation | SQM Analog/Benchmark |
|---|---|
| Resale Residence | Retail Residence |
| Resale Business | Retail Business |
| Resale Design | Retail Design |
| Resale PBX | Retail PBX |
| Resale Centrex | Retail Centrex |
| Resale ISDN | Retail ISDN |
| 2W Analog Loop Design | Retail Residence & Business Dispatch |
| 2W Analog Loop Non – Design | Retail Residence & Business (POTS) (Exclusion of Switch-based feature troubles) |
| UNE Digital Loop < DS1 | Retail Digital Loop < DS1 |
| UNE Digital Loop >= DS1 | Retail Digital Loop >= DS1 |
| UNE Loop + Port Combinations | Retail Residence and Business |
| UNE Switch ports | Retail Residence and Business (POTS) |
| UNE Combo Other | Retail Residence, Business and Design Dispatch |
| UNE xDSL (HDSL, ADSL and UCL) | ADSL Provided to Retail |
| UNE ISDN | Retail ISDN – BRI |
| UNE Line Sharing | ADSL provided to Retail |
| UNE Other Design | Retail Design |
| UNE Other Non-Design | Retail Residence and Business |
| Local Interconnection Trunks | Parity with Retail |
| Local Transport (Unbundled Interoffice Transport) | Retail DS1/DS3 Interoffice |

## SEEM Measure

| SEEM | Tier I | Tier II |
|---|---|---|
| Yes | X | X |

## SEEM Disaggregation - Analog/Benchmark

| SEEM Disaggregation | SEEM Analog/Benchmark |
|---|---|
| • Resale Residence | Retail Residence |
| • Resale Business | Retail Business |
| • Resale Design | Retail Design |
| • Resale PBX | Retail PBX |
| • Resale Centrex | Retail Centrex |
| • Resale ISDN | Retail ISDN |
| • 2W Analog Loop Design | Retail Residence and Business Dispatch |
| • 2W Analog Loop Non – Design | Retail Residence and Business (POTS) (Exclusion of Switch-based feature troubles) |
| • UNE Digital Loop < DS1 | Retail Digital Loop < DS1 |
| • UNE Digital Loop >= DS1 | Retail Digital Loop >= DS1 |
| • UNE Loop + Port Combinations | Retail Residence & Business |
| • UNE Switch ports | Retail Residence & Business (POTS) |
| • UNE Combo Other | Retail Residence, Business and Design Dispatch |
| • UNE xDSL (HDSL, ADSL and UCL) | ADSL provided to Retail |
| • UNE ISDN | Retail ISDN – BRI |
| • UNE Line Sharing | ADSL Provided to Retail |
| • UNE Other Design | Retail Design |
| • UNE Other Non-Design | Retail Residence and Business |
| • Local Transport (Unbundled Interoffice Transport) | Retail DS1/DS3 Interoffice |
| • Local Interconnection Trunks | Parity with Retail |

# M&R-2: Customer Trouble Report Rate

## Definition

Initial and repeated customer direct or referred customer troubles reported within a calendar month per 100 lines/circuits in service.

## Exclusions

- Trouble tickets canceled at the CLEC request.
- BellSouth trouble reports associated with internal or administrative service.
- Customer Provided Equipment (CPE) troubles or CLEC Equipment Trouble.

## Business Rules

Customer Trouble Report Rate is computed by accumulating the number of maintenance initial and repeated trouble reports during the reporting period. The resulting number of trouble reports are divided by the total "number of service" lines, ports or combination that exist for the CLECs and BellSouth respectively at the end of the report month.

## Calculation

**Customer Trouble Report Rate** = (a / b) X 100

- a = Count of Initial and Repeated Customer Trouble Reports closed in the Current Period
- b = Number of Service Access Lines in service at End of the Report Period

## Report Structure

- CLEC Specific
- CLEC Aggregate
- BellSouth Aggregate
- Dispatch/Non-Dispatch
- Geographic Scope
  - State
  - Region

## Data Retained

### Relating to CLEC Experience

- Report Month
- CLEC Company Name
- Ticket Submission Date and Time (TICKET_ID)
- Ticket Completion Date (CMPLTN_DT)
- Service Type (CLASS_SVC_DESC)
- Disposition and Cause (CAUSE_CD & CAUSE_DESC)
- # Service Access Lines in Service at the end of period

**Note**: Code in parentheses is the corresponding header found in the raw data file.

**Relating to BellSouth Performance**

- Report Month
- BellSouth Company Code
- Ticket Submission Date and Time
- Ticket Completion Date
- Service Type
- Disposition and Cause (Non-Design /Non-Special Only)
- Trouble Code (Design and Trunking Services)
- # Service Access Lines in Service at the end of period

## SQM Disaggregation - Analog/Benchmark

| SQM Level of Disaggregation | SQM Analog/Benchmark |
|---|---|
| Resale Residence | Retail Residence |
| Resale Business | Retail Business |
| Resale Design | Retail Design |
| Resale PBX | Retail PBX |
| Resale Centrex | Retail Centrex |
| Resale ISDN | Retail ISDN |
| 2W Analog Loop Design | Retail Residence and Business Dispatch |
| 2W Analog Loop Non – Design | Retail Residence and Business (POTS) (Exclusion of Switch-based feature troubles) |
| UNE Digital Loop < DS1 | Retail Digital Loop < DS1 |
| UNE Digital Loop >= DS1 | Retail Digital Loop >= DS1 |
| UNE Loop + Port Combinations | Retail Residence and Business |
| UNE Switch Ports | Retail Residence and Business (POTS) |
| UNE Combo Other | Retail Residence, Business and Design Dispatch |
| UNE xDSL (HDSL, ADSL and UCL) | ADSL Provided to Retail |
| UNE ISDN | Retail ISDN – BRI |
| UNE Line Sharing | ADSL Provided to Retail |
| UNE Other Design | Retail Design |
| UNE Other Non-Design | Retail Residence and Business |
| Local Interconnection Trunks | Parity with Retail |
| Local Transport (Unbundled Interoffice Transport) | Retail DS1/DS3 Interoffice |

## SEEM Measure

| SEEM | Tier I | Tier II |
|---|---|---|
| Yes | X | X |

## SEEM Disaggregation - Analog/Benchmark

| SEEM Disaggregation | SEEM Analog/Benchmark |
|---|---|
| Resale Residence | Retail Residence |
| Resale Business | Retail Business |
| Resale Design | Retail Design |
| Resale PBX | Retail PBX |
| Resale Centrex | Retail Centrex |
| Resale ISDN | Retail ISDN |
| 2W Analog Loop Design | Retail Residence and Business Dispatch |
| 2W Analog Loop Non – Design | Retail Residence and Business (POTS) (Exclusion of Switch-based feature troubles) |
| UNE Digital Loop < DS1 | Retail Digital Loop < DS1 |
| UNE Digital Loop > DS1 | Retail Digital Loop >= DS1 |
| UNE Loop + Port Combinations | Retail Residence and Business |
| UNE Switch Ports | Retail Residence and Business (POTS) |
| UNE Combo Other | Retail Residence, Business and Design Dispatch |

- UNE xDSL (HDSL, ADSL and UCL) ..... ADSL Provided to Retail
- UNE ISDN ..... Retail ISDN – BRI
- UNE Line Sharing ..... ADSL Provided to Retail
- UNE Other Design..... Retail Design
- UNE Other Non-Design ..... Retail Residence and Business
- Local Transport (Unbundled Interoffice Transport) ..... Retail DS1/DS3 Interoffice
- Local Interconnection Trunks..... Parity with Retail

# M&R-3: Maintenance Average Duration

## Definition

The Average duration of Customer Trouble Reports from the receipt of the Customer Trouble Report to the time the trouble report is cleared.

## Exclusions

- Trouble tickets canceled at the CLEC request.
- BellSouth trouble reports associated with internal or administrative service.
- Customer Provided Equipment (CPE) troubles or CLEC Equipment Trouble.

## Business Rules

For Average Duration the clock starts on the date and time of the receipt of the correct report information, i.e. correct telephone number, correct circuit identification, trouble description, etc. for the repair request. The clock stops on the date and time the service is restored and the BellSouth or CLEC customer is notified (when the technician completes the trouble ticket on his/her CAT or work systems).

## Calculation

**Maintenance Duration** = (a - b)

- a = Date and Time of Service Restoration
- b = Date and Time Customer Trouble Ticket was Opened

**Average Maintenance Duration** = (c / d)

- c = Total of all maintenance durations in the reporting period
- d = Total Closed Customer Troubles in the reporting period

## Report Structure

- Dispatch/Non-Dispatch
- CLEC Specific
- CLEC Aggregate
- BellSouth Aggregate
- Geographic Scope
  - State
  - Region

## Data Retained

### Relating to CLEC Experience

- Report Month
- Total Tickets (LINE_NBR)
- CLEC Company Name
- Ticket Submission Date and Time (TICKET_ID)
- Ticket Completion Date (CMPLTN_DT)
- Service Type (CLASS_SVC_DESC)
- Disposition and Cause (CAUSE_CD & CAUSE_DESC)

**Note**: Code in parentheses is the corresponding header found in the raw data file.

**Relating to BellSouth Performance**

- Report Month
- Total Tickets
- BellSouth Company Code
- Ticket Submission Date
- Ticket Submission Time
- Ticket Completion Date
- Ticket Completion Time
- Total Duration Time
- Service Type
- Disposition and Cause (Non-Design/Non-Special Only)
- Trouble Code (Design and Trunking Services)

## SQM Disaggregation - Analog/Benchmark

| SQM Level of Disaggregation | SQM Analog/Benchmark |
|---|---|
| Resale Residence | Retail Residence |
| Resale Business | Retail Business |
| Resale Design | Retail Design |
| Resale PBX | Retail PBX |
| Resale Centrex | Retail Centrex |
| Resale ISDN | Retail ISDN |
| 2W Analog Loop Design | Retail Residence and Business Dispatch |
| 2W Analog Loop Non – Design | Retail Residence and Business (POTS) (Exclusion of Switch-based feature troubles) |
| UNE Digital Loop < DS1 | Retail Digital Loop < DS1 |
| UNE Digital Loop >= DS1 | Retail Digital Loop >= DS1 |
| UNE Loop + Port Combinations | Retail Residence and Business |
| UNE Switch ports | Retail Residence and Business (POTS) |
| UNE Combo Other | Retail Residence, Business & Design Dispatch |
| UNE xDSL (HDSL, ADSL and UCL) | ADSL Provided to Retail |
| UNE ISDN | Retail ISDN – BRI |
| UNE Line Sharing | ADSL Provided to Retail |
| UNE Other Design | Retail Design |
| UNE Other Non-Design | Retail Residence and Business |
| Local Transport (Unbundled Interoffice Transport) | Retail DS1/DS3 Interoffice |
| Local Interconnection Trunks | Parity with Retail |

## SEEM Measure

| SEEM | Tier I | Tier II |
|---|---|---|
| Yes | X | X |

## SEEM Disaggregation - Analog/Benchmark

| SEEM Disaggregation | SEEM Analog/Benchmark |
|---|---|
| Resale Residence | Retail Residence |
| Resale Business | Retail Business |
| Resale Design | Retail Design |
| Resale PBX | Retail PBX |
| Resale Centrex | Retail Centrex |
| Resale ISDN | Retail ISDN |
| 2W Analog Loop Design | Retail Residence and Business Dispatch |
| 2W Analog Loop Non – Design | Retail Residence and Business (POTS) (Exclusion of Switch-based feature troubles) |
| UNE Digital Loop < DS1 | Retail Digital Loop < DS1 |

- UNE Digital Loop >= DS1 ..... Retail Digital Loop >= DS1
- UNE Loop + Port Combinations ..... Retail Residence and Business
- UNE Switch ports ..... Retail Residence and Business (POTS)
- UNE Combo Other ..... Retail Residence, Business and Design Dispatch
- UNE xDSL (HDSL, ADSL and UCL) ..... ADSL Provided to Retail
- UNE ISDN ..... Retail ISDN – BRI
- UNE Line Sharing ..... ADSL Provided to Retail
- UNE Other Design ..... Retail Design
- UNE Other Non-Design ..... Retail Residence and Business
- Local Transport (Unbundled Interoffice Transport) ..... Retail DS1/DS3 Interoffice
- Local Interconnection Trunks ..... Parity with Retail

# M&R-4: Percent Repeat Troubles within 30 Days

## Definition

Percent Customer Repeat Troubles within 30 Days measures the percent of customer troubles, during the current reporting period, that had at least one prior trouble ticket on the same line/circuit, anytime in the proceeding 30 calendar days from the receipt of the current trouble report.

## Exclusions

- Trouble tickets canceled at the CLEC request.
- BellSouth trouble reports associated with internal or administrative service.
- Customer Provided Equipment (CPE) troubles or CLEC Equipment Trouble.

## Business Rules

This measure includes Customer trouble reports on the same line/circuit, received within 30 days of an original Customer trouble report, using the 'cleared date' of the first trouble and the 'received date' of the next trouble.

## Calculation

**Percent Repeat Customer Troubles within 30 Days** = (a / b) X 100

- a = Count of Customer Troubles using the 'received date' where more than one trouble report was logged for the same service line/circuit, within a continuous 30 days
- b = Count of Total Customer Trouble Reports using the 'cleared date', in the Reporting Period

## Report Structure

- Dispatch/Non-Dispatch
- CLEC Specific
- CLEC Aggregate
- BellSouth Aggregate
- Geographic Scope
  - State
  - Region

## Data Retained

### Relating to CLEC Experience

- Report Month
- Total Tickets (LINE_NBR)
- CLEC Company Name
- Ticket Submission Date and Time (TICKET_ID)
- Ticket Completion Date (CMPLTN_DT)
- Total and Percent Repeat Customer Trouble Reports within 30 Days (TOT_REPEAT)
- Service Type
- Disposition and Cause (CAUSE_CD & CAUSE_DESC)

**Note**: Code in parentheses is the corresponding header found in the raw data file.

### Relating to BellSouth Performance

- Report Month

- Total Tickets
- BellSouth Company Code
- Ticket Submission Date
- Ticket Submission Time
- Ticket Completion Date
- Ticket Completion Time
- Total and Percent Repeat Customer Trouble Reports within 30 Days
- Service Type
- Disposition and Cause (Non-Design /Non-Special Only)
- Trouble Code (Design and Trunking Services)

## SQM Disaggregation - Analog/Benchmark

| SQM Level of Disaggregation | SQM Analog/Benchmark |
|---|---|
| Resale Residence | Retail Residence |
| Resale Business | Retail Business |
| Resale Design | Retail Design |
| Resale PBX | Retail PBX |
| Resale Centrex | Retail Centrex |
| Resale ISDN | Retail ISDN |
| 2W Analog Loop Design | Retail Residence and Business Dispatch |
| 2W Analog Loop Non – Design | Retail Residence and Business (POTS) (Exclusion of Switch-based feature troubles) |
| UNE Digital Loop < DS1 | Retail Digital Loop < DS1 |
| UNE Digital Loop >= DS1 | Retail Digital Loop >= DS1 |
| UNE Loop + Port Combinations | Retail Residence and Business |
| UNE Switch ports | Retail Residence and Business (POTS) |
| UNE Combo Other | Retail Residence, Business and Design Dispatch |
| UNE xDSL (HDSL, ADSL and UCL) | ADSL Provided to Retail |
| UNE ISDN | Retail ISDN – BRI |
| UNE Line Sharing | ADSL Provided to Retail |
| UNE Other Design | Retail Design |
| UNE Other Non-Design | Retail Residence and Business |
| Local Transport (Unbundled Interoffice Transport) | Retail DS1/DS3 Interoffice |
| Local Interconnection Trunks | Parity with Retail |

## SEEM Measure

| SEEM | Tier I | Tier II |
|---|---|---|
| Yes | X | X |

## SEEM Disaggregation - Analog/Benchmark

| SEEM Disaggregation | SEEM Analog/Benchmark |
|---|---|
| Resale Residence | Retail Residence |
| Resale Business | Retail Business |
| Resale Design | Retail Design |
| Resale PBX | Retail PBX |
| Resale Centrex | Retail Centrex |
| Resale ISDN | Retail ISDN |
| 2W Analog Loop Design | Retail Residence and Business Dispatch |
| 2W Analog Loop Non – Design | Retail Residence and Business (POTS) (Exclusion of Switch-based feature troubles) |
| UNE Digital Loop < DS1 | Retail Digital Loop < DS1 |
| UNE Digital Loop >= DS1 | Retail Digital Loop >= DS1 |
| UNE Loop + Port Combinations | Retail Residence and Business |
| UNE Switch ports | Retail Residence and Business (POTS) |
| UNE Combo Other | Retail Residence, Business and Design Dispatch |

- UNE xDSL (HDSL, ADSL and UCL) ..... ADSL Provided to Retail
- UNE ISDN ..... Retail ISDN – BRI
- UNE Line Sharing ..... ADSL Provided to Retail
- UNE Other Design..... Retail Design
- UNE Other Non-Design ..... Retail Residence and Business
- Local Transport (Unbundled Interoffice Transport) ..... Retail DS1/DS3 Interoffice
- Local Interconnection Trunks..... Parity with Retail

# M&R-5: Out of Service (OOS) > 24 Hours

## Definition

For Out of Service Customer Troubles (no dial tone, cannot be called or cannot call out) the percentage of Total OOS Customer Troubles cleared in excess of 24 hours. (All design services are considered to be out of service).

## Exclusions

- Trouble Reports canceled at the CLEC request
- BellSouth Trouble Reports associated with administrative service
- Customer Provided Equipment (CPE) Troubles or CLEC Equipment Troubles.

## Business Rules

Customer Trouble reports that are out of service and cleared in excess of 24 hours. The clock begins when the customer trouble report is created in LMOS/WFA and the customer trouble is counted if the elapsed time exceeds 24 hours.

## Calculation

**Out of Service (OOS) > 24 hours** = (a / b) X 100

- a = Total Cleared Customer Troubles OOS > 24 Hours
- b = Total OOS Customer Troubles in Reporting Period

## Report Structure

- Dispatch/Non-Dispatch
- CLEC Specific
- BellSouth Aggregate
- CLEC Aggregate
- Geographic Scope
  - State
  - Region

## Data Retained

### Relating to CLEC Experience

- Report Month
- Total Tickets
- CLEC Company Name
- Ticket Submission Date and Time (TICKET_ID)
- Ticket Completion Date (CMPLTN_DT
- Percentage of Customer Troubles out of Service > 24 Hours (OOS>24_FLAG)
- Service type (CLASS_SVC_DESC)
- Disposition and Cause (CAUSE_CD & CAUSE-DESC)

**Note:** Code in parentheses is the corresponding header found in the raw data file.

**Relating to BellSouth Performance**

- Report Month
- Total Tickets
- BellSouth Company Code
- Ticket Submission Date
- Ticket Submission time
- Ticket Completion Date
- Ticket Completion Time
- Percent of Customer Troubles out of Service > 24 Hours
- Service Type
- Disposition and Cause (Non-Design/Non-Special only)
- Trouble Code (Design and Trunking Services)

## SQM Disaggregation - Analog/Benchmark

| SQM Level of Disaggregation | SQM Analog/Benchmark |
|---|---|
| Resale Residence | Retail Residence |
| Resale Business | Retail Business |
| Resale Design | Retail Design |
| Resale PBX | Retail PBX |
| Resale Centrex | Retail Centrex |
| Resale ISDN | Retail ISDN |
| 2W Analog Loop Design | Retail Residence and Business Dispatch |
| 2W Analog Loop Non – Design | Retail Residence and Business (POTS) (Exclusion of Switch-based feature troubles) |
| UNE Digital Loop < DS1 | Retail Digital Loop < DS1 |
| UNE Digital Loop >= DS1 | Retail Digital Loop >= DS1 |
| UNE Loop + Port Combinations | Retail Residence and Business |
| UNE Switch ports | Retail Residence and Business (POTS) |
| UNE Combo Other | Retail Residence, Business and Design Dispatch |
| UNE xDSL (HDSL, ADSL and UCL) | ADSL provided to Retail |
| UNE ISDN | Retail ISDN – BRI |
| UNE Line Sharing | ADSL Provided to Retail |
| UNE Other Design | Retail Design |
| UNE Other Non-Design | Retail Residence and Business |
| Local Transport (Unbundled Interoffice Transport) | Retail DS1/DS3 Interoffice |
| Local Interconnection Trunks | Parity with Retail |

## SEEM Measure

| SEEM | Tier I | Tier II |
|---|---|---|
| Yes | X | X |

## SEEM Disaggregation - Analog/Benchmark

| SEEM Disaggregation | SEEM Analog/Benchmark |
|---|---|
| Resale Residence | Retail Residence |
| Resale Business | Retail Business |
| Resale Design | Retail Design |
| Resale PBX | Retail PBX |
| Resale Centrex | Retail Centrex |
| Resale ISDN | Retail ISDN |
| 2W Analog Loop Design | Retail Residence and Business Dispatch |
| 2W Analog Loop Non – Design | Retail Residence and Business (POTS) (Exclusion of Switch-based feature troubles) |
| UNE Digital Loop < DS1 | Retail Digital Loop < DS1 |

- UNE Digital Loop >= DS1 ..... Retail Digital Loop >= DS1
- UNE Loop + Port Combinations ..... Retail Residence and Business
- UNE Switch Ports ..... Retail Residence and Business (POTS)
- UNE Combo Other ..... Retail Residence, Business and Design Dispatch
- UNE xDSL (HDSL, ADSL and UCL) ..... ADSL Provided to Retail
- UNE ISDN ..... Retail ISDN – BRI
- UNE Line Sharing ..... ADSL Provided to Retail
- UNE Other Design ..... Retail Design
- UNE Other Non-Design ..... Retail Residence and Business
- Local Transport (Unbundled Interoffice Transport) ..... Retail DS1/DS3 Interoffice
- Local Interconnection Trunks ..... Parity with Retail

# M&R-6: Average Answer Time – Repair Centers

## Definition

This report measures the average time a customer is in queue when calling a BellSouth Repair Center.

## Exclusions

- Abandoned Calls

## Business Rules

The clock starts when a CLEC Representative or BellSouth customer makes a choice on the Repair Center's menu and is put in queue for the next repair attendant. The clock stops when the repair attendant answers the call.

**Note**: The Total Column is a combined BellSouth Residence and Business number.

## Calculation

**Answer Time for BellSouth Repair Centers** = (a - b)

- a = Time BellSouth Repair Attendant Answers Call
- b = Time of entry into queue after ACD Selection

**Average Answer Time for BellSouth Repair Centers** = (c / d)

- c = Sum of all Answer Times
- d = Total number of calls by reporting period

## Report Structure

- CLEC Aggregate
- BellSouth Aggregate
- Geographic Scope
  - Region

## Data Retained

### Relating to CLEC Experience

- CLEC Average Answer Time

### Relating to BellSouth Performance

- BellSouth Average Answer Time

## SQM Disaggregation - Analog/Benchmark

### SQM Level of Disaggregation

- Region. CLEC/BellSouth Service Centers and BellSouth Repair Centers are regional.

**SQM Analog/Benchmark**

- For CLEC, Average Answer Times in UNE Center and BRMC are comparable to the Average Answer Times in the BellSouth Repair Centers.

## SEEM Measure

| SEEM | Tier I | Tier II |
|---|---|---|
| No | | |

## SEEM Disaggregation - Analog/Benchmark

| SEEM Disaggregation | SEEM Analog/Benchmark |
|---|---|
| • Not Applicable | Not Applicable |

# M&R-7: Mean Time To Notify CLEC of Network Outages

## Definition

BellSouth will inform the CLEC and appropriate BellSouth personnel of any Network outages (customer impacting).

## Exclusions

None

## Business Rules

The time it takes for the Network Management Center (NMC) to notify the CLEC and appropriate BellSouth personnel of a customer impacting network incident in equipment that may be utilized by the CLEC. When BellSouth becomes aware of a network incident, the CLEC and appropriate BellSouth personnel will be notified electronically. The notification time for each outage will be measured in minutes and divided by the number of outages for the reporting period. The CLECs will be notified the same way and at the same time as BellSouth personnel. These are broadcast messages. It is up to those receiving the message to determine if they have customers affected by the incident.

## Calculation

**Time to Notify** = (a - b)

- a = Date and Time NMC Notified
- b = Date and Time NMC detected network incident

**Mean Time to Notify** = (c / d)

- c = Sum of all Times to Notify
- d = Count of all Network Incidents

## Report Structure

- BellSouth Aggregate
- CLEC Aggregate
- CLEC Specific
- Geographic Scope
  - Region

## Data Retained

### Relating to CLEC Experience

- Report Month
- Major Network Events
- Date/Time of Incident
- Date/Time of Notification

### Relating to BellSouth Performance

- Report Month
- Major Network Events
- Date/Time of Incident
- Date/Time of Notification

## SQM Disaggregation - Analog/Benchmark

| SQM Level of Disaggregation | SQM Analog/Benchmark |
|---|---|
| • BellSouth Aggregate | Parity with Retail |
| • CLEC Aggregate | Parity with Retail |
| • CLEC Specific | Parity with Retail |

## SEEM Measure

| SEEM | Tier I | Tier II |
|---|---|---|
| No | | |

## SEEM Disaggregation - Analog/Benchmark

| SEEM Disaggregation | SEEM Analog/Benchmark |
|---|---|
| • Not Applicable | Not Applicable |

# Section 5: Billing

## B-1: Invoice Accuracy

### Definition

This measure provides the percentage of accuracy of the billing invoices rendered to CLECs during the current month.

### Exclusions

- Adjustments not related to billing errors (e.g., credits for service outage, special promotion credits, adjustments to satisfy the customer)
- Test Accounts

### Business Rules

The accuracy of billing invoices delivered by BellSouth to the CLEC must enable them to provide a degree of billing accuracy comparative to BellSouth bills rendered to retail customers of BellSouth. CLECs request adjustments on bills determined to be incorrect. The BellSouth Billing verification process includes manually analyzing a sample of local bills from each bill period. The bill verification process draws from a mix of different customer billing options and types of service. An end-to-end auditing process is performed for new products and services. Internal measurements and controls are maintained on all billing processes. The CLEC-specific raw data file (which is available on the PMAP web site) will contain the number of bills and adjustments for the reporting month. The number of bills and bill adjustments will be displayed by OCN and/or ACNA.

### Calculation

**Invoice Accuracy** = [(a - b) / a] X 100

- a = Absolute Value of Total Billed Revenues during current month
- b = Absolute Value of Total Billing Related Adjustments during current month

**Measure of Adjustments** = [(c-d) / c] X 100

- c = Number of Bills in current month
- d = Number of Billing-related Adjustments in current month

### Report Structure

- CLEC Specific
- CLEC Aggregate
- BellSouth Aggregate
- Geographic Scope
  - State
  - Region
- Number of Adjustments

### Data Retained

#### Relating to CLEC Experience

- Report Month
- Invoice Type
  - UNE
  - Resale
  - Interconnection

- Total Billed Revenue
- Total Billing Related Adjustments
- Number of Bills
- Number of Adjustments

**Relating to BellSouth Performance**

- Report Month
- Retail Type
  - CRIS
  - CABS
- Total Billed Revenue
- Total Billing Related Adjustments

## SQM Disaggregation - Analog/Benchmark

| SQM Level of Disaggregation | SQM Analog/Benchmark |
|---|---|
| • Product/Invoice Type<br>- Resale<br>- UNE<br>- Interconnection | Parity with BellSouth Retail Aggregate |

## SEEM Measure

| SEEM | Tier I | Tier II |
|---|---|---|
| Yes | X | X |

## SEEM Disaggregation - Analog/Benchmark

| SEEM Disaggregation | SEEM Analog/Benchmark |
|---|---|
| • Resale | Parity with Retail |
| • UNE | |
| • Interconnection | |

# B-2: Mean Time to Deliver Invoices

## Definition

This report measures the mean interval for timeliness of billing invoices sent to CLECs in an agreed upon format. CRIS-based invoices are measured in business days, and CABS-based invoices in calendar days.

## Exclusions

None

## Business Rules

Bill Distribution is calculated as follows: CRIS BILLS-The number of workdays is reported for CRIS bills. This is calculated by counting the Bill Period date as the first workday. Weekends and holidays are excluded when counting workdays. J/N Bills are counted in the CRIS work day category for the purposes of the measurement since their billing account number (Q account) is provided from the CRIS system.

CABS BILLS-The number of calendar days is reported for CABS bills. This is calculated by counting the day following the Bill Period date as the first calendar day. Weekends and holidays are included when counting the calendar days.

## Calculation

**Invoice Timeliness** = (a - b)

- a = Invoice Transmission Date
- b = Close Date of Scheduled Bill Cycle

**Mean Time To Deliver Invoices** = (c / d)

- c = Sum of all Invoice Timeliness intervals
- d = Count of Invoices Transmitted in Reporting Period

## Report Structure

- CLEC Specific
- CLEC Aggregate
- BellSouth Aggregate
- Geographic Scope
  - State
  - Region

## Data Retained

### Relating to CLEC Experience

- Report Month
- Invoice Type
  - UNE
  - Resale
  - Interconnection
  - State
- Invoice Transmission Count
- Date of Scheduled Bill Close

### Relating to BellSouth Performance

- Report Month
- Invoice Type
  - CRIS
  - CABS
- Invoice Transmission Count
- Date of Scheduled Bill Close

## SQM Disaggregation - Analog/Benchmark

### SQM Level of Disaggregation

Product/Invoice Type

- Resale
- UNE
- Interconnection
- State

### SQM Analog/Benchmark

- CLEC Average Delivery Intervals for both CRIS and CABS Invoices are comparable to BellSouth Average delivery for both systems.

## SEEM Measure

| SEEM | Tier I | Tier II |
|---|---|---|
| Yes | X | X |

## SEEM Disaggregation - Analog/Benchmark

| SEEM Disaggregation | SEEM Analog/Benchmark |
|---|---|
| CLEC State | Parity with Retail |
| - CRIS | |
| - CABS | |
| BST-State | |

# B-3: Usage Data Delivery Accuracy

## Definition

This measurement captures the percentage of recorded usage that is delivered error free and in an acceptable format to the appropriate Competitive Local Exchange Carrier (CLEC). These percentages will provide the necessary data for use as a comparative measurement for BellSouth performance. This measurement captures Data Delivery Accuracy rather than the accuracy of the individual usage recording.

## Exclusions

None

## Business Rules

The accuracy of the data delivery of usage records delivered by BellSouth to the CLEC must enable them to provide a degree of accuracy comparative to BellSouth bills rendered to their retail customers. If errors are detected in the delivery process, they are investigated, evaluated and documented. Errors are corrected and the data retransmitted to the CLEC.

## Calculation

**Usage Data Delivery Accuracy (Packs)** = (a - b) / a X 100 **(This calculation not ordered by the FPSC)**

- a = Total number of usage data packs sent during current month
- b = Total number of usage data packs requiring retransmission during current month

**Usage Data Delivery Accuracy (Records)** = (c - d) / c X 100

- c = Total number of usage records sent during current month
- d = Total number of usage records requiring retransmission during current month

## Report Structure

- CLEC Aggregate
- BellSouth Aggregate
- Geographic Scope
  - Region

## Data Retained

### Relating to CLEC Experience

- Report Month
- Record Type
  - BellSouth Recorded
  - Non-BellSouth Recorded
- Number of Records
- Packs

### Relating to BellSouth Performance

- Report Month
- Record Type
- Number of Records
- Packs

## SQM Disaggregation - Analog/Benchmark

| SQM Level of Disaggregation | SQM Analog/Benchmark |
|---|---|
| • Region | Parity With Retail |

## SEEM Measure

| SEEM | Tier I | Tier II |
|---|---|---|
| Yes | X | X |

## SEEM Disaggregation - Analog/Benchmark

| SEEM Disaggregation | SEEM Analog/Benchmark |
|---|---|
| • CLEC State (In Florida, SEEM is based on records) | Parity with Retail |
| • BellSouth Region | |

# B-4: Usage Data Delivery Completeness

## Definition

This measurement provides percentage of complete and accurately recorded usage data (usage recorded by BellSouth and usage recorded by other companies and sent to BellSouth for billing) that is processed and transmitted to the CLEC within thirty (30) days of the message recording date. A parity measure is also provided showing completeness of BellSouth messages processed and transmitted via CMDS. BellSouth delivers its own retail usage from recording location to billing location via CMDS as well as delivering billing data to other companies. Timeliness, Completeness and Mean Time to Deliver Usage measures are reported on the same report.

## Exclusions

None

## Business Rules

The purpose of these measurements is to demonstrate the level of quality of usage data delivered to the appropriate CLEC. Method of delivery is at the option of the CLEC.

## Calculation

**Usage Data Delivery Completeness** = (a / b) X 100

- a = Total number of Recorded usage records delivered during current month that are within thirty (30) days of the message recording date
- b = Total number of Recorded usage records delivered during the current month

## Report Structure

- CLEC Specific
- CLEC Aggregate
- Region

## Data Retained

### Relating to CLEC Experience

- Report Month
- Record Type
  - BellSouth Recorded
  - Non-BellSouth Recorded

### Relating to BellSouth Performance

- None

## SQM Disaggregation - Analog/Benchmark

| SQM Level of Disaggregation | SQM Analog/Benchmark |
|---|---|
| Region | >= 98% within 30 Calendar Days |

## SEEM Measure

| SEEM | Tier I | Tier II |
|---|---|---|
| No | | |

## SEEM Disaggregation - Analog/Benchmark

| SEEM Disaggregation | SEEM Analog/Benchmark |
|---|---|
| • Not Applicable | Not Applicable |

# B-5: Usage Data Delivery Timeliness

## Definition

This measurement provides a percentage of recorded usage data (usage recorded by BellSouth and usage recorded by other companies and sent to BellSouth for billing) that is delivered to the appropriate CLEC within six (6) calendar days from the receipt of the initial recording. A parity measure is also provided showing timeliness of BellSouth messages processed and transmitted via CMDS. Timeliness, Completeness and Mean Time to Deliver Usage measures are reported on the same report.

## Exclusions

None

## Business Rules

The purpose of this measurement is to demonstrate the level of timeliness for processing and transmission of usage data delivered to the appropriate CLEC. The usage data will be mechanically transmitted or mailed to the CLEC data processing center once daily. The Timeliness interval of usage recorded by other companies is measured from the date BellSouth receives the records to the date BellSouth distributes to the CLEC. Method of delivery is at the option of the CLEC

## Calculation

**Usage Data Delivery Timeliness Current month** = (a / b) X 100

- a = Total number of usage records sent within six (6) calendar days from initial recording/receipt
- b = Total number of usage records sent

## Report Structure

- CLEC Aggregate
- CLEC Specific
- Region

## Data Retained

### Relating to CLEC Experience

- Report Month
- Record Type
  - BellSouth Recorded
  - Non-BellSouth Recorded

### Relating to BellSouth Performance

- None

## SQM Level of Disaggregation - Analog/Benchmark

| SQM Level of Disaggregation | SQM Analog/Benchmark |
|---|---|
| • Region | >= 95% Delivered within 6 Calendar Days |

## SEEM Measure

| SEEM | Tier I | Tier II |
|---|---|---|
| No | | |

## SEEM Disaggregation - Analog/Benchmark

| SEEM Disaggregation | SEEM Analog/Benchmark |
|---|---|
| • Not Applicable | Not Applicable |

# B-6: Mean Time to Deliver Usage

## Definition

This measurement provides the average time it takes to deliver Usage Records to a CLEC. A parity measure is also provided showing timeliness of BellSouth messages processed and transmitted via CMDS. Timeliness, Completeness and Mean Time to Deliver Usage measures are reported on the same report.

## Exclusions

None

## Business Rules

The purpose of this measure is to calculate the average number of days it takes BellSouth to deliver usage data to the appropriate CLEC. The calculation reflects the differences between the date the data is transmitted or mailed to the CLEC and the date the data is generated by Customer divided by the total record volume delivery.

Each delivery record is calculated as the time, in days, between when the customer generates the call and when BellSouth delivers the usage data to the CLEC. Each delivery record is categorized by the resulting number of days.

An estimated interval is calculated for each category by taking the total number of usage data records delivered for that period and multiplying it by the total number of days in that period. The mean (average) time to deliver the usage data is calculated by summing all estimated intervals and dividing by the total number of records delivered.

> **Note:** Any usage record falling in the 30+ day interval will be added using an average figure of 31.5 days.

Usage data is mechanically transmitted or mailed to the CLEC data processing center once daily. Method of delivery is at the option of the CLEC.

## Calculation

**Delivery Interval Record =** (a - b)

- a = Date BellSouth delivers the usage data
- b = Date usage data is generated by the customer

**Estimated Interval =** (c X d)

- c = Number of records delivered in each category
- d = Number of days to deliver for the category

**Mean Time to Deliver Usage** = (e / f)

- e = Sum of all estimated intervals
- f = Total number of records delivered

## Report Structure

- CLEC Aggregate
- CLEC Specific
- Region

## Data Retained

### Relating to CLEC Experience

- Report Month
- Record Type
  - BellSouth Recorded
  - Non-BellSouth Recorded

### Relating to BellSouth Performance

- None

## SQM Level of Disaggregation - Analog/Benchmark

| SQM Level of Disaggregation | SQM Analog/Benchmark |
|---|---|
| • Region | <= 6 Days |

## SEEM Measure

| SEEM | Tier I | Tier II |
|---|---|---|
| No | | |

## SEEM Disaggregation - Analog/Benchmark

| SEEM Disaggregation | SEEM Analog/Benchmark |
|---|---|
| • Not Applicable | Not Applicable |

# B-7: Recurring Charge Completeness

## Definition

This measure captures percentage of fractional recurring charges appearing on the correct bill.

## Exclusions

None

## Business Rules

The effective date of the recurring charge must be within 30 days of the bill date for the charge to appear on the correct bill. The count of fractional recurring charges in the calculation refers to a sum of absolute total dollar values either billed on the correct bill or absolute value of total fractional recurring charges on the bill.

## Calculation

**Recurring Charge Completeness** = (a / b) X 100

- a = Count of fractional recurring charges that are on the correct bill[1]
- b = Total count of fractional recurring charges that are on the bill

[1]Correct bill = next available bill

## Report Structure

- CLEC Specific
- CLEC Aggregate
- BellSouth Aggregate

## Data Retained

### Relating to CLEC Experience

- Report Month
- Invoice Type
- Total Recurring Charges Billed
- Total Billed On Time

### Relating to BellSouth Performance

- Report Month
- Retail Analog
- Total Recurring Charges Billed
- Total Billed On Time

## SQM Level of Disaggregation - Analog/Benchmark

| SQM Level of Disaggregation | SQM Analog/Benchmark |
|---|---|
| Product/Invoice Type | |
| • Resale | Parity |
| • UNE | Benchmark 90% |
| • Interconnection | Benchmark 90% |

## SEEM Measure

| SEEM | Tier I | Tier II |
|---|---|---|
| No | | |

## SEEM Disaggregation - Analog/Benchmark

| SEEM Disaggregation | SEEM Analog/Benchmark |
|---|---|
| • Not Applicable | Not Applicable |

# B-8: Non-Recurring Charge Completeness

## Definition

This measure captures percentage of non-recurring charges appearing on the correct bill.

## Exclusions

None

## Business Rules

The effective date of the non-recurring charge must be within 30 days of the bill date for the charge to appear on the correct bill. The count of non-recurring charges in the calculation refers to a sum of absolute total dollar values either billed on the correct bill or absolute value of total non-recurring charges on the bill.

## Calculation

**Non-Recurring Charge Completeness** = (a / b) X 100

- a = Count of non-recurring charges that are on the correct bill[1]
- b = Total count of non-recurring charges that are on the bill

[1]Correct bill = next available bill

## Report Structure

- CLEC Specific
- CLEC Aggregate
- BellSouth Aggregate
- Geographic Scope
  - State

## Data Retained

### Relating to CLEC Experience

- Report Month
- Invoice Type
- Total Non-Recurring Charges Billed
- Total Billed On Time

### Relating to BellSouth Performance

- Report Month
- Retail Analog
- Total Non-Recurring Charges Billed
- Total Billed On Time

## SQM Level of Disaggregation - Analog/Benchmark

| SQM Level of Disaggregation | SQM Analog/Benchmark |
|---|---|
| Product/Invoice Type | |
| • Resale | Parity |
| • UNE | Benchmark 90% |
| • Interconnection | Benchmark 90% |

## SEEM Measure

| SEEM | Tier I | Tier II |
|---|---|---|
| No | | |

## SEEM Disaggregation - Analog/Benchmark

| SEEM Disaggregation | SEEM Analog/Benchmark |
|---|---|
| • Not Applicable | Not Applicable |

# B-9: Percent Daily Usage Feed Errors Corrected in "X" Business Days

## Definition

Measures the timely correction of Daily Usage Feed (DUF) errors in record information and Pack formats measured separately. Errors included (1) Pack Failure errors and (2) EMI content errors in records.

## Exclusions

- Usage that cannot be corrected and resent or usage that the CLEC doesn't want Retransmitted.
- CLEC Problem/Issue/File Retransmission forms disputed by BellSouth SMEs that do not result in an EMI error.
- CLEC notification received by BellSouth > 10 business days from transmission date of errored messages or packs.

## Business Rules

This measure will provide the % of errors corrected in "X" Business days.

Pack Failure errors are defined as a DUF header/trailer error containing one or more of the following conditions: Grand total records not equal to records in pack or sequence/invoice numbers for a from RAO is not sequential

EMI content errors are defined as those records with errors contained in the EMI detail records that cause a message to be unbillable by the CLEC

Only notification received via the CLEC Problem/Issue/File Retransmission form will be included in this measure. To locate the form, go to the PMAP web site (http://pmap.bellsouth.com/) and click the Documentation/Exhibits link, then select the "CLEC Problem/Issue/File Retransmission form."

When circumstances arise for multiple content errors it is not necessary for the form to be filled out in its entirety, the CLECs agree to provide sufficient information for content error research so that a thorough investigation and resolution can be completed.

For each type error condition, a new CLEC Problem/Issue/File Retransmission form should be submitted.

EMI content errors should be attached in a separate file from the CLEC Problem/Issue/File Retransmission form

Elapsed time is measured in business days.

The clock starts when BellSouth receives CLEC's Problem/Issue/File Retransmission form.

The clock stops when BellSouth provides the corrected usage to the CLEC using the predesignated DUF delivery method.

This measure applies only to CLECs that are ODUF and ADUF participants

## Calculation

**Timeliness of Daily Usage EMI Content Errors Corrected** = (a / b) X 100

- a = Total number of Daily Usage Records with EMI Content Errors Corrected in the reporting month within 10 Business Days.
- b = Total number of Daily Usage Records with EMI Content Errors corrected in reporting month.

**Timeliness of Daily Usage Pack Format Errors Corrected** = (c / d) X 100

- c = Total number of Daily Usage Packs with Format Errors Corrected in the reporting month within 4 Business Days.
- d = Total number of Daily Usage Packs with Format Errors corrected in reporting month

## Report Structure

- CLEC Specific
  - Total number of BST disputed Daily Usage Records with EMI Content Errors received in reporting month.
  - Total number of Daily Usage Records with EMI Content Errors received in reporting month.
  - Total number of BST disputed Daily Usage Packs with Format Errors received in reporting month
  - Total number of Daily Usage Packs with Format Errors received in reporting month
- CLEC Aggregate
- Geographic Scope
  - Region

## Data Retained

### Relating to CLEC Experience

- Report Month
  - BellSouth Recorded
  - Non-BellSouth Recorded

### Relating to BellSouth Performance

- None

## SQM Level of Disaggregation - Analog/Benchmark

| SQM Level of Disaggregation | SQM Analog/Benchmark |
|---|---|
| • Region | Diagnostic |

## SEEM Measure

| SEEM | Tier I | Tier II |
|---|---|---|
| No | | |

## SEEM Disaggregation - Analog/Benchmark

| SEEM Disaggregation | SEEM Analog/Benchmark |
|---|---|
| • Not Applicable | Not Applicable |

# B-10: Percent Billing Errors Corrected in "X" Business Days

## Definition

Measures timely carrier bill adjustments.

## Exclusions

Adjustments that are initiated by BellSouth

## Business Rules

This measure applies to CLEC wholesale bill adjustment requests. IXC Access billing adjustment requests are not reflected in this measure. Elapsed time is measured in business days. The clock starts when BellSouth receives the CLEC Billing Adjustment Request (BAR) form and the clock stops when BellSouth either makes an adjustment through BOCRIS or ACATS (generally next CLEC bill unless adjustment request after middle of the month) or BellSouth denies the request in BDATS or ACATS and BellSouth notifies the CLEC of the BAR resolution. BellSouth will report separately those adjustment requests that are disputed by BellSouth. (BAR form and instructions are found at www.interconnection.bellsouth.com/forms/html/billing&collections.html).

## Calculation

**Percent Billing Errors Corrected in 45 Business Days** = (a / b) X 100

- a = Number of BAR resolutions sent in 45 Business Days
- b = Total Number of BAR resolutions due in Reporting Period

## Report Structure

- CLEC Specific
- CLEC Aggregate
- Geographic Scope
  - State
  - Region

## Data Retained

### Relating to CLEC Experience

- Number of BellSouth Adjustments in 45 Business Days
- Total number of Billing Adjustment Requests in Reporting Period
- Number of Adjustments disputed by BellSouth (reported separately)

### Relating to BellSouth Performance

- None

## SQM Disaggregation - Retail Analog/Benchmark

| SQM Level of Disaggregation | SQM Analog/Benchmark |
|---|---|
| • State | 90% Billing Disputes <= 45 Business Days |

## SEEM Measure

| SEEM | Tier I | Tier II |
|---|---|---|
| Yes | X | X |

## SEEM Disaggregation - Analog/Benchmark

| SEEM Disaggregation | SEEM Analog/Benchmark |
|---|---|
| • State | 90% Billing Disputes <= 45 Business Days |

**Note:** In order to set an appropriate penalty provision, staff recommends deferring implementation of the penalty until conclusion of the commission proceeding on the remedy structure of the SEEM Plan, or 120 days, whichever comes first.

# Section 6: Operator Services and Directory Assistance

## OS-1: Speed to Answer Performance/Average Speed to Answer – Toll

### Definition

Measurement of the average time in seconds calls wait before answered by a toll operator.

### Exclusions

None

### Business Rules

The clock starts when the customer enters the queue and the clock stops when a BellSouth representative answers the call or the customer abandons the call. The length of each call is determined by measuring, using a scanning technique, and accumulating the elapsed time from the entry of a customer call into the BellSouth call management system queue until the customer call is abandoned or transferred to BellSouth personnel assigned to handle calls for assistance. The system makes no distinction between CLEC customers and BellSouth customers.

### Calculation

**Speed to Answer Performance/Average Speed to Answer – Toll** = a / b

- a = Total queue time
- b = Total calls answered

**Note**: Total queue time includes time that answered calls wait in queue as well as time abandoned calls wait in queue prior to abandonment.

### Report Structure

- Reported for the aggregate of BellSouth and CLECs
  - State

### Data Retained (on Aggregate Basis)

- For the items below, BellSouth's Performance Measurement Analysis Platform (PMAP) receives a final computation; therefore, no raw data file is available in PMAP
- Month
- Call Type (Toll)
- Average Speed of Answer

### SQM Disaggregation - Analog/Benchmark

| SQM Level of Disaggregation | SQM Analog/Benchmark |
|---|---|
| None | Parity by Design |

## SEEM Measure

| SEEM | Tier I | Tier II |
|---|---|---|
| No | | |

## SEEM Disaggregation - Analog/Benchmark

| SEEM Disaggregation | SEEM Analog/Benchmark |
|---|---|
| • Not Applicable | Not Applicable |

# OS-2: Speed to Answer Performance/Percent Answered within "X" Seconds – Toll

## Definition

Measurement of the percent of toll calls that are answered in less than ten seconds

## Exclusions

None

## Business Rules

The clock starts when the customer enters the queue and the clock stops when a BellSouth representative answers the call or the customer abandons the call. The length of each call is determined by measuring, using a scanning technique, and accumulating the elapsed time from the entry of a customer call into the BellSouth call management system queue until the customer call is abandoned or transferred to BellSouth personnel assigned to handle calls for assistance. The system makes no distinction between CLEC customers and BellSouth customers.

## Calculation

The Percent Answered within "X" Seconds measurement for toll is derived by using the BellCore Statistical Answer Conversion Tables, to convert the Average Speed to Answer measure into a percent of calls answered within "X" seconds. The BellCore Conversion Tables are specific to the defined parameters of work time, number of operators, max queue size and call abandonment rates.

## Report Structure

- Reported for the aggregate of BellSouth and CLECs
  - State

## Data Retained (on Aggregate Basis)

- For the items below, BellSouth's Performance Measurement Analysis Platform (PMAP) receives a final computation; therefore, no raw data file is available in PMAP
- Month
- Call Type (Toll)
- Average Speed of Answer

## SQM Disaggregation - Analog/Benchmark

| SQM Level of Disaggregation: | SQM Analog/Benchmark |
|---|---|
| None | Parity by Design |

## SEEM Measure

| SEEM | Tier I | Tier II |
|---|---|---|
| No | | |

## SEEM Disaggregation - Analog/Benchmark

| SEEM Disaggregation | SEEM Analog/Benchmark |
|---|---|
| • Not Applicable | Not Applicable |

# DA-1: Speed to Answer Performance/Average Speed to Answer – Directory Assistance (DA)

## Definition

Measurement of the average time in seconds calls wait before answered by a DA operator.

## Exclusions

None

## Business Rules

The clock starts when the customer enters the queue and the clock stops when a BellSouth representative answers the call or the customer abandons the call. The length of each call is determined by measuring, using a scanning technique, and accumulating the elapsed time from the entry of a customer call into the BellSouth call management system queue until the customer call is abandoned or transferred to BellSouth personnel assigned to handle calls for assistance. The system makes no distinction between CLEC customers and BellSouth customers.

## Calculation

**Speed to Answer Performance/Average Speed to Answer – Directory Assistance (DA)** = a / b

- a = Total queue time
- b = Total calls answered

**Note**: Total queue time includes time that answered calls wait in queue as well as time abandoned calls wait in queue prior to abandonment.

## Report Structure

- Reported for the aggregate of BellSouth and CLECs
  - State

## Data Retained (on Aggregate Basis)

- For the items below, BellSouth's Performance Measurement Analysis Platform (PMAP) receives a final computation; therefore, no raw data file is available in PMAP
- Month
- Call Type (DA)
- Average Speed of Answer

## SQM Level of Disaggregation - Analog/Benchmark

| SQM Level of Disaggregation | SQM Analog/Benchmark |
|---|---|
| None | Parity by Design |

## SEEM Measure

| SEEM | Tier I | Tier II |
|---|---|---|
| No | | |

## SEEM Disaggregation - Analog/Benchmark

| SEEM Disaggregation | SEEM Analog/Benchmark |
|---|---|
| • Not Applicable | Not Applicable |

# DA-2: Speed to Answer Performance/Percent Answered within "X" Seconds – Directory Assistance (DA)



## Definition

Measurement of the percent of DA calls that are answered in less than twelve seconds.

## Exclusions

None

## Business Rules

The clock starts when the customer enters the queue and the clock stops when a BellSouth representative answers the call or the customer abandons the call. The length of each call is determined by measuring, using a scanning technique, and accumulating the elapsed time from the entry of a customer call into the BellSouth call management system queue until the customer call is abandoned or transferred to BellSouth personnel assigned to handle calls for assistance. The system makes no distinction between CLEC customers and BellSouth customers.

## Calculation

The Percent Answered within "X" Seconds measurement for DA is derived by using the BellCore Statistical Answer Conversion Tables, to convert the Average Speed to Answer measure into a percent of calls answered within "X" seconds. The BellCore Conversion Tables are specific to the defined parameters of work time, number of operators, max queue size and call abandonment rates.

## Report Structure

- Reported for the aggregate of BellSouth and CLECs
  - State

## Data Retained (on Aggregate Basis)

- For the items below, BellSouth's Performance Measurement Analysis Platform (PMAP) receives a final computation; therefore, no raw data file is available in PMAP.
- Month
- Call Type (DA)
- Average Speed of Answer

## SQM Disaggregation - Analog/Benchmark

| SQM Level of Disaggregation | SQM Analog/Benchmark |
|---|---|
| None | Parity by Design |

## SEEM Measure

| SEEM | Tier I | Tier II |
|---|---|---|
| No | | |

## SEEM Disaggregation - Analog/Benchmark

| SEEM Disaggregation | SEEM Analog/Benchmark |
|---|---|
| • Not Applicable | Not Applicable |

# Section 7: Database Update Information

## D-1: Average Database Update Interval



### Definition

This report measures the interval from receipt of the database change request to the completion of the update to the database for Line Information Database (LIDB), Directory Assistance and Directory Listings.

### Exclusions

- Updates Canceled by the CLEC
- Initial update when supplemented by CLEC
- BellSouth updates associated with internal or administrative use of local services.

### Business Rules

The interval for this measure begins with the date and time stamp when a service order is completed and the completion notice is released to all systems to be updated with the order information including Directory Assistance, Directory Listings, and Line Information Database (LIDB). The end time stamp is the date and time of completion of updates to the system. This metric includes updates from stand-alone directory listing orders.

**For BellSouth Results**:

The BellSouth computation is identical to that for the CLEC with the clarifications noted below.

**Other Clarifications and Qualification:**

- For LIDB, the elapsed time for a BellSouth update is measured from the point in time when the BellSouth file maintenance process makes the LIDB update information available until the date and time reported by BellSouth that database updates are completed.
- Results for the CLECs are captured and reported at the update level by Reporting Dimension (see below).
- The Completion Date is the date upon which BellSouth issues the Update Completion Notice to the CLEC.
- If the CLEC initiates a supplement to the originally submitted update and the supplement reflects changes in customer requirements (rather than responding to BellSouth initiated changes), then the update submission date and time will be the date and time of BellSouth receipt of a syntactically correct update supplement. Update activities responding to BellSouth initiated changes will not result in changes to the update submission date and time used for the purposes of computing the update completion interval.
- Elapsed time is measured in hours and hundredths of hours rounded to the nearest tenth of an hour.
- Because this should be a highly automated process, the accumulation of elapsed time continues through off-schedule, weekends and holidays; however, scheduled maintenance windows are excluded.

### Calculation

**Update Interval** = (a - b)

- a = Completion Date and Time of Database Update
- b = Submission Date and Time of Database Change

**Average Update Interval** = (c / d)

- c = Sum of all Update Intervals
- d = Total Number of Updates Completed During Reporting Period

## Report Structure

- CLEC Specific (Under development)
- CLEC Aggregate
- BellSouth Aggregate
- Geographic Scope
  - Region

## Data Retained

### Relating to CLEC Experience

- Database File Submission Time
- Database File Update Completion Time
- CLEC Number of Submissions
- Total Number of Updates

### Relating to BellSouth Performance

- Database File Submission Time
- Database File Update Completion Time
- BellSouth Number of Submissions
- Total Number of Updates

## SQM Disaggregation - Analog/Benchmark

| SQM Level of Disaggregation | SQM Analog/Benchmark |
|---|---|
| • Database Type | Parity by Design |
| • LIDB | |
| • Directory Listings | |
| • Directory Assistance | |

## SEEM Measure

| SEEM | Tier I | Tier II |
|---|---|---|
| No | | |

## SEEM Disaggregation - Analog/Benchmark

| SEEM Disaggregation | SEEM Analog/Benchmark |
|---|---|
| • Not Applicable | Not Applicable |

# D-2: Percent Database Update Accuracy

## Definition

This report measures the accuracy of database updates by BellSouth for Line Information Database (LIDB) Directory Assistance and Directory Listings using a statistically valid sample of completed CLEC Service Orders in a manual review. This manual review is not conducted on BellSouth Service Orders.

## Exclusions

- Updates canceled by the CLEC
- Initial update when supplemented by CLEC
- CLEC orders that had CLEC errors
- BellSouth updates associated with internal or administrative use of local services.

## Business Rules

For each update reviewed during the reporting period, the original update that the CLEC sent to BellSouth is compared to the database following completion of the update by BellSouth. An update is "completed without error" if the database completely and accurately reflects the activity specified on the original and supplemental update (e.g., orders) submitted by the CLEC. Each database (e.g., LIDB, Directory Assistance and Directory Listings) should be separately tracked and reported.

A statistically valid sample of completed CLEC Service Orders is pulled each month. This metric includes updates from stand-alone directory listing orders.

## Calculation

**Percent Update Accuracy** = (a / b) X 100

- a = Number of Updates Completed Without Error
- b = Number Updates Completed

## Report Structure

- CLEC Aggregate
- CLEC Specific (not available in this report)
- BellSouth Aggregate (not available in this report)
- Geographic Scope
  - Region

## Data Retained

### Relating to CLEC Experience

- Report Month
- CLEC Order Number (so_nbr) and PON (PON)
- Local Service Request (LSR)
- Order Submission Date
- Number of Orders Reviewed

**Note**: Code in parentheses is the corresponding header found in the raw data file.

**Relating to BellSouth Performance**

- Not Applicable

## SQM Disaggregation - Analog/Benchmark

| SQM Level of Disaggregation | SQM Analog/Benchmark |
|---|---|
| • Database Type<br>- LIDB<br>- Directory Listings<br>- Directory Assistance | 95% Accurate |

## SEEM Measure

| SEEM | Tier I | Tier II |
|---|---|---|
| No | | |

## SEEM Disaggregation - Analog/Benchmark

| SEEM Disaggregation | SEEM Analog/Benchmark |
|---|---|
| • Not Applicable | Not Applicable |

# D-3: Percent NXXs and LRNs Loaded by the LERG Effective Date

## Definition

Measurement of the percent of NXX(s) and Location Routing Numbers LRN(s) loaded and tested in new end office and/or tandem switches by the Local Exchange Routing Guide (LERG) effective date when facilities are in place. BellSouth has a single provisioning process for both NXX(s) and LRN(s). In this measure BellSouth will identify whether or not a particular NXX has been flagged as LNP capable (set triggers for dips) by the LERG effective date.

## Exclusions

- Activation requests where the CLEC's interconnection arrangements and facilities are not in place by the LERG effective date.
- Expedite requests

## Business Rules

Data for the initial NXX(s) and LRN(s) in a local calling area will be based on the LERG effective date or completion of the initial interconnection trunk group(s), whichever is longer. Data for additional NXX(s) in the local calling area will be based on the LERG effective date. The LERG effective date is loaded into the system at the request of the CLEC. It is contingent upon the CLEC to engineer, order, and install interconnection arrangements and facilities prior to that date.

The total Count of NXX(s) and LRN(s) that were scheduled to be loaded and those that were loaded by the LERG effective date in BellSouth switches will be captured in the Work Force Administration - Dispatch In database.

An LRN is assigned by the owner of the switch and is placed into the software translations for every switch to be used as an administrative pointer to route NXX(s) in LNP capable switches. The LRN is a result of Local Number Porting and is housed in a national database provided by the Number Portability Administration Center (NPAC). The switch owner is responsible for notifying NPAC and requesting the effective date that will be reflected in the LERG. The national database downloads routing tables into BellSouth's Service Control Point (SCP) regional databases, which are queried by switches when routing ported numbers.

The basic NXX routing process includes the addition of all NXX(s) in the response translations. This addition to response translations is what supports LRN routing. Routing instructions for all NXX(s), including LRN(s), are received from the Advance Routing & Trunking System (ARTS) and all routing, including response, is established based on the information contained in the Translation Work Instructions (TWINs) document.

## Calculation

**Percent NXXs/LRNs Loaded and Tested Prior to the LERG Effective Date** = (a / b) X 100

- a = Count of NXXs and LRNs loaded by the LERG effective date
- b = Total NXXs and LRNs to be scheduled and loaded by the LERG effective date

## Report Structure

- CLEC Specific
- CLEC Aggregate
- BellSouth (Not Applicable)
- Geographic Scope
  - Region

## Data Retained

### Relating to CLEC Experience

- Company Name
- Company Code
- NPA/NXX
- LERG Effective Date
- Loaded Date

### Relating to BellSouth Performance

- Not Applicable

## SQM Disaggregation - Analog/Benchmark

| SQM Level of Disaggregation | SQM Analog/Benchmark |
|---|---|
| • Geographic Scope<br>- Region | 100% by LERG Effective Date |

## SEEM Measure

| SEEM | Tier I | Tier II |
|---|---|---|
| No | | |

## SEEM Disaggregation - Analog/Benchmark

| SEEM Disaggregation | SEEM Analog/Benchmark |
|---|---|
| • Not Applicable | Not Applicable |

# Section 8: E911

## E-1: Timeliness



### Definition

Measures the percent of batch orders for E911 database updates (to CLEC resale and BellSouth retail records) processed successfully within a 24-hour period.

### Exclusions

- Any resale order canceled by a CLEC
- Facilities-based CLEC orders

### Business Rules

The 24-hour processing period is calculated based on the date and time processing starts on the batch orders and the date and time processing stops on the batch orders. Mechanical processing starts when SCC (the BellSouth E911 vendor) receives E911 files containing batch orders extracted from the BellSouth Service Order Control System (SOCS). Processing stops when SCC loads the individual records to the E911 database. The E911 database includes updates to the Automatic Location Identification (ALI) database. The system makes no distinction between CLEC resale records and BellSouth retail records.

### Calculation

**E911 Timeliness** = (a / b) X 100

- a = Number of batch orders processed within 24 hours
- b = Total number of batch orders submitted

### Report Structure

Reported for the aggregate of CLEC resale updates and BellSouth retail updates

- State
- Region

### Data Retained

- Report Month
- Aggregate Data

### SQM Disaggregation - Analog/Benchmark

| SQM Level of Disaggregation | SQM Analog/Benchmark |
|---|---|
| None | Parity by Design |

### SEEM Measure

| SEEM | Tier I | Tier II |
|---|---|---|
| No | | |

## SEEM Disaggregation - Analog/Benchmark

| SEEM Disaggregation | SEEM Analog/Benchmark |
|---|---|
| • Not Applicable | Not Applicable |

# E-2: Accuracy

## Definition

Measures the percent of E911 telephone number (TN) record updates (to CLEC resale and BellSouth retail records) processed successfully for E911 (including the Automatic Location Identification (ALI) database).



## Exclusions

- Any resale order canceled by a CLEC
- Facilities-based CLEC orders

## Business Rules

Accuracy is based on the number of records processed without error at the conclusion of the processing cycle. Mechanical processing starts when SCC (the BellSouth E911 vendor) receives E911 files containing telephone number (TN) records extracted from BellSouth's Service Order Control System (SOCS). The system makes no distinction between CLEC resale records and BellSouth retail records.

## Calculation

**E911 Accuracy** = (a / b) X 100

- a = Number of record individual updates processed with no errors
- b = Total number of individual record updates

## Report Structure

Reported for the aggregate of CLEC resale updates and BellSouth retail updates

- State
- Region

## Data Retained

- Report Month
- Aggregate Data

## SQM Disaggregation - Analog/Benchmark

| SQM Level of Disaggregation | SQM Analog/Benchmark |
|---|---|
| • None | Parity by Design |

## SEEM Measure

| SEEM | Tier I | Tier II |
|---|---|---|
| No | | |

## SEEM Disaggregation - Analog/Benchmark

| SEEM Disaggregation | SEEM Analog/Benchmark |
|---|---|
| • Not Applicable | Not Applicable |

# E-3: Mean Interval

## Definition

Measures the mean interval processing of E911 batch orders (to update CLEC resale and BellSouth retail records) including processing against the Automatic Location Identification (ALI) database.

## Exclusions

- Any resale order canceled by a CLEC
- Facilities-based CLEC orders

## Business Rules

The processing period is calculated based on the date and time processing starts on the batch orders and the date and time processing stops on the batch orders. Data is posted is 4-hour increments up to and beyond 24 hours. The system makes no distinction between CLEC resale records and BellSouth retail records.

## Calculation

**E911 Interval** = (a - b)

- a = Date and time of batch order completion
- b = Date and time of batch order submission

**E911 Mean Interval** = (c / d)

- c = Sum of all E911 Intervals
- d = Number of batch orders completed

## Report Structure

Reported for the aggregate of CLEC resale updates and BellSouth retail updates

- State
- Region

## Data Retained

- Report Month
- Aggregate Data

## SQM Disaggregation - Analog/Benchmark

| SQM Level of Disaggregation | SQM Analog/Benchmark |
|---|---|
| None | Parity by Design |

## SEEM Measure

| SEEM | Tier I | Tier II |
|---|---|---|
| No | | |

## SEEM Disaggregation - Analog/Benchmark

| SEEM Disaggregation | SEEM Analog/Benchmark |
|---|---|
| • Not Applicable | Not Applicable |

# Section 9: Trunk Group Performance

## TGP-1: Trunk Group Performance-Aggregate

### Definition

The Trunk Group Performance report displays, over a reporting cycle, aggregate, average trunk group blocking data for each hour of each day of the reporting cycle, for both CLEC affecting and BellSouth affecting trunk groups.

### Exclusions

- Trunk Groups blocked due to unanticipated significant increase in CLEC traffic
- Orders that are delayed or refused by CLEC
- Trunk Groups for which there was no valid data available for an entire study period
- Duplicate trunk group information
- Trunk Groups blocked due to CLEC network/equipment failure
- Final Groups actually overflowing, not blocked

### Business Rules

The purpose of the Trunk Group Performance Report is to provide trunk blocking measurements on CLEC and BellSouth trunk groups for comparison only. It is not the intent of the report that it be used for network management and/or engineering. BellSouth should notify the CLEC when such blocking meets this exclusion criteria (orders that are delayed or refused by the CLEC) and report the results, both with and without the exclusions. An unanticipated significant increase in traffic is indicated by a 20% increase for small trunk groups or 1800 CCS for large groups over the previous months traffic when the increase was not forecasted by the CLEC.

**Monthly Average Blocking**:

- The reporting cycle includes both business and non-business days in a calendar month.
- Monthly average blocking values are calculated for each trunk group for each of the 24 time consistent hours across a reporting cycle.

**Aggregate Monthly Blocking**:

- Used to compare aggregate blocking across trunk groups which terminate traffic at CLEC points of presence versus BellSouth switches.
- Aggregate monthly blocking data is calculated for each hour of the day across all trunk groups assigned to a category.

**Trunk Categorization**:

- This report displays, over a reporting cycle, aggregate, average blocking data for each hour of a day. Therefore, for each reporting cycle, 24 blocking data points are generated for two aggregate groups of selected trunk groups. These groups are CLEC affecting and BellSouth affecting trunk groups. In order to assign trunk groups to each aggregate group, all trunk groups are first assigned to a category. A trunk group's end points and the type of traffic that is transmitted on it define a category. Selected categories of trunk groups are assigned to the aggregate groups so that trunk reports can be generated. The categories to which trunk groups have been assigned for this report are as follows.

**CLEC Affecting Categories**:

| | Point A | Point B |
|---|---|---|
| Category 1: | BellSouth End Office | BellSouth Access Tandem |
| Category 3: | BellSouth End Office | CLEC Switch |
| Category 4: | BellSouth Local Tandem | CLEC Switch |
| Category 5: | BellSouth Access Tandem | CLEC Switch |

Category 10:..... BellSouth End Office ..... BellSouth Local Tandem

Category 16:..... BellSouth Tandem..... BellSouth Tandem

**BellSouth Affecting Categories**:

| | Point A | Point B |
|---|---|---|
| Category 1: | BellSouth End Office | BellSouth Access Tandem |
| Category 9: | BellSouth End Office | BellSouth End Office |
| Category 10: | BellSouth End Office | BellSouth Local Tandem |
| Category 16: | BellSouth Tandem | BellSouth Tandem |

## Calculation

**Monthly Average Blocking:**

- For each hour of the day, each day's raw data are summed across all valid measurements days in a report cycle for blocked and attempted calls.
- The sum of the blocked calls is divided by the total number of calls attempted in a reporting period.

**Aggregate Monthly Blocking**:

- For each hour of the day, the monthly sums of the blocked and attempted calls from each trunk group are separately aggregated over all trunk groups within each assigned category.
- The total blocked calls is divided by the total call attempts within a group to calculate an aggregate monthly blocking for each assigned group.
- The result is an aggregate monthly average blocking value for each of the 24 hours by group.
- The difference between the CLEC and BellSouth affecting trunk groups are also calculated for each hour.

## Report Structure

- CLEC Aggregate
- BellSouth Aggregate
  - State
- With and Without Exclusion for Orders Delayed or Refused by CLEC

## Data Retained

### Relating to CLEC Experience

- Report Month
- Total Trunk Groups
- Number of Trunk Groups by CLEC
- Hourly Blocking Per Trunk Group
- Hourly Usage Per Trunk Group
- Hourly Call Attempts Per Trunk Group

### Related to BellSouth Performance

- Report Month
- Total Trunk Groups
- Aggregate Hourly Blocking Per Trunk Group
- Hourly Usage Per Trunk Group
- Hourly Call Attempts Per Trunk Group

## SQM Disaggregation - Analog/Benchmark

| SQM Level of Disaggregation | SQM Analog/Benchmark |
|---|---|
| • CLEC Aggregate | Any consecutive 2 hour period in 24 hours where CLEC blockage exceeds BellSouth blockage by more than 0.5% using trunk groups 1, 3, 4, 5, 10, 16 for CLECs and 9 for BellSouth |
| • BellSouth Aggregate | |

## SEEM Measure

| SEEM | Tier I | Tier II |
|---|---|---|
| Yes | | X |

## SEEM Disaggregation - Analog/Benchmark

| SEEM Disaggregation | SEEM Analog/Benchmark |
|---|---|
| • CLEC Aggregate | Any consecutive 2 hour period in 24 hours where CLEC blockage exceeds BellSouth blockage by more than 0.5% using trunk groups 1,3,4,5,10,16 for CLECs and 9 for BellSouth |
| • BellSouth Aggregate | |

# TGP-2: Trunk Group Performance – CLEC Specific

## Definition

The Trunk Group Performance report displays, over a reporting cycle, CLEC specific, average trunk group blocking data for each hour of each day of the reporting cycle, for both CLEC affecting and BellSouth affecting trunk groups.

## Exclusions

- Trunk Groups blocked due to unanticipated significant increase in CLEC traffic
- Orders that are delayed or refused by CLEC
- Trunk Groups for which there was no valid data available for an entire study period
- Duplicate trunk group information
- Trunk Groups blocked due to CLEC network/equipment failure
- Final Groups actually overflowing not blocked

## Business Rules

The purpose of the Trunk Group Performance Report is to provide trunk blocking measurements on CLEC and BellSouth trunk groups for comparison only. It is not the intent of the report that it be used for network management and/or engineering. BellSouth should notify the CLEC when such blocking meets this exclusion criteria (orders that are delayed or refused by the CLEC) and report the results, both with and without the exclusions. An unanticipated significant increase in traffic is indicated by a 20% increase for small trunk groups or 1800 CCS for large groups over the previous months traffic when the increase was not forecasted by the CLEC.

**Monthly Average Blocking**:

- The reporting cycle includes both business and non-business days in a calendar month.
- Monthly average blocking values are calculated for each trunk group for each of the 24 time consistent hours across a reporting cycle.

**Aggregate Monthly Blocking**:

- Used to compare aggregate blocking across trunk groups which terminate traffic at CLEC points of presence versus BellSouth switches.
- Aggregate monthly blocking data is calculated for each hour of the day across all trunk groups assigned to a category.

**Trunk Categorization**:

- This report displays, over a reporting cycle, aggregate, average blocking data for each hour of a day. Therefore, for each reporting cycle, 24 blocking data points are generated for two aggregate groups of selected trunk groups. These groups are CLEC affecting and BellSouth affecting trunk groups. In order to assign trunk groups to each aggregate group, all trunk groups are first assigned to a category. A trunk group's end points and the type of traffic that is transmitted on it define a category. Selected categories of trunk groups are assigned to the aggregate groups so that trunk reports can be generated. The categories to which trunk groups have been assigned for this report are as follows.

**CLEC Affecting Categories**:

| | Point A | Point B |
|---|---|---|
| Category 1: | BellSouth End Office | BellSouth Access Tandem |
| Category 3: | BellSouth End Office | CLEC Switch |
| Category 4: | BellSouth Local Tandem | CLEC Switch |
| Category 5: | BellSouth Access Tandem | CLEC Switch |
| Category 10: | BellSouth End Office | BellSouth Local Tandem |

Category 16:..... BellSouth Tandem..... BellSouth Tandem

**BellSouth Affecting Categories**:

| | Point A | Point B |
|---|---|---|
| Category 1: | BellSouth End Office | BellSouth Access Tandem |
| Category 9: | BellSouth End Office | BellSouth End Office |
| Category 10: | BellSouth End Office | BellSouth Local Tandem |
| Category 16: | BellSouth Tandem | BellSouth Tandem |

## Calculation

**Monthly Average Blocking**:

- For each hour of the day, each day's raw data are summed across all valid measurements days in a report cycle for blocked and attempted calls.
- The sum of the blocked calls is divided by the total number of calls attempted in a reporting period.

**Aggregate Monthly Blocking**:

- For each hour of the day, the monthly sums of the blocked and attempted calls from each trunk group are separately aggregated over all trunk groups within each assigned category.
- The total blocked calls is divided by the total call attempts within a group to calculate an aggregate monthly blocking for each assigned group.
- The result is an aggregate monthly average blocking value for each of the 24 hours by group.
- The difference between the CLEC and BellSouth affecting trunk groups are also calculated for each hour.

## Report Structure

- CLEC Specific
  - State
- With and Without Exclusion for Orders Delayed or Refused by CLEC

## Data Retained

### Relating to CLEC Experience

- Report Month
- Total Trunk Groups
- Number of Trunk Groups by CLEC
- Hourly Blocking Per Trunk Group
- Hourly Usage Per Trunk Group
- Hourly Call Attempts Per Trunk Group

### Relating to BellSouth Performance

- Report Month
- Total Trunk Groups
- Aggregate Hourly Blocking Per Trunk Group
- Hourly Usage Per Trunk Group
- Hourly Call Attempts Per Trunk Group

## SQM Disaggregation - Analog/Benchmark

| SQM Level of Disaggregation | SQM Analog/Benchmark |
|---|---|
| • CLEC Trunk Group | Any 2 consecutive hour period in 24 hours where CLEC blockage exceeds BellSouth blockage by more than 0.5% using trunk groups 1, 3, 4, 5, 10, 16 for CLECs and 9 for BellSouth |

## SEEM Measure

| SEEM | Tier I | Tier II |
|---|---|---|
| Yes | X | |

## SEEM Disaggregation - Analog/Benchmark

| SEEM Disaggregation | SEEM Analog/Benchmark |
|---|---|
| • CLEC Trunk Group | Any 2 consecutive hour period in 24 hours where CLEC blockage exceeds BellSouth blockage by more than 0.5% using trunk groups 1, 3, 4, 5, 10, 16 for CLECs and 9 for BellSouth |
| • BellSouth Trunk Group | |

# Section 10: Collocation

## C-1: Collocation Average Response Time



### Definition

Measures the average time (counted in calendar days) from the receipt of a complete and accurate collocation application (including receipt of application fee if required) to the date BellSouth returns a response electronically or in writing. Within the number of calendar days as designated by the Collocation order after having received a bona fide application for physical collocation, BellSouth must respond with space availability and a price quote.

### Exclusions

Any application canceled by the CLEC

### Business Rules

The clock starts on the date that BellSouth receives a complete and accurate collocation application accompanied by the appropriate application fee if required. The clock stops on the date that BellSouth returns a response. The clock will restart upon receipt of changes to the original application request.

### Calculation

**Response Time** = (a - b)

- a = Request Response Date
- b = Request Submission Date

**Average Response Time** = (c / d)

- c = Sum of all Response Times
- d = Count of Responses Returned within Reporting Period

### Report Structure

- Individual CLEC (alias) aggregate
- Aggregate of all CLECs
- Geographic Scope
  - State

### Data Retained

- Report period
- Aggregate data

### SQM Disaggregation - Analog/Benchmark

| SQM Level of Disaggregation | SQM Analog/Benchmark |
|---|---|
| State | Virtual - 15 Calendar Days |
| Virtual-Initial | Physical Caged - 15 Calendar Days |
| Virtual-Augment | Physical Cageless - 15 Calendar Days |
| Physical Caged-Initial | |
| Physical Caged-Augment | |
| Physical-Cageless-Initial | |
| Physical Cageless-Augment | |

## SEEM Measure

| SEEM | Tier I | Tier II |
|---|---|---|
| No | | |

## SEEM Disaggregation - Analog/Benchmark

| SEEM Disaggregation | SEEM Analog/Benchmark |
|---|---|
| • Not Applicable | Not Applicable |

# C-2: Collocation Average Arrangement Time

## Definition

Measures the average time (counted in calendar days) from receipt of a complete and accurate Bona Fide firm order (including receipt of appropriate fee if required) to the date BellSouth completes the collocation arrangement and notifies the CLEC.

## Exclusions

Any Bona Fide firm order canceled by the CLEC

## Business Rules

The clock starts on the date that BellSouth receives a complete and accurate Bone Fide firm order accompanied by the appropriate fee. The clock stops on the date that BellSouth completes the collocation arrangement and notifies the CLEC. The cable assignments associated with the specific collocation request will be provided prior to completion of the arrangement.

## Calculation

**Arrangement Time** = (a - b)

- a = Date Collocation Arrangement is Complete
- b = Date Order for Collocation Arrangement Submitted

**Average Arrangement Time** = (c / d)

- c = Sum of all Arrangement Times
- d = Total Number of Collocation Arrangements Completed during Reporting Period

## Report Structure

- Individual CLEC (alias) Aggregate
- Aggregate of all CLECs
- Geographic Scope
  - State

## Data Retained

- Report Period
- Aggregate Data

## SQM Disaggregation - Analog/Benchmark

| SQM Level of Disaggregation | SQM Analog/Benchmark |
|---|---|
| • State | Virtual - 60 Calendar Days |
| • Virtual-Initial | Virtual-Augment - 60 Calendar Days (Without Space Increase) |
| • Virtual-Augment | Virtual-Augment - 60 Calendar Days (With Space Increase) |
| • Physical Caged-Initial | Physical Caged - 90 Calendar Days (Ordinary) |
| • Physical Caged-Augment | Physical Caged-Augment - 45 Calendar Days (Without Space Increase) |
| • Physical Cageless-Initial | Physical Caged-Augment - 90 Calendar Days (With Space Increase) |
| • Physical Cageless-Augment | Physical Cageless - 90 Calendar Days<br>Physical Cagedless-Augment - 45 Calendar Days (Without |

Space Increase)
Physical Cagedless-Augment - 90 Calendar Days (With Space Increase)

## SEEM Measure

| SEEM | Tier I | Tier II |
|---|---|---|
| No | | |

## SEEM Disaggregation - Analog/Benchmark

| SEEM Disaggregation | SEEM Analog/Benchmark |
|---|---|
| • Not Applicable | Not Applicable |

# C-3: Collocation Percent of Due Dates Missed

## Definition

Measures the percent of missed due dates for both virtual and physical collocation arrangements

## Exclusions

Any Bona Fide firm order canceled by the CLEC

## Business Rules

Percent Due Dates Missed is the percent of total collocation arrangements which BellSouth is unable to complete by end of the BellSouth committed due date. The arrangement is considered a missed due date if it is not completed on or before the committed due date.

## Calculation

**% of Due Dates Missed** = (a / b) X 100

- a = Number of Completed Orders that were not completed by BellSouth Committed Due Date during Reporting Period
- b = Number of Orders Completed in Reporting Period

## Report Structure

- Individual CLEC (alias) aggregate
- Aggregate of all CLECs
- Geographic Scope
  - State

## Data Retained

- Report Period
- Aggregate Data

## SQM Disaggregation - Analog/Benchmark

| SQM Level of Disaggregation | SQM Analog/Benchmark |
|---|---|
| State | >= 95% on time |
| Virtual-Initial | |
| Virtual- Augment | |
| Physical Caged- Initial | |
| Physical Caged- Augment | |
| Physical Cageless- Initial | |
| Physical Cageless- Augment | |

## SEEM Measure

| SEEM | Tier I | Tier II |
|---|---|---|
| Yes | X | X |

## SEEM Disaggregation - Analog/Benchmark

| SEEM Disaggregation | SEEM Analog/Benchmark |
|---|---|
| • All Collocation Arrangements | >= 95% on time |

# Section 11: Change Management

## CM-1: Timeliness of Change Management Notices

### Definition

Measures whether CLECs receive required software release notices on time to prepare for BellSouth interface/system changes so CLEC interfaces are not impaired by change.

### Exclusions

- Changes to release dates for reasons outside BellSouth control, such as the system software vendor changes. For example: a patch to fix a software problem.
- Type 6 Change Requests (Defects/Expedites), as defined by the Change Control Process (CCP)

### Business Rules

This metric is designed to measure the percent of change management notices sent to the CLECs according to notification standards and time frames set forth in the Change Control Process. The CCP is used by BellSouth and the CLECs to manage requested changes to the BellSouth Local Interfaces.

The clock starts on the notification date. The clock stops on the software release date. When project events occur (scope changes, analysis information, etc.), the software release date may change. A revised notification would be required and the clock would restart. Based on release constraints for defects/expedites, notification may be less than the agreed upon interval in the CCP for new features.

### Calculation

**Timeliness of Change Management Notices** = (a / b) X 100

- a = Total number of Change Management Notifications Sent Within Required Time frames
- b = Total Number of Change Management Notifications Sent

### Report Structure

- BellSouth Aggregate
- Geographic Scope
  - Region

### Data Retained

- Report Period
- Notice Date
- Release Date

### SQM Disaggregation - Analog/Benchmark

| SQM Level of Disaggregation | SQM Analog/Benchmark |
|---|---|
| • Region | 98% on time |

### SEEM Measure

| SEEM | Tier I | Tier II |
|---|---|---|
| Yes | | X |

## SEEM Disaggregation - Analog/Benchmark

| SEEM Disaggregation | SEEM Analog/Benchmark |
|---|---|
| • Region | 98% on time |

# CM-2: Change Management Notice Average Delay Days

## Definition

Measures the average delay days for change management system release notices sent outside the time frame set forth in the Change Control Process.

## Exclusions

- Changes to release dates for reasons outside BellSouth control, such as the system vendor
- Type 6 Change Requests (Defects/Expedites), as defined by the Change Control Process

## Business Rules

This metric is designed to compute the average delay days for change management notices sent to the CLECs outside the time frames set forth in the Change Control Process. The CCP is used by BellSouth and the CLECs to manage requested changes to the BellSouth Local Interfaces.

The clock starts on the notification due date. The clock stops on the software release date. When project events occur (scope changes, analysis information, etc.), the software release date may change. A revised notification would be required and the clock would restart. Based on release constraints for defects/expedites, notification may be less than the agreed upon interval in the CCP for new features

## Calculation

**Change Management Notice Delay Days** = (a - b)

- a = Date Notice Sent
- b = Date Notice Due

**Change Management Notice Average Delay Days** = (c / d)

- c = Sum of all Change Management Notice Delay Days
- d = Total Number of Notices Sent Late

## Report Structure

- BellSouth Aggregate
- Geographic Scope
  - Region

## Data Retained

- Report Period
- Notice Date
- Release Date

## SQM Disaggregation - Analog/Benchmark

| SQM Level of Disaggregation | SQM Analog/Benchmark |
|---|---|
| Region | <= 5 Days |

## SEEM Measure

| SEEM | Tier I | Tier II |
|---|---|---|
| No | | |

## SEEM Disaggregation - Analog/Benchmark

| SEEM Disaggregation | SEEM Analog/Benchmark |
|---|---|
| • Not Applicable | Not Applicable |

# CM-3: Timeliness of Documents Associated with Change

## Definition

Measures whether CLECs received requirements or business rule documentation on time to prepare for BellSouth interface/system changes so CLEC interfaces are not impaired by change.

## Exclusions

- Documentation for release dates that slip less than 30 days for a change mandated by regulatory or legal entities (Federal Communications Commission [FCC], a state commission/authority, or state and federal courts) or CLEC request.
- Type 6 Change Requests (Defects/Expedites), as defined by the Change Control Process.

## Business Rules

This metric is designed to measure the percent of requirements or business rule documentation sent to the CLECs according to documentation standards and time frames set forth in the Change Control Process, a copy of which can be found at http://www.interconnection.bellsouth.com/markets/lec/ccp_live/index.html. The CCP is used by BellSouth and the CLECs to manage requested changes to the BellSouth Local Interfaces.

The clock starts on the business rule documentation release date. The clock stops on the software release date. When project events occur (scope changes, analysis information, etc.), the software release date may change. Revisions to documentation could be required and the clock would restart.

## Calculation

**Timeliness of Documents Associated with Change** = (a / b) X 100

- a = Change Management Documentation Sent Within Required Time frames after Notices
- b = Total Number of Change Management Documentation Sent

## Report Structure

- BellSouth Aggregate
- Geographic Scope
  - Region

## Data Retained

- Report Period
- Notice Date
- Release Date

## SQM Disaggregation - Analog/Benchmark

| SQM Level of Disaggregation | SQM Analog/Benchmark |
|---|---|
| • Region | 98% on Time |

## SEEM Measure

| SEEM | Tier I | Tier II |
|---|---|---|
| Yes | | X |

## SEEM Disaggregation - Analog/Benchmark

| SEEM Disaggregation | SEEM Analog/Benchmark |
|---|---|
| • Region | 98% on Time |

# CM-4: Change Management Documentation Average Delay Days

## Definition

Measures the average delay days for requirements or business rule documentation sent outside the time frames set forth in the Change Control Process.

## Exclusions

- Documentation for release dates that slip less than 30 days for reasons outside BellSouth control, such as changes due to Regulatory mandate or CLEC request.
- Type 6 Change Requests (Defects/Expedites), as defined by the Change Control Process.

## Business Rules

This metric is designed to compute the average delay days for business rule documentation sent to the CLECs outside the time frames set forth in the Change Control Process. The CCP is used by BellSouth and the CLECs to manage requested changes to the BellSouth Local Interfaces.

The clock starts on the business rule documentation release date. The clock stops on the software release date. When project events occur (scope changes, analysis information, etc.), the software release date may change. Revisions to documentation could be required and the clock would restart.

## Calculation

**Change Management Documentation Delay Days** = (a - b)

- a = Date Documentation Provided
- b = Date Documentation Due

**Change Management Documentation Average Delay Days** = (c / d)

- c = Sum of all CM Documentation Delay Days
- d = Total Change Management Documents Sent

## Report Structure

- BellSouth Aggregate
- Geographic Scope
  - Region

## Data Retained

- Report Period
- Notice Date
- Release Date

## SQM Disaggregation - Analog/Benchmark

| SQM Level of Disaggregation | SQM Analog/Benchmark |
|---|---|
| • Region | <= 5 Days |

## SEEM Measure

| SEEM | Tier I | Tier II |
|---|---|---|
| No | | |

## SEEM Disaggregation - Analog/Benchmark

| SEEM Disaggregation | SEEM Analog/Benchmark |
|---|---|
| • Not Applicable | Not Applicable |

# CM-5: Notification of CLEC Interface Outages

## Definition

Measures the time it takes BellSouth to notify the CLEC of an outage of an interface.

## Exclusions

None

## Business Rules

This metric measures the process of notifying CLECs of an interface outage as defined by the Change Control Process Documentation. BellSouth has 15 minutes to notify the CLECs via email, once the Help Desk has verified the existence of an outage. An outage is verified to exist when on or more of the following conditions occur:

1. BellSouth can duplicate a CLEC reported error.
2. BellSouth finds an error message within the system error log that identifiably matches a CLEC reported outage.
3. When 3 or more CLECs report the identical type of outage.
4. BellSouth detects a problem due to the loss of functionality for users of a system.

**Note:** The 15 minute clock begins once a CLEC reported or a BellSouth detected outage has lasted for 20 minutes and has been verified. If the outage is not verified within 20 minutes, the clock begins at the point of verification.

This metric will be expressed as a percentage.

## Calculation

**Notification of CLEC Interface Outages** = (a / b) X 100

- a = Number of Interface Outages where CLECs are notified within 15 minutes
- b = Total Number of Interface Outages

## Report Structure

- CLEC Aggregate
- Geographic Scope
  - Region

## Data Retained

### Relating to CLEC Experience

- Number of Interface Outages
- Number of Notifications <= 15 minutes

### Relating to BellSouth Performance

- Not Applicable

## SQM Disaggregation - Analog/Benchmark

| SQM Level of Disaggregation | SQM Analog/Benchmark |
|---|---|
| • By interface type for all interfaces accessed by CLECs | 97% <= 15 Minutes |

| Interface | Applicable to |
|---|---|
| EDI | CLEC |
| CSOTS | CLEC |
| LENS | CLEC |
| TAG | CLEC |
| ECTA | CLEC |
| TAFI | CLEC/BellSouth |

## SEEM Measure

| SEEM | Tier I | Tier II |
|---|---|---|
| No | | |

## SEEM Disaggregation - Analog/Benchmark

| SEEM Disaggregation | SEEM Analog/Benchmark |
|---|---|
| • Not Applicable | Not Applicable |

# CM-6: Percent of Software Errors Corrected in "X" (10, 30, 45) Business Days

## Definition

Measures the percent of all outstanding Software Errors due and overdue to be corrected by BellSouth in "X" (10, 30, 45) business days within the monthly report period.

## Exclusions

- Software Corrections having implementation intervals that are longer than those defined in this measure and agreed upon by the CLECs
- Rejected or reclassified software errors (BellSouth must report the number of rejected or reclassified software errors disputed by the CLECs)

## Business Rules

This metric is designed to measure BellSouth's performance each month in correcting identified Software Errors within the specified interval. The clock starts when a Software Error validated per the Change Control Process, a copy of which can be found at http://www.interconnection.bellsouth.com/markets/lec/ccp_live/index.html, and stops when the error is corrected and notice posted to the Change Control Website. The monthly report should include all defects due and overdue to be corrected within the report period. Software defects are defined as Type 6 Change Requests in the Change Control Process.

## Calculation

**Percent of Software Errors Corrected in "X" (10, 30, 45) Business Days** = (a / b) X 100

- a = Total number of Software Errors Corrected where "X" = 10, 30, or 45 Business Days.
- b = Total number of Software Errors requiring correction where "X" = 10, 30, or 45 Business Days.

## Report Structure

- Severity 2 = 10 Business Days
- Severity 3 = 30 Business Days
- Severity 4 = 45 Business Days

## Data Retained

- Report Period
- Total Completed
- Total Completed within "X" Business Days
- Disputed, Rejected or Reclassified Software Errors

## SQM Level of Disaggregation - Analog/Benchmark

| SQM Level of Disaggregation | SQM Analog/Benchmark |
|---|---|
| • Region | 95% within interval |

## SEEM Measure

| SEEM | Tier I | Tier II |
|---|---|---|
| Yes | | X |

## SEEM Disaggregation - Analog/Benchmark

| SEEM Disaggregation | SEEM Analog/Benchmark |
|---|---|
| • Region | 95% within interval |

# CM-7: Percent of Change Requests Accepted or Rejected within 10 Days

## Definition

Measures the percent of Change Requests other than Type 1 or Type 6 Change Requests, submitted by CLECs that are Accepted or Rejected by BellSouth in 10 business days within the report period.

## Exclusions

- Change Requests that are canceled or withdrawn before a response from BellSouth is due.

## Business Rules

The Acceptance/Rejection interval starts when the acknowledgement is due to the CLEC per the Change Control Process, a copy of which can be found at http://www.interconnection.bellsouth.com/markets/lec/ccp_live/index.html. The clock ends when BellSouth issues an acceptance or rejection notice to the CLEC. This metric includes all change requests not subject to the above exclusions, not just those received and accepted or rejected in the reporting period.

## Calculation

**Percent of Change Requests Accepted or Rejected within 10 Business Days** = (a / b) X 100

- a = Total number of Change Requests accepted or rejected within 10 business days
- b = Total number of Change Requests submitted in the reporting period

## Report Structure

- BellSouth Aggregate

## Data Retained

- Report Period
- Requests Accepted or Rejected
- Total Requests

## SQM Level of Disaggregation - Analog/Benchmark

| SQM Level of Disaggregation | SQM Analog/Benchmark |
|---|---|
| • Region | 95% within interval |

## SEEM Measure

| SEEM | Tier I | Tier II |
|---|---|---|
| Yes | | X |

## SEEM Disaggregation - Analog/Benchmark

| SEEM Disaggregation | SEEM Analog/Benchmark |
|---|---|
| • Region | 95% within interval |

# CM-8: Percent Change Requests Rejected



## Definition

Measures the percent of Change Requests (other than Type 1 or Type 6 Change Requests) submitted by CLECs that are rejected by reason within the report period.

## Exclusions

- Change Requests that are canceled or withdrawn before a response from BellSouth is due.

## Business Rules

This metric includes any rejected change requests in the reporting period, regardless of whether received early or late. The metric will be disaggregated by major categories of rejections per the Change Control Process, a copy of which can be found at http://www.interconnection.bellsouth.com/markets/lec/ccp_live/index.html. These reasons are: Cost, Technical Feasibility, and Industry Direction. This metric includes all change requests not subject to the above exclusions, not just those received and accepted or rejected in the same reporting period.

## Calculation

**Percent Change Requests Rejected** = (a / b) X 100

- a = Total number of Change Requests rejected
- b = Total number of Change Requests submitted within the report period

## Report Structure

- BellSouth Aggregate
- Cost
- Technical Feasibility

## Data Retained

- Report Period
- Requests Rejected
- Total Requests

## SQM Level of Disaggregation - Analog/Benchmark

| SQM Level of Disaggregation | SQM Analog/Benchmark |
|---|---|
| Region | Diagnostic |
| Reason – Cost | |
| Reason – Technical Feasibility | |
| Reason – Industry Direction | |

## SEEM Measure

| SEEM | Tier I | Tier II |
|---|---|---|
| No | | |

## SEEM Disaggregation - Analog/Benchmark

| SEEM Disaggregation | SEEM Analog/Benchmark |
|---|---|
| • Not Applicable | Not Applicable |

# CM-9: Number of Defects in Production Releases (Type 6 CR)

## Definition

Measures the number of defects in Production Releases. This measure will be presented as the number of Type 6 Severity 1 defects, the number of Type 6 Severity 2 defects without a mechanized work around, and the number of Type 6 Severity 3 defects resulting within a three week period from a Production Release date. The definition of Type 6 Change Requests (CR) and Severity 1, Severity 2, and Severity 3 defects can be found in the Change Control Process Document.

## Exclusions

None

## Business Rules

This metric measures the number of Type 6 Severity 1 defects, the number of Type 6 Severity 2 defects without a mechanized work around, and the number of Type 6 Severity 3 defects resulting within a three week period from a Production Release date. The definitions of Type 6 Change Requests (CR) and Severity 1, 2, and 3 defects can be found in the Change Control Process, which can be found at http://www.interconnection.bellsouth.com/markets/lec/ccp_live/index.html.

## Calculation

The number of Type 6 Severity 1 Defects, the number of Type 6 Severity 2 Defects without a mechanized work around, and the number of Type 6 Severity 3 defects.

## Report Structure

- Production Releases
- Number of Type 6 Severity 1 defects
- Number of Type 6 Severity 2 defects without a mechanized work around
- Number of Type 6 Severity 3 defects

## Data Retained

- Region
- Report Period
- Production Releases
- Number of Type 6 Severity 1 defects
- Number of Type 6 Severity 2 defects without a mechanized work around
- Number of Type 6 Severity 3 defects

## SQM Level of Disaggregation - Analog/Benchmark

| SQM Level of Disaggregation | SQM Analog/Benchmark |
|---|---|
| Region—Number of Type 6 Severity 1 Defects | 0 Defects |
| Region—Number of Type 6 Severity 2 Defects | 0 Defects without a mechanized work around |
| Region—Number of Type 6 Severity 3 Defects | 0 Defects |

## SEEM Measure

| SEEM | Tier I | Tier II |
|---|---|---|
| No | | |

**SEEM Disaggregation** **SEEM Analog/Benchmark**

- Not Applicable ..... Not Applicable

# CM-10: Software Validation

## Definition

Measures software validation test results for Production Releases of BellSouth Local Interfaces.

## Exclusions

None

## Business Rules

BellSouth maintains a test deck of transactions that are used to validate that functionality in software Production Releases work as designed. Each transaction in the test deck is assigned a weight factor, which is based on the weights that have been assigned to the metrics. Within the software validation metric weight factors will be allocated among transaction types (e.g., Pre-Order, Order Resale, Order UNE, Order UNE-P) and then equally distributed across transactions within the specific type.

BellSouth will begin to execute the software validation test deck within one (1) business day following a Production Release. Test deck transactions will be executed using Production Release software in the CAVE environment. Within seven (7) business days following completion of the Production Release software validation test in CAVE, BellSouth will report the number of test deck transactions that failed. Each failed transaction will be multiplied by the transaction's weight factor.

A transaction is considered failed if the request cannot be submitted or processed, or results in incorrect or improperly formatted data.

The test deck scenario weight table can be found in the Change Control Process, a copy of which can be found at http://www.interconnection.bellsouth.com/markets/lec/ccp_live/index.html.

## Calculation

This software validation metric is defined as the ratio of the sum of the weights of failed transactions using Production Release software in CAVE to the sum of the weights of all transactions in the test deck.

- Numerator = Sum of weights of failed transactions
- Denominator = Sum of weights of all transactions in the test deck

## Report Structure

- BellSouth Aggregate

## Data Retained

- Report Period
- Production Release Number
- Test Deck Weights
- % Test Deck Weight Failure

## SQM Level of Disaggregation - Analog/Benchmark

| SQM Level of Disaggregation | SQM Analog/Benchmark |
|---|---|
| • Region | <= 5% |

## SEEM Measure

| SEEM | Tier I | Tier II |
|---|---|---|
| No | | |

| SEEM Disaggregation | SEEM Analog/Benchmark |
|---|---|
| • Not Applicable | Not Applicable |

# CM-11: Percent of Change Requests Implemented within 60 Weeks of Prioritization

## Definition

Measures whether BellSouth provides CLECs timely implementation of prioritized change requests.

## Exclusions

- Change requests that are implemented later than 60 weeks with the consent of the CLECs
- Change requests for which BellSouth has regulatory authority to exceed the interval

## Business Rules

This metric is designed to measure BellSouth's monthly performance in implementing prioritized change requests. The clock starts when a change request has first been prioritized as described in the Change Control Process. The clock stops when the change request has been implemented by BellSouth and made available to the CLECs. BellSouth will begin reporting this monthly measure with the next release for diagnostic purposes, and will be measured for SEEM purposes 60 weeks from first prioritization meeting following Commission approval of this measure.

## Calculation

**Percent of Type 5 CLEC initiated Change Requests implemented on time** = (a / b) X 100

- a = Total number of prioritized Type 5 Change Requests implemented each month that are less than or equal to 60 weeks of age from the date of their first prioritization plus all other prioritized change requests existing at the end of the month that are less than or equal to 60 weeks of age from prioritization.

- b = All entries in "a" above plus all Type 5 Change Requests prioritized more than 60 weeks before the end of the monthly reporting period.

**Percent of Type 4 BellSouth initiated Change Requests implemented on time** = (a / b) X 100

- a = Total number of prioritized Type 4 Change Requests implemented each month that are less than or equal to 60 weeks of age from the date of the release prioritization list plus all other Type 4 prioritized change requests existing at the end of the month that are less than or equal to 60 weeks of age from prioritization.

- b = All entries in "a" above plus all Type 4 Change Requests prioritized more than 60 weeks before the end of the monthly reporting period.

## Report Structure

- BellSouth Aggregate
- Type 4 requests implemented
- Type 5 requests implemented
- % implemented within 16, 32, 48, and 60 weeks

## Data Retained

- Region
- Report Month
- Total implemented by type
- Total implemented within 60 weeks

## SQM Level of Disaggregation - Analog/Benchmark

| SQM Level of Disaggregation | SQM Analog/Benchmark |
|---|---|
| • Region | 95% within interval |
| • Type 4 requests implemented | 95% within interval |
| • Type 5 requests implemented | 95% within interval |

## SEEM Measure

| SEEM | Tier I | Tier II | Tier III |
|---|---|---|---|
| Yes | | X | |

| SEEM Disaggregation | SEEM Analog/Benchmark |
|---|---|
| • Region | 95% within interval |

# Appendix A: Reporting Scope

## A-1: Standard Service Groupings

See individual reports in the body of the SQM.

## A-2: Standard Service Order Activities

These are the generic BellSouth/CLEC service order activities which are included in the Pre-Ordering, Ordering, and Provisioning sections of this document. It is not meant to indicate specific reporting categories.

### Service Order Activity Types

- Service Migrations Without Changes
- Service Migrations With Changes
- Move and Change Activities
- Service Disconnects (Unless noted otherwise)
- New Service Installations

### Pre-Ordering Query Types

- Address
- Telephone Number
- Appointment Scheduling
- Customer Service Record
- Feature Availability
- Service Inquiry

### Maintenance Query Types

TAFI - TAFI queries the systems below

- CRIS
- March
- Predictor
- LMOS
  - DLR
  - DLETH
  - LMOSupd
- LNP
- NIW
- OSPCM
- SOCS

### Report Levels

- CLEC RESH
- CLEC State
- CLEC Region
- Aggregate CLEC State
- Aggregate CLEC Region
- BellSouth State
- BellSouth Region

# Appendix B: Glossary of Acronyms and Terms

## Symbols used in calculations

Σ
A mathematical symbol representing the sum of a series of values following the symbol.

-
A mathematical operator representing subtraction.

+
A mathematical operator representing addition.

/
A mathematical operator representing division.

<
A mathematical symbol that indicates the metric on the left of the symbol is less than the metric on the right.

<=
A mathematical symbol that indicates the metric on the left of the symbol is less than or equal to the metric on the right.

>
A mathematical symbol that indicates the metric on the left of the symbol is greater than the metric on the right.

>=
A mathematical symbol that indicates the metric on the left of the symbol is greater than or equal to the metric on the right.

**( )**
Parentheses, used to group mathematical operations which are completed before operations outside the parentheses.

## A

**ACD**
Automatic Call Distributor - A service that provides status monitoring of agents in a call center and routes high volume incoming telephone calls to available agents while collecting management information on both callers and attendants.

**Aggregate**
Sum total of all items in like category, e.g. CLEC aggregate equals the sum total of all CLECs' data for a given reporting level.

**ALEC**
Alternative Local Exchange Company = FL CLEC

**ADSL**
Asymmetrical Digital Subscriber Line

**ASR**
Access Service Request - A request for access service terminating delivery of carrier traffic into a Local Exchange Carrier's network.

**ATLAS**

Application for Telephone Number Load Administration System - The BellSouth Operations System used to administer the pool of available telephone numbers and to reserve selected numbers from the pool for use on pending service requests/service orders.

**ATLASTN**
ATLAS software contract for Telephone Number.

**Auto Clarification**
The number of LSRs that were electronically rejected from LESOG and electronically returned to the CLEC for correction.

## B

**BFR:**
Bona Fied Request

**BILLING**
The process and functions by which billing data is collected and by which account information is processed in order to render accurate and timely billing.

**BOCRIS**
Business Office Customer Record Information System (Front-end to the CRIS database.)

**BRI**
Basic Rate ISDN

**BRC**
Business Repair Center – The BellSouth Business Systems trouble receipt center which serves large business and CLEC customers.

**BellSouth**
BellSouth Telecommunications, Inc.

## C

**CABS**
Carrier Access Billing System

**CCC**
Coordinated Customer Conversions

**CCP**
Change Control Process

**Centrex**
A business telephone service, offered by local exchange carriers, which is similar to a Private Branch Exchange (PBX) but the switching equipment is located in the telephone company Central Office (CO).

**CKTID**
A unique identifier for elements combined in a service configuration

**CLEC**
Competitive Local Exchange Carrier

**CLP**
Competitive Local Provider = NC CLEC

**CM**
Change Management

**CMDS**
Centralized Message Distribution System - Telcordia administered national system used to transfer specially formatted messages among companies.

**COFFI**
Central Office Feature File Interface - Provides information about USOCs and class of service. COFFI is a part of DOE/SONGS. It indicates all services available to a customer.

**CRIS**
Customer Record Information System - This system is used to retain customer information and render bills for telecommunications service.

**CRSACCTS**
CRIS software contract for CSR information

**CRSG**
Complex Resale Support Group

**C-SOTS**
CLEC Service Order Tracking System

**CSR**
Customer Service Record

**CTTG**
Common Transport Trunk Group - Final trunk groups between BellSouth & Independent end offices and the BellSouth access tandems.

## D

**DA**
Directory Assistance

**DESIGN**
Design Service is defined as any Special or Plain Old Telephone Service Order which requires BellSouth Design Engineering Activities.

**DISPOSITION & CAUSE**
Types of trouble conditions, e.g. No Trouble Found, Central Office Equipment, Customer Premises Equipment, etc.

**DLETH**
Display Lengthy Trouble History - A history report that gives all activity on a line record for trouble reports in LMOS.

**DLR**
Detail Line Record - A report that gives detailed line record information on records maintained in LMOS

**DS-0**
The worldwide standard speed for one digital voice signal (64000 bps).

**DS-1**
24 DS-0s (1.544Mb/sec., i.e. carrier systems)

**DOE**
Direct Order Entry System - An internal BellSouth service order entry system used by BellSouth Service Representatives to input business service orders in BellSouth format.

**DSAP**
DOE (Direct Order Entry) Support Application - The BellSouth Operations System which assists a Service Representative or similar carrier agent in negotiating service provisioning commitments for non-designed services and Unbundled Network Elements.

**DSAPDDI**
DSAP software contract for schedule information.

**DSL**
Digital Subscriber Line

**DUI**
Database Update Information

## E

**E911**
Provides callers access to the applicable emergency services bureau by dialing a 3-digit universal telephone number.

**EDI**
Electronic Data Interchange - The computer-to-computer exchange of inter and/or intra-company business documents in a public standard format.

**ESSX**
BellSouth Centrex Service

## F G

**Fatal Reject**
The number of LSRs that were electronically rejected from LEO, which checks to see of the LSR has all the required fields correctly populated.

**Flow-Through**
In the context of this document, LSRs submitted electronically via the CLEC mechanized ordering process that flow through to the BellSouth OSS without manual or human intervention.

**FOC**
Firm Order Confirmation - A notification returned to the CLEC confirming that the LSR has been received and accepted, including the specified commitment date.

**FX**
Foreign Exchange

## H

**HAL**
“Hands Off” Assignment Logic - Front end access and error resolution logic used in interfacing BellSouth Operations Systems such as ATLAS, BOCRIS, LMOS, PSIMS, RSAG and SOCS.

**HALCRIS**
HAL software contract for CSR information

**HDSL**
High Density Subscriber Loop/Line

## I J K

**ILEC**
Incumbent Local Exchange Company

**INP**
Interim Number Portability

**ISDN**
Integrated Services Digital Network

**IPC**
Interconnection Purchasing Center

## L

**LAN**
Local Area Network

**LAUTO**
The automatic processor in the LNP Gateway that validates LSRs and issues service orders.

**LCSC**
Local Carrier Service Center - The BellSouth center which is dedicated to handling CLEC LSRs, ASRs, and Preordering transactions along with associated expedite requests and escalations.

**Legacy System**
Term used to refer to BellSouth Operations Support Systems (see OSS)

**LENS**
Local Exchange Negotiation System - The BellSouth LAN/web server/OS application developed to provide both preordering and ordering electronic interface functions for CLECs.

**LEO**
Local Exchange Ordering - A BellSouth system which accepts the output of EDI, applies edit and formatting checks, and reformats the Local Service Requests in BellSouth Service Order format.

**LERG**
Local Exchange Routing Guide

**LESOG**
Local Exchange Service Order Generator - A BellSouth system which accepts the service order output of LEO and enters the Service Order into the Service Order Control System using terminal emulation technology.

**LFACS**
Loop Facilities Assessment and Control System

**LIDB**
Line Information Database

**LMOS**
Loop Maintenance Operations System - A system that provides a mechanized means of maintaining customer line records and for entering, processing, and tracking trouble reports.

**LMOS HOST**

LMOS host computer

**LMOSupd**
LMOS update allows trouble tickets on line records to be entered into LMOS.

**LMU**
Loop Make-up

**LMUS**
Loop Make-up Service Inquiry

**LNP**
Local Number Portability - In the context of this document, the capability for a subscriber to retain his current telephone number as he transfers to a different local service provider.

**LNP Gateway**
Local Number Portability (gateway)- A system that provides both internal and external communications with various interfaces and process including:

(1). Linking BellSouth to the Number Portability Administration Center (NPAC).

(2). Allowing for inter-company communications between BellSouth and the CLECs for electronic ordering.

(3). Providing interface between NPAC and AIN SMS for LNP routing processes.

**LOOPS**
Transmission paths from the central office to the customer premises.

**LRN**
Location Routing Number

**LSR**
Local Service Request – A request for local resale service or unbundled network elements from a CLEC.

## M

**Maintenance & Repair**
The process and function by which trouble reports are passed to BellSouth and by which the related service problems are resolved.

**MARCH**
A memory administration system that translates line-related service order data into switch provisioning messages and automatically transmits the messages to targeted stored program control system switches.

## N

**NBR**
New Business Request

**NC**
"No Circuits" - All circuits busy announcement.

**NIW**
Network Information Warehouse - A system that stores central office blockage data for use in processing trouble reports.

**NMLI**
Native Mode LAN Interconnection

**NPA**
Numbering Plan Area

**NXX**
The "exchange" portion of a telephone number.

## O

**OASIS**
Obtain Availability Services Information System - A BellSouth front-end processor, which acts as an interface between COFFI and RNS. This system takes the USOCs in COFFI and translates them to English for display in RNS.

**OASISBSN**
OASIS software contract for feature/service

**OASISNET**
OASIS software contract for feature/service

**OASISOCP**
OASIS software contract for feature/service

**ORDERING**
The process and functions by which resale services or unbundled network elements are ordered from BellSouth as well as the process by which an LSR or ASR is placed with BellSouth.

**Order Types**
The following order types are used in this document:

(1). T - The "to" portion of a change of address. This Order Type is used to connect main service at a new address when a customer moves from one address to another in any of the nine states within the BellSouth region. A "T" Order Type is always pared with an "F" Order Type which will have the same telephone number following the "F" Order Type Code unless the orders are within different states.

(2). N - Orders establishing a new account. Also, this Order Type Code is occasionally used when changing from one type of system to another such as when changing from PBX to Centrex.

(3). C - Order Type used for the following conditions: changes or partial connections or disconnections of service or equipment; change of telephone number, grade or class of main line, additional lines, auxiliary lines, PBX trunks and stations; addition of trunks or lines to existing accounts; move of equipment (other than change of address); temporary suspension and restoration of service at customer's request.

(4). R - Order Type used for the following conditions: additions, removals or changes in directory listings; responsibility change orders, addition, removal or changes in directory and billing information; other record corrections where no "field work" is involved.

**OSPCM**
Outside Plant Contract Management System - A system that provides scheduling and completion information on outside plant construction activities.

**OSS**
Operations Support System - A support system or database which is used to mechanize the flow or performance of work. The term is used to refer to the overall system consisting of hardware complex, computer operating system(s), and

application which is used to provide the support functions.

**OUT OF SERVICE**
Customer has no dial tone and cannot call out.

## P Q

**PMAP**
Performance Measurement Analysis Platform

**PON**
Purchase Order Number

**POTS**
Plain Old Telephone Service

**PREDICTOR**
A system which is used to administer proactive maintenance and rehabilitation activities on outside plant facilities, provide access to selected work groups to Mechanized Loop Testing and switching system I/O ports.

**Preordering**
The process and functions by which vital information is obtained, verified, or validated prior to placing a service request.

**PRI**
Primary Rate ISDN

**Provisioning**
The process and functions by which necessary work is performed to activate a service requested via an LSR or ASR and to initiate the proper billing and accounting functions.

**PSIMS**
Product/Service Inventory Management System - A BellSouth database Operations System which contains availability information on switching system features and capabilities and on BellSouth service availability. This database is used to verify the availability of a feature or service in an NXX prior to making a commitment to the customer.

**PSIMSORB**
PSIMS software contract for feature/service.

## R

**RNS**
Regional Negotiation System - An internal BellSouth service order entry system used by BellSouth Consumer Services to input service orders in BellSouth format.

**ROS**
Regional Ordering System

**RRC**
Residence Repair Center - The BellSouth Consumer Services trouble receipt center which serves residential customers.

**RSAG**
Regional Street Address Guide - The BellSouth database, which contains street addresses validated to be accurate with state and local governments.

**RSAGADDR**
RSAG software contract for address search.

**RSAGTN**
RSAG software contract for telephone number search.

## S

**SAC**
Service Advocacy Center

**SEEM**
Self Effectuating Enforcement Mechanism

**SOCS**
Service Order Control System - A system which routes service order images among BellSouth drop points and BellSouth OSS during the service provisioning process.

**SOIR**
Service Order Interface Record - any change effecting activity to a customer account by service order that impacts 911/E911

**SONGS**
Service Order Negotiation and Generation System.

**Syntactically Incorrect Query**
A query that cannot be fulfilled due to insufficient or incorrect input data from the end user. For example, A CLEC would like to query the legacy system for the following address: 1234 Main ST. Entering "1234 Main ST" will be considered syntactically correct because valid characters were used in the address field. However, entering "AB34 Main ST" will be considered syntactically incorrect because invalid characters (i.e., alpha characters were entered in numeric slots) were used in the address field.

## T

**TAFI**
Trouble Analysis Facilitation Interface - The BellSouth Operations System that supports trouble receipt center personnel in taking and handling customer trouble reports.

**TAG**
Telecommunications Access Gateway – TAG was designed to provide an electronic interface, or machine-to-machine interface for the bi-directional flow of information between BellSouth's OSSs and participating CLECs.

**TN**
Telephone Number

**Total Manual Fallout**
The number of LSRs which are entered electronically but require manual entering into a service order generator.

## U V

**UNE**
Unbundled Network Element

**UCL**
Unbundled Copper Link

**USOC**
Universal Service Order Code

## W X Y Z

**WATS**
Wide Area Telephone Service

**WFA**
Work Force Administration

**WMC**
Work Management Center

**WTN**
Working Telephone Number.

# Appendix C: BellSouth Audit Policy

## C-1: BellSouth's Internal Audit Policy

BellSouth's internal efforts to make certain that the reports produced by the PMAP platform are of the highest accuracy has been formalized into a Performance Measurements Quality Assurance Plan (PMQAP) that documents and augments existing quality assurance processes integral to the production and validation of Performance Measurements data.

The plan consists of three sections:

1. Change Control addresses the quality assurance steps involved in the introduction of new measurements and changes to existing measurements.
2. Production addresses the quality assurance steps used to create monthly SQM reports.
3. Monthly Validation addresses the quality assurance steps used to ensure accurate posting of monthly results.

The BellSouth PMQAP will ensure that BellSouth effectively and consistently provides accurate performance measurements data for the activities included in the SQM. The BellSouth Internal Audit department will audit this plan and its quality assurance steps annually, beginning in 4Q01.

## C-2: BellSouth's External Audit Policy

BellSouth currently provides many CLECs with audit rights as a part of their individual interconnection agreements. BellSouth has developed a proposed Audit Plan for use by the parties to an audit. If requested by a Public Service Commission or by a CLEC exercising contractual audit rights, BellSouth will agree to undergo a comprehensive audit of the current year aggregate level reports for both BellSouth and the CLECs for each of the next five (5) years (2001 - 2005), to be conducted by an independent third party auditor jointly selected by BellSouth and the CLEC. The results of audits will be made available to all the parties subject to proper safeguards to protect proprietary information. Requested audits include the following specifications:

1. The cost shall be borne by BellSouth.
2. The independent third party auditor shall be selected with input from BellSouth, the PSC, if applicable, and the CLEC(s).
3. BellSouth, the PSC and the CLECs shall jointly determine the scope of the audit.

These comprehensive audits are intended to provide the basis for the PSCs and CLECs to determine that the SQM, PMAP and SEEM produce accurate data that reflects each States Order for performance measurements. Once this has been verified by an initial audit, the BellSouth PMQAP will provide the basis for future audits.

# Appendix D: OSS Tables

## OSS-1: Average Response Interval and Percent Within Interval (Pre-Ordering/Ordering)

**Table 1: Legacy System Access Times For RNS**

| System | Contract | Data | < 2.3 sec. | > 6 sec. | <= 6.3 sec. | Avg. Sec. | # of Calls |
|---|---|---|---|---|---|---|---|
| RSAG | RSAG-TN | Address | x | x | x | x | x |
| RSAG | RSAG-ADDR | Address | x | x | x | x | x |
| ATLAS | ATLAS-TN | TN | x | x | x | x | x |
| DSAP | DSAP-DDI | Schedule | x | x | x | x | x |
| CRIS | CRSACCTS | CSR | x | x | x | x | x |
| OASIS | OASISBIG | Feature/Service | x | x | x | x | x |

**Table 2: Legacy System Access Times For R0S**

| System | Contract | Data | < 2.3 sec. | > 6 sec. | <= 6.3 sec. | Avg. sec. | # of Calls |
|---|---|---|---|---|---|---|---|
| RSAG | RSAG-TN | Address | x | x | x | x | x |
| RSAG | RSAG-ADDR | Address | x | x | x | x | x |
| ATLAS | ATLAS-TN | TN | x | x | x | x | x |
| DSAP | DSAP-DDI | Schedule | x | x | x | x | x |
| CRIS | CRSOCSR | CSR | x | x | x | x | x |
| OASIS | OASISBIG | Feature/Service | x | x | x | x | x |

**Table 3: Legacy System Access Times For LENS**

| System | Contract | Data | < 2.3 sec. | > 6 sec. | <= 6.3 sec. | Avg. sec. | # of Calls |
|---|---|---|---|---|---|---|---|
| RSAG | RSAG-TN | Address | x | x | x | x | x |
| RSAG | RSAG-ADDR | Address | x | x | x | x | x |
| ATLAS | ATLAS-TN | TN | x | x | x | x | x |
| DSAP | DSAP | Schedule | x | x | x | x | x |
| CRIS | CRSECSRL | CSR | x | x | x | x | x |
| COFFI | COFFI/USOC | Feature/Service | x | x | x | x | x |
| P/SIMS | PSIMS/ORB | Feature/Service | x | x | x | x | x |

**Table 4: Legacy System Access Times For TAG**

| System | Contract | Data | < 2.3 sec. | > 6 sec. | <= 6.3 sec. | Avg. sec. | # of Calls |
|---|---|---|---|---|---|---|---|
| RSAG | RSAG-TN | Address | x | x | x | x | x |
| RSAG | RSAG-ADDR | Address | x | x | x | x | x |
| ATLAS | ATLAS-TN | TN | x | x | x | x | x |
| ATLAS | ATLAS-MLH | TN | x | x | x | x | x |
| ATLAS | ATLAS-DID | TN | x | x | x | x | x |
| DSAP | DSAP-DDI | Schedule | x | x | x | x | x |
| CRIS | TAG-CSR | CSR | x | x | x | x | x |
| P/SIMS | PSIM/ORB | Feature/Service | x | x | x | x | x |

# OSS-1: Average Response Interval and Percent Within Interval (Pre-Ordering/Ordering)

## SEEM OSS Legacy System

| System | BellSouth | CLEC |
|---|---|---|
| **Telephone Number/Address** | | |
| RSAG-ADDR | RNS, ROS | TAG, LENS |
| RSAG-TN | RNS, ROS | TAG, LENS |
| Atlas | RNS,ROS | TAG. LENS |
| **Appointment Scheduling** | | |
| DSAP | RNS, ROS | TAG, LENS |
| **CSR Data** | | |
| CRSACCTS | RNS | |
| CRSOCSR | ROS | |
| CRSECSRL | | LENS |
| TAG-CSR | | TAG |
| **Service/Feature Availability** | | |
| OASISBIG | RNS, ROS | |
| PSIMS/ORB, COFFI | | LENS, TAG |

# OSS-2: OSS Availability (Pre-Ordering/Ordering)

## OSS Availability

| OSS Interface | Applicable to | % Availability |
|---|---|---|
| EDI | CLEC | x |
| LENS | CLEC | x |
| LEO | CLEC | x |
| LESOG | CLEC | x |
| PSIMS | CLEC | x |
| TAG | CLEC | x |
| LNP Gateway | CLEC | x |
| COG | CLEC | x |
| SOG | CLEC | x |

| | | |
|---|---|---|
| DOM | CLEC | x |
| DOE | CLEC/BellSouth | x |
| CRIS | CLEC/BellSouth | x |
| ATLAS/COFFI | CLEC/BellSouth | x |
| BOCRIS | CLEC/BellSouth | x |
| DSAP | CLEC/BellSouth | x |
| RSAG | CLEC/BellSouth | x |
| SOCS | CLEC/BellSouth | x |
| SONGS | CLEC/BellSouth | x |
| RNS | BellSouth | x |
| ROS | BellSouth | x |

# OSS-2: OSS Availability (Pre-Ordering/Ordering)

## SEEM OSS Availability

| OSS Interface | Applicable to | % Availability |
|---|---|---|
| EDI | CLEC | x |
| LENS | CLEC | x |
| LEO | CLEC | x |
| LESOG | CLEC | x |
| PSIMS | CLEC | x |
| TAG | CLEC | x |
| LNP Gateway | CLEC | x |
| COG | CLEC | x |
| SOG | CLEC | x |
| DOM | CLEC | x |

# OSS-3: OSS Availability (Maintenance & Repair)

## OSS Availability (M&R)

| OSS Interface | % Availability |
|---|---|
| BellSouth TAFI | x |
| CLEC TAFI | x |
| CLEC ECTA | x |
| **BellSouth & CLEC** | |
| CRIS | x |
| LMOS HOST | x |
| LNP Gateway | x |
| MARCH | x |
| OSPCM | x |
| PREDICTOR | x |
| SOCS | x |

# OSS-3: OSS Availability (Maintenance & Repair)

## SEEM OSS Availability (M&R)

| OSS Interface | % Availability |
|---|---|
| CLEC TAFI | x |
| CLEC ECTA | x |

# OSS-4: Response Interval (Maintenance & Repair)

## Legacy System Access Times for M&R

| System | BellSouth & CLEC | Count <= 4 | > 4 <= 10 | <= 10 | > 10 | > 30 | Avg. Int. |
|---|---|---|---|---|---|---|---|
| CRIS | x | x | x | x | x | x | x |
| DLETH | x | x | x | x | x | x | x |
| DLR | x | x | x | x | x | x | x |
| LMOS | x | x | x | x | x | x | x |
| LMOSupd | x | x | x | x | x | x | x |
| LNP | x | x | x | x | x | x | x |
| MARCH | x | x | x | x | x | x | x |
| OSPCM | x | x | x | x | x | x | x |
| Predictor | x | x | x | x | x | x | x |
| SOCS | x | x | x | x | x | x | x |
| NIW | x | x | x | x | x | x | x |

**TAFI**

| System | Open Trouble Ticket | Status Trouble Ticket | Mechanized Line Testing | Close Trouble Ticket |
|---|---|---|---|---|
| CRIS | x | | | |
| DLETH | x | | | |
| DLR | x | | | |
| LMOS | x | x | | x |
| LMOSSupd | x | x | x | x |
| LNP | x | | | |
| MARCH | x | | | |
| OSPCM | x | x | | |
| Predictor | x | x | | |
| SOCS | x | x | | |
| NIW | x | | | |

Note: Depending on the type of customer report multiple systems maybe touched in one transaction.

| Product | PRODUCT TYPE | REQTYPE | ACT TYPE | F/T[3] | COMPLEX SERVICE | COMPLEX ORDER | PLANNED FALLOUT FOR MANUAL HANDLING[1] | EDI | TAG[2] | LENS[4] | COMMENTS |
|---|---|---|---|---|---|---|---|---|---|---|---|
| 2 wire analog DID trunk port | U | F | N | No | UNE | Yes | NA | N | N | N | |
| 2 wire analog port | U | F | N | No | UNE | No | Yes | Y | Y | Y | |
| 2 wire ISDN digital line | U | A | N,T | No | UNE | Yes | NA | N | N | N | |
| 2 wire ISDN digital loop | U | A | N,C,D | Yes | UNE | Yes | No | Y | Y | N | |
| 2 wire ISDN digital loop - LNP | U | B | V,P,Q | Yes | UNE | Yes | No | Y | Y | N | |
| 3 Way Calling | R,B | E,M | N,C,V,W,P,Q,T | Yes | No | No | No | Y | Y | Y | |
| 3rd Party Call Block | R,B | E,M | N,C,V,W,D,P,Q,T | Yes | No | No | No | Y | Y | Y | |
| 4 wire analog voice grade loop | U | A | T | No | UNE | Yes | Yes | Y | Y | N | |
| 4 wire analog voice grade loop | U | A | N | Yes | UNE | Yes | No | Y | Y | N | |
| 4 wire DS1 & PRI digital loop | U | A | N,T | No | UNE | Yes | NA | N | N | N | |
| 4 wire DSO & PRI digital loop | U | A | N,T | No | UNE | Yes | NA | N | N | N | |
| 4 wire ISDN DSI digital trunk ports | U | A | N,T | No | UNE | Yes | NA | N | N | N | |
| 4-WIRE DS1 LOOP WITH CHANNELIZATION WITH PORT DS1 | C | M | N,C,D,V | No | Yes | Yes | NA | N | N | N | |
| 4-WIRE DS1 LOOP WITH CHANNELIZATION WITH PORT TRUNK SERVICE | C | M | N,C,D,V | No | Yes | Yes | NA | N | N | N | |
| 900 Call Block | R,B | E,M | N,C,V,W,D,P,Q,T | Yes | No | No | No | Y | Y | Y | |
| Accupulse | C | E | N,C,T,V,W | No | Yes | Yes | NA | N | N | N | |
| ADSL | R,B,C | E | V,W,D | Yes | C/S | C/S | No | Y | Y | Y | NOTE THIS PRODUCT CAN BE ORDERED FOR RES/BUS AND CENTREX |
| Analog Data/Private Line | C | E | N,C,T,V,W,D | No | Yes | Yes | NA | N | N | N | |
| Area Plus | R,B | E,M | N,C,V,W,P,Q,T | Yes | No | No | No | Y | Y | Y | |
| ATM (ASYNCHRONOUS TRANFER MODE) | C | E | N,C,V,W,D | No | Yes | Yes | NA | N | N | N | |
| Basic Rate ISDN *Unbundled | U | A | T | No | Yes | Yes | Yes | Y | Y | N | |
| Basic Rate ISDN *Unbundled | U | A | N,V,D | Yes | UNE | Yes | No | Y | Y | Y | |
| Basic Rate ISDN *Unbundled | U | A | C,T | No | UNE | Yes | Yes | Y | Y | Y | |
| Basic Rate ISDN 2 Wire UNE P | C | M | N,C,D,V | No | Yes | Yes | NA | N | N | N | Manual |
| Basic Rate ISDN 2 Wire | C | E | N,C, D,T,V,P,Q | No | Yes | Yes | Yes | Y | Y | Y | |

| Product | PRODUCT TYPE | REQTYPE | ACT TYPE | F/T[3] | COMPLEX SERVICE | COMPLEX ORDER | PLANNED FALLOUT FOR MANUAL HANDLING[1] | EDI | TAG[2] | LENS[4] | COMMENTS |
|---|---|---|---|---|---|---|---|---|---|---|---|
| BELLSOUTH CHANNELIZED TRUNKS | C | E | N,C,D,T,V,W,P,Q | No | Yes | Yes | NA | N | N | N | |
| Call Block | R,B | E,M | N,C,V,W,P,Q,T | Yes | No | No | No | Y | Y | Y | |
| Call Forwarding | R,B | E,M | N,C,V,W,P,Q,T | Yes | No | No | No | Y | Y | Y | |
| Call Return | R,B | E,M | N,C,V,W,P,Q,T | Yes | No | No | No | Y | Y | Y | |
| Call Selector | R,B | E,M | N,C,V,W,P,Q,T | Yes | No | No | No | Y | Y | Y | |
| Call Tracing | R,B | E,M | N,C,V,W,P,Q,T | Yes | No | No | No | Y | Y | Y | |
| Call Waiting | R,B | E,M | N,C,V,W,P,Q,T | Yes | No | No | No | Y | Y | Y | |
| Call Waiting Deluxe | R,B | E,M | N,C,V,W,P,Q,T | Yes | No | No | No | Y | Y | Y | |
| Caller ID | R,B | E,M | N,C,V,W,P,Q,T | Yes | No | No | No | Y | Y | Y | |
| BELLSOUTH CENTREX* | C | P | N,C,D,W,T,S,B,L,V,P | No | Yes | Yes | NA | N | N | N | |
| UNE P CENTREX | C | M | N,C,D,V | No | Yes | Yes | NA | N | N | N | |
| Collect Call Block | R,B | E,M | N,C,V,W,D,P,Q,T | Yes | No | No | No | Y | Y | Y | |
| DID | C | N | N,C,D,V,W,T,P,Q | No | Yes | Yes | Yes | Y | Y | Y | |
| 2-WIRE DIRECT INWARD DIAL (DID) TRUNK PORT AND VOICE GRADE LOOP COMBINATION | C | M | N,C,D,V | No | Yes | Yes | NA | N | N | N | |
| Digital Data Transport | U | E | N,C,T,V,W | No | UNE | Yes | NA | N | N | N | |
| DIGITAL DIRECT INTEGRATION TERMINATION SERVICES (DDITS) DS1 | C | M | N,C,D,V | No | Yes | Yes | NA | N | N | N | |
| DIGITAL DIRECT INTEGRATION TERMINATION SERVICES (DDITS) TRUNK SERVICE | C | M | N,C,D,V | No | Yes | Yes | NA | N | N | N | |
| Directory Listing Indentions | B,U | B,C,E,F,J,M,N | N,C,T,R,V,W,P,Q | No | No | No | Yes | Y | Y | Y | |
| Directory Listings (simple) | R,B,U | B,C,E,F,J,M,N | N,C,R,V,W,P,Q | Yes | No | No | No | Y | Y | Y | |
| Directory Listings (simple) | R,B,U | B,C,E,F,J,M,N | T | No | No | No | Yes | Y | Y | N | |
| Directory Listings Captions | R,B,U | B,C,E,F,J,M,N | N,C,T,R,V,W,P,Q | No | No | Yes | Yes | Y | Y | Y | |
| DIFFERENT PREMISE ADDRESS (DPA) | C | E | N,C,D,V,W,T | No | Yes | Yes | NA | N | N | N | |
| DS1Loop | U | A | N,D,V | Yes | UNE | Yes | No | Y | Y | Y | |
| DS3 | U | A | N,C,V | No | UNE | Yes | NA | N | N | N | |
| DSO Loop | U | A | N,D,V | Yes | UNE | Yes | No | Y | Y | Y | |
| DSO Loop | U | A | C,T | No | No | No | Yes | Y | Y | Y | |
| Enhanced Caller ID | R,B | E | C,D,N,V,W,P,Q,T | Yes | No | No | No | Y | Y | Y | |

| Product | PRODUCT TYPE | REQTYPE | ACT TYPE | F/T[3] | COMPLEX SERVICE | COMPLEX ORDER | PLANNED FALLOUT FOR MANUAL HANDLING[1] | EDI | TAG[2] | LENS[4] | COMMENTS |
|---|---|---|---|---|---|---|---|---|---|---|---|
| Enhanced Extended Links (EELS) | U | A | C,D,N,T,V | Yes | No | No | No | Y | Y | Y | |
| ESSX | C | P | C,D,T,V,S,B,W,L,P,Q | No | Yes | Yes | NA | N | N | N | |
| Flat Rate/Business | B | E, M | C,D,N,V,W,T Y,B,L,S,D,T,P,Q | Yes | No | No | No | Y | Y | Y | |
| Flat Rate/Residence | R | E, M | C,D,N,V,W,T Y,B,L,S,D,T,P,Q | Yes | No | No | No | Y | Y | Y | |
| FLEXSERV | C | E | N,C,D,T,V,W,P,Q | No | Yes | Yes | NA | N | N | N | |
| Frame Relay | C | E | N,C,D,V,W | No | Yes | Yes | NA | N | N | N | |
| FX/FCO | C | E | N,C,D,T,V,W,P,Q | No | Yes | Yes | NA | N | N | N | |
| UNE P FX/FCO (RES,BUS,PBX) (NOTE: THIS PRODUCT WILL NOT BE AVAILABLE UNTIL 08--01-02 | C | M | N,C,V,D,T,S,B,L,W,Y,P,Q | No | Yes | Yes | NA | N | N | N | |
| Ga. Community Calling | R,B | M | C,D,N,V,W,P,Q | No | No | No | NA | N | N | N | |
| Ga. Community Calling | R,B | E | T | No | No | No | Yes | Y | Y | N | |
| HDSL | U | A | T | No | UNE | No | Yes | Y | Y | N | |
| HDSL | U | A | N,C,D,V | Yes | UNE | No | No | Y | Y | Y | |
| Hunting MLH | R,B | E, M | C,D,N,T,V,W | No | C/S[4] | C/S | Yes | Y | Y | N | |
| Hunting Series Completion | R,B | E, M | C,D,N,V,W | Yes | C/S | C/S | No | Y | Y | Y | |
| Hunting Series Completion | R,B | E, M | T | No | No | No | Yes | Y | Y | N | |
| INP to LNP Conversion | U | C | C | No | UNE | Yes | Yes | Y | Y | N | |
| LightGate | C | E | N,C,D,T,V,W,P,Q | No | Yes | Yes | NA | N | N | N | |
| Line Sharing | U | A | N,C,D,V,P,Q | Yes | UNE | No | No | Y | Y | Y | |
| Line Splitting | U | A | N,C,D | Yes | UNE | No | No | Y | Y | Y | |
| LNP With Complex Listing | U | C | P,V,Q | No | UNE | Yes | Yes | Y | Y | N | |
| LNP with Complex Services | U | C | P,V,Q | No | UNE | Yes | Yes | Y | Y | N | |
| LNP with Partial Migration | U | C | P,V,Q | No | UNE | Yes | Yes | Y | Y | N | |
| LNP | U | C | P,V,Q | Yes | UNE | Yes | No | Y | Y | N | |
| Local Number Portability (INP to LNP) | U | C | C | No | UNE | No | Yes | Y | Y | N | |
| INP | U | B,C | D | No | UNE | No | Yes | Y | Y | N | |
| Loop+LNP | U | B | V,P,Q | Yes | UNE | No | No | Y | Y | N | |
| Measured Rate/Bus | R,B | E,M | C,D,N,V,W,P,Q,T Y,B,L,S,D | Yes | No | No | No | Y | Y | Y | |

| Product | PRODUCT TYPE | REQTYPE | ACT TYPE | F/T[3] | COMPLEX SERVICE | COMPLEX ORDER | PLANNED FALLOUT FOR MANUAL HANDLING[1] | EDI | TAG[2] | LENS[4] | COMMENTS |
|---|---|---|---|---|---|---|---|---|---|---|---|
| Measured Rate/Res | R,B | E,M | C,D,N,V,W,P,Q,T Y,B,L,S,D | Yes | No | No | No | Y | Y | Y | |
| Megalink POINT TO POINT | C | E | N,V,W,T,D,C,P,Q | No | Yes | Yes | NA | N | N | N | |
| Megalink CHANNELIZED | C | E | N,V,W,T,D,C,P,Q | No | Yes | Yes | NA | N | N | N | |
| Memory Call | R,B | E, M | C,D,N,V,W,P,Q,T | Yes | No | No | No | Y | Y | Y | |
| Memory Call Ans. Svc. | R,B | E, M | C,D,N,V,W,P,Q,T | Yes | No | No | No | Y | Y | Y | |
| Multiserv | C | P | N,C,D,T,V,S,B,W,L,P,Q | No | Yes | Yes | NA | N | N | N | |
| Native Mode LAN Interconnection (NMLI) | C | E | N,C,D,V,W | No | Yes | Yes | NA | N | N | N | |
| Off-Prem Stations | C | E | N,C,D,V,W,T,P,Q | No | Yes | Yes | NA | N | N | N | |
| Optional Calling Plan | R,B | E, M | N,V,P,Q,W | Yes | No | No | No | Y | Y | Y | |
| Package/Complete Choice and Area Plus | R,B | E, M | N,C,V,W,P,Q | Yes | No | No | No | Y | Y | Y | |
| Package/Complete Choice and Area Plus | R,B | E, M | T | No | No | No | Yes | Y | Y | N | |
| Pathlink/ Primary Rate ISDN | C | E | N,C,D,T,V,W,P,Q | No | Yes | Yes | NA | N | N | N | |
| 4-WIRE ISDN PRI UNE COMBO | C | M | N,C,D,V | No | Yes | Yes | NA | N | N | N | |
| Pay Phone Provider | B | E,M | C,D,T,N,V,W,P,Q | Yes | No | No | No | Y | Y | Y | |
| PBX Standalone Port | C | F | N,C,D | No | Yes | Yes | Yes | Y | Y | N | |
| PBX Trunks | C | E | N,C,D,V,W,T,P,Q | No | Yes | Yes | Yes | Y | Y | N | |
| PIC/LPIC Change | R,B,C | E,M | C,V,P,Q,T | Yes | No | No | No | Y | Y | Y | |
| PIC/LPIC Freeze | R,B,C | E,M | N,C,V,P,Q,T | Yes | No | No | No | Y | Y | Y | |
| PORT/LOOP COMBO 2-WIRE PBX | C | M | N,C,D,V | No | No | No | Yes | Y | Y | N | |
| Port/Loop Simple | U | M | N,C,D,V | Yes | No | No | No | Y | Y | Y | |
| Preferred Call Forward | R,B,U | E,M | C,D,N,V,W,P,Q,T | Yes | No | No | No | Y | Y | Y | |
| RCF Basic | R,B | E,M | N,D,W,V,P,Q,T | No | No | No | Yes | Y | Y | N | |
| Remote Access to CF | R,B | E,M | C,D,N,V,W,P,Q,T | No | No | No | NA | Y | Y | N | |
| Repeat Dialing | R,B | E,M | C,D,N,V,W,P,Q,T | Yes | No | No | No | Y | Y | Y | |
| Ringmaster | R,B | E,M | C,D,N,V,W,P,Q,T | Yes | No | No | No | Y | Y | Y | |
| Smartpath | R,B | E | C,D,T,N,V,W | No | Yes | Yes | NA | N | N | N | |
| SmartRING | C | E | N,D,C,V,W | No | Yes | Yes | NA | N | N | N | |
| Speed Calling | R,B | E,M | C,D,N,V,W,P,Q,T | Yes | No | No | No | Y | Y | Y | |
| Synchronet | C | E | N,D,C,V,W | No | Yes | Yes | Yes | Y | Y | N | |
| Three Way Call Block | R,B | E,M | C,D,N,V,W,P,Q,T | Yes | No | No | No | Y | Y | N | |

| Product | PRODUCT TYPE | REQTYPE | ACT TYPE | F/T[3] | COMPLEX SERVICE | COMPLEX ORDER | PLANNED FALLOUT FOR MANUAL HANDLING[1] | EDI | TAG[2] | LENS[4] | COMMENTS |
|---|---|---|---|---|---|---|---|---|---|---|---|
| Tie Lines | C | E | N,C,D,V,W,T,P,Q | No | Yes | Yes | NA | N | N | N | |
| TOLL FREE DIALING (TFD) | C | E | N,C,D,V,W | No | Yes | Yes | NA | N | N | N | |
| Touchtone | R,B | E | C,D,N,V,W,P,Q,T | Yes | No | No | No | Y | Y | Y | |
| Unbundled Loop-Analog 2W, SL1, SL2 | U | A,B | D,N,V | Yes | UNE | No | No | Y | Y | Y | |
| Unbundled Loop-Analog 2W, SL1,SL2 | U | A,B | C ** | Yes | UNE | No | Yes | Y | Y | Y | |
| Unbundled Universal Digital Channel (UDC) Loop | U | A | N,D | Yes | UNE | No | No | Y | Y | Y | |
| WATS* | C | E | W,D,N,C,V | No | Yes | Yes | NA | N | N | N | |
| XDSL | U | A,B | N,C,V,D | Yes | UNE | No | No | Y | Y | Y | |
| XDSL | U | A,B | T | No | No | No | Yes | Y | Y | N | |

**Product:** U-UNE; C-Complex; B-Business; R-Residence

**Reqtype:** A-Loop; B-Loop with LNP/INP; C-LNP/INP; E-Resale; F-Port; J-Directory Listing and Directory Assistance; M–UNE-P; N-DID Resale; P-Centrex Resale, ACT: N-New installation-; C-Change an existing account; D-Disconnection; T-Outside move of end user location; R-Record activity is for ordering administrative changes; V-Conversion of service to new LSP as specified; W-Conversion of service to new LSP "as is"; S-Suspend; B-Restore; Y-Deny; L-Seasonal Suspend; P-Partial Migration (initial); Q-Partial Migration (subsequent)

**Note 1:** Planned Fallout for Manual Handling denotes those services that are electronically submitted and are not intended to flow-through due to the complexity of the service.

**Note 2:** The TAG column includes thse LSRs submitted via Robo TAG.

**Note 3:** For all services that indicate 'No' for flow-through, the following reasons, in addition to complex services or complex order, also prompt manual handling: Expedites from CLECs, special pricing plans, partial migrations (although conversions-as-is flow through for issue 9 unless migrating the main TN and a new TN must be assigned ), class of service invalid in certain states with some TOS e.g. government, or cannot be changed when changing main TN on C activity, pnding order review required (Example: Any pending service order (PSO) not related to current PON, pending service order (PSO) with multiple service orders pending realted to current PON and SUP received), more than 25 business lines and more than 15 loops, CSR inaccuracies such as invalid or missing CSR data in CRIS, Directory listings with Indentions or Captions, , transfer of calls option for CLEC end user – new TN not yet posted to CRIS.

**Note 4:** Services with C/S in the Complex Service and/or the Complex Order columns can be either complex or simple.

**Note 5:** The following list of items will not FT:

LSRs with Project or RPON fields populated

**SL1 REQTYP A, ACT C, LNA N, C, or D

**SL2 REQTYP A, ACT C, LNA C

REQTYP B, C, ACT P when migrating main telephone number

REQTYP B, C ACT V with Complex

REQTYP E, M, N and P; ACT = V, LNA = V (LNP to Resale/UNE Switched Combinations)

# Attachment 9

# Performance Measurements

# PERFORMANCE MEASUREMENTS

Upon a particular Commission's issuance of an Order pertaining to Performance Measurements in a proceeding expressly applicable to all CLECs generally, BellSouth shall implement in that state such Performance Measurements as of the date specified by the Commission. Performance Measurements that have been Ordered in a particular state can currently be accessed via the internet at http://pmap.bellsouth.com.

The following Service Quality Measurements (SQM) plan as it presently exists and as it may be modified in the future, is being included as the performance measurements currently in place for the state of Tennessee. At such time that the TRA issues a subsequent Order pertaining to Performance Measurements, such Performance Measurements shall supersede the SQM contained in the Agreement.

# Attachment 10

# BellSouth Disaster Recovery Plan

**CONTENTS**

**PAGE**


| | | |
|---|---|---|
| 1.0 | Purpose | 2 |
| 2.0 | Single Point of Contact | 2 |
| 3.0 | Identifying the Problem | 2 |
| 3.1 | Site Control | 3 |
| 3.2 | Environmental Concerns | 4 |
| 4.0 | The Emergency Control Center (ECC) | 4 |
| 5.0 | Recovery Procedures | 5 |
| 5.1 | CLEC Outage | 5 |
| 5.2 | BellSouth Outage | 5 |
| 5.2.1 | Loss of Central Office | 6 |
| 5.2.2 | Loss of a Central Office with Serving Wire Center Functions | 6 |
| 5.2.3 | Loss of a Central Office with Tandem Functions | 6 |
| 5.2.4 | Loss of a Facility Hub | 7 |
| 5.3 | Combined Outage (CLEC and BellSouth Equipment) | 7 |
| 6.0 | T1 Identification Procedures | 7 |
| 7.0 | Acronyms | 8 |

## 1.0 PURPOSE

In the unlikely event of a disaster occurring that affects BellSouth's long-term ability to deliver traffic to a Competitive Local Exchange Carrier (CLEC), general procedures have been developed by BellSouth to hasten the recovery process in accordance with the Telecommunications Service Priority (TSP) Program established by the Federal Communications Commission to identify and prioritize telecommunication services that support national security or emergency preparedness (NS/EP) missions. A description of the TSP Program as it may be amended from time to time is available at the following website: http://interconnection.bellsouth.com/products/vertical/tsp.html. Since each location is different and could be affected by an assortment of potential problems, a detailed recovery plan is impractical. However, in the process of reviewing recovery activities for specific locations, some basic procedures emerge that appear to be common in most cases.

These general procedures should apply to any disaster that affects the delivery of traffic for an extended time period. Each CLEC will be given the same consideration during an outage, and service will be restored as quickly as possible.

This document will cover the basic recovery procedures that would apply to every CLEC.

## 2.0 SINGLE POINT OF CONTACT

When a problem is experienced, regardless of the severity, the BellSouth Network Management Center (NMC) will observe traffic anomalies and begin monitoring the situation. Controls will be appropriately applied to insure the sanity of BellSouth's network; and, in the event that a switch or facility node is lost, the NMC will attempt to circumvent the failure using available reroutes.

BellSouth's NMC will remain in control of the restoration efforts until the problem has been identified as being a long-term outage. At that time, the NMC will contact BellSouth's Emergency Control Center (ECC) and relinquish control of the recovery efforts. Even though the ECC may take charge of the situation, the NMC will continue to monitor the circumstances and restore traffic as soon as damaged network elements are revitalized.

**The telephone number for the BellSouth Network Management Center in Atlanta, as published in Telcordia's National Network Management Directory, is 404-321-2516.**

## 3.0 IDENTIFYING THE PROBLEM

During the early stages of problem detection, the NMC will be able to tell which CLECs are affected by the catastrophe. Further analysis and/or first hand observation will determine if the disaster has affected CLEC equipment only, BellSouth equipment only or a combination. The initial restoration activity will be largely determined by the equipment that is affected.

Once the nature of the disaster is determined and after verifying the cause of the problem, the NMC will initiate reroutes and/or transfers that are jointly agreed upon by the affected CLECs' Network Management Center and the BellSouth NMC. The type and percentage of controls used will depend upon available network capacity. Controls necessary to stabilize the situation will be invoked and the NMC will attempt to re-establish as much traffic as possible.

For long-term outages, recovery efforts will be coordinated by the Emergency Control Center (ECC). Traffic controls will continue to be applied by the NMC until facilities are re-established. As equipment is made available for service, the ECC will instruct the NMC to begin removing the controls and allow traffic to resume.

## 3.1 SITE CONTROL

In the total loss of building use scenario, what likely exists will be a smoking pile of rubble. This rubble will contain many components that could be dangerous. It could also contain any personnel on the premises at the time of the disaster. For these reasons, the local fire marshal with the assistance of the police will control the site until the building is no longer a threat to surrounding properties and the companies have secured the site from the general public.

During this time, the majority owner of the building should be arranging for a demolition contractor to mobilize to the site with the primary objective of reaching the cable entrance facility for a damage assessment. The results of this assessment would then dictate immediate plans for restoration, both short term and permanent.

In a less catastrophic event, i.e., the building is still standing and the cable entrance facility is usable, the situation is more complex. The site will initially be controlled by local authorities until the threat to adjacent property has diminished. Once the site is returned to the control of the companies, the following events should occur.

An initial assessment of the main building infrastructure systems (mechanical, electrical, fire and life safety, elevators, and others) will establish building needs. Once these needs are determined, the majority owner should lead the building restoration efforts. There may be situations where the site will not be totally restored within the confines of the building. The companies must individually determine their needs and jointly assess the cost of permanent restoration to determine the overall plan of action.

Multiple restoration trailers from each company will result in the need for designated space and installation order. This layout and control is required to maximize the amount of restoration equipment that can be placed at the site, and the priority of placements.

Care must be taken in this planning to ensure other restoration efforts have logistical access to the building. Major components of telephone and building equipment will need to be removed and replaced. A priority for this equipment must also be jointly established to facilitate overall site restoration. (Example: If the AC switchgear has sustained damage, this would be of the highest priority in order to regain power, lighting, and HVAC throughout the building.)

If the site will not accommodate the required restoration equipment, the companies would then need to quickly arrange with local authorities for street closures, rights of way or other possible options available.

## 3.2 ENVIRONMENTAL CONCERNS

In the worse case scenario, many environmental concerns must be addressed. Along with the police and fire marshal, the state environmental protection department will be on site to monitor the situation.

Items to be concerned with in a large central office building could include:

1. Emergency engine fuel supply. Damage to the standby equipment and the fuel handling equipment could have created "spill" conditions that have to be handled within state and federal regulations.

2. Asbestos-containing materials that may be spread throughout the wreckage. Asbestos could be in many components of building, electrical, mechanical, outside plant distribution, and telephone systems.

3. Lead and acid. These materials could be present in potentially large quantities depending upon the extent of damage to the power room.

4. Mercury and other regulated compounds resident in telephone equipment.

5. Other compounds produced by the fire or heat.

Once a total loss event occurs at a large site, local authorities will control immediate clean up (water placed on the wreckage by the fire department) and site access.

At some point, the companies will become involved with local authorities in the overall planning associated with site clean up and restoration. Depending on the clean up approach taken, delays in the restoration of several hours to several days may occur.

In a less severe disaster, items listed above are more defined and can be addressed individually depending on the damage.

In each case, the majority owner should coordinate building and environmental restoration as well as maintain proper planning and site control.

## 4.0 THE EMERGENCY CONTROL CENTER (ECC)

The ECC is located in the Midtown 1 Building in Atlanta, Georgia. During an emergency, the ECC staff will convene a group of pre-selected experts to inventory the damage and initiate corrective actions. These experts have regional access to BellSouth's personnel and equipment and will assume control of the restoration activity anywhere in the nine-state area.

In the past, the ECC has been involved with restoration activities resulting from hurricanes, ice storms and floods. They have demonstrated their capabilities during these calamities as well as

during outages caused by human error or equipment failures. This group has an excellent record of restoring service as quickly as possible.

During a major disaster, the ECC may move emergency equipment to the affected location, direct recovery efforts of local personnel and coordinate service restoration activities with the CLECs. The ECC will attempt to restore service as quickly as possible using whatever means is available, leaving permanent solutions, such as the replacement of damaged buildings or equipment, for local personnel to administer.

Part of the ECC's responsibility, after temporary equipment is in place, is to support the NMC efforts to return service to the CLECs. Once service has been restored, the ECC will return control of the network to normal operational organizations. Any long-term changes required after service is restored will be made in an orderly fashion and will be conducted as normal activity.

## 5.0 RECOVERY PROCEDURES

The nature and severity of any disaster will influence the recovery procedures. One crucial factor in determining how BellSouth will proceed with restoration is whether or not BellSouth's equipment is incapacitated. Regardless of whose equipment is out of service, BellSouth will move as quickly as possible to aid with service recovery; however, the approach that will be taken may differ depending upon the location of the problem.

## 5.1 CLEC OUTAGE

For a problem limited to one CLEC (or a building with multiple CLECs), BellSouth has several options available for restoring service quickly. For those CLECs that have agreements with other CLECs, BellSouth can immediately start directing traffic to a provisional CLEC for completion. This alternative is dependent upon BellSouth having concurrence from the affected CLECs.

Whether or not the affected CLECs have requested a traffic transfer to another CLEC will not impact BellSouth's resolve to re-establish traffic to the original destination as quickly as possible.

## 5.2 BELLSOUTH OUTAGE

Because BellSouth's equipment has varying degrees of impact on the service provided to the CLECs, restoring service from damaged BellSouth equipment is different. The outage will probably impact a number of Carriers simultaneously. However, the ECC will be able to initiate immediate actions to correct the problem.

A disaster involving any of BellSouth's equipment locations could impact the CLECs, some more than others. A disaster at a Central Office (CO) would only impact the delivery of traffic to and from that one location, but the incident could affect many Carriers. If the Central Office is a Serving Wire Center (SWC), then traffic from the entire area to those Carriers served from that switch would also be impacted. If the switch functions as an Access Tandem, or there is a tandem in the building, traffic from every CO to every CLEC could be interrupted. A disaster that destroys a facility hub could disrupt various traffic flows, even though the switching equipment may be unaffected.

The NMC would be the first group to observe a problem involving BellSouth's equipment. Shortly after a disaster, the NMC will begin applying controls and finding re-routes for the

completion of as much traffic as possible. These reroutes may involve delivering traffic to alternate Carriers upon receiving approval from the CLECs involved. In some cases, changes in translations will be required. If the outage is caused by the destruction of equipment, then the ECC will assume control of the restoration.

### 5.2.1 Loss of a Central Office

When BellSouth loses a Central Office, the ECC will

a) Place specialists and emergency equipment on notice;

b) Inventory the damage to determine what equipment and/or functions are lost;

c) Move containerized emergency equipment and facility equipment to the stricken area, if necessary;

d) Begin reconnecting service on a parity basis for Hospitals, Police and other emergency agencies or End Users served by BellSouth or CLEC in accordance with the TSP priority restoration coding scheme entered in the BellSouth Maintenance database immediately prior to the emergency.

### 5.2.2 Loss of a Central Office with Serving Wire Center Functions

The loss of a Central Office that also serves as a Serving Wire Center (SWC) will be restored as described in Section 5.2.1.

### 5.2.3 Loss of a Central Office with Tandem Functions

When BellSouth loses a Central Office building that serves as an Access Tandem and as a SWC, the ECC will

a) Place specialists and emergency equipment on notice;

b) Inventory the damage to determine what equipment and/or functions are lost;

c) Move containerized emergency equipment and facility equipment to the stricken area, if necessary;

d) Begin reconnecting service on a parity basis for Hospitals, Police and other emergency agencies or End Users served by BellSouth or CLEC in accordance with the TSP priority restoration coding scheme entered in the BellSouth Maintenance database immediately prior to the emergency;

e) Re-direct as much traffic as possible to the alternate access tandem (if available) for delivery to those CLECs utilizing a different location as a SWC;

f) Begin aggregating traffic to a location near the damaged building. From this location, begin re-establishing trunk groups to the CLECs for the delivery of traffic normally found on the direct trunk groups. (This aggregation point may be the alternate access tandem location or another CO on a primary facility route.)

### 5.2.4 Loss of a Facility Hub

In the event that BellSouth loses a facility hub, the recovery process is much the same as above. Once the NMC has observed the problem and administered the appropriate controls, the ECC will assume authority for the repairs. The recovery effort will include

a) Placing specialists and emergency equipment on notice;

b) Inventorying the damage to determine what equipment and/or functions are lost;

c) Moving containerized emergency equipment to the stricken area, if necessary;

d) Reconnecting service on a parity basis for Hospitals, Police and other emergency agencies or End Users served by BellSouth or CLEC in accordance with the TSP priority restoration coding scheme entered in the BellSouth Maintenance database immediately prior to the emergency; and

e) If necessary, BellSouth will aggregate the traffic at another location and build temporary facilities. This alternative would be viable for a location that is destroyed and building repairs are required.

## 5.3 COMBINED OUTAGE (CLEC AND BELLSOUTH EQUIPMENT)

In some instances, a disaster may impact BellSouth's equipment as well as the CLECs'. This situation will be handled in much the same way as described in Section 5.2.3. Since BellSouth and the CLECs will be utilizing temporary equipment, close coordination will be required.

## 6.0 T1 IDENTIFICATION PROCEDURES

During the restoration of service after a disaster, BellSouth may be forced to aggregate traffic for delivery to a CLEC. During this process, T1 traffic may be consolidated onto DS3s and may become unidentifiable to the Carrier. Because resources will be limited, BellSouth may be forced to "package" this traffic entirely differently than normally received by the CLECs. Therefore, a method for identifying the T1 traffic on the DS3s and providing the information to the Carriers is required.

## 7.0 ACRONYMS

| | | |
|---|---|---|
| CLEC | - | Competitive Local Exchange Carrier |
| CO | - | Central Office (BellSouth) |
| DS3 | - | Facility that carries 28 T1s (672 circuits) |
| ECC | - | Emergency Control Center (BellSouth) |
| NMC | - | Network Management Center |
| SWC | - | Serving Wire Center (BellSouth switch) |
| T1 | - | Facility that carries 24 circuits |
| TSP | - | Telecommunications Service Priority |

## Hurricane Information

During a hurricane, BellSouth will make every effort to keep CLECs updated on the status of our network. Information centers will be set up throughout BellSouth Telecommunications. These centers are not intended to be used for escalations, but rather to keep the CLEC informed of network related issues, area damages and dispatch conditions, etc.

Hurricane-related information can also be found on line at http://www.interconnection.bellsouth.com/network/disaster/dis_resp.htm. Information concerning Mechanized Disaster Reports can also be found at this website by clicking on CURRENT MDR REPORTS or by going directly to http://www.interconnection.bellsouth.com/network/disaster/mdrs.htm.

## BST Disaster Management Plan

BellSouth maintenance centers have geographical and redundant communication capabilities. In the event of a disaster removing any maintenance center from service another geographical center would assume maintenance responsibilities. The contact numbers will not change and the transfer will be transparent to the CLEC.

# Attachment 11

# Bona Fide Request and New Business Request Process

## BONA FIDE REQUEST AND NEW BUSINESS REQUEST PROCESS

### 1. BONA FIDE REQUEST

1.1 The Parties agree that Comcast Phone is entitled to order any Network Element, interconnection option or service option required to be made available by FCC or Commission requirements pursuant to the Act. A Bona Fide Request (BFR) is to be used when Comcast Phone makes a request of BellSouth to provide a new or modified Network Element, interconnection option or other service option pursuant to the Act that was not previously provided for in this Agreement.

1.2 A BFR shall be submitted in writing by Comcast Phone and shall specifically identify the requested service date, technical requirements, space requirements and/or such other specifications that clearly define the request such that BellSouth has sufficient information to analyze and prepare a response. Such a request shall also include Comcast Phone's designation of the request as being pursuant to the Telecommunications Act of 1996 (i.e. a BFR). The request shall be sent to Comcast Phone's designated BellSouth Sales contact or Local Contract Manager (LCM).

1.3 Within two (2) business days of receipt of a BFR, BellSouth shall acknowledge in writing its receipt and identify a single point of contact responsible for responding to the BFR and shall request any additional information needed to process the request to the extent known at that time. Notwithstanding the foregoing, BellSouth may reasonably request additional information from Comcast Phone at any time during the processing of the BFR.

1.4 Within thirty (30) business days of BellSouth's receipt of the BFR, if the preliminary analysis of the requested BFR is not of such complexity that it will cause BellSouth to expend extraordinary resources to evaluate the BFR, BellSouth shall respond to Comcast Phone by providing a preliminary analysis of the new or modified Network Element or interconnection option not ordered by the FCC or Commission that is the subject of the BFR. The preliminary analysis shall either confirm that BellSouth will offer access to the new or modified Network Element, interconnection option or service option or confirm that BellSouth will not offer the new or modified Network Element, interconnection option or service option.

1.5 For any new or modified Network Element, interconnection option or service option not ordered by the FCC or Commission, if the preliminary analysis states that BellSouth will offer the new or modified Network Element, interconnection option or service option, the preliminary analysis

will include an estimate of the costs of utilizing existing resources, both personnel and systems, in the development including, but not limited to, request parameters analysis, determination of impacted BellSouth departments, determination of required resources, project management resources, etc. (Development Rate) including a general breakdown of such costs associated with the Network Element, interconnection option or service option and the date the request can be met. If the preliminary analysis states that BellSouth will not offer the new or modified Network Element, interconnection option or service option, BellSouth will provide an explanation of why the request is not technically feasible, does not qualify as a BFR for the new or modified Network Element, interconnection option or service option, should actually be submitted as a NBR or is otherwise not required to be provided under the Act. If BellSouth cannot provide the Network Element, interconnection option or service option by the requested date, BellSouth shall provide an alternative proposed date together with a detailed explanation as to why BellSouth is not able to meet Comcast Phone's requested date.

1.6 For any new or modified Network Element, interconnection option or service option not ordered by the FCC or Commission, if BellSouth determines that the preliminary analysis of the requested BFR is of such complexity that it will cause BellSouth to expend extraordinary resources to evaluate the BFR, BellSouth shall notify Comcast Phone within ten (10) business days of BellSouth's receipt of BFR that a fee will be required prior to the preliminary evaluation of the BFR. Such fee shall be limited to BellSouth's extraordinary expenses directly related to the complex request that require the allocation and engagement of additional resources above the existing allocated resources used on BFR cost development which include, but are not limited to, expenditure of funds to develop feasibility studies, specific resources that are required to determine request requirements (such as operation support system analysts, technical managers, software developers), software impact analysis by specific software developers; software architecture development, hardware impact analysis by specific system analysts, etc. and the request for such fee shall be accompanied with a general breakdown of such costs. If Comcast Phone accepts the complex request evaluation fee proposed by BellSouth, Comcast Phone shall submit such fee within thirty (30) business days of BellSouth's notice that a complex request evaluation fee is required. Within thirty (30) business days of BellSouth's receipt of the complex request evaluation fee, BellSouth shall respond to Comcast Phone by providing a preliminary analysis, consistent with Section 1.4 of this Attachment 11.

1.7 Comcast Phone may cancel a BFR at any time up until thirty (30) business days after receiving BellSouth's preliminary analysis. If Comcast Phone

cancels the BFR within thirty (30) business days after receipt of BellSouth's preliminary analysis, BellSouth shall be entitled to keep any complex request evaluation fee submitted in accordance with Section 1.6 above, minus those costs included in the fee that have not been incurred as of the date of cancellation.

1.8 Comcast Phone will have thirty (30) business days from receipt of preliminary analysis to accept the preliminary analysis or cancel the BFR. If Comcast Phone fails to respond within this thirty (30) business day period, the BFR will be deemed cancelled. Acceptance of the preliminary analysis must be in writing and accompanied by the estimated Development Rate for the new or modified Network Element, interconnection option or service option quoted in the preliminary analysis**.**

1.9 Notwithstanding any other provision of this Agreement, BellSouth shall propose a firm price quote, including the firm Development Rate, the firm nonrecurring rate and the firm recurring rate, and a detailed implementation plan within ten (10) business days of receipt of Comcast Phone's accurate BFR application for a Network Element, interconnection option or service option that is operational at the time of the request; thirty (30) business days of receipt of Comcast Phone's accurate BFR application for a new or modified Network Element, interconnection option or service option ordered by the FCC or Commission; and within sixty (60) business days of receipt of Comcast Phone's accurate BFR application for a new or modified Network Element, interconnection option or service option not ordered by the FCC or Commission or not operational at the time of the request. The firm nonrecurring rate will not include any of the Development Rate or the complex request evaluation fee, if required, in the calculation of this rate. Such firm price quote shall not exceed the estimate provided with the preliminary analysis by more than 25%.

1.10 Comcast Phone shall have thirty (30) business days from receipt of firm price quote to accept or deny the firm price quote and submit any additional Development or nonrecurring rates quoted in the firm price quote.

1.11 Unless Comcast Phone agrees otherwise, all prices shall be consistent with the applicable pricing principles and provisions of the Act.

1.12 If Comcast Phone believes that BellSouth's firm price quote is not consistent with the requirements of the Act, either Party may seek dispute resolution in accordance with the dispute resolution provisions set forth in the General Terms and Conditions of this Agreement.

1.13 Upon agreement to the rates, terms and conditions of a BFR, the Parties shall negotiate in good faith an amendment to this Agreement.

**2 New Business Request**

2.1 Comcast Phone also shall be permitted to request the development of new or modified facilities or service options which may not be required by the Act. Procedures applicable to requesting the addition of such elements, services and options are specified in this Attachment 11. A New Business Request (NBR) is to be used by Comcast Phone to make a request of BellSouth for a new or modified feature or capability of an existing product or service, a new product or service that is not deployed within the BellSouth network or operations and business support systems, or a new or modified service option that was not previously included in this Agreement (Requested NBR Services) and is not required by the Act.

2.2 An NBR shall be submitted in writing by Comcast Phone and shall specifically identify the requested service date, technical requirements, space requirements and/or such specifications that clearly define the request such that BellSouth has sufficient information to analyze and prepare a response. The request shall be sent to Comcast Phone's designated BellSouth Sales contact or LCM.

2.3 Within two (2) business days of receipt of an NBR, BellSouth shall acknowledge in writing its receipt and identify a single point of contact responsible for responding to the NBR and shall request any additional information needed to process the request to the extent known at that time. Notwithstanding the foregoing, BellSouth may reasonably request additional information from Comcast Phone at any time during the processing of the NBR.

2.4 If the preliminary analysis of the request NBR is not of such complexity that it will cause BellSouth to expend extraordinary resources to evaluate the NBR, within thirty (30) business days of its receipt of the NBR, BellSouth shall respond to Comcast Phone by providing a preliminary analysis of such Requested NBR Services that are the subject of the NBR. The preliminary analysis shall either confirm that BellSouth will offer access to the Requested NBR Services or confirm that BellSouth will not offer the Requested NBR Services.

2.5 If the preliminary analysis states that BellSouth will offer the Requested NBR Services, the preliminary analysis will include an estimate of the Development Rate including a general breakdown of costs and the date the request can be met. If BellSouth cannot provide the Requested NBR Service by the requested date, it shall provide an alternative proposed date

together with a detailed explanation as to why BellSouth is not able to meet Comcast Phone's requested date.

2.6 If BellSouth determines that the preliminary analysis of the requested NBR is of such complexity that it will cause BellSouth to expend extraordinary resources to evaluate the NBR, BellSouth shall notify Comcast Phone within ten (10) business days of BellSouth's notice that a complex request evaluation fee is required prior to the evaluation of the NBR. Such fee shall be limited to BellSouth's extraordinary expenses directly related to the complex request. If Comcast Phone accepts the complex request evaluation fee amount proposed by BellSouth, Comcast Phone shall submit such complex request evaluation fee within thirty (30) business days of BellSouth's notice that a complex request evaluation fee is required.

2.7 Within thirty (30) business days of BellSouth's receipt of the complex request evaluation fee, BellSouth shall respond to Comcast Phone by providing a preliminary analysis of such Requested NBR Services.

2.8 Comcast Phone may cancel an NBR at any time. If Comcast Phone cancels the request more than ten (10) business days after submitting it, Comcast Phone shall pay BellSouth's reasonable and demonstrable costs of processing and/or implementing the NBR up to the date of cancellation in addition to any fee submitted in accordance with Section 1.6 above.

2.9 Comcast Phone will have thirty (30) business days from receipt of the preliminary analysis to accept the preliminary analysis or cancel the NBR. If Comcast Phone fails to respond within this thirty (30) business day period, the NBR will be deemed cancelled.

2.10 Acceptance of the preliminary analysis must be in writing and accompanied by the estimated Development Rate for the Requested NBR Services quoted in the preliminary analysis.

2.11 BellSouth shall propose a firm price quote including the firm Development Rate, the firm nonrecurring rate, and the firm recurring rate, and a detailed implementation plan within ten (10) business days of receipt of Comcast Phone's accurate NBR application for a Requested NBR Service that is operational at the time of the request and within sixty (60) business days of receipt of Comcast Phone's accurate NBR application for the Requested NBR Services not operational at the time of the request. The firm nonrecurring rate will not include any of the Development Rate or the complex request evaluation fee, if required, in the calculation of this rate. Such firm price quote shall not exceed the estimate provided with the preliminary analysis by more than 25%.

2.12 Comcast Phone shall have thirty (30) business days from receipt of the firm price quote to accept or deny the firm price quote and submit any additional nonrecurring, non-refundable fees quoted in the firm price quote. If the firm price quote is less than the preliminary analysis' estimate of the Development Rate, BellSouth will credit Comcast Phone's account for the difference.

2.13 Upon agreement to the rates, terms and conditions of a NBR, an amendment to this Agreement, or a separate agreement, may be required and the Parties shall negotiate such agreement or amendment in good faith.

**Amendment to the Agreement**
**Between**
**Comcast Phone II, Inc. Comcast Phone, LLC**
**and**
**BellSouth Telecommunications, Inc.**
**Dated September 25, 2005**

Pursuant to this Amendment, (the "Amendment"), Comcast Phone II, Inc. Comcast Phone, LLC ("CUSTOMER"), and BellSouth Telecommunications, Inc. ("BellSouth"), hereinafter referred to collectively as the "Parties," hereby agree to amend that certain Interconnection Agreement between the Parties dated September 25, 2005 ("Agreement") to be effective as of the date of the last signature to the Amendment ("Effective Date").

NOW THEREFORE, in consideration of the mutual provisions contained herein and other good and valuable consideration, the receipt and sufficiency of which are hereby acknowledged, the Parties hereby covenant and agree as follows:

1. The Parties hereby agree to modify the Notices Section of the General Terms and Conditions of Comcast Phone II, Inc. Comcast Phone, LLC's Agreement with the following:

   Comcast Phone II, Inc. Comcast Phone, LLC.

   Beth Choroser
   Senior Director of Regulatory Compliance
   Comcast Cable Communications
   1500 Market Street
   Philadelphia, PA 19102
   Phone: 215-981-7893
   Fax: 267-675-5039
   Email: beth_choroser@comcast.com

   AND

   Brian Rankin
   Assistant General Counsel
   Comcast Cable Communications
   1500 Market Street
   Philadelphia, PA 19102
   Phone: 215-320-7325
   Fax: 267-675-5039
   Email: brian_rankin@comcast.com

2. All of the other provisions of the Agreement, dated September 25, 2005, shall remain in full force and effect.

IN WITNESS WHEREOF, the Parties have executed this Amendment the day and year written below.

**BellSouth Telecommunications, Inc.**

By: _____

for Name: Kristen E. Shore

Title: Director

Date: 2/28/07

**Comcast Phone IL, Inc. Comcast Phone, LLC**

By: _____

Name: Susan Jin-Davis

Title: Vice President of Corporate Development

Date: 2/23/07

Version: Notices Section Change

**AMENDMENT TO**
**INTERCONNECTION AGREEMENT UNDER SECTIONS 251 AND 252 OF THE TELECOMMUNICATIONS ACT OF 1996**
**BETWEEN**
**BELLSOUTH TELECOMMUNICATIONS, INC.**
**d/b/a AT&T ALABAMA, AT&T LOUISIANA, AT&T MISSISSIPPI,**
**AT&T NORTH CAROLINA, AT&T SOUTH CAROLINA AND**
**AT&T TENNESSEE**
**AND**
**COMCAST PHONE II, INC. COMCAST PHONE, LLC**

The Interconnection Agreement dated September 25, 2005 by and between BellSouth Telecommunications, Inc. d/b/a AT&T Alabama, AT&T Louisiana, AT&T Mississippi, AT&T North Carolina, AT&T South Carolina and AT&T Tennessee ("AT&T") and Comcast Phone II, Inc. Comcast Phone, LLC ("Comcast Phone") ("Agreement") effective in the states of Alabama, Louisiana, Mississippi, North Carolina, South Carolina and Tennessee is hereby amended as follows:

1. The Parties agree that **AT&T-9STATE** shall be defined as the states of Alabama, Florida, Georgia, Kentucky, Louisiana, Mississippi, North Carolina, South Carolina and Tennessee.

2. Section 2.1 of the General Terms and Conditions is amended by adding the following section:

   2.1.1 Notwithstanding anything to the contrary in this section 2.1, the original expiration date of this Agreement, as modified by this Amendment, will be extended for a period of three (3) years from September 24, 2008 until September 24, 2011 (the "Extended Expiration Date"). The Agreement shall expire on the Extended Expiration Date; provided, however, that during the period from the effective date of this Amendment until the Extended Expiration Date, the Agreement may be terminated earlier either by written notice from Comcast Phone, by AT&T pursuant to the Agreement's early termination provisions, or by mutual agreement of the parties.

3. Comcast Phone acknowledges and agrees that it will amend the Agreement in accordance with the change of law provisions in the Parties interconnection agreement, to reflect future changes of law as and when they may arise.

4. EXCEPT AS MODIFIED HEREIN, ALL OTHER TERMS AND CONDITIONS OF THE UNDERLYING AGREEMENT SHALL REMAIN UNCHANGED AND IN FULL FORCE AND EFFECT.

5. In entering into this Amendment neither Party waives, and each Party expressly reserves, any rights, remedies or arguments it may have at law or under the intervening law or regulatory change provisions in the underlying Agreement (including intervening law rights asserted by either Party via written notice predating this Amendment) with respect to any orders, decisions, legislation or proceedings and any remands thereof, which the Parties have not yet fully incorporated into this Agreement or which may be the subject of further review.

6. This Amendment shall be filed with and is subject to approval by the Commissions and shall become effective on the date of the last signature executing the Amendment.

**Comcast Phone II, Inc. Comcast Phone, LLC**

By:

Name: Susan Jio-Davis
(Print or Type)

Title: V.P. Corp. Development
(Print or Type)

Date: 6-6-08

**BellSouth Telecommunications, Inc. d/b/a AT&T Alabama, AT&T Louisiana, AT&T Mississippi, AT&T North Carolina, AT&T South Carolina and AT&T Tennessee**

By: Kristen E. Shore

Name: Kristen E. Shore

Title: Director

Date: 6/11/08

| | OCN # | ACNA | | OCN # | ACNA |
|---|---|---|---|---|---|
| **ALABAMA** | 363D | BPH | **NORTH CAROLINA** | inactive | currently |
| **LOUISIANA** | 088E | BPH | **SOUTH CAROLINA** | 4730 | BPH |
| **MISSISSIPPI** | 089E | BPH | **TENNESSEE** | 408D | BPH |