BELLSOUTH® / CLEC Agreement

Customer Name: KMC Telecom III, LLC

KMC Telecom III, LLC - Renegotiations 2005	2
General Terms and Conditions	3
Signature Page	30
ATT 1 - Resale	31
ATT 1 - Exhibit E - Discounts & Rates	60
ATT 2 - Network Elements & Other Services	69
ATT 2 - Network Elements - Exhibit A - Rates	136
ATT 2 - Network Elements - Exhibit B - Rates	368
ATT 3 - Network Interconnections	405
ATT 3 - Exhibit A - Rates	452
ATT 3 - Exhibit F	470
ATT 4 - Collocation	486
ATT 4 - Exhibit B - Rates	543
ATT 5 - Access to Numbers & Number Portability	598
ATT 6 - Ordering	603
ATT 7 - Billing	624
ATT 7 - Exhibit A - Rates	648
ATT 7 - Exhibits B & C	657
ATT 8 - Rights of Way	660
ATT 9 - Performance Measurements	662
ATT 10 - Disaster Recovery	664
ATT 11 - BFR and NBR Process	672

Note: This page is not part of the actual signed contract/amendment, but is present for record keeping purposes only.

Interconnection Agreement

Between

BellSouth Telecommunications, Inc.

and

KMC Telecom III, LLC

AGREEMENT
GENERAL TERMS AND CONDITIONS

This agreement (Agreement) is made by and between BellSouth Telecommunications, Inc., ("BellSouth"), a Georgia corporation, and KMC Telecom III, LLC (KMC III), a limited liability company, and shall be effective on the Effective Date, as defined herein. This Agreement may refer to either BellSouth or KMC III or both as a "Party" or "Parties."

W I T N E S S E T H

WHEREAS, BellSouth is an incumbent local exchange telecommunications company authorized to provide telecommunications services in the states of Alabama, Florida, Georgia, Kentucky, Louisiana, Mississippi, North Carolina, South Carolina and Tennessee; and

WHEREAS, KMC III is or seeks to become a CLEC authorized to provide telecommunications services in the states of Alabama, Florida, Georgia, Kentucky, Louisiana, Mississippi, North Carolina, South Carolina, and Tennessee; and

WHEREAS, KMC III wishes to resell BellSouth's telecommunications services and purchase network elements and other services, and, primarily in connection therewith, may wish to utilize collocation space as set forth in Attachment 4 of this Agreement); and

WHEREAS, the Parties wish to interconnect their facilities and exchange traffic pursuant to and consistent with the rights and obligations set forth in Sections 251 and 252 of the Act.

NOW THEREFORE, in consideration of the mutual agreements contained herein, BellSouth and KMC III agree as follows:

1. **Definitions**

The use of the term end user or customer throughout this Agreement shall not be construed to expand on or eliminate any rights or obligations of the Parties.

1.1 The definitions set forth in this Section apply to the Agreement as a whole and both Parties' conduct thereunder. Additional definitions are included in the various attachments to this Agreement. Unless the context clearly indicates otherwise, any term defined or used in the singular shall include the plural.

1.2 **Affiliate** is defined as a person that (directly or indirectly) owns or controls, is owned or controlled by, or is under common ownership or control with, another person. For purposes of this paragraph, the term "own" means to own an equity interest (or equivalent thereof) of more than ten (10) percent.

1.3 **Commission** is defined as the appropriate regulatory agency in each state of BellSouth's nine-state region (Alabama, Florida, Georgia, Kentucky, Louisiana, Mississippi, North Carolina, South Carolina, and Tennessee).

1.4 **Competitive Local Exchange Carrier (CLEC)** means a telephone company certified by the Commission to provide local exchange service within BellSouth's franchised area.

1.5 **Day** is defined to mean calendar day, unless otherwise expressly noted.

1.6 **Effective Date** is defined as the date that the Agreement is effective and it shall be effective June 30, 2005. Upon request by KMC III for a future amendment to incorporate Commission ordered rates, at KMC III's request BellSouth shall only propose an amendment with language and rates that are necessary in order to implement such order. Such amendment shall be effective ten (10) days after the date of the last signature executing the amendment or as otherwise ordered in a FCC or Commission order or rule. Non rate impacting future amendments will be effective as of the date of the last signature executing the amendment or as otherwise ordered in a FCC or Commission order or rule. The Parties agree that such signature shall not be unreasonably delayed.

1.7 **FCC** means the Federal Communications Commission.

1.8 **General Terms and Conditions** means this document including all of the terms, provisions and conditions set forth herein.

1.9 **National Holiday** means New Year's Day, Martin Luther King Jr. Day, President's Day/Washington's Birthday, Memorial Day, Independence Day, Labor Day, Columbus Day, Veterans' Day, Thanksgiving Day, Christmas Day. In the calculation of intervals of less than ten (10) days national holidays will be excluded.

1.10 **Project Management** means the BellSouth Professional Services organization.

1.11 **Telecommunications** means the transmission, between or among points specified by the user, of information of the user's choosing, without change in the form or content of the information as sent and received.

1.12 **Telecommunications Service** means the offering of telecommunications for a fee directly to the public, or to such classes of users as to be effectively available directly to the public, regardless of the facilities used.

1.13 **Telecommunications Act of 1996 (**1996 Act**)** means Public Law 104-104 of the United States Congress effective February 8, 1996. The 1996 Act is part of the Communications Act of 1934 (47 U.S.C. Section 1 et. seq.) as amended (the Act).

2. **CLEC Certification**

2.1 Prior to execution of this Agreement, BellSouth may request and KMC III agrees to provide BellSouth in writing KMC III's CLEC certification for all states covered by this Agreement except Kentucky. BellSouth will file this Agreement with the appropriate Commission for approval.

2.2 To the extent KMC III is not certified as a CLEC in each state covered by this Agreement as of the execution hereof, KMC III will notify BellSouth in writing and provide CLEC certification when it becomes certified to operate in any other state covered by this Agreement. Upon notification, BellSouth will file this Agreement with the appropriate Commission for approval.

3. **Term of the Agreement**

3.1 The term of this Agreement shall be three and one half (3 ½) years, beginning on the Effective Date and shall apply to the BellSouth territory in the state(s) of Alabama, Florida, Georgia, Kentucky, Louisiana, Mississippi, North Carolina, South Carolina and Tennessee. Notwithstanding any prior agreement of the Parties, the rates, terms and conditions of this Agreement shall not be applied retroactively prior to the Effective Date.

3.2 The Parties agree that by no earlier than two hundred seventy (270) days and no later than one hundred and eighty (180) days prior to the expiration of this Agreement, they shall commence negotiations for a new agreement for a new agreement to be effective beginning on the expiration date of this Agreement (Subsequent Agreement).

3.3 If, within one hundred and thirty-five (135) days of the designated start date of the negotiation referred to in Section 3.2, above, the Parties are unable to satisfactorily negotiate new terms, conditions and prices for a Subsequent Agreement, either Party may petition the Commission to establish appropriate terms, conditions and prices pursuant to 47 U.S.C. § 252. The Parties agree that, in such event, they shall encourage the Commission to issue its order regarding the Subsequent Agreement no later than the expiration date of this Agreement. The Parties further agree that in the event the Commission does not issue its Arbitration order prior to the expiration date of this Agreement, or if the Parties continue beyond the expiration date of this Agreement to negotiate the Subsequent Agreement, the Subsequent Agreement ultimately ordered by the Commission, or negotiated by the Parties, will be effective upon the effective date set forth in the Subsequent Agreement.

3.4 Notwithstanding the foregoing and except as set forth in Section 3.4.1 below, in the event that, as of the date of the expiration of this Agreement and conversion of this Agreement to a month-to-month term, the Parties have not entered into a Subsequent Agreement and no arbitration proceeding has been filed in accordance with Section 252 of the Act, then either Party may terminate this Agreement upon sixty (60) days notice to the other Party. In the event that BellSouth terminates this Agreement as provided above, BellSouth shall continue to offer services to KMC

III pursuant to BellSouth's then current standard interconnection agreement or KMC III may exercise its rights under Section 252(i) of the Act. In the event that BellSouth's standard interconnection agreement becomes effective as between the Parties or KMC III adopts another agreement, the Parties may continue to negotiate a Subsequent Agreement, and the terms of such Subsequent Agreement shall be effective as of the effective date stated in such Subsequent Agreement.

3.4.1 If an arbitration proceeding has been filed in accordance with Section 252 of the Act and if the Commission does not issue its order prior to the expiration of this Agreement, this Agreement shall be deemed extended on a month-to-month basis until the Subsequent Agreement becomes effective. The terms of such Subsequent Agreement shall be effective as of the effective date stated in such Subsequent Agreement and shall not be applied retroactively to the expiration date of this Agreement unless the Parties agree otherwise. Neither Party shall refuse to provide services to the other Party during the negotiation of the Subsequent Agreement or the transition from this Agreement to the Subsequent Agreement.

4. Termination

4.1 KMC III may terminate any network element, interconnection or other services provided under this Agreement upon thirty (30) days written notice to BellSouth. In such cases, KMC III's obligation to pay for such network element, interconnection or other services shall be limited to the amounts due provided up to and including the date of termination.

4.2 Upon notice of termination, the Parties agree to cooperate in an orderly and efficient transition to KMC III or another vendor and to exercise their best efforts to effect an orderly and efficient transition.

5. Operational Support Systems

5.1 KMC III shall pay charges for Operational Support Systems (OSS) as set forth in this Agreement in Attachment 1 and/or in Attachments 2, 3 and 5, as applicable.

6. Parity

6.1 When KMC III purchases services from BellSouth pursuant to Attachment 1 of this Agreement for the purposes of Resale to its customers, such services shall be at least equal in quality, subject to the same conditions, and provided within the same provisioning time intervals that BellSouth provides to its Affiliates, subsidiaries and customers. To the extent technically feasible, the quality of a Network Element, as well as the quality of the access to such Network Element provided by BellSouth to KMC III shall be at least equal in quality to that which BellSouth provides to itself, its Affiliates or any other Telecommunications carrier. The quality of the interconnection between the network of BellSouth and the network of KMC III shall be at a level that is at least equal to that which BellSouth provides itself, a subsidiary, an Affiliate, or any other party. The interconnection facilities shall be designed to meet the same technical criteria and service standards

that are used within BellSouth's network and shall extend to a consideration of service quality as perceived by BellSouth's customers and service quality as perceived by KMC III and its customers.

7. **White Pages Directory Listings Requirements**

7.1 Listings. KMC III shall provide all new, changed and deleted listings on a timely basis and BellSouth or its agent will include KMC III residential and business customer listings in the appropriate White Pages (residential and business) or alphabetical directories in the geographic areas covered by this Interconnection Agreement in a nondiscrimatory manner and at parity. Directory listings will make no distinction between KMC III and BellSouth subscribers.

7.1.1 Rates. So long as KMC III provides subscriber listing information (SLI) to BellSouth in accordance with Section 7.2 below, BellSouth shall provide to KMC III one (1) primary White Pages listing per KMC III subscriber at no charge for the initial listing. Additions or changes to the initial subscriber White Pages listing shall incur a secondary service charge in accordance with Section A4.2 of BellSouth's General Subscriber Services Tariff (GSST).

7.2 Procedures for Submitting KMC III SLI are found in The BellSouth Business Rules for Local Ordering located at http//www.interconnection.bellsouth.com.

7.2.1 KMC III authorizes BellSouth to release all KMC III SLI provided to BellSouth by KMC III to qualifying third parties via either license agreement or BellSouth's Directory Publishers Database Service (DPDS), GSST, Section A38.2, as the same may be amended from time to time. Such KMC III SLI shall be intermingled with BellSouth's own customer listings and listings of any other CLEC that has authorized a similar release of SLI.

7.2.2 No compensation shall be paid to KMC III for BellSouth's receipt of KMC III SLI, or for the subsequent release to third parties of such SLI. In addition, to the extent BellSouth incurs costs to modify its systems to enable the release of KMC III's SLI, or costs on an ongoing basis to administer the release of KMC III's SLI, KMC III shall pay to BellSouth its proportionate share of the reasonable costs associated therewith. At any time that costs may be incurred to administer the release of KMC III's SLI, KMC III will be notified. If KMC III does not wish to pay its proportionate share of these reasonable costs, KMC III may instruct BellSouth that it does not wish to release its SLI to independent publishers, and KMC III shall amend this Agreement accordingly. KMC III will be liable for all costs incurred until the effective date of the amendment.

7.2.3 Neither BellSouth nor any agent shall be liable for the content or accuracy of any SLI provided by KMC III under this Agreement. Except to the extent caused by gross negligence or willfull misconduct by BellSouth, KMC III shall indemnify, hold harmless and defend BellSouth and its agents from and against any damages, losses, liabilities, demands, claims, suits, judgments, costs and expenses (including

but not limited to reasonable attorneys' fees and expenses) arising from BellSouth's tariff obligations or otherwise and resulting from or arising out of any third party's claim of inaccurate KMC III listings or use of the SLI provided pursuant to this Agreement. BellSouth may forward to KMC III any complaints received by BellSouth relating to the accuracy or quality of KMC III listings.

7.2.4 BellSouth agrees to address any issue regarding a directory listing raised by a KMC III customer in the same manner that BellSouth does for BellSouth's customers.

7.2.5 Listings and subsequent updates will be released consistent with BellSouth system changes and/or update scheduling requirements.

7.3 Unlisted/Non-Published Subscribers. KMC III will be required to provide to BellSouth the names, addresses and telephone numbers of all KMC III customers who wish to be omitted from directories.

7.4 Inclusion of KMC III Customers in Directory Assistance Database. BellSouth will include and maintain KMC III subscriber listings in BellSouth's Directory Assistance databases at no recurring charge and KMC III shall provide such Directory Assistance listings to BellSouth at no recurring charge.

7.5 Listing Information Confidentiality. BellSouth will afford KMC III's directory listing information the same level of confidentiality that BellSouth affords its own directory listing information.

7.6 Additional, Designer, Non-Listed and Non-Published Listings. BellSouth shall provide Additional, Designer, Non-Listed and Non-Published White Pages Listings to KMC III's customers under the same rates, terms and conditions as BellSouth makes such listings available to its own customers. Where BellSouth charges its customers for Additional, Designer, Non-Listed and Non-Published White Pages Listings, BellSouth shall publish such listings under the same rates, terms and conditions to KMC III for its Resale customers subject to the applicable wholesale rates in Attachment 1.

7.7 Directories. BellSouth or its agent shall make available White Pages directories to KMC III subscribers at no charge or as specified in a separate agreement with BellSouth's agent.

7.7.1 Delivery. BellSouth or its agent shall deliver White Pages directories to KMC III customers at parity with BellSouth's delivery of directories to its own customers.

8. Local Dialing Parity

8.1 BellSouth shall provide local dialing parity as described in the Act and required by FCC rules, regulations and policies. KMC III customers shall not have to dial any greater number of digits than BellSouth customers to complete the same call. In addition, KMC III customers shall experience at least the same service quality as

BellSouth customers in terms of post-dial delay, call completion rate and transmission quality.

9. **Court Ordered Requests for Call Detail Records and Other Subscriber Information**

9.1 Subpoenas Directed to BellSouth. Where BellSouth provides resold services or local switching for KMC III, BellSouth shall respond to subpoenas and court ordered requests delivered directly to BellSouth for the purpose of providing call detail records when the targeted telephone numbers belong to KMC III customers or its Customer's customers. Billing for such requests will be generated by BellSouth and directed to the law enforcement agency initiating the request. BellSouth shall maintain such information for KMC III customers or its Customer's customers for the same length of time it maintains such information for its own customers.

9.2 Subpoenas Directed to KMC III. Where BellSouth is providing to KMC III Telecommunications Services for resale or providing to KMC III the local switching function, then KMC III agrees that in those cases where KMC III receives subpoenas or court ordered requests regarding targeted telephone numbers belonging to KMC III customers, and where KMC III does not have the requested information, KMC III will advise the law enforcement agency initiating the request to redirect the subpoena or court ordered request to BellSouth for handling in accordance with Section 9.1 above.

9.3 In all other instances, where either Party receives a request for information involving the other Party's customer, the Party receiving the request will advise the law enforcement agency initiating the request to redirect such request to the other Party.

10. **Liability and Indemnification**

10.1 KMC III Liability. In the event that KMC III consists of two (2) or more separate entities as set forth in this Agreement and/or any Amendments hereto, all such entities that are Parties to this Agreement shall be jointly and severally liable for the obligations of KMC III under this Agreement.

10.2 The Parties have negotiated specific provisions in Section 10 of Attachment 3 and Section 5 of Attachment 7 to which the provisions of the following sentence shall not apply. For all other matters, BellSouth shall take financial responsibility for its own actions in causing or contributing to unbillable or uncollectible, KMC III revenue.

10.3 Liability for Acts or Omissions of Third Parties. The Parties shall not be liable to each other for any act or omission of another Telecommunications company.

10.4 Limitation of Liability

10.4.1 Except for any indemnification obligations of the Parties hereunder, and except in cases of the provisioning Party's gross negligence or willful misconduct, each Party's liability to the other for any loss, cost, claim, injury, liability or expense, including reasonable attorneys' fees relating to or arising out of any negligent act or omission in its performance of this Agreement, whether in contract or in tort, shall be limited to a credit for the actual cost of the services or functions not performed or improperly performed.

10.4.2 Limitations in Tariffs. A Party may, in its sole discretion, provide in its tariffs and contracts with its customer, Customers and third parties that relate to any service, product or function provided or contemplated under this Agreement, that to the maximum extent permitted by Applicable Law, such Party shall not be liable to the customer or third party for (i) any loss relating to or arising out of this Agreement, whether in contract, tort or otherwise, that exceeds the amount such Party would have charged that applicable person for the service, product or function that gave rise to such loss and (ii) consequential damages. To the extent that a Party elects not to place in its tariffs or contracts such limitations of liability, and the other Party incurs a loss as a result thereof, such Party shall indemnify and reimburse the other Party for that portion of the loss that would have been limited had the first Party included in its tariffs and contracts the limitations of liability that such other Party included in its own tariffs at the time of such loss.

10.4.3 Neither BellSouth nor KMC III shall be liable for physical damage to the other Party's premises, facilities and equipment or customer or customer premises resulting from the furnishing of a service, including, but not limited to, the installation and removal of equipment or associated wiring, except to the extent caused by a Party's negligence, gross negligence or willful misconduct or by a Party's failure to ground properly a local loop after disconnection.

10.4.4 Nothing in this Section 10 shall limit a Party's obligation to indemnify or hold harmless the other Party set forth elsewhere in this Agreement. Except in cases of gross negligence or willful or intentional misconduct, under no circumstance shall a Party be responsible or liable for indirect, incidental, or consequential damages. In connection with this limitation of liability, each Party recognizes that the other Party may, from time to time, provide advice, make recommendations, or supply other analyses related to the services or facilities described in this Agreement, and, while each Party shall use diligent efforts in this regard, the Parties acknowledge and agree that this limitation of liability shall apply to provision of such advice, recommendations, and analyses.

10.4.5 To the extent any specific provision of this Agreement purports to impose liability, or limitation of liability, on either Party different from or in conflict with the liability or limitation of liability set forth in this Section, then with respect to the particular facts or circumstances covered by the more specific provision, the liability or limitation of liability contained in such specific provision shall apply. Nothing in this Section shall be interpreted to limit KMC III's rights to remedies and/or claims provided or contemplated elsewhere in this Agreement.

10.5 Indemnification for Certain Claims. The Party providing services hereunder, its Affiliates and its parent company, shall be indemnified, except to the extent caused by the providing Party's gross negligence or willful misconduct, defended and held harmless by the Party receiving services hereunder against any claim, loss or damage arising from the receiving Party's use of the services provided under this Agreement pertaining to (1) claims for libel, slander or invasion of privacy arising from the content of the receiving Party's own communications, or (2) any claim, loss or damage claimed by the customer of the Party receiving services arising from such company's use or reliance on the providing Party's services, actions, duties, or obligations arising out of this Agreement.

10.5.1 Promptly after receipt of notice of the commencement of, or of any definite and colorable written claim or written threat as to the commencement of any action or proceeding relating to a matter or matters for which a Party may seek indemnification pursuant to this Section 10.5.1, such Party (the "Indemnified Party") shall promptly give written notice to the other Party (the "Indemnifying Party") of the action or proceeding so commenced (or claimed or threatened for commencement as aforesaid), whereupon the Indemnifying Party shall, be obligated (unless the Indemnified Party shall have otherwise waived such obligation in its sole and absolute discretion by its written election to maintain its own defense, subject, in such event and in all respects, to the exemptions from and limitations applicable to the Indemnifying Party's liability as provided in the final sentence of this Section 10.5.1) to assume the defense thereof at its sole cost and expense using counsel selected by the Indemnifying Party and reasonably acceptable to the Indemnified Party in its reasonable and good faith business judgment; provided that, the Parties hereby acknowledge and agree that the failure by an Indemnified Party to notify the Indemnifying Party as to a claim or the commencement (or written claim or threat of commencement) of any action or proceeding as aforesaid shall not relieve the Indemnifying Party of any liability it may have to the Indemnified Party with respect thereto, except and to the extent that the Indemnifying Party shall have actually and demonstrably incurred material prejudice, or suffered forfeiture of material substantive defenses or claims, resulting directly and exclusively from the failure to so notify. From and after assumption by an Indemnifying Party of the defense of any such pending (or claimed or threatened, as above) claim, action or proceeding, the Indemnified Party shall cooperate in a good faith and commercially-reasonable manner with the Indemnifying Party's reasonable requests for assistance or information relating to such action or proceeding, at the Indemnifying Party's sole cost and expense. The Indemnified Party shall retain the right to participate in the investigation and defense of such action or proceeding, with separate counsel chosen and paid for by the Indemnified Party. Unless the Indemnified Party shall have elected in its sole and absolute discretion to waive any further right to be indemnified with respect to any such action, proceeding or claim the Indemnified Party's counsel shall not unreasonably interfere with the defense by the Indemnifying Party and its counsel, and, absent a good faith and commercially reasonable basis therefore, as communicated in writing to the Indemnifying Party in reasonable detail, the

Indemnified Party's counsel shall not raise any claims, defenses, or objections or otherwise take a course of action in representation of the Indemnified Party when such course of action would unreasonably conflict with a course of action or inaction chosen by the Indemnifying Party. An Indemnifying Party shall not be liable under this Section 10.5.1 for settlements or compromises by the Indemnified Party of any claim, action or proceeding commenced (or claimed or threatened for commencement as aforesaid) as described in this Section 10.5.1 unless the Indemnifying Party shall have previously consented in writing thereto (such consent not to be unreasonably withheld, conditioned or delayed) or unless the Indemnifying Party has been given notice and reasonable opportunity to defend such claim, action or proceeding and has failed to promptly undertake the defense.

10.6 Disclaimer. EXCEPT AS SPECIFICALLY PROVIDED TO THE CONTRARY IN THIS AGREEMENT INCLUDING ALL ATTACHMENTS AND EXHIBITS HERETO AND ANY APPLICABLE SERVICE QUALITY STANDARDS, MEASURES, ASSURANCES AND ASSOCIATED REMEDIES ORDERED BY THE FCC OR COMMISSION, NEITHER PARTY MAKES ANY REPRESENTATIONS OR WARRANTIES TO THE OTHER PARTY CONCERNING THE SPECIFIC QUALITY OF ANY SERVICES, OR FACILITIES PROVIDED UNDER THIS AGREEMENT. THE PARTIES DISCLAIM, WITHOUT LIMITATION, ANY WARRANTY OR GUARANTEE OF MERCHANTABILITY OR FITNESS FOR A PARTICULAR PURPOSE, ARISING FROM COURSE OF PERFORMANCE, COURSE OF DEALING, OR FROM USAGES OF TRADE.

11. Intellectual Property Rights and Indemnification

11.1 No License. No patent, copyright, trademark or other proprietary right is licensed, granted or otherwise transferred by this Agreement. A Party's use of the other Party's name, service marks and trademarks shall be in accordance with Applicable Law.

11.2 Ownership of Intellectual Property. Any intellectual property that originates from or is developed by a Party shall remain the exclusive property of that Party. Except for a limited, non-assignable, non-exclusive, non-transferable license to use patents or copyrights to the extent necessary for the Parties to use any facilities or equipment (including software) or to receive any service solely as provided under this Agreement, no license in patent, copyright, trademark or trade secret, or other proprietary or intellectual property right, now or hereafter owned, controlled or licensable by a Party, is granted to the other Party. Neither shall it be implied nor arise by estoppel. Any trademark, copyright or other proprietary notices appearing on software or documents provided by one Party to the other Party for the receiving Party's internal use, shall not be removed provided that such notices are neither visible to nor detectable by the receiving Party's customers. It is the responsibility of each Party to ensure at no additional cost to the other Party that it has obtained any necessary licenses in relation to intellectual property of third Parties used in its network that may be required to enable the other Party to use

any facilities or equipment (including software), to receive any service, or to perform its respective obligations under this Agreement.

11.3 Indemnification. The Party providing a service pursuant to this Agreement will defend the Party receiving such service or data provided as a result of such service against claims of infringement arising solely from the use by the receiving Party of such service in the manner contemplated under this Agreement and will indemnify and hold harmless the receiving Party from and against any loss, cost, expense or liability associated with claims.

11.4 Claim of Infringement. In the event that use of any facilities or equipment (including software), becomes, or in the reasonable judgment of the Party who owns the affected network is likely to become, the subject of a claim, action, suit, or proceeding based on intellectual property infringement, then said Party shall promptly and at its sole expense:

11.4.1 modify or replace the applicable facilities or equipment (including software) while maintaining form and function, or

11.4.2 obtain a license sufficient to allow such use to continue, or

11.4.3 in the event that the actions contemplated by Section 11.4.1 or 11.4.2 are commercially unreasonable, then said Party may terminate, upon reasonable notice, this contract with respect to use of, or services provided through use of, the affected facilities or equipment (including software), but solely to the extent required to avoid the infringement claim.

11.4.4 Neither Party's obligations under this Section shall apply to the extent the infringement is caused by: (i) modification of the facilities or equipment (including software) by the indemnitee; (ii) use by the indemnitee of the facilities or equipment (including software) in combination with equipment or facilities (including software) not provided or authorized by the indemnitor, provided the facilities or equipment (including software) would not be infringing if used alone; (iii) conformance to specifications of the indemnitee which would necessarily result in infringement; or (iv) continued use by the indemnitee of the affected facilities or equipment (including software) after being placed on notice to discontinue use as set forth herein.

11.4.5 The foregoing shall constitute the Parties' sole and exclusive remedies and obligations with respect to a third party claim of intellectual property infringement arising out of the conduct of business under this Agreement.

11.5 Dispute Resolution. Any claim arising under this Section shall be excluded from the dispute resolution procedures set forth in Section 13 below and shall be brought in a court of competent jurisdiction.

12. Proprietary and Confidential Information

12.1 Proprietary and Confidential Information. It may be necessary for BellSouth and KMC III, each as the "Discloser," to provide to the other Party, as "Recipient," certain proprietary and confidential information (including trade secret information) including but not limited to technical, financial, marketing, staffing and business plans and information, strategic information, proposals, request for proposals, specifications, drawings, maps, prices, costs, costing methodologies, procedures, processes, business systems, software programs, techniques, customer account data, call detail records and like information (collectively the "Information"). All such Information conveyed in writing or other tangible form shall be clearly marked with a confidential or proprietary legend. Information conveyed orally by the Discloser to Recipient shall be designated as proprietary and confidential at the time of such oral conveyance, shall be reduced to writing by the Discloser within forty-five (45) days thereafter, and shall be clearly marked with a confidential or proprietary legend.

12.1.1 Each Party shall have the right to correct an inadvertent failure to identify information as Confidential Information by giving written notification within forty-five (45) days after the information is disclosed. The Recipient shall, from that time forward, treat such information as Confidential Information subject to the provisions of this Section 12.

12.2 Use and Protection of Information. Recipient agrees to protect such Information of the Discloser provided to Recipient from whatever source from distribution, disclosure or dissemination to anyone except employees of Recipient with a need to know such Information solely in conjunction with Recipient's analysis of the Information and for no other purpose except as authorized herein or as otherwise authorized in writing by the Discloser. Recipient will not make any of any kind of the Information inspected by it. The Recipient will use the same standard of care to protect Information received, as they would use to protect their own confidential and proprietary Information. Upon request the Information will be returned by the Recipient to the Discloser within thirty (30) days of completion of any use.

12.3 Exceptions. Recipient will not have an obligation to protect any portion of the Information which:

12.3.1 (a) is made publicly available by the Discloser or lawfully by a nonparty to this Agreement; (b) is lawfully obtained by Recipient from any source other than Discloser; (c) is previously known to Recipient without an obligation to keep it confidential; or (d) is released from the terms of this Agreement by Discloser upon written notice to Recipient.

12.4 Recipient agrees to use the Information solely for the purposes of negotiations pursuant to 47 U.S.C. § 251 or in performing its obligations under this Agreement and for no other entity or purpose, except as may be otherwise agreed to in writing by the Parties. Nothing herein shall prohibit Recipient from providing information requested by the FCC or a state regulatory agency with jurisdiction over this

matter, or to support a request for arbitration or an allegation of failure to negotiate in good faith.

12.5 Recipient agrees not to publish or use the Information for any advertising, sales or marketing promotions, press releases, or publicity matters that refer either directly or indirectly to the Information or to the Discloser or any of its affiliated companies.

12.6 The disclosure of Information neither grants nor implies any license to the Recipient under any trademark, patent, copyright, application or other intellectual property right that is now or may hereafter be owned by the Discloser.

12.7 Survival of Confidentiality Obligations. The Parties' rights and obligations under this Section 12 shall survive and continue in effect until two (2) years after the expiration or termination date of this Agreement with regard to all Information exchanged during the term of this Agreement. Thereafter, the Parties' rights and obligations hereunder survive and continue in effect with respect to any Information that is a trade secret under applicable law.

13. Resolution of Disputes

13.1 Except for procedures that outline the resolution of billing disputes which are set forth in Section 2 of Attachment 7 or as otherwise set forth in this Agreement, each Party agrees to notify the other Party in writing of a dispute concerning this Agreement. If the Parties are unable to resolve the issues relating to the dispute in the normal course of business then either Party shall file a complaint with the Commission or FCC to resolve such issues or, as explicitly otherwise provided for in this Agreement, may proceed with any other remedy pursuant to law or equity as provided for in this Section 13.

13.2 Except as otherwise stated in this Agreement, or for such matters which lie outside the jurisdiction or expertise of the Commission or FCC, if any dispute arises as to the enforcement of terms and conditions of this Agreement, and/or as to the interpretation of any provision of this Agreement, the aggrieved Party, to the extent seeking resolution of such dispute, must seek such resolution before the Commission or FCC in accordance with the Act. Each Party reserves any rights it may have to seek judicial review of any ruling made by the Commission or FCC concerning this Agreement. Either Party may seek expedited resolution by the Commission or FCC. Until the dispute is finally resolved, each Party shall continue to perform its obligations under this Agreement**,** unless the issue as to how or whether there is an obligation to perform is the basis of the dispute, and shall continue to provide all services and payments as prior to the dispute provided however, that neither Party shall be required to act in any unlawful fashion**.**

13.3 Except to the extent the Commission or FCC is authorized to grant temporary equitable relief with respect to a dispute arising as to the enforcement of terms and conditions of this Agreement, and/or as to the interpretation of any provision of this Agreement, this Section 13 shall not prevent either Party from seeking any

temporary equitable relief, including a temporary restraining order, in a court of competent jurisdiction.

13.4 In addition to Sections 13.1 and 13.2 above, each Party shall have the right to seek legal and equitable remedies on any and all legal and equitable theories in any court of competent jurisdiction for any and all claims, causes of action, or other proceedings not arising: (i) as to the enforcement of any provision of this Agreement, or (ii) as to the enforcement or interpretation under applicable federal or state telecommunications law. Moreover, if the Commission or FCC would not have authority to grant an award of damages after issuing a ruling finding fault or liability in connection with a dispute under this Agreement, either Party may pursue such award in any court of competent jurisdiction after such Commission or FCC finding.

14. Taxes

14.1 Definition. For purposes of this Section, the terms "taxes" and "fees" shall include but not be limited to federal, state or local sales, use, excise, gross receipts or other taxes or tax-like fees of whatever nature and however designated (including tariff surcharges and any fees, charges or other payments, contractual or otherwise, for the use of public streets or rights of way, whether designated as franchise fees or otherwise) imposed, or sought to be imposed, on or with respect to the services furnished hereunder or measured by the charges or payments therefore, excluding any taxes levied on income.

14.2 Taxes and Fees Imposed Directly On Either Providing Party or Purchasing Party.

14.2.1 Taxes and fees imposed on the providing Party, which are not permitted or required to be passed on by the providing Party to its customer or Customer, shall be borne and paid by the providing Party.

14.2.2 Taxes and fees imposed on the purchasing Party, which are not required to be collected and/or remitted by the providing Party, shall be borne and paid by the purchasing Party.

14.3 Taxes and Fees Imposed on Purchasing Party But Collected And Remitted By Providing Party.

14.3.1 Taxes and fees imposed on the purchasing Party shall be borne by the purchasing Party, even if the obligation to collect and/or remit such taxes or fees is placed on the providing Party.

14.3.2 To the extent permitted by applicable law, any such taxes and/or fees shall be shown as separate items on applicable billing documents between the Parties. Notwithstanding the foregoing, the purchasing Party shall remain liable for any such taxes and fees regardless of whether they are actually billed by the providing Party at the time that the respective service is billed.

14.3.3 If the purchasing Party determines that in its opinion any such taxes or fees are not payable, the providing Party shall not bill such taxes or fees to the purchasing Party if the purchasing Party provides written certification, reasonably satisfactory to the providing Party, stating that it is exempt or otherwise not subject to the tax or fee, setting forth the basis therefor, and satisfying any other requirements under applicable law. If any authority seeks to collect any such tax or fee that the purchasing Party has determined and certified not to be payable, or any such tax or fee that was not billed by the providing Party, the purchasing Party may contest the same in good faith, at its own expense. In any such contest, the purchasing Party shall promptly furnish the providing Party with copies of all filings in any proceeding, protest, or legal challenge, all rulings issued in connection therewith, and all correspondence between the purchasing Party and the taxing authority.

14.3.4 In the event that all or any portion of an amount sought to be collected must be paid in order to contest the imposition of any such tax or fee, or to avoid the existence of a lien on the assets of the providing Party during the pendency of such contest, the purchasing Party shall be responsible for such payment and shall be entitled to the benefit of any refund or recovery.

14.3.5 If it is ultimately determined that any additional amount of such a tax or fee is due to the imposing authority, the purchasing Party shall pay such additional amount, including any interest and penalties thereon.

14.3.6 Notwithstanding any provision to the contrary, the purchasing Party shall protect, indemnify and hold harmless (and defend at the purchasing Party's expense) the providing Party from and against any such tax or fee, interest or penalties thereon, or other charges or payable expenses (including reasonable attorney fees) with respect thereto, which are incurred by the providing Party in connection with any claim for or contest of any such tax or fee.

14.3.7 Each Party shall notify the other Party in writing of any assessment, proposed assessment or other claim for any additional amount of such a tax or fee by a taxing authority; such notice to be provided, if possible, at least ten (10) days prior to the date by which a response, protest or other appeal must be filed, but in no event later than thirty (30) days after receipt of such assessment, proposed assessment or claim.

14.4 <u>Taxes and Fees Imposed on Providing Party But Passed On To Purchasing Party.</u>

14.4.1 Taxes and fees imposed on the providing Party, which are permitted or required to be passed on by the providing Party to its customer or Customer, shall be borne by the purchasing Party.

14.4.2 To the extent permitted by applicable law, any such taxes and/or fees shall be shown as separate items on applicable billing documents between the Parties. Notwithstanding the foregoing, the purchasing Party shall remain liable for any such taxes and fees regardless of whether they are actually billed by the providing

Party at the time that the respective service is billed. The Parties agree to use good faith efforts to bill taxes promptly.

14.4.3 If the purchasing Party disagrees with the providing Party's determination as to the application or basis for any such tax or fee, the Parties shall consult with respect to the imposition and billing of such tax or fee. Notwithstanding the foregoing, the providing Party shall retain ultimate responsibility for determining whether and to what extent any such taxes or fees are applicable, and the purchasing Party shall abide by such determination and pay such taxes or fees to the providing Party. The purchasing Party shall retain the right to contest, or to have the providing Party contest on its behalf, the imposition of such taxes and fees; provided however, that any such contest undertaken by or at the request of the purchasing Party shall be at the purchasing Party's expense.

14.4.4 In the event that all or any portion of an amount sought to be collected must be paid in order to contest the imposition of any such tax or fee, or to avoid the existence of a lien on the assets of the providing Party during the pendency of such contest, the purchasing Party shall be responsible for such payment and shall be entitled to the benefit of any refund or recovery.

14.4.5 If it is ultimately determined that any additional amount of such a tax or fee is due to the imposing authority, the purchasing Party shall pay such additional amount, including any interest and penalties thereon.

14.4.6 Notwithstanding any provision to the contrary, the purchasing Party shall protect, indemnify and hold harmless (and defend at the purchasing Party's expense) the providing Party from and against any such tax or fee, interest or penalties thereon, or other reasonable charges or payable expenses (including reasonable attorneys' fees) with respect thereto, which are incurred by the providing Party in connection with any claim for or contest of any such tax or fee.

14.4.7 Each Party shall notify the other Party in writing of any assessment, proposed assessment or other claim for any additional amount of such a tax or fee by a taxing authority; such notice to be provided, if possible, at least ten (10) days prior to the date by which a response, protest or other appeal must be filed, but in no event later than thirty (30) days after receipt of such assessment, proposed assessment or claim.

14.5 Mutual Cooperation. In any contest of a tax or fee by one Party, the other Party shall cooperate fully by providing records, testimony and such additional information or assistance as may reasonably be necessary to pursue the contest. Further, the other Party shall be reimbursed for any reasonable and necessary out-of-pocket copying and travel expenses incurred in assisting in such contest.

15. Network Maintenance and Management

15.1 The Parties shall work cooperatively to implement this Agreement. The Parties shall exchange appropriate information (e.g., maintenance contact numbers,

network information, information required to comply with law enforcement and other security agencies of the Government, etc.) as reasonably required to implement and perform this Agreement.

15.2 Each Party hereto shall design, maintain and operate their respective networks as necessary to ensure that the other Party hereto receives service quality which is consistent with generally accepted industry standards at least at parity with the network service quality given to itself, its Affiliates, its customers or any other Telecommunications Carrier.

15.3 BellSouth agrees to provide KMC III prior notice consistent with applicable FCC rules and the Act of changes in information or technical specifications necessary for the transmission and routing of services using BellSouth's facilities or networks, as well as other changes that affect the interoperability of those respective facilities and networks.

16. **Force Majeure**

16.1 In the event performance of this Agreement, or any obligation hereunder, is either directly or indirectly prevented, restricted, or interfered with by reason of fire, flood, earthquake or like acts of God, wars, revolution, civil commotion, explosion, acts of public enemy, embargo, acts of the government in its sovereign capacity, labor difficulties, including without limitation, strikes, slowdowns, picketing, or boycotts, unavailability of equipment from vendor, changes requested by KMC III, or any other circumstances beyond the reasonable control and without the fault or negligence of the Party affected, the Party affected, upon giving prompt notice to the other Party, shall be excused from such performance on a day-to-day basis to the extent of such prevention, restriction, or interference (and the other Party shall likewise be excused from performance of its obligations on a day-to-day basis until the delay, restriction or interference has ceased); provided, however, that the Party so affected shall use diligent efforts to avoid or remove such causes of non-performance and both Parties shall proceed whenever such causes are removed or cease.

17. **Modification of Agreement**

17.1 BellSouth shall make agreements available to KMC III in accordance with 47 USC § 252(i) and 47 C.F.R. § 51.809.

17.2 If KMC III changes its name or makes changes to its company structure that affects the identity of KMC IIIdue to a merger, acquisition, transfer or any other reason, it is the responsibility of KMC III to notify BellSouth of said change and request that an amendment to this Agreement, if necessary, be executed to reflect said change.

17.3 No modification, amendment, supplement to, or waiver of the Agreement or any of its provisions shall be effective and binding upon the Parties unless it is made in writing and duly signed by the Parties.

17.4 In the event that any (1) effective legislative, regulatory, judicial or other legal action or (2) obligation or commitment regarding interconnection, resale or access to network elements which obligation or commitment expressly applies generically to all CLECs made by BellSouth to any state or federal regulatory authority or the U.S. Department of Justice (Governmental Body) in connection with any merger or regulatory proceeding regarding BellSouth's obligations under the Act,) materially affects any material terms of this Agreement, or the ability of KMC III or BellSouth to perform any material terms of this Agreement, KMC III or BellSouth may, on thirty (30) days' written notice, require that such terms be renegotiated, and the Parties shall renegotiate in good faith such mutually acceptable new terms as may be required. In the event that such new terms are not renegotiated within forty-five (45) days after such notice, the Dispute may at any time thereafter be resolved in accordance with the Dispute Resolution procedure set forth in this Agreement.

18. **Non-Waiver of Legal Rights**

18.1 Execution of this Agreement by either Party does not confirm or imply that the executing Party agrees with any decision(s) issued pursuant to the Telecommunications Act of 1996. Neither Party waives its rights to appeal or otherwise challenge any such decision(s) and each Party reserves all of its rights to pursue any and all legal and/or equitable remedies, including appeals of any such decision(s).

19. **One Agreement**

19.1 Subject to the provisions of Sections 17 and 20, the Parties acknowledge that they negotiated this Agreement as a single contract and do not consider the separate Attachments of this Agreement to be separate contracts. Each Attachment contains provisions that are subject to the provisions of the General Terms and Conditions; application of some provisions may require or trigger application of provisions in other Attachments hereto.

20. **Severability**

20.1 If any provision of this Agreement, or part thereof, shall be held to be invalid or unenforceable in any respect, such invalidity or unenforceability shall not invalidate the entire Agreement, unless such construction would be unreasonable. The Agreement shall be construed as if it did not contain the invalid or unenforceable provision or provisions, and the rights and obligations of each Party shall be construed and enforced accordingly. Provided, however, that in the event such invalid or unenforceable provision or provisions are essential elements of this Agreement and substantially impair the rights or obligations of either Party, the Parties shall promptly negotiate a replacement provision or provisions. In the event the Parties are unable to mutually negotiate such replacement language, either Party may elect to pursue the dispute resolution process set forth in Section 13 above.

21. **No Waiver**

21.1 A failure or delay of either Party to enforce any of the provisions hereof, to exercise any option which is herein provided, or to require performance of any of the provisions hereof shall in no way be construed to be a waiver of such provisions or options, and each Party, notwithstanding such failure, shall have the right thereafter to insist upon the performance of any and all of the provisions of this Agreement.

22. **Governing Law**

22.1 Where applicable, this Agreement shall be governed by and construed in accordance with federal and state substantive telecommunications law, including rules and regulations of the FCC and appropriate Commission. In all other respects, this Agreement shall be governed by and construed and enforced in accordance with the laws of the State of Georgia without regard to its conflict of laws principles.

23. **Assignments**

23.1 Except as provided herein, any assignment by either Party to any non-affiliated entity of any right, obligation or duty, or of any other interest hereunder, in whole or in part, without the prior written consent of the other Party shall be void. A Party may assign this Agreement or any right, obligation, duty or other interest hereunder to an Affiliate of the Party or to an entity purchasing all or substantially all of the Party's assets without the consent of the other Party; provided, however, that the assigning Party shall notify the other Party in writing of such assignment thirty (30) days prior to the Effective Date thereof and, provided further, if the assignee is an assignee of KMC III, the assignee must provide evidence of Commission CLEC certification. The Parties shall amend this Agreement to reflect such assignments and shall work cooperatively to implement any changes required due to such assignment. All obligations and duties of any Party under this Agreement shall be binding on all successors in interest and assigns of such Party. No assignment or delegation hereof shall relieve the assignor of its obligations under this Agreement in the event that the assignee fails to perform such obligations. Notwithstanding anything to the contrary in this Section and unless the Parties agree otherwise, KMC III shall not assign this Agreement to any Affiliate or non-affiliated entity unless either (1) KMC III pays all bills, past due and current, under this Agreement, or (2) KMC III's assignee expressly assumes liability for payment of such bills.

24. **Notices**

24.1 Every notice, consent, approval, or other communications required or contemplated by this Agreement shall be in writing and shall be delivered by hand, by overnight courier or by U.S. Mail postage prepaid, addressed to:

BellSouth Telecommunications, Inc.

BellSouth Local Contract Manager
600 North 19th Street, 8th floor
Birmingham, Alabama 35203

and

ICS Attorney
Suite 4300
675 W. Peachtree St.
Atlanta, GA 30375

KMC Telecom III, LLC

Marva Johnson
Senior Regulatory Counsel
1755 North Brown Road, 3rd Floor
Lawrenceville, GA 30043

24.2 Unless otherwise provided in this Agreement, notice by mail shall be effective on the date it is officially recorded as delivered by return receipt or equivalent, and in the absence of such record of delivery, it shall be presumed to have been delivered the fifth (5th) day, or next business day after the fifth (5th) day, after it was deposited in the mail. Notice by overnight courier shall be effective on the date it was delivered, except that notice delivered on a non-business day shall be deemed effective on the next business day.

24.3 Subject to Section 45.2 below, BellSouth will post changes to business processes and policies, notices of new service offerings, and changes to service offerings not requiring an amendment to this Agreement, notices required to be posted to BellSouth's web site, and any other information of general applicability to KMC III.

25. **Rule of Construction**

25.1 No rule of construction requiring interpretation against the drafting Party hereof shall apply in the interpretation of this Agreement.

26. **Headings of No Force or Effect**

26.1 The headings of Articles and Sections of this Agreement are for convenience of reference only, and shall in no way define, modify or restrict the meaning or interpretation of the terms or provisions of this Agreement.

27. **Cooperation in Preventing Customer Fraud**

27.1 The Parties agree to cooperate fully with one another to investigate, minimize, prevent and take action in cases of fraud by a customer involving the provision of services to KMC III under this Agreement**.**

28. **Revenue Protection**

28.1 BellSouth shall make available to KMC III fraud prevention or revenue protection features, including prevention, detection, or control functionality embedded within any of the Network Elements or services provided pursuant to this Agreement. These features include switch functions such as screening codes and call blocking of international, 900 and 976 numbers. To the extent separate charges apply for such features, the charges will be set forth in the appropriate attachment to this Agreement or will be negotiated between the Parties and added to this Agreement via an amendment at such time as KMC III requests the features.

29. **Law Enforcement Interface**

29.1 Both Parties shall work cooperatively to comply with all legal or regulatory requirements related to number recording devices, including, for example, orders related to trap and trace and wire taps.

30. **Multiple Counterparts**

30.1 This Agreement may be executed in multiple counterparts, each of which shall be deemed an original, but all of which shall together constitute but one and the same document.

31. **Filing of Agreement**

31.1 Upon execution of this Agreement BellSouth shall file the Agreement with the appropriate state regulatory agency pursuant to the requirements of Section 252 of the Act. Notwithstanding the foregoing, this Agreement shall not be submitted for approval by the appropriate state regulatory agency unless and until such time as KMC III is duly certified as a local exchange carrier in such state, except as otherwise required by a Commission.

32. **Compliance with Applicable Law**

32.1 Each Party shall comply at its own expense with all applicable federal, state, and local statutes, laws, rules, regulations, codes, effective orders, injunctions, judgments and binding decisions, awards and decrees that relate to its obligations under this Agreement (Applicable Law).

32.2 This Agreement is intended to memorialize the Parties' mutual agreement with respect to their obligations under the Act and applicable FCC and Commission rules and orders. To the extent that either Party asserts that an obligation, right or other requirement, not expressly memorialized herein, is applicable under this Agreement by virtue of a reference to an FCC or Commission rule or order or,

with respect to substantive Telecommunications law only, Applicable Law, and such obligation, right or other requirement is disputed by the other Party, the Party asserting that such obligation, right or other requirement is applicable shall petition the Commission for resolution of the dispute and the Parties agree that any finding by the Commission that such obligation, right or other requirement exists shall be applied prospectively by the Parties upon amendment of the Agreement to include such obligation, right or other requirement and any necessary rates, terms and conditions, and the Party that failed to perform such obligation, right or other requirement shall be held harmless from any liability for such failure until the obligation, right or other requirement is expressly included in this Agreement by amendment hereto.

32.3 Where a Commission has adopted rates for network elements or services provided under this Agreement, as of the Effective Date, it is the intent of the Parties that the rate exhibits incorporated into this Agreement will be those rates, unless otherwise negotiated by the Parties. Upon request of either Party, errors in rate sheets will be corrected up to ninety (90) days retroactively, and prospectively, by amendment to this Agreement. This section shall not affect either Party's rights pursuant to Section 1.1.3 of Attachment 7 of this Agreement for charges other than those for which there is an error in the rates sheets.

33. Necessary Approvals

33.1 Each Party shall be responsible for obtaining and keeping in effect all approvals from, and rights granted by, governmental authorities, building and property owners, other carriers, and any other persons that may be required in connection with the performance of its obligations under this Agreement. Each Party shall reasonably cooperate with the other Party in obtaining and maintaining any required approvals and rights for which such Party is responsible.

34. Good Faith Performance

34.1 Each Party shall act in good faith in its performance under this Agreement. Where notice, approval, consent, agreement or similar action by a Party is permitted or required by any provision of this Agreement (including without limitation, the obligation of the Parties to further negotiate the resolution of new or open issues under this Agreement), such action will not be unreasonably delayed, withheld or conditioned.

35. Independent Contracting Parties

35.1 Each Party is an independent contractor, and has and hereby retains the right to exercise full control of and supervision over its own performance of its obligations under this Agreement, and retains full control over the employment, direction, compensation and discharge of its employees assisting in the performance of such obligations. Each Party shall be solely responsible for all matters relating to payment of such employees, including compliance with social security taxes, withholding taxes and all other regulations governing such matters. Subject to the

limitations on liability and except as otherwise provided in this Agreement, each Party shall be responsible for (i) its own acts and performance of all obligations imposed by Applicable Law in connection with its activities, legal status and property, real or personal and, (ii) the acts of its own Affiliates, employees, agents and contractors during the performance of the Party's obligations hereunder.

36. **Subcontracting**

36.1 If any obligation is performed through a subcontractor, each Party shall remain fully responsible for the performance of this Agreement in accordance with its terms, including any obligations either Party performs through subcontractors, and each Party shall be solely responsible for payments due the Party's subcontractors. No contract, subcontract or other Agreement entered into by either Party with any third party in connection with the provision of any facilities or services provided herein, shall provide for any indemnity, guarantee or assumption of liability by, or other obligation of, the other Party to this Agreement with respect to such arrangement, except as consented to in writing by the other Party. No subcontractor shall be deemed a third party beneficiary for any purposes under this Agreement. Any subcontractor who gains access to CPNI or Confidential Information covered by this Agreement shall be required by the subcontracting Party to protect such CPNI or Confidential Information to the same extent that the subcontracting Party is required to protect the same under the terms of this Agreement.

37. **Labor Relations**

37.1 The Parties shall endeavor to minimize impairment of service to the other Party in the event of a labor dispute to the extent permitted by Applicable Law.

38. **Compliance with the Communications Assistance for Law Enforcement Act of 1994 (CALEA)**

38.1 Each Party represents and warrants that any equipment, facilities or services provided to the other Party under this Agreement comply with CALEA. Each Party shall indemnify and hold the other Party harmless from any and all penalties imposed upon the other Party for such other Party's noncompliance.

39. **Customer Inquiries**

39.1 Calls About the Other Party's Products and Services. Each Party shall refer all questions regarding the other Party's services or products directly to the other Party at a telephone number specified by the other Party. Each Party shall ensure that all their representatives who receive inquiries regarding the other Party's services or products: (i) provide such numbers, if available to the personnel receiving the call, to callers who inquire about the other Party's services or products; (ii) do not in any way disparage or discriminate against the other Party, or its products or services; and (iii) do not provide information about their products or services during that same inquiry/subscriber contact, unless that

information specifically is requested by the caller. Subject to the limitations of this Section, both Parties maintain the right to serve directly any customer within the service area of the other Party. Both Parties may directly market their own telecommunications products and services and in doing so may establish independent relationships with customers of the other Party.

40. **Additional Fair Competition Requirements**

40.1 In the event that BellSouth transfers facilities or other assets to an Affiliate during the term of this Agreement, which are necessary in order for BellSouth to comply with its obligations under this Agreement, and BellSouth is required by law to continue to provide such interconnection, services or network elements under this Agreement even after such transfer, then such obligations hereunder shall survive and BellSouth shall continue to perform such obligations. In the event that BellSouth transfers facilities or other assets to an Affiliate during the term of this Agreement, which are necessary in order for BellSouth to comply with its obligations under this Agreement, and BellSouth is relieved of its obligations to provide such interconnection, services or network elements, but such Affiliate is required by law to perform such obligations to the extent that BellSouth was required to, then BellSouth shall be relieved of its obligations hereunder and such obligations shall survive and transfer to such Affiliate pursuant to the Assignment Section hereof.

40.2 BellSouth shall allow KMC III's local exchange customer to select BellSouth for the provision of intraLATA toll services to the extent BellSouth makes such stand alone intraLATA services available to the general public on a nondiscriminatory basis.

40.3 Each Party shall protect the confidentiality of proprietary information of, and relating to, the other Party and its customers or any other carrier. If either Party receives or obtains proprietary information from the other for the purposes of providing services under this agreement, such Party shall use such information only for such purpose and shall not use such information for its own marketing purpose.

41. **Posting of Agreements**

41.1 BellSouth shall post on its Web site any BellSouth interconnection agreement between BellSouth and any third party no later than ten (10) days after the approval of such agreement with the Commission.

42. **Nonexclusive Dealings**

42.1 This Agreement does not prevent either Party from providing or purchasing services to or from any other person.

43. **Rate True-Up**

43.1 This Section applies to Network Interconnection and/or Unbundled Network Elements and Other Services rates that are expressly subject to true-up under this Agreement.

43.2 The designated true-up rates shall be trued-up, either up or down, based on final prices determined either by further agreement between the Parties, or by a final order of the Commission. The Parties shall implement the true-up by comparing the actual volumes and demand for each item, together with the designated true-up rates for each item, with the final prices determined for each item. Each Party shall keep its own records upon which the true-up can be based, and any final payment from one Party to the other shall be in an amount agreed upon by the Parties based on such records. In the event of any disagreement as between the records or the Parties regarding the amount of such true-up, the Parties shall submit the matter to the Dispute Resolution process in accordance with the provisions of Section 13 above of the General Terms and Conditions of this Agreement.

44. **Survival**

44.1 In no event shall the expiration or termination for any reason of this Agreement relieve either Party of any liability or obligation accruing in favor of the other Party in respect of acts or omissions occurring prior thereto. Any liabilities and all obligations of each Party under the provisions regarding indemnification, confidentiality of information, liability, and any other provisions of this Agreement that by their specific nature or express terms are contemplated to survive (or be performed) thereafter shall survive expiration or termination.

45. **Entire Agreement**

45.1 This Agreement means the General Terms and Conditions, the Attachments identified in Section 45.4 below, and subject to the limitations set forth in Section 45.2 all documents identified herein. This Agreement sets forth the entire understanding and supersedes prior agreements between the Parties relating to the subject matter contained in this Agreement and merges all prior discussions between them. Any orders placed under prior agreements between the Parties shall be governed by the terms of this Agreement. Any and all amounts and obligations owed for services provisioned or orders placed under prior agreements between the Parties, related to the subject matter hereof, shall be due and owing under this Agreement and be governed by the terms and conditions of this Agreement as if such services or orders were provisioned or placed under this Agreement. Neither Party shall be bound by any definition, condition, provision, representation, warranty, covenant or promise other than as expressly stated in this Agreement or as is contemporaneously or subsequently set forth in writing and executed by a duly authorized officer or representative of the Party to be bound thereby.

45.2 **Guides**

45.2.1 The Parties acknowledge that certain provisions of this Agreement reference certain BellSouth documents and publications (collectively referred to herein as the "Guides"). All Guides referred to in this Agreement, are incorporated herein and made a part hereof by reference. To the extent that there is a conflict between a provision of a Guide and a provision of this Agreement, the provision of this Agreement shall prevail. BellSouth may, from time to time during the term hereof, change or alter said Guides (including replacing a Guide entirely with a successor Guide with a different name). The Parties agree that if the change or alteration was made to BellSouth's OSS interface Guides as a result of the Change Control Process (CCP), results from a revision to a generally accepted and implemented industry standard or guideline (e.g. Ordering Billing Forum (OBF), Telcordia guidelines, etc.), or other legal requirement directly affecting the Guides provided, if such legal requirement would be subject to the change of law provision in these General Terms and Conditions, the change to the Guide would not be applicable until this Agreement is amended to reflect the update to the Guide, or if KMC III agrees to such change or alteration, any such change or alteration shall become effective as specified in the terms of the notice to KMC III via the applicable Internet website posting. In all other cases, a change in a Guide which (1) alters, amends or conflicts with any term of this Agreement; (2) changes any charge or rate, or the application of any charge or rate, specified in this Agreement; (3) adds a new rate or rate element not previously specified in the Agreement; (4) causes KMC III to incur material cost or expense to implement the change or alteration; or (5) increases an interval set forth in this agreement, will not be effective with respect to KMC III until BellSouth and KMC III sign an amendment to this Agreement reflecting the changes described in items (1), (2), (3) or (5); or unless KMC III fails to inform BellSouth in writing that it does not agree to such change or alteration within forty-five (45) days of notice of such change being given to KMC III for item (4). For purposes of item (4), a cost or expense shall be deemed material if it imposes a financial burden on KMC III, but shall not include costs associated with disseminating notice of the change or providing training regarding the change to employees. In addition, BellSouth will use its best efforts, upon KMC III's request to BellSouth's Interconnection Services (ICS) Web site group at wmag@bellsouth.com, to provide such notices via e-mail to the address specified by KMC III.

In the event that the Parties disagree as to whether any alteration or amendment described in this Section is effective as to KMC III pursuant to the requirements of this Section, either Party may, at its option, seek resolution of the dispute in accordance with the Dispute Resolution provisions in the General Terms and Conditions of this Agreement. In cases where there is a dispute with respect to any alteration or amendment described in this Section becoming effective as to KMC III, such alteration or amendment described in this Section shall not become effective as to KMC III until there is mutual agreement between the Parties that it should become effective or an order resulting from the Dispute Resolution process finding in favor of its becoming effective.

45.3 In various provisions of this Agreement, the Parties have included references to tariffs filed by the Parties. If such tariff is referenced for the purposes of a service that is provisioned pursuant to such tariff, and there is a conflict between such referenced tariff provisions and this Agreement, the terms of the tariff shall control. If the service is provisioned pursuant to this Agreement but the tariff is referenced for a rate, an interval or another purpose, to the extent that there is a conflict between such referenced tariff provision and this Agreement, and except as otherwise set forth in this Agreement, the terms of this Agreement shall prevail.

45.4 This Agreement includes eleven (11) Attachments with provisions for the following:

Resale
Network Elements and Other Services
Network Interconnection
Collocation
Access to Numbers and Number Portability
Pre-Ordering, Ordering, Provisioning, Maintenance and Repair
Billing
Rights-of-Way, Conduits and Pole Attachments
Performance Measurements
BellSouth Disaster Recovery Plan
Bona Fide Request/New Business Request Process

45.5 The following services are included as options for purchase by KMC III pursuant to the terms and conditions set forth in this Agreement. KMC III may elect to purchase said services by written request to its Local Contract Manager if applicable:

Optional Daily Usage File (ODUF)
Enhanced Optional Daily Usage File (EODUF)
Access Daily Usage File (ADUF)
Line Information Database (LIDB) Storage
Centralized Message Distribution Service (CMDS)
Calling Name (CNAM)
LNP Data Base Query Service

IN WITNESS WHEREOF, the Parties have executed this Agreement the day and year written below.

BellSouth Telecommunications, Inc.

By: Kristen E. Rowe

Name: Kristen E. Rowe

Title: Director

Date: 7/5/05

KMC Telecom III, LLC

By: Marva Brown Johnson

Name: Marva Brown Johnson

Title: Vice President and Senior Counsel

Date: 7/1/2005

Attachment 1

Resale

Table of Contents

1. Discount Rates 3

2. Definition of Terms 3

3. General Provisions 3

4. BellSouth's Provision of Services to KMC III for Resale 7

5. Maintenance of Services 11

6. Establishment of Account 12

7 Establishment of Service 12

8. Discontinuance of Service to Customers 12

9. Discontinuance of Service to KMC III 13

10. Operator Services (Operator Call Processing and Directory Assistance) 13

11. Line Information Database (LIDB) 17

12. RAO Hosting 17

13. Optional Daily Usage File (ODUF) 17

14. Enhanced Optional Daily Usage File (EODUF) 17

Resale Restrictions **Exhibit A**

Line Information Database (LIDB) Storage Agreemt **Exhibit B**

Optional Daily Usage File (ODUF) **Exhibit C**

Enhanced Option Daily Usage File (EODUF) **Exhibit D**

Resale Discounts and Rates **Exhibit E**

RESALE

1. Discount Rates

1.1 The Commission-approved discount rates applied to KMC III purchases of BellSouth Telecommunications Services for the purpose of resale shall be as set forth in Exhibit E. Such discounts have been determined by the applicable Commission to reflect the costs avoided by BellSouth when selling a service for wholesale purposes.

1.2 The telecommunications services available for purchase by KMC III for the purposes of resale to KMC III's customers shall be available at BellSouth's tariffed rates less the discount set forth in Exhibit E to this Agreement and subject to the exclusions and limitations set forth in Exhibit A to this Agreement.

2. Definition of Terms

2.1 CUSTOMER OF RECORD means the entity responsible for placing application for service; requesting additions, rearrangements, maintenance or discontinuance of service; payment in full of charges incurred such as nonrecurring, monthly recurring, toll, directory assistance, etc.

2.2 RESALE means an activity wherein a certificated CLEC, such as KMC III, subscribes to the telecommunications services of BellSouth and then offers those telecommunications services to the public.

3. General Provisions

3.1 All of the negotiated rates, terms and conditions set forth in this Attachment pertain to the resale of BellSouth's retail telecommunications services and other services specified in this Attachment. BellSouth shall make available to KMC III for resale those telecommunications services that BellSouth is required to offer for resale pursuant to the 1996 Act and applicable FCC and Commission rules and orders. BellSouth currently makes such services available pursuant to its General Subscriber Services Tariff (GSST) and Private Line Services Tariff.

3.1.1 When KMC III provides Resale service in a cross boundary area (areas that are part of the local serving area of another state's exchange) the rates, regulations and discounts for the tariffing state will apply. Billing will be from the serving state.

3.1.2 In Tennessee, if KMC III does not resell Lifeline service to any end users, and if KMC III agrees to order an appropriate Operator Services/Directory Assistance block as set forth in BellSouth's General Subscriber Services Tariff, the discount shall be 21.56%.

3.1.2.1 In the event KMC III resells Lifeline service to any end user in Tennessee, BellSouth will begin applying the 16% discount rate to all services. Upon KMC III and BellSouth's implementation of a billing arrangement whereby a separate Master Account (Q-account) associated with a separate Operating Customer Number (OCN) is established for billing of Lifeline service end users, the discount shall be applied as set forth in 3.1.2 preceding for the non-Lifeline affected Master Account (Q-account).

3.1.2.2 KMC III must provide written notification to BellSouth within thirty (30) days prior to either providing its own operator services/ directory services or orders the appropriate operator services/directory assistance blocking, to qualify for the higher discount rate of 21.56%.

3.2 KMC III may purchase resale services from BellSouth for its own use in operating its business. The resale discount will apply to those services under the following conditions:

3.2.1 KMC III must resell services to other customers.

3.2.2 KMC III cannot be a CLEC for the single purpose of selling to itself.

3.3 KMC III will be the customer of record for all services purchased from BellSouth. Except as specified herein, BellSouth will take orders from, bill and receive payment from KMC III for said services.

3.4 BellSouth shall have no contact with the customer except to the extent provided for in this Agreement**.**

3.5 Nothing herein shall affect BellSouth’s rights, consistent with applicable law, to: (i) bill the customer for any services that the customer specifies it wishes to receive directly from BellSouth, (ii) serve directly any customer within the service area of KMC III, or (iii) market directly its own telecommunications products and services and in doing so may establish independent relationships with customers of KMC III consistent with applicable law.

3.5.1 When a customer of KMC III or BellSouth elects to change his/her carrier to the other Party, both Parties agree to release the customer’s service to the other Party concurrent with the due date of the service order, which shall be established based on the reasonable and non discriminatory standard interval for the customer’s requested service as set forth in the BellSouth Product and Services Interval Guide.

3.5.2 BellSouth and KMC III will refrain from contacting a customer who has placed or whose selected carrier has placed on the customer's behalf an order to change the customer's service provider from BellSouth or KMC III to the other Party until such time that the order for service has been completed. The Parties agree to

comply with any applicable FCC and Commission rules and orders with respect to contacting customers who have elected to change telecommunications carriers.

3.6 Neither Party nor the customer has a property right to the telephone number or any other call number designation associated with services furnished by BellSouth, and no right to the continuance of service through any particular central office. The customer to whom a telephone number associated with services furnished by BellSouth has been assigned has the right to continue using the telephone number to receive those services unless BellSouth is required to change the telephone number in connection with the implementation of area code relief in the form of a geographic split and/or NXX change, in which case BellSouth shall have the right to change the telephone numbers, the central office designation associated with such numbers or both after providing KMC III a period of notice in accordance with the FCC's Notices of Network Change rules. Such number changes shall be done only when BellSouth deems it necessary to do so in the conduct of its business and in accordance with BellSouth practices and procedures on a reasonable and nondiscriminatory basis. Nothing in this Agreement shall affect the ability of a customer to port any telephone number associated with services furnished by BellSouth to a different service provider in accordance with applicable FCC rules and industry guidelines.

3.7. Service is furnished subject to the condition that it will not be used for any unlawful purpose.

3.8. Service will be discontinued if any law enforcement agency advises that the service being used is in violation of the law.

3.9. BellSouth can refuse service in accordance with Section A2.2.9 of its GSST and Section B2.2.2 of its Private Line Services Tariffs.

3.10. BellSouth will cooperate with law enforcement agencies with subpoenas and court orders relating to KMC III's customers, pursuant to Section 6 of the General Terms and Conditions.

3.11. If appropriate KMC III personnel have actual knowledge that one of its customers is utilizing a BellSouth resold telecommunications service in a manner that is not consistent with the terms and conditions of the tariff applicable to such service, KMC III will take corrective action and will discontinue provisioning of such service if not cured within thirty (30) days.

3.12 Facilities and/or equipment utilized by BellSouth to provide service to KMC III remain the property of BellSouth.

3.13 White page directory listings for KMC III customers will be provided in accordance with Section 5 of the General Terms and Conditions.

3.14 <u>Service Ordering and Operational Support Systems (OSS)</u>

3.14.1 KMC III must order services through resale interfaces, i.e., the Local Carrier Service Center (LCSC) and/or appropriate Complex Resale Support Group (CRSG) pursuant to this Agreement. BellSouth has developed and made available the interactive interfaces by which KMC III may submit a Local Service Request (LSR) electronically as set forth in Attachment 2 of this Agreement. Service orders will be in a reasonable standard format designated by BellSouth and will be required on a nondiscriminatory basis.

3.14.2 LSRs submitted by means of one of these interactive interfaces will incur an OSS electronic charge as set forth in Exhibit E to this Attachment 1. An individual LSR will be identified for billing purposes by its Purchase Order Number (PON). LSRs submitted by means other than one of these interactive interfaces (Mail, fax, courier, etc.) will incur a manual order charge as set forth in Exhibit E to this Attachment 1. Supplements or clarifications to a previously billed LSR will not incur an additional OSS charge over and above the original OSS charge.

3.14.3 Denial/Restoral OSS Charge. In the event KMC III provides a list of customers to be denied and restored, rather than an LSR, each location on the list will require a separate PON and therefore will be billed as one LSR per location.

3.14.4 Cancellation OSS Charge. KMC III will incur an OSS charge for an accepted LSR that is later canceled.

3.15 BellSouth shall provide 911/E911 for KMC III customers in the same manner that it is provided to BellSouth customers. BellSouth shall provide and validate KMC III customer information to the Public Service Answering Point (PSAP). BellSouth shall use its service order process to update and maintain, on the same schedule that it uses for its customers, the KMC III customer service information in the ALI/DMS (Automatic Location Identification/Location Information) databases used to support 911/E911 services.

3.16 BellSouth shall bill, and KMC III shall pay, the customer line charge associated with implementing Number Portability as set forth in BellSouth's FCC No. 1 tariff. This charge is not subject to the wholesale discount.

3.17 Pursuant to 47 C.F.R. § 51.617, BellSouth shall bill to KMC III, and KMC III shall pay, the customer common line charges identical to the customer common line charges BellSouth bills its customers.

3.18 New Resale Services/Changes in Provision of Resale Services. BellSouth may provide KMC III notice via Internet posting of price changes and changes to the terms and conditions of services available for resale. BellSouth shall provide notice within the timeframes ordered by the Commission for the provision of notice to CLECs by BellSouth regarding changes to resold services. Where no such Commission requirement exists, BellSouth shall provide notice of discontinuance of resold services and notice of rate increases on resold services ten (10) days prior

to KMC III's obligation to provide notice of discontinuance of resold services and notice of rate increases on resold services to its customers pursuant to Commission rule or order. BellSouth will post on its website changes to business processes and policies, notices of new service offerings, and changes to service offerings not requiring an amendment to this Agreement, notices required to be posted, and any other information of general applicability to CLECs.

4. BellSouth's Provision of Services to KMC III for Resale

4.1 The resale of telecommunications services shall be limited to users and uses conforming to the class of service restrictions.

4.1.1 BellSouth may request relevant documentation related to services purchased by KMC III to verify KMC III's claims for discounts and asserted volumes, if BellSouth has a reasonable basis upon which to suspect that such claims are invalid. Such request shall be made on a nondiscriminatory basis and shall not occur more than once in a twelve (12) month period. KMC III shall maintain sufficient records and data, for a period up to six (6) months, that are relevant and reasonably necessary to determine compliance with tariff provisions regarding such discounts and for verifying asserted volumes to BellSouth. BellSouth shall bear the costs associated with said request if such claims for discounts and volumes are valid. Any information provided by KMC III for purposes of such request shall be deemed Confidential Information pursuant to the General Terms and Conditions of this Agreement.

4.2 Subject to Exhibit A hereto, resold services can only be used in the same manner as specified in BellSouth's Tariffs. Resold services are subject to the same terms and conditions as are specified for such services when furnished to an individual customer of BellSouth in the appropriate section of BellSouth's Tariffs. In accordance with FCC 47 C.F.R. § 51.603, BellSouth will provide services to KMC III for resale that are equal in quality, subject to the same conditions, and provided within the same provisioning time intervals that BellSouth provides these services to others, including customers. Usage allowances (e.g., Business Plus* service) described in BellSouth's tariffs shall not be aggregated for more than one customer or across multiple resold services. Volume discount offerings (e.g., Watsaver® service) may be aggregated by KMC III for multiple customers.

4.3 KMC III may resell services only within the specific service area as defined in its certificate of operation approved by the Commission.

4.4 If KMC III cancels an order for resold services, any costs incurred by BellSouth in conjunction with provisioning of such order will be recovered in accordance with BellSouth's GSST and Private Line Services Tariffs.

4.5 <u>Service Jointly Provisioned with an Independent Company or Competitive Local Exchange Company Areas</u>

4.5.1 BellSouth will in some instances provision resold services in accordance with the GSST and Private Line Tariffs jointly with an Independent Company or other CLEC.

4.5.2 When KMC III assumes responsibility for such service, all terms and conditions defined in the Tariff will apply for services provided within the BellSouth service area only.

4.5.3 Service terminating in an Independent Company (ICO) or other CLEC area will be provisioned and billed by the ICO or other CLEC directly to KMC III.

4.5.4 KMC III must establish a billing arrangement with the ICO or other CLEC prior to assuming a customer account where such circumstances apply.

4.6 Requirements for Specific Services. BellSouth shall make available for resale the services included in this Section 4.6 at the discounts set forth in Exhibit E to this Attachment and in accordance with Exhibit A to this Attachment.

4.6.1 Lifeline and Link-up. BellSouth shall make available Lifeline and Link-up Services for resale in accordance with Commission and FCC rules and regulations and with the reasonable and nondiscriminatory terms and conditions set forth in BellSouth's applicable tariffs. Such services shall be available to KMC III for resale only to those KMC III subscribers who meet the qualifications as set forth in applicable regulations. BellSouth shall indicate with a USOC on the customer service record if an end user is subscribing to Lifeline or Link-up. KMC III shall comply with all aspects of the FCC's and the Commission's orders and rules implementing Lifeline and Link-up programs. To the extent other Voluntary Federal Subscriber Financial Assistance Programs are offered by BellSouth and to the extent BellSouth is required to make such programs available for resale, such programs shall be offered to KMC III on rates, terms and conditions as required by Applicable Law.

4.6.2 Grandfathered Services. BellSouth shall offer for resale to KMC IIIpursuant to FCC 47 C.F.R. § 51.615 all grandfathered services.

4.6.3 N11 Service. BellSouth shall make available for resale any existing N11 services at the discount rates set forth in Exhibit E to this Attachment 1 and in accordance with Exhibit A to this Attachment 1.

4.6.4 911/E911 Service. KMC III shall have the right to resell 911 or E911 services.

4.6.5 Customer Specific Offerings Including Contract Service Arrangements (CSAs) and other contractual arrangements. CSAs shall be available for resale, at the same rates, terms and conditions offered to BellSouth's customers, and in accordance with Commission and FCC Rules and Regulations less the wholesale discount set forth in Exhibit E to this Attachment 1. In cases where KMC III resells an existing CSA, termination liability will not be triggered by a transfer of the CSA from

BellSouth to KMC III. KMC III may resell an existing CSA to the existing customer or to another similarly situated customer. Customers are similarly situated if their quantity of use and time of use, and the manner and costs of service are the same.

4.6.6 Promotions. For purposes of this Agreement, a "short term" promotion will be as set forth in FCC 47 C.F.R. § 51.613.

4.6.6.1 BellSouth shall make Telecommunications Services subject to short term promotions available to KMC III at the short term promotional rate consistent with Exhibit A.

4.6.6.2 The inclusion of a telecommunications service, available for resale at a resale discount, as a component of a promotion, shall not relieve BellSouth of the obligation to offer such underlying telecommunications service separately for resale at the resale discount.

4.6.6.3 Promotions of greater than 90 days will be available to KMC III for resale.

4.6.7 Special Assemblies. Existing special assembly agreements for telecommunications services shall be available for resale, at the same terms and conditions offered to BellSouth's customers. A special assembly shall be made available for resale at the price of the special assembly less the wholesale discount. KMC III shall be responsible for all terms and conditions of such special assembly including but not limited to termination liability if applicable. Termination liability will not be triggered as a result of a transfer of the special assembly from BellSouth to KMC III.

4.6.8 Volume Discount Plans. Subject to Section 4.2 to the extent BellSouth offers, pursuant to its Tariffs, any services the rate for which varies depending upon the volume purchased or the term for which the subscribers commit to purchase such service, BellSouth shall offer such services on the same terms and conditions to KMC III.

4.6.9 Pay Phone Service. BellSouth shall make available to KMC III for resale Public Telephone Access Services (pay phone/PTAS) to the extent BellSouth is required to do so pursuant to FCC and Commission rules.

4.6.10 Voice Mail Service. Where available to BellSouth's customers, BellSouth shall provide the following Telecommunications Services at a discount, as set forth in Exhibit E of this Attachment 1, for use in conjunction with voice mail services:

- Message Waiting Indicator (MWI) stutter dial tone and message waiting light feature capabilities.
- CF/Busy (Call Forward Busy Line).
- CF/DA (Call Forward Don't Answer).

The services listed in BellSouth's Messaging Services Information Package shall be made available for resale, without the wholesale discount, in conjunction with other tariff services offered for resale.

4.6.11 BellSouth shall provide branding for, or shall unbrand, voice mail services for KMC III per the Bona Fide Request/New Business Request process as set forth in Attachment 11 of this Agreement.

4.6.12 Hotel and Hospital PBX services are the only telecommunications services available for resale to Hotel/Motel and Hospital customers, respectively in accordance with Section A2 of BellSouth's GSST. Similarly, Access Line Service for Customer Provided Coin Telephones is the only local service available for resale to Payphone Service Provider (PSP) customers in accordance with Section A7 of BellSouth's GSST. Shared Tenant Service customers can only be sold those local exchange access services available in Section A23 of BellSouth's GSST in the states of Florida, Georgia, North Carolina and South Carolina, and in Section A27 of BellSouth's GSST in the states of Alabama, Kentucky, Louisiana, Mississippi and Tennessee. Notwithstanding the foregoing, if BellSouth offers other services that BellSouth is obligated to make available for resale to CLECs at the wholesale discount to Hotel/Motel and Hospital customers, PSPs and shared tenant services customers, such services shall be available to KMC III for resale to such customers.

4.6.13 Advanced Intelligent Network (AIN). BellSouth shall provide for resale all Advanced Intelligent Network (AIN) services currently provided pursuant to BellSouth's GSST.

4.6.14 Miscellaneous Service Arrangements. KMC III may purchase at the wholesale discount set forth in Exhibit E to this Attachment 1, the entire set of Miscellaneous Service Arrangements (contained in Section A13 of the GSST with the exception of Information Services), or a subset of any one or any combination of such features on an customer-specific basis, without restriction on the minimum or maximum number of lines and features that may be purchased for any one level of service to the extent such restrictions do not apply to BellSouth's retail customers.

4.6.15 Blocking Service. BellSouth shall provide call blocking of 700, 900, and 976 services upon request as well as bill to third party and collect calls from KMC III on a line or trunk basis at parity pursuant to Section A13.9 of BellSouth's GSST.

4.6.16 Busy Line Verification (BLV) and Emergency Line Interrupt (ELI). Where BellSouth does not route operator services traffic to KMC III's platform, BellSouth shall perform BLV/ELI for KMC III on resold BellSouth lines.

4.6.17 Inside Wire Maintenance Plan. BellSouth's Inside Wire Maintenance Service Plan is available for resale in accordance with Exhibit A to this Attachment 1 and with Commission and FCC rules and regulations.

4.6.18 MemoryCall Service. BellSouth's MemoryCall Service is available for resale in accordance with Exhibit A to this Attachment 1 and with Commission and FCC rules and regulations.

4.6.19 Mobile Services. BellSouth's Mobile Services is available for resale in accordance with Exhibit A to this Attachment 1 and with Commission and FCC rules and regulations.

4.6.20 Federal Subscriber Line Charges. BellSouth's Federal Subscriber Line Charges will be passed on to KMC III.

4.6.21 NonRecurring Charges. NonRecurring Charges associated with services available for resale, where applicable, will be assessed at the discount rates set forth in Exhibit E to this Attachment 1 and in accordance with Exhibit A to this Attachment and with Commission and FCC rules and regulations.

4.6.22 Customer Line Change/Number Portability Charge. BellSouth's Customer Line Change/Federal Number Portability Charge will be passed on to KMC III.

4.6.23 AdWatch Service. BellSouth's AdWatch Service is available for resale at the discount rates set forth in Exhibit E to this Attachment 1 and in accordance with Exhibit A to this Attachment and with Commission and FCC rules and regulations.

5. Maintenance of Services

5.1 Services resold pursuant to this Attachment and BellSouth's GSST and Private Line Service Tariff and facilities and equipment provided by BellSouth shall be maintained by BellSouth.

5.2 KMC III or its customers may not rearrange, move, disconnect, remove or attempt to repair any facilities owned by BellSouth except with the written consent of BellSouth.

5.3 To the extent known by appropriate personnel, KMC III will use best efforts to notify BellSouth of situations that arise that may result in a service problem. BellSouth will advise KMC III of any central office, facility, or network failure that is known at the time of any inquiry or trouble report by KMC III.

5.4 KMC III will contact the appropriate repair centers in accordance with procedures established in the BellSouth Operational Understanding Guide located at http://www.interconnection.bellsouth.com/guides/html/other_guides/html.

5.5 For all repair requests, KMC III shall adhere to BellSouth's prescreening guidelines prior to referring the trouble to BellSouth as set forth in the BellSouth Operational Understanding Guide located at http://www.interconnection.bellsouth.com/guides/html/other_guides/html.

5.6 BellSouth will bill KMC III for handling troubles that are found not to be in BellSouth's network pursuant to its standard time and material charges. The standard time and material charges will be no more than what BellSouth charges to its retail customers for handling troubles that are not found to be in BellSouth's network.

5.7 BellSouth reserves the right to contact KMC III's customers, if deemed necessary, for maintenance purposes.

6. Establishment of Account

6.1 Establishment of an account for resale will be done according to the terms of Section 1.2 of Attachment 7 to this Agreement.

7 Establishment of Service

7.1 BellSouth will accept a request directly from the customer for conversion of the customer's service from KMC III to BellSouth or will accept a request from another CLEC for conversion of the customer's service from KMC III to such other CLEC. Upon completion of the conversion BellSouth will notify KMC III that such conversion has been completed.

8. Discontinuance of Service to Customers

8.1 The procedures for discontinuing service to a customer are as follows:

8.1.1 BellSouth will deny service to KMC III's customer on behalf of, and at the request of, KMC III. Upon restoration of the customer's service, restoral charges will apply and will be the responsibility of KMC III.

8.1.2 At the request of KMC III, BellSouth will disconnect a KMC III customer.

8.1.3 All requests by KMC III for denial or disconnection of a customer for nonpayment must be in writing.

8.1.4 KMC III will be made solely responsible for notifying the customer of the proposed disconnection of the service.

9. Discontinuance of Service to KMC III

9.1 Discontinuance of service to KMC III will be done according to the terms of Section 1.6 of Attachment 7 to this Agreement.

10. Operator Services (Operator Call Processing and Directory Assistance)

10.1 Operator Call Processing (OCP). OCP provides: (1) operator handling for call completion (for example, collect, third number billing, and manual calling-card calls). (2) operator or automated assistance for billing after the customer has dialed the called number (for example, calling card calls); and (3) special services including but not limited to BLV and ELI, Emergency Agency Call and Operator-assisted Directory Assistance (DA).

10.2 Upon request for BellSouth OCP, BellSouth shall:

10.2.1 Process 0+ and 0- dialed local calls.

10.2.2 Process 0+ and 0- intraLATA toll calls.

10.2.3 Process calls that are billed to KMC III customer's calling card that can be validated by BellSouth.

10.2.4 Process person-to-person calls.

10.2.5 Process collect calls.

10.2.6 Provide the capability for callers to bill a third party and shall also process such calls.

10.2.7 Process station-to-station calls.

10.2.8 Process BLV and ELI requests.

10.2.9 Process emergency call trace originated by PSAPs.

10.2.10 Process operator-assisted DA calls.

10.2.11 Adhere to equal access requirements, providing KMC III local customers the same IXC access that BellSouth provides its own operator service.

10.2.12 Exercise at least the same level of fraud control in providing Operator Service to KMC III that BellSouth provides for its own operator service.

10.2.13 Perform Billed Number Screening when handling Collect, Person-to-Person, and Billed-To-Third-Party calls.

10.2.14 Direct customer account and other similar inquiries to the customer service center designated by KMC III.

10.2.15 Provide call records to KMC III in accordance with ODUF standards.

10.2.16 The interface requirements shall conform to the interface specifications for the platform used to provide Operator Services (OS) as long as the interface conforms to industry standards.

10.3 Directory Assistance (DA) Service

10.3.1 DA Service provides local and non-local customer telephone number listings with the option to complete the call at the caller's direction separate and distinct from local switching.

10.3.2 DA Service shall provide up to two (2) listing requests per call, if available and if requested by KMC III's customer. BellSouth shall provide caller-optional DA call completion service at rates set forth in BellSouth's GSST to one (1) of the provided listings.

10.4 DA Service Updates

10.4.1 BellSouth shall update customer listings changes daily. These changes include:

10.4.2 New customer connections.

10.4.3 Customer disconnections.

10.4.4 Customer address changes.

10.4.5 These updates shall also be provided for non-listed and non-published numbers for use in emergencies.

10.5 Branding for OCP and DA

10.5.1 BellSouth's branding feature provides a definable announcement to KMC III customers using DA/ OCP prior to placing such customers in queue or connecting them to an available operator or automated operator system. This feature allows KMC III's name on whose behalf BellSouth is providing DA and/or OCP. Rates for the branding features are set forth in Exhibit E of this Attachment.

10.5.2 BellSouth offers three branding offering options to KMC III when ordering BellSouth's DA and OCP: BellSouth Branding, Unbranding and Custom Branding.

10.5.3 Upon receipt of the branding order from KMC III, the order is considered firm after ten (10) business days. Should KMC III decide to cancel the order, written notification to KMC III's BellSouth Account Executive is required. If KMC III

decides to cancel after ten (10) business days from receipt of the branding order, KMC III shall pay all charges per the order.

10.6 Selective Call Routing using Line Class Codes (SCR-LCC)

10.6.1 Where KMC III resells BellSouth's services and utilizes an operator services provider other than BellSouth, BellSouth will route KMC III's customer calls to that provider through Selective Call Routing (SCR).

10.6.2 SCR-LCC provides the capability for KMC III to have its OCP/DA calls routed to BellSouth's OCP/DA platform for BellSouth provided Custom Branded or Unbranded OCP/DA or to its own or an alternate OCP/DA platform for Self-Branded OCP/DA. SCR-LCC is only available if line class code capacity is available in the requested BellSouth end office switches.

10.6.3 Custom Branding for DA is not available for certain classes of service, including but not limited to Hotel/Motel services, WATS service and certain PBX services.

10.6.4 Where available, KMC III specific and unique line class codes are programmed in each BellSouth end office switch where KMC III intends to service customers with customized OCP/DA branding. The line class codes specifically identify KMC III's customers so OCP/DA calls can be routed over the appropriate trunk group to the request OCP/DA platform. Additional line class codes are required in each end office if the end office serves multiple NPAs (i.e., a unique LCC is required per NPA), and/or if the end office switch serves multiple rate areas and KMC III intends to provide KMC III branded OCP/DA to its customers in these multiple rate areas.

10.6.5 BellSouth Branding is the default branding offering.

10.6.6 SCR-LCC supporting Custom Branding and Self Branding require KMC III to order dedicated transport and trunking from each BellSouth end office identified by KMC III, either to the BellSouth Traffic Operator Position System (TOPS) for Custom Branding or to the KMC III Operator Service Provider for Self Branding. Separate trunk groups are required for Operator Services and for Directory Assistance. Rates, terms and conditions for transport and trunks shall be in accordance with Section 4.8.1.1 of Attachment 3.

10.6.7 The rates for SCR-LCC are as set forth in Exhibit E of this Attachment. There is a nonrecurring charge for the establishment of each Line Class Code in each BellSouth central office.

10.6.8 Unbranded DA and/or OCP calls ride common trunk groups provisioned by BellSouth from those end offices identified by KMC III to the BellSouth Tops. The calls are routed to "No Announcement."

10.7 Branding via Originating Line Number Screening (OLNS)

10.7.1 BellSouth Branding, Unbranding and Custom Branding are also available for DA, OCP or both via OLNS software. When utilizing this method of Unbranding or Custom Branding KMC III shall not be required to purchase direct trunking.

10.7.2 BellSouth Branding is the default branding offering.

10.7.3 For BellSouth to provide Unbranding or Custom Branding via OLNS software for OCP or for DA KMC III must have its Operating Company Number (OCN(s)) and telephone numbers reside in BellSouth's LIDB; however, a BellSouth LIDB Storage Agreement is not required. To implement Unbranding and Custom Branding via OLNS software, KMC III must submit a manual order form which requires, among other things, KMC III's OCN and a forecast for the traffic volume anticipated for each BellSouth TOPS during the peak busy hour. KMC III shall provide updates to such forecast on a quarterly basis and at any time such forecasted traffic volumes are expected to change significantly. Upon KMC III's purchase of Unbranding and Custom Branding using OLNS software for any particular TOPS, all KMC III customers served by that TOPS will receive the Unbranded "no announcement" or the Custom Branded announcement.

10.7.4 Rates for Unbranding and Custom Branding via OLNS software for DA and for OCP are as set forth in Exhibit E of this Attachment. Notwithstanding anything to the contrary in this Agreement, to the extent BellSouth is unable to bill KMC III applicable charges currently, BellSouth shall track such charges and will bill the same retroactively at such time as a billing process is implemented. In addition to the charges for Unbranding and Custom Branding via OLNS software, KMC III shall continue to pay BellSouth applicable labor and other charges for the use of BellSouth's DA and Call Processing platforms as set forth in Exhibit E of this Attachment.

10.7.5 Customized Branding includes charges for the recording of the branding announcement and the loading of the audio units in each TOPS Switch and Network Applications Vehicle (NAV) equipment for which KMC III requires service.

10.7.6 DA customized branding uses:

10.7.6.1 The recording of KMC III.

10.7.6.2 The loading of the recording in each switch.

10.7.7 OCP customized branding uses:

10.7.7.1 The recording of KMC III.

10.7.7.2 The loading of the recording in each switch.

10.7.7.3 The loading on the NAV. All NAV shelves within the region where KMC III is offering service must be loaded.

11. Line Information Database (LIDB)

11.1 BellSouth will store in its LIDB records relating to service only in the BellSouth region. The LIDB Storage Agreement is included in this Attachment as Exhibit B.

11.2 BellSouth will provide LIDB Storage upon written request to KMC III's Account Manager stating a requested activation date.

12. RAO Hosting

12.1 RAO Hosting is not required for resale in the BellSouth region.

13. Optional Daily Usage File (ODUF)

13.1 The ODUF Agreement with terms and conditions is included in this Attachment as Exhibit C. Rates for ODUF are as set forth in Exhibit E of this Attachment.

13.2 BellSouth will provide ODUF service upon written request to its Account Manager stating a requested activation date.

14. Enhanced Optional Daily Usage File (EODUF)

14.1 The EODUF service Agreement with terms and conditions is included in this Attachment as Exhibit D. Rates for EODUF are as set forth in Exhibit E of this Attachment.

14.2 BellSouth will provide EODUF service upon written request to its Account Manager stating a requested activation date.

EXCLUSIONS AND LIMITATIONS ON SERVICES AVAILABLE FOR RESALE (Note 3)

	Type of Service	AL		FL		GA		KY		LA		MS		NC		SC		TN	
		Resale	Discount	Resale	Discount	Resale	Discount	Resale	Discount	Resale	Discount	Resale	Discount	Resale	Discount	Resale	Discount	Resale	Discount
1	Grandfathered Services (Note 1)	Yes	Yes	Yes	Yes	Yes	Yes	Yes	Yes	Yes	Yes	Yes	Yes	Yes	Yes	Yes	Yes	Yes	Yes
2	Promotions - > 90 Days(Note 2)	Yes	Yes	Yes	Yes	Yes	Yes	Yes	Yes	Yes	Yes	Yes	Yes	Yes	Yes	Yes	Yes	Yes	Yes
3	Promotions - ≤ 90 Days (Note 2)	Yes	No	Yes	No	Yes	No	Yes	No	Yes	No	Yes	No	Yes	No	Yes	No	Yes	No
4	Lifeline/Link Up Services	Yes	Yes	Yes	Yes	Yes	Yes	No	No	Yes	Yes	Yes	Yes	Yes	Yes	Yes	Yes	Yes	Yes
5	911/E911 Services	Yes	Yes	Yes	Yes	Yes	Yes	Yes	Yes	No	No	Yes	Yes	Yes	Yes	Yes	Yes	Yes	Yes
6	N11 Services	Yes	Yes	Yes	Yes	Yes	Yes	No	No	No	No	Yes	Yes	Yes	Yes	No	No	Yes	Yes
7	MemoryCall®Service	Yes	No	Yes	No	Yes	No	Yes	No	Yes	No	Yes	No	Yes	No	Yes	No	Yes	No
8	Mobile Services	Yes	No	Yes	No	Yes	No	Yes	No	Yes	No	Yes	No	Yes	No	Yes	No	Yes	No
9	Federal Subscriber Line Charges	Yes	No	Yes	No	Yes	No	Yes	No	Yes	No	Yes	No	Yes	No	Yes	No	Yes	No
10	Non-RecurCharges	Yes	Yes	Yes	Yes	Yes	Yes	Yes	Yes	Yes	Yes	Yes	Yes	Yes	Yes	Yes	Yes	Yes	No
11	Customer Line Chg-Number Portability	Yes	No	Yes	No	Yes	No	Yes	No	Yes	No	Yes	No	Yes	No	Yes	No	Yes	No
12	Public Telephone Access Svc(PTAS)	Yes	Yes	Yes	Yes	Yes	Yes	Yes	Yes	Yes	Yes	Yes	Yes	Yes	Yes	Yes	No	Yes	Yes
13	Inside Wire Maint Service Plan	Yes	No	Yes	No	Yes	No	Yes	No	Yes	No	Yes	No	Yes	No	Yes	No	Yes	No

	Applicable Notes:
1.	**Grandfathered services** can be resold only to existing subscribers of the grandfathered service.
2.	Where available for resale, **promotions** will be made available only to customers who would have qualified for the promotion had it been provided by BellSouth directly.
3.	Some of BellSouth's local exchange and toll telecommunications services are not available in certain central offices and areas.

LINE INFORMATION DATA BASE (LIDB)

RESALE STORAGE AGREEMENT

I. Definitions (from Addendum)

A. Billing number - a number used by BellSouth for the purpose of identifying an account liable for charges. This number may be a line or a special billing number.

B. Line number - a ten (10) digit number assigned by BellSouth that identifies a telephone line associated with a resold local exchange service.

C. Special billing number - a ten (1) digit number that identifies a billing account established by BellSouth in connection with a resold local exchange service.

D. Calling Card number - a billing number plus PIN number assigned by BellSouth.

E. PIN number - a four (4) digit security code assigned by BellSouth that is added to a billing number to compose a fourteen (14) digit calling card number.

F. Toll billing exception indicator - associated with a billing number to indicate that it is considered invalid for billing of collect calls or third number calls or both, by KMC III.

G. Billed Number Screening - refers to the query service used to determine whether a toll billing exception indicator is present for a particular billing number.

H. Calling Card Validation - refers to the query service used to determine whether a particular calling card number exists as stated or otherwise provided by a caller.

I. Billing number information - information about billing number or Calling Card number as assigned by BellSouth and toll billing exception indicator provided to BellSouth by KMC III.

J. Get-Data - refers to the query service used to determine, at a minimum, the Account Owner and/or Regional Accounting Office for a line number. This query service may be modified to provide additional information in the future.

K. OLNS - refers to the query service used to determine the billing, screening and call handling indicators, station type and Account Owner provided to BellSouth by KMC III for originating line numbers.

L. Account Owner - name of the local exchange telecommunications company that is providing dialtone on a subscriber line.

II. General

A. This Agreement sets forth the terms and conditions pursuant to which BellSouth agrees to store in its LIDB certain information at the request of KMC III and pursuant to which BellSouth, its LIDB customers and KMC III shall have access to such information. In addition, this Agreement sets forth the terms and conditions for KMC III's provision of billing number information to BellSouth for inclusion in BellSouth's LIDB. KMC III understands that BellSouth provides access to information in its LIDB to various telecommunications service providers pursuant to applicable tariffs and agrees that information stored at the request of KMC III, pursuant to this Agreement, shall be available to those telecommunications service providers. The terms and conditions contained herein shall hereby be made a part of this Agreement upon notice to KMC III's account team and/or Local Contract Manager activate this LIDB Storage Agreement. The General Terms and Conditions of the Agreement shall govern this LIDB Storage Agreement.

B. BellSouth will provide responses to on-line, call-by-call queries to billing number information for the following purposes:

1. Billed Number Screening

   BellSouth is authorized to use the billing number information to determine whether KMC III has identified the billing number as one that should not be billed for collect or third number calls.

2. Calling Card Validation

   BellSouth is authorized to validate a fourteen (14) digit Calling Card number where the first ten (10) digits are a line number or special billing number assigned by BellSouth, and where the last four (4) digits (PIN) are a security code assigned by BellSouth.

3. OLNS

   BellSouth is authorized to provide originating line screening information for billing services restrictions, station type, call handling indicators, presubscribed interLATA and local carrier and account owner on the lines of KMC III from which a call originates.

4. GetData

   BellSouth is authorized to provide, at a minimum, the account owner and/or Regional Accounting Office information on the lines of KMC III indicating the local service provider and where billing records are to be sent for settlement

purposes. This query service may be modified to provide additional information in the future.

5. Fraud Control

BellSouth will provide seven days per week, 24-hours per day, fraud monitoring on Calling Cards, bill-to-third and collect calls made to numbers in BellSouth's LIDB, provided that such information is included in the LIDB query. BellSouth will establish fraud alert thresholds and will notify KMC III of fraud alerts so that KMC III may take action it deems appropriate.

III. Responsibilities of the Parties

A. BellSouth will administer all data stored in the LIDB, including the data provided by KMC III pursuant to this Agreement, in the same manner as BellSouth's data for BellSouth's customers. BellSouth shall not be responsible to KMC III for any lost revenue which may result from BellSouth's administration of the LIDB pursuant to its established practices and procedures as they exist and as they may be changed by BellSouth in its sole discretion from time to time.

B. Billing and Collection Customers

BellSouth currently has in effect numerous billing and collection agreements with various interexchange carriers and billing clearing houses and as such these billing and collection customers (B&C Customers) query BellSouth's LIDB to determine whether to accept various billing options from customers. Until such time as BellSouth implements in its LIDB and its supporting systems the means to differentiate KMC III's data from BellSouth's data, the following shall apply:

(1) BellSouth will identify KMC III customer originated long distance charges and will return those charges to the interexchange carrier as not covered by the existing B&C agreement. KMC III is responsible for entering into the appropriate agreement with interexchange carriers for handling of long distance charges by their customers.

(2) BellSouth shall have no obligation to become involved in any disputes between KMC III and B&C Customers. BellSouth will not issue adjustments for charges billed on behalf of any B&C Customer to KMC III. It shall be the responsibility of KMC III and the B&C Customers to negotiate and arrange for any appropriate adjustments.

IV. Fees for Service and Taxes

A. KMC III will not be charged a fee for storage services provided by BellSouth to KMC III, as described in this LIDB Resale Storage Agreement.

B. Sales, use and all other taxes (excluding taxes on BellSouth's income) determined by BellSouth or any taxing authority to be due to any federal, state or local taxing jurisdiction with respect to the provision of the service set forth herein will be paid by

KMC III in accordance with the tax provisions set forth in the General Terms and Conditions of this Agreement.

Optional Daily Usage File

1. Upon written request from KMC III, BellSouth will provide the ODUF service to KMC III pursuant to the terms and conditions set forth in this section. ODUF data delivery accuracy, completeness, timeliness and mean time to deliver will be in accordance with SQMs B3, B4, B5 and B6.

2. KMC III shall furnish all relevant information required by BellSouth for the provision of the ODUF.

3. The ODUF feed will contain messages that were carried over the BellSouth Network and processed in the BellSouth Billing System, but billed to a KMC III customer.

4. Charges for ODUF will appear on KMC III's monthly bills for the previous month's usage. The charges are as set forth in Exhibit E to this Attachment. KMC III will be billed at the ODUF rates that are in effect at the end of the previous month.

5. The ODUF feed will contain both rated and unrated messages. All messages will be in the standard Alliance for Telecommunications Industry Solutions (ATIS) EMI record format.

6. Messages that error in the billing system of KMC III will be the responsibility of KMC III. If, however, KMC III should encounter significant volumes of errored messages that prevent processing by KMC III within its systems, BellSouth will work with KMC III to determine the source of the errors and the appropriate resolution. Upon request from KMC III, BellSouth shall resend errored messages in accordance with SQM B-9.

6. The following specifications shall apply to the ODUF feed.

6.1 ODUF Message to be Transmitted

6.1.1 The following messages recorded by BellSouth will be transmitted to KMC III:

- Message recording for per use/per activation type services (examples: Three Way Calling, Verify, Interrupt, Call Return, etc.)
- Measured Local
- DA messages
- IntraLATA Toll
- WATS and 800 Service

- N11
- Information Service Provider Messages
- Operator Services Messages
- Operator Services Message Attempted Calls (Network Element only)
- Credit/Cancel Records
- Usage for Voice Mail Message Service

6.1.2 Rated Incollects (messages BellSouth receives from other revenue accounting companies) can also be on ODUF. Rated Incollects will be intermingled with BellSouth recorded rated and unrated usage. Rated Incollects will not be packed separately.

6.1.3 BellSouth will perform duplicate record checks on records processed to ODUF. Any duplicate messages detected will be deleted and not sent to KMC III.

6.1.4 In the event that KMC III detects a duplicate on ODUF they receive from BellSouth, KMC III will drop the duplicate message and will not return the duplicate to BellSouth).

6.2 ODUF Physical File Characteristics

6.2.1 ODUF will be distributed to KMC III via CONNECT:Direct, Connect: Enterprise Client or another mutually agreed medium. The ODUF feed will be a variable block format. The data on the ODUF feed will be in a non-compacted EMI format (one hundred seventy-five (175) byte format plus modules). It will be created on a daily basis Monday through Friday except holidays. Details such as dataset name and delivery schedule will be addressed during negotiations of the distribution medium. There will be a maximum of one (1) dataset per workday per OCN.

6.2.2 Data circuits (private line or dial-up) will be required between BellSouth and KMC III for the purpose of data transmission when utilizing CONNECT:Direct. Where a dedicated line is required, KMC III will be responsible for ordering the circuit, and coordinating the installation with BellSouth. KMC III will also be responsible for any charges associated with this line. CSU/DSU equipment required on the BellSouth end to attach the line to the mainframe computer and to transmit data will be the responsibility of KMC III. Where a dial-up facility is required, dial circuits will be installed in the BellSouth data center by BellSouth and the associated charges assessed to KMC III. Additionally, all message toll charges associated with the use of the dial circuit by KMC III will be the responsibility of KMC III. Associated equipment on the BellSouth end, including a modem, will be the responsibility of BellSouth. All

equipment, including modems and software, that is required on KMC III end for the purpose of data transmission will be the responsibility of KMC III.

6.2.3 If KMC III utilizes CONNECT:Enterprise Client for data file transmission, purchase of the CONNECT:Enterprise Client software will be the responsibility of KMC III.

6.3 ODUF Packing Specifications

6.3.1 A pack will contain a minimum of one (1) message record or a maximum of ninety-nine thousand nine hundred and ninety-nine (99,999) message records plus a pack header record and a pack trailer record. One transmission can contain a maximum of ninety-nine (99) packs and a minimum of one (1) pack.

6.3.2 The OCN, From RAO, and Invoice Number will control the invoice sequencing. The From RAO will be used to identify to KMC III which BellSouth RAO that is sending the message. BellSouth and KMC III will use the invoice sequencing to control data exchange. BellSouth will be notified of sequence failures identified by KMC III and resend the data as quickly as technically possible.

The data will be packed using ATIS EMI records.

6.4 ODUF Pack Rejection

6.4.1 KMC III will notify BellSouth within one (1) business day of rejected packs (via the mutually agreed medium). Packs could be rejected because of pack sequencing discrepancies or a critical edit failure on the Pack Header or Pack Trailer records (i.e., out-of-balance condition on grand totals, invalid data populated). Standard ATIS EMI Error Codes will be used. KMC III will not be required to return the actual rejected data to BellSouth. Rejected packs will be corrected and retransmitted to KMC III by BellSouth.

6.5 ODUF Control Data

KMC III will send one (1) confirmation record per pack that is received from BellSouth. This confirmation record will indicate KMC III's receipt of the pack and acceptance or rejection of the pack. Pack Status Code(s) will be populated using standard ATIS EMI error codes for packs that were rejected by KMC III for reasons stated in the above section.

6.6 ODUF Testing

6.6.1 Upon request from KMC III, BellSouth shall send ODUF test files to KMC III. The Parties agree to review and discuss the ODUF content and/or format. For testing of usage results, BellSouth shall request that KMC III set up a production (live) file. The live test may consist of KMC III's employees making test calls for the types of services KMC III requests on ODUF. These test calls are logged by KMC III, and the

logs are provided to BellSouth. These logs will be used to verify the files. Testing will be completed within thirty (30) days from the date on which the initial test file was sent.

Enhanced Optional Daily Usage File

1. Upon written request from KMC III, BellSouth will provide the EODUF service to KMC III pursuant to the terms and conditions set forth in this section. EODUF will only be sent to existing ODUF subscribers who request the EODUF option.

2. KMC III shall furnish all relevant information required by BellSouth for the provision of the EODUF.

3. The EODUF will provide usage data for local calls originating from resold Flat Rate Business and Residential Lines.

4. Charges for delivery of the EODUF will appear on KMC III's monthly bills for the previous month's usage. The charges are as set forth in Exhibit E to this Attachment. KMC III will be billed at the EODUF rates that are in effect at the end of the previous month.

5. All messages will be in the standard Alliance for Telecommunications Industry Solutions (ATIS) EMI record format.

6. Messages that error in the billing system of KMC III will be the responsibility of KMC III. If, however, KMC III should encounter significant volumes of errored messages that prevent processing by KMC III within its systems, BellSouth will work with KMC III to determine the source of the errors and the appropriate resolution. Upon request from KMC III, BellSouth shall resend errored messages as required by SQM B-9.

7. The following specifications shall apply to the EODUF feed.

7.1 Usage To Be Transmitted

7.1.1 The following messages recorded by BellSouth will be transmitted to KMC III:

Customer usage data for flat rated local call originating from KMC III's customer lines (1FB or 1FR). The EODUF record for flat rate messages will include:

Date of Call

From Number

To Number

Connect Time

Conversation Time

Method of Recording

From RAO

Rate Class

Message Type

Billing Indicators

Bill to Number

7.1.2 BellSouth will perform duplicate record checks on EODUF records processed to ODUF. Any duplicate messages detected will be deleted and not sent to KMC III.

7.1.3 In the event that KMC III detects a duplicate on EODUF they receive from BellSouth, KMC III will drop the duplicate message (KMC III will not return the duplicate to BellSouth).

7.2 Physical File Characteristics

7.2.1 The EODUF feed will be distributed to KMC III over their existing ODUF feed. The EODUF messages will be intermingled among KMC III's ODUF messages. The EODUF will be a variable block format (2476) with a LRECL of 2472. The data on the EODUF will be in a non-compacted EMI format (one hundred seventy-five (175) byte format plus modules). It will be created on a daily basis (Monday through Friday except holidays).

7.2.2 Data circuits (private line or dial-up) may be required between BellSouth and KMC III for the purpose of data transmission as set forth in Section 6.2.2 above.

7.2.3 Data circuits (private line or dial-up) will be required between BellSouth and KMC III for the purpose of data transmission when utilizing CONNECT:Direct. Where a dedicated line is required, KMC III will be responsible for ordering the circuit, and coordinating the installation with BellSouth. KMC III will also be responsible for any charges associated with this line. CSU/DSU equipment required on the BellSouth end to attach the line to the mainframe computer and to transmit data will be the responsibility of KMC III. Where a dial-up facility is required, dial circuits will be installed in the BellSouth data center by BellSouth and the associated charges assessed to KMC III. Additionally, all message toll charges associated with the use of the dial circuit by KMC III will be the responsibility of KMC III. Associated equipment on the BellSouth end, including a modem, will be the responsibility of BellSouth. All equipment, including modems and software, that is required on KMC III end for the purpose of data transmission will be the responsibility of KMC III.

7.3 Packing Specifications

7.3.1 A pack will contain a minimum of one (1) message record or a maximum of ninety-nine thousand nine hundred ninety-nine (99,999) message records plus a pack header record and a pack trailer record. One (1) transmission can contain a maximum of ninety-nine (99) packs and a minimum of one (1) pack.

7.3.2 The OCN, From (RAO), and Invoice Number will control the invoice sequencing. The From RAO will be used to identify to KMC III which BellSouth RAO is sending the message. BellSouth and KMC III will use the invoice sequencing to control data exchange. BellSouth will be notified of sequence failures identified by KMC III and resend the data as quickly as technically possible.

7.3.3 The data will be packed using ATIS EMI Records.

Resale Discounts & Rates - Alabama														Attachment: 1		Exhibit: D	
CATEGORY		RATE ELEMENTS	Interim	Zone	BCS	USOC	RATES($)					Svc Order Submitted Elec per LSR	Svc Order Submitted Manually per LSR	Incremental Charge - Manual Svc Order vs. Electronic-1st	Incremental Charge - Manual Svc Order vs. Electronic-Add'l	Incremental Charge - Manual Svc Order vs. Electronic-Disc 1st	Incremental Charge - Manual Svc Order vs. Electronic-Disc Add'l
							Rec	Nonrecurring		Nonrecurring Disconnect		OSS Rates($)					
								First	Add'l	First	Add'l	SOMEC	SOMAN	SOMAN	SOMAN	SOMAN	SOMAN
APPLICABLE DISCOUNTS																	
		Residence %					16.30										
		Business %					16.30										
		CSAs %					16.30										
OPERATIONS SUPPORT SYSTEMS (OSS) - "REGIONAL RATES"																	
	NOTE: (1) CLEC should contact its contract negotiator if it prefers the "state specific" OSS charges as ordered by the State Commissions. The OSS charges currently contained in this rate exhibit are the BellSouth "regional" service ordering charges. CLEC may elect either the state specific Commission ordered rates for the service ordering charges, or CLEC may elect the regional service ordering charge, however, CLEC can not obtain a mixture of the two regardless if CLEC has a interconnection contract established in each of the 9 states.															
		OSS - Electronic Service Order Charge, Per Local Service Request (LSR) - Resale Only				SOMEC		3.50	0.00	3.50	0.00						
		OSS - Manual Service Order Charge, Per Local Service Request (LSR) - Resale Only				SOMAN		19.99	0.00	19.99	0.00						
BRANDING - DIRECTORY ASSISTANCE																	
	Branding																
		Recording of DA Custom Branded Announcement						3,000.00	3,000.00								
		Loading of DA Custom Branded Announcement per Switch per OCN						1,170.00	1,170.00								
	Unbranding via OLNS for Wholesale CLEC																
		Loading of DA per OCN (1 OCN per Order)						420.00	420.00								
		Loading of DA per Switch per OCN						16.00	16.00								
BRANDING - OPERATOR CALL PROCESSING																	
	Branding																
		Recording of Custom Branded OA Announcement						7,000.00	7,000.00								
		Loading of Custom Branded OA Announcement per shelf/NAV per OCN						500.00	500.00								
	Unbranding via OLNS for Wholesale CLEC																
		Loading of OA per OCN (Regional)						1,200.00	1,200.00								
ODUF/EODUF SERVICES																	
	OPTIONAL DAILY USAGE FILE (ODUF)																
		ODUF: Recording, per message					0.000011										
		ODUF: Message Processing, per message					0.004101										
		ODUF: Message Processing, per Magnetic Tape provisioned					42.67										
		ODUF: Data Transmission (CONNECT:DIRECT), per message					0.000094										
	ENHANCED OPTIONAL DAILY USAGE FILE (EODUF)																
		EODUF: Message Processing, per message					0.22										

Resale Discounts & Rates - Florida														Attachment: 1		Exhibit: D	
CATEGORY		RATE ELEMENTS	Interim	Zone	BCS	USOC	RATES($)					Svc Order Submitted Elec per LSR	Svc Order Submitted Manually per LSR	Incremental Charge - Manual Svc Order vs. Electronic-1st	Incremental Charge - Manual Svc Order vs. Electronic-Add'l	Incremental Charge - Manual Svc Order vs. Electronic-Disc 1st	Incremental Charge - Manual Svc Order vs. Electronic-Disc Add'l
							Rec	Nonrecurring		Nonrecurring Disconnect		OSS Rates($)					
								First	Add'l	First	Add'l	SOMEC	SOMAN	SOMAN	SOMAN	SOMAN	SOMAN
APPLICABLE DISCOUNTS																	
		Residence %					21.83										
		Business %					16.81										
		CSAs %					16.81										
OPERATIONS SUPPORT SYSTEMS (OSS) - "REGIONAL RATES"																	
	NOTE: (1) CLEC should contact its contract negotiator if it prefers the "state specific" OSS charges as ordered by the State Commissions. The OSS charges currently contained in this rate exhibit are the BellSouth "regional" service ordering charges. CLEC may elect either the state specific Commission ordered rates for the service ordering charges, or CLEC may elect the regional service ordering charge, however, CLEC can not obtain a mixture of the two regardless if CLEC has a interconnection contract established in each of the 9 states.															
		OSS - Electronic Service Order Charge, Per Local Service Request (LSR) - Resale Only				SOMEC		3.50	0.00	3.50	0.00						
		OSS - Manual Service Order Charge, Per Local Service Request (LSR) - Resale Only				SOMAN		19.99	0.00	19.99	0.00						
BRANDING - DIRECTORY ASSISTANCE																	
	Branding																
		Recording of DA Custom Branded Announcement						3,000.00	3,000.00								
		Loading of DA Custom Branded Announcement per Switch per OCN						1,170.00	1,170.00								
	Unbranding via OLNS for Wholesale CLEC																
		Loading of DA per OCN (1 OCN per Order)						420.00	420.00								
		Loading of DA per Switch per OCN						16.00	16.00								
BRANDING - OPERATOR CALL PROCESSING																	
	Branding																
		Recording of Custom Branded OA Announcement						7,000.00	7,000.00								
		Loading of Custom Branded OA Announcement per shelf/NAV per OCN						500.00	500.00								
	Unbranding via OLNS for Wholesale CLEC																
		Loading of OA per OCN (Regional)						1,200.00	1,200.00								
ODUF/EODUF SERVICES																	
	OPTIONAL DAILY USAGE FILE (ODUF)																
		ODUF: Recording, per message					0.0000071										
		ODUF: Message Processing, per message					0.002146										
		ODUF: Message Processing, per Magnetic Tape provisioned					35.91										
		ODUF: Data Transmission (CONNECT:DIRECT), per message					0.00010375										
	ENHANCED OPTIONAL DAILY USAGE FILE (EODUF)																
		EODUF: Message Processing, per message					0.080698										

Resale Discounts & Rates - Georgia														Attachment: 1		Exhibit: D	
CATEGORY		RATE ELEMENTS	Interim	Zone	BCS	USOC	RATES($)					Svc Order Submitted Elec per LSR	Svc Order Submitted Manually per LSR	Incremental Charge - Manual Svc Order vs. Electronic-1st	Incremental Charge - Manual Svc Order vs. Electronic-Add'l	Incremental Charge - Manual Svc Order vs. Electronic-Disc 1st	Incremental Charge - Manual Svc Order vs. Electronic-Disc Add'l
							Rec	Nonrecurring		Nonrecurring Disconnect		OSS Rates($)					
								First	Add'l	First	Add'l	SOMEC	SOMAN	SOMAN	SOMAN	SOMAN	SOMAN
APPLICABLE DISCOUNTS																	
		Residence %					20.30										
		Business %					17.30										
		CSAs %					17.30										
OPERATIONS SUPPORT SYSTEMS (OSS) - "REGIONAL RATES"																	
	NOTE: (1) CLEC should contact its contract negotiator if it prefers the "state specific" OSS charges as ordered by the State Commissions. The OSS charges currently contained in this rate exhibit are the BellSouth "regional" service ordering charges. CLEC may elect either the state specific Commission ordered rates for the service ordering charges, or CLEC may elect the regional service ordering charge, however, CLEC can not obtain a mixture of the two regardless if CLEC has a interconnection contract established in each of the 9 states.															
		OSS - Electronic Service Order Charge, Per Local Service Request (LSR) - Resale Only				SOMEC		3.50	0.00	3.50	0.00						
		OSS - Manual Service Order Charge, Per Local Service Request (LSR) - Resale Only				SOMAN		19.99	0.00	19.99	0.00						
BRANDING - DIRECTORY ASSISTANCE																	
	Branding																
		Recording of DA Custom Branded Announcement						3,000.00	3,000.00								
		Loading of DA Custom Branded Announcement per Switch per OCN						1,170.00	1,170.00								
	Unbranding via OLNS for Wholesale CLEC																
		Loading of DA per OCN (1 OCN per Order)						420.00	420.00								
		Loading of DA per Switch per OCN						16.00	16.00								
BRANDING - OPERATOR CALL PROCESSING																	
	Branding																
		Recording of Custom Branded OA Announcement						7,000.00	7,000.00								
		Loading of Custom Branded OA Announcement per shelf/NAV per OCN						500.00	500.00								
	Unbranding via OLNS for Wholesale CLEC																
		Loading of OA per OCN (Regional)						1,200.00	1,200.00								
ODUF/EODUF SERVICES																	
	OPTIONAL DAILY USAGE FILE (ODUF)																
		ODUF: Recording, per message					0.0000068										
		ODUF: Message Processing, per message					0.002167										
		ODUF: Message Processing, per Magnetic Tape provisioned					36.06										
		ODUF: Data Transmission (CONNECT:DIRECT), per message					0.00010856										
	ENHANCED OPTIONAL DAILY USAGE FILE (EODUF)																
		EODUF: Message Processing, per message					0.227409										

Resale Discounts & Rates - Kentucky														Attachment: 1		Exhibit: D	
CATEGORY		RATE ELEMENTS	Interim	Zone	BCS	USOC	RATES($)					Svc Order Submitted Elec per LSR	Svc Order Submitted Manually per LSR	Incremental Charge - Manual Svc Order vs. Electronic-1st	Incremental Charge - Manual Svc Order vs. Electronic-Add'l	Incremental Charge - Manual Svc Order vs. Electronic-Disc 1st	Incremental Charge - Manual Svc Order vs. Electronic-Disc Add'l
							Rec	Nonrecurring		Nonrecurring Disconnect		OSS Rates($)					
								First	Add'l	First	Add'l	SOMEC	SOMAN	SOMAN	SOMAN	SOMAN	SOMAN
APPLICABLE DISCOUNTS																	
		Residence %					16.79										
		Business %					15.54										
		CSAs %					15.54										
OPERATIONS SUPPORT SYSTEMS (OSS) - "REGIONAL RATES"																	
	NOTE: (1) CLEC should contact its contract negotiator if it prefers the "state specific" OSS charges as ordered by the State Commissions. The OSS charges currently contained in this rate exhibit are the BellSouth "regional" service ordering charges. CLEC may elect either the state specific Commission ordered rates for the service ordering charges, or CLEC may elect the regional service ordering charge, however, CLEC can not obtain a mixture of the two regardless if CLEC has a interconnection contract established in each of the 9 states.															
		OSS - Electronic Service Order Charge, Per Local Service Request (LSR) - Resale Only				SOMEC		3.50	0.00	3.50	0.00						
		OSS - Manual Service Order Charge, Per Local Service Request (LSR) - Resale Only				SOMAN		19.99	0.00	19.99	0.00						
BRANDING - DIRECTORY ASSISTANCE																	
	Branding																
		Recording of DA Custom Branded Announcement						3,000.00	3,000.00								
		Loading of DA Custom Branded Announcement per Switch per OCN						1,170.00	1,170.00								
	Unbranding via OLNS for Wholesale CLEC																
		Loading of DA per OCN (1 OCN per Order)						420.00	420.00								
		Loading of DA per Switch per OCN						16.00	16.00								
BRANDING - OPERATOR CALL PROCESSING																	
	Branding																
		Recording of Custom Branded OA Announcement						7,000.00	7,000.00								
		Loading of Custom Branded OA Announcement per shelf/NAV per OCN						500.00	500.00								
	Unbranding via OLNS for Wholesale CLEC																
		Loading of OA per OCN (Regional)						1,200.00	1,200.00								
ODUF/EODUF SERVICES																	
	OPTIONAL DAILY USAGE FILE (ODUF)																
		ODUF: Recording, per message					0.0000136										
		ODUF: Message Processing, per message					0.002506										
		ODUF: Message Processing, per Magnetic Tape provisioned					35.90										
		ODUF: Data Transmission (CONNECT:DIRECT), per message					0.00010372										
	ENHANCED OPTIONAL DAILY USAGE FILE (EODUF)																
		EODUF: Message Processing, per message					0.235889										

Resale Discounts & Rates - Louisiana														Attachment: 1		Exhibit: D	
CATEGORY		RATE ELEMENTS	Interim	Zone	BCS	USOC	RATES($)					Svc Order Submitted Elec per LSR	Svc Order Submitted Manually per LSR	Incremental Charge - Manual Svc Order vs. Electronic-1st	Incremental Charge - Manual Svc Order vs. Electronic-Add'l	Incremental Charge - Manual Svc Order vs. Electronic-Disc 1st	Incremental Charge - Manual Svc Order vs. Electronic-Disc Add'l
							Rec	Nonrecurring		Nonrecurring Disconnect		OSS Rates($)					
								First	Add'l	First	Add'l	SOMEC	SOMAN	SOMAN	SOMAN	SOMAN	SOMAN
APPLICABLE DISCOUNTS																	
		Residence %					20.72										
		Business %					20.72										
		CSAs %					9.05										
OPERATIONS SUPPORT SYSTEMS (OSS) - "REGIONAL RATES"																	
	NOTE: (1) CLEC should contact its contract negotiator if it prefers the "state specific" OSS charges as ordered by the State Commissions. The OSS charges currently contained in this rate exhibit are the BellSouth "regional" service ordering charges. CLEC may elect either the state specific Commission ordered rates for the service ordering charges, or CLEC may elect the regional service ordering charge, however, CLEC can not obtain a mixture of the two regardless if CLEC has a interconnection contract established in each of the 9 states.															
		OSS - Electronic Service Order Charge, Per Local Service Request (LSR) - Resale Only				SOMEC		3.50	0.00	3.50	0.00						
		OSS - Manual Service Order Charge, Per Local Service Request (LSR) - Resale Only				SOMAN		19.99	0.00	19.99	0.00						
BRANDING - DIRECTORY ASSISTANCE																	
	Branding																
		Recording of DA Custom Branded Announcement						3,000.00	3,000.00								
		Loading of DA Custom Branded Announcement per Switch per OCN						1,170.00	1,170.00								
	Unbranding via OLNS for Wholesale CLEC																
		Loading of DA per OCN (1 OCN per Order)						420.00	420.00								
		Loading of DA per Switch per OCN						16.00	16.00								
BRANDING - OPERATOR CALL PROCESSING																	
	Branding																
		Recording of Custom Branded OA Announcement						7,000.00	7,000.00								
		Loading of Custom Branded OA Announcement per shelf/NAV per OCN						500.00	500.00								
	Unbranding via OLNS for Wholesale CLEC																
		Loading of OA per OCN (Regional)						1,200.00	1,200.00								
ODUF/EODUF SERVICES																	
	OPTIONAL DAILY USAGE FILE (ODUF)																
		ODUF: Recording, per message					0.0000117										
		ODUF: Message Processing, per message					0.004641										
		ODUF: Message Processing, per Magnetic Tape provisioned					48.45										
		ODUF: Data Transmission (CONNECT:DIRECT), per message					0.00010568										
	ENHANCED OPTIONAL DAILY USAGE FILE (EODUF)																
		EODUF: Message Processing, per message					0.250015										

Resale Discounts & Rates - Mississippi														Attachment: 1		Exhibit: D	
CATEGORY		RATE ELEMENTS	Interim	Zone	BCS	USOC	RATES($)					Svc Order Submitted Elec per LSR	Svc Order Submitted Manually per LSR	Incremental Charge - Manual Svc Order vs. Electronic-1st	Incremental Charge - Manual Svc Order vs. Electronic-Add'l	Incremental Charge - Manual Svc Order vs. Electronic-Disc 1st	Incremental Charge - Manual Svc Order vs. Electronic-Disc Add'l
							Rec	Nonrecurring		Nonrecurring Disconnect		OSS Rates($)					
								First	Add'l	First	Add'l	SOMEC	SOMAN	SOMAN	SOMAN	SOMAN	SOMAN
APPLICABLE DISCOUNTS																	
		Residence %					15.75										
		Business %					15.75										
		CSAs %					15.75										
OPERATIONS SUPPORT SYSTEMS (OSS) - "REGIONAL RATES"																	
	NOTE: (1) CLEC should contact its contract negotiator if it prefers the "state specific" OSS charges as ordered by the State Commissions. The OSS charges currently contained in this rate exhibit are the BellSouth "regional" service ordering charges. CLEC may elect either the state specific Commission ordered rates for the service ordering charges, or CLEC may elect the regional service ordering charge, however, CLEC can not obtain a mixture of the two regardless if CLEC has a interconnection contract established in each of the 9 states.															
		OSS - Electronic Service Order Charge, Per Local Service Request (LSR) - Resale Only				SOMEC		3.50	0.00	3.50	0.00						
		OSS - Manual Service Order Charge, Per Local Service Request (LSR) - Resale Only				SOMAN		19.99	0.00	19.99	0.00						
BRANDING - DIRECTORY ASSISTANCE																	
	Branding																
		Recording of DA Custom Branded Announcement						3,000.00	3,000.00								
		Loading of DA Custom Branded Announcement per Switch per OCN						1,170.00	1,170.00								
	Unbranding via OLNS for Wholesale CLEC																
		Loading of DA per OCN (1 OCN per Order)						420.00	420.00								
		Loading of DA per Switch per OCN						16.00	16.00								
BRANDING - OPERATOR CALL PROCESSING																	
	Branding																
		Recording of Custom Branded OA Announcement						7,000.00	7,000.00								
		Loading of Custom Branded OA Announcement per shelf/NAV per OCN						500.00	500.00								
	Unbranding via OLNS for Wholesale CLEC																
		Loading of OA per OCN (Regional)						1,200.00	1,200.00								
ODUF/EODUF SERVICES																	
	OPTIONAL DAILY USAGE FILE (ODUF)																
		ODUF: Recording, per message					0.0000063										
		ODUF: Message Processing, per message					0.004707										
		ODUF: Message Processing, per Magnetic Tape provisioned					49.04										
		ODUF: Data Transmission (CONNECT:DIRECT), per message					0.00010669										
	ENHANCED OPTIONAL DAILY USAGE FILE (EODUF)																
		EODUF: Message Processing, per message					0.250424										

Resale Discounts & Rates - North Carolina														Attachment: 1		Exhibit: D	
CATEGORY		RATE ELEMENTS	Interim	Zone	BCS	USOC	RATES($)					Svc Order Submitted Elec per LSR	Svc Order Submitted Manually per LSR	Incremental Charge - Manual Svc Order vs. Electronic-1st	Incremental Charge - Manual Svc Order vs. Electronic-Add'l	Incremental Charge - Manual Svc Order vs. Electronic-Disc 1st	Incremental Charge - Manual Svc Order vs. Electronic-Disc Add'l
							Rec	Nonrecurring		Nonrecurring Disconnect		OSS Rates($)					
								First	Add'l	First	Add'l	SOMEC	SOMAN	SOMAN	SOMAN	SOMAN	SOMAN
APPLICABLE DISCOUNTS																	
		Residence %					21.50										
		Business %					17.60										
		CSAs %					17.60										
OPERATIONS SUPPORT SYSTEMS (OSS) - "REGIONAL RATES"																	
	NOTE: (1) CLEC should contact its contract negotiator if it prefers the "state specific" OSS charges as ordered by the State Commissions. The OSS charges currently contained in this rate exhibit are the BellSouth "regional" service ordering charges. CLEC may elect either the state specific Commission ordered rates for the service ordering charges, or CLEC may elect the regional service ordering charge, however, CLEC can not obtain a mixture of the two regardless if CLEC has a interconnection contract established in each of the 9 states.															
		OSS - Electronic Service Order Charge, Per Local Service Request (LSR) - Resale Only				SOMEC		3.50	0.00	3.50	0.00						
		OSS - Manual Service Order Charge, Per Local Service Request (LSR) - Resale Only				SOMAN		19.99	0.00	19.99	0.00						
BRANDING - DIRECTORY ASSISTANCE																	
	Branding																
		Recording of DA Custom Branded Announcement						3,000.00	3,000.00								
		Loading of DA Custom Branded Announcement per Switch per OCN						1,170.00	1,170.00								
	Unbranding via OLNS for Wholesale CLEC																
		Loading of DA per OCN (1 OCN per Order)						420.00	420.00								
		Loading of DA per Switch per OCN						16.00	16.00								
BRANDING - OPERATOR CALL PROCESSING																	
	Branding																
		Recording of Custom Branded OA Announcement						7,000.00	7,000.00								
		Loading of Custom Branded OA Announcement per shelf/NAV per OCN						500.00	500.00								
	Unbranding via OLNS for Wholesale CLEC																
		Loading of OA per OCN (Regional)						1,200.00	1,200.00								
ODUF/EODUF SERVICES																	
	OPTIONAL DAILY USAGE FILE (ODUF)																
		ODUF: Recording, per message					0.0003										
		ODUF: Message Processing, per message					0.0032										
		ODUF: Message Processing, per Magnetic Tape provisioned					54.61										
		ODUF: Data Transmission (CONNECT:DIRECT), per message					0.00004										
	ENHANCED OPTIONAL DAILY USAGE FILE (EODUF)																
		EODUF: Message Processing, per message					0.2285406										

Resale Discounts & Rates - South Carolina														Attachment: 1		Exhibit: D	
CATEGORY		RATE ELEMENTS	Interim	Zone	BCS	USOC	RATES($)					Svc Order Submitted Elec per LSR	Svc Order Submitted Manually per LSR	Incremental Charge - Manual Svc Order vs. Electronic-1st	Incremental Charge - Manual Svc Order vs. Electronic-Add'l	Incremental Charge - Manual Svc Order vs. Electronic-Disc 1st	Incremental Charge - Manual Svc Order vs. Electronic-Disc Add'l
							Rec	Nonrecurring		Nonrecurring Disconnect		OSS Rates($)					
								First	Add'l	First	Add'l	SOMEC	SOMAN	SOMAN	SOMAN	SOMAN	SOMAN
APPLICABLE DISCOUNTS																	
		Residence %					14.80										
		Business %					14.80										
		CSAs %					8.98										
OPERATIONS SUPPORT SYSTEMS (OSS) - "REGIONAL RATES"																	
	NOTE: (1) CLEC should contact its contract negotiator if it prefers the "state specific" OSS charges as ordered by the State Commissions. The OSS charges currently contained in this rate exhibit are the BellSouth "regional" service ordering charges. CLEC may elect either the state specific Commission ordered rates for the service ordering charges, or CLEC may elect the regional service ordering charge, however, CLEC can not obtain a mixture of the two regardless if CLEC has a interconnection contract established in each of the 9 states.															
		OSS - Electronic Service Order Charge, Per Local Service Request (LSR) - Resale Only				SOMEC		3.50	0.00	3.50	0.00						
		OSS - Manual Service Order Charge, Per Local Service Request (LSR) - Resale Only				SOMAN		19.99	0.00	19.99	0.00						
BRANDING - DIRECTORY ASSISTANCE																	
	Branding																
		Recording of DA Custom Branded Announcement						3,000.00	3,000.00								
		Loading of DA Custom Branded Announcement per Switch per OCN						1,170.00	1,170.00								
	Unbranding via OLNS for Wholesale CLEC																
		Loading of DA per OCN (1 OCN per Order)						420.00	420.00								
		Loading of DA per Switch per OCN						16.00	16.00								
BRANDING - OPERATOR CALL PROCESSING																	
	Branding																
		Recording of Custom Branded OA Announcement						7,000.00	7,000.00								
		Loading of Custom Branded OA Announcement per shelf/NAV per OCN						500.00	500.00								
	Unbranding via OLNS for Wholesale CLEC																
		Loading of OA per OCN (Regional)						1,200.00	1,200.00								
ODUF/EODUF SERVICES																	
	OPTIONAL DAILY USAGE FILE (ODUF)																
		ODUF: Recording, per message					0.0000216										
		ODUF: Message Processing, per message					0.004704										
		ODUF: Message Processing, per Magnetic Tape provisioned					48.87										
		ODUF: Data Transmission (CONNECT:DIRECT), per message					0.00010863										
	ENHANCED OPTIONAL DAILY USAGE FILE (EODUF)																
		EODUF: Message Processing, per message					0.258301										

Resale Discounts & Rates - Tennessee														Attachment: 1		Exhibit: D	
CATEGORY		RATE ELEMENTS	Interim	Zone	BCS	USOC	RATES($)					Svc Order Submitted Elec per LSR	Svc Order Submitted Manually per LSR	Incremental Charge - Manual Svc Order vs. Electronic-1st	Incremental Charge - Manual Svc Order vs. Electronic-Add'l	Incremental Charge - Manual Svc Order vs. Electronic-Disc 1st	Incremental Charge - Manual Svc Order vs. Electronic-Disc Add'l
							Rec	Nonrecurring		Nonrecurring Disconnect		OSS Rates($)					
								First	Add'l	First	Add'l	SOMEC	SOMAN	SOMAN	SOMAN	SOMAN	SOMAN
APPLICABLE DISCOUNTS																	
		Residence %					16.00										
		Business %					16.00										
		CSAs %					16.00										
OPERATIONS SUPPORT SYSTEMS (OSS) - "REGIONAL RATES"																	
	NOTE: (1) CLEC should contact its contract negotiator if it prefers the "state specific" OSS charges as ordered by the State Commissions. The OSS charges currently contained in this rate exhibit are the BellSouth "regional" service ordering charges. CLEC may elect either the state specific Commission ordered rates for the service ordering charges, or CLEC may elect the regional service ordering charge, however, CLEC can not obtain a mixture of the two regardless if CLEC has a interconnection contract established in each of the 9 states.															
		OSS - Electronic Service Order Charge, Per Local Service Request (LSR) - Resale Only				SOMEC		3.50	0.00	3.50	0.00						
		OSS - Manual Service Order Charge, Per Local Service Request (LSR) - Resale Only				SOMAN		19.99	0.00	19.99	0.00						
BRANDING - DIRECTORY ASSISTANCE																	
	Branding																
		Recording of DA Custom Branded Announcement						3,000.00	3,000.00	7.03	7.03			20.35	10.54	13.32	1.40
		Loading of DA Custom Branded Announcement per Switch per OCN						1,170.00	1,170.00					20.35	10.54		
	Unbranding via OLNS for Wholesale CLEC																
		Loading of DA per OCN (1 OCN per Order)						420.00	420.00					20.35	10.54		
		Loading of DA per Switch per OCN						16.00	16.00					20.35	10.54		
BRANDING - OPERATOR CALL PROCESSING																	
	Branding																
		Recording of Custom Branded OA Announcement						7,000.00	7,000.00					19.99	19.99	19.99	19.99
		Loading of Custom Branded OA Announcement per shelf/NAV per OCN						500.00	500.00					19.99	19.99		
	Unbranding via OLNS for Wholesale CLEC																
		Loading of OA per OCN (Regional)						1,200.00	1,200.00					19.99	19.99		
ODUF/EODUF SERVICES																	
	OPTIONAL DAILY USAGE FILE (ODUF)																
		ODUF: Recording, per message					0.0000044										
		ODUF: Message Processing, per message					0.002446										
		ODUF: Message Processing, per Magnetic Tape provisioned					35.54										
		ODUF: Data Transmission (CONNECT:DIRECT), per message					0.0000339										
	ENHANCED OPTIONAL DAILY USAGE FILE (EODUF)																
		EODUF: Message Processing, per message					0.229779										

Attachment 2

Network Elements and Other Services

TABLE OF CONTENTS

1 GENERAL 3

2 LOOPS 8

3 LINE SPLITTING 33

4 LOCAL SWITCHING 36

5 UNBUNDLED NETWORK ELEMENT COMBINATIONS 45

6 DEDICATED TRANSPORT AND DARK FIBER TRANSPORT 50

7 CALL RELATED DATABASES AND SIGNALING 56

8 ALI/DMS 67

9 CALLING NAME (CNAM) DATABASE SERVICE 67

10 SERVICE CREATION ENVIRONMENT AND SERVICE MANAGEMENT SYSTEM (SCE/SMS) ADVANCED INTELLIGENT NETWORK ACCESS (AIN TOOL KIT) 69

11 OPERATION SUPPORT SYSTEMS (OSS) 70

Rates ..... Exhibit A

Rates ..... Exhibit B

ACCESS TO NETWORK ELEMENTS AND OTHER SERVICES

1 General

1.1 This Attachment sets forth rates, terms and conditions for Unbundled Network Elements (UNEs) and combinations of UNEs with other UNEs (Combinations) that BellSouth shall offer to KMC III in accordance with its obligations under Section 251(c)(3) of the Act. Additionally, this Attachment sets forth the rates, terms and conditions for other facilities and services BellSouth makes available to KMC III (Other Services). The rates for each UNE, Combination and Other Services are set forth in Exhibits A and/or B of this Attachment. In providing access or obtaining access to UNEs, Combinations and Other Services, the Parties shall comply with all applicable FCC rules and orders and Commission rules and orders.

1.1.1 Network Element is as defined in the FCC's rules.

1.1.2 Technically Feasible is as defined in the FCC's rules.

1.1.3 UNE is defined to mean the Network Elements that BellSouth is required to make available on an unbundled basis by the FCC or Commission pursuant to Section 251(c)(3) of the Act, FCC rules and orders and/or Commission rules and orders that are set forth in this Attachment.

1.2 BellSouth shall provide and KMC III may access UNEs and Other Services in accordance with all applicable FCC and Commission rules and orders, including but not limited to: 47 C.F.R. §§ 51.307, 51.309, 51.311, 51.313, 51.315, 51.316, 51.318, 51.319.

1.3 BellSouth shall comply with the requirements set forth in the technical references identified in this Attachment. Such requirements shall be applied in a non-discriminatory manner and at parity and shall be in accord with all FCC and Commission requirements.

1.4 KMC III shall not obtain a Network Element for the exclusive provision of mobile wireless services or interexchange services.

1.5 <u>Conversions</u>

1.5.1 Upon request, BellSouth shall convert a wholesale service, or group of wholesale services, to the equivalent UNE, or Combination and shall convert a UNE or a Combination to an equivalent wholesale service or group of wholesale services in accordance with FCC 47 C.F.R. § 51.316 (Conversion). Nonrecurring switch-as-is rates for such Conversions are contained in Exhibit A. Conversions shall be considered termination for purposes of any volume and/or term commitments and/or grandfathered status-applicable to such converted services. Any change from a wholesale service/group of wholesale services to a

UNE/Combination, or vice versa, that requires a physical rearrangement of the UNE/Combination or wholesale/group of wholesale services will not be considered a Conversion for purposes of this Agreement. For arrangements that require a re-termination or other physical rearrangement of circuits to comply with the terms of this Agreement, nonrecurring charges for the UNE or Combination or cross connect from Exhibit A will apply. For arrangements that require a re-termination or other physical rearrangement of circuits to comply with the terms of the tariff or contract governing the wholesale service(s), nonrecurring charges for the wholesale service/wholesale services from such tariff or contract will apply. BellSouth will not require physical rearrangement if the Conversion can be completed through record changes only.

1.5.2 Any price changes resulting from the Conversion will be effective as of the next billing cycle following BellSouth's receipt of a complete and accurate Conversion request from KMC III. The fact that the Parties have agreed to this Section 1.5.2 shall not be used by either Party against the other in any dispute raised prior to the Effective Date of this Agreement regarding the effective date for billing changes resulting from a Conversion; provided, however, that this provision does not preclude either Party from making any arguments based on the FCC's decision in the TRO in any such dispute.

1.5.3 If KMC III wants to convert a UNE or Combination (or part thereof) to wholesale services KMC III shall submit a spreadsheet (and a commingling ordering document that indicates which part is to be filled as a UNE, if applicable). BellSouth shall charge KMC III the same nonrecurring switch-as-is charge found in Exhibit A for the Conversion of a single UNE as it does for a Combination.

1.6 Except to the extent expressly provided otherwise in this Attachment, KMC III may not maintain UNEs or Combinations that are no longer offered pursuant to this Agreement (collectively "Arrangements"). In the event BellSouth identifies non-compliant Arrangements, BellSouth shall provide KMC III thirty (30) days written notice of BellSouth's intent to disconnect or convert such Arrangements. If KMC III fails to submit orders to disconnect or convert such Arrangements within such thirty (30) day period, BellSouth will transition such circuits to the equivalent tariffed BellSouth service(s). Those circuits identified and transitioned by BellSouth pursuant to this Section 1.6 shall be subject to all applicable disconnect charges as set forth in this Agreement and the full nonrecurring charges for installation of the equivalent tariffed BellSouth service as set forth in BellSouth's tariffs. The applicable recurring tariff charge shall apply to each circuit as of the Effective Date of this Agreement.

1.7 When submitting an order pursuant to this Agreement for high capacity (DS1 or above) Dedicated Transport or high capacity Loops KMC III self-certifies that to the best of KMC III's knowledge, the high capacity Dedicated Transport or high capacity Loop requested is available as a Network Element pursuant to this Agreement. Upon receiving such order, BellSouth shall process the request in

reliance upon KMC III's self-certification. To the extent BellSouth believes that such request does not comply with the terms of this Agreement, BellSouth shall seek dispute resolution in accordance with the General Terms and Conditions of this Agreement. Notwithstanding anything to the contrary provided in this Agreement, any dispute between the Parties related to KMC III's self certification and whether high capacity Dedicated Transport or Loops are available as Network Elements in a particular wire center shall be brought to the FCC for resolution. In the event such dispute is resolved in BellSouth's favor, BellSouth shall bill KMC III the difference between the rates for such circuits pursuant to this Agreement and the applicable nonrecurring and recurring charges for the equivalent tariffed service from the date of installation to the date the circuit is transitioned to the equivalent tariffed service. Within thirty (30) days following a decision finding in BellSouth's favor, KMC III shall submit a spreadsheet identifying those non-compliant circuits to be transitioned to tariffed services or disconnected.

1.8 KMC III may utilize UNEs and Other Services in a manner consistent with applicable industry standards and applicable BellSouth Technical References incorporated into BellSouth's Guides found on BellSouth's Web site at http://interconnection.bellsouth.com. In the event that KMC III perceives that BellSouth Technical References include provisions that unreasonably limit KMC III's ability to access and utilize UNEs in accordance with this Attachment, KMC III shall notify BellSouth and the Parties shall attempt to resolve the issue. If the Parties are unable to resolve the issue, the dispute shall be handled in accordance with the dispute resolution provisions in Section 13 of the General Terms and Conditions of this Agreement.

1.9 <u>Routine Network Modifications (RNMs)</u>

1.9.1 BellSouth will perform RNMs in accordance with FCC 47 C.F.R. § 51.319 (a)(7) and (e)(4). Except to the extent expressly provided otherwise in this Attachment, if BellSouth has anticipated such RNMs and performs them during normal operations and such function was included in BellSouth's cost studies that, through Commission proceedings or agreement by the Parties resulted in rates set forth in Exhibit A, then BellSouth shall perform such RNMs at no additional charge**.** RNMs shall be performed within the intervals established for the UNE and subject to the performance measurements and associated remedies set forth in Attachment 9 of this Agreement to the extent such RNMs were anticipated in the setting of such intervals. If BellSouth has not anticipated a requested network modification as being a RNM and has not recovered the costs of such RNM in the rates set forth in Exhibit A, then KMC III must submit a LSR to have the work performed. Each request will be handled as a project on an individual case basis until such time as BellSouth incorporates such RNM into its normal operations and develops a charge for such RNM that is included in this Agreement by Amendment hereto. If KMC III believes that a RNM should be incorporated into BellSouth's normal operations and BellSouth disagrees with such determination, the dispute shall be resolved pursuant to the resolution of disputes provision of the General

Terms and Conditions. BellSouth will provide a price quote for the request, and upon receipt of payment from KMC III, BellSouth shall perform the RNM. If KMC III believes that BellSouth's firm price quote is not consistent with the requirements of the Act, either Party may seek dispute resolution in accordance with the dispute resolution provisions set forth in the General Terms and Conditions of this Agreement. While the dispute is pending, KMC III shall have the option of requesting BellSouth to perform the RNM subject to a retroactive pricing true-up upon an effective Commission order resolving the dispute. The Parties agree that subsequent true-ups may result from multiple rounds of appellate or reconsideration decisions, should the relevant Party pursue such appeals/reconsiderations/review and prevail. BellSouth will provide a cost study upon request after the firm quote.

1.10 Notwithstanding any other provision of this Agreement, BellSouth will not commingle UNEs or Combinations with any service, Network Element or other offering that it is obligated to make available only pursuant to Section 271 of the Act. Nothing in this Section shall prevent KMC III from commingling Network Elements with other wholesale services that do not constitute services, Network Elements or Other Services that BellSouth is willing to make available only pursuant to Section 271 of the Act.

1.11 <u>Commingling of Services</u>

1.11.1 BellSouth shall provide commingling of services in accordance with 47 C.F.R. § 51.309.

1.11.2 BellSouth will not "ratchet" (i.e., billing a single circuit at multiple rates to develop a single, blended rate for) a commingled circuit. Unless otherwise agreed to by the Parties, the UNE portion of such circuit will be billed at the rates set forth in this Agreement and the remainder of the circuit or service will be billed in accordance with BellSouth's tariffed or other contract rates.

1.11.3 When multiplexing equipment is attached to a commingled circuit, the multiplexing equipment will be billed from the same jurisdictional authorization (agreement or tariff) as the higher bandwidth service. The Central Office Channel Interface will be billed from the same jurisdictional authorization (tariff or agreement) as the lower bandwidth service.

1.11.4 If KMC III reports a trouble on a UNE or Other Service and no trouble actually exists on the BellSouth portion, BellSouth will charge KMC IIIat the rates set forth in Exhibit A for any dispatching and testing (both inside and outside the Central Office (CO)) required by BellSouth in order to confirm the working status. If KMC III reports the same trouble on the same UNE or Other Service within thirty (30) days of BellSouth's notification to KMC III of its disposition of the prior trouble, and BellSouth is able to determine that such trouble does exist on

BellSouth's network, KMC III shall be credited on the next billing cycle for charges associated with the prior trouble.

1.12 Rates

1.12.1 The prices that KMC III shall pay to BellSouth for UNEs, Combinations and Other Services are set forth in Exhibits A and/or B of this Attachment. To the extent a rate is required to be TELRIC-compliant, the rate in Exhibit A shall be TELRIC-compliant, and if Commission approved, is the Commission approved rates. If KMC III purchases a service(s) from a tariff, all terms and conditions and rates as set forth in such tariff shall apply. If no rate is identified in this Agreement for an UNE, Combination or Other Service that is required to be a TELRIC-compliant rate, the rate will be a TELRIC-compliant rate set by the Commission, or if no such rate has been set by a Commission, BellSouth shall propose an interim TELRIC-compliant rate based upon a cost study that BellSouth will provide upon request from KMC III. If the rate is not required to be TELRIC-compliant, then the rate may be negotiated by the Parties upon request by either Party. If the Parties are unable to agree upon a rate, either Party may pursue dispute resolution.

1.12.2 Rates, terms and conditions for order cancellation charges and Service Date Advancement Charges will apply in accordance with Attachment 6 of this Agreement. Service Date Advancement charges for expediting UNEs and Other Services orders and are as set forth in Exhibit A.

1.12.3 If KMC III modifies an order (Order Modification Charge (OMC)) after being sent a Firm Order Confirmation (FOC) from BellSouth, any costs incurred by BellSouth to accommodate the modification will be paid by KMC III in accordance with the rates set forth in Exhibit A.

1.12.4 Fractionalized billing shall apply to all UNEs and Combinations such that recurring charges will be prorated based upon the number of days that the UNEs are in service. Nonrecurring charges shall not be fractionalized.

2 Unbundled Loops

2.1 General

2.1.1 BellSouth shall provide KMC III with nondiscriminatory access to the local loop on an unbundled basis, in accordance with 47 C.F.R. § 51.319(a). The various Loops that BellSouth currently offers and is required to make available are set forth herein.

2.1.1.1 For the purposes of this Agreement, and not by way of limitation, the phrase 'end user customer premises' as used in 47 C.F.R. §51.319(a) shall no be interpreted to include such places as a carrier's mobile switching center, base station, cell site, or other similar facility, except to the extent that a carrier may require loops to such

locations for the purpose of providing telecommunications services to its personnel at those locations.

2.1.1.2 When KMC III is purchasing a Loop, KMC III shall purchase the entire bandwidth of the Loop and, except as required herein or as otherwise agreed to by the Parties, BellSouth shall not subdivide the frequency of the Loop.

2.1.2 The loop shall include the use of all test access functionality, including without limitation, smart jacks, for both voice and data.

2.1.3 The provisioning of a Loop to KMC III's collocation space will require BellSouth to provide cross office cabling and cross connections within the central office to connect the Loop to the demarcation point associated with the collocation space. These cross connects are separate components that are not considered a part of the Loop, and thus, have a separate TELRIC charge as set forth in Exhibit A of Attachment 4.

2.1.4 Where facilities are available, BellSouth will install Loops in compliance with BellSouth's Products and Services Interval Guide available at the Web site at http://www.interconnection.bellsouth.com. For orders of fifteen (15) or more Loops, the installation and any applicable Order Coordination (OC) as described below will be handled on a project basis, and reasonable and nondiscriminatory intervals will be set by the BellSouth project manager for that order. When Loops require a Service Inquiry (SI) prior to issuing the order to determine if facilities are available, the interval for the SI process is separate from the installation interval.

2.1.5 The Loop shall be provided to KMC III in accordance with this Agreement and the reasonable and nondiscriminatory technical provisions set forth in BellSouth's TR73600 Unbundled Local Loop Technical Specification and applicable industry standard technical references.

2.1.6 BellSouth will provision, maintain and repair the Loops to the standards that are consistent with the type of Loop ordered.

2.1.7 When a BellSouth technician is required to be dispatched to provision the Loop, BellSouth will tag the Loop with the Circuit ID number and the name of the ordering CLEC. When a dispatch is not required to provision the Loop, BellSouth will tag the Loop on the next required premises visit. If KMC III wants to ensure the Loop is tagged during the provisioning process for Loops that may not require a dispatch (e.g., UVL-SL1, UVL-SL2, and UCL-ND), KMC III may order Loop Tagging. Rates for Loop Tagging are as set forth in Exhibit A.

2.2 <u>Transition for DS1 and DS3 Loops in Non-Impaired Wire Centers</u>

2.2.1 For purposes of this Section 2, the Transition Period for the Embedded Base of DS1 and DS3 Loops and for the Excess DS1 and DS3 Loops (defined in 2.2.3) is

the twelve (12) month period beginning March 11, 2005 and ending March 10, 2006.

2.2.2 For purposes of this Section 2, Embedded Base means DS1 and DS3 Loops that were in service for KMC III as of March 10, 2005, or which have been added subsequent to March 10, 2005 pursuant to Section 1.7 of this Attachment, in those wire centers that, as of such date, met the criteria set forth in 2.2.5.1 or 2.2.5.2. Subsequent disconnects or loss of customers shall be removed from the Embedded Base.

2.2.3 Excess DS1 and DS3 Loops are those KMC III DS1 and DS3 Loops in service as of March 10, 2005, in excess of the caps set forth in Sections 2.3.4.1 and 2.3.5.1, respectively. Subsequent disconnects or loss of End Users shall be removed from Excess DS1 and DS3 Loops.

2.2.4 For purposes of this Section 2, a Business Line is defined in 47 C.F.R. § 51.5.

2.2.5 Notwithstanding anything to the contrary in this Agreement, and except as set forth in Section 2.2.12, BellSouth shall make available DS1 and DS3 Loops as described in this Section 2.2 only for KMC III's Embedded Base during the Transition Period:

2.2.5.1 DS1 Loops at any location within the service area of a wire center containing 60,000 or more Business Lines and four (4) or more fiber-based collocators.

2.2.5.2 DS3 Loops at any location within the service area of a wire center containing 38,000 or more Business Lines and four (4) or more fiber-based collocators.

2.2.6 A list of wire centers meeting the criteria set forth in Section 2.2.5 above as of March 10, 2005, is available on BellSouth's Interconnection Services Web site at www.interconnection.bellsouth.com.

2.2.7 Notwithstanding the Effective Date of this Agreement, during the Transition Period, the rates for KMC III's Embedded Base of DS1 and DS3 Loops and KMC III's Excess DS1 and DS3 Loops described in this Section 2.2 shall be as set forth in Exhibit B.

2.2.8 The Transition Period shall apply only to (1) KMC III's Embedded Base and (2) KMC III's Excess DS1 and DS3 Loops. KMC III shall not add new DS1 or DS3 loops as described in this Section 2.2 pursuant to this Agreement, except pursuant to the self-certification process as set forth in Section 1.7 of this Attachment and as set forth in Section 2.2.12 below.

2.2.9 Once a wire center exceeds both of the thresholds set forth in Sections 2.2.5.1 and 2.2.5.2, no future DS1 Loop unbundling will be required in that wire center.

2.2.10 Once a wire center exceeds both of the thresholds set forth in Sections 2.2.5.1 and 2.2.5.2, no future DS3 Loop unbundling will be required in that wire center.

2.2.11 No later than December 9, 2005 KMC III shall submit spreadsheet(s) identifying all of the Embedded Base of circuits and Excess DS1 and DS3 Loops to be either disconnected or converted to other BellSouth services pursuant to Section 1.5. The Parties shall negotiate a project schedule for the Conversion of the Embedded Base and Excess DS1 and DS3 Loops.

2.2.11.1 If KMC III fails to submit the spreadsheet(s) specified in Section 2.2.11 above for all of its Embedded Base and Excess DS1 and DS3 Loops prior to December 9, 2005, BellSouth will identify KMC III's remaining Embedded Base and Excess DS1 and DS3 Loops, if any, and will transition such circuits to the equivalent tariffed BellSouth service(s). Those circuits identified and transitioned by BellSouth pursuant to this Section 2.2.11.1 shall be subject to all applicable disconnect charges as set forth in this Agreement and the full nonrecurring charges for installation of the equivalent tariffed BellSouth service as set forth in BellSouth's tariffs.

2.2.11.2 For Embedded Base circuits and Excess DS1 and DS3 Loops converted pursuant to Section 2.2.11 or transitioned pursuant to 2.2.11.1, the applicable recurring tariff charge shall apply to each circuit as of the earlier of the date each circuit is converted or transitioned, as applicable, or March 11, 2006.

2.2.12 <u>Modifications and Updates to the Wire Center List and Subsequent Transition Periods</u>

2.2.12.1 In the event BellSouth identifies additional wire centers that meet the criteria set forth in Section 2.2.5, but that were not included in the Initial Wire Center List, BellSouth shall include such additional wire centers in a carrier notification letter ("CNL"). Each such list of additional wire centers shall be considered a "Subsequent Wire Center List".

2.2.12.2 Effective ten (10) business days after the date of a BellSouth CNL providing a Subsequent Wire Center List, BellSouth shall not be required to unbundle DS1 and/or DS3 Loops, as applicable, in such additional wire center(s), except pursuant to the self-certification process as set forth in Section 1.7 of this Attachment.

2.2.12.3 For purposes of Section 2.2.12, BellSouth shall make available DS1 and DS3 Loops that were in service for KMC III in a wire center on the Subsequent Wire Center List as of the tenth (10th) business day after the date of BellSouth's CNL identifying the Subsequent Wire Center List ("Subsequent Embedded Base") until ninety (90) days after the tenth (10th) business day from the date of BellSouth's CNL identifying the Subsequent Wire Center List ("Subsequent Transition Period").

2.2.12.4 Subsequent disconnects or loss of End Users shall be removed from the Subsequent Embedded Base.

2.2.12.5 The rates set forth in Exhibit B shall apply to the Subsequent Embedded Base during the Subsequent Transition Period.

2.2.12.6 No later than forty (40) days from BellSouth's CNL identifying the Subsequent Wire Center List KMC III shall submit a spreadsheet(s) identifying the Subsequent Embedded Base of circuits to be disconnected or converted to other BellSouth services. The Parties shall negotiate a project schedule for the Conversion of the Subsequent Embedded Base.

2.2.12.6.1 If KMC III fails to submit the spreadsheet(s) specified in Section 2.2.12.6 above for all of its Subsequent Embedded Base, within forty (40) days after the date of BellSouth's CNL identifying the Subsequent Wire Center List, BellSouth will identify KMC III's remaining Subsequent Embedded Base, if any, and will transition such circuits to the equivalent tariffed BellSouth service(s). Those circuits identified and transitioned by BellSouth shall be subject to the applicable disconnect charges as set forth in this Agreement and the full nonrecurring charges for installation of the equivalent tariffed BellSouth service as set forth in BellSouth's tariffs.

2.2.12.6.2 For Subsequent Embedded Base circuits Converted pursuant to Section 2.2.12.6 or transitioned pursuant to Section 2.2.12.6.1, the recurring tariff charges shall apply as of the earlier of the date each circuit is converted or transitioned, as applicable, or the first day after the end of the Subsequent Transition Period.

2.3 Loops

2.3.1 Copper Loops. BellSouth will provide access to unbundled Copper Loops as required in 47 C.F.R § 51.319(a)(1).

2.3.2 Hybrid Loops. BellSouth will provide access to unbundled Hybrid Loops as required in 47 C.F.R § 51.319(a)(2).

2.3.3 BellSouth will provide access to unbundled Fiber-to-the-Home loops as required in 47. C.F.R. § 51.319(a)(3). FTTH facilities include fiber loops deployed to the minimum point of entry (MPOE) of a multiple dwelling unit (MDU) that is predominantly residential, regardless of the ownership of the inside wiring from the MPOE to each user in the MDU.

2.3.4 DS1 loops. A DS1 loop is a digital local loop having a total digital signal speed of 1.544 megabytes (Mbps) per second. DS1 loops include, but are not limited to, two-wire and four-wire copper loops capable of providing high-bit rate digital subscriber line services, including T1 services.

2.3.4.1 BellSouth shall not provide more than ten (10) unbundled DS1 Loops to KMC III at any single building in which DS1 Loops are available as unbundled Loops.

2.3.5 DS3 loops. A DS3 loop is a digital local loop having a total digital signal speed of 44.736 Mbps per second.

2.3.5.1 KMC III may obtain a maximum of a single Unbundled DS3 Loop to any single building in which DS3 Loops are available as Unbundled Loops.

2.3.6 Dark Fiber Loops. Dark Fiber Loop is fiber within an existing fiber optic cable that has not been activated through the use of optronics to render it capable of carrying communications services that extends from the demarcation point at a customer's premises and the BellSouth central office. Dark Fiber Loops may be strands of optical fiber existing in aerial or underground structure.

2.4 Loop Testing/Trouble Reporting

2.4.1 KMC III will be responsible for testing and isolating troubles on the Loops. KMC III must test and isolate trouble to the BellSouth portion of a designed/non-designed unbundled Loop (e.g., UVL-SL2, UCL-D, UVL-SL1, UCL-ND, etc.) before reporting repair to the UNE Customer Wholesale Interconnection Network Services (CWINS) Center. Upon request from BellSouth at the time of the trouble report, KMC III will be required to provide the results of the KMC III test which indicate a problem on the BellSouth provided Loop.

2.4.2 Once KMC III has isolated a trouble to the BellSouth provided Loop, and had issued a trouble report to BellSouth on the Loop, BellSouth will take the actions necessary to repair the Loop if a trouble actually exists. BellSouth will repair these Loops in a reasonable and nondiscriminatory manner and in time frames that are as favorable as those in which BellSouth repairs similarly situated Loops to its customers.

2.4.3 If KMC III reports a trouble on a non-designed or designed Loop and no trouble actually exists, BellSouth will charge KMC III for any dispatching and testing (both inside and outside the CO) required by BellSouth in order to confirm the Loop's working status. BellSouth will assess the applicable Maintenance of Service Charge rates from BellSouth's FCC No. 1, Section 13.3.1 for designed circuits, Section A4.3.1 of the GSSTs for Alabama, Kentucky, Louisiana, Mississippi and Tennessee where trouble determination for non-designed circuits is covered under premises work charges, Section A15.4.1 of the GSSTs for Florida and North Carolina where trouble determination for non-designed circuits is covered under trouble location charges, and Section N1.1.2 of the Non-Regulated Services Pricing tariff for Georgia and South Carolina where trouble determination for non-designed circuits is covered under trouble determination charges. If KMC III reports the same trouble on the same UNE Loop within thirty (30) days of BellSouth's notification to KMC III of its disposition of the prior trouble, and BellSouth is able to determine that such trouble does exist on BellSouth's

network, KMC III shall be credited on the next billing cycle for charges associated with the prior trouble.

2.4.4 In the event BellSouth must dispatch to the customer's location more than once due to incorrect or incomplete information provided by KMC III (e.g., incomplete address, incorrect contact name/number, etc.), BellSouth will bill KMC III for each additional dispatch required to repair the circuit due to the incorrect/incomplete information provided, in accordance with rates set forth in Exhibit A.

2.4.5 BellSouth shall test all Loops at parity in a nondiscriminatory manner. The results of such testing, to the extent available, shall be provided to KMC III upon request.

2.5 OC and Order Coordination-Time Specific (OC-TS)

2.5.1 OC allows BellSouth and KMC III to coordinate the installation of the SL2 Loops, Unbundled Digital Loops (UDL) and other Loops where OC may be purchased as an option, to KMC III's facilities to limit customer service outage. OC is available when the Loop is provisioned over an existing circuit that is currently providing service to the customer. OC for physical conversions will be scheduled at BellSouth's discretion during normal working hours on the committed due date. OC shall be provided in accordance with the chart set forth below.

2.5.2 OC-TS allows KMC III to order a specific time for OC to take place. BellSouth will make every effort to accommodate KMC III's specific conversion time request. However, BellSouth reserves the right to negotiate with KMC III a conversion time based on load and appointment control when necessary. This OC-TS is a chargeable option for all Loops except Unbundled Copper Loops (UCL) and is billed in addition to the OC charge. KMC III may specify a time between 9:00 a.m. and 4:00 p.m. (location time) Monday through Friday (excluding holidays). If KMC III specifies a time outside this window, or selects a time or quantity of Loops that requires BellSouth technicians to work outside normal work hours, overtime charges will apply in addition to the OC and OC-TS charges. Overtime charges will be applied based on the amount of overtime worked and in accordance with the rates established in BellSouth's Access Services Tariff, Section E13.2, for each state. The OC-TS charges for an order due on the same day at the same location will be applied on a per Local Service Request (LSR) basis.

2.5.3 For a coordinated conversion, i.e., to LNP with loop or to stand alone loop where OC is provided for in this agreement, BellSouth shall verbally coordinate the disconnect with KMC III and perform any switch translations so as to limit customer service outage. When OC is provided, BellSouth will call KMC III twenty-four (24) to forty-eight (48) hours prior to the actual conversion to ensure KMC III will be ready on the due date and to review the details of the cutover.

KMC III may designate the conversion time when the conversion involves a loop with LNP by ordering Time Specific conversion at rates designated in this agreement. For Time Specific conversions, BellSouth and KMC IIIshall mutually agree upon cut over time and BellSouth will verify the cut over time designated by KMC III twenty-four (24) to forty-eight (48) hours in advance to ensure that the conversion is to be completed as ordered. Both Parties will use best efforts to ensure that conversions will commence within fifteen (15) minutes of the established time, with the exception of conversions involving IDLC where the Commission has granted extended conversion windows. For coordinated conversions, BellSouth's target interval for service disruption to the customer is fifteen (15) minutes or less.

	Order Coordination (OC)	**Order Coordination – Time Specific (OC-TS)**	**Test Points**	**DLR**	**CHARGE FOR DISPATCH AND TESTING IF NO TROUBLE FOUND**
SL-1 **(Non-Designed)**	Chargeable Option	Chargeable Option	Not available	Chargeable Option – ordered as Engineering Information Document	Charged for Dispatch inside and outside Central Office
UCL-ND **(Non-Designed)**	Chargeable Option	Not Available	Not Available	Chargeable Option – ordered as Engineering Information Document	Charged for Dispatch inside and outside Central Office
Unbundled Voice Loops - SL-2 (including 2- and 4-wire UVL) (Designed)	Included	Chargeable Option	Included	Included	Charged for Dispatch outside Central Office
Unbundled Digital Loop (Designed)	Included	Chargeable Option (except on Universal Digital Channel)	Included (where appropriate)	Included	Charged for Dispatch outside Central Office
Unbundled Copper Loop **(DESIGNED)**	Chargeable in accordance with Section 2	Not available	Included	Included	Charged for Dispatch outside Central Office
For UVL-SL1 and UCLs, KMC III must order and will be billed for both OC and OC-TS if					

requesting OC-TS.

2.6 CLEC to CLEC Conversions for Unbundled Loops

2.6.1 The CLEC to CLEC conversion process, located on BellSouth's Web site at http://www.interconnection.bellsouth.com/guides/unedocs/c2c.pdf, for unbundled Loops may be used by KMC III when converting an existing unbundled Loop from another CLEC for the same customer. The Loop type being converted must be included in KMC III's Interconnection Agreement before requesting a conversion.

2.6.2 To utilize the CLEC to CLEC conversion process, the Loop being converted must be the same Loop type with no requested changes to the Loop, must serve the same customer location from the same serving wire center, and must not require an outside dispatch to provision.

2.6.3 The Loops converted to KMC III pursuant to the CLEC to CLEC conversion process shall be provisioned in the same manner and with the same functionality and options as described in this Attachment for the specific Loop type.

2.7 Bulk Migration

2.7.1 If KMC III requests to migrate twenty-five (25) or more UNE-Port/Loop Combination (UNE-P) customers to UNE-Loop (UNE-L) in the same Central Office on the same due date, KMC III must use the Bulk Migration process, which is described in the BellSouth CLEC Information Package, "UNE-Port/Loop Combination (UNE-P) to UNE-Loop (UNE-L) Bulk Migration" located at BellSouth's Web site: http://interconnection.bellsouth.com/guides/unedocs/BulkManpkg.pdf. The rates for the Bulk Migration process shall be the nonrecurring rates associated with the Loop type being requested in the Bulk Migration asset forth in Exhibit A. Additionally, an electronic OSS charges will apply for each customer account subject to the Bulk Migration Request. The migration of loops from Integrated Digital Loop Carrier (IDLC) will be done pursuant to Section 2.13.1 below.

2.8 Ordering Guidelines and Processes

2.8.1 Ordering and provisioning for UNEs and Other Services shall be as set forth in Attachment 6 of this Agreement.

2.8.2 Additional UNE product information may also be found in the individual CLEC Information Packages found on the "CLEC UNE Products" BellSouth's Web site located at http://www.interconnection.bellsouth.com/guides/html/unes.html.

2.9 Unbundled Voice Loops (UVLs)

2.9.1 BellSouth shall make available the following UVLs:

2.9.1.1 2-wire Analog Voice Grade Loop – SL1 (Non-Designed)

2.9.1.2 2-wire Analog Voice Grade Loop – SL2 (Designed)

2.9.1.3 4-wire Analog Voice Grade Loop (Designed)

2.9.2 UVL may be provisioned using any type of facility that will support voice grade services. This may include loaded copper, non-loaded copper, digital loop carrier systems, fiber/copper combination (hybrid loop) or a combination of any of these facilities. BellSouth, in the normal course of maintaining, repairing, and configuring its network, may also change the facilities that are used to provide any given voice grade circuit. This change may occur at any time and shall result in no voice grade service disruption or degradation to the customer. In these situations, BellSouth will ensure that the newly provided facility will support a 64 kbps channel capable of supporting voice grade services. BellSouth will not guarantee that KMC III will be able to continue to provide any advanced services over the new facility. BellSouth will offer UVL in two (2) different service levels - Service Level One (SL1) and Service Level Two (SL2).

2.9.2.1 Unbundled Voice Loop - SL1 (UVL-SL1). Loops are 2-wire Loop start circuits, will be non-designed, and will not have remote access test points. OC will be offered as a chargeable option on SL1 Loops when reuse of existing facilities has been requested by KMC III. KMC III may also order OC-TS when a specified conversion time is requested. OC-TS is a chargeable option for any coordinated order and is billed in addition to the OC charge. An Engineering Information (EI) document can be ordered as a chargeable option. The EI document provides Loop MakeUp (LMU) information, which is similar to the information normally provided in a Design Layout Record (DLR). Upon issuance of a non-coordinated order in the service order system, SL1 Loops will be activated on the due date in the same manner and time frames that BellSouth normally activates POTS-type Loops for its customers. For SL1 orders that include the OC option, BellSouth will use best efforts to notify KMC III within thirty (30) minutes of the completion of the physical wire work.

2.9.2.1.1 For an additional charge BellSouth will make available additional Loop Testing so that KMC III may request further testing on new UVL-SL1 Loops. Rates for additional Loop Testing are as set forth in Exhibit A.

2.9.2.2 Unbundled Voice Loop – SL2 (UVL-SL2). Loops may be 2-wire or 4-wire circuits, shall have remote access test points, and will be designed with a DLR provided to KMC III. SL2 circuits can be provisioned with loop start, ground start or reverse battery signaling. OC is provided as a standard feature on SL2 Loops. The OC feature will allow KMC III to coordinate the installation of the Loop with the disconnect of an existing customer's service and/or number portability service. In these cases, BellSouth will perform the order conversion

with standard order coordination at BellSouth's discretion during normal work hours.

2.10 Unbundled Digital Loops

2.10.1 BellSouth will offer Unbundled Digital Loops (UDL). UDLs are service specific, will be designed, will be provisioned with test points (where appropriate), and will come standard with OC and a DLR. The various UDLs are intended to support a specific digital transmission scheme or service.

2.10.2 BellSouth shall make available the following UDLs as set forth below:

2.10.2.1 2-wire Unbundled ISDN Digital Loop

2.10.2.2 2-wire Unbundled ADSL Compatible Loop

2.10.2.3 2-wire Unbundled HDSL Compatible Loop

2.10.2.4 4-wire Unbundled HDSL Compatible Loop

2.10.2.5 4-wire Unbundled DS1 Digital Loop

2.10.2.6 4-wire Unbundled Digital Loop/DS0 – 64 kbps, 56 kbps and below

2.10.2.7 DS3 Loop

2.10.2.8 STS-1 Loop

2.10.3 2-Wire Unbundled ISDN Digital Loops will be provisioned according to industry standards for 2-Wire Basic Rate ISDN services and will come standard with a test point, OC, and a DLR. KMC III will be responsible for providing BellSouth with a Service Profile Identifier (SPID) associated with a particular ISDN-capable Loop and customer. With the SPID, BellSouth will be able to adequately test the circuit and ensure that it properly supports ISDN service. When ISDN Loops are provisioned using a Digital Loop Carrier (DLC) system, BellSouth will ensure that the Loops are provisioned on time slots that are compatible with data-only services such as IDSL.

2.10.3.1 Upon the Effective Date of this Agreement, Universal Digital Channel (UDC) elements will no longer be offered by BellSouth and no new orders for UDC will be accepted. Any existing UDCs that were provisioned prior to the Effective Date of this Agreement will be grandfathered at the rates set forth in the Parties' interconnection agreement that was in effect immediately prior to the Effective Date of this Agreement. Existing UDCs that were provisioned prior to the Effective Date of this Agreement may remain connected, maintained and repaired according to BellSouth's TR73600 until such time as they are disconnected by KMC IIIor BellSouth provides ninety (90) days notice that such UDC must be

terminated at which point the Parties will coordinate the transition in a cooperative manner. KMC III may order an ISDN loop, if available, to provide the same functionality as the previously offered UDC product.

2.10.4 2-Wire ADSL-Compatible Loop. This is a designed Loop that is provisioned according to Revised Resistance Design (RRD) criteria and may be up to eighteen thousand (18,000) feet long and may have up to six thousand (6,000) feet of bridged tap (inclusive of Loop length). The Loop is a 2-wire circuit and will come standard with a test point, OC, and a DLR.

2.10.5 2-Wire or 4-Wire HDSL-Compatible Loop. This is a designed Loop that meets Carrier Serving Area (CSA) specifications, may be up to twelve thousand (12,000) feet long and may have up to two thousand five hundred (2,500) feet of bridged tap (inclusive of Loop length). It may be a 2-wire or 4-wire circuit and will come standard with a test point, OC, and a DLR.

2.10.6 4-Wire Unbundled DS1 Digital Loop. This is a designed 4-wire Loop that is provisioned according to industry standards for DS1 or Primary Rate ISDN services and will come standard with a test point, OC, and a DLR. A DS1 Loop may be provisioned over a variety of loop transmission technologies including copper, HDSL-based technology or fiber optic transport systems. It will include a 4-Wire DS1 Network Interface at the customer's location.

2.10.7 4-Wire Unbundled Digital/DS0 Loop. These are designed 4-wire Loops that may be configured as 64kbps, 56kbps, 19kbps, and other sub-rate speeds associated with digital data services and will come standard with a test point, OC, and a DLR.

2.10.8 DS3 Loop. DS3 Loop is a two-point digital transmission path which provides for simultaneous two-way transmission of serial, bipolar, return-to-zero isochronous digital electrical signals at a transmission rate of 44.736 megabits per second (Mbps) that is dedicated to the use of the ordering CLEC in its provisioning of local exchange and associated exchange access services. It may provide transport for twenty-eight (28) DS1 channels, each of which provides the digital equivalent of twenty-four (24) analog voice grade channels. The interface to unbundled dedicated DS3 transport is a metallic-based electrical interface. DS3 Loops come with a test point and a DLR. DS3 Loops require a SI in order to ascertain availability. Rates are mileage sensitive and the mileage is in airline miles, rounded up and a minimum of one (1) mile applies. BellSouth TR 73501 LightGate®Service Interface and Performance Specifications, Issue D, June 1995 applies to DS3 service

2.10.9 STS-1 Loop. STS-1 Loop is a high-capacity digital transmission path with SONET VT1.5 mapping that is dedicated for the use of the ordering customer for the purpose of provisioning local exchange and associated exchange access services. It is a two-point digital transmission path that provides for simultaneous two-way transmission of serial bipolar return-to-zero synchronous digital electrical

signals at a transmission rate of 51.84 Mbps. It may provide transport for twenty-eight (28) DS1 channels, each of which provides the digital equivalent of twenty-four (24) analog voice grade channels. The interface to unbundled dedicated STS-1 transport is a metallic-based electrical interface. STS-1 Loops come with a test point and a DLR. STS-1 Loops require a SI in order to ascertain availability.

2.11 Unbundled Copper Loops (UCL)

2.11.1 BellSouth shall make available UCLs. The UCL is a copper twisted pair Loop that is unencumbered by any intervening equipment (e.g., filters, load coils, range extenders, digital loop carrier, or repeaters) and is not intended to support any particular telecommunications service. The UCL will be offered in two (2) types Designed and Non-Designed.

2.11.2 Unbundled Copper Loop – Designed (UCL-D)

2.11.2.1 The UCL-D will be provisioned as a dry copper twisted pair (2 or 4-wire) Loop that is unencumbered by any intervening equipment (e.g., filters, load coils, range extenders, digital loop carrier, or repeaters).

2.11.2.2 A UCL-D will be eighteen thousand (18,000) feet or less in length and is provisioned according to Resistance Design parameters, may have up to six thousand (6,000) feet of bridged tap and will have up to thirteen hundred (1300) Ohms of resistance.

2.11.2.3 The UCL-D is a designed circuit, is provisioned with a test point, and comes standard with a DLR. OC is a chargeable option for a UCL-D; however, OC is always required on UCLs where a reuse of existing facilities has been requested by KMC III.

2.11.2.4 These Loops are not intended to support any particular services and may be utilized by KMC III to provide a wide-range of telecommunications services as long as those services do not adversely affect BellSouth's network. This facility will include a Network Interface Device (NID) at the customer location for the purpose of connecting the Loop to the customer's inside wire.

2.11.3 Unbundled Copper Loop – Non-Designed (UCL-ND)

2.11.3.1 The UCL–ND is provisioned as a dedicated 2-wire metallic transmission facility from BellSouth's Main Distribution Frame (MDF) to a customer's premises (including the NID). The UCL-ND will be a "dry copper" facility in that it will not have any intervening equipment such as load coils, repeaters, or digital access main lines (DAMLs), and may have up to six thousand (6,000) feet of bridged tap between the end user customer's premises and the serving wire center. The UCL-ND typically will be thirteen hundred (1300) Ohms resistance and in most cases will not exceed 18,000 feet in length, although the UCL-ND will not have a specific length limitation. For Loops less than eighteen thousand (18,000) feet and

with less than thirteen hundred (1300) Ohms resistance, the Loop will provide a voice grade transmission channel suitable for Loop start signaling and the transport of analog voice grade signals. The UCL-ND will not be designed and will not be provisioned with either a DLR or a test point.

2.11.3.2 The UCL-ND facilities may be mechanically assigned using BellSouth's assignment systems. Therefore, the Loop Makeup (LMU) process is not required to order and provision the UCL-ND. However, KMC III can request LMU for which additional charges would apply.

2.11.3.3 For an additional charge, BellSouth also will make available Loop Testing so that KMC III may request further testing on the UCL-ND. Rates for Loop Testing are as set forth in Exhibit A.

2.11.3.4 UCL-ND Loops are not intended to support any particular service and may be utilized by KMC III to provide a wide-range of telecommunications services as long as those services do not adversely affect BellSouth's network. The UCL-ND will include a NID at the customer's location for the purpose of connecting the Loop to the customer's inside wire.

2.11.3.5 OC will be provided as a chargeable option and may be utilized when the UCL-ND provisioning is associated with the reuse of BellSouth facilities. OC-TS does not apply to this product.

2.11.3.6 KMC III may use BellSouth's Unbundled Loop Modification (ULM) offering to remove excessive bridged taps and/or load coils from any copper Loop within the BellSouth network. Therefore, some Loops that would not qualify as UCL-ND could be transformed into Loops that do qualify, using the ULM process.

2.12 <u>Unbundled Loop Modifications (Line Conditioning)</u>

2.12.1 For purposes of this Agreement, Line Conditioning is defined as a RNM that BellSouth regularly undertakes to provide xDSL services to its own customers. This may include the removal of any device, from a copper loop or copper subloop that may diminish the capability of the loop or subloop to deliver high-speed switched wireline telecommunications capability, including xDSL service. Such devices include, but are not limited to; load coals, low pass filters, and range extenders. Insofar as it is technically feasible, BellSouth shall test and report troubles for all the features, functions, and capabilities of conditioned copper lines, any may not restrict its testing to voice transmission only.

2.12.2 BellSouth will remove load coils only on copper loops and sub loops that are less than eighteen thousand (18,000) feet in length. BellSouth will remove load coils on copper loops and sub loops that are greater than eighteen thousand (18,000) feet in length upon KMC III's request at rates pursuant to BellSouth's Special

Construction Process contained in BellSouth's FCC No. 2 Tariff as mutually agreed to by the Parties.

2.12.3 Any copper loop being ordered by KMC III which has over six thousand (6,000) feet of combined bridged tap will be modified, upon request from KMC III, so that the loop will have a maximum of six thousand (6,000) feet of bridged tap. This modification will be performed at no additional charge to KMC III. Line conditioning orders that require the removal of bridged tap that serves no network design purpose on a copper loop that will result in a combined level of bridged tap between two thousand five hundred (2,500) and six thousand (6,000) feet will be performed at the rates set forth in Exhibit A.

2.12.4 KMC III may request removal of any unnecessary and non-excessive bridged tap (bridged tap between zero (0) and two thousand five hundred (2,500) feet which serves no network design purpose), at rates pursuant to BellSouth's Special Construction Process contained in BellSouth's FCC No. 2 Tariff or as otherwise mutually agreed to by the Parties.

2.12.5 Rates for ULM are as set forth in Exhibit A.

2.12.6 BellSouth will not modify a Loop in such a way that it no longer meets the technical parameters of the original Loop type (e.g., voice grade, ADSL, etc.) being ordered. If KMC III wants a different type of Loop or wants the original Loop type modified to a different Loop type then KMC III must submit a new order for that type of Loop.

2.12.7 If KMC III requests ULM on a reserved facility for a new loop order, BellSouth may perform a pair change and provision a different loop facility in lieu of the reserved facility with ULM if feasible. The loop provisioned will meet or exceed specifications of the requested loop facility as modified. KMC III will not be charged for ULM if a different loop is provisioned. For loops that require a DLR or its equivalent, BellSouth will provide LMU detail of the loop provisioned.

2.12.8 KMC III shall request LMU information pursuant to this Attachment prior to submitting a service inquiry and/or a LSR for the Loop type that KMC III desires BellSouth to condition.

2.12.9 When requesting ULM for a Loop that BellSouth has previously provisioned for KMC III, KMC III will submit a service inquiry to BellSouth. If a spare Loop facility that meets the loop modification specifications requested by KMC III is available at the location for which the ULM was requested, KMC III will have the option to change the Loop facility to the qualifying spare facility rather than to provide ULM. In the event that BellSouth changes the Loop facility in lieu of providing ULM, KMC III will not be charged for ULM but will only be charged the service order charges for submitting an order.

2.13 Loop Provisioning Involving Integrated Digital Loop Carriers

2.13.1 Where KMC III has requested an Unbundled Loop and BellSouth uses IDLC systems to provide the local service to the customer and BellSouth has a suitable alternate facility available, BellSouth will make such alternative facilities available to KMC III. If a suitable alternative facility is not available, then to the extent it is technically feasible, BellSouth will implement one of the following alternative arrangements for KMC III (e.g., hairpinning):

1. Roll the circuit(s) from the IDLC to any spare copper that exists to the customer premises.
2. Roll the circuit(s) from the IDLC to an existing DLC that is not integrated.
3. If capacity exists, provide "side-door" porting through the switch.
4. If capacity exists, provide "Digital Access Cross Connect System (DACS)-door" porting (if the IDLC routes through a DACS prior to integration into the switch).

2.13.2 Arrangements 3 and 4 above require the use of a designed circuit. Therefore, non-designed Loops such as the SL1 voice grade and UCL-ND may not be ordered in these cases.

2.13.3 If no alternate facility is available, and upon request from KMC III, and if agreed to by both Parties, BellSouth may utilize its Special Construction (SC) process to determine the additional costs required to provision facilities. KMC III will then have the option of paying the one-time SC rates to place the Loop.

2.14 Network Interface Device

2.14.1 The NID is defined as any means of interconnection of the customer premises wiring to BellSouth's distribution plant, such as a cross connect device used for that purpose. The NID is a single-line termination device or that portion of a multiple line termination device required to terminate a single line or circuit at the premises. Unless otherwise requested, all loops will be provisioned with the appropriate NID. The NID features two (2) independent chambers or divisions that separate the service provider's network from the customer premises wiring. Each chamber or division contains the appropriate connection points or posts to which the service provider and each make their connections. The NID provides a protective ground connection and is capable of terminating cables such as twisted pair cable.

2.14.2 BellSouth shall permit KMC III to connect KMC III's loop facilities to the customer premises wiring through the BellSouth NID or at any other technically feasible point.

2.14.3 Access to NID

2.14.3.1 KMC III may access the customer premises wiring by any of the following means and KMC III shall not disturb the existing form of electrical protection and shall maintain the physical integrity of the NID:

2.14.3.1.1 In Alabama, Georgia, Kentucky, South Carolina and Tennessee, BellSouth shall allow KMC III to connect its Loops directly to BellSouth's multi-line residential NID enclosures that have spare terminations available or KMC III can connect to terminations that currently have loops attached to them but that are not currently used by BellSouth or any other telecommunications carrier to provide service to the premises.

In Florida, Louisiana, Mississippi and North Carolina, if no spare terminations are available; KMC III must connect its Loops to its own NID adjoining BellSouth's multi-line residential NID. KMC III can install the NID and cross connect to BellSouth's NID itself. IF KMC III decides to do so, KMC III can have BellSouth install the NID or have BellSouth install the NID and cross connect to BellSouth's NID. To have BellSouth do this installation work KMC III must submit a LSR. BellSouth will perform the installation and bill KMC III a nonrecurring charge for the NID or for the NID and cross connect.

2.14.3.1.2 Where an adequate length of the customer premises wiring is present and environmental conditions permit, either Party may remove the customer premises wiring from the other Party's NID and connect such wiring to that Party's own NID, provided that it has received the appropriate consent from the customer and has provided reasonable advanced notice to the other Party.

2.14.3.1.3 Either Party may enter the subscriber access chamber or dual chamber NID enclosures for the purpose of extending a connection or spliced jumper wire from the customer premises wiring through a suitable "punch-out" hole of such NID enclosures; or

2.14.3.1.4 KMC III may request BellSouth to make other rearrangements to the customer premises wiring terminations or terminal enclosure on a time and materials cost basis.

2.14.3.2 In no case shall either Party remove or disconnect the other Party's loop facilities from either Party's NIDs, enclosures, or protectors unless the applicable Commission has expressly permitted the same and the disconnecting Party provides prior notice to the other Party. In such cases, it shall be the responsibility of the Party disconnecting loop facilities to leave undisturbed the existing form of electrical protection and to maintain the physical integrity of the NID. It shall be the responsibility of the Party disconnecting loop facilities to ensure there is no safety hazard, and that Party shall hold the other harmless for any liability associated with the removal of the loop facilities from the other Party's NID. Furthermore, it shall be the responsibility of the disconnecting Party, once the other Party's loop has been disconnected from the NID, to reconnect the disconnected loop to a nationally recognized testing laboratory listed station

protector, which has been grounded as per Article 800 of the National Electrical Code. If no spare station protector exists in the NID, the disconnected loop must be appropriately cleared, capped and stored.

2.13.3.3 KMC III shall not remove or disconnect ground wires from BellSouth's NIDs, enclosures, or protectors.

2.13.3.4 KMC III shall not remove or disconnect NID modules, protectors, or terminals from BellSouth's NID enclosures.

2.13.3.5 Due to the wide variety of NID enclosures and outside plant environments, BellSouth will work with KMC III to develop specific procedures to establish the most effective means of implementing this Section if the procedures set forth herein do not apply to the NID in question.

2.13.4 Technical Requirements

2.13.4.1 The NID shall provide an accessible point of interconnection and shall maintain a connection to ground.

2.13.4.2 If an existing NID is accessed, it shall be capable of transferring electrical analog or digital signals between the customer premises and the distribution media and/or cross connect to KMC III's NID.

2.13.4.3 Existing BellSouth NIDs will be provided in working condition**.** Where such NID is not functioning properly, BellSouth shall repair the NID at BellSouth's expense. KMC III may request BellSouth to do additional work to the NID, including relocating the NID and extending associated distribution plant and inside wiring/UNTW, as appropriate, to that new location, on a time and material basis, except where BellSouth does not charge its retail customers to perform the same functions. When KMC III deploys its own local Loops in a multiple-line termination device, KMC III shall specify the quantity of NID connections that it requires within such device.

2.13.4.4 The NID shall be equal to or better than all requirements for NIDs set forth in the applicable industry standard technical requirements.

2.14 Subloop Elements

2.14.1 Where facilities permit, BellSouth shall offer access to its Unbundled Subloop (USL) elements in accordance with 47 C.F.R. §51.319 (b).

2.15 Unbundled Subloop Distribution

2.15.1 The Unbundled Subloop Distribution facility is a dedicated transmission facility that BellSouth provides from a customer's point of demarcation to a BellSouth cross-connect device. The BellSouth cross-connect device may be located within

a remote terminal (RT) or a stand-alone cross-box in the field or in the equipment room of a building. The unbundled subloop distribution media is a copper twisted pair that can be provisioned as a 2-wire or 4-wire facility. BellSouth will make available the following subloop distribution offerings where facilities exist:

Unbundled Subloop Distribution – Voice Grade
Unbundled Copper Subloop
Unbundled Subloop Distribution – Intrabuilding Network Cable (aka riser cable)

2.15.1.1 Unbundled Subloop Distribution – Voice Grade (USLD-VG) is a copper subloop facility from the cross-box in the field up to and including the point of demarcation at the customer premises and may have load coils.

2.15.1.2 Unbundled Copper Subloop (UCSL) is a copper facility of any length provided from the cross-box in the field up to and including the customer's point of demarcation. If available, this facility will not have any intervening equipment such as load coils between the customer premises and the cross-box.

2.15.1.2.1 If KMC III requests a UCSL and it is not available, KMC III may request the copper Subloop facility be modified pursuant to the ULM process to remove load coils and/or excessive bridged taps. If load coils and/or excessive bridged taps are removed, the facility will be classified as a UCSL.

2.15.1.3 Unbundled Subloop Distribution – Intrabuilding Network Cable (USLD-INC) is the distribution facility owned or controlled by BellSouth inside a building or between buildings on the same property that is not separated by a public street or road. USLD-INC includes the facility from the cross-connect device in the building equipment room up to and including the point of demarcation at the customer premises.

2.15.1.3.1 Upon request for USLD-INC from KMC III, BellSouth will install a cross-connect panel in the building equipment room for the purpose of accessing USLD-INC pairs from a building equipment room. The cross-connect panel will function as a single point of interconnection (SPOI) for USLD-INC and will be accessible by multiple carriers as space permits. BellSouth will place cross-connect blocks in 25-pair increments for KMC III's use on this cross-connect panel. KMC III will be responsible for connecting its facilities to the 25-pair cross-connect block(s).

2.15.1.4 For access to Voice Grade USLD and UCSL, KMC III shall install a cable to the BellSouth cross-box pursuant to the terms and conditions for physical collocation for remote sites set forth in this Agreement. This cable would be connected by a BellSouth technician within the BellSouth cross-box during the set-up process. KMC III's cable pairs can then be connected to BellSouth's USL within the BellSouth cross-box by the BellSouth technician.

2.15.1.5 Through the SI process, BellSouth will determine whether access to Unbundled Subloops at the location requested by KMC III is technically feasible and whether sufficient capacity exists in the cross-box. If existing capacity is sufficient to meet KMC III's request, then BellSouth will perform the site set-up as described in the CLEC Information Package, located at the BellSouth Web site: http://www.interconnection.bellsouth.com/products/html/unes.html.

2.15.1.6 The site set-up must be completed before KMC III can order subloop pairs. For the site set-up in a BellSouth cross-connect box in the field, BellSouth will perform the necessary work to splice KMC III's cable into the cross-connect box. For the site set-up inside a building equipment room, BellSouth will perform the necessary work to install the cross-connect panel and the connecting block(s) that will be used to provide access to the requested USLs.

2.15.1.7 Once the site set-up is complete, KMC III will request subloop pairs through submission of a LSR form to the Local Carrier Service Center (LCSC). OC is required with USL pair provisioning when KMC III requests reuse of an existing facility, and the OC charge shall be billed in addition to the USL pair rate. For expedite requests by KMC III for subloop pairs, expedite charges will apply for intervals less than five (5) days.

2.15.1.8 Unbundled Subloops will be provided in accordance with technical reference BellSouth TR73600.

2.15.2 <u>Unbundled Network Terminating Wire (UNTW)</u>

2.15.2.1 UNTW is unshielded twisted copper wiring that is used to extend circuits from an intra-building network cable terminal or from a building entrance terminal to an individual customer premises point of demarcation. It is the final portion of the Loop that in multi-subscriber configurations represents the point at which the network branches out to serve individual subscribers.

2.15.2.2 BellSouth will provide this element in MDUs and/or Multi-Tenants Units (MTUs) where BellSouth owns, controls or leases, but only to the extent that BellSouth has control by virtue of such lease, wiring all the way to the customer premises. BellSouth shall use commercially reasonable efforts to obtain the right to permit KMC III to access the UNTW.

2.15.2.3 <u>Requirements</u>

2.15.2.3.1 On a multi-unit premises, upon request of KMC III, BellSouth will provide access to UNTW pairs on an Access Terminal that is suitable for use by multiple carriers at each Garden Terminal or Wiring Closet.

2.15.2.3.2 Except as otherwise required in this Attachment or as necessary for BellSouth to perform its obligations under Section 2.15.2.3.1, BellSouth shall not be required to

install new or additional UNTW beyond existing UNTW to provision the services of KMC III.

2.15.2.3.3 Upon receipt of the UNTW SI requesting access to BellSouth's UNTW pairs at a multi-unit premises, representatives of both Parties will participate in a meeting at the site of the requested access. The purpose of the site visit will include discussion of the procedures for installation and location of the Access Terminals. By request of KMC III, an Access Terminal will be installed either adjacent to each of BellSouth's Garden Terminal or inside each Wiring Closet. KMC III will deliver and connect its central office facilities to the UNTW pairs within the Access Terminal. KMC III may access any available pair on an Access Terminal. A pair is available when a pair is not being utilized to provide service or where the customer has requested a change in its local service provider to KMC III on that pair. Prior to connecting KMC III's service on a pair previously used by BellSouth, KMC III will use commercially reasonable efforts to ensure the customer is no longer using BellSouth's service or another CLEC's service on that pair before accessing UNTW pairs.

2.15.2.3.4 Access Terminal installation intervals will be established on an individual case basis.

2.15.2.3.5 KMC III is responsible for obtaining the property owner's permission for BellSouth to install an Access Terminal(s) on behalf of KMC III. The submission of the SI by KMC III will serve as certification by KMC III that such permission has been obtained. If the property owner objects to Access Terminal installations that are in progress or within thirty (30) days after completion and demands removal of Access Terminals, KMC III will be responsible for costs associated with removing Access Terminals and restoring the property to its original state prior to Access Terminals being installed.

2.15.2.3.6 KMC III shall indemnify and hold harmless BellSouth against any claims of any kind that may arise out of KMC III's failure to obtain the property owner's permission.

2.15.2.3.7 KMC III will be billed for nonrecurring and recurring charges for accessing UNTW pairs at the time KMC III activates the pair(s). KMC III will notify BellSouth within five (5) business days of activating UNTW pairs using the LSR form.

2.15.2.3.8 If a trouble exists on a UNTW pair, KMC III may use an alternate spare pair that serves that customer premises if a spare pair is available. In such cases, KMC III will re-terminate its existing jumper from the defective pair to the spare pair. Alternatively, **KMC III** will isolate and report troubles to BellSouth. In such cases, KMC III must tag the UNTW pair that requires repair. If BellSouth dispatches a technician on a reported trouble call and no UNTW trouble is found,

BellSouth will charge KMC III for time spent on the dispatch and testing the UNTW pair(s).

2.15.2.3.9 If KMC III initiates the Access Terminal installation and KMC III has not activated at least ten (10) percent of the capacity of the Access Terminal installed pursuant to KMC III's request for an Access Terminal within six (6) months of installation of the Access Terminal, BellSouth will bill KMC III a nonrecurring charge equal to the actual cost of provisioning the Access Terminal. Once KMC III has activated at least ten percent (10%) of the capacity of the Access Terminal within six (6) months of installation of the Access Terminal, KMC III will not be billed for the placement of the Access Terminal even if the percentage of activated pairs drops at a later time below ten percent (10%) or is completely deactivated.

2.15.2.3.10 If BellSouth determines that KMC III is using the UNTW pairs without reporting the activation of the pairs, KMC III will be billed for the use of that pair back to the date the customer began receiving service from KMC III at that location. Upon request, KMC III will provide copies of its redacted billing record or installation order with sufficient information to substantiate such date. If KMC III fails to provide such records, then BellSouth will bill KMC III back to the date of the Access Terminal installation.

2.15.3 Unbundled Subloop Feeder

2.15.3.1 Upon the Effective Date of this Agreement, Unbundled Subloop Feeder (USLF) elements will no longer be offered by BellSouth at TELRIC prices. Within ninety (90) days of the Effective Date of this Agreement, KMC III will either negotiate market-based rates for these elements or will issue orders to have these elements disconnected. If, after this ninety (90) day period, market-based rates have not been negotiated and KMC III has not issued the appropriate disconnect orders, BellSouth may immediately disconnect any remaining USLF elements and will bill KMC III any applicable disconnect charges at rates set forth in Exhibit A.

2.15.4 Unbundled Loop Concentration

2.15.4.1 Upon the Effective Date of this Agreement, the Unbundled Loop Concentration (ULC) element will no longer be offered by BellSouth and no new orders for ULC will be accepted. Any existing ULCs that were provisioned prior to the Effective Date of this Agreement will be grandfathered at the rates set forth in the Parties' interconnection agreement that was in effect immediately prior to this Agreement and may remain connected, maintained and repaired according to BellSouth's TR73600 until such time as they are disconnected by KMC III, or BellSouth provides ninety (90) days notice that such ULC must be terminated at which point the Parties will coordinate the transition in a cooperative manner.

2.16 Dark Fiber Loop

2.16.1 Dark Fiber Loop is defined in Section 2.3.6 above. BellSouth will provide line termination elements at both ends but will not provide regeneration or other electronics necessary for KMC III to utilize Dark Fiber Loops**.**

2.16.2 For maintenance troubles after acceptance of the Dark Fiber, KMC III should use the normal trouble reporting process and BellSouth will isolate and correct the problem.

2.16.3 Transition for Dark Fiber Loop

2.16.3.1 For purposes of this Section 2.16.3, the Transition Period for Dark Fiber Loops is the eighteen (18) month period beginning March 11, 2005 and ending September 10, 2006.

2.16.3.2 For purposes of this Section 2.16.3, Embedded Base means Dark Fiber Loops that were in service for KMC III as of March 10, 2005. Subsequent disconnects or loss of customers shall be removed from the Embedded Base.

2.16.4 During the Transition Period only, BellSouth shall make available for the Embedded Base Dark Fiber Loops for KMC III at the terms and conditions set forth in this Attachment.

2.16.5 Notwithstanding the Effective Date of this Agreement, the rates for KMC III's Embedded Base of Dark Fiber Loops during the Transition Period shall be as set forth in Exhibit A.

2.16.6 The Transition Period shall apply only to KMC III's Embedded Base and KMC III shall not add new Dark Fiber Loops pursuant to this Agreement.

2.16.7 Effective September 11, 2006, Dark Fiber Loops will no longer be made available pursuant to this Agreement.

2.16.8 No later than June 10, 2006 KMC III shall submit spreadsheet(s) identifying all of the Embedded Base of circuits to be either disconnected or converted to other BellSouth services as Conversions pursuant to Section 1.5. The Parties shall negotiate a project schedule for the Conversion of the Embedded Base.

2.16.8.1 If KMC III fails to submit the spreadsheet(s) specified in Section 2.16.8 above for all of its Embedded Base prior to June 10, 2006, BellSouth will identify KMC III's remaining Embedded Base, if any, and will transition such circuits to the equivalent tariffed BellSouth service(s). Those circuits identified and transitioned by BellSouth pursuant to this Section 2.16.8.1 shall be subject to all applicable disconnect charges as set forth in this Agreement and the full nonrecurring charges for installation of the equivalent tariffed BellSouth service as set forth in BellSouth's tariffs.

2.16.8.2 For Embedded Base circuits converted pursuant to Section 2.16.8 or transitioned pursuant to 2.16.8.1, the applicable recurring tariff charge shall apply to each circuit as of the earlier of the date each circuit is converted or transitioned, as applicable, or September 11, 2006.

2.17 Loop Makeup

2.17.1 Description of Service

2.17.1.1 BellSouth shall make available to KMC III LMU information so that KMC III can make an independent judgment about whether the Loop is capable of supporting the advanced services equipment KMC III intends to install and the services KMC III wishes to provide. This Section addresses LMU as a preordering transaction, distinct from KMC III ordering any other service(s). Loop Makeup Service Inquiries (LMUSI) and mechanized LMU queries are likewise unique from other preordering functions with associated SIs as described in this Agreement.

2.17.1.2 BellSouth will provide KMC III LMU information consisting of the composition of the Loop material (copper/fiber); the existence, location and type of equipment on the Loop, including but not limited to digital loop carrier or other remote concentration devices, feeder/distribution interfaces, bridged taps, load coils, pair-gain devices; the Loop length; the wire gauge and electrical parameters.

2.17.1.3 BellSouth's LMU information is provided to KMC III as it exists either in BellSouth's databases or in its hard copy facility records. BellSouth does not guarantee accuracy or reliability of the LMU information provided, but BellSouth shall provide to KMC III the same information that it would provide to itself.

2.17.1.4 BellSouth's provisioning of LMU information to the requesting CLEC for facilities is contingent upon either BellSouth or the requesting CLEC controlling the loop(s) that serve the service location for which LMU information has been requested by the CLEC. The requesting CLEC is not authorized to receive LMU information on a facility used or controlled by another CLEC unless the requesting CLEC has a Letter of Authorization (LOA) from the CLEC using or controlling the loop (owner) or its authorized agent on the LMUSI submitted by the requesting CLEC.

2.17.1.5 KMC III may choose to use equipment that it deems will enable it to provide a certain type and level of service over a particular BellSouth Loop as long as that equipment does not disrupt other services on the BellSouth network. The determination shall be made solely by KMC III and BellSouth shall not be liable in any way for the performance of the advanced data services provisioned over said Loop. The specific Loop type (ADSL, HDSL, or otherwise) ordered on the LSR must match the LMU of the Loop reserved taking into consideration any requisite line conditioning. The LMU data is provided for informational purposes only and does not guarantee KMC III's ability to provide advanced data services over the ordered Loop type. Further, if KMC III orders Loops that do not require a

specific facility medium or Loops that are not intended to support advanced services (such as UVL-SL1, UVL-SL2) and that are not inventoried as advanced services Loops, the LMU information for such Loops is subject to change at any time due to modifications and/or upgrades to BellSouth's network. KMC III is fully responsible for any of its service configurations that may differ from BellSouth's technical standard for the Loop type ordered.

2.17.2 Submitting Loop Makeup Service Inquiries

2.17.2.1 KMC III may obtain LMU information by submitting a mechanized LMU query or a Manual LMUSI. Mechanized LMUs should be submitted through BellSouth's OSS interfaces. After obtaining the Loop information from the mechanized LMU process, if KMC III needs further Loop information in order to determine Loop service capability, KMC III may initiate a separate Manual Service Inquiry for a separate nonrecurring charge as set forth in Exhibit A.

2.17.2.2 Manual LMUSIs shall be submitted according to the guidelines in the LMU CLEC Information Package available at BellSouth's Web site: http://interconnection.bellsouth.com/guides/html/unes.html. The service interval for the return of a Manual LMUSI is three (3) business days. Manual LMUSIs are not subject to expedite requests. This service interval is distinct from the interval applied to the subsequent service order.

2.17.3 Loop Reservations

2.17.3.1 For a Mechanized LMUSI, KMC III may reserve up to ten (10) Loop facilities. For a Manual LMUSI, KMC III may reserve up to three (3) Loop facilities.

2.17.3.2 KMC III may reserve facilities for up to four (4) business days for each facility requested through LMU from the time the LMU information is returned to KMC III. During and prior to KMC III placing an LSR, the reserved facilities are rendered unavailable to other customers, including BellSouth. If KMC III does not submit an LSR for a UNE service on a reserved facility within the four (4) business day reservation timeframe, the reservation of that spare facility will become invalid and the facility will be released.

2.17.3.3 Charges for preordering Manual LMUSI or Mechanized LMU are separate from any charges associated with ordering other services from BellSouth.

2.17.3.4 All LSRs issued for reserved facilities shall reference the facility reservation number as provided by BellSouth. KMC III will not be billed any additional LMU charges for the Loop ordered on such LSR. If, however, KMC III does not reserve facilities upon an initial LMUSI, KMC III's placement of an order for an advanced data service type facility will incur the appropriate billing charges to include SI and reservation per Exhibit A.

2.17.3.5 Where KMC III has reserved multiple Loop facilities on a single reservation, KMC III may not specify which facility shall be provisioned when submitting the LSR. For those occasions, BellSouth will assign to KMC III, subject to availability, a facility that meets the BellSouth technical standards of the BellSouth type Loop as ordered by KMC III.

3 Line Splitting

3.1 Line Splitting shall mean that a provider of data services (a Data LEC) and a provider of voice services (a Voice CLEC) deliver voice and data service to customers over the same loop. BellSouth will provide Line splitting in accordance with 47 C.F.R. § 51.319 (a)(1)(ii).

3.2 In the event KMC III provides its own switching or obtains switching from a third party, KMC III may engage in line splitting arrangements with another LEC using a splitter, provided by KMC III, in a Collocation Arrangement at the central office where the loop terminates into a distribution frame or its equivalent.

3.3 Where KMC III is purchasing a UNE-port and a UNE-loop, BellSouth shall offer line splitting pursuant to the following Sections in this Attachment.

3.4 To the extent KMC III is purchasing UNE-P pursuant to this Agreement, BellSouth will permit KMC III to replace UNE-P with Line Splitting. The UNE-P arrangement will be converted to a stand-alone Loop, a Network Element switch port, two (2) collocation cross-connects and the high frequency spectrum line activation. The resulting arrangement shall continue to be included in KMC III's Embedded Base as described in Section 5.3.3.2.

3.4.1 KMC III shall provide BellSouth with a signed Letter of Authorization (LOA) between it and the Data LEC or Voice LEC with which it desires to provision Line Splitting services, if KMC III will not provide voice and data services.

3.4.2 Customers currently receiving voice service from a Voice LEC through a UNE-P may be converted to Line Splitting arrangements by KMC III or its authorized agent ordering Line Splitting Service. If the CLEC wishes to provide the splitter, the UNE-P arrangement will be converted to a stand-alone UNE Loop, a UNE port, two (2) collocation cross-connects and the high frequency spectrum line activation. If BellSouth owns the splitter, the UNE-P arrangement will be converted to a stand-alone UNE Loop, port, and one (1) collocation cross-connection.

3.4.3 When Customers Loops using High Frequency Spectrum CO Based line sharing service are converted to Line Splitting, BellSouth will discontinue billing KMC III for the High Frequency Spectrum. BellSouth will continue to bill the Data LEC for all associated splitter charges if the Data LEC continues to use a BellSouth splitter. It is the responsibility of KMC III or its authorized agent to determine if

the Loop is compatible for Line Splitting Service. KMC III or its authorized agent may use the existing Loop unless it is not compatible with the Data LEC's data service and KMC III or its authorized agent submits an LSR to BellSouth to change the Loop.

3.5 Provisioning Line Splitting and Splitter Space

3.5.1 The Data LEC, Voice LEC or BellSouth may provide the splitter. When KMC III or its authorized agent owns the splitter, Line Splitting requires the following: a non-designed analog Loop from the serving wire center to the NID at the customer premises; a collocation cross-connection connecting the Loop to the collocation space; a second collocation cross-connection from the collocation space connected to a voice port; the high frequency spectrum line activation, and a splitter. The Loop and port cannot be a Loop and port combination (i.e., UNE-P), but must be individual stand-alone Network Elements. When BellSouth owns the splitter, Line Splitting requires the following: a non designed analog Loop from the serving wire center to the NID at the customer premises with CFA and splitter port assignments, and a collocation cross-connection from the collocation space connected to a voice port.

3.5.2 An unloaded 2-wire copper Loop must serve the customer. The meet point for the Voice LEC and the Data LEC is the point of termination on the MDF for the Data LEC's cable and pairs.

3.5.3 The foregoing procedures are applicable to migration to Line Splitting Service from a UNE-P arrangement, BellSouth Retail Voice Service, BellSouth High Frequency Spectrum (CO Based) Line Sharing.

3.5.4 For other migration scenarios to line splitting, BellSouth will work cooperatively with CLECs to develop methods and procedures to develop a process whereby a Voice CLEC and a Data LEC may provide services over the same Loop.

3.6 Ordering – Line Splitting

3.6.1 KMC III shall use BellSouth's LSOD to order splitters from BellSouth and to activate and deactivate DS0 Collocation CFA for use with Line Splitting.

3.6.2 BellSouth shall provide KMC III the LSR format to be used when ordering Line Splitting service.

3.6.3 BellSouth will provision Line Splitting service in compliance with BellSouth's Products and Services Interval Guide available at BellSouth's Web site: http://www.interconnection.bellsouth.com.

3.6.4 BellSouth will provide KMC III access to Preordering LMU in accordance with the terms of this Agreement. BellSouth shall bill and KMC III shall pay the rates for such services as described in Exhibit A.

3.6.5 BellSouth will provide Loop Modification to KMC III on an existing Loop in accordance with procedures developed in the Line Sharing Collaborative. High Frequency Spectrum (CO Based) Unbundled Loop Modification is a separate distinct service from ULM set forth in Section 2.12 above. Procedures for High Frequency Spectrum (CO Based) Unbundled Loop Modification may be found on BellSouth's Web site: http://www.interconnection.bellsouth.com/guides/unedocs/hi_freq_sp_ulm.pdf. Nonrecurring rates for this offering are as set forth in Exhibit A.

3.7 Maintenance – Line Splitting

3.7.1 BellSouth will be responsible for repairing voice services and the physical loop between the NID at the customer premises and the termination point. KMC III will be responsible for maintaining the voice and data services. Each Party will be responsible for maintaining its own equipment.

3.7.2 KMC III shall inform its customers to direct all problems to KMC III or its authorized agent.

3.7.3 KMC III shall indemnify, defend and hold harmless BellSouth from and against any claims, losses, actions, causes of action, suits, demands, damages, injury, and costs including reasonable attorney fees proximately arising out of or resulting from actions taken by the data provider or KMC III in connection with the line splitting arrangement, except to the extent caused by BellSouth's negligence, gross negligence or willful misconduct.

4 Local Switching

4.1 Notwithstanding anything to the contrary in this Agreement, the services offered pursuant to this Section 4 are limited to DS0 level Local Switching and BellSouth is not required to provide Local Switching pursuant to this Agreement except as set forth in Section 4.2.

4.1.1 BellSouth shall not be required to unbundle local circuit switching for KMC III for a particular End User when KMC III: (1) serves an End User with four (4) or more voice-grade (DS0) equivalents or lines served by BellSouth in Zone 1 of the following MSAs: Atlanta, GA; Miami, FL; Orlando, FL; Ft. Lauderdale, FL; Charlotte-Gastonia-Rock Hill, NC; Greensboro-Winston Salem-High Point, NC; Nashville, TN; and New Orleans, LA; or (2) serves an End User with a DS1 or higher capacity Loop in any service area covered by this Agreement. To the extent that KMC III is serving any End User as described above as of the Effective Date of this Agreement, such End User's arrangement may not remain in place and such Arrangement must be terminated by KMC III or transitioned by KMC III, or BellSouth shall disconnect such Arrangements upon thirty (30) days notice.

4.2 Transition for Local Switching

4.2.1 Notwithstanding the Effective Date of this Agreement, for purposes of this Section 4, the Transition Period for Local Switching is the twelve (12) month period beginning March 11, 2005 and ending March 10, 2006.

4.2.2 For the purposes of this Section 4, Embedded Base shall mean Local Switching and any additional elements that are required to be provided in conjunction therewith that were in service for KMC III as of March 10, 2005. Subsequent disconnects or loss of customers shall be removed from the Embedded Base.

4.2.3 During the Transition Period only, BellSouth shall make Local Switching available for the Embedded Base, in addition to all elements that are required to be provided in conjunction with Local Switching, at the rates, terms and conditions set forth in this Attachment. The Transition Period shall apply only to KMC III's Embedded Base and KMC III shall not place new orders for Local Switching pursuant to this Agreement.

4.2.4 Notwithstanding the Effective Date of this Agreement, the rates for KMC III's Embedded Base of Local Switching during the Transition Period shall be as set forth in Exhibit A.

4.2.5 KMC III must submit orders, to disconnect or convert all of its Embedded Base of Local Switching to other BellSouth services as Conversions pursuant to Section 1.5 by October 1, 2005.

4.2.5.1 If KMC III fails to submit orders to disconnect or convert all of its Embedded Base of Local Switching as specified in Section 4.2.5 above prior to October 1, 2005, BellSouth will identify KMC III's remaining Embedded Base of Local Switching and will disconnect such Local Switching. Those circuits identified and disconnected by BellSouth shall be subject to the applicable disconnect charges as set forth in this Agreement.

4.2.6 Effective March 11, 2006, Local Switching will no longer be made available pursuant to this Agreement.

4.3 <u>Local Switching Capability, including Tandem Switching Capability</u>

4.3.1 Local Switching capability is defined as all line-side and trunk-side facilities, plus the features, functions, and capabilities of the switch. The features, functions, and capabilities of the switch shall include the basic switching function of connecting lines to lines, lines to trunks, trunks to lines, and trunks to trunks. Local Switching includes all vertical features that the switch is capable of providing, including custom calling, custom local area signaling service features, and Centrex, as well as any technically feasible customized routing functions.

4.3.2 Unbundled Local Switching consists of three (3) separate unbundled elements: Unbundled Ports, End Office Switching Functionality, and End Office Interoffice Trunk Ports.

4.3.3 Unbundled Local Switching combined with Common Transport and, if necessary, Tandem Switching provides to KMC III's customer's local calling and the ability to presubscribe to a primary carrier for intraLATA toll service and to presubscribe to a primary carrier for interLATA toll service.

4.3.4 Provided that KMC III purchases unbundled local switching from BellSouth and uses the BellSouth Carrier Identification Code (CIC) for its customers' Local Preferred Interexchange Carrier (LPIC) or if a BellSouth Local customer selects BellSouth as its LPIC, then the Parties will consider as local any calls originated by a KMC III local customer, or originated by a BellSouth local customer and terminated to a KMC III local customer, where such calls originate and terminate in the same LATA, except for those calls originated and terminated through switched access arrangements (i.e., calls that are transported by a Party other than BellSouth). Except as set forth in the BellSouth UNE call flows applicable to UNE-P, for such calls, BellSouth will charge KMC III the UNE elements for the BellSouth facilities utilized. Neither Party shall bill the other originating or terminating switched access charges for such calls. Intercarrier compensation for local calls between BellSouth and KMC III shall be as described in BellSouth's UNE Local call flows applicable to UNE-P as found in BellSouth's 2-wire Voice Grade UNE Loop/Port Switched Combination or The Unbundled Network Element Platform (UNE-P) For (Business, Residential and Line Side PBX Service) Including On/Off Premise Extensions guide located on BellSouth's Web site at: thttp://interconnection.bellsouth.com/guides/unedocs/2wireVGrdULPSComb.pdf.

4.3.5 Where KMC III purchases unbundled local switching from BellSouth but does not use the BellSouth CIC for its customers' LPIC, BellSouth will consider as local those direct dialed telephone calls that originate from a KMC III customer and terminate within the basic local calling area or within the extended local calling areas and that are dialed using seven (7) or ten (10) digits as defined and specified in Section A3 of BellSouth's GSST. Except as set forth in the BellSouth UNE call flows applicable to UNE-P, for such local calls, BellSouth will charge KMC III the UNE elements for the BellSouth facilities utilized. Intercarrier compensation for Local calls between BellSouth and KMC III shall be as described in BellSouth's UNE Local call flows applicable to UNE-P as found in BellSouth's 2-Wire Voice Grade UNE Loop/Port Switched Combination Or The Unbundled Network Element Platform (UNE-P) For (Business, Residential and Line Side PBX Service) Including On/Off Premise Extensions guide located on BellSouth's Web site at http://interconnection.bellsouth.com/guides/unedocs/2wireVGrdULPSComb.pdf.

4.3.6 For any calls utilizing Unbundled Local Switching, that originate and terminate through switched access arrangements (i.e., calls that are transported by a party other than BellSouth), BellSouth shall bill KMC III the UNE elements for the BellSouth facilities utilized. Each Party may bill the toll provider originating or terminating switched access charges as appropriate.

4.3.7 Unbundled ports may or may not include individual features. Where applicable and available, non-switch-based services may be ordered with the Unbundled Port at BellSouth's retail rates.

4.3.8 Any features of Local Switching that are not currently available but are technically feasible through the switch can be requested through the BFR/NBR process as set forth in Attachment 11 of this Agreement.

4.3.9 BellSouth will provide to KMC III selective routing of calls to a requested Operator System platform pursuant to this Attachment. Any other routing requests by KMC III will be made pursuant to the BFR Process as set forth in Attachment 11 of this Agreement**.**

4.4 Remote Call Forwarding (URCF)

4.4.1 As an option, BellSouth shall make available to KMC III an unbundled port with Remote Call Forwarding capability (URCF service). URCF service combines the functionality of unbundled local switching, tandem switching and common transport to forward calls from the URCF service telephone number (the number dialed by the calling party) to another telephone number selected by the URCF service subscriber. When ordering URCF service, KMC III will ensure that the following conditions are satisfied:

4.4.1.1 That the customer of the forward-to number (service) agrees to receive calls forwarded using the URCF service (if such customer is different from the URCF service customer);

4.4.1.2 That the forward-to number (service) is equipped with sufficient capacity to receive the volume of calls that will be generated from the URCF service;

4.4.1.3 That the URCF service will not be utilized to forward calls to another URCF or similar service; and

4.4.1.4 That the forward-to number (service) is not a public safety number (e.g., 911, fire or police number).

4.4.2 In addition to the charge for the URCF service port, BellSouth shall charge KMC III the rates set forth in Exhibit A for unbundled local switching, tandem switching, and common transport, including all associated usage incurred for calls from the URCF service telephone number (the number dialed by the calling party) to the forward-to number (service).

4.4.3 BellSouth shall perform routine testing (e.g., Mechanized Loop Tests (MLT) and test calls such as 105, 107 and 108 type calls) and fault isolation on a mutually agreed upon schedule.

4.4.4 BellSouth shall control congestion points such as those caused by radio station call-ins and network routing abnormalities. When necessary, all traffic shall be restricted in a non-discriminatory manner.

4.4.5 BellSouth shall perform manual call trace and permit customer originated call trace. BellSouth shall provide Switching Service Point (SSP) capabilities and signaling software to interconnect the signaling links destined to the Signaling Transfer Point Switch (STPS). These capabilities shall adhere to the technical specifications set forth in the applicable industry standard technical references.

4.4.6 BellSouth shall provide interfaces to adjuncts through Telcordia standard interfaces. These adjuncts can include, but are not limited to, the Service Circuit Node and Automatic Call Distributors. BellSouth shall offer to KMC III all Advanced Intelligent Network (AIN) triggers in connection with its SMS/SCE offering.

4.4.7 BellSouth shall provide access to SS7 Signaling Network or Multi-Frequency trunking if requested by KMC III.

4.4.8 Local Switching Interfaces.

4.4.8.1 BellSouth shall provide the following local switching interfaces:

4.4.8.2 Standard Tip/Ring interface including loop-start or ground-start, on-hook signaling (e.g., for calling number, calling name and message waiting lamp);

4.4.8.3 Coin phone signaling;

4.4.8.4 Basic Rate Interface ISDN adhering to appropriate Telcordia Technical Requirements;

4.4.8.5 2-wire analog interface to PBX;

4.4.8.6 4-wire analog interface to PBX;

4.4.8.7 Loops adhering to Telcordia TR-NWT-08 and TR-NWT-303 specifications to interconnect Digital Loop Carriers.

4.4.9 KMC III shall maintain the individual telephone number and the correct corresponding address/location data, including maintaining the customer listed address as the actual physical customer location in the E911 Automatic Location Identification (ALI) Database.

4.4.10 KMC III will be responsible and liable for any errors resulting from the submission of invalid telephone number and address/location data for the CLEC's customer.

4.5 Tandem Switching

4.5.1 The Tandem Switching capability Network Element is defined as: (i) trunk-connect facilities, which include, but are not limited to, the connection between trunk termination at a cross connect panel and switch trunk card; (ii) the basic switch trunk function of connecting trunks to trunks; and (iii) the functions that are centralized in the Tandem Switches (as distinguished from separate end office switches), including but not limited to call recording, the routing of calls to operator services and signaling conversion features.

4.5.2 Where KMC III utilizes portions of the BellSouth network in originating or terminating traffic, the Tandem Switching rates are applied in call scenarios where the Tandem Switching Network Element has been utilized. Because switch recordings cannot accurately indicate on a per call basis when the Tandem Switching Network Element has been utilized for an interoffice call originating from a UNE port and terminating to a BellSouth, Independent Company or Facility-Based CLEC office, BellSouth has developed, based upon call studies, a melded rate that takes into account the average percentage of calls that utilize Tandem Switching in these scenarios. BellSouth shall apply the melded Tandem Switching rate for every call in these scenarios. BellSouth shall utilize the melded Tandem Switching Rate until BellSouth has the capability to measure actual Tandem Switch usage in each call scenario specifically mentioned above, at which point the rate for the actual Tandem Switch usage shall apply. The UNE call flows applicable to UNE-P set forth on BellSouth's Web site at http://interconnection.bellsouth.com/guides/unedocs/2wireVGrdULPSComb.pdf. illustrate when the full or melded Tandem Switching rates apply for specific scenarios.

4.5.3 Technical Requirements

4.5.3.1 Tandem Switching shall have the same capabilities or equivalent capabilities as those described in Telcordia TR-TSY-000540 Issue 2R2, Tandem Supplement, June 1, 1990. The requirements for Tandem Switching include but are not limited to the following:

4.5.3.1.1 Tandem Switching shall provide signaling to establish a tandem connection with no loss of feature functionality;

4.5.3.1.2 Based on the line class codes established by KMC IIIKMC IIIcustomer_short_name at the BellSouth end office, Tandem Switching will provide screening and routing as designated by KMC III;

4.5.3.1.3 Where applicable, Tandem Switching shall provide AIN triggers supporting AIN features where such routing is not available from the originating end office switch, to the extent such Tandem switch has such capability;

4.5.3.1.4 Where applicable, Tandem Switching shall provide access to Toll Free number database;

4.5.3.1.5 Tandem Switching shall provide connectivity to Public Safety Answering Point (PSAP)s where 911/E911 solutions are deployed and the tandem is used for 911/E911; and

4.5.3.1.6 Where appropriate, Tandem Switching shall provide connectivity for the purpose of routing transit traffic to and from other carriers. Tandem switching shall interconnect, with direct trunks, to all carriers with which BellSouth interconnects.

4.5.3.2 Upon reasonable request from KMC III BellSouth will perform testing and fault isolation on the underlying switch that is providing Tandem Switching. Such testing shall be testing routinely performed by BellSouth. The results and reports of the testing shall be made available to KMC III as soon as reasonably practicable.

4.5.3.3 BellSouth shall control congestion points and network abnormalities. All traffic will be restricted in a non-discriminatory manner.

4.5.3.4 Tandem Switching shall process originating toll free traffic received from KMC III's local switch.

4.5.3.5 In support of AIN triggers and features, Tandem Switching shall provide Service SSP capabilities when these capabilities are not available from the Local Switching Network Element to the extent such Tandem Switch has such capability.

4.5.3.6 BellSouth's Tandem Switching shall preserve CLASS/LASS features and Caller ID, when that information is provided to BellSouth, as traffic is processed.

4.6 <u>AIN Selective Carrier Routing for Operator Services, Directory Assistance and Repair Centers</u>

4.6.1 Where BellSouth provides local switching to KMC III, BellSouth will provide AIN Selective Carrier Routing (AIN SCR) at the request of KMC III. AIN SCR will provide KMC III with the capability of routing operator calls, 0+ and 0- and 0+ NPA Local Numbering Plan Area (LNPA), 555-1212 directory assistance, 1+411 directory assistance and 611 repair center calls to pre-selected destinations.

4.6.2 KMC III shall order AIN SCR through its Account Team and/or Local Contract Manager. AIN SCR must first be established regionally and then on a per central office basis for each office where AIN SCR will be utilized.

4.6.3 AIN SCR is not available in DMS 10 switches.

4.6.4 Where AIN SCR is utilized by KMC III, the routing of KMC III's customer calls shall be pursuant to information provided by KMC III and stored in BellSouth's AIN SCR Service Control Point database. AIN SCR shall utilize a set of Line Class Codes (LCCs) unique to a basic class of service assigned on an "as needed" basis. The same LCCs will be assigned in each central office where AIN SCR is established.

4.6.5 KMC III shall remit to BellSouth the Regional Service Order nonrecurring charges set forth in Exhibit A. There shall be a nonrecurring End Office Establishment Charge per office due at the addition of each central office where AIN SCR will be utilized. Said nonrecurring charge shall be as set forth in Exhibit A. For each KMC III customer activated, there shall be a nonrecurring End User Establishment charge as set forth in Exhibit A. KMC III shall pay the AIN SCR Per Query Charge set forth in Exhibit A.

4.6.6 This Regional Service Order nonrecurring charge will be non-refundable and will be paid with one-half (½) due up-front with the submission of all fully completed required forms including: Regional Selective Carrier Routing (SCR) Order Request-Form A, Central Office AIN SCRSCR Order Request - Form B, AIN SCR Central Office Identification Form - Form C, AIN SCR Routing Options Selection Form - Form D, and Routing Combinations Table - Form E. BellSouth has thirty (30) days to respond to KMC III's fully completed firm order as a Regional Service Order. With the delivery of this firm order response to KMC III, BellSouth considers that the delivery schedule of this service commences. The remaining half of the Regional Service Order payment must be paid when one hundred percent (100%) of the Central Offices listed on the original order have been turned up for the service.

4.6.7 The nonrecurring End Office Establishment Charge will be billed to KMC III following BellSouth's normal monthly billing cycle for this type of order.

4.6.8 End User Establishment Orders will not be turned-up until the second payment is received for the Regional Service Order. The nonrecurring End User Establishment Charges will be billed to KMC III following BellSouth's normal monthly billing cycle for this type of order.

4.6.9 Additionally, the AIN SCR Per Query Charge will be billed to KMC III following the normal billing cycle for per query charges.

4.6.10 All other network components needed, for example, unbundled switching, unbundled local transport, etc., will be billed per contracted rates.

4.7 <u>Selective Call Routing Using Line Class Codes (SCR-LCC)</u>

4.7.1 Where KMC III purchases unbundled local switching from BellSouth and utilizes an operator services provider other than BellSouth, BellSouth will route KMC III's customer calls to that provider through Selective Call Routing.

4.7.2 Selective Call Routing using Line Class Codes (SCR-LCC) provides the capability for KMC III to have its Operator Call Processing/Directory Assistance (OCP/DA) calls routed to BellSouth's OCP/DA platform for BellSouth provided Custom Branded or Unbranded OCP/DA or to its own or an alternate OCP/DA platform

for Self-Branded OCP/DA. SCR-LCC is only available if line class code capacity is available in the requested BellSouth end office switches.

4.7.3 Custom Branding for Directory Assistance (DA) is not available for certain classes of service, including but not limited to Hotel/Motel services, WATS service, and certain PBX services.

4.7.4 Where available, KMC III specific and unique LCCs are programmed in each BellSouth end office switch where KMC III intends to serve customer with customized OCP/DA branding. The LCCs specifically identify KMC III's customers so OCP/DA calls can be routed over the appropriate trunk group to the requested OCP/DA platform. Additional LCCs are required in each end office if the end office serves multiple NPAs (i.e., a unique LCC is required per NPA), and/or if the end office switch serves multiple rate areas and KMC III intends to provide KMC III -branded OCP/DA to its customers in these multiple rate areas.

4.7.5 SCR-LCC supporting Custom Branding and Self Branding require KMC III to order dedicated trunking from each BellSouth end office identified by KMC III, either to the BellSouth Traffic Operator Position System (TOPS) for Custom Branding or to the KMC III Operator Service Provider for Self Branding. Separate trunk groups are required for Operator Services and for DA. Rates for trunks shall be in accordance with Section 4.8.1.1 of Attachment 3.

4.7.6 Unbranding - Unbranded DA and/or OCP calls ride common trunk groups provisioned by BellSouth from those end offices identified by KMC III to the BellSouth TOPS.

4.7.7 The rates for SCR-LCC are as set forth in Exhibit A. There is a nonrecurring charge for the establishment of each LCC in each BellSouth central office. Furthermore, for Unbranded and Custom Branded OCP/DA provided by BellSouth Operator Services with unbundled ports and unbundled port/loop switch combinations, monthly recurring usage charges shall apply for the UNEs necessary to provide the service, such as end office and tandem switching and common transport. A flat rated end office switching charge shall apply to Self-Branded OCP/DA when used in conjunction with unbundled ports and unbundled port/loop switch combinations.

5 Unbundled Network Element Combinations

5.1 BellSouth shall provide unbundled network element combinations in accordance with 47 C.F.R. § 51.315.

5.1.1 For purposes of this Section, references to "Currently Combined" Network Elements shall mean that the particular Network Elements requested by KMC III are in fact already combined by BellSouth in the BellSouth network. References to "Ordinarily Combined" Network Elements shall mean that the particular Network

Elements requested by KMC III are not already combined by BellSouth in the location requested by KMC III but are elements that are typically combined in BellSouth's network. References to "Not Typically Combined" Network Elements shall mean that the particular Network Elements requested by KMC III are not elements that BellSouth combines for its use in its network.

5.1.2 Upon request, BellSouth shall perform the functions necessary to combine UNEs in any manner, even if those elements are not ordinarily combined in BellSouth's network, provided that such Combination is technically feasible and will not undermine the ability of other carriers to obtain access to UNEs or to interconnect with BellSouth's network.

5.2 Enhanced Extended Links (EELs)

5.2.1 EELs are combinations of unbundled Loops and Dedicated Transport, together with any facilities, equipment, or functions necessary to combine those Network Elements. BellSouth shall provide KMC III with EELs where the underlying UNE or UNEs are available and in all instances where the requesting carrier meets the FCC's eligibility requirements, if applicable.

5.2.2 EELs include, but are not limited to the following combinations:

5.2.2.1 DS1 Interoffice Channel + DS1 Channelization + 2-wire VG Local Loop

5.2.2.2 DS1 Interoffice Channel + DS1 Channelization + 4-wire VG Local Loop

5.2.2.3 DS1 Interoffice Channel + DS1 Channelization + 2-wire ISDN Local Loop

5.2.2.4 DS1 Interoffice Channel + DS1 Channelization + 4-wire 56 kbps Local Loop

5.2.2.5 DS1 Interoffice Channel + DS1 Channelization + 4-wire 64 kbps Local Loop

5.2.2.6 DS1 Interoffice Channel + DS1 Local Loop

5.2.2.7 DS3 Interoffice Channel + DS3 Local Loop

5.2.2.8 STS-1 Interoffice Channel + STS-1 Local Loop

5.2.2.9 DS3 Interoffice Channel + DS3 Channelization + DS1 Local Loop

5.2.2.10 STS-1 Interoffice Channel + DS3 Channelization + DS1 Local Loop

5.2.2.11 2-wire VG Interoffice Channel + 2-wire VG Local Loop

5.2.2.12 4wire VG Interoffice Channel + 4-wire VG Local Loop

5.2.2.13 4-wire 56 kbps Interoffice Channel + 4-wire 56 kbps Local Loop

5.2.2.14 4-wire 64 kbps Interoffice Channel + 4-wire 64 kbps Local Loop

5.2.2.15 Commingled loop and transport facilities at the DS1 and/or DS3 level

5.2.3 High-capacity EELs are combinations of 1) UNE loops, as defined in this Agreement, with UNE transport, as defined in this Agreement; 2) UNE loops, as defined in this Agreement, with wholesale transport; or 3) UNE transport, as defined in this Agreement, with wholesale loops at the DS1 and/or DS3 level as described in 47 C.F.R. § 51.318(b). High-capacity EELs must comply with the service eligibility requirements set forth in Section 5.2.5 below.

5.2.4 By placing an order for a high-capacity EEL, KMC III thereby certifies that the high-capacity EEL service eligibility criteria set forth herein are met for access to a converted high-capacity EEL, a new high-capacity EEL, or part of a high-capacity commingled EEL as a UNE. BellSouth may not deny, except as set forth in Section 5.2.6 below, KMC III's request for a high-capacity EEL based upon eligibility criteria, but shall have the right to clarify the order back to KMC III rather than processing the order should the BellSouth representative identify that KMC III does not have a collocation arrangement that meets the requirements of 47 C.F.R. § 51.318(c).

5.2.5 <u>Service Eligibility Criteria</u>

5.2.5.1 By placing an order for a high-capacity EEL, KMC III certifies that all of the following service eligibility criteria are met for each high-capacity EEL. These service eligibility criteria apply to all wholesale, as well as retail, service offerings by KMC III over high-capacity EELs.

5.2.5.1.1 KMC III has received state certification to provide local voice service in the area being served or, in the absence of a state certification requirement, has complied with registration, tariffing, filing fee, or other regulatory requirements applicable to the provision of local voice service in that area;

5.2.5.2 For each combined circuit, including each DS1 circuit, each DS1 EEL, and each DS1-equivalent circuit on a DS3 EEL:

5.2.5.2.1 Each circuit to be provided to each customer will be assigned a local number prior to the provision of service over that circuit;

5.2.5.2.2 Each DS1-equivalent circuit on a DS3 EEL must have its own local number assignment, so that each DS3 must have at least twenty-eight (28) local voice numbers assigned to it;

5.2.5.2.3 Each circuit to be provided to each customer will have 911 or E911 capability prior to provision of service over that circuit;

5.2.5.2.4 Each circuit to be provided to each customer will terminate in a collocation arrangement that meets the requirements of 47 C.F.R. § 51.318(c);

5.2.5.2.5 Each circuit to be provided to each customer will be served by an interconnection trunk in the same LATA as the customer premises served by the EEL over which KMC III will transmit the calling party's number in connection with calls exchanged over the trunk;

5.2.5.2.6 For each twenty-four (24) DS1 EELs or other facilities having equivalent capacity, KMC III will have at least one (1) active DS1 local service interconnection trunk within the LATA over which KMC III will transmit the calling party's number in connection with calls exchanged over the trunk;

5.2.5.2.7 Each circuit to be provided to each customer will be served by a switch capable of switching local voice traffic.

5.2.6 BellSouth may, on an annual basis, and only based upon cause, conduct an audit of KMC III's records in order to verify compliance with the high capacity EEL eligibility criteria.

5.2.6.1 To invoke its limited right to audit, BellSouth will send a Notice of Audit to KMC III identifying the cause upon which BellSouth rests its allegations. Such Notice of Audit will be delivered to KMC III no less than thirty (30) days prior to the date upon which BellSouth seeks to commence an audit**.**

5.2.6.2 The audit shall be conducted by a third party independent auditor retained and paid for by BellSouth. The audit shall commence at a mutually agreeable location (or locations).

5.2.6.2.1 The audit must be performed in accordance with the standards established by the American Institute for Certified Public Accountants (AICPA) which will require the auditor to perform an "examination engagement" and issue an opinion regarding KMC III's compliance with the high capacity EEL eligibility criteria. AICPA standards and other AICPA requirements related to determining the independence of an auditor shall govern the audit of requesting carrier compliance. The concept of materiality governs this audit; the independent auditor's report will conclude whether or the extent to which KMC III complied in all material respects with the applicable service eligibility criteria. Consistent with standard auditing practices, such audits require compliance testing designed by the independent auditor, which typically include an examination of a sample selected in accordance with the independent auditor's judgment.

5.2.6.2.2 To the extent the independent auditor's report concludes that KMC III failed to comply with the high capacity EEL service eligibility criteria, KMC III must true-up any difference in payments, convert all noncompliant circuits to the appropriate service, and make the correct payments on a going-forward basis.

5.2.6.2.3 To the extent the independent auditor's report concludes that KMC III failed to comply in all material respects with the service eligibility criteria, KMC III shall reimburse BellSouth for the cost of the independent auditor. Similarly, to the extent the independent auditor's report concludes that KMC III did comply in all material respects with the service eligibility criteria, BellSouth will reimburse KMC III for its reasonable and demonstrable costs associated with the audit, including, among other things, staff time. The Parties shall provide such reimbursement within thirty (30) days of receipt of a statement of such costs.

5.2.6.2.4 KMC III will maintain appropriate documentation to support its certifications.

5.3 UNE-P

5.3.1 DS0 Local Switching, as defined in Section 4, in combination with a Loop and Common (Shared) Transport as defined in Section 4.3 (UNE-P) provides local exchange service for the origination or termination of calls. UNE-P supports the same local calling and feature requirements as described in the Local Switching section of this Attachment and the ability to presubscribe to a primary carrier for intraLATA toll service and/or to presubscribe to a primary carrier for interLATA toll service.

5.3.2 Notwithstanding anything to the contrary in this Agreement, BellSouth is not required to provide UNE-P pursuant to this Agreement except as set forth in this Section 5.3.

5.3.3 Transition Period for UNE-P

5.3.3.1 For purposes of this Section 5.3, the Transition Period for UNE-P is the twelve (12) month period beginning March 11, 2005 and ending March 10, 2006.

5.3.3.2 For the purposes of this Section 5.3, Embedded Base shall mean UNE-P and any additional elements that are required to be provided in conjunction therewith that were in service for KMC III as of March 10, 2005. Subsequent disconnects or loss of customers shall be removed from the Embedded Base.

5.3.3.3 During the Transition Period only, BellSouth shall make UNE-P available for the Embedded Base, in addition to all elements that are required to be provided in conjunction with UNE-P, at the rates, terms and conditions set forth in this Attachment. The Transition Period shall apply only to KMC III's Embedded Base and KMC III shall not place new orders for UNE-P pursuant to this Agreement.

5.3.3.4 Notwithstanding the Effective Date of this Agreement, the rates for KMC III's Embedded Base of UNE-P during the Transition Period shall be as set forth in Exhibit A.

5.3.3.5 KMC III must submit orders, or spreadsheets if converting to UNE Loops through the Bulk Migration process, outlined in Section 2.7, to either disconnect or

convert all of its Embedded Base of UNE-P to other BellSouth services as Conversions pursuant to Section 1.5 by October 1, 2005.

5.3.3.5.1 If KMC III fails to submit orders or spreadsheets converting all of the Embedded Base of UNE-P as specified in Section 5.3.3.5 above prior to October 1, 2005, BellSouth will identify KMC III's remaining Embedded Base of UNE-P and will transition such UNE-P to resold BellSouth telecommunication services, as set forth in Attachment 1. Those circuits identified and transitioned by BellSouth shall be subject to the applicable disconnect charges as set forth in this Agreement and the full nonrecurring charges for installation of such BellSouth services as set forth in BellSouth's tariffs.

5.3.3.6 For Embedded Base UNE-P converted pursuant to Section 5.3.3.5 or transitioned pursuant to Section 5.3.3.5.1, the applicable recurring tariff charges shall apply as of the earlier of the date each circuit is converted or transitioned, as applicable, or March 11, 2006.

5.3.3.7 Effective March 11, 2006, UNE-P will no longer be made available pursuant to this Agreement.

5.3.4 BellSouth shall make 911 updates in the BellSouth 911 database for KMC III’s UNE-P. BellSouth will not bill KMC III for 911 surcharges. KMC III is responsible for paying all 911 surcharges to the applicable governmental agency.

5.4 <u>Rates</u>

5.4.1 The rates for the Currently Combined Network Elements specifically set forth in Exhibits A and B shall be the rates associated with such Combinations. Where a Currently Combined Combination is not specifically set forth in Exhibit A or B, the rate for such Currently Combined Combination of Network Elements shall be the sum of the recurring rates for those individual Network Elements in addition to the applicable non-recurring switch-as-is charge set forth in Exhibits A and B.

5.4.2 The rates for the Ordinarily Combined Network Elements specifically set forth in Exhibits A and B shall be the nonrecurring and recurring charges for those Combinations. Where an Ordinarily Combined Combination is not specifically set forth in Exhibit A or B, the rate for such Ordinarily Combined Combination of Network Elements shall be the sum of the recurring and nonrecurring rates for those individual Network Elements as set forth in Exhibits A and B.

5.4.3 BellSouth shall provide other Currently Combined, Ordinarily Combined and Not Typically Combined UNE Combinations to KMC III in addition to those specifically referenced in this Section 5 above, where available.

5.4.3.1 To the extent KMC III requests a Combination for which BellSouth does not have rates and methods and procedures in place to provide such Combination, rates

and/or methods and procedures for such Combination will be developed pursuant to the BFR process.

6 Dedicated Transport and Dark Fiber Transport

6.1 Dedicated Transport. BellSouth shall offer unbundled access to Dedicated Transport in accordance with 47 C.F.R. §§ 51.311 and 51.319 and Section 251(c) (3) of the Act. Dedicated Transport is defined as BellSouth's transmission facilities between wire centers or switches owned by BellSouth, or between wire centers or switches owned by BellSouth and switches owned by KMC III, including but not limited to DS1, DS3 and OCn level services, as well as dark fiber, dedicated to KMC III. BellSouth shall not be required to provide access to OCn level Dedicated Transport under any circumstances pursuant to this Agreement. In addition, except as set forth in Section 6.2 below, BellSouth shall not be required to provide to KMC III unbundled access to interoffice transmission facilities that do not connect a pair of wire centers or switches owned by BellSouth (Entrance Facilities).

6.2 Transition for DS1 and DS3 Dedicated Transport Including DS1 and DS3 Entrance Facilities

6.2.1 For purposes of this Section 6.2, the Transition Period for the Embedded Base of DS1 and DS3 Dedicated Transport, Embedded Base Entrance Facilities and for Excess DS1 and DS3 Dedicated Transport, is the twelve (12) month period beginning March 11, 2005 and ending March 10, 2006.

6.2.2 For purposes of this Section 6.2, Embedded Base means DS1 and DS3 Dedicated Transport that were in service for KMC III as of March 10, 2005 in those wire centers that, as of such date, met the criteria set forth in Section 6.2.6.1 or 6.2.6.2. Subsequent disconnects or loss of customers shall be removed from the Embedded Base.

6.2.3 For purposes of this Section 6.2, Embedded Base Entrance Facilities means Entrance Facilities that were in service for KMC III as of March 10, 2005. Subsequent disconnects or loss of customers shall be removed from the Embedded Base.

6.2.4 For purposes of this Section 6, Excess DS1 and DS3 Dedicated Transport means those KMC III DS1 and DS3 Dedicated Transport facilities in service as of March 10, 2005, in excess of the caps set forth in Section 6.6. Subsequent disconnects and loss of End Users shall be removed from Excess DS1 and DS3 Loops.

6.2.5 For purposes of this Section 6.2, a Business Line is as defined in 47 C.F.R. § 51.5.

6.2.6 Notwithstanding anything to the contrary in this Agreement, BellSouth shall make available Dedicated Transport for the Wire Centers as described in this Section 6.2 only for KMC III's Embedded Base during the Transition Period:

6.2.6.1 DS1 Dedicated Transport where both wire centers at the end points of the route contain 38,000 Business Lines or four (4) or more fiber-based collocators.

6.2.6.2 DS3 Dedicated Transport where both wire centers at the end points of the route contain 24,000 or more Business Lines or three (3) or more fiber-based collocators.

6.2.6.3 A list of wire centers meeting the criteria set forth in Section 6.2.6.1 or 6.2.6.2 above as of March 10, 2005, is available on BellSouth's Interconnection Services Web site at www.interconnection.bellsouth.com, as (Initial Center List)..

6.2.6.4 Notwithstanding anything to the contrary in this Agreement, BellSouth shall make available Entrance Facilities only for KMC III's Embedded Base Entrance Facilities and only during the Transition Period.

6.2.6.5 Notwithstanding the Effective Date of this Agreement, during the Transition Period, the rates for KMC III's Embedded Base of DS1 and DS3 Dedicated Transport and for KMC III's Excess DS1 and DS3 Dedicated Transport, as described in this Section 6.2 shall be as set forth in Exhibit B and the rates for KMC III's Embedded Base of Entrance Facilities as described in this Section 6.2 shall be as set forth in Exhibit A.

6.2.6.6 The Transition Period shall apply only to (1) KMC III's Embedded Base and Embedded Base of Entrance Facilities; and (2) KMC III's Excess DS1 and DS3 Dedicated Transport. KMC III shall not add new Entrance Facilities pursuant to this Agreement. Further, KMC III shall not add new DS1 or DS3 Dedicated Transport as described in this Section 6.2 pursuant to this Agreement, except pursuant to the self-certification process as set forth in Section 1.7 of this Attachment and as set forth in Section 6.2.6.10 below.

6.2.6.7 Once a wire center exceeds either of the thresholds set forth in this Section 6.2.6.1 or 6.2.6.2, no future DS1 Dedicated Transport unbundling will be required in that wire center.

6.2.6.8 Once a wire center exceeds either of the thresholds set forth in Section 6.2.6.1 or 6.2.6.2, no future DS3 Dedicated Transport will be required in that wire center.

6.2.6.9 No later than December 9, 2005, KMC III shall submit spreadsheet(s) identifying all of the Embedded Base of circuits, Embedded Base of Entrance Facilities and Excess DS1 and DS3 Dedicated Transport to be either disconnected or converted to other BellSouth services as Conversions pursuant to Section 1.5. The Parties shall negotiate a project schedule for the Conversion of the Embedded Base, Embedded Base of Entrance Facilities and Excess DS1 and DS3 Dedicated Transport.

6.2.6.9.1 If KMC III fails to submit the spreadsheet(s) specified in Section 6.2.9 above for all of its Embedded Base prior to December 9, 2005, BellSouth will identify KMC

III's remaining Embedded Base of circuits and Embedded Base Entrance Facilities, if any, and will transition such circuits to the equivalent tariffed BellSouth service(s). Those circuits identified and transitioned by BellSouth pursuant to this Section 6.2.9.1 shall be subject to all applicable disconnect charges as set forth in this Agreement and the full non-recurring charges for installation of the equivalent tariffed BellSouth service as set forth in BellSouth's tariffs.

6.2.6.9.2 For Embedded Base circuits and Embedded Base Entrance Facilities Converted pursuant to Section 6.2.9 or transitioned pursuant to 6.2.9.1, a recurring tariff charge shall apply to each circuit as of the earlier of the date each circuit is Converted or transitioned, as applicable, or March 11, 2006.

6.2.10 Modifications and Updates to the Wire Center List and Subsequent Transition Periods

6.2.10.1 In the event BellSouth identifies additional wire centers that meet the criteria set forth in Section 6.2.6.1 or 6.2.6.2, but that were not included in the Initial Wire Center List, BellSouth shall include such additional wire centers in a CNL. Each such list of additional wire centers shall be considered a Subsequent Wire Center List.

6.2.10.2 Effective ten (10) business days after the date of a BellSouth CNL providing a Subsequent Wire Center List, BellSouth shall not be required to provide DS1 and DS3 Dedicated Transport, as applicable, in such additional wire center(s), except pursuant to the self-certification process as set forth in Section 1.7 of this Attachment.

6.2.10.3 For purposes of Section 6.2.10, BellSouth shall make available DS1 and DS3 Dedicated Transport that was in service for KMC III in a wire center on the Subsequent Wire Center List as of the tenth (10th) business day after the date of BellSouth's CNL identifying the Subsequent Wire Center List (Subsequent Embedded Base) until ninety (90) days after the tenth (10th) business day from the date of BellSouth's CNL identifying the Subsequent Wire Center List (Subsequent Transition Period).

6.2.10.4 Subsequent disconnects or loss of End Users shall be removed from the Subsequent Embedded Base.

6.2.10.5 The rates set forth in Exhibit B shall apply to the Subsequent Embedded Base during the Subsequent Transition Period.

6.2.10.6 No later than forty (40) days from BellSouth's CNL identifying the Subsequent Wire Center List KMC III shall submit a spreadsheet(s) identifying the Subsequent Embedded Base of circuits to be disconnected or converted to other BellSouth

services. The Parties shall negotiate a project schedule for the Conversion of the Subsequent Embedded Base.

6.2.10.6.1 If KMC III fails to submit the spreadsheet(s) specified in Section 6.2.10.6 above for all of its Subsequent Embedded Base within forty (40) days after the date of BellSouth's CNL identifying the Subsequent Wire Center List, BellSouth will identify KMC III's remaining Subsequent Embedded Base, if any, and will transition such circuits to the equivalent tariffed BellSouth service(s). Those circuits identified and transitioned by BellSouth shall be subject to the applicable disconnect charges as set forth in this Agreement and the full nonrecurring charges for installation of the equivalent tariffed BellSouth service as set forth in BellSouth's tariffs.

6.2.10.6.2 For Subsequent Embedded Base circuits converted pursuant to Section 6.2.10.6 or transitioned pursuant to Section 6.2.10.6.1, the recurring tariff charges shall apply as of the earlier of the date each circuit is converted or transitioned, as applicable, or the first day after the end of the Subsequent Transition Period.

6.3 BellSouth shall:

6.3.1 Provide KMC III exclusive use of Dedicated Transport to a particular customer or carrier;

6.3.2 Provide all technically feasible features, functions, and capabilities of Dedicated Transport as outlined within the technical requirements of this Section;

6.3.3 Permit, to the extent technically feasible, KMC III to connect Dedicated Transport to equipment designated by KMC III, including but not limited to, KMC III's collocated facilities; and

6.3.4 Permit, to the extent technically feasible and on a nondiscriminatory basis, KMC III to obtain the functionality provided by BellSouth's digital cross-connect systems.

6.4 BellSouth shall offer Dedicated Transport:

6.4.1 As capacity on a shared facility; and

6.4.2 As a circuit (i.e., DS0, DS1, DS3, and STS-1) dedicated to KMC III.

6.5 Dedicated Transport may be provided over facilities such as optical fiber, copper twisted pair, and coaxial cable, and shall include transmission equipment such as line terminating equipment, amplifiers, and regenerators.

6.6 KMC III may obtain a maximum of ten (10) unbundled DS1 Dedicated Transport circuits or twelve (12) unbundled dedicated DS3 circuits, or their equivalent, for any single route where the respective Dedicated Transport is available as a

Network Element. Additional capacity may be purchased pursuant to the rates, terms and conditions as set forth in the applicable tariff. A route is defined as a transmission path between one (1) of BellSouth's wire centers or switches and another of BellSouth's wire centers or switches. A route between two (2) points may pass through one (1) or more intermediate wire centers or switches. Transmission paths between identical end points are the same "route", irrespective of whether they pass through the same intermediate wire centers or switches, if any.

6.6.1 Any request to re-terminate one (1) end of a circuit will require the issuance of new service and disconnection of the existing service and the applicable charges in Exhibit A shall apply, and the re-terminated circuit shall be considered a new circuit as of the installation date.

6.7 Technical Requirements

6.7.1 The entire designated transmission service (e.g., DS0, DS1, and DS3) shall be dedicated to KMC III designated traffic.

6.7.2 For DS1 or DS3 circuits, Dedicated Transport shall at a minimum meet the performance, availability, jitter, and delay requirements specified for Customer Interface to Central Office (CI to CO) connections in the applicable industry standards.

6.7.3 BellSouth shall offer the following interface transmission rates for Dedicated Transport:

6.7.3.1 DS0 Equivalent;

6.7.3.2 DS1;

6.7.3.3 DS3; and

6.7.3.4 SDH (Synchronous Digital Hierarchy) Standard interface rates are in accordance with International Telecommunications Union (ITU) Recommendation G.707 and Plesiochronous Digital Hierarchy (PDH) rates per ITU Recommendation G.704.

6.7.4 BellSouth shall design Dedicated Transport according to its network infrastructure. KMC III shall specify the termination points for Dedicated Transport.

6.7.5 At a minimum, Dedicated Transport shall meet each of the requirements set forth in the applicable industry technical references.

6.7.6 BellSouth Technical References:

6.7.6.1 TR-TSY-000191 Alarm Indication Signals Requirements and Objectives, Issue 1, May 1986.

6.7.6.2 TR 73501 LightGate®Service Interface and Performance Specifications, Issue D, June 1995.

6.7.6.3 TR 73525 MegaLink®Service, MegaLink Channel Service and MegaLink Plus Service Interface and Performance Specifications, Issue C, May 1996.

6.8 Unbundled Channelization (Multiplexing)

6.8.1 Unbundled Channelization (UC) provides the optional multiplexing capability that will allow a DS1 (1.544 Mbps) or DS3 (44.736 Mbps) or STS-1 (51.84 Mbps) UNE or collocation cross connect to be multiplexed or channelized at a BellSouth central office. Channelization can be accomplished through the use of a multiplexer or a digital cross-connect system at the discretion of BellSouth. Once UC has been installed, KMC III may request channel activation on an as needed basis and BellSouth shall connect the requested facilities via Central Office Channel Interfaces (COCIs). The COCI must be compatible with the lower capacity facility and ordered with the lower capacity facility. This service is available as defined in NECA 4. Channelization may be incorporated within dedicated transport or ordered as a stand-alone capability, which requires either the high or low speed side to be connected to collocation.

6.8.2 BellSouth shall make available the following channelization systems and interfaces:

6.8.2.1 DS1 Channelization System: channelizes a DS1 signal into a maximum of twenty-four (24) DS0s. The following Central Office Channel Interfaces (COCI) are available: Voice Grade, Digital Data and ISDN;

6.8.2.2 DS3 Channelization System: channelizes a DS3 signal into a maximum of twenty-eight (28) DS1s. A DS1 COCI is available with this system;

6.8.2.3 STS-1 Channelization System: channelizes a STS-1 signal into a maximum of twenty-eight (28) DS1s. A DS1 COCI is available with this system.

6.8.3 Technical Requirements

6.8.3.1 In order to assure proper operation with BellSouth provided central office multiplexing functionality, KMC III's channelization equipment must adhere strictly to form and protocol standards. KMC III must also adhere to such applicable industry standards for the multiplex channel bank, for voice frequency encoding, for various signaling schemes, and for sub rate digital access.

7 Call Related Databases and Signaling

7.1 911 and E911 databases. BellSouth shall provide KMC III with nondiscriminatory access to 911 and E911 databases on an unbundled basis, in accordance with 47 C.F.R. § 319(f).

7.2 Call Related Databases are the databases other than OSS, that are used in signaling networks for billing and collection, or the transmission, routing or other provision of a telecommunications service. BellSouth shall only provide unbundled access to BellSouth Switched Access (SWA) 8XX Toll Free Dialing Ten Digit Screening Service, Line Information Database (LIDB), Signaling, Signaling Link Transport, Signaling Transfer Points, SS7 AIN Access, Service Control Point\Databases, Local Number Portability Databases, SS7 Network Interconnection, and Calling Name (CNAM) Database Service at the prices set forth herein where BellSouth is required to provide and is providing unbundled access to local circuit switching to KMC III. SS7 Network Interconnection and Signaling Link Transport shall be provided at the TELRIC-compliant, Commission approved rates set forth in Exhibit A of Attachment 3, regardless of whether BellSouth is required to provide and is providing unbundled access to local circuit switching to KMC III.

7.3 The BellSouth SWA 8XX Toll Free Dialing Ten Digit Screening Service database (8XX SCP Database) is a SCP that contains customer record information and the functionality to provide call-handling instructions for 8XX calls. The 8XX SCP IN software stores data downloaded from the national SMS/8XX database and provides the routing instructions in response to queries from the SSP or tandem. The BellSouth SWA 8XX Toll Free Dialing Ten Digit Screening Service (8XX TFD Service) utilizes the 8XX SCP Database to provide identification and routing of the 8XX calls, based on the ten (10) digits dialed. At KMC III's option, 8XX TFD Service is provided with or without POTS number delivery, dialing number delivery, and other optional complex features as selected by KMC III.

7.3.1 The 8XX SCP Database is designated to receive and respond to queries using the ANSI Specification of Signaling System Seven (SS7) protocol.

7.3.2 BellSouth provides four (4) options of this service, two (2) that provide POTS number delivery and two (2) that provide Toll Free Dialing Number Delivery.

7.4 LIDB

7.4.1 LIDB is a transaction-oriented database accessible through Common Channel Signaling (CCS) networks. For access to LIDB, KMC III must purchase appropriate signaling links pursuant to Section 10 below. LIDB contains records associated with End User Line Numbers and Special Billing Numbers. LIDB accepts queries from other Network Elements and provides appropriate responses. The query originator need not be the owner of LIDB data. LIDB queries include functions such as screening billed numbers that provides the ability to accept Collect or Third Number Billing calls and validation of Telephone Line Number based non-proprietary calling cards. The interface for the LIDB functionality is the

interface between BellSouth's CCS network and other CCS networks. LIDB also interfaces to administrative systems.

7.4.2 Technical Requirements

7.4.2.1 BellSouth will offer to KMC III any additional capabilities that are developed for LIDB during the life of this Agreement.

7.4.2.2 BellSouth shall process KMC III's customer records in LIDB at least at parity with BellSouth customer records, with respect to other LIDB functions. BellSouth shall indicate to KMC III what additional functions (if any) are performed by LIDB in the BellSouth network.

7.4.2.3 Within two (2) weeks after a request by KMC III, BellSouth shall provide KMC III with a list of the customer data items, which KMC III would have to provide in order to support each required LIDB function. The list shall indicate which data items are essential to LIDB function and which are required only to support certain services. For each data item, the list shall show the data formats, the acceptable values of the data item and the meaning of those values.

7.4.2.4 BellSouth shall provide LIDB systems for which operating deficiencies that would result in calls being blocked shall not exceed thirty (30) minutes per year.

7.4.2.5 BellSouth shall provide LIDB systems for which operating deficiencies that would not result in calls being blocked shall not exceed twelve (12) hours per year.

7.4.2.6 BellSouth shall provide LIDB systems for which the LIDB function shall be in overload no more than twelve (12) hours per year.

7.4.2.7 All additions, updates and deletions of KMC III data to the LIDB shall be solely at the direction of KMC III. Such direction from KMC III will not be required where the addition, update or deletion is necessary to perform standard fraud control measures (e.g., calling card auto-deactivation).

7.4.2.8 BellSouth shall provide priority updates to LIDB for KMC III data upon KMC III's request (e.g., to support fraud detection)**,** via password-protected telephone card, facsimile, or electronic mail within one hour of notice from the established BellSouth contact.

7.4.2.9 BellSouth shall provide LIDB systems such that no more than 0.01% of KMC III customer records will be missing from LIDB, as measured by KMC III audits. BellSouth will audit KMC III records in LIDB against Data Base Administration System (DBAS) to identify record mismatches and provide this data to a designated KMC III contact person to resolve the status of the records and BellSouth will update system appropriately. BellSouth will refer record of mismatches to KMC III within one (1) business day of audit. Once reconciled records are received back from KMC III, BellSouth will update LIDB the same

business day if less than five hundred (500) records are received before 1:00PM Central Time. If more than five hundred (500) records are received, BellSouth will contact KMC III to negotiate a time frame for the updates, not to exceed three (3) business days.

7.4.2.10 BellSouth shall perform backup and recovery of all of KMC III's data in LIDB including sending to LIDB all changes made since the date of the most recent backup copy, in at least the same time frame BellSouth performs backup and recovery of BellSouth data in LIDB for itself. Currently, BellSouth performs backups of the LIDB for itself on a weekly basis; and when a new software release is scheduled, a backup is performed prior to loading the new release.

7.4.2.11 BellSouth shall provide KMC III with LIDB reports of data which are missing or contain errors, as well as any misrouted errors, within a reasonable time period as negotiated between KMC III and BellSouth.

7.4.2.12 BellSouth shall prevent any access to or use of KMC III data in LIDB by BellSouth personnel that are outside of established administrative and fraud control personnel, or by any other Party that is not authorized by KMC III in writing.

7.4.2.13 BellSouth shall provide KMC III performance of the LIDB Data Screening function, which allows a LIDB to completely or partially deny specific query originators access to LIDB data owned by specific data owners, for Customer Data that is part of an NPA-NXX or RAO-0/1XX wholly or partially owned by KMC III at least at parity with BellSouth Customer Data. BellSouth shall obtain from KMC III the screening information associated with LIDB Data Screening of KMC III data in accordance with this requirement. BellSouth currently does not have LIDB Data Screening capabilities. When such capability is available, BellSouth shall offer it to KMC III under the BFR/NBR process as set forth in Attachment 11.

7.4.2.14 BellSouth shall accept queries to LIDB associated with KMC III customer records and shall return responses in accordance with industry standards.

7.4.2.15 BellSouth shall provide mean processing time at the LIDB within 0.50 seconds under normal conditions as defined in industry standards.

7.4.2.16 BellSouth shall provide processing time at the LIDB within one (1) second for ninety-nine percent (99%) of all messages under normal conditions as defined in industry standards.

7.4.3 <u>Interface Requirements</u>

7.4.3.1 BellSouth shall offer LIDB in accordance with the requirements of this subsection.

7.4.3.2 The interface to LIDB shall be in accordance with the technical references contained within.

7.4.3.3 The CCS interface to LIDB shall be the standard interface described herein.

7.4.3.4 The LIDB Data Base interpretation of the ANSI-TCAP messages shall comply with the technical reference herein. Global Title Translation (GTT) shall be maintained in the signaling network in order to support signaling network routing to the LIDB.

7.4.3.5 The application of the LIDB rates contained in Exhibit A will be based on a Percent CLEC LIDB Usage (PCLU) factor. KMC III shall provide BellSouth a PCLU. The PCLU will be applied to determine the percentage of total LIDB usage to be billed to the other Party at local rates. Requirements associated with PCLU calculation and reporting shall be as set forth in BellSouth's Jurisdictional Factors Reporting Guide, as it is amended from time to time, attached to Attachment 3 as Exhibit F.

7.5 Signaling

7.5.1 BellSouth shall offer access to signaling and access to BellSouth's signaling databases subject to compatibility testing and at the rates set forth in Exhibit A. BellSouth may provide mediated access to BellSouth signaling systems and databases. Available signaling elements include signaling links, signal transfer points and service control points. Signaling functionality will be available with both A-link and B-link connectivity.

7.5.2 Signaling Link Transport

7.5.2.1 Signaling Link Transport is a set of two (2) or four (4) dedicated 56 kbps transmission paths between KMC III designated Signaling Points of Interconnection that provide appropriate physical diversity.

7.5.3 Technical Requirements

7.5.3.1 Signaling Link Transport shall consist of full duplex mode 56 kbps transmission paths and shall perform in the following two (2) ways:

7.5.3.1.1 As an "A-link" Signaling Link Transport is a connection between a switch or SCP and a home Signaling Transfer Point switch pair; and

7.5.3.1.2 As a "B-link" Signaling Link Transport is a connection between two Signaling Transfer Point switch pairs in different company networks (e.g., between two (2) Signaling Transfer Point switch pairs for two (2) CLECs).

7.5.4 Signaling Link Transport shall consist of two (2) or more signaling link layers as follows:

7.5.4.1 An A-link layer shall consist of two (2) links. There shall be no more than two (2) minutes down time per year for an A-link layer.

7.5.4.2 A B-link layer shall consist of four (4) links. There shall be negligible (less than two (2) seconds) down time per year for a B-link layer. A signaling link layer shall satisfy interoffice and intraoffice diversity of facilities and equipment, such that:

7.5.4.2.1 No single failure of facilities or equipment causes the failure of both links in an A-link layer (i.e., the links should be provided on a minimum of two (2) separate physical paths end-to-end); and

7.5.4.2.2 No two (2) concurrent failures of facilities or equipment shall cause the failure of all four (4) links in a B-link layer (i.e., the links should be provided on a minimum of three (3) separate physical paths end-to-end).

7.5.5 Interface Requirements

7.5.5.1 There shall be a DS1 (1.544 Mbps) interface at KMC III's designated SPOIs. Each 56 kbps transmission path shall appear as a DS0 channel within the DS1 interface.

7.5.6 Signaling Transfer Points

7.5.6.1 A STP is a signaling network function that includes all of the capabilities provided by the signaling transfer point switches (STPS) and their associated signaling links that enables the exchange of SS7 messages among and between switching elements, database elements and STPSs.

7.5.6.2 Technical Requirements

7.5.6.2.1 STPs shall provide access to BellSouth Local Switching or Tandem Switching and to BellSouth Service Control Points/Databases connected to BellSouth SS7 network. STPs also provide access to third-party local or tandem switching and third-party-provided STPs.

7.5.6.2.2 The connectivity provided by STPs shall fully support the functions of all other Network Elements connected to the BellSouth SS7 network. This includes the use of the BellSouth SS7 network to convey messages that neither originate nor terminate at a signaling end point directly connected to the BellSouth SS7 network (i.e., transit messages). When the BellSouth SS7 network is used to convey transit messages, there shall be no alteration of the Integrated Services Digital Network User Part or Transaction Capabilities Application Part (TCAP) user data that constitutes the content of the message.

7.5.6.2.3 If a BellSouth tandem switch routes traffic, based on dialed or translated digits, on SS7 trunks between a KMC III local switch and third party local switch, the BellSouth SS7 network shall convey the TCAP messages that are necessary to

provide Call Management features (Automatic Callback, Automatic Recall, and Screening List Editing) between KMC III local STPs and the STPs that provide connectivity with the third party local switch, even if the third party local switch is not directly connected to BellSouth STPs.

7.5.6.2.4 STPs shall provide all functions of the SCCP necessary for Class 0 (basic connectionless) service as defined in Telcordia ANSI Interconnection Requirements. This includes GTT and SCCP Management procedures, as specified in ANSI T1.112.4. Where the destination signaling point is a KMC III or third party local or tandem switching system directly connected to BellSouth SS7 network, BellSouth shall perform final GTT of messages to the destination and SCCP Subsystem Management of the destination. In all other cases, BellSouth shall perform intermediate GTT of messages to a gateway pair of STPs in an SS7 network connected with BellSouth SS7 network and shall not perform SCCP Subsystem Management of the destination. If BellSouth performs final GTT to a KMC III database, then KMC III agrees to provide BellSouth with the Destination Point Code for KMC III database.

7.5.6.2.5 STPs shall provide all functions of the Operations, Maintenance and Administration Part (OMAP) as specified in applicable industry standard technical references, which may include, where available in BellSouth's network, MTP Routing Verification Test (MRVT) and SCCP Routing Verification Test (SRVT).

7.5.6.2.6 Where the destination signaling point is a BellSouth local or tandem switching system or database, or is a KMC III or third party local or tandem switching system directly connected to the BellSouth SS7 network, STPs shall perform MRVT and SRVT to the destination signaling point. In all other cases, STPs shall perform MRVT and SRVT to a gateway pair of STPs in an SS7 network connected with the BellSouth SS7 network. This requirement may be superseded by the specifications for Internetwork MRVT and SRVT when these become approved ANSI standards and available capabilities of BellSouth STPs.

7.5.6.2.7 KMC III may choose to route SS7 signaling information (e.g., ISUP, TSAP) from KMC III's signaling network to another LECs or CMRS provider's signaling network via BellSouth's signaling network for the purpose of exchanging call processing/network information between KMC III and the other LEC's or CMRS provider's network, whether or not BellSouth has a trunk to the terminating switching, provided that, where BellSouth does not have such a trunk, KMC III furnishes BellSouth with:

7.5.6.2.8 the destination point codes (DPCs) of all the LEC or CMRS provider switches to which it wishes to send transit signaling;

7.5.6.2.9 the identify of the STPs in BellSouth's network in which each DPC will be translated; and

7.5.6.2.10 the identity of the STPs in the other signaling network to which such transit signaling will be sent.

7.5.7 SS7 AIN Access

7.5.7.1 When technically feasible and upon request by KMC III, SS7 AIN Access shall be made available in association with switching. SS7 AIN Access is the provisioning of AIN 0.1 triggers in an equipped BellSouth local switch and interconnection of the BellSouth SS7 network with KMC III's SS7 network to exchange TCAP queries and responses with a KMC III SCP.

7.5.7.2 SS7 AIN Access shall provide KMC III SCP access to an equipped BellSouth local switch via interconnection of BellSouth's SS7 and KMC III SS7 Networks. BellSouth shall offer SS7 AIN Access through its STPs. If BellSouth requires a mediation device on any part of its network specific to this form of access, BellSouth must route its messages in the same manner. The interconnection arrangement shall result in the BellSouth local switch recognizing the KMC III SCP as at least at parity with BellSouth's SCPs in terms of interfaces, performance and capabilities.

7.5.8 Interface Requirements

7.5.8.1 BellSouth shall provide the following STP options to connect KMC III or KMC III-designated local switching systems to the BellSouth SS7 network:

7.5.8.1.1 An A-link interface from KMC III local switching systems; and,

7.5.8.1.2 A B-link interface from KMC III local STPs.

7.5.8.2 Each type of interface shall be provided by one (1) or more layers of signaling links.

7.5.8.3 The Signaling Point of Interconnection (SPOI) for each link shall be located at a cross-connect element in the CO where the BellSouth STP is located. There shall be a DS1 or higher rate transport interface at each of the SPOIs. Each signaling link shall appear as a DS0 channel within the DS1 or higher rate interface.

7.5.8.4 BellSouth shall provide intraoffice diversity between the SPOI and BellSouth STPs so that no single failure of intraoffice facilities or equipment shall cause the failure of both B-links in a layer connecting to a BellSouth STP.

7.5.8.5 STPs shall provide all functions of the MTP as defined in the applicable industry standard technical references.

7.5.9 Message Screening

7.5.9.1 BellSouth shall set message screening parameters so as to accept valid messages from KMC III local or tandem switching systems destined to any signaling point

within BellSouth's SS7 network where the KMC III switching system has a valid signaling relationship.

7.5.9.2 BellSouth shall set message screening parameters so as to pass valid messages from KMC III local or tandem switching systems destined to any signaling point or network accessed through BellSouth's SS7 network where the KMC III switching system has a valid signaling relationship.

7.5.9.3 BellSouth shall set message screening parameters so as to accept and pass/send valid messages destined to and from KMC III from any signaling point or network interconnected through BellSouth's SS7 network where the KMC III SCP has a valid signaling relationship.

7.5.10 SCP/Databases

7.5.10.1 Call Related Databases provide the storage of, access to, and manipulation of information required to offer a particular service and/or capability. BellSouth shall provide access to the following Databases: Local Number Portability (LNP), LIDB, Toll Free Number Database, ALI/DMS, and CNAM. BellSouth also provides access to Service Creation Environment and Service Management System (SCE/SMS) application databases and Directory Assistance.

7.5.10.2 A SCP is deployed in a SS7 network that executes service application logic in response to SS7 queries sent to it by a switching system also connected to the SS7 network. Service Management Systems provide operational interfaces to allow for provisioning, administration and maintenance of subscriber data and service application data stored in SCPs.

7.5.11 Technical Requirements for SCPs/Databases

7.5.11.1 BellSouth shall provide physical access to SCPs through the SS7 network and protocols with TCAP as the application layer protocol.

7.5.11.2 BellSouth shall provide physical interconnection to databases via industry standard interfaces and protocols (e.g., SS7, ISDN and X.25).

7.5.11.3 The reliability of interconnection options shall be consistent with requirements for diversity and survivability.

7.6 Database Availability

7.6.1 Call processing databases shall have a maximum unscheduled availability of thirty (30) minutes per year. Unavailability due to software and hardware upgrades shall be scheduled during minimal usage periods and only be undertaken upon proper notification to providers, which might be impacted. Any downtime associated with the provision of call processing related databases will impact all service providers, including BellSouth, equally.

7.6.2 The operational interface provided by BellSouth shall complete Database transactions (i.e., add, modify, delete) for KMC III's customer records stored in BellSouth databases within three (3) business days, or sooner where BellSouth provisions its own customer records within a shorter interval.

7.7 Local Number Portability Database

7.7.1 The Permanent Number Portability (PNP) database supplies routing numbers for calls involving numbers that have been ported from one (1) local service provider to another. BellSouth agrees to provide access to the PNP database at rates, terms and conditions as set forth by BellSouth and in accordance with an effective FCC or Commission directive.

7.8 SS7 Network Interconnection

7.8.1 SS7 Network Interconnection is the interconnection of KMC III local STPS or KMC III local or tandem switching systems with BellSouth signaling transfer point switches. This interconnection provides connectivity that enables the exchange of SS7 messages among BellSouth switching systems and databases, KMC III local or tandem switching systems, and other third-party switching systems directly connected to the BellSouth SS7 network.

7.8.2 The connectivity provided by SS7 Network Interconnection shall fully support the functions of BellSouth switching systems and databases and KMC III or other third-party switching systems with A-link access to the BellSouth SS7 network.

7.8.3 If traffic is routed based on dialed or translated digits between a KMC III local switching system and a BellSouth or other third-party local switching system, either directly or via a BellSouth tandem switching system, then it is a requirement that the BellSouth SS7 network convey via SS7 Network Interconnection the TCAP messages that are necessary to provide Call Management services (Automatic Callback, Automatic Recall, and Screening List Editing) between the KMC III local signaling transfer point switches and BellSouth or other third-party local switch.

7.8.4 SS7 Network Interconnection shall provide:

7.8.4.1 Signaling Data Link functions, as specified in ANSI T1.111.2;

7.8.4.2 Signaling Link functions, as specified in ANSI T1.111.3; and

7.8.4.3 Signaling Network Management functions, as specified in ANSI T1.111.4.

7.8.5 SS7 Network Interconnection shall provide all functions of the SCCP necessary for Class 0 (basic connectionless) service as specified in ANSI T1.112. This includes GTT and SCCP Management procedures as specified in ANSI T1.112.4. Where the destination signaling point is a BellSouth switching system or DB, or is

another third-party local or tandem switching system directly connected to the BellSouth SS7 network, SS7 Network Interconnection shall include final GTT of messages to the destination and SCCP Subsystem Management of the destination. Where the destination signaling point is a KMC III local or tandem switching system, SS7 Network Interconnection shall include intermediate GTT of messages to a gateway pair of KMC III local STPs and shall not include SCCP Subsystem Management of the destination.

7.8.6 SS7 Network Interconnection shall provide all functions of the Integrated Services Digital Network User Part as specified in ANSI T1.113.

7.8.7 SS7 Network Interconnection shall provide all functions of the TCAP as specified in ANSI T1.114.

7.8.8 If Internetwork MRVT and SRVT become approved ANSI standards and available capabilities of BellSouth STPs, SS7 Network Interconnection may provide these functions of the OMAP.

7.8.9 Interface Requirements

7.8.9.1 The following SS7 Network Interconnection interface options are available to connect KMC III or KMC III-designated local or tandem switching systems or signaling transfer point switches to the BellSouth SS7 network:

7.8.9.2 A-link interface from KMC III local or tandem switching systems; and

7.8.9.3 B-link interface from KMC III STPs.

7.8.9.4 The Signaling Point of Interconnection for each link shall be located at a cross-connect element in the central office where the BellSouth STP is located. There shall be a DS1 or higher rate transport interface at each of the Signaling Points of interconnection. Each signaling link shall appear as a DS0 channel within the DS1 or higher rate interface.

7.8.9.5 BellSouth shall provide intraoffice diversity between the Signaling Points of Interconnection and the BellSouth STP, so that no single failure of intraoffice facilities or equipment shall cause the failure of both B-links in a layer connecting to a BellSouth STP.

7.8.9.6 The protocol interface requirements for SS7 Network Interconnection include the MTP, ISDNUP, SCCP, and TCAP. These protocol interfaces shall conform to the applicable industry standard technical references.

7.8.9.7 BellSouth shall set message screening parameters to accept messages from KMC III local or tandem switching systems destined to any signaling point in the BellSouth SS7 network with which the KMC III switching system has a valid signaling relationship.

7.8.9.8 SS7 Network Interconnection shall be equal to or better than all of the requirements for SS7 Network Interconnection set forth in the applicable industry standard technical references.

8 ALI/DMS

8.1 The ALI/DMS Database contains end user information (including name, address, telephone information, and sometimes special information from the local service provider or end user) used to determine to which PSAP to route the call. The ALI/DMS database is used to provide enhanced routing flexibility for E911. KMC III will be required to provide BellSouth daily updates to the E911 database. KMC III shall also be responsible for providing BellSouth with complete and accurate data for submission to the 911/E911 database for the purpose of providing 911/E911 service to KMC III's end users.

8.2 Technical Requirements

8.2.1 BellSouth shall provide KMC III the capability of providing updates to the ALI/DMS database. BellSouth shall provide error reports from the ALI/DMS database to KMC III after KMC III provides end user information for input into the ALI/DMS database.

8.2.2 KMC III shall conform to the National Emergency Number Association (NENA) recommended standards for LNP and updating the ALI/DMS database.

9 Calling Name (CNAM) Database Service

9.1 CNAM is the ability to associate a name with the calling party number, allowing the customer (to which a call is being terminated) to view the calling party's name before the call is answered. The calling party's information is accessed by queries launched to the CNAM database. This service also provides KMC III the opportunity to load and store its subscriber names in the BellSouth CNAM SCPs.

9.2 KMC III shall submit to BellSouth a notice of its intent to access and utilize BellSouth CNAM Database Services. Said notice shall be in writing no less than sixty (60) days prior to KMC III's access to BellSouth's CNAM Database Services and shall be addressed to KMC III's Local Contract Manager.

9.2.1 KMC III's customers' names and numbers related to UNE-P Services and shall be stored in the BellSouth CNAM database, and shall be available, on a per query basis only, to all entities that launch queries to the BellSouth CNAM database. BellSouth, at its sole discretion, may opt to interconnect with and query other calling name databases. In the event BellSouth does not query a third party calling name database that stores the calling party's information, BellSouth cannot deliver the calling party's information to a called customer. In addition, BellSouth cannot deliver the calling party's information where the calling party subscribes to any service that would block or otherwise cause the information to be unavailable.

9.2.2 For each KMC III customer that subscribes to a switch based vertical feature providing calling name information to that customer for calls received, BellSouth will launch a query on a per call basis to the BellSouth CNAM database, or, subject to Section 9.2.1 above, to a third party calling name database, to provide calling name information, if available, to KMC III's customer. KMC III shall pay the rates set forth in Exhibit A, on a per query basis, for each query to the BellSouth CNAM database made on behalf of an KMC III customer that subscribes to the appropriate vertical features that support Caller ID or a variation thereof. In addition, KMC III shall reimburse BellSouth for any charges BellSouth pays to third party calling name database providers for queries launched to such database providers for the benefit of KMC III's customers.

9.3 BellSouth's provision of CNAM Database Services to KMC III requires interconnection from KMC III to BellSouth CNAM SCPs. Such interconnections shall be established pursuant to Attachment 3 of this Agreement.

9.4 In order to formulate a CNAM query to be sent to the BellSouth CNAM SCP, KMC III shall provide its own CNAM SSP. KMC III's CNAM SSPs must be compliant with TR-NWT-001188, "CLASS Calling Name Delivery Generic Requirements".

9.5 If KMC III elects to access the BellSouth CNAM SCP via a third party CCS7 transport provider, the third party CCS7 provider shall interconnect with the BellSouth CCS7 network according to BellSouth's Common Channel Signaling Interconnection Guidelines and Telcordia's CCS Network Interface Specification document, TR-TSV-000905. In addition, the third party provider shall establish CCS7 interconnection at the BellSouth Local Signal Transfer Points (LSTPs) serving the BellSouth CNAM SCPs that KMC III desires to query.

9.6 If KMC III queries the BellSouth CNAM SCP via a third party national SS7 transport provider, the third party SS7 provider shall interconnect with the BellSouth CCS7 network according to BellSouth's Common Channel Signaling Interconnection Guidelines and Telcordia's CCS Network Interface Specification document, TR-TSV-000905. In addition, the third party provider shall establish SS7 interconnection at one (1) or more of the BellSouth Gateway STPs. The payment of all costs associated with the transport of SS7 signals via a third party will be established by mutual agreement of the Parties and this Agreement shall be amended in accordance with modification of the General Terms and Conditions incorporated herein by this reference.

9.7 The mechanism to be used by KMC III for initial CNAM record load and/or updates shall be determined by mutual agreement. The initial load and all updates shall be provided by KMC III in the BellSouth specified format and shall contain records for every working telephone number that can originate phone calls. It is the responsibility of KMC III to provide accurate information to BellSouth on a current basis.

9.8 Updates to the SMS shall occur no less than once a week, reflect service order activity affecting either name or telephone number, and involve only record additions, deletions or changes.

9.9 KMC III CNAM records provided for storage in the BellSouth CNAM SCP shall be available, on a SCP query basis only, to all Parties querying the BellSouth CNAM SCP. Further, CNAM service shall be provided by each Party consistent with state and/or federal regulation.

9.10 BellSouth currently does not have a billing mechanism for CNAM queries. BellSouth shall bill KMC III at the applicable rates set forth in Exhibit A based on a surrogate of two hundred and fifty-six (256) database queries per month per KMC III's customers with the Caller ID feature.

10 Service Creation Environment and Service Management System (SCE/SMS) Advanced Intelligent Network Access (AIN Tool Kit)

10.1 BellSouth's AIN Tool Kit shall provide KMC III the capability to create service applications in a BellSouth SCE and deploy those applications in a BellSouth SMS to a BellSouth SCP.

10.2 BellSouth's AIN Tool Kit shall provide access to SCE hardware, software, testing and technical support (e.g., help desk, system administrator) resources available to KMC III. Training, documentation, and technical support will address use of SCE and SMS access and administrative functions but will not include support for the creation of a specific service application. Scheduling procedures shall provide KMC III with access at parity to these resources.

10.3 BellSouth SCP shall partition and protect KMC III service logic and data from unauthorized access.

10.4 When KMC III selects AIN Tool Kit, BellSouth shall provide training, documentation, and technical support to enable KMC III to use BellSouth's AIN Tool Kit to create and administer applications.

10.5 KMC III access will be provided via remote data connection (e.g., dial-in, ISDN).

10.6 BellSouth shall allow KMC III to download data forms and/or tables to BellSouth SCP via BellSouth SMS without intervention from BellSouth.

11 Operational Support Systems (OSS)

11.1 BellSouth shall provide KMC III with nondiscriminatory access to operations support systems on an unbundled basis, in accordance with 47 C.F.R. **§** 51.319(g) and as set forth in Attachment 6. OSS functions consist of pre-ordering, ordering, provisioning, maintenance and repair, and billing functions supported by BellSouth's databases and information. BellSouth, as part of its duty to provide

access to the pre-ordering function, shall provide KMC III with nondiscriminatory access to the same detailed information about the loop that is available to BellSouth.

11.2 Denial/Restoral OSS Charge

11.2.1 In the event KMC III provides a list of customers to be denied and restored, rather than an LSR, each location on the list will require a separate PON and therefore will be billed as one (1) LSR per location.

11.3 Cancellation OSS Charge

11.3.1 KMC III will incur an OSS charge for an accepted LSR that is later canceled.

11.3.2 Supplements or clarifications to a previously billed LSR will not incur another OSS charge.

11.4 Network Elements and Other Services Manual Additive

11.4.1 The Commissions in some states have ordered per element manual additive nonrecurring charges for Network Elements and Other Services ordered by means other than one (1) of the interactive interfaces. These ordered Network Elements and Other Services manual additive nonrecurring charges will apply in these states, rather than the charge per LSR. The per element charges are listed in Exhibit A.

UNBUNDLED NETWORK ELEMENTS - Alabama

Attachment: 2 Ex. A

CATEGORY	RATE ELEMENTS	Interim	Zone	BCS	USOC	RATES ($) Rec	Nonrecurring First	Nonrecurring Add'l	Nonrecurring Disconnect First	Nonrecurring Disconnect Add'l	Svc Order Submitted Elec per LSR	Svc Order Submitted Manually per LSR	Incremental Charge - Manual Svc Order vs. Electronic- 1st	Incremental Charge - Manual Svc Order vs. Electronic- Add'l	Incremental Charge - Manual Svc Order vs. Electronic- Disc 1st	Incremental Charge - Manual Svc Order vs. Electronic- Disc Add'l
											OSS Rates ($)					
											SOMEC	SOMAN	SOMAN	SOMAN	SOMAN	SOMAN
The "Zone" shown in the sections for stand-alone loops or loops as part of a combination refers to Geographically Deaveraged UNE Zones. To view Geographically Deaveraged UNE Zone Designations by Central Office, refer to internet Website: http://www.interconnection.bellsouth.com/become_a_clec/html/interconnection.htm																
OPERATIONAL SUPPORT SYSTEMS (OSS) - "REGIONAL RATES"																
NOTE: (1) CLEC should contact its contract negotiator if it prefers the "state specific" OSS charges as ordered by the State Commissions. The OSS charges currently contained in this rate exhibit are the BellSouth "regional" service ordering charges. CLEC may elect either the state specific Commission ordered rates for the service ordering charges, or CLEC may elect the regional service ordering charge, however, CLEC can not obtain a mixture of the two regardless if CLEC has a interconnection contract established in each of the 9 states.																
NOTE: (2) Any element that can be ordered electronically will be billed according to the SOMEC rate listed in this category. Please refer to BellSouth's Local Ordering Handbook (LOH) to determine if a product can be ordered electronically. For those elements that cannot be ordered electronically at present per the LOH, the listed SOMEC rate in this category reflects the charge that would be billed to a CLEC once electronic ordering capabilities come on-line for that element. Otherwise, the manual ordering charge, SOMAN, will be applied to a CLECs bill when it submits an LSR to BellSouth.																
	OSS - Electronic Service Order Charge, Per Local Service Request (LSR) - UNE Only				SOMEC		3.50	0.00	3.50	0.00						
	OSS - Manual Service Order Charge, Per Local Service Request (LSR) - UNE Only				SOMAN		15.66	0.00	1.97	0.00						
UNE SERVICE DATE ADVANCEMENT CHARGE																
NOTE: The Expedite charge will be maintained commensurate with BellSouth's FCC No.1 Tariff, Section 5 as applicable.																
	UNE Expedite Charge per Circuit or Line Assignable USOC, per Day			UAL, UEANL, UCL, UEF, UDF, UEQ, UDL, UENTW, UDN, UEA, UHL, ULC, USL, U1T12, U1T48, U1TD1, U1TD3, U1TDX, U1TO3, U1TS1, U1TVX, UC1BC, UC1BL, UC1CC, UC1CL, UC1DC, UC1DL, UC1EC, UC1EL, UC1FC, UC1FL, UC1GC, UC1GL, UC1HC, UC1HL, UDL12, UDL48, UDLO3, UDLSX, UE3, ULD12, ULD48, ULDD1, ULDD3, ULDDX, ULDO3, ULDS1, ULDVX, UNC1X, UNC3X, UNCDX, UNCNX, UNCSX, UNCVX, UNLD1, UNLD3, UXTD1, UXTD3, UXTS1, U1TUC, U1TUD, U1TUB, U1TUA	SDASP		200.00									
ORDER MODIFICATION CHARGE																
	Order Modification Charge (OMC)						35.13	0.00	0.00	0.00						
	Order Modification Additional Dispatch Charge (OMCAD)						150.00	0.00	0.00	0.00						
UNBUNDLED EXCHANGE ACCESS LOOP																
2-WIRE ANALOG VOICE GRADE LOOP																
	2-Wire Analog Voice Grade Loop - Service Level 1- Zone 1		1	UEANL	UEAL2	12.58	37.81	17.56	23.49	5.30						
	2-Wire Analog Voice Grade Loop - Service Level 1- Zone 2		2	UEANL	UEAL2	21.05	37.81	17.56	23.49	5.30						
	2-Wire Analog Voice Grade Loop - Service Level 1- Zone 3		3	UEANL	UEAL2	34.34	37.81	17.56	23.49	5.30						
	2-Wire Analog Voice Grade Loop - Service Level 1- Zone 1		1	UEANL	UEASL	12.58	37.81	17.56	23.49	5.30						
	2-Wire Analog Voice Grade Loop - Service Level 1- Zone 2		2	UEANL	UEASL	21.05	37.81	17.56	23.49	5.30						
	2-Wire Analog Voice Grade Loop - Service Level 1- Zone 3		3	UEANL	UEASL	34.34	37.81	17.56	23.49	5.30						
	Unbundled Miscellaneous Rate Element, Tag Loop at End User Premise			UEANL	URETL		8.33	0.83								
	Loop Testing - Basic 1st Half Hour			UEANL	URET1		34.16	34.16								
	Loop Testing - Basic Additional Half Hour			UEANL	URETA		19.85	19.85								
	CLEC to CLEC Conversion Charge Without Outside Dispatch (UVL-SL1)			UEANL	UREWO		15.78	8.94								

CATEGORY	RATE ELEMENTS	Interim	Zone	BCS	USOC	RATES ($)					Svc Order Submitted Elec per LSR	Svc Order Submitted Manually per LSR	Incremental Charge - Manual Svc Order vs. Electronic-1st	Incremental Charge - Manual Svc Order vs. Electronic-Add'l	Incremental Charge - Manual Svc Order vs. Electronic-Disc 1st	Incremental Charge - Manual Svc Order vs. Electronic-Disc Add'l
						Rec	Nonrecurring		Nonrecurring Disconnect		OSS Rates ($)					
							First	Add'l	First	Add'l	SOMEC	SOMAN	SOMAN	SOMAN	SOMAN	SOMAN
	Unbundled Voice Loop, Non-Design Voice Loop, billing for BST providing make-up (Engineering Information - E.I.)			UEANL	UEANM		13.44									
	Manual Order Coordination for UVL-SL1s (per loop)			UEANL	UEAMC		8.15	8.15								
	Order Coordination for Specified Conversion Time for UVL-SL1 (per LSR)			UEANL	OCOSL		18.09									
2-WIRE Unbundled COPPER LOOP																
	2-Wire Unbundled Copper Loop - Non-Designed Zone 1		1	UEQ	UEQ2X	11.20	34.14	15.10	21.25	4.15						
	2 Wire Unbundled Copper Loop - Non-Designed - Zone 2		2	UEQ	UEQ2X	13.27	34.14	15.10	21.25	4.15						
	2 Wire Unbundled Copper Loop - Non-Designed - Zone 3		3	UEQ	UEQ2X	15.07	34.14	15.10	21.25	4.15						
	Unbundled Miscellaneous Rate Element, Tag Loop at End User Premise			UEQ	URETL		8.33	0.83								
	Manual Order Coordination 2 Wire Unbundled Copper Loop - Non-Designed (per loop)			UEQ	USBMC		8.15									
	Unbundled Copper Loop, Non-Design Copper Loop, billing for BST providing make-up (Engineering Information - E.I.)			UEQ	UEQMU		13.44									
	Loop Testing - Basic 1st Half Hour			UEQ	URET1		34.16	34.16								
	Loop Testing - Basic Additional Half Hour			UEQ	URETA		19.85	19.85								
	CLEC to CLEC Conversion Charge Without Outside Dispatch (UCL-ND)			UEQ	UREWO		14.27	7.43								
UNBUNDLED EXCHANGE ACCESS LOOP																
2-WIRE ANALOG VOICE GRADE LOOP																
	2 Wire Analog Voice Grade Loop-Service Level 1-Line Splitting-Zone 1		1	UEPSR UEPSB	UEALS	12.58	37.81	17.56	23.49	5.30						
	2 Wire Analog Voice Grade Loop-Service Level 1-Line Splitting-Zone 1		1	UEPSR UEPSB	UEABS	12.58	37.81	17.56	23.49	5.30						
	2 Wire Analog Voice Grade Loop- Service Level 1-Line Splitting-Zone 2		2	UEPSR UEPSB	UEALS	21.05	37.81	17.56	23.49	5.30						
	2 Wire Analog Voice Grade Loop- Service Level 1-Line Splitting-Zone 2		2	UEPSR UEPSB	UEABS	21.05	37.81	17.56	23.49	5.30						
	2 Wire Analog Voice Grade Loop-Service Level 1-Line Splitting-Zone 3		3	UEPSR UEPSB	UEALS	34.34	37.81	17.56	23.49	5.30						
	2 Wire Analog Voice Grade Loop-Service Level 1-Line Splitting-Zone 3		3	UEPSR UEPSB	UEABS	34.34	37.81	17.56	23.49	5.30						
UNBUNDLED EXCHANGE ACCESS LOOP																
2-WIRE ANALOG VOICE GRADE LOOP																
	2-Wire Analog Voice Grade Loop - Service Level 2 w/Loop or Ground Start Signaling - Zone 1		1	UEA	UEAL2	14.38	88.00	55.00	47.24	7.44						
	2-Wire Analog Voice Grade Loop - Service Level 2 w/Loop or Ground Start Signaling - Zone 2		2	UEA	UEAL2	22.85	88.00	55.00	47.24	7.44						
	2-Wire Analog Voice Grade Loop - Service Level 2 w/Loop or Ground Start Signaling - Zone 3		3	UEA	UEAL2	36.14	88.00	55.00	47.24	7.44						
	Order Coordination for Specified Conversion Time (per LSR)			UEA	OCOSL		18.09									
	2-Wire Analog Voice Grade Loop - Service Level 2 w/Reverse Battery Signaling - Zone 1		1	UEA	UEAR2	14.38	88.00	55.00	47.24	7.44						
	2-Wire Analog Voice Grade Loop - Service Level 2 w/Reverse Battery Signaling - Zone 2		2	UEA	UEAR2	22.85	88.00	55.00	47.24	7.44						
	2-Wire Analog Voice Grade Loop - Service Level 2 w/Reverse Battery Signaling - Zone 3		3	UEA	UEAR2	36.14	88.00	55.00	47.24	7.44						
	Order Coordination for Specified Conversion Time (per LSR)			UEA	OCOSL		18.09									
	CLEC to CLEC Conversion Charge without outside dispatch			UEA	UREWO		87.72	36.36								
	Loop Tagging - Service Level 2 (SL2)			UEA	URETL		11.21	1.10								
4-WIRE ANALOG VOICE GRADE LOOP																
	4-Wire Analog Voice Grade Loop - Zone 1		1	UEA	UEAL4	25.34	131.97	94.51	59.14	14.50						
	4-Wire Analog Voice Grade Loop - Zone 2		2	UEA	UEAL4	38.58	131.97	94.51	59.14	14.50						
	4-Wire Analog Voice Grade Loop - Zone 3		3	UEA	UEAL4	60.02	131.97	94.51	59.14	14.50						
	Order Coordination for Specified Conversion Time (per LSR)			UEA	OCOSL		18.09									
	CLEC to CLEC Conversion Charge without outside dispatch			UEA	UREWO		87.72	36.36								
2-WIRE ISDN DIGITAL GRADE LOOP																
	2-Wire ISDN Digital Grade Loop - Zone 1		1	UDN	U1L2X	21.88	117.24	79.77	52.88	10.54						
	2-Wire ISDN Digital Grade Loop - Zone 2		2	UDN	U1L2X	32.85	117.24	79.77	52.88	10.54						
	2-Wire ISDN Digital Grade Loop - Zone 3		3	UDN	U1L2X	48.55	117.24	79.77	52.88	10.54						
	Order Coordination For Specified Conversion Time (per LSR)			UDN	OCOSL		18.09									
	CLEC to CLEC Conversion Charge without outside dispatch			UDN	UREWO		91.63	44.16								
2-WIRE ASYMMETRICAL DIGITAL SUBSCRIBER LINE (ADSL) COMPATIBLE LOOP																

UNBUNDLED NETWORK ELEMENTS - Alabama

Attachment: 2 Ex. A

CATEGORY	RATE ELEMENTS	Interim	Zone	BCS	USOC	RATES ($)					Svc Order Submitted Elec per LSR	Svc Order Submitted Manually per LSR	Incremental Charge - Manual Svc Order vs. Electronic-1st	Incremental Charge - Manual Svc Order vs. Electronic-Add'l	Incremental Charge - Manual Svc Order vs. Electronic-Disc 1st	Incremental Charge - Manual Svc Order vs. Electronic-Disc Add'l
						Rec	Nonrecurring		Nonrecurring Disconnect		OSS Rates ($)					
							First	Add'l	First	Add'l	SOMEC	SOMAN	SOMAN	SOMAN	SOMAN	SOMAN
	2 Wire Unbundled ADSL Loop including manual service inquiry & facility reservation - Zone 1		1	UAL	UAL2X	11.01	110.00	68.00	47.24	7.44						
	2 Wire Unbundled ADSL Loop including manual service inquiry & facility reservation - Zone 2		2	UAL	UAL2X	12.73	110.00	68.00	47.24	7.44						
	2 Wire Unbundled ADSL Loop including manual service inquiry & facility reservation - Zone 3		3	UAL	UAL2X	14.30	110.00	68.00	47.24	7.44						
	Order Coordination for Specified Conversion Time (per LSR)			UAL	OCOSL		18.09									
	2 Wire Unbundled ADSL Loop without manual service inquiry & facility reservaton - Zone 1		1	UAL	UAL2W	11.01	90.00	57.00	47.24	7.44						
	2 Wire Unbundled ADSL Loop without manual service inquiry & facility reservaton - Zone 2		2	UAL	UAL2W	12.73	90.00	57.00	47.24	7.44						
	2 Wire Unbundled ADSL Loop without manual service inquiry & facility reservaton - Zone 3		3	UAL	UAL2W	14.30	90.00	57.00	47.24	7.44						
	Order Coordination for Specified Conversion Time (per LSR)			UAL	OCOSL		18.09									
	CLEC to CLEC Conversion Charge without outside dispatch			UAL	UREWO		86.20	40.40								
2-WIRE HIGH BIT RATE DIGITAL SUBSCRIBER LINE (HDSL) COMPATIBLE LOOP																
	2 Wire Unbundled HDSL Loop including manual service inquiry & facility reservation - Zone 1		1	UHL	UHL2X	8.74	110.00	68.00	47.24	7.44						
	2 Wire Unbundled HDSL Loop including manual service inquiry & facility reservation - Zone 2		2	UHL	UHL2X	10.17	110.00	68.00	47.24	7.44						
	2 Wire Unbundled HDSL Loop including manual service inquiry & facility reservation - Zone 3		3	UHL	UHL2X	11.44	110.00	68.00	47.24	7.44						
	Order Coordination for Specified Conversion Time (per LSR)			UHL	OCOSL		18.09									
	2 Wire Unbundled HDSL Loop without manual service inquiry and facility reservation - Zone 1		1	UHL	UHL2W	8.74	90.00	57.00	47.24	7.44						
	2 Wire Unbundled HDSL Loop without manual service inquiry and facility reservation - Zone 2		2	UHL	UHL2W	10.17	90.00	57.00	47.24	7.44						
	2 Wire Unbundled HDSL Loop without manual service inquiry and facility reservation - Zone 3		3	UHL	UHL2W	11.44	90.00	57.00	47.24	7.44						
	Order Coordination for Specified Conversion Time (per LSR)			UHL	OCOSL		18.09									
	CLEC to CLEC Conversion Charge without outside dispatch			UHL	UREWO		86.14	40.40								
4-WIRE HIGH BIT RATE DIGITAL SUBSCRIBER LINE (HDSL) COMPATIBLE LOOP																
	4 Wire Unbundled HDSL Loop including manual service inquiry and facility reservation - Zone 1		1	UHL	UHL4X	13.95	148.36	68.00	51.70	9.73						
	4-Wire Unbundled HDSL Loop including manual service inquiry and facility reservation - Zone 2		2	UHL	UHL4X	15.56	148.36	68.00	51.70	9.73						
	4-Wire Unbundled HDSL Loop including manual service inquiry and facility reservation - Zone 3		3	UHL	UHL4X	15.25	148.36	68.00	51.70	9.73						
	Order Coordination for Specified Conversion Time (per LSR)			UHL	OCOSL		18.09									
	4-Wire Unbundled HDSL Loop without manual service inquiry and facility reservation - Zone 1		1	UHL	UHL4W	13.95	94.00	57.00	51.70	9.73						
	4-Wire Unbundled HDSL Loop without manual service inquiry and facility reservation - Zone 2		2	UHL	UHL4W	15.56	94.00	57.00	51.70	9.73						
	4-Wire Unbundled HDSL Loop without manual service inquiry and facility reservation - Zone 3		3	UHL	UHL4W	15.25	94.00	57.00	51.70	9.73						
	Order Coordination for Specified Conversion Time (per LSR)			UHL	OCOSL		18.09									
	CLEC to CLEC Conversion Charge without outside dispatch			UHL	UREWO		86.14	40.40								
4-WIRE DS1 DIGITAL LOOP																
	4-Wire DS1 Digital Loop - Zone 1		1	USL	USLXX	82.55	252.47	157.54	44.70	11.71						
	4-Wire DS1 Digital Loop - Zone 2		2	USL	USLXX	154.18	252.47	157.54	44.70	11.71						
	4-Wire DS1 Digital Loop - Zone 3		3	USL	USLXX	314.52	252.47	157.54	44.70	11.71						
	Order Coordination for Specified Conversion Time (per LSR)			USL	OCOSL		18.09									
	CLEC to CLEC Conversion Charge without outside dispatch			USL	UREWO		101.09	43.05								
4-WIRE 19.2, 56 OR 64 KBPS DIGITAL GRADE LOOP																
	4 Wire Unbundled Digital 19.2 Kbps		1	UDL	UDL19	26.09	126.27	88.80	59.14	14.50						
	4 Wire Unbundled Digital 19.2 Kbps		2	UDL	UDL19	35.95	126.27	88.80	59.14	14.50						
	4 Wire Unbundled Digital 19.2 Kbps		3	UDL	UDL19	37.88	126.27	88.80	59.14	14.50						
	4 Wire Unbundled Digital Loop 56 Kbps - Zone 1		1	UDL	UDL56	26.09	126.27	88.80	59.14	14.50						
	4 Wire Unbundled Digital Loop 56 Kbps - Zone 2		2	UDL	UDL56	35.95	126.27	88.80	59.14	14.50						
	4 Wire Unbundled Digital Loop 56 Kbps - Zone 3		3	UDL	UDL56	37.88	126.27	88.80	59.14	14.50						
	Order Coordination for Specified Conversion Time (per LSR)			UDL	OCOSL		18.09									
	4 Wire Unbundled Digital Loop 64 Kbps - Zone 1		1	UDL	UDL64	26.09	126.27	88.80	59.14	14.50						
	4 Wire Unbundled Digital Loop 64 Kbps - Zone 2		2	UDL	UDL64	35.95	126.27	88.80	59.14	14.50						
	4 Wire Unbundled Digital Loop 64 Kbps - Zone 3		3	UDL	UDL64	37.88	126.27	88.80	59.14	14.50						

UNBUNDLED NETWORK ELEMENTS - Alabama

Attachment: 2 Ex. A

CATEGORY	RATE ELEMENTS	Interim	Zone	BCS	USOC	RATES ($)					Svc Order Submitted Elec per LSR	Svc Order Submitted Manually per LSR	Incremental Charge - Manual Svc Order vs. Electronic-1st	Incremental Charge - Manual Svc Order vs. Electronic-Add'l	Incremental Charge - Manual Svc Order vs. Electronic-Disc 1st	Incremental Charge - Manual Svc Order vs. Electronic-Disc Add'l
						Rec	Nonrecurring		Nonrecurring Disconnect		OSS Rates ($)					
							First	Add'l	First	Add'l	SOMEC	SOMAN	SOMAN	SOMAN	SOMAN	SOMAN
	Order Coordination for Specified Conversion Time (per LSR)			UDL	OCOSL		18.09									
	CLEC to CLEC Conversion Charge without outside dispatch			UDL	UREWO		102.13	49.75								
2-WIRE Unbundled COPPER LOOP																
	2-Wire Unbundled Copper Loop-Designed including manual service inquiry & facility reservation - Zone 1		1	UCL	UCLPB	11.01	112.46	65.30	47.24	7.44						
	2-Wire Unbundled Copper Loop-Designed including manual service inquiry & facility reservation - Zone 2		2	UCL	UCLPB	12.73	112.46	65.30	47.24	7.44						
	2 Wire Unbundled Copper Loop-Designed including manual service inquiry & facility reservation - Zone 3		3	UCL	UCLPB	14.30	112.46	65.30	47.24	7.44						
	Order Coordination for Unbundled Copper Loops (per loop)			UCL	UCLMC		8.15	8.15								
	2-Wire Unbundled Copper Loop-Designed without manual service inquiry and facility reservation - Zone 1	I	1	UCL	UCLPW	11.01	91.46	54.30	47.24	7.44						
	2-Wire Unbundled Copper Loop-Designed without manual service inquiry and facility reservation - Zone 2	I	2	UCL	UCLPW	12.73	91.46	54.30	47.24	7.44						
	2-Wire Unbundled Copper Loop-Designed without manual service inquiry and facility reservation - Zone 3	I	3	UCL	UCLPW	14.30	91.46	54.30	47.24	7.44						
	Order Coordination for Unbundled Copper Loops (per loop)			UCL	UCLMC		8.15	8.15								
	CLEC to CLEC Conversion Charge without outside dispatch (UCL Des)			UCL	UREWO		97.23	42.48								
4-WIRE COPPER LOOP																
	4-Wire Copper Loop-Designed including manual service inquiry and facility reservation - Zone 1		1	UCL	UCL4S	17.36	135.21	88.05	51.70	9.73						
	4-Wire Copper Loop-Designed including manual service inquiry and facility reservation - Zone 2		2	UCL	UCL4S	20.76	135.21	88.05	51.70	9.73						
	4-Wire Copper Loop-Designed including manual service inquiry and facility reservation - Zone 3		3	UCL	UCL4S	28.21	135.21	88.05	51.70	9.73						
	Order Coordination for Unbundled Copper Loops (per loop)			UCL	UCLMC		8.15	8.15								
	4-Wire Copper Loop-Designed without manual service inquiry and facility reservation - Zone 1	I	1	UCL	UCL4W	17.36	114.21	67.05	51.70	9.73						
	4-Wire Copper Loop-Designed without manual service inquiry and facility reservation - Zone 2	I	2	UCL	UCL4W	20.76	114.21	67.05	51.70	9.73						
	4-Wire Copper Loop-Designed without manual service inquiry and facility reservation - Zone 3	I	3	UCL	UCL4W	28.21	114.21	67.05	51.70	9.73						
	Order Coordination for Unbundled Copper Loops (per loop)			UCL	UCLMC		8.15	8.15								
	CLEC to CLEC conversion Charge without outside dispatch			UCL	UREWO		97.23	42.48								
LOOP MODIFICATION																
	Unbundled Loop Modification, Removal of Load Coils - 2 Wire pair less than or equal to 18k ft. per Unbundled Loop	I		UAL, UHL, UCL, UEQ, ULS, UEA, UEANL, UEPSR, UEPSB	ULM2L		0.00	0.00								
	Unbundled Loop Modification Removal of Load Coils - 4 Wire less than or equal to 18K ft, per Unbundled Loop	I		UHL, UCL, UEA	ULM4L		0.00	0.00								
	Unbundled Loop Modification Removal of Bridged Tap Removal, per unbundled loop	I		UAL, UHL, UCL, UEQ,ULS,UEA, UEANL, UEPSR, UEPSB	ULMBT		32.41	32.41								
SUB-LOOPS																
Sub-Loop Distribution																
	Sub-Loop - Per Cross Box Location - CLEC Feeder Facility Set-Up	I		UEANL	USBSA		244.42									
	Sub-Loop - Per Cross Box Location - Per 25 Pair Panel Set-Up	I		UEANL	USBSB		22.64									
	Sub-Loop - Per Building Equipment Room - CLEC Feeder Facility Set-Up	I		UEANL	USBSC		177.45									
	Sub-Loop - Per Building Equipment Room - Per 25 Pair Panel Set-Up	I		UEANL	USBSD		55.15									
	Sub-Loop Distribution Per 2-Wire Analog Voice Grade Loop - Zone 1		1	UEANL	USBN2	11.21	65.80	30.96	45.25	6.70						
	Sub-Loop Distribution Per 2-Wire Analog Voice Grade Loop - Zone 2		2	UEANL	USBN2	11.94	65.80	30.96	45.25	6.70						
	Sub-Loop Distribution Per 2-Wire Analog Voice Grade Loop - Zone 3		3	UEANL	USBN2	16.86	65.80	30.96	45.25	6.70						
	Order Coordination for Unbundled Sub-Loops, per sub-loop pair			UEANL	USBMC		8.15	8.15								

UNBUNDLED NETWORK ELEMENTS - Alabama

Attachment: 2 Ex. A

CATEGORY	RATE ELEMENTS	Interim	Zone	BCS	USOC	RATES ($)					Svc Order Submitted Elec per LSR	Svc Order Submitted Manually per LSR	Incremental Charge - Manual Svc Order vs. Electronic-1st	Incremental Charge - Manual Svc Order vs. Electronic-Add'l	Incremental Charge - Manual Svc Order vs. Electronic-Disc 1st	Incremental Charge - Manual Svc Order vs. Electronic-Disc Add'l
						Rec	Nonrecurring		Nonrecurring Disconnect		OSS Rates ($)					
							First	Add'l	First	Add'l	SOMEC	SOMAN	SOMAN	SOMAN	SOMAN	SOMAN
	Sub-Loop Distribution Per 4-Wire Analog Voice Grade Loop - Zone 1		1	UEANL	USBN4	8.46	79.03	44.19	49.71	9.07						
	Sub-Loop Distribution Per 4-Wire Analog Voice Grade Loop - Zone 2		2	UEANL	USBN4	16.67	79.03	44.19	49.71	9.07						
	Sub-Loop Distribution Per 4-Wire Analog Voice Grade Loop - Zone 3		3	UEANL	USBN4	32.57	79.03	44.19	49.71	9.07						
	Order Coordination for Unbundled Sub-Loops, per sub-loop pair			UEANL	USBMC		8.15	8.15								
	Sub-Loop 2-Wire Intrabuilding Network Cable (INC)	I		UEANL	USBR2	2.27	53.01	18.17	45.25	6.70						
	Order Coordination for Unbundled Sub-Loops, per sub-loop pair			UEANL	USBMC		8.15	8.15								
	Sub-Loop 4-Wire Intrabuilding Network Cable (INC)	I		UEANL	USBR4	5.16	59.25	24.41	49.71	9.07						
	Order Coordination for Unbundled Sub-Loops, per sub-loop pair			UEANL	USBMC		8.15	8.15								
	Loop Testing - Basic 1st Half Hour			UEANL	URET1		34.16	34.16								
	Loop Testing - Basic Additional Half Hour			UEANL	URETA		19.85	19.85								
	2 Wire Copper Unbundled Sub-Loop Distribution - Zone 1		1	UEF	UCS2X	6.22	65.80	30.96	45.25	6.70						
	2 Wire Copper Unbundled Sub-Loop Distribution - Zone 2		2	UEF	UCS2X	8.76	65.80	30.96	45.25	6.70						
	2 Wire Copper Unbundled Sub-Loop Distribution - Zone 3		3	UEF	UCS2X	11.27	65.80	30.96	45.25	6.70						
	Order Coordination for Unbundled Sub-Loops, per sub-loop pair			UEF	USBMC		8.15	8.15								
	4 Wire Copper Unbundled Sub-Loop Distribution - Zone 1		1	UEF	UCS4X	6.11	79.03	44.19	49.71	9.07						
	4 Wire Copper Unbundled Sub-Loop Distribution - Zone 2		2	UEF	UCS4X	12.61	79.03	44.19	49.71	9.07						
	4 Wire Copper Unbundled Sub-Loop Distribution - Zone 3		3	UEF	UCS4X	15.36	79.03	44.19	49.71	9.07						
	Order Coordination for Unbundled Sub-Loops, per sub-loop pair			UEF	USBMC		8.15	8.15								
	Loop Testing - Basic 1st Half Hour			UEF	URET1		34.16	34.16								
	Loop Testing - Basic Additional Half Hour			UEF	URETA		19.85	19.85								
	Unbundled Network Terminating Wire (UNTW)															
	Unbundled Network Terminating Wire (UNTW) per Pair			UENTW	UENPP	0.40	30.01									
	Network Interface Device (NID)															
	Network Interface Device (NID) - 1-2 lines			UENTW	UND12		43.23	28.38								
	Network Interface Device (NID) - 1-6 lines			UENTW	UND16		63.97	49.11								
	Network Interface Device Cross Connect - 2 W			UENTW	UNDC2		5.87	5.87								
	Network Interface Device Cross Connect - 4W			UENTW	UNDC4		5.87	5.87								
UNE OTHER, PROVISIONING ONLY - NO RATE																
	NID - Dispatch and Service Order for NID installation			UENTW	UNDBX	0.00	0.00									
	UNTW Circuit Id Establishment, Provisioning Only - No Rate			UENTW	UENCE	0.00	0.00									
	Unbundled Contract Name, Provisioning Only - No Rate			UEANL,UEF,UEQ,UENTW	UNECN	0.00	0.00									
UNE OTHER, PROVISIONING ONLY - NO RATE																
	Unbundled Contact Name, Provisioning Only - no rate			UAL,UCL,UDC,UDL, UDN,UEA,UHL, USL	UNECN	0.00	0.00									
	Unbundled Sub-Loop Feeder-2 Wire Cross Box Jumper - no rate			UEA,UDN,UCL,UDC	USBFQ	0.00	0.00									
	Unbundled Sub-Loop Feeder-4 Wire Cross Box Jumper - no rate			UEA,USL,UCL,UDL	USBFR	0.00	0.00									
	Unbundled DS1 Loop - Superframe Format Option - no rate			USL	CCOSF	0.00	0.00									
	Unbundled DS1 Loop - Expanded Superframe Format option - no rate			USL	CCOEF	0.00	0.00									
HIGH CAPACITY UNBUNDLED LOCAL LOOP																
	High Capacity Unbundled Local Loop - DS3 - Per Mile per month			UE3	1L5ND	8.38										
	High Capacity Unbundled Local Loop - DS3 - Facility Termination per month			UE3	UE3PX	308.98	519.248	303.531	137.4135	96.117						
	High Capacity Unbundled Local Loop - STS-1 - Per Mile per month			UDLSX	1L5ND	8.38										
	High Capacity Unbundled Local Loop - STS-1 - Facility Termination per month			UDLSX	UDLS1	319.83	519.248	303.531	137.4135	96.117						
LOOP MAKE-UP																
	Loop Makeup - Preordering Without Reservation, per working or spare facility queried (Manual).			UMK	UMKLW		20.00	20.00								

CATEGORY		RATE ELEMENTS	Interim	Zone	BCS	USOC	RATES ($)					Svc Order Submitted Elec per LSR	Svc Order Submitted Manually per LSR	Incremental Charge - Manual Svc Order vs. Electronic-1st	Incremental Charge - Manual Svc Order vs. Electronic-Add'l	Incremental Charge - Manual Svc Order vs. Electronic-Disc 1st	Incremental Charge - Manual Svc Order vs. Electronic-Disc Add'l
							Rec	Nonrecurring		Nonrecurring Disconnect		OSS Rates ($)					
								First	Add'l	First	Add'l	SOMEC	SOMAN	SOMAN	SOMAN	SOMAN	SOMAN
		Loop Makeup - Preordering With Reservation, per spare facility queried (Manual).			UMK	UMKLP		21.00	21.00								
		Loop Makeup--With or Without Reservation, per working or spare facility queried (Mechanized)			UMK	UMKMQ		0.59	0.59								
LINE SPLITTING																	
	LINE SPLITTING																
	END USER ORDERING-CENTRAL OFFICE BASED																
		Line Splitting - per line activation DLEC owned splitter			UEPSR UEPSB	UREOS	0.61										
		Line Splitting - per line activation BST owned - physical			UEPSR UEPSB	UREBP	0.61	37.01	21.19	20.02	9.83						
		Line Splitting - per line activation BST owned - virtual			UEPSR UEPSB	UREBV	0.61	37.01	21.19	20.02	9.83						
MAINTENANCE OF SERVICE																	
	NOTE: The Expedite charge will be maintained commensurate with BellSouth's FCC No.1 Tariff, Section 13.3.1 as applicable.																
		No Trouble Found - per 1/2 hour increments - Basic						80.00	55.00								
		No Trouble Found - per 1/2 hour increments - Overtime						90.00	65.00								
		No Trouble Found - per 1/2 hour increments - Premium						100.00	75.00								
UNBUNDLED DEDICATED TRANSPORT																	
	INTEROFFICE CHANNEL - DEDICATED TRANSPORT																
		Interoffice Channel - Dedicated Transport - 2-Wire Voice Grade - Per Mile per month			U1TVX	1L5XX	0.008838										
		Interoffice Channel - Dedicated Transport- 2- Wire Voice Grade - Facility Termination			U1TVX	U1TV2	21.13	40.54	27.41	16.74	6.90						
		Interoffice Channel - Dedicated Transpor t- 2-Wire Voice Grade Rev Bat. - Per Mile per month			U1TVX	1L5XX	0.008838										
		Interoffice Channel - Dedicated Transport- 2- Wire VG Rev Bat. - Facility Termination			U1TVX	U1TR2	21.13	40.54	27.41	16.74	6.90						
		Interoffice Channel - Dedicated Transport - 4-Wire Voice Grade - Per Mile per month			U1TVX	1L5XX	0.008838										
		Interoffice Channel - Dedicated Transport - 4- Wire Voice Grade - Facility Termination			U1TVX	U1TV4	18.73	40.54	27.41	16.74	6.90						
		Interoffice Channel - Dedicated Transport - 56 kbps - per mile per month			U1TDX	1L5XX	0.008838										
		Interoffice Channel - Dedicated Transport - 56 kbps - Facility Termination			U1TDX	U1TD5	15.12	40.54	27.41	16.74	6.90						
		Interoffice Channel - Dedicated Transport - 64 kbps - per mile per month			U1TDX	1L5XX	0.008838										
		Interoffice Channel - Dedicated Transport - 64 kbps - Facility Termination			U1TDX	U1TD6	15.12	40.54	27.41	16.74	6.90						
		Interoffice Channel - Dedicated Channel - DS1 - Per Mile per month			U1TD1	1L5XX	0.18										
		Interoffice Channel - Dedicated Tranport - DS1 - Facility Termination			U1TD1	U1TF1	60.16	89.27	81.81	16.35	14.44						
		Interoffice Channel - Dedicated Transport - DS3 - Per Mile per month			U1TD3	1L5XX	4.09										
		Interoffice Channel - Dedicated Transport - DS3 - Facility Termination per month			U1TD3	U1TF3	703.52	278.75	162.76	60.20	28.46						
		Interoffice Channel - Dedicated Transport - STS-1 - Per Mile per month			U1TS1	1L5XX	4.09										
		Interoffice Channel - Dedicated Transport - STS-1 - Facility Termination			U1TS1	U1TFS	701.37	278.75	162.76	60.20	28.46						
DARK FIBER																	
		Dark Fiber, Four Fiber Strands, Per Route Mile or Fraction Thereof per month - Local Channel			UDF, UDFCX	1L5DC	69.37										
		Dark Fiber, Four Fiber Strands, Per Route Mile or Fraction Thereof per month - Interoffice Channel			UDF, UDFCX	1L5DF	23.29										
		NRC Dark Fiber - Interoffice Channel			UDF, UDFCX	UDF14		639.09	137.87	317.06	197.66						
		Dark Fiber, Four Fiber Strands, Per Route Mile or Fraction Thereof per month - Local Loop			UDF, UDFCX	1L5DL	69.37										
8XX ACCESS TEN DIGIT SCREENING																	
		8XX Access Ten Digit Screening, Per Call					0.000565										
		8XX Access Ten Digit Screening, w/ 8FL No. Delivery					0.000565										
		8XX Access Ten Digit Screening, w/ POTS No. Delivery					0.000565										
LINE INFORMATION DATA BASE ACCESS (LIDB)																	
		LIDB Common Transport Per Query					0.00002										
		LIDB Validation Per Query					0.012002										

UNBUNDLED NETWORK ELEMENTS - Alabama

Attachment: 2 Ex. A

CATEGORY	RATE ELEMENTS	Interim	Zone	BCS	USOC	RATES ($) Rec	Nonrecurring First	Nonrecurring Add'l	Nonrecurring Disconnect First	Nonrecurring Disconnect Add'l	Svc Order Submitted Elec per LSR	Svc Order Submitted Manually per LSR	Incremental Charge - Manual Svc Order vs. Electronic-1st	Incremental Charge - Manual Svc Order vs. Electronic-Add'l	Incremental Charge - Manual Svc Order vs. Electronic-Disc 1st	Incremental Charge - Manual Svc Order vs. Electronic-Disc Add'l
											OSS Rates ($)					
							First	Add'l	First	Add'l	SOMEC	SOMAN	SOMAN	SOMAN	SOMAN	SOMAN
	LIDB Originating Point Code Establishment or Change			OQU	NRBPX		34.32		42.08							
CALLING NAME (CNAM) SERVICE																
	CNAM for DB Owners, Per Query					0.000902										
	CNAM for Non DB Owners, Per Query					0.000902										
LNP Query Service																
	LNP Charge Per query					0.000757										
	LNP Service Establishment Manual						12.52		11.51							
	LNP Service Provisioning with Point Code Establishment						593.49	303.20	268.93	197.74						
SELECTIVE ROUTING																
	Selective Routing Per Unique Line Class Code Per Request Per Switch						84.70	84.70	14.11	14.11						
VIRTUAL COLLOCATION																
	Virtual Collocation-2 Wire Cross Connects (Loop) for Line Splitting			UEPSR UEPSB	VE1LS	0.03	12.30	11.80	6.03	5.44						
PHYSICAL COLLOCATION																
	Physical Collocation-2 Wire Cross Connects (Loop) for Line Splitting			UEPSR UEPSB	PE1LS	0.03	12.30	11.80	6.03	5.44						
AIN SELECTIVE CARRIER ROUTING																
	Regional Service Establishment						101,098.91		8,590.70							
	End Office Establishment						169.88	169.88	1.70	1.70						
	Query NRC, per query					0.002749										
AIN - BELLSOUTH AIN SMS ACCESS SERVICE																
	AIN SMS Access Service - Service Establishment, Per State, Initial Setup			A1N	CAMSE		39.44	39.44	40.69	40.69						
	AIN SMS Access Service - Port Connection - Dial/Shared Access			A1N	CAMDP		7.83	7.83	9.09	9.09						
	AIN SMS Access Service - Port Connection - ISDN Access			A1N	CAM1P		7.83	7.83	9.09	9.09						
	AIN SMS Access Service - User Identification Codes - Per User ID Code			A1N	CAMAU		35.00	35.00	27.06	27.06						
	AIN SMS Access Service - Security Card, Per User ID Code, Initial or Replacement			A1N	CAMRC		41.88	41.88	11.71	11.71						
	AIN SMS Access Service - Storage, Per Unit (100 Kilobytes)					0.002188										
	AIN SMS Access Service - Session, Per Minute					0.59										
	AIN SMS Access Service - Company Performed Session, Per Minute					0.73										
SIGNALING (CCS7)																
	CCS7 Signaling Usage, Per TCAP Message					0.0000569										
	CCS7 Signaling Usage, Per ISUP Message					0.0000142										
911 PBX LOCATE																
	911 PBX LOCATE DATABASE CAPABILITY															
	Service Establishment per CLEC per End User Account			9PBDC	9PBEU		1,813.00									
	Changes to TN Range or Customer Profile			9PBDC	9PBTN		181.44									
	Per Telephone Number (Monthly)			9PBDC	9PBMM	0.07										
	Change Company (Service Provider) ID			9PBDC	9PBPC		532.60									
	PBX Locate Service Support per CLEC (Monthlt)			9PBDC	9PBMR	181.33										
	Service Order Charge			9PBDC	9PBSC		15.66									
	911 PBX LOCATE TRANSPORT COMPONENT															
	See Att 3															
ENHANCED EXTENDED LINK (EELs)																
	NOTE: The monthly recurring and non-recurring charges below will apply and the Switch-As-Is Charge will not apply for UNE combinations provisioned as ' Ordinarily Combined' Network Elements.															
	NOTE: The monthly recurring and the Switch-As-Is Charge and not the non-recurring charges below will apply for UNE combinations provisioned as ' Currently Combined' Network Elements.															
	2-WIRE VOICE GRADE LOOP FOR USE IN A COMBINATION															
	2-Wire VG Loop (SL2) in Combination - Zone 1		1	UNCVX	UEAL2	14.38	88.00	55.00	47.24	7.44						
	2-Wire VG Loop (SL2) in Combination - Zone 2		2	UNCVX	UEAL2	22.85	88.00	55.00	47.24	7.44						
	2-Wire VG Loop (SL2) in Combination - Zone 3		3	UNCVX	UEAL2	36.14	88.00	55.00	47.24	7.44						
	Voice Grade COCI - Per Month			UNCVX	1D1VG	0.53	6.58	4.72								
	4-WIRE VOICE GRADE LOOP FOR USE IN A COMBINATION															
	4-Wire Analog Voice Grade Loop in Combination - Zone 1		1	UNCVX	UEAL4	25.34	131.97	94.51	59.14	14.50						
	4-Wire Analog Voice Grade Loop in Combination - Zone 2		2	UNCVX	UEAL4	38.58	131.97	94.51	59.14	14.50						
	4-Wire Analog Voice Grade Loop in Combination - Zone 3		3	UNCVX	UEAL4	60.02	131.97	94.51	59.14	14.50						
	Voice Grade COCI in combination - per month			UNCVX	1D1VG	0.53	6.58	4.72								
	4-WIRE 56 KBPS DIGITAL LOOP FOR USE IN A COMBINATION															
	4-Wire 56Kbps Digital Grade Loop in Combination - Zone 1		1	UNCDX	UDL56	26.09	126.27	88.80	59.14	14.50						
	4-Wire 56Kbps Digital Grade Loop in Combination - Zone 2		2	UNCDX	UDL56	35.95	126.27	88.80	59.14	14.50						

CATEGORY	RATE ELEMENTS	Interim	Zone	BCS	USOC	RATES ($)					Svc Order Submitted Elec per LSR	Svc Order Submitted Manually per LSR	Incremental Charge - Manual Svc Order vs. Electronic-1st	Incremental Charge - Manual Svc Order vs. Electronic-Add'l	Incremental Charge - Manual Svc Order vs. Electronic-Disc 1st	Incremental Charge - Manual Svc Order vs. Electronic-Disc Add'l
						Rec	Nonrecurring		Nonrecurring Disconnect		OSS Rates ($)					
							First	Add'l	First	Add'l	SOMEC	SOMAN	SOMAN	SOMAN	SOMAN	SOMAN
	4-Wire 56Kbps Digital Grade Loop in Combination - Zone 3		3	UNCDX	UDL56	37.88	126.27	88.80	59.14	14.50						
	OCU-DP COCI (data) per month (2.4-64kbs)			UNCDX	1D1DD	1.12	6.58	4.72								
	4-WIRE 64 KBPS DIGITAL LOOP FOR USE IN A COMBINATIION															
	4-Wire 64Kbps Digital Grade Loop in Combination - Zone 1		1	UNCDX	UDL64	26.09	126.27	88.80	59.14	14.50						
	4-Wire 64Kbps Digital Grade Loop in Combination - Zone 2		2	UNCDX	UDL64	35.95	126.27	88.80	59.14	14.50						
	4-Wire 64Kbps Digital Grade Loop in Combination - Zone 3		3	UNCDX	UDL64	37.88	126.27	88.80	59.14	14.50						
	OCU-DP COCI (data) - in combination - per month (2.4-64kbs)			UNCDX	1D1DD	1.12	6.58	4.72								
	2-WIRE ISDN LOOP FOR USE IN COMBINATION															
	2-Wire ISDN Loop in Combination - Zone 1		1	UNCNX	U1L2X	21.88	117.24	79.77	52.88	10.54						
	2-Wire ISDN Loop in Combination - Zone 2		2	UNCNX	U1L2X	32.85	117.24	79.77	52.88	10.54						
	2-Wire ISDN Loop in Combination - Zone 3		3	UNCNX	U1L2X	48.55	117.24	79.77	52.88	10.54						
	2-wire ISDN COCI (BRITE) - in combination - per month			UNCNX	UC1CA	2.41	6.58	4.72								
	4-WIRE DS1 DIGITAL LOOP FOR USE IN A COMBINATION															
	4-Wire DS1 Digital Loop in Combination - Zone 1		1	UNC1X	USLXX	82.55	252.47	157.54	44.70	11.71						
	4-Wire DS1 Digital Loop in Combination - Zone 2		2	UNC1X	USLXX	154.18	252.47	157.54	44.70	11.71						
	4-Wire DS1 Digital Loop in Combination - Zone 3		3	UNC1X	USLXX	314.52	252.47	157.54	44.70	11.71						
	DS1 COCI in combination per month			UNC1X	UC1D1	12.70	6.58	4.72								
	2 WIRE VOICE GRADE INTEROFFICE TRANSPORT FOR USE IN A COMBINATION															
	Interoffice Transport - 2-wire VG - Dedicated- Per Mile Per Month			UNCVX	1L5XX	0.008838										
	Interoffice Transport - 2-wire VG - Dedicated - Facility Termination per month			UNCVX	U1TV2	21.13	40.54	27.41	16.74	6.90						
	4 WIRE VOICE GRADE INTEROFFICE TRANSPORT FOR USE IN A COMBINATION															
	Interoffice Transport - 4-wire VG - Dedicated - Per Mile Per Month			UNCVX	1L5XX	0.008838										
	Interoffice Transport - 4-wire VG - Dedicated - Facility Termination per month			UNCVX	U1TV4	18.73	40.54	27.41	16.74	6.90						
	DS1 INTEROFFICE TRANSPORT FOR COMBINATION															
	Interoffice Transport - Dedicated - DS1 combination - Per Mile per month			UNC1X	1L5XX	0.18										
	Interoffice Transport - Dedicated - DS1 combination - Facility Termination per month			UNC1X	U1TF1	60.16	89.27	81.81	16.35	14.44						
	DS3 INTEROFFICE TRANSPORT FOR USE IN A COMBINATION															
	Interoffice Transport - Dedicated - DS3 combination - Per Mile Per Month			UNC3X	1L5XX	4.09										
	Interoffice Transport - Dedicated - DS3 - Facility Termination per month			UNC3X	U1TF3	703.52	278.75	162.76	60.20	58.46						
	3/1 Channel System in combination per month			UNC3X	MQ3	166.13	178.14	93.97	33.26	31.83						
	STS-1 INTEROFFICE TRANSPORT FOR USE IN COMBINATION															
	Interoffice Transport - Dedicated - STS-1 combination - Per Mile Per Month			UNCSX	1L5XX	4.09										
	Interoffice Transport - Dedicated - STS-1 combination - Facility Termination per month			UNCSX	U1TFS	701.37	278.75	162.76	60.20	58.46						
	3/1 Channel System in combination per month			UNCSX	MQ3	166.13	178.14	93.97	33.26	31.83						
	4-WIRE 56 KBPS DIGITAL LOOP WITH 56 KBPS INTEROFFICE TRANSPORT															
	4-wire 56 kbps Local Loop in combination - Zone 1		1	UNCDX	UDL56	26.09	126.27	88.80	59.14	14.50						
	4-wire 56 kbps Local Loop in combination - Zone 2		2	UNCDX	UDL56	35.95	126.27	88.80	59.14	14.50						
	4-wire 56 kbps Local Loop in combination - Zone 3		3	UNCDX	UDL56	37.88	126.27	88.80	59.14	14.50						
	Interoffice Transport - Dedicated - 4-wire 56 kbps combination - Per Mile per month			UNCDX	1L5XX	0.008838										
	Interoffice Transport - Dedicated - 4-wire 56 kbps combination - Facility Termination per month			UNCDX	U1TD5	15.12	40.54	27.41	16.74	6.90						
	4-WIRE 64 KBPS DIGITAL EXTENDED LOOP WITH 64 KBPS INTEROFFICE TRANSPORT															
	4-wire 64 kbps Lcoal Loop in Combination - Zone 1		1	UNCDX	UDL64	26.09	126.27	88.80	59.14	14.50						
	4-wire 64 kbps Lcoal Loop in Combination - Zone 2		2	UNCDX	UDL64	35.95	126.27	88.80	59.14	14.50						
	4-wire 64 kbps Lcoal Loop in Combination - Zone 3		3	UNCDX	UDL64	37.88	126.27	88.80	59.14	14.50						
	Interoffice Transport - Dedicated - 4-wire 64 kbps combination - Per Mile per month			UNCDX	1L5XX	0.008838										
	Interoffice Transport - Dedicated - 4-wire 64 kbps combination - Facility Termination per month			UNCDX	U1TD6	15.12	40.54	27.41	16.74	6.90						
	4-WIRE 56 KBPS DIGITAL EXTENDED LOOP WITH DS0 INTEROFFICE TRANSPORT															
	4-wire 56 kbps Local Loop in combination - Zone 1		1	UNCDX	UDL56	26.09	126.27	88.80	59.14	14.50						
	4-wire 56 kbps Local Loop in combination - Zone 2		2	UNCDX	UDL56	35.95	126.27	88.80	59.14	14.50						
	4-wire 56 kbps Local Loop in combination - Zone 3		3	UNCDX	UDL56	37.88	126.27	88.80	59.14	14.50						

UNBUNDLED NETWORK ELEMENTS - Alabama

Attachment: 2 Ex. A

CATEGORY	RATE ELEMENTS	Interim	Zone	BCS	USOC	RATES ($) Rec	Nonrecurring First	Nonrecurring Add'l	Nonrecurring Disconnect First	Nonrecurring Disconnect Add'l	Svc Order Submitted Elec per LSR	Svc Order Submitted Manually per LSR	Incremental Charge - Manual Svc Order vs. Electronic- 1st	Incremental Charge - Manual Svc Order vs. Electronic- Add'l	Incremental Charge - Manual Svc Order vs. Electronic- Disc 1st	Incremental Charge - Manual Svc Order vs. Electronic- Disc Add'l
											OSS Rates ($)					
							First	Add'l	First	Add'l	SOMEC	SOMAN	SOMAN	SOMAN	SOMAN	SOMAN
	4-wiree 56 kbps Interoffice Transport - Dedicated - Per Mile per month			UNCDX	1L5XX	0.008838										
	4-wire 56 kbps Interoffice Transport - Dedicated - Facility Termination per month			UNCDX	U1TD5	15.12	40.54	27.41	16.74	6.90						
4-WIRE 64 KBPS DIGITAL EXTENDED LOOP WITH DS0 INTEROFFICE TRANSPORT																
	4-wire 64 kbps Local Loop in combination - Zone 1		1	UNCDX	UDL64	26.09	126.27	88.80	59.14	14.50						
	4-wire 64 kbps Local Loop in combination - Zone 2		2	UNCDX	UDL64	35.95	126.27	88.80	59.14	14.50						
	4-wire 64 kbps Local Loop in combination - Zone 3		3	UNCDX	UDL64	37.88	126.27	88.80	59.14	14.50						
	I4-wire 65 kbps Interoffice Transport - Dedicated - Per Mile per month			UNCDX	1L5XX	0.008838										
	4-wire 64 kbps Interoffice Transport - Dedicated - Facility Termination per month			UNCDX	U1TD6	15.12	40.54	27.41	16.74	6.90						
DS1 DIGITAL LOOP AND DS1 INTERFOFFICE TRANSPORT																
	4-Wire DS1 Digital Loop in Combination - Zone 1		1	UNC1X	USLXX	82.55	252.47	157.54	44.70	11.71						
	4-Wire DS1 Digital Loop in Combination - Zone 2		2	UNC1X	USLXX	154.18	252.47	157.54	44.70	11.71						
	4-Wire DS1 Digital Loop in Combination - Zone 3		3	UNC1X	USLXX	314.52	252.47	157.54	44.70	11.71						
	Interoffice Transport - Dedicated - DS1 combination - Per Mile per month			UNC1X	1L5XX	0.18										
	Interoffice Transport - Dedicated - DS1 combination - Facility Termination per month			UNC1X	U1TF1	60.16	89.27	81.81	16.35	14.44						
DS3 DIGITAL LOOP WITH DEDICATED DS3 INTEROFFICE TRANSPORT																
	DS3 Local Loop in combination - per mile per month			UNC3X	1L5ND	9.637										
	DS3 Local Loop in combination - Facility Termination per month			UNC3X	UE3PX	355.327	519.248	303.531	137.4135	96.117						
	Interoffice Transport - Dedicated - DS3 - Per Mile per month			UNC3X	1L5XX	4.09										
	Interoffice Transport - Dedicated - DS3 combination - Facility Termination per month			UNC3X	U1TF3	703.52	278.75	162.76	60.20	58.46						
STS-1 DIGITAL LOOP WITH DEDICATED STS-1 INTEROFFICE TRANSPORT																
	STS-1 Local Lolp in combination - per mile per month			UNCSX	1L5ND	9.637										
	STS-1 Local Loop in combination - Facility Termination per month			UNCSX	UDLS1	367.8045	519.248	303.531	137.4135	96.117						
	Interoffice Transport - Dedicated - STS-1 combination - per mile per month			UNCSX	1L5XX	4.09										
	Interoffice Transport - Dedicated - STS-1 combination - Facility Termination per month			UNCSX	U1TFS	701.37	278.75	162.76	60.20	58.46						
ADDITIONAL NETWORK ELEMENTS																
	When used as a part of a currently combined facility, the non-recurrng charges do not apply, but a Switch As Is charge does apply.															
	When used as ordinarily combined network elements in All States, the non-recurring charges apply and the Switch As Is Charge does not.															
	Commingling Authorization			UNCVX, UNCDX, UNC1X, UNC3X, UNCSX, U1TD1, U1TD3, U1TS1, UE3, UDLSX, U1TVX, U1TDX, U1TUB	CMGAU	0.00	0.00	0.00	0.00	0.00						
	Nonrecurring Currently Combined Network Elements "Switch As Is" Charge (One applies to each combination)															
	Nonrecurring Currently Combined Network Elements Switch -As-Is Charge			UNCVX, UNCDX, UNC1X, UNC3X, UNCSX	UNCCC		5.59	5.59	6.98	6.98						
	Optional Features & Functions:															
	Clear Channel Capability Extended Frame Option - per DS1	I		U1TD1, ULDD1,UNC1X	CCOEF		0.00	0.00	0.00	0.00						
	Clear Channel Capability Super FrameOption - per DS1	I		U1TD1, ULDD1,UNC1X	CCOSF		0.00	0.00	0.00	0.00						
	Clear Channel Capability (SF/ESF) Option - Subsequent Activity - per DS1	I		ULDD1, U1TD1, UNC1X, USL	NRCCC		184.85	23.81	1.99	0.7741						
	C-bit Parity Option - Subsequent Activity - per DS3	i		U1TD3, ULDD3, UE3, UNC3X	NRCC3		219.13	7.67	0.7355	0.00						
MULTIPLEXERS																
	DS1 to DS0 Channel System per month			UNC1X	MQ1	101.06	91.04	62.57	10.54	9.79						
	OCU-DP COCI (data) - DS1 to DS0 Channel System - per month (2.4-64kbs) used for a Local Loop			UDL	1D1DD	1.12	6.58	4.72	0.00	0.00						

UNBUNDLED NETWORK ELEMENTS - Alabama

Attachment: 2 Ex. A

CATEGORY	RATE ELEMENTS	Interim	Zone	BCS	USOC	RATES ($)					Svc Order Submitted Elec per LSR	Svc Order Submitted Manually per LSR	Incremental Charge - Manual Svc Order vs. Electronic-1st	Incremental Charge - Manual Svc Order vs. Electronic-Add'l	Incremental Charge - Manual Svc Order vs. Electronic-Disc 1st	Incremental Charge - Manual Svc Order vs. Electronic-Disc Add'l
						Rec	Nonrecurring		Nonrecurring Disconnect		OSS Rates ($)					
							First	Add'l	First	Add'l	SOMEC	SOMAN	SOMAN	SOMAN	SOMAN	SOMAN
	OCU-DP COCI (data) - DS1 to DS0 Channel System - per month (2.4-64kbs) used for connection to a channelized DS1 Local Channel in the same SWC as collocation			U1TUD	1D1DD	1.12	6.58	4.72	0.00	0.00						
	2-wire ISDN COCI (BRITE) - DS1 to DS0 Channel Systsem - per month for a Local Loop			UDN	UC1CA	2.41	6.58	4.72	0.00	0.00						
	2-wire ISDN COCI (BRITE) - DS1 to DS0 Channel Systsem - per month used for connection to a channelized DS1 Local Channel in the same SWC as collocation			U1TUB	UC1CA	2.41	6.58	4.72	0.00	0.00						
	Voice Grade COCI - DS1 to DS0 Channel System - per month used for a Local Loop			UEA	1D1VG	0.53	6.58	4.72	0.00	0.00						
	Voice Grade COCI - DS1 to DS0 Channel System - per month used for connection to a channelized DS1 Local Channel in the same SWC as collocation			U1TUC	1D1VG	0.53	6.58	4.72	0.00	0.00						
	DS3 to DS1 Channel System per month			UNC3X	MQ3	166.13	178.14	93.97	33.26	31.83						
	STS-1 to DS1 Channel System per month			UNCSX	MQ3	166.13	178.14	93.97	33.26	31.83						
	DS1 COCI used with Loop per month			USL	UC1D1	12.70	6.58	4.72	0.00	0.00						
	DS1 COCI (used for connection to a channelized DS1 Local Channel in the same SWC as collocation) per month			U1TUA	UC1D1	12.70	6.58	4.72	0.00	0.00						
	DS1 COCI used with Interoffice Channel per month			U1TD1	UC1D1	12.70	6.58	4.72	0.00	0.00						
	DS3 Interface Unit (DS1 COCI) used with Local Channel per month			ULDD1	UC1D1	12.70	6.58	4.72	0.00	0.00						
UNBUNDLED LOCAL EXCHANGE SWITCHING(PORTS)																
	The Exchange Switching Port Rates Reflected Here Apply to Embedded Base Switching Ports as of March 10, 2005 and Consist of the TELRIC Cost Based Rates Plus $1.00 in Accordance with the TRRO.															
	EXCHANGE PORT RATES															
	NOTE: Although the Port Rate includes all available features in GA, KY, LA & TN, the desired features will need to be ordered using retail USOCs															
	2-WIRE VOICE GRADE LINE PORT RATES (RES)															
	Exchange Ports - 2-Wire Analog Line Port- Res.			UEPSR	UEPRL	2.38	2.38	2.27	1.42	1.33						
	Exchange Ports - 2-Wire Analog Line Port with Caller ID - Res.			UEPSR	UEPRC	2.38	2.38	2.27	1.42	1.33						
	Exchange Ports - 2-Wire Analog Line Port outgoing only - Res.			UEPSR	UEPRO	2.38	2.38	2.27	1.42	1.33						
	Exchange Ports - 2-Wire VG unbundled AL extended local dialing parity Port with Caller ID - Res.			UEPSR	UEPAR	2.38	2.38	2.27	1.42	1.33						
	Exchange Ports - 2-Wire VG unbundled res, low usage line port with Caller ID (LUM)			UEPSR	UEPAP	2.38	2.38	2.27	1.42	1.33						
	Exchange Ports - 2-Wire VG Alabama Residence Dialing Plan without Caller Id			UEPSR	UEPWA	2.38	2.38	2.27	1.42	1.33						
	2-Wire voice unbundled Low Usage Line Port without Caller ID Capability			UEPSR	UEPRT	2.38	2.38	2.27	1.42	1.33						
	Subsequent Activity			UEPSR	USASC	0.00	0.00	0.00								
	FEATURES															
	All Available Vertical Features			UEPSR	UEPVF	1.98	0.00	0.00								
	2-WIRE VOICE GRADE LINE PORT RATES (BUS)															
	Exchange Ports - 2-Wire Analog Line Port without Caller ID - Bus			UEPSB	UEPBL	2.38	2.38	2.27	1.42	1.33						
	Exchange Ports - 2-Wire VG unbundled Line Port with unbundled port with Caller+E484 ID - Bus.			UEPSB	UEPBC	2.38	2.38	2.27	1.42	1.33						
	Exchange Ports - 2-Wire Analog Line Port outgoing only - Bus.			UEPSB	UEPBO	2.38	2.38	2.27	1.42	1.33						
	Exchange Ports - 2-Wire VG unbundled AL extended local dialing parity Port with Caller ID - Bus.			UEPSB	UEPAW	2.38	2.38	2.27	1.42	1.33						
	Exhange Ports - 2-Wire VG unbundled incoming only port with Caller ID - Bus			UEPSB	UEPB1	2.38	2.38	2.27	1.42	1.33						
	Exchange Ports - 2-Wire Voice Alabama Business Dialing Plan without Caller ID			UEPSB	UEPWB	2.38	2.38	2.27	1.42	1.33						
	2-Wire voice unbundled Incoming Only Port without Caller ID Capability			UEPSB	UEPBE	2.38	2.38	2.27	1.42	1.33						
	Subsequent Activity			UEPSB	USASC	0.00	0.00	0.00								
	FEATURES															
	All Available Vertical Features			UEPSB	UEPVF	1.98	0.00	0.00								
	EXCHANGE PORT RATES (DID & PBX)															
	2-Wire VG Unbundled 2-Way PBX Trunk - Res			UEPSE	UEPRD	2.38	31.27	14.85	13.94	0.90						
	2-Wire VG Line Side Unbundled 2-Way PBX Trunk - Bus			UEPSP	UEPPC	2.38	31.27	14.85	13.94	0.90						

UNBUNDLED NETWORK ELEMENTS - Alabama

Attachment: 2 Ex. A

CATEGORY	RATE ELEMENTS	Interim	Zone	BCS	USOC	RATES ($)					Svc Order Submitted Elec per LSR	Svc Order Submitted Manually per LSR	Incremental Charge - Manual Svc Order vs. Electronic-1st	Incremental Charge - Manual Svc Order vs. Electronic-Add'l	Incremental Charge - Manual Svc Order vs. Electronic-Disc 1st	Incremental Charge - Manual Svc Order vs. Electronic-Disc Add'l
						Rec	Nonrecurring		Nonrecurring Disconnect		OSS Rates ($)					
							First	Add'l	First	Add'l	SOMEC	SOMAN	SOMAN	SOMAN	SOMAN	SOMAN
	2-Wire VG Line Side Unbundled Outward PBX Trunk - Bus			UEPSP	UEPPO	2.38	31.27	14.85	13.94	0.90						
	2-Wire VG Line Side Unbundled Incoming PBX Trunk - Bus			UEPSP	UEPP1	2.38	31.27	14.85	13.94	0.90						
	2-Wire Analog Long Distance Terminal PBX Trunk - Bus			UEPSP	UEPLD	2.38	31.27	14.85	13.94	0.90						
	2-Wire Voice Unbundled 2-Way PBX Alabama Calling Port			UEPSP	UEPA2	2.38	31.27	14.85	13.94	0.90						
	2-Wire Voice Unbundled PBX LD Terminal Ports			UEPSP	UEPLD	2.38	31.27	14.85	13.94	0.90						
	2-Wire Vice Unbundled 2-Way PBX Usage Port			UEPSP	UEPXA	2.38	31.27	14.85	13.94	0.90						
	2-Wire Voice Unbundled PBX Toll Terminal Hotel Ports			UEPSP	UEPXB	2.38	31.27	14.85	13.94	0.90						
	2-Wire Voice Unbundled PBX LD DDD Terminals Port			UEPSP	UEPXC	2.38	31.27	14.85	13.94	0.90						
	2-Wire Voice Unbundled PBX LD Terminal Switchboard Port			UEPSP	UEPXD	2.38	31.27	14.85	13.94	0.90						
	2-Wire Voice Unbundled PBX LD Terminal Switchboard IDD Capable Port			UEPSP	UEPXE	2.38	31.27	14.85	13.94	0.90						
	2-Wire Voice Unbundled 2-Way PBX Hotel/Hospital Economy Administrative Calling Port			UEPSP	UEPXL	2.38	31.27	14.85	13.94	0.90						
	2-Wire Voice Unbundled 2-Way PBX Hotel/Hospital Economy Room Calling Port			UEPSP	UEPXM	2.38	31.27	14.85	13.94	0.90						
	2-Wire Voice Unbundled 1-Way Outgoing PBX Hotel/Hospital Discount Room Calling Port			UEPSP	UEPXO	2.38	31.27	14.85	13.94	0.90						
	2-Wire Voice Unbundled 1-Way Outgoing PBX Measured Port			UEPSP	UEPXS	2.38	31.27	14.85	13.94	0.90						
	Subsequent Activity			UEPSP	USASC	0.00	0.00	0.00								
FEATURES																
	All Available Vertical Features			UEPSP UEPSE	UEPVF	1.98	0.00	0.00								
NOTE: Transmission/usage charges associated with POTS circuit switched usage will also apply to circuit switched voice and/or circuit switched data transmission by B-Channels associated with 2-wire ISDN ports.																
NOTE: Access to B Channel or D Channel Packet capabilities will be available only through BFR/New Business Request Process. Rates for the packet capabilities will be determined via the Bona Fide Request/New Business Request Process.																
2-WIRE VOICE GRADE LINE PORT RATES (DID)																
	Exchange Ports - 2-Wire DID Port			UEPEX	UEPP2	9.05	119.31	18.74	59.90	3.76						
2-WIRE VOICE GRADE LINE PORT RATES (ISDN-BRI)																
	Exchange Ports - 2-Wire ISDN Port (See Notes below.)			UEPTX, UEPSX	U1PMA	10.79	72.77	52.99	47.79	10.74						
	All Features Offered			UEPTX, UEPSX	UEPVF	1.98	0.00	0.00								
	Exchange Ports - 2-Wire ISDN Port -- Channel Profiles			UEPTX, UEPSX	U1UMA	0.00	0.00	0.00								
NOTE: Transmission/usage charges associated with POTS circuit switched usage will also apply to circuit switched voice and/or circuit switched data transmission by B-Channels associated with 2-wire ISDN ports.																
NOTE: Access to B Channel or D Channel Packet capabilities will be available only through BFR/New Business Request Process. Rates for the packet capabilities will be determined via the Bona Fide Request/New Business Request Process.																
UNBUNDLED PORT with REMOTE CALL FORWARDING CAPABILITY																
UNBUNDLED REMOTE CALL FORWARDING SERVICE - RESIDENCE																
	Unbundled Remote Call Forwarding Service, Area Calling, Res			UEPVR	UERAC	2.38	2.38	2.27	1.42	1.33						
	Unbundled Remote Call Forwarding Service, Local Calling - Res			UEPVR	UERLC	2.38	2.38	2.27	1.42	1.33						
	Unbundled Remote Call Forwarding Service, InterLATA - Res			UEPVR	UERTE	2.38	2.38	2.27	1.42	1.33						
	Unbundled Remote Call Forwarding Service, IntraLATA - Res			UEPVR	UERTR	2.38	2.38	2.27	1.42	1.33						
Non-Recurring																
	Unbundled Remote Call Forwarding Service - Conversion - Switch-as-is			UEPVR	USAC2		0.10	0.10								
	Unbundled Remote Call Forwarding Service - Conversion with allowed change (PIC and LPIC)			UEPVR	USACC		0.10	0.10								
UNBUNDLED REMOTE CALL FORWARDING - Bus																
	Unbundled Remote Call Forwarding Service, Area Calling - Bus			UEPVB	UERAC	2.38	2.38	2.27	1.42	1.33						
	Unbundled Remote Call Forwarding Service, Local Calling - Bus			UEPVB	UERLC	2.38	2.38	2.27	1.42	1.33						
	Unbundled Remote Call Forwarding Service, InterLATA - Bus			UEPVB	UERTE	2.38	2.38	2.27	1.42	1.33						
	Unbundled Remote Call Forwarding Service, IntraLATA - Bus			UEPVB	UERTR	2.38	2.38	2.27	1.42	1.33						
	Unbundled Remote Call Forwarding Service Expanded and Exception Local Calling			UEPVB	UERVJ	2.38	2.38	2.27	1.42	1.33						
Non-Recurring																
	Unbundled Remote Call Forwarding Service - Conversion - Switch-as-is			UEPVB	USAC2		0.10	0.10								
	Unbundled Remote Call Forwarding Service - Conversion with allowed change (PIC and LPIC)			UEPVB	USACC		0.10	0.10								
UNBUNDLED LOCAL SWITCHING, PORT USAGE																
End Office Switching (Port Usage)																
	End Office Switching Function, Per MOU					0.0007025										
	End Office Trunk Port - Shared, Per MOU					0.0001638										
Tandem Switching (Port Usage) (Local or Access Tandem)																
	Tandem Switching Function Per MOU					0.000095										
	Tandem Trunk Port - Shared, Per MOU					0.0002015										
	Tandem Switching Function Per MOU (Melded)					0.000040993										

UNBUNDLED NETWORK ELEMENTS - Alabama

Attachment: 2 Ex. A

CATEGORY	RATE ELEMENTS	Interim	Zone	BCS	USOC	RATES ($) Rec	Nonrecurring First	Nonrecurring Add'l	Nonrecurring Disconnect First	Nonrecurring Disconnect Add'l	Svc Order Submitted Elec per LSR	Svc Order Submitted Manually per LSR	Incremental Charge - Manual Svc Order vs. Electronic- 1st	Incremental Charge - Manual Svc Order vs. Electronic- Add'l	Incremental Charge - Manual Svc Order vs. Electronic- Disc 1st	Incremental Charge - Manual Svc Order vs. Electronic- Disc Add'l
											OSS Rates ($)					
											SOMEC	SOMAN	SOMAN	SOMAN	SOMAN	SOMAN
	Tandem Trunk Port - Shared, Per MOU (Melded)					0.000086947										
	Melded Factor: 43.15% of the Tandem Rate															
	Common Transport															
	Common Transport - Per Mile, Per MOU					0.0000023										
	Common Transport - Facilities Termination Per MOU					0.0003224										
UNBUNDLED PORT/LOOP COMBINATIONS - COST BASED RATES																
	>Cost Based Rates are applied where BellSouth is required by FCC and/or State Commission rule to provide Unbundled Local Switching or Switch Ports.															
	> The UNE-P Switching Port Rates Reflected in the Cost Based Section Apply to Embedded Base UNE-Ps as of March 10, 2005 and Consist of the TELRIC Cost Based Rates Plus $1.00 in Accordance with the TRRO.															
	>Features shall apply to the Unbundled Port/Loop Combination - Cost Based Rate section in the same manner as they are applied to the Stand-Alone Unbundled Port section of this Rate Exhibit.															
	>End Office and Tandem Switching Usage and Common Transport Usage rates in the Port section of this rate exhibit shall apply to all combinations of loop/port network elements except for UNE Coin Port/Loop Combinations.															
	>The first and additional Port nonrecurring charges apply to Not Currently Combined Combos. For Currently Combined Combos the nonrecurring charges shall be those identified in the Nonrecurring - Currently Combined sections.															
	2-WIRE VOICE GRADE LOOP WITH 2-WIRE LINE PORT (RES)															
	UNE Port/Loop Combination Rates															
	2-Wire VG Loop/Port Combo - Zone 1					13.70										
	2-Wire VG Loop/Port Combo - Zone 2					22.19										
	2-Wire VG Loop/Port Combo - Zone 3					35.80										
	UNE Loop Rates															
	2-Wire Voice Grade Loop (SL1) - Zone 1		1	UEPRX	UEPLX	11.55										
	2-Wire Voice Grade Loop (SL1) - Zone 2		2	UEPRX	UEPLX	20.04										
	2-Wire Voice Grade Loop (SL1) - Zone 3		3	UEPRX	UEPLX	33.65										
	2-Wire Voice Grade Line Port Rates (Res)															
	2-Wire voice unbundled port - residence			UEPRX	UEPRL	2.15	40.19	19.83	24.91	6.63						
	2-Wire voice unbundled port with Caller ID - res			UEPRX	UEPRC	2.15	40.19	19.83	24.91	6.63						
	2-Wire voice unbundled port outgoing only - res			UEPRX	UEPRO	2.15	40.19	19.83	24.91	6.63						
	2-Wire voice Grade unbundled Alabama extended local dialing parity port with Caller ID - res			UEPRX	UEPAR	2.15	40.19	19.83	24.91	6.63						
	2-Wire voice unbundles res, low usage line port with Caller ID (LUM)			UEPRX	UEPAP	2.15	40.19	19.83	24.91	6.63						
	2-Wire Voice Unbundled Alabama Residence Dialing Plan without Caller ID			UEPRX	UEPWA	2.15	40.19	19.83	24.91	6.63						
	2-Wire voice unbundled Low Usage Line Port without Caller ID Capability			UEPRX	UEPRT	2.15	40.19	19.83	24.91	6.63						
	FEATURES															
	All Features Offered			UEPRX	UEPVF	1.98	0.00	0.00								
	NONRECURRING CHARGES (NRCs) - CURRENTLY COMBINED															
	2-Wire Voice Grade Loop / Line Port Combination - Conversion - Switch-as-is			UEPRX	USAC2		0.10	0.10								
	2-Wire Voice Grade Loop / Line Port Combination - Conversion - Switch with change			UEPRX	USACC		0.10	0.10								
	2-Wire Voice Grade Loop / Line Port Platform - Installation Charge at QuickService location - Not Conversion of Existing Service			UEPRX	URECC		0.10									
	ADDITIONAL NRCs															
	2-Wire Voice Grade Loop/Line Port Combination - Subsequent Activity			UEPRX	USAS2	0.00	0.00	0.00								
	Unbundled Miscellaneous Rate Element, Tag Loop at End User Premise			UEPRX	URETL		8.33	0.83								
	OFF/ON PREMISES EXTENSION CHANNELS															
	2 Wire Analog Voice Grade Extension Loop – Non-Design		1	UEPRX	UEAEN	12.58	37.81	17.56	23.49	5.30						
	2 Wire Analog Voice Grade Extension Loop – Non-Design		2	UEPRX	UEAEN	21.05	37.81	17.56	23.49	5.30						
	2 Wire Analog Voice Grade Extension Loop – Non-Design		3	UEPRX	UEAEN	34.34	37.81	17.56	23.49	5.30						
	2 Wire Analog Voice Grade Extension Loop – Design		1	UEPRX	UEAED	14.38	88.00	55.00	47.24	7.44						
	2 Wire Analog Voice Grade Extension Loop – Design		2	UEPRX	UEAED	22.85	88.00	55.00	47.24	7.44						
	2 Wire Analog Voice Grade Extension Loop – Design		3	UEPRX	UEAED	36.14	88.00	55.00	47.24	7.44						
	INTEROFFICE TRANSPORT															
	Interoffice Transport - Dedicated - 2 Wire Voice Grade - Facility Termination			UEPRX	U1TV2	21.13	40.54	27.41	16.74	6.90						
	Interoffice Transport - Dedicated - 2 Wire Voice Grade - Per Mile or Fraction Mile			UEPRX	U1TVM	0.008838	0.00	0.00								

UNBUNDLED NETWORK ELEMENTS - Alabama

Attachment: 2 Ex. A

CATEGORY	RATE ELEMENTS	Interim	Zone	BCS	USOC	RATES ($)					Svc Order Submitted Elec per LSR	Svc Order Submitted Manually per LSR	Incremental Charge - Manual Svc Order vs. Electronic-1st	Incremental Charge - Manual Svc Order vs. Electronic-Add'l	Incremental Charge - Manual Svc Order vs. Electronic-Disc 1st	Incremental Charge - Manual Svc Order vs. Electronic-Disc Add'l
						Rec	Nonrecurring		Nonrecurring Disconnect		OSS Rates ($)					
							First	Add'l	First	Add'l	SOMEC	SOMAN	SOMAN	SOMAN	SOMAN	SOMAN
	2-WIRE VOICE GRADE LOOP WITH 2-WIRE LINE PORT (BUS)															
	UNE Port/Loop Combination Rates															
	2-Wire VG Loop/Port Combo - Zone 1					13.70										
	2-Wire VG Loop/Port Combo - Zone 2					22.19										
	2-Wire VG Loop/Port Combo - Zone 3					35.80										
	UNE Loop Rates															
	2-Wire Voice Grade Loop (SL1) - Zone 1		1	UEPBX	UEPLX	11.55										
	2-Wire Voice Grade Loop (SL1) - Zone 2		2	UEPBX	UEPLX	20.04										
	2-Wire Voice Grade Loop (SL1) - Zone 3		3	UEPBX	UEPLX	33.65										
	2-Wire Voice Grade Line Port (Bus)															
	2-Wire voice unbundled port without Caller ID - bus			UEPBX	UEPBL	1.15	40.19	19.83	24.91	6.63						
	2-Wire voice unbundled port with Caller + E484 ID - bus			UEPBX	UEPBC	1.15	40.19	19.83	24.91	6.63						
	2-Wire voice unbundled port outgoing only - bus			UEPBX	UEPBO	1.15	40.19	19.83	24.91	6.63						
	2-Wire voice Grade unbundled Alabama extended local dialing parity port with Caller ID - bus			UEPBX	UEPAW	1.15	40.19	19.83	24.91	6.63						
	2-Wire voice unbundled incoming only port with Caller ID - Bus			UEPBX	UEPB1	1.15	40.19	19.83	24.91	6.63						
	2-Wire Voice Unbundled Alabama Business Dialing Plan without Caller ID			UEPBX	UEPWB	1.15	40.19	19.83	24.91	6.63						
	2-Wire voice unbundled Incoming Only Port without Caller ID Capability			UEPBX	UEPBE	1.15	40.19	19.83	24.91	6.63						
	FEATURES															
	All Features Offered			UEPBX	UEPVF	1.98	0.00	0.00								
	NONRECURRING CHARGES (NRCs) - CURRENTLY COMBINED															
	2-Wire Voice Grade Loop / Line Port Combination - Conversion - Switch-as-is			UEPBX	USAC2		0.10	0.10								
	2-Wire Voice Grade Loop / Line Port Combination - Conversion - Switch with change			UEPBX	USACC		0.10	0.10								
	ADDITIONAL NRCs															
	2-Wire Voice Grade Loop/Line Port Combination - Subsequent Activity			UEPBX	USAS2		0.00	0.00								
	Unbundled Miscellaneous Rate Element, Tag Loop at End User Premise			UEPBX	URETL		8.33	0.83								
	OFF/ON PREMISES EXTENSION CHANNELS															
	2 Wire Analog Voice Grade Extension Loop – Non-Design		1	UEPBX	UEAEN	12.58	37.81	17.56	23.49	5.30						
	2 Wire Analog Voice Grade Extension Loop – Non-Design		2	UEPBX	UEAEN	21.05	37.81	17.56	23.49	5.30						
	2 Wire Analog Voice Grade Extension Loop – Non-Design		3	UEPBX	UEAEN	34.34	37.81	17.56	23.49	5.30						
	2 Wire Analog Voice Grade Extension Loop – Design		1	UEPBX	UEAED	14.38	88.00	55.00	47.24	7.44						
	2 Wire Analog Voice Grade Extension Loop – Design		2	UEPBX	UEAED	22.85	88.00	55.00	47.24	7.44						
	2 Wire Analog Voice Grade Extension Loop – Design		3	UEPBX	UEAED	36.14	88.00	55.00	47.24	7.44						
	INTEROFFICE TRANSPORT															
	Interoffice Transport - Dedicated - 2 Wire Voice Grade - Facility Termination			UEPBX	U1TV2	21.13	40.54	27.41	16.74	6.90						
	Interoffice Transport - Dedicated - 2 Wire Voice Grade - Per Mile or Fraction Mile			UEPBX	U1TVM	0.008838	0.00	0.00								
	2-WIRE VOICE GRADE LOOP WITH 2-WIRE LINE PORT (RES - PBX)															
	UNE Port/Loop Combination Rates															
	2-Wire VG Loop/Port Combo - Zone 1					13.70										
	2-Wire VG Loop/Port Combo - Zone 2					22.19										
	2-Wire VG Loop/Port Combo - Zone 3					35.80										
	UNE Loop Rates															
	2-Wire Voice Grade Loop (SL 1) - Zone 1		1	UEPRG	UEPLX	11.55										
	2-Wire Voice Grade Loop (SL 1) - Zone 2		2	UEPRG	UEPLX	20.04										
	2-Wire Voice Grade Loop (SL 1) - Zone 3		3	UEPRG	UEPLX	33.65										
	2-Wire Voice Grade Line Port Rates (RES - PBX)															
	2-Wire VG Unbundled Combination 2-Way PBX Trunk Port - Res			UEPRG	UEPRD	1.15	69.08	32.41	37.43	6.20						
	FEATURES															
	All Features Offered			UEPRG	UEPVF	1.98	0.00	0.00								
	NONRECURRING CHARGES (NRCs) - CURRENTLY COMBINED															
	2-Wire Voice Grade Loop/ Line Port Combination (PBX) - Conversion - Switch-As-Is			UEPRG	USAC2		7.91	1.90								
	2-Wire Voice Grade Loop/ Line Port Combination (PBX) - Conversion - Switch with Change			UEPRG	USACC		7.81	1.90								
	ADDITIONAL NRCs															

UNBUNDLED NETWORK ELEMENTS - Alabama

Attachment: 2 Ex. A

CATEGORY	RATE ELEMENTS	Interim	Zone	BCS	USOC	RATES ($)					Svc Order Submitted Elec per LSR	Svc Order Submitted Manually per LSR	Incremental Charge - Manual Svc Order vs. Electronic-1st	Incremental Charge - Manual Svc Order vs. Electronic-Add'l	Incremental Charge - Manual Svc Order vs. Electronic-Disc 1st	Incremental Charge - Manual Svc Order vs. Electronic-Disc Add'l
						Rec	Nonrecurring		Nonrecurring Disconnect		OSS Rates ($)					
							First	Add'l	First	Add'l	SOMEC	SOMAN	SOMAN	SOMAN	SOMAN	SOMAN
	2-Wire Voice Grade Loop/ Line Port Combination (PBX) - Subsequent Activity			UEPRG	USAS2	0.00	0.00	0.00								
	PBX Subsequent Activity - Change/Rearrange Multiline Hunt Group						7.32	7.32								
	Unbundled Miscellaneous Rate Element, Tag Loop at End User Premise			UEPRG	URETL		8.33	0.83								
OFF/ON PREMISES EXTENSION CHANNELS																
	Local Channel Voice grade, per termination		1	UEPRG	P2JHX	14.38	88.00	55.00	47.24	7.44						
	Local Channel Voice grade, per termination		2	UEPRG	P2JHX	22.85	88.00	55.00	47.24	7.44						
	Local Channel Voice grade, per termination		3	UEPRG	P2JHX	36.14	88.00	55.00	47.24	7.44						
	Non-Wire Direct Serve Channel Voice Grade		1	UEPRG	SDD2X	22.41	131.60	61.92	90.50	13.40						
	Non-Wire Direct Serve Channel Voice Grade		2	UEPRG	SDD2X	23.88	131.60	61.92	90.50	13.40						
	Non-Wire Direct Serve Channel Voice Grade		3	UEPRG	SDD2X	33.72	131.60	61.92	90.50	13.40						
INTEROFFICE TRANSPORT																
	Interoffice Transport - Dedicated - 2 Wire Voice Grade - Facility Termination			UEPRG	U1TV2	21.13	40.54	27.41	16.74	6.90						
	Interoffice Transport - Dedicated - 2 Wire Voice Grade - Per Mile or Fraction Mile			UEPRG	U1TVM	0.008838	0.00	0.00								
2-WIRE VOICE GRADE LOOP WITH 2-WIRE LINE PORT (BUS - PBX)																
UNE Port/Loop Combination Rates																
	2-Wire VG Loop/Port Combo - Zone 1					13.70										
	2-Wire VG Loop/Port Combo - Zone 2					22.19										
	2-Wire VG Loop/Port Combo - Zone 3					35.80										
UNE Loop Rates																
	2-Wire Voice Grade Loop (SL 1) - Zone 1		1	UEPPX	UEPLX	11.55										
	2-Wire Voice Grade Loop (SL 1) - Zone 2		2	UEPPX	UEPLX	20.04										
	2-Wire Voice Grade Loop (SL 1) - Zone 3		3	UEPPX	UEPLX	33.65										
2-Wire Voice Grade Line Port Rates (BUS - PBX)																
	Line Side Unbundled Combination 2-Way PBX Trunk Port - Bus			UEPPX	UEPPC	2.15	69.08	32.41	37.43	6.20						
	Line Side Unbundled Outward PBX Trunk Port - Bus			UEPPX	UEPPO	2.15	69.08	32.41	37.43	6.20						
	Line Side Unbundled Incoming PBX Trunk Port - Bus			UEPPX	UEPP1	2.15	69.08	32.41	37.43	6.20						
	2-Wire Voice Unbundled 2-Way Combination PBX Alabama Calling Port			UEPPX	UEPA2	2.15	69.08	32.41	37.43	6.20						
	2-Wire Voice Unbundled PBX LD Terminal Ports			UEPPX	UEPLD	2.15	69.08	32.41	37.43	6.20						
	2-Wire Voice Unbundled 2-Way Combination PBX Usage Port			UEPPX	UEPXA	2.15	69.08	32.41	37.43	6.20						
	2-Wire Voice Unbundled PBX Toll Terminal Hotel Ports			UEPPX	UEPXB	2.15	69.08	32.41	37.43	6.20						
	2-Wire Voice Unbundled PBX LD DDD Terminals Port			UEPPX	UEPXC	2.15	69.08	32.41	37.43	6.20						
	2-Wire Voice Unbundled PBX LD Terminal Switchboard Port			UEPPX	UEPXD	2.15	69.08	32.41	37.43	6.20						
	2-Wire Voice Unbundled PBX LD Terminal Switchboard IDD Capable Port			UEPPX	UEPXE	2.15	69.08	32.41	37.43	6.20						
	2-Wire Voice Unbundled 2-Way PBX Hotel/Hospital Economy Administrative Calling Port			UEPPX	UEPXL	2.15	69.08	32.41	37.43	6.20						
	2-Wire Voice Unbundled 2-Way PBX Hotel/Hospital Economy Room Calling Port			UEPPX	UEPXM	2.15	69.08	32.41	37.43	6.20						
	2-Wire Voice Unbundled 1-Way Outgoing PBX Hotel/Hospital Discount Room Calling Port			UEPPX	UEPXO	2.15	69.08	32.41	37.43	6.20						
	2-Wire Voice Unbundled 1-Way Outgoing PBX Measured Port			UEPPX	UEPXS	2.15	69.08	32.41	37.43	6.20						
FEATURES																
	All Features Offered			UEPPX	UEPVF	1.98	0.00	0.00								
NONRECURRING CHARGES (NRCs) - CURRENTLY COMBINED																
	2-Wire Voice Grade Loop/ Line Port Combination (PBX) - Conversion - Switch-As-Is			UEPPX	USAC2		7.91	1.90								
	2-Wire Voice Grade Loop/ Line Port Combination (PBX) - Conversion - Switch with Change			UEPPX	USACC		7.91	1.90								
ADDITIONAL NRCs																
	2-Wire Voice Grade Loop/ Line Port Combination (PBX) - Subsequent Activity			UEPPX	USAS2	0.00	0.00	0.00								
	PBX Subsequent Activity - Change/Rearrange Multiline Hunt Group						7.32	7.32								
	Unbundled Miscellaneous Rate Element, Tag Loop at End User Premise			UEPPX	URETL		8.33	0.83								
OFF/ON PREMISES EXTENSION CHANNELS																
	Local Channel Voice grade, per termination		1	UEPPX	P2JHX	14.38	88.00	55.00	47.24	7.44						

UNBUNDLED NETWORK ELEMENTS - Alabama

Attachment: 2 Ex. A

CATEGORY	RATE ELEMENTS	Interim	Zone	BCS	USOC	RATES ($)					Svc Order Submitted Elec per LSR	Svc Order Submitted Manually per LSR	Incremental Charge - Manual Svc Order vs. Electronic-1st	Incremental Charge - Manual Svc Order vs. Electronic-Add'l	Incremental Charge - Manual Svc Order vs. Electronic-Disc 1st	Incremental Charge - Manual Svc Order vs. Electronic-Disc Add'l
						Rec	Nonrecurring		Nonrecurring Disconnect		OSS Rates ($)					
							First	Add'l	First	Add'l	SOMEC	SOMAN	SOMAN	SOMAN	SOMAN	SOMAN
	Local Channel Voice grade, per termination		2	UEPPX	P2JHX	22.85	88.00	55.00	47.24	7.44						
	Local Channel Voice grade, per termination		3	UEPPX	P2JHX	36.14	88.00	55.00	47.24	7.44						
	Non-Wire Direct Serve Channel Voice Grade		1	UEPPX	SDD2X	22.41	131.60	61.92	90.50	13.40						
	Non-Wire Direct Serve Channel Voice Grade		2	UEPPX	SDD2X	23.88	131.60	61.92	90.50	13.40						
	Non-Wire Direct Serve Channel Voice Grade		3	UEPPX	SDD2X	33.72	131.60	61.92	90.50	13.40						
INTEROFFICE TRANSPORT																
	Interoffice Transport - Dedicated - 2 Wire Voice Grade - Facility Termination			UEPPX	U1TV2	21.13	40.54	27.41	16.74	6.90						
	Interoffice Transport - Dedicated - 2 Wire Voice Grade - Per Mile or Fraction Mile			UEPPX	U1TVM	0.008838	0.00	0.00								
2-WIRE VOICE GRADE LOOP WITH 2-WIRE ANALOG LINE COIN PORT																
UNE Port/Loop Combination Rates																
	2-Wire VG Coin Port/Loop Combo – Zone 1					13.70										
	2-Wire VG Coin Port/Loop Combo – Zone 2					22.19										
	2-Wire VG Coin Port/Loop Combo – Zone 3					35.80										
UNE Loop Rates																
	2-Wire Voice Grade Loop (SL1) - Zone 1		1	UEPCO	UEPLX	11.55										
	2-Wire Voice Grade Loop (SL1) - Zone 2		2	UEPCO	UEPLX	20.04										
	2-Wire Voice Grade Loop (SL1) - Zone 3		3	UEPCO	UEPLX	33.65										
2-Wire Voice Grade Line Ports (COIN)																
	2-Wire Coin 2-Way without Operator Screening and without Blocking (AL, KY, LA, MS)			UEPCO	UEPRF	2.15	40.19	19.83	24.91	6.63						
	2-Wire Coin 2-Way with Operator Screening (AL, KY)			UEPCO	UEPRE	2.15	40.19	19.83	24.91	6.63						
	2-Wire Coin 2-Way with Operator Screening and Blocking: 011, 900/976, 1+DDD (AL, KY, LA, MS)			UEPCO	UEPRA	2.15	40.19	19.83	24.91	6.63						
	2-Wire Coin 2-Way with Operator Screening and 011 Blocking (AL, LA, MS)			UEPCO	UEPRB	2.15	40.19	19.83	24.91	6.63						
	2-Wire Coin 2-Way with Operator Screening & Blocking: 900/976, 1+DDD, 011+, & Local (AL, KY, LA, MS)			UEPCO	UEPCD	2.15	40.19	19.83	24.91	6.63						
	2-Wire Coin Outward with Operator Screening and 011 Blocking (AL, FL)			UEPCO	UEPRK	2.15	40.19	19.83	24.91	6.63						
	2-Wire Coin Outward with Operator Screening and Blocking: 011, 900/976, 1+DDD (AL, KY, LA, MS)			UEPCO	UEPRH	2.15	40.19	19.83	24.91	6.63						
	2-Wire Coin Outward Operator Screening & Blocking: 900/976, 1+DDD, 011+, and Local (AL, KY, LA, MS)			UEPCO	UEPCN	2.15	40.19	19.83	24.91	6.63						
	2-Wire 2-Way Smartline with 900/976 (all states except LA)			UEPCO	UEPCK	2.15	40.19	19.83	24.91	6.63						
	2-Wire Coin Outward Smartline with 900/976 (all states except LA)			UEPCO	UEPCR	2.15	40.19	19.83	24.91	6.63						
ADDITIONAL UNE COIN PORT/LOOP (RC)																
	UNE Coin Port/Loop Combo Usage (Flat Rate)			UEPCO	URECU	1.56	0.00	0.00	0.00	0.00						
NONRECURRING CHARGES - CURRENTLY COMBINED																
	2-Wire Voice Grade Loop / Line Port Combination - Conversion - Switch-as-is			UEPCO	USAC2		0.10	0.10								
	2-Wire Voice Grade Loop / Line Port Combination - Conversion - Switch with change			UEPCO	USACC		0.10	0.10								
ADDITIONAL NRCs																
	2-Wire Voice Grade Loop/Line Port Combination - Subsequent Activity			UEPCO	USAS2		0.00	0.00								
	Unbundled Miscellaneous Rate Element, Tag Loop at End User Premise			UEPCO	URETL		8.33	0.83								
2-WIRE VOICE LOOP/ 2WIRE VOICE GRADE IO TRANSPORT/ 2-WIRE LINE PORT (RES)																
UNE Port/Loop Combination Rates																
	2-Wire VG Loop/IO Tranport/Port Combo - Zone 1					16.76										
	2-Wire VG Loop/IO Tranport/Port Combo - Zone 2					25.23										
	2-Wire VG Loop/IO Tranport/Port Combo - Zone 3					38.52										
UNE Loop Rates																
	2-Wire Voice Grade Loop (SL2) - Zone 1		1	UEPFR	UECF2	14.38										
	2-Wire Voice Grade Loop (SL2) - Zone 2		2	UEPFR	UECF2	22.85										
	2-Wire Voice Grade Loop (SL2) - Zone 3		3	UEPFR	UECF2	36.14										
2-Wire Voice Grade Line Port Rates (Res)																
	2-Wire voice unbundled port - residence			UEPFR	UEPRL	2.38	90.38	57.27	48.66	8.77						
	2-Wire voice unbundled port with Caller ID - res			UEPFR	UEPRC	2.38	90.38	57.27	48.66	8.77						
	2-Wire voice unbundled port outgoing only - res			UEPFR	UEPRO	2.38	90.38	57.27	48.66	8.77						

CATEGORY	RATE ELEMENTS	Interim	Zone	BCS	USOC	RATES ($) Rec	Nonrecurring First	Nonrecurring Add'l	Nonrecurring Disconnect First	Nonrecurring Disconnect Add'l	Svc Order Submitted Elec per LSR	Svc Order Submitted Manually per LSR	Incremental Charge - Manual Svc Order vs. Electronic-1st	Incremental Charge - Manual Svc Order vs. Electronic-Add'l	Incremental Charge - Manual Svc Order vs. Electronic-Disc 1st	Incremental Charge - Manual Svc Order vs. Electronic-Disc Add'l
											OSS Rates ($)					
											SOMEC	SOMAN	SOMAN	SOMAN	SOMAN	SOMAN
	2-Wire voice Grade unbundled Alabama extended local dialing parity port with Caller ID - res			UEPFR	UEPAR	2.38	90.38	57.27	48.66	8.77						
	2-Wire voice unbundles res, low usage line port with Caller ID (LUM)			UEPFR	UEPAP	2.38	90.38	57.27	48.66	8.77						
	2-Wire Voice Unbundled Alabama Residence Dialing Plan without Caller ID			UEPFR	UEPWA	2.38	90.38	57.27	48.66	8.77						
INTEROFFICE TRANSPORT																
	Interoffice Transport - Dedicated - 2 Wire Voice Grade - Facility Termination			UEPFR	U1TV2	21.13	40.54	27.41	16.74	6.90						
	Interoffice Transport - Dedicated - 2 Wire Voice Grade - Per Mile or Fraction Mile			UEPFR	1L5XX	0.008838										
FEATURES																
	All Features Offered			UEPFR	UEPVF	1.98	0.00	0.00								
NONRECURRING CHARGES (NRCs) - CURRENTLY COMBINED																
	2-Wire Loop / Dedicated IO Transport / 2 Wire Line Port Combination - Conversion - Switch-as-is			UEPFR	USAC2		8.48	1.87								
	2-Wire Loop / Dedicated IO Transport / 2 Wire Line Port Combination - Conversion - Switch-With-Change			UEPFR	USACC		8.48	1.87								
	Unbundled Miscellaneous Rate Element, Tag Designed Loop at End User Premise			UEPFR	URETN		11.21	1.10								
2-WIRE VOICE LOOP/ 2WIRE VOICE GRADE IO TRANSPORT/ 2-WIRE LINE PORT (BUS)																
UNE Port/Loop Combination Rates																
	2-Wire VG Loop/IO Tranport/Port Combo - Zone 1					16.76										
	2-Wire VG Loop/IO Tranport/Port Combo - Zone 2					25.23										
	2-Wire VG Loop/IO Tranport/Port Combo - Zone 3					38.52										
UNE Loop Rates																
	2-Wire Voice Grade Loop (SL2) - Zone 1		1	UEPFB	UECF2	14.38										
	2-Wire Voice Grade Loop (SL2) - Zone 2		2	UEPFB	UECF2	22.85										
	2-Wire Voice Grade Loop (SL2) - Zone 3		3	UEPFB	UECF2	36.14										
2-Wire Voice Grade Line Port (Bus)																
	2-Wire voice unbundled port without Caller ID - bus			UEPFB	UEPBL	2.38	90.38	57.27	48.66	8.77						
	2-Wire voice unbundled port with Caller + E484 ID - bus			UEPFB	UEPBC	2.38	90.38	57.27	48.66	8.77						
	2-Wire voice unbundled port outgoing only - bus			UEPFB	UEPBO	2.38	90.38	57.27	48.66	8.77						
	2-Wire voice Grade unbundled Alabama extended local dialing parity port with Caller ID - bus			UEPFB	UEPAW	2.38	90.38	57.27	48.66	8.77						
	2-Wire voice unbundled incoming only port with Caller ID - Bus			UEPFB	UEPB1	2.38	90.38	57.27	48.66	8.77						
	2-Wire Voice Unbundled Alabama Business Dialing Plan without Caller ID			UEPFB	UEPWB	2.38	90.38	57.27	48.66	8.77						
INTEROFFICE TRANSPORT																
	Interoffice Transport - Dedicated - 2 Wire Voice Grade - Facility Termination			UEPFB	U1TV2	21.13	40.54	27.41	16.74	6.90						
	Interoffice Transport - Dedicated - 2 Wire Voice Grade - Per Mile or Fraction Mile			UEPFB	1L5XX	0.008838										
FEATURES																
	All Features Offered			UEPFB	UEPVF	1.98	0.00	0.00								
NONRECURRING CHARGES (NRCs) - CURRENTLY COMBINED																
	2-Wire Loop / Dedicated IO Transport / 2 Wire Line Port Combination - Conversion - Switch-as-is			UEPFB	USAC2		8.48	1.87								
	2-Wire Loop / Dedicated IO Transport / 2 Wire Line Port Combination - Conversion - Switch with change			UEPFB	USACC		8.48	1.87								
	Unbundled Miscellaneous Rate Element, Tag Designed Loop at End User Premise			UEPFB	URETN		11.21	1.10								
2-WIRE VOICE LOOP/ 2WIRE VOICE GRADE IO TRANSPORT/ 2-WIRE LINE PORT (PBX)																
UNE Port/Loop Combination Rates																
	2-Wire VG Loop/IO Tranport/Port Combo - Zone 1					16.76										
	2-Wire VG Loop/IO Tranport/Port Combo - Zone 2					25.23										
	2-Wire VG Loop/IO Tranport/Port Combo - Zone 3					38.52										
UNE Loop Rates																
	2-Wire Voice Grade Loop (SL2) - Zone 1		1	UEPFP	UECF2	14.38										
	2-Wire Voice Grade Loop (SL2) - Zone 2		2	UEPFP	UECF2	22.85										
	2-Wire Voice Grade Loop (SL2) - Zone 3		3	UEPFP	UECF2	36.14										
2-Wire Voice Grade Line Port Rates (BUS - PBX)																
	Line Side Unbundled Combination 2-Way PBX Trunk Port - Bus			UEPFP	UEPPC	2.38	119.27	69.85	61.18	8.34						

UNBUNDLED NETWORK ELEMENTS - Alabama

Attachment: 2 Ex. A

CATEGORY	RATE ELEMENTS	Interim	Zone	BCS	USOC	RATES ($) Rec	Nonrecurring First	Nonrecurring Add'l	Nonrecurring Disconnect First	Nonrecurring Disconnect Add'l	Svc Order Submitted Elec per LSR	Svc Order Submitted Manually per LSR	Incremental Charge - Manual Svc Order vs. Electronic- 1st	Incremental Charge - Manual Svc Order vs. Electronic- Add'l	Incremental Charge - Manual Svc Order vs. Electronic- Disc 1st	Incremental Charge - Manual Svc Order vs. Electronic- Disc Add'l
											OSS Rates ($)					
							First	Add'l	First	Add'l	SOMEC	SOMAN	SOMAN	SOMAN	SOMAN	SOMAN
	Line Side Unbundled Outward PBX Trunk Port - Bus			UEPFP	UEPPO	2.38	119.27	69.85	61.18	8.34						
	Line Side Unbundled Incoming PBX Trunk Port - Bus			UEPFP	UEPP1	2.38	119.27	69.85	61.18	8.34						
	2-Wire Voice Unbundled 2-Way Combination PBX Alabama Calling Port			UEPFP	UEPA2	2.38	119.27	69.85	61.18	8.34						
	2-Wire Voice Unbundled PBX LD Terminal Ports			UEPFP	UEPLD	2.38	119.27	69.85	61.18	8.34						
	2-Wire Voice Unbundled 2-Way Combination PBX Usage Port			UEPFP	UEPXA	2.38	119.27	69.85	61.18	8.34						
	2-Wire Voice Unbundled PBX Toll Terminal Hotel Ports			UEPFP	UEPXB	2.38	119.27	69.85	61.18	8.34						
	2-Wire Voice Unbundled PBX LD DDD Terminals Port			UEPFP	UEPXC	2.38	119.27	69.85	61.18	8.34						
	2-Wire Voice Unbundled PBX LD Terminal Switchboard Port			UEPFP	UEPXD	2.38	119.27	69.85	61.18	8.34						
	2-Wire Voice Unbundled PBX LD Terminal Switchboard IDD Capable Port			UEPFP	UEPXE	2.38	119.27	69.85	61.18	8.34						
	2-Wire Voice Unbundled 2-Way PBX Hotel/Hospital Economy Administrative Calling Port			UEPFP	UEPXL	2.38	119.27	69.85	61.18	8.34						
	2-Wire Voice Unbundled 2-Way PBX Hotel/Hospital Economy Room Calling Port			UEPFP	UEPXM	2.38	119.27	69.85	61.18	8.34						
	2-Wire Voice Unbundled 1-Way Outgoing PBX Hotel/Hospital Discount Room Calling Port			UEPFP	UEPXO	2.38	119.27	69.85	61.18	8.34						
	2-Wire Voice Unbundled 1-Way Outgoing PBX Measured Port			UEPFP	UEPXS	2.38	119.27	69.85	61.18	8.34						
INTEROFFICE TRANSPORT																
	Interoffice Transport - Dedicated - 2 Wire Voice Grade - Facility Termination			UEPFP	U1TV2	21.13	40.54	27.41	16.74	6.90						
	Interoffice Transport - Dedicated - 2 Wire Voice Grade - Per Mile or Fraction Mile			UEPFP	1L5XX	0.008838										
FEATURES																
	All Features Offered			UEPFP	UEPVF	1.98	0.00	0.00								
NONRECURRING CHARGES (NRCs) - CURRENTLY COMBINED																
	2-Wire Loop / Dedicated IO Transport / 2 Wire Line Port Combination - Conversion - Switch-as-is			UEPFP	USAC2		8.48	1.87								
	2-Wire Loop / Dedicated IO Transport / 2 Wire Line Port Combination - Conversion - Switch with change			UEPFP	USACC		8.48	1.87								
	Unbundled Miscellaneous Rate Element, Tag Designed Loop at End User Premise			UEPFP	URETN		11.21	1.10								
2-WIRE VOICE GRADE LOOP- BUS ONLY - WITH 2-WIRE DID TRUNK PORT																
UNE Port/Loop Combination Rates																
	2-Wire VG Loop/2-Wire DID Trunk Port Combo - UNE Zone 1					23.40										
	2-Wire VG Loop/2-Wire DID Trunk Port Combo - UNE Zone 2					31.88										
	2-Wire VG Loop/2-Wire DID Trunk Port Combo - UNE Zone 3					45.17										
UNE Loop Rates																
	2-Wire Analog Voice Grade Loop - (SL2) - UNE Zone 1		1	UEPPX	UECD1	14.38										
	2-Wire Analog Voice Grade Loop - (SL2) - UNE Zone 2		2	UEPPX	UECD1	22.85										
	2-Wire Analog Voice Grade Loop - (SL2) - UNE Zone 3		3	UEPPX	UECD1	36.14										
UNE Port Rate																
	Exchange Ports - 2-Wire DID Port			UEPPX	UEPD1	9.02	207.31	73.74	107.14	11.20						
NONRECURRING CHARGES - CURRENTLY COMBINED																
	2-Wire Voice Grade Loop / 2-Wire DID Trunk Port Combination - Switch-as-is			UEPPX	USAC1		7.31	1.87								
	2-Wire Voice Grade Loop / 2-Wire DID Trunk Port Conversion with BellSouth Allowable Changes			UEPPX	USA1C		7.31	1.87								
ADDITIONAL NRCs																
	2-Wire DID Subsequent Activity - Add Trunks, Per Trunk			UEPPX	USAS1		26.78	26.78								
	Unbundled Miscellaneous Rate Element, Tag Designed Loop at End User Premise			UEPPX	URETN		11.21	1.10								
Telephone Number/Trunk Group Establisment Charges																
	DID Trunk Termination (One Per Port)			UEPPX	NDT	0.00	0.00	0.00								
	Additional DID Numbers for each Group of 20 DID Numbers			UEPPX	ND4	0.00	0.00	0.00								
	DID Numbers, Non- consecutive DID Numbers , Per Number			UEPPX	ND5	0.00	0.00	0.00								
	Reserve Non-Consecutive DID numbers			UEPPX	ND6	0.00	0.00	0.00								
	Reserve DID Numbers			UEPPX	NDV	0.00	0.00	0.00								
2-WIRE ISDN DIGITAL GRADE LOOP WITH 2-WIRE ISDN DIGITAL LINE SIDE PORT																
UNE Port/Loop Combination Rates																
	2W ISDN Digital Grade Loop/2W ISDN Digital Line Side Port - UNE Zone 1					28.28										
	2W ISDN Digital Grade Loop/2W ISDN Digital Line Side Port - UNE Zone 2					38.86										

UNBUNDLED NETWORK ELEMENTS - Alabama

Attachment: 2 Ex. A

CATEGORY	RATE ELEMENTS	Interim	Zone	BCS	USOC	RATES ($) Rec	Nonrecurring First	Nonrecurring Add'l	Nonrecurring Disconnect First	Nonrecurring Disconnect Add'l	Svc Order Submitted Elec per LSR (OSS Rates ($)) SOMEC	Svc Order Submitted Manually per LSR (OSS Rates ($)) SOMAN	Incremental Charge - Manual Svc Order vs. Electronic-1st (OSS Rates ($)) SOMAN	Incremental Charge - Manual Svc Order vs. Electronic-Add'l (OSS Rates ($)) SOMAN	Incremental Charge - Manual Svc Order vs. Electronic-Disc 1st (OSS Rates ($)) SOMAN	Incremental Charge - Manual Svc Order vs. Electronic-Disc Add'l (OSS Rates ($)) SOMAN
	2W ISDN Digital Grade Loop/2W ISDN Digital Line Side Port - UNE Zone 3					53.84										
	UNE Loop Rates															
	2-Wire ISDN Digital Grade Loop - UNE Zone 1		1	UEPPB UEPPR	USL2X	19.03										
	2-Wire ISDN Digital Grade Loop - UNE Zone 2		2	UEPPB UEPPR	USL2X	29.62										
	2-Wire ISDN Digital Grade Loop - UNE Zone 3		3	UEPPB UEPPR	USL2X	45.60										
	UNE Port Rate															
	Exchange Port - 2-Wire ISDN Line Side Port			UEPPR	UEPPR	9.24	190.01	132.76	100.67	21.28						
	Exchange Port - 2-Wire ISDN Line Side Port			UEPPB	UEPPB	9.24	190.01	132.76	100.67	21.28						
	NONRECURRING CHARGES - CURRENTLY COMBINED															
	2-Wire ISDN Digital Grade Loop / 2-Wire ISDN Line Side Port Combination - Conversion			UEPPB UEPPR	USACB	0.00	38.51	27.02								
	ADDITIONAL NRCs															
	Unbundled Miscellaneous Rate Element, Tag Designed Loop at End User Premise			UEPPB UEPPR	URETN		11.21	1.10								
	Unbundled Miscellaneous Rate Element, Tag Loop at End User Premise			UEPPB UEPPR	URETL		8.33	0.83								
	B-CHANNEL USER PROFILE ACCESS:															
	CVS/CSD (DMS/5ESS)			UEPPB UEPPR	U1UCA	0.00	0.00	0.00								
	CVS (EWSD)			UEPPB UEPPR	U1UCB	0.00	0.00	0.00								
	CSD			UEPPB UEPPR	U1UCC	0.00	0.00	0.00								
	B-CHANNEL AREA PLUS USER PROFILE ACCESS: (AL,KY,LA,MS SC,MS, & TN)															
	CVS/CSD (DMS/5ESS)			UEPPB UEPPR	U1UCD	0.00	0.00	0.00								
	CVS (EWSD)			UEPPB UEPPR	U1UCE	0.00	0.00	0.00								
	CSD			UEPPB UEPPR	U1UCF	0.00	0.00	0.00								
	USER TERMINAL PROFILE															
	User Terminal Profile (EWSD only)			UEPPB UEPPR	U1UMA	0.00	0.00	0.00								
	VERTICAL FEATURES															
	All Vertical Features - One per Channel B User Profile			UEPPB UEPPR	UEPVF	1.98	0.00	0.00								
	INTEROFFICE CHANNEL MILEAGE															
	Interoffice Channel mileage each, including first mile and facilities termination			UEPPB UEPPR	M1GNC	21.13	40.54	27.41	16.74	6.90						
	Interoffice Channel mileage each, additional mile			UEPPB UEPPR	M1GNM	0.008838	0.00	0.00								
UNBUNDLED CENTREX PORT/LOOP COMBINATIONS - COST BASED RATES																
	UNE-P CENTREX - 1AESS - (Valid in AL,FL,GA,KY,LA,MS,&TN only)															
	2-Wire VG Loop/2-Wire Voice Grade Port (Centrex) Combo															
	UNE Port/Loop Combination Rates (Non-Design)															
	2-Wire VG Loop/2-Wire Voice Grade Port (Centrex) Port Combo - Non-Design					13.70										
	2-Wire VG Loop/2-Wire Voice Grade Port (Centrex)Port Combo - Non-Design					22.19										
	2-Wire VG Loop/2-Wire Voice Grade Port (Centrex)Port Combo - Non-Design					35.80										
	UNE Port/Loop Combination Rates (Design)															
	2-Wire VG Loop/2-Wire Voice Grade Port (Centrex) Port Combo - Design					16.53										
	2-Wire VG Loop/2-Wire Voice Grade Port (Centrex)Port Combo - Design					25.00										
	2-Wire VG Loop/2-Wire Voice Grade Port (Centrex)Port Combo - Design					38.29										
	UNE Loop Rate															
	2-Wire Voice Grade Loop (SL 1) - Zone 1		1	UEP91	UECS1	11.55										
	2-Wire Voice Grade Loop (SL 1) - Zone 2		2	UEP91	UECS1	20.04										
	2-Wire Voice Grade Loop (SL 1) - Zone 3		3	UEP91	UECS1	33.65										
	2-Wire Voice Grade Loop (SL 2) - Zone 1		1	UEP91	UECS2	14.38										
	2-Wire Voice Grade Loop (SL 2) - Zone 2		2	UEP91	UECS2	22.85										
	2-Wire Voice Grade Loop (SL 2) - Zone 3		3	UEP91	UECS2	36.14										
	UNE Ports															
	All States (Except North Carolina and Sout Carolina)															
	2-Wire Voice Grade Port (Centrex) Basic Local Area			UEP91	UEPYA	2.15	40.19	19.83	24.91	6.63						
	2-Wire Voice Grade Port (Centrex 800 termination)Basic Local Area			UEP91	UEPYB	2.15	40.19	19.83	24.91	6.63						

UNBUNDLED NETWORK ELEMENTS - Alabama

Attachment: 2 Ex. A

CATEGORY	RATE ELEMENTS	Interim	Zone	BCS	USOC	RATES ($)					Svc Order Submitted Elec per LSR	Svc Order Submitted Manually per LSR	Incremental Charge - Manual Svc Order vs. Electronic-1st	Incremental Charge - Manual Svc Order vs. Electronic-Add'l	Incremental Charge - Manual Svc Order vs. Electronic-Disc 1st	Incremental Charge - Manual Svc Order vs. Electronic-Disc Add'l
						Rec	Nonrecurring		Nonrecurring Disconnect		OSS Rates ($)					
							First	Add'l	First	Add'l	SOMEC	SOMAN	SOMAN	SOMAN	SOMAN	SOMAN
	2-Wire Voice Grade Port (Centrex with Caller ID)Note1 Basic Local Area			UEP91	UEPYH	2.15	40.19	19.83	24.91	6.63						
	2-Wire Voice Grade Port (Centrex from diff Serving Wire Center) Note 2, 3 Basic Local Area			UEP91	UEPYM	2.15	90.38	57.27	48.66	8.77						
	2-Wire Voice Grade Port, Diff Serving Wire Center - 800 Service Term - Basic Local Area			UEP91	UEPYZ	2.15	90.38	57.27	48.66	8.77						
	2-Wire Voice Grade Port terminated in on Megalink or equivalent - Basic Local Area			UEP91	UEPY9	2.15	40.19	19.83	24.91	6.63						
	2-Wire Voice Grade Port Terminated on 800 Service Term - Basic Local Area			UEP91	UEPY2	2.15	40.19	19.83	24.91	6.63						
AL, KY, LA, MS, & TN Only																
	2-Wire Voice Grade Port (Centrex)			UEP91	UEPQA	2.15	40.19	19.83	24.91	6.63						
	2-Wire Voice Grade Port (Centrex 800 termination)			UEP91	UEPQB	2.15	40.19	19.83	24.91	6.63						
	2-Wire Voice Grade Port (Centrex with Caller ID)1			UEP91	UEPQH	2.15	40.19	19.83	24.91	6.63						
	2-Wire Voice Grade Port (Centrex from diff Serving Wire Center)2,3			UEP91	UEPQM	2.15	90.38	57.27	48.66	8.77						
	2-Wire Voice Grade Port, Diff Serving Wire Center - 2,3 - 800 Service Term			UEP91	UEPQZ	2.15	90.38	57.27	48.66	8.77						
	2-Wire Voice Grade Port terminated in on Megalink or equivalent			UEP91	UEPQ9	2.15	40.19	19.83	24.91	6.63						
	2-Wire Voice Grade Port Terminated on 800 Service Term			UEP91	UEPQ2	2.15	40.19	19.83	24.91	6.63						
Local Switching																
	Centrex Intercom Funtionality, per port			UEP91	URECS	0.5488										
Features																
	All Standard Features Offered, per port			UEP91	UEPVF	1.98										
	All Select Features Offered, per port			UEP91	UEPVS	0.00	405.52									
	All Centrex Control Features Offered, per port			UEP91	UEPVC	1.98										
NARS																
	Unbundled Network Access Register - Combination			UEP91	UARCX	0.00	0.00	0.00	0.00	0.00						
	Unbundled Network Access Register - Indial			UEP91	UAR1X	0.00	0.00	0.00	0.00	0.00						
	Unbundled Network Access Register - Outdial			UEP91	UAROX	0.00	0.00	0.00	0.00	0.00						
Miscellaneous Terminations																
2-Wire Trunk Side																
	Trunk Side Terminations, each			UEP91	CENA6	8.05	119.31	18.74	59.90	3.76						
Interoffice Channel Mileage - 2-Wire																
	Interoffice Channel Facilities Termination - Voice Grade			UEP91	M1GBC	21.13	40.54	27.41	16.74	6.90						
	Interoffice Channel mileage, per mile or fraction of mile			UEP91	M1GBM	0.008838										
Feature Activations (DS0) Centrex Loops on Channelized DS1 Service																
D4 Channel Bank Feature Activations																
	Feature Activation on D-4 Channel Bank Centrex Loop Slot			UEP91	1PQWS	0.56										
	Feature Activation on D-4 Channel Bank FX line Side Loop Slot			UEP91	1PQW6	0.56										
	Feature Activation on D-4 Channel Bank FX Trunk Side Loop Slot			UEP91	1PQW7	0.56										
	Feature Activation on D-4 Channel Bank Centrex Loop Slot - Different Wire Center			UEP91	1PQWP	0.56										
	Feature Activation on D-4 Channel Bank Private Line Loop Slot			UEP91	1PQWV	0.56										
	Feature Activation on D-4 Channel Bank Tjie Line/Trunk Loop Slot			UEP91	1PQWQ	0.56										
	Feature Activation on D-4 Channel Bank WATS Loop Slot			UEP91	1PQWA	0.56										
Non-Recurring Charges (NRC) Associated with UNE-P Centrex																
	Conversion - Currently Combined Switch-As-Is with allowed changes, per port			UEP91	USAC2		0.10	0.10								
	Conversion of Existing Centrex Common Block			UEP91	USACN		37.75	16.58								
	New Centrex Standard Common Block			UEP91	M1ACS	0.00	667.21									
	New Centrex Customized Common Block			UEP91	M1ACC	0.00	667.21									
	Secondary Block, per Block			UEP91	M2CC1	0.00	78.02									
	NAR Establishment Charge, Per Occasion			UEP91	URECA	0.00	72.73									
Additional Non-Recurring Charges (NRC)																
	Unbundled Miscellaneous Rate Element, Tag Loop at End Use Premise			UEP91	URETL		8.33	0.83								
	Unbundled Miscellaneous Rate Element, Tag Design Loop at End Use Premise			UEP91	URETN		11.21	1.10								

UNBUNDLED NETWORK ELEMENTS - Alabama

Attachment: 2 Ex. A

CATEGORY	RATE ELEMENTS	Interim	Zone	BCS	USOC	RATES ($)					Svc Order Submitted Elec per LSR	Svc Order Submitted Manually per LSR	Incremental Charge - Manual Svc Order vs. Electronic-1st	Incremental Charge - Manual Svc Order vs. Electronic-Add'l	Incremental Charge - Manual Svc Order vs. Electronic-Disc 1st	Incremental Charge - Manual Svc Order vs. Electronic-Disc Add'l
						Rec	Nonrecurring		Nonrecurring Disconnect		OSS Rates ($)					
							First	Add'l	First	Add'l	SOMEC	SOMAN	SOMAN	SOMAN	SOMAN	SOMAN
	UNE-P CENTREX - 5ESS (Valid in All States)															
	2-Wire VG Loop/2-Wire Voice Grade Port (Centrex) Combo															
	UNE Port/Loop Combination Rates (Non-Design)															
	2-Wire VG Loop/2-Wire Voice Grade Port (Centrex) Port Combo - Non-Design					13.70										
	2-Wire VG Loop/2-Wire Voice Grade Port (Centrex)Port Combo - Non-Design					22.19										
	2-Wire VG Loop/2-Wire Voice Grade Port (Centrex)Port Combo - Non-Design					35.80										
	UNE Port/Loop Combination Rates (Design)															
	2-Wire VG Loop/2-Wire Voice Grade Port (Centrex) Port Combo - Design					16.53										
	2-Wire VG Loop/2-Wire Voice Grade Port (Centrex)Port Combo - Design					25.00										
	2-Wire VG Loop/2-Wire Voice Grade Port (Centrex)Port Combo - Design					38.29										
	UNE Loop Rate															
	2-Wire Voice Grade Loop (SL 1) - Zone 1		1	UEP95	UECS1	11.55										
	2-Wire Voice Grade Loop (SL 1) - Zone 2		2	UEP95	UECS1	20.04										
	2-Wire Voice Grade Loop (SL 1) - Zone 3		3	UEP95	UECS1	33.65										
	2-Wire Voice Grade Loop (SL 2) - Zone 1		1	UEP95	UECS2	14.38										
	2-Wire Voice Grade Loop (SL 2) - Zone 2		2	UEP95	UECS2	22.85										
	2-Wire Voice Grade Loop (SL 2) - Zone 3		3	UEP95	UECS2	36.14										
	UNE Port Rate															
	All States															
	2-Wire Voice Grade Port (Centrex) Basic Local Area			UEP95	UEPYA	2.15	40.19	19.83	24.91	6.63						
	2-Wire Voice Grade Port (Centrex 800 termination)			UEP95	UEPYB	2.15	40.19	19.83	24.91	6.63						
	2-Wire Voice Grade Port (Centrex with Caller ID)1Basic Local Area			UEP95	UEPYH	2.15	40.19	19.83	24.91	6.63						
	2-Wire Voice Grade Port (Centrex from diff Serving Wire Center)2,3 Basic Local Area			UEP95	UEPYM	2.15	90.38	57.27	48.66	8.77						
	2-Wire Voice Grade Port, Diff Serving Wire Center 2,3 - 800 Service Term - Basic Local Area			UEP95	UEPYZ	2.15	90.38	57.27	48.66	8.77						
	2-Wire Voice Grade Port terminated in on Megalink or equivalent - Basic Local Area			UEP95	UEPY9	2.15	40.19	19.83	24.91	6.63						
	2-Wire Voice Grade Port Terminated on 800 Service Term - Basic Local Area			UEP95	UEPY2	2.15	40.19	19.83	24.91	6.63						
	AL, KY, LA, MS, SC, & TN Only															
	2-Wire Voice Grade Port (Centrex)			UEP95	UEPQA	2.15	40.19	19.83	24.91	6.63						
	2-Wire Voice Grade Port (Centrex 800 termination)			UEP95	UEPQB	2.15	40.19	19.83	24.91	6.63						
	2-Wire Voice Grade Port (Centrex with Caller ID)1			UEP95	UEPQH	2.15	40.19	19.83	24.91	6.63						
	2-Wire Voice Grade Port (Centrex from diff Serving Wire Center)2,3			UEP95	UEPQM	2.15	90.38	57.27	48.66	8.77						
	2-Wire Voice Grade Port, Diff Serving Wire Center - 800 Service Term 2,3			UEP95	UEPQZ	2.15	90.38	57.27	48.66	8.77						
	2-Wire Voice Grade Port terminated in on Megalink or equivalent			UEP95	UEPQ9	2.15	40.19	19.83	24.91	6.63						
	2-Wire Voice Grade Port Terminated on 800 Service Term			UEP95	UEPQ2	2.15	40.19	19.83	24.91	6.63						
	Local Switching															
	Centrex Intercom Funtionality, per port			UEP95	URECS	0.5488										
	Features															
	All Standard Features Offered, per port			UEP95	UEPVF	1.98										
	All Select Features Offered, per port			UEP95	UEPVS	0.00	405.52									
	All Centrex Control Features Offered, per port			UEP95	UEPVC	1.98										
	NARS															
	Unbundled Network Access Register - Combination			UEP95	UARCX	0.00	0.00	0.00	0.00	0.00						
	Unbundled Network Access Register - Indial			UEP95	UAR1X	0.00	0.00	0.00	0.00	0.00						
	Unbundled Network Access Register - Outdial			UEP95	UAROX	0.00	0.00	0.00	0.00	0.00						
	Miscellaneous Terminations															
	2-Wire Trunk Side															
	Trunk Side Terminations, each			UEP95	CEND6	8.05	119.31	18.74	59.90	3.76						
	4-Wire Digital (1.544 Megabits)															
	DS1 Circuit Terminations, each			UEP95	M1HD1	60.09	202.02	95.69	72.59	2.46						
	DS0 Channels Activated, each			UEP95	M1HDO	0.00	14.48									

UNBUNDLED NETWORK ELEMENTS - Alabama

Attachment: 2 Ex. A

CATEGORY	RATE ELEMENTS	Interim	Zone	BCS	USOC	RATES ($) Rec	Nonrecurring First	Nonrecurring Add'l	Nonrecurring Disconnect First	Nonrecurring Disconnect Add'l	Svc Order Submitted Elec per LSR	Svc Order Submitted Manually per LSR	Incremental Charge - Manual Svc Order vs. Electronic- 1st	Incremental Charge - Manual Svc Order vs. Electronic- Add'l	Incremental Charge - Manual Svc Order vs. Electronic- Disc 1st	Incremental Charge - Manual Svc Order vs. Electronic- Disc Add'l
											OSS Rates ($)					
											SOMEC	SOMAN	SOMAN	SOMAN	SOMAN	SOMAN
Interoffice Channel Mileage - 2-Wire																
	Interoffice Channel Facilities Termination			UEP95	M1GBC	21.13	40.54	27.41	16.74	6.90						
	Interoffice Channel mileage, per mile or fraction of mile			UEP95	M1GBM	0.008838										
Feature Activations (DS0) Centrex Loops on Channelized DS1 Service																
D4 Channel Bank Feature Activations																
	Feature Activation on D-4 Channel Bank Centrex Loop Slot			UEP95	1PQWS	0.56										
	Feature Activation on D-4 Channel Bank FX line Side Loop Slot			UEP95	1PQW6	0.56										
	Feature Activation on D-4 Channel Bank FX Trunk Side Loop Slot			UEP95	1PQW7	0.56										
	Feature Activation on D-4 Channel Bank Centrex Loop Slot - Different Wire Center			UEP95	1PQWP	0.56										
	Feature Activation on D-4 Channel Bank Private Line Loop Slot			UEP95	1PQWV	0.56										
	Feature Activation on D-4 Channel Bank Tjie Line/Trunk Loop Slot			UEP95	1PQWQ	0.56										
	Feature Activation on D-4 Channel Bank WATS Loop Slot			UEP95	1PQWA	0.56										
Non-Recurring Charges (NRC) Associated with UNE-P Centrex																
	NRC Conversion Currently Combined Switch-As-Is with allowed changes, per port			UEP95	USAC2		0.10	0.10								
	Conversion of Existing Centrex Common Block, each			UEP95	USACN		37.75	16.58								
	New Centrex Standard Common Block			UEP95	M1ACS	0.00	667.21									
	New Centrex Customized Common Block			UEP95	M1ACC	0.00	667.21									
	NAR Establishment Charge, Per Occasion			UEP95	URECA	0.00	72.73									
Additional Non-Recurring Charges (NRC)																
	Unbundled Miscellaneous Rate Element, Tag Loop at End Use Premise			UEP95	URETL		8.33	0.83								
	Unbundled Miscellaneous Rate Element, Tag Design Loop at End Use Premise			UEP95	URETN		11.21	1.10								
UNE-P CENTREX - DMS100 (Valid in All States)																
2-Wire VG Loop/2-Wire Voice Grade Port (Centrex) Combo																
UNE Port/Loop Combination Rates (Non-Design)																
	2-Wire VG Loop/2-Wire Voice Grade Port (Centrex) Port Combo - Non-Design					13.70										
	2-Wire VG Loop/2-Wire Voice Grade Port (Centrex)Port Combo - Non-Design					22.19										
	2-Wire VG Loop/2-Wire Voice Grade Port (Centrex)Port Combo - Non-Design					35.80										
UNE Port/Loop Combination Rates (Design)																
	2-Wire VG Loop/2-Wire Voice Grade Port (Centrex) Port Combo - Design					16.53										
	2-Wire VG Loop/2-Wire Voice Grade Port (Centrex)Port Combo - Design					25.00										
	2-Wire VG Loop/2-Wire Voice Grade Port (Centrex)Port Combo - Design					38.29										
UNE Loop Rate																
	2-Wire Voice Grade Loop (SL 1) - Zone 1		1	UEP9D	UECS1	11.55										
	2-Wire Voice Grade Loop (SL 1) - Zone 2		2	UEP9D	UECS1	20.04										
	2-Wire Voice Grade Loop (SL 1) - Zone 3		3	UEP9D	UECS1	33.65										
	2-Wire Voice Grade Loop (SL 2) - Zone 1		1	UEP9D	UECS2	14.38										
	2-Wire Voice Grade Loop (SL 2) - Zone 2		2	UEP9D	UECS2	22.85										
	2-Wire Voice Grade Loop (SL 2) - Zone 3		3	UEP9D	UECS2	36.14										
UNE Port Rate																
ALL STATES																
	2-Wire Voice Grade Port (Centrex) Basic Local Area			UEP9D	UEPYA	2.15	40.19	19.83	24.91	6.63						
	2-Wire Voice Grade Port (Centrex 800 termination)Basic Local Area			UEP9D	UEPYB	2.15	40.19	19.83	24.91	6.63						
	2-Wire Voice Grade Port (Centrex / EBS-PSET)3Basic Local Area			UEP9D	UEPYC	2.15	40.19	19.83	24.91	6.63						
	2-Wire Voice Grade Port (Centrex / EBS-M5009)3Basic Local Area			UEP9D	UEPYD	2.15	40.19	19.83	24.91	6.63						
	2-Wire Voice Grade Port (Centrex / EBS-M5209))3 Basic Local Area			UEP9D	UEPYE	2.15	40.19	19.83	24.91	6.63						

CATEGORY		RATE ELEMENTS	Interim	Zone	BCS	USOC	RATES ($)					Svc Order Submitted Elec per LSR	Svc Order Submitted Manually per LSR	Incremental Charge - Manual Svc Order vs. Electronic-1st	Incremental Charge - Manual Svc Order vs. Electronic-Add'l	Incremental Charge - Manual Svc Order vs. Electronic-Disc 1st	Incremental Charge - Manual Svc Order vs. Electronic-Disc Add'l	
							Rec	Nonrecurring		Nonrecurring Disconnect		OSS Rates ($)						
								First	Add'l	First	Add'l	SOMEC	SOMAN	SOMAN	SOMAN	SOMAN	SOMAN	
		2-Wire Voice Grade Port (Centrex / EBS-M5112))3 Basic Local Area			UEP9D	UEPYF	2.15	40.19	19.83	24.91	6.63							
		2-Wire Voice Grade Port (Centrex / EBS-M5312))3Basic Local Area			UEP9D	UEPYG	2.15	40.19	19.83	24.91	6.63							
		2-Wire Voice Grade Port (Centrex / EBS-M5008))3 Basic Local Area			UEP9D	UEPYT	2.15	40.19	19.83	24.91	6.63							
		2-Wire Voice Grade Port (Centrex / EBS-M5208))3 Basic Local Area			UEP9D	UEPYU	2.15	40.19	19.83	24.91	6.63							
		2-Wire Voice Grade Port (Centrex / EBS-M5216))3 Basic Local Area			UEP9D	UEPYV	2.15	40.19	19.83	24.91	6.63							
		2-Wire Voice Grade Port (Centrex / EBS-M5316))3 Basic Local Area			UEP9D	UEPY3	2.15	40.19	19.83	24.91	6.63							
		2-Wire Voice Grade Port (Centrex with Caller ID) Basic Local Area			UEP9D	UEPYH	2.15	40.19	19.83	24.91	6.63							
		2-Wire Voice Grade Port (Centrex/Caller ID/Msg Wtg Lamp Indication))4 Basic Local Area			UEP9D	UEPYW	2.15	40.19	19.83	24.91	6.63							
		2-Wire Voice Grade Port (Centrex/Msg Wtg Lamp Indication))4 Basic Local Area			UEP9D	UEPYJ	2.15	40.19	19.83	24.91	6.63							
		2-Wire Voice Grade Port (Centrex from diff Serving Wire Center) 2,3-Basic Local Area			UEP9D	UEPYM	2.15	90.38	57.27	48.66	8.77							
		2-Wire Voice Grade Port (Centrex/differ SWC /EBS-PSET)2,3,4 Basic Local Area			UEP9D	UEPYO	2.15	90.38	57.27	48.66	8.77							
		2-Wire Voice Grade Port (Centrex/differ SWC /EBS-M5009)2,3,4 Basic Local Area			UEP9D	UEPYP	2.15	90.38	57.27	48.66	8.77							
		2-Wire Voice Grade Port (Centrex/differ SWC /EBS-5209)2,3,4 Basic Local Area			UEP9D	UEPYQ	2.15	90.38	57.27	48.66	8.77							
		2-Wire Voice Grade Port (Centrex/differ SWC /EBS-M5112)2,3,4 Basic Local Area			UEP9D	UEPYR	2.15	90.38	57.27	48.66	8.77							
		2-Wire Voice Grade Port (Centrex/differ SWC /EBS-M5312)2,3,4 Basic Local Area			UEP9D	UEPYS	2.15	90.38	57.27	48.66	8.77							
		2-Wire Voice Grade Port (Centrex/differ SWC /EBS-M5008)2,3,4 Basic Local Area			UEP9D	UEPY4	2.15	90.38	57.27	48.66	8.77							
		2-Wire Voice Grade Port (Centrex/differ SWC /EBS-M5208)2, 3 Basic Local Area			UEP9D	UEPY5	2.15	90.38	57.27	48.66	8.77							
		2-Wire Voice Grade Port (Centrex/differ SWC /EBS-M5216)2,3,4 Basic Local Area			UEP9D	UEPY6	2.15	90.38	57.27	48.66	8.77							
		2-Wire Voice Grade Port (Centrex/differ SWC /EBS-M5316)2,3,4 Basic Local Area			UEP9D	UEPY7	2.15	90.38	57.27	48.66	8.77							
		2-Wire Voice Grade Port, Diff Serving Wire Center - 800 Service Term 2,3			UEP9D	UEPYZ	2.15	90.38	57.27	48.66	8.77							
		2-Wire Voice Grade Port terminated in on Megalink or equivalent Basic Local Area			UEP9D	UEPY9	2.15	40.19	19.83	24.91	6.63							
		2-Wire Voice Grade Port Terminated on 800 Service Term Basic Local Area			UEP9D	UEPY2	2.15	40.19	19.83	24.91	6.63							
	AL, KY, LA, MS, SC, & TN Only																	
		2-Wire Voice Grade Port (Centrex)			UEP9D	UEPQA	2.15	40.19	19.83	24.91	6.63							
		2-Wire Voice Grade Port (Centrex 800 termination)			UEP9D	UEPQB	2.15	40.19	19.83	24.91	6.63							
		2-Wire Voice Grade Port (Centrex / EBS-PSET)4			UEP9D	UEPQC	2.15	40.19	19.83	24.91	6.63							
		2-Wire Voice Grade Port (Centrex / EBS-M5009)4			UEP9D	UEPQD	2.15	40.19	19.83	24.91	6.63							
		2-Wire Voice Grade Port (Centrex / EBS-M5209)4			UEP9D	UEPQE	2.15	40.19	19.83	24.91	6.63							
		2-Wire Voice Grade Port (Centrex / EBS-M5112)4			UEP9D	UEPQF	2.15	40.19	19.83	24.91	6.63							
		2-Wire Voice Grade Port (Centrex / EBS-M5312)4			UEP9D	UEPQG	2.15	40.19	19.83	24.91	6.63							
		2-Wire Voice Grade Port (Centrex / EBS-M5008)4			UEP9D	UEPQT	2.15	40.19	19.83	24.91	6.63							
		2-Wire Voice Grade Port (Centrex / EBS-M5208)4			UEP9D	UEPQU	2.15	40.19	19.83	24.91	6.63							
		2-Wire Voice Grade Port (Centrex / EBS-M5216)4			UEP9D	UEPQV	2.15	40.19	19.83	24.91	6.63							
		2-Wire Voice Grade Port (Centrex / EBS-M5316)4			UEP9D	UEPQ3	2.15	40.19	19.83	24.91	6.63							
		2-Wire Voice Grade Port (Centrex with Caller ID)			UEP9D	UEPQH	2.15	40.19	19.83	24.91	6.63							
		2-Wire Voice Grade Port (Centrex/Caller ID/Msg Wtg Lamp Indication)4			UEP9D	UEPQW	2.15	40.19	19.83	24.91	6.63							
		2-Wire Voice Grade Port (Centrex/Msg Wtg Lamp Indication)4			UEP9D	UEPQJ	2.15	40.19	19.83	24.91	6.63							
		2-Wire Voice Grade Port (Centrex from diff Serving Wire Center) 2,3			UEP9D	UEPQM	2.15	90.38	57.27	48.66	8.77							
		2-Wire Voice Grade Port (Centrex/differ SWC /EBS-PSET)2,3,4			UEP9D	UEPQO	2.15	90.38	57.27	48.66	8.77							

UNBUNDLED NETWORK ELEMENTS - Alabama

Attachment: 2 Ex. A

CATEGORY	RATE ELEMENTS	Interim	Zone	BCS	USOC	RATES ($)					Svc Order Submitted Elec per LSR	Svc Order Submitted Manually per LSR	Incremental Charge - Manual Svc Order vs. Electronic-1st	Incremental Charge - Manual Svc Order vs. Electronic-Add'l	Incremental Charge - Manual Svc Order vs. Electronic-Disc 1st	Incremental Charge - Manual Svc Order vs. Electronic-Disc Add'l
						Rec	Nonrecurring		Nonrecurring Disconnect		OSS Rates ($)					
							First	Add'l	First	Add'l	SOMEC	SOMAN	SOMAN	SOMAN	SOMAN	SOMAN
	2-Wire Voice Grade Port (Centrex/differ SWC /EBS-M5009)2,3,4			UEP9D	UEPQP	2.15	90.38	57.27	48.66	8.77						
	2-Wire Voice Grade Port (Centrex/differ SWC /EBS-5209)2,3,4			UEP9D	UEPQQ	2.15	90.38	57.27	48.66	8.77						
	2-Wire Voice Grade Port (Centrex/differ SWC /EBS-M5112)2,3,4			UEP9D	UEPQR	2.15	90.38	57.27	48.66	8.77						
	2-Wire Voice Grade Port (Centrex/differ SWC /EBS-M5312)2,3,4			UEP9D	UEPQS	2.15	90.38	57.27	48.66	8.77						
	2-Wire Voice Grade Port (Centrex/differ SWC /EBS-M5008)2,3,4			UEP9D	UEPQ4	2.15	90.38	57.27	48.66	8.77						
	2-Wire Voice Grade Port (Centrex/differ SWC /EBS-M5208)2,3,4			UEP9D	UEPQ5	2.15	90.38	57.27	48.66	8.77						
	2-Wire Voice Grade Port (Centrex/differ SWC /EBS-M5216)2,3,4			UEP9D	UEPQ6	2.15	90.38	57.27	48.66	8.77						
	2-Wire Voice Grade Port (Centrex/differ SWC /EBS-M5316)2,3,4			UEP9D	UEPQ7	2.15	90.38	57.27	48.66	8.77						
	2-Wire Voice Grade Port, Diff Serving Wire Center - 800 Service Term 2,3			UEP9D	UEPQZ	2.15	90.38	57.27	48.66	8.77						
	2-Wire Voice Grade Port terminated in on Megalink or equivalent			UEP9D	UEPQ9	2.15	40.19	19.83	24.91	6.63						
	2-Wire Voice Grade Port Terminated on 800 Service Term			UEP9D	UEPQ2	2.15	40.19	19.83	24.91	6.63						
Local Switching																
	Centrex Intercom Funtionality, per port			UEP9D	URECS	0.5488										
Features																
	All Standard Features Offered, per port			UEP9D	UEPVF	1.98										
	All Select Features Offered, per port			UEP9D	UEPVS	0.00	405.52									
	All Centrex Control Features Offered, per port			UEP9D	UEPVC	1.98										
NARS																
	Unbundled Network Access Register - Combination			UEP9D	UARCX	0.00	0.00	0.00	0.00	0.00						
	Unbundled Network Access Register - Inward			UEP9D	UAR1X	0.00	0.00	0.00	0.00	0.00						
	Unbundled Network Access Register - Outdial			UEP9D	UAROX	0.00	0.00	0.00	0.00	0.00						
Miscellaneous Terminations																
2-Wire Trunk Side																
	Trunk Side Terminations, each			UEP9D	CEND6	8.05	119.31	18.74	59.90	3.76						
4-Wire Digital (1.544 Megabits)																
	DS1 Circuit Terminations, each			UEP9D	M1HD1	60.09	202.02	95.69	72.59	2.46						
	DS0 Channels Activiated per Channel			UEP9D	M1HDO	0.00	14.48									
Interoffice Channel Mileage - 2-Wire																
	Interoffice Channel Facilities Termination			UEP9D	M1GBC	21.13	40.54	27.41	16.74	6.90						
	Interoffice Channel mileage, per mile or fraction of mile			UEP9D	M1GBM	0.008838										
Feature Activations (DS0) Centrex Loops on Channelized DS1 Service																
D4 Channel Bank Feature Activations																
	Feature Activation on D-4 Channel Bank Centrex Loop Slot			UEP9D	1PQWS	0.56										
	Feature Activation on D-4 Channel Bank FX line Side Loop Slot			UEP9D	1PQW6	0.56										
	Feature Activation on D-4 Channel Bank FX Trunk Side Loop Slot			UEP9D	1PQW7	0.56										
	Feature Activation on D-4 Channel Bank Centrex Loop Slot - Different Wire Center			UEP9D	1PQWP	0.56										
	Feature Activation on D-4 Channel Bank Private Line Loop Slot			UEP9D	1PQWV	0.56										
	Feature Activation on D-4 Channel Bank Tjie Line/Trunk Loop Slot			UEP9D	1PQWQ	0.56										
	Feature Activation on D-4 Channel Bank WATS Loop Slot			UEP9D	1PQWA	0.56										
Non-Recurring Charges (NRC) Associated with UNE-P Centrex																
	NRC Conversion Currently Combined Switch-As-Is with allowed changes, per port			UEP9D	USAC2		0.10	0.10								
	Conversion of existing Centrex Common Block, each			UEP9D	USACN		37.75	16.58								
	New Centrex Standard Common Block			UEP9D	M1ACS	0.00	667.21									
	New Centrex Customized Common Block			UEP9D	M1ACC	0.00	667.21									
	NAR Establishment Charge, Per Occasion			UEP9D	URECA	0.00	72.73									
Additional Non-Recurring Charges (NRC)																
	Unbundled Miscellaneous Rate Element, Tag Loop at End Use Premise			UEP9D	URETL		8.33	0.83								

UNBUNDLED NETWORK ELEMENTS - Alabama

Attachment: 2 Ex. A

CATEGORY	RATE ELEMENTS	Interim	Zone	BCS	USOC	RATES ($)					Svc Order Submitted Elec per LSR	Svc Order Submitted Manually per LSR	Incremental Charge - Manual Svc Order vs. Electronic-1st	Incremental Charge - Manual Svc Order vs. Electronic-Add'l	Incremental Charge - Manual Svc Order vs. Electronic-Disc 1st	Incremental Charge - Manual Svc Order vs. Electronic-Disc Add'l
						Rec	Nonrecurring		Nonrecurring Disconnect		OSS Rates ($)					
							First	Add'l	First	Add'l	SOMEC	SOMAN	SOMAN	SOMAN	SOMAN	SOMAN
	Unbundled Miscellaneous Rate Element, Tag Design Loop at End Use Premise			UEP9D	URETN		11.21	1.10								
	UNE-P CENTREX - EWSD (Valid in AL, FL, KY, LA, MS & TN)															
	2-Wire VG Loop/2-Wire Voice Grade Port (Centrex) Combo															
	UNE Port/Loop Combination Rates (Non-Design)															
	2-Wire VG Loop/2-Wire Voice Grade Port (Centrex) Port Combo - Non-Design					13.70										
	2-Wire VG Loop/2-Wire Voice Grade Port (Centrex)Port Combo - Non-Design					22.19										
	2-Wire VG Loop/2-Wire Voice Grade Port (Centrex)Port Combo - Non-Design					35.80										
	UNE Port/Loop Combination Rates (Design)															
	2-Wire VG Loop/2-Wire Voice Grade Port (Centrex) Port Combo - Design					16.53										
	2-Wire VG Loop/2-Wire Voice Grade Port (Centrex)Port Combo - Design					25.00										
	2-Wire VG Loop/2-Wire Voice Grade Port (Centrex)Port Combo - Design					38.29										
	UNE Loop Rate															
	2-Wire Voice Grade Loop (SL 1) - Zone 1		1	UEP9E	UECS1	11.55										
	2-Wire Voice Grade Loop (SL 1) - Zone 2		2	UEP9E	UECS1	20.04										
	2-Wire Voice Grade Loop (SL 1) - Zone 3		3	UEP9E	UECS1	33.65										
	2-Wire Voice Grade Loop (SL 2) - Zone 1		1	UEP9E	UECS2	14.38										
	2-Wire Voice Grade Loop (SL 2) - Zone 2		2	UEP9E	UECS2	22.85										
	2-Wire Voice Grade Loop (SL 2) - Zone 3		3	UEP9E	UECS2	36.14										
	UNE Port Rate															
	AL, FL, KY, LA, MS, & TN only															
	2-Wire Voice Grade Port (Centrex) Basic Local Area			UEP9E	UEPYA	2.15	40.19	19.83	24.91	6.63						
	2-Wire Voice Grade Port (Centrex 800 termination)Basic Local Area			UEP9E	UEPYB	2.15	40.19	19.83	24.91	6.63						
	2-Wire Voice Grade Port (Centrex with Caller ID)1Basic Local Area			UEP9E	UEPYH	2.15	40.19	19.83	24.91	6.63						
	2-Wire Voice Grade Port (Centrex from diff Serving Wire Center)2,3 Basic Local Area			UEP9E	UEPYM	2.15	90.38	57.27	48.66	8.77						
	2-Wire Voice Grade Port, Diff Serving Wire Center 2,3 - 800 Service Term - Basic Local Area			UEP9E	UEPYZ	2.15	90.38	57.27	48.66	8.77						
	2-Wire Voice Grade Port terminated in on Megalink or equivalent - Basic Local Area			UEP9E	UEPY9	2.15	40.19	19.83	24.91	6.63						
	2-Wire Voice Grade Port Terminated on 800 Service Term - Basic Local Area			UEP9E	UEPY2	2.15	40.19	19.83	24.91	6.63						
	AL, KY, LA, MS, & TN Only															
	2-Wire Voice Grade Port (Centrex)			UEP9E	UEPQA	2.15	40.19	19.83	24.91	6.63						
	2-Wire Voice Grade Port (Centrex 800 termination)			UEP9E	UEPQB	2.15	40.19	19.83	24.91	6.63						
	2-Wire Voice Grade Port (Centrex with Caller ID)1			UEP9E	UEPQH	2.15	40.19	19.83	24.91	6.63						
	2-Wire Voice Grade Port (Centrex from diff Serving Wire Center)2,3			UEP9E	UEPQM	2.15	90.38	57.27	48.66	8.77						
	2-Wire Voice Grade Port, Diff Serving Wire Center 2,3 - 800 Service Term			UEP9E	UEPQZ	2.15	90.38	57.27	48.66	8.77						
	2-Wire Voice Grade Port terminated in on Megalink or equivalent			UEP9E	UEPQ9	2.15	40.19	19.83	24.91	6.63						
	2-Wire Voice Grade Port Terminated on 800 Service Term			UEP9E	UEPQ2	2.15	40.19	19.83	24.91	6.63						
	Local Switching															
	Centrex Intercom Funtionality, per port			UEP9E	URECS	0.5488										
	Features															
	All Standard Features Offered, per port			UEP9E	UEPVF	1.98										
	All Select Features Offered, per port			UEP9E	UEPVS	0.00	405.52									
	All Centrex Control Features Offered, per port			UEP9E	UEPVC	1.98										
	NARS															
	Unbundled Network Access Register - Combination			UEP9E	UARCX	0.00	0.00	0.00	0.00	0.00						
	Unbundled Network Access Register - Indial			UEP9E	UAR1X	0.00	0.00	0.00	0.00	0.00						
	Unbundled Network Access Register - Outdial			UEP9E	UAROX	0.00	0.00	0.00	0.00	0.00						
	Miscellaneous Terminations															
	2-Wire Trunk Side															
	Trunk Side Terminations, each			UEP9E	CEND6	8.05	119.31	18.74	59.90	3.76						

UNBUNDLED NETWORK ELEMENTS - Alabama

Attachment: 2 Ex. A

CATEGORY	RATE ELEMENTS	Interim	Zone	BCS	USOC	RATES ($) Rec	Nonrecurring First	Nonrecurring Add'l	Nonrecurring Disconnect First	Nonrecurring Disconnect Add'l	Svc Order Submitted Elec per LSR	Svc Order Submitted Manually per LSR	Incremental Charge - Manual Svc Order vs. Electronic-1st	Incremental Charge - Manual Svc Order vs. Electronic-Add'l	Incremental Charge - Manual Svc Order vs. Electronic-Disc 1st	Incremental Charge - Manual Svc Order vs. Electronic-Disc Add'l
											OSS Rates ($)					
											SOMEC	SOMAN	SOMAN	SOMAN	SOMAN	SOMAN
4-Wire Digital (1.544 Megabits)																
	DS1 Circuit Terminations, each			UEP9E	M1HD1	60.09	202.02	95.69	72.59	2.46						
	DS0 Channel Activated Per Channel			UEP9E	M1HDO	0.00	14.48									
Interoffice Channel Mileage - 2-Wire																
	Interoffice Channel Facilities Termination			UEP9E	M1GBC	21.13	40.54	27.41	16.74	6.90						
	Interoffice Channel mileage, per mile or fraction of mile			UEP9E	M1GBM	0.008838										
Feature Activations (DS0) Centrex Loops on Channelized DS1 Service																
D4 Channel Bank Feature Activations																
	Feature Activation on D-4 Channel Bank Centrex Loop Slot			UEP9E	1PQWS	0.56										
	Feature Activation on D-4 Channel Bank FX line Side Loop Slot			UEP9E	1PQW6	0.56										
	Feature Activation on D-4 Channel Bank FX Trunk Side Loop Slot			UEP9E	1PQW7	0.56										
	Feature Activation on D-4 Channel Bank Centrex Loop Slot - Different Wire Center			UEP9E	1PQWP	0.56										
	Feature Activation on D-4 Channel Bank Private Line Loop Slot			UEP9E	1PQWV	0.56										
	Feature Activation on D-4 Channel Bank Tjie Line/Trunk Loop Slot			UEP9E	1PQWQ	0.56										
	Feature Activation on D-4 Channel Bank WATS Loop Slot			UEP9E	1PQWA	0.56										
Non-Recurring Charges (NRC) Associated with UNE-P Centrex																
	NRC Conversion Currently Combined Switch-As-Is with allowed changes, per port			UEP9E	USAC2		0.10	0.10								
	Conversion of Existing Centrex Common Block, each			UEP9E	USACN		37.75	16.58								
	New Centrex Standard Common Block			UEP9E	M1ACS	0.00	667.21									
	New Centrex Customized Common Block			UEP9E	M1ACC	0.00	667.21									
	NAR Establishment Charge, Per Occasion			UEP9E	URECA	0.00	72.73									
Additional Non-Recurring Charges (NRC)																
	Unbundled Miscellaneous Rate Element, Tag Loop at End Use Premise			UEP9E	URETL		8.33	0.83								
	Unbundled Miscellaneous Rate Element, Tag Design Loop at End Use Premise			UEP9E	URETN		11.21	1.10								
UNE-P CENTREX - DCO - Valid in AL, KY, LA, MS, & TN)																
2-Wire VG Loop/2-Wire Voice Grade Port (Centrex) Combo																
UNE Port/Loop Combination Rates (Non-Design)																
	2-Wire VG Loop/2-Wire Voice Grade Port (Centrex) Port Combo - Non-Design					13.70										
	2-Wire VG Loop/2-Wire Voice Grade Port (Centrex)Port Combo - Non-Design					22.19										
	2-Wire VG Loop/2-Wire Voice Grade Port (Centrex)Port Combo - Non-Design					35.80										
UNE Port/Loop Combination Rates (Design)																
	2-Wire VG Loop/2-Wire Voice Grade Port (Centrex) Port Combo - Design					16.53										
	2-Wire VG Loop/2-Wire Voice Grade Port (Centrex)Port Combo - Design					25.00										
	2-Wire VG Loop/2-Wire Voice Grade Port (Centrex)Port Combo - Design					38.29										
UNE Loop Rate																
	2-Wire Voice Grade Loop (SL 1) - Zone 1		1	UEP93	UECS1	11.55										
	2-Wire Voice Grade Loop (SL 1) - Zone 2		2	UEP93	UECS1	20.04										
	2-Wire Voice Grade Loop (SL 1) - Zone 3		3	UEP93	UECS1	33.65										
	2-Wire Voice Grade Loop (SL 2) - Zone 1		1	UEP93	UECS2	14.38										
	2-Wire Voice Grade Loop (SL 2) - Zone 2		2	UEP93	UECS2	22.85										
	2-Wire Voice Grade Loop (SL 2) - Zone 3		3	UEP93	UECS2	36.14										
UNE Port Rate																
AL, KY, LA, MS, & TN only																
	2-Wire Voice Grade Port (Centrex) Basic Local Area			UEP93	UEPYA	2.15	40.19	19.83	24.91	6.63						
	2-Wire Voice Grade Port (Centrex 800 termination)Basic Local Area			UEP93	UEPYB	2.15	40.19	19.83	24.91	6.63						
	2-Wire Voice Grade Port (Centrex with Caller ID)1Basic Local Area			UEP93	UEPYH	2.15	40.19	19.83	24.91	6.63						
	2-Wire Voice Grade Port (Centrex from diff Serving Wire Center)2,3 Basic Local Area			UEP93	UEPYM	2.15	90.38	57.27	48.66	8.77						

CATEGORY	RATE ELEMENTS	Interim	Zone	BCS	USOC	RATES ($)					Svc Order Submitted Elec per LSR	Svc Order Submitted Manually per LSR	Incremental Charge - Manual Svc Order vs. Electronic-1st	Incremental Charge - Manual Svc Order vs. Electronic-Add'l	Incremental Charge - Manual Svc Order vs. Electronic-Disc 1st	Incremental Charge - Manual Svc Order vs. Electronic-Disc Add'l
						Rec	Nonrecurring		Nonrecurring Disconnect		OSS Rates ($)					
							First	Add'l	First	Add'l	SOMEC	SOMAN	SOMAN	SOMAN	SOMAN	SOMAN
	2-Wire Voice Grade Port, Diff Serving Wire Center - 2,3 - 800 Service Term - Basic Local Area			UEP93	UEPYZ	2.15	90.38	57.27	48.66	8.77						
	2-Wire Voice Grade Port terminated in on Megalink or equivalent - Basic Local Area			UEP93	UEPY9	2.15	40.19	19.83	24.91	6.63						
	2-Wire Voice Grade Port Terminated on 800 Service Term - Basic Local Area			UEP93	UEPY2	2.15	40.19	19.83	24.91	6.63						
	2-Wire Voice Grade Port (Centrex)			UEP93	UEPQA	2.15	40.19	19.83	24.91	6.63						
	2-Wire Voice Grade Port (Centrex 800 termination)			UEP93	UEPQB	2.15	40.19	19.83	24.91	6.63						
	2-Wire Voice Grade Port (Centrex with Caller ID)1			UEP93	UEPQH	2.15	40.19	19.83	24.91	6.63						
	2-Wire Voice Grade Port (Centrex from diff Serving Wire Center)2,3			UEP93	UEPQM	2.15	90.38	57.27	48.66	8.77						
	2-Wire Voice Grade Port, Diff Serving Wire Center - 2,3 -800 Service Term			UEP93	UEPQZ	2.15	90.38	57.27	48.66	8.77						
	2-Wire Voice Grade Port terminated in on Megalink or equivalent			UEP93	UEPQ9	2.15	40.19	19.83	24.91	6.63						
	2-Wire Voice Grade Port Terminated on 800 Service Term			UEP93	UEPQ2	2.15	40.19	19.83	24.91	6.63						
Local Switching																
	Centrex Intercom Funtionality, per port			UEP93	URECS	0.5488										
Features																
	All Standard Features Offered, per port			UEP93	UEPVF	1.98										
	All Centrex Control Features Offered, per port			UEP93	UEPVC	1.98										
NARS																
	Unbundled Network Access Register - Combination			UEP93	UARCX	0.00	0.00	0.00	0.00	0.00						
	Unbundled Network Access Register - Indial			UEP93	UAR1X	0.00	0.00	0.00	0.00	0.00						
	Unbundled Network Access Register - Outdial			UEP93	UAROX	0.00	0.00	0.00	0.00	0.00						
Miscellaneous Terminations																
2-Wire Trunk Side																
	Trunk Side Terminations, each			UEP93	CEND6	8.05	119.31	18.74	59.90	3.76						
4-Wire Digital (1.544 Megabits)																
	DS1 Circuit Terminations, each			UEP93	M1HD1	60.09	202.02	95.69	72.59	2.46						
	DS0 Channels Activated, Per Channel			UEP93	M1HDO	0.00	14.48									
Interoffice Channel Mileage - 2-Wire																
	Interoffice Channel Facilities Termination			UEP93	M1GBC	21.13	40.54	27.41	16.74	6.90						
	Interoffice Channel mileage, per mile or fraction of mile			UEP93	M1GBM	0.008838										
Feature Activations (DS0) Centrex Loops on Channelized DS1 Service																
D4 Channel Bank Feature Activations																
	Feature Activation on D-4 Channel Bank Centrex Loop Slot			UEP93	1PQWS	0.56										
	Feature Activation on D-4 Channel Bank FX Line Side Loop Slot			UEP93	1PQW6	0.56										
	Feature Activation on D-4 Channel Bank FX Trunk Side Loop Slot			UEP93	1PQW7	0.56										
	Feature Activation on D-4 Channel Bank Centrex Loop Slot - Different Wire Center			UEP93	1PQWP	0.56										
	Feature Activation on D-4 Channel Bank Private Line Loop Slot			UEP93	1PQWV	0.56										
	Feature Activation on D-4 Channel Bank Tie Line/Trunk Loop Slot			UEP93	1PQWQ	0.56										
	Feature Activation on D-4 Channel Bank WATS Loop Slot			UEP93	1PQWA	0.56										
Non-Recurring Charges (NRC) Associated with UNE-P Centrex																
	NRC Conversion Currently Combined Switch-As-Is with allowed changes, per port			UEP93	USAC2		0.10	0.10								
	Conversion of Existing Centrex Common Block, each			UEP93	USACN		37.75	16.58								
	New Centrex Standard Common Block			UEP93	M1ACS	0.00	667.21									
	New Centrex Customized Common Block			UEP93	M1ACC	0.00	667.21									
	NAR Establishment Charge, Per Occasion			UEP93	URECA	0.00	72.73									
Additional Non-Recurring Charges (NRC)																
	Unbundled Miscellaneous Rate Element, Tag Loop at End Use Premise			UEP93	URETL		8.33	0.83								
	Unbundled Miscellaneous Rate Element, Tag Design Loop at End Use Premise			UEP93	URETN		11.21	1.10								
Note 1 - Required Port for Centrex Control in 1AESS, 5ESS & EWSD																
Note 2 - Requres Interoffice Channel Mileage																
Note 3 - Installation is combination of Installation charge for SL2 Loop and Port																
Note 4 - Requires Specific Customer Premises Equipment																

UNBUNDLED NETWORK ELEMENTS - Alabama														Attachment: 2 Ex. A				
CATEGORY		RATE ELEMENTS	Interim	Zone	BCS	USOC	RATES ($)					Svc Order Submitted Elec per LSR	Svc Order Submitted Manually per LSR	Incremental Charge - Manual Svc Order vs. Electronic-1st	Incremental Charge - Manual Svc Order vs. Electronic-Add'l	Incremental Charge - Manual Svc Order vs. Electronic-Disc 1st	Incremental Charge - Manual Svc Order vs. Electronic-Disc Add'l	
							Rec	Nonrecurring		Nonrecurring Disconnect		OSS Rates ($)						
								First	Add'l	First	Add'l	SOMEC	SOMAN	SOMAN	SOMAN	SOMAN	SOMAN	
	Note: Rates displaying an "I" in Interim column are interim as a result of a Commission order.																	

UNBUNDLED NETWORK ELEMENTS - Florida

Attachment: 2 Ex. A

CATEGORY	RATE ELEMENTS	Interim	Zone	BCS	USOC	RATES ($)					Svc Order Submitted Elec per LSR	Svc Order Submitted Manually per LSR	Incremental Charge - Manual Svc Order vs. Electronic-1st	Incremental Charge - Manual Svc Order vs. Electronic-Add'l	Incremental Charge - Manual Svc Order vs. Electronic-Disc 1st	Incremental Charge - Manual Svc Order vs. Electronic-Disc Add'l
						Rec	Nonrecurring		Nonrecurring Disconnect		OSS Rates ($)					
							First	Add'l	First	Add'l	SOMEC	SOMAN	SOMAN	SOMAN	SOMAN	SOMAN
The "Zone" shown in the sections for stand-alone loops or loops as part of a combination refers to Geographically Deaveraged UNE Zones. To view Geographically Deaveraged UNE Zone Designations by Central Office, refer to internet Website: http://www.interconnection.bellsouth.com/become_a_clec/html/interconnection.htm																
OPERATIONAL SUPPORT SYSTEMS (OSS) - "REGIONAL RATES"																
NOTE: (1) CLEC should contact its contract negotiator if it prefers the "state specific" OSS charges as ordered by the State Commissions. The OSS charges currently contained in this rate exhibit are the BellSouth "regional" service ordering charges. CLEC may elect either the state specific Commission ordered rates for the service ordering charges, or CLEC may elect the regional service ordering charge, however, CLEC can not obtain a mixture of the two regardless if CLEC has a interconnection contract established in each of the 9 states.																
NOTE: (2) Any element that can be ordered electronically will be billed according to the SOMEC rate listed in this category. Please refer to BellSouth's Local Ordering Handbook (LOH) to determine if a product can be ordered electronically. For those elements that cannot be ordered electronically at present per the LOH, the listed SOMEC rate in this category reflects the charge that would be billed to a CLEC once electronic ordering capabilities come on-line for that element. Otherwise, the manual ordering charge, SOMAN, will be applied to a CLECs bill when it submits an LSR to BellSouth.																
	OSS - Electronic Service Order Charge, Per Local Service Request (LSR) - UNE Only				SOMEC		3.50	0.00	3.50	0.00						
	OSS - Manual Service Order Charge, Per Local Service Request (LSR) - UNE Only				SOMAN		11.90	0.00	1.83	0.00						
UNE SERVICE DATE ADVANCEMENT CHARGE																
NOTE: The Expedite charge will be maintained commensurate with BellSouth's FCC No.1 Tariff, Section 5 as applicable.																
	UNE Expedite Charge per Circuit or Line Assignable USOC, per Day			UAL, UEANL, UCL, UEF, UDF, UEQ, UDL, UENTW, UDN, UEA, UHL, ULC, USL, U1T12, U1T48, U1TD1, U1TD3, U1TDX, U1TO3, U1TS1, U1TVX, UC1BC, UC1BL, UC1CC, UC1CL, UC1DC, UC1DL, UC1EC, UC1EL, UC1FC, UC1FL, UC1GC, UC1GL, UC1HC, UC1HL, UDL12, UDL48, UDLO3, UDLSX, UE3, ULD12, ULD48, ULDD1, ULDD3, ULDDX, ULDO3, ULDS1, ULDVX, UNC1X, UNC3X, UNCDX, UNCNX, UNCSX, UNCVX, UNLD1, UNLD3, UXTD1, UXTD3, UXTS1, U1TUC, U1TUD, U1TUB, U1TUA	SDASP		200.00									
ORDER MODIFICATION CHARGE																
	Order Modification Charge (OMC)						26.21	0.00	0.00	0.00						
	Order Modification Additional Dispatch Charge (OMCAD)						150.00	0.00	0.00	0.00						
UNBUNDLED EXCHANGE ACCESS LOOP																
	2-WIRE ANALOG VOICE GRADE LOOP															
	2-Wire Analog Voice Grade Loop - Service Level 1- Zone 1		1	UEANL	UEAL2	10.69	49.57	22.83	25.62	6.57						
	2-Wire Analog Voice Grade Loop - Service Level 1- Zone 2		2	UEANL	UEAL2	15.20	49.57	22.83	25.62	6.57						
	2-Wire Analog Voice Grade Loop - Service Level 1- Zone 3		3	UEANL	UEAL2	26.97	49.57	22.83	25.62	6.57						
	2-Wire Analog Voice Grade Loop - Service Level 1- Zone 1		1	UEANL	UEASL	10.69	49.57	22.83	25.62	6.57						
	2-Wire Analog Voice Grade Loop - Service Level 1- Zone 2		2	UEANL	UEASL	15.20	49.57	22.83	25.62	6.57						
	2-Wire Analog Voice Grade Loop - Service Level 1- Zone 3		3	UEANL	UEASL	26.97	49.57	22.83	25.62	6.57						
	Unbundled Miscellaneous Rate Element, Tag Loop at End User Premise			UEANL	URETL		8.33	0.83								
	Loop Testing - Basic 1st Half Hour			UEANL	URET1		48.65	48.65								
	Loop Testing - Basic Additional Half Hour			UEANL	URETA		23.95	23.95								
	CLEC to CLEC Conversion Charge Without Outside Dispatch (UVL-SL1)			UEANL	UREWO		15.78	8.94								

CATEGORY	RATE ELEMENTS	Interim	Zone	BCS	USOC	RATES ($)					Svc Order Submitted Elec per LSR	Svc Order Submitted Manually per LSR	Incremental Charge - Manual Svc Order vs. Electronic-1st	Incremental Charge - Manual Svc Order vs. Electronic-Add'l	Incremental Charge - Manual Svc Order vs. Electronic-Disc 1st	Incremental Charge - Manual Svc Order vs. Electronic-Disc Add'l
						Rec	Nonrecurring		Nonrecurring Disconnect		OSS Rates ($)					
							First	Add'l	First	Add'l	SOMEC	SOMAN	SOMAN	SOMAN	SOMAN	SOMAN
	Unbundled Voice Loop, Non-Design Voice Loop, billing for BST providing make-up (Engineering Information - E.I.)			UEANL	UEANM		13.49									
	Manual Order Coordination for UVL-SL1s (per loop)			UEANL	UEAMC		9.00	9.00								
	Order Coordination for Specified Conversion Time for UVL-SL1 (per LSR)			UEANL	OCOSL		23.02									
2-WIRE Unbundled COPPER LOOP																
	2-Wire Unbundled Copper Loop - Non-Designed Zone 1		1	UEQ	UEQ2X	7.69	44.98	20.90	24.88	6.45						
	2 Wire Unbundled Copper Loop - Non-Designed - Zone 2		2	UEQ	UEQ2X	10.92	44.98	20.90	24.88	6.45						
	2 Wire Unbundled Copper Loop - Non-Designed - Zone 3		3	UEQ	UEQ2X	19.38	44.98	20.90	24.88	6.45						
	Unbundled Miscellaneous Rate Element, Tag Loop at End User Premise			UEQ	URETL		8.33	0.83								
	Manual Order Coordination 2 Wire Unbundled Copper Loop - Non-Designed (per loop)			UEQ	USBMC		9.00									
	Unbundled Copper Loop, Non-Design Cooper Loop, billing for BST providing make-up (Engineering Information - E.I.)			UEQ	UEQMU		13.49									
	Loop Testing - Basic 1st Half Hour			UEQ	URET1		48.65	48.65								
	Loop Testing - Basic Additional Half Hour			UEQ	URETA		23.95	23.95								
	CLEC to CLEC Conversion Charge Without Outside Dispatch (UCL-ND)			UEQ	UREWO		14.27	7.43								
UNBUNDLED EXCHANGE ACCESS LOOP																
2-WIRE ANALOG VOICE GRADE LOOP																
	2 Wire Analog Voice Grade Loop-Service Level 1-Line Splitting-Zone 1		1	UEPSR UEPSB	UEALS	10.69	49.57	22.83	25.62	6.57						
	2 Wire Analog Voice Grade Loop-Service Level 1-Line Splitting-Zone 1		1	UEPSR UEPSB	UEABS	10.69	49.57	22.83	25.62	6.57						
	2 Wire Analog Voice Grade Loop- Service Level 1-Line Splitting-Zone 2		2	UEPSR UEPSB	UEALS	15.20	49.57	22.83	25.62	6.57						
	2 Wire Analog Voice Grade Loop- Service Level 1-Line Splitting-Zone 2		2	UEPSR UEPSB	UEABS	15.20	49.57	22.83	25.62	6.57						
	2 Wire Analog Voice Grade Loop-Service Level 1-Line Splitting-Zone 3		3	UEPSR UEPSB	UEALS	26.97	49.57	22.83	25.62	6.57						
	2 Wire Analog Voice Grade Loop-Service Level 1-Line Splitting-Zone 3		3	UEPSR UEPSB	UEABS	26.97	49.57	22.83	25.62	6.57						
UNBUNDLED EXCHANGE ACCESS LOOP																
2-WIRE ANALOG VOICE GRADE LOOP																
	2-Wire Analog Voice Grade Loop - Service Level 2 w/Loop or Ground Start Signaling - Zone 1		1	UEA	UEAL2	12.24	135.75	82.47	63.53	12.01						
	2-Wire Analog Voice Grade Loop - Service Level 2 w/Loop or Ground Start Signaling - Zone 2		2	UEA	UEAL2	17.40	135.75	82.47	63.53	12.01						
	2-Wire Analog Voice Grade Loop - Service Level 2 w/Loop or Ground Start Signaling - Zone 3		3	UEA	UEAL2	30.87	135.75	82.47	63.53	12.01						
	Order Coordination for Specified Conversion Time (per LSR)			UEA	OCOSL		23.02									
	2-Wire Analog Voice Grade Loop - Service Level 2 w/Reverse Battery Signaling - Zone 1		1	UEA	UEAR2	12.24	135.75	82.47	63.53	12.01						
	2-Wire Analog Voice Grade Loop - Service Level 2 w/Reverse Battery Signaling - Zone 2		2	UEA	UEAR2	17.40	135.75	82.47	63.53	12.01						
	2-Wire Analog Voice Grade Loop - Service Level 2 w/Reverse Battery Signaling - Zone 3		3	UEA	UEAR2	30.87	135.75	82.47	63.53	12.01						
	Order Coordination for Specified Conversion Time (per LSR)			UEA	OCOSL		23.02									
	CLEC to CLEC Conversion Charge without outside dispatch			UEA	UREWO		87.71	36.35								
	Loop Tagging - Service Level 2 (SL2)			UEA	URETL		11.21	1.10								
4-WIRE ANALOG VOICE GRADE LOOP																
	4-Wire Analog Voice Grade Loop - Zone 1		1	UEA	UEAL4	18.89	167.86	115.15	67.08	15.56						
	4-Wire Analog Voice Grade Loop - Zone 2		2	UEA	UEAL4	26.84	167.86	115.15	67.08	15.56						
	4-Wire Analog Voice Grade Loop - Zone 3		3	UEA	UEAL4	47.62	167.86	115.15	67.08	15.56						
	Order Coordination for Specified Conversion Time (per LSR)			UEA	OCOSL		23.02									
	CLEC to CLEC Conversion Charge without outside dispatch			UEA	UREWO		87.71	36.35								
2-WIRE ISDN DIGITAL GRADE LOOP																
	2-Wire ISDN Digital Grade Loop - Zone 1		1	UDN	U1L2X	19.28	147.69	94.41	62.23	10.71						
	2-Wire ISDN Digital Grade Loop - Zone 2		2	UDN	U1L2X	27.40	147.69	94.41	62.23	10.71						
	2-Wire ISDN Digital Grade Loop - Zone 3		3	UDN	U1L2X	48.62	147.69	94.41	62.23	10.71						
	Order Coordination For Specified Conversion Time (per LSR)			UDN	OCOSL		23.02									
	CLEC to CLEC Conversion Charge without outside dispatch			UDN	UREWO		91.61	44.15								
2-WIRE ASYMMETRICAL DIGITAL SUBSCRIBER LINE (ADSL) COMPATIBLE LOOP																

UNBUNDLED NETWORK ELEMENTS - Florida

Attachment: 2 Ex. A

CATEGORY	RATE ELEMENTS	Interim	Zone	BCS	USOC	RATES ($)					Svc Order Submitted Elec per LSR	Svc Order Submitted Manually per LSR	Incremental Charge - Manual Svc Order vs. Electronic-1st	Incremental Charge - Manual Svc Order vs. Electronic-Add'l	Incremental Charge - Manual Svc Order vs. Electronic-Disc 1st	Incremental Charge - Manual Svc Order vs. Electronic-Disc Add'l
						Rec	Nonrecurring		Nonrecurring Disconnect		OSS Rates ($)					
							First	Add'l	First	Add'l	SOMEC	SOMAN	SOMAN	SOMAN	SOMAN	SOMAN
	2 Wire Unbundled ADSL Loop including manual service inquiry & facility reservation - Zone 1		1	UAL	UAL2X	8.30	149.53	103.85	75.05	15.63						
	2 Wire Unbundled ADSL Loop including manual service inquiry & facility reservation - Zone 2		2	UAL	UAL2X	11.80	149.53	103.85	75.05	15.63						
	2 Wire Unbundled ADSL Loop including manual service inquiry & facility reservation - Zone 3		3	UAL	UAL2X	20.94	149.53	103.85	75.05	15.63						
	Order Coordination for Specified Conversion Time (per LSR)			UAL	OCOSL		23.02									
	2 Wire Unbundled ADSL Loop without manual service inquiry & facility reservaton - Zone 1		1	UAL	UAL2W	8.30	124.83	71.12	60.64	9.12						
	2 Wire Unbundled ADSL Loop without manual service inquiry & facility reservaton - Zone 2		2	UAL	UAL2W	11.80	124.83	71.12	60.64	9.12						
	2 Wire Unbundled ADSL Loop without manual service inquiry & facility reservaton - Zone 3		3	UAL	UAL2W	20.94	124.83	71.12	60.64	9.12						
	Order Coordination for Specified Conversion Time (per LSR)			UAL	OCOSL		23.02									
	CLEC to CLEC Conversion Charge without outside dispatch			UAL	UREWO		86.19	40.39								
2-WIRE HIGH BIT RATE DIGITAL SUBSCRIBER LINE (HDSL) COMPATIBLE LOOP																
	2 Wire Unbundled HDSL Loop including manual service inquiry & facility reservation - Zone 1		1	UHL	UHL2X	7.22	159.09	113.41	75.05	15.63						
	2 Wire Unbundled HDSL Loop including manual service inquiry & facility reservation - Zone 2		2	UHL	UHL2X	10.26	159.09	113.41	75.05	15.63						
	2 Wire Unbundled HDSL Loop including manual service inquiry & facility reservation - Zone 3		3	UHL	UHL2X	18.21	159.09	113.41	75.05	15.63						
	Order Coordination for Specified Conversion Time (per LSR)			UHL	OCOSL		23.02									
	2 Wire Unbundled HDSL Loop without manual service inquiry and facility reservation - Zone 1		1	UHL	UHL2W	7.22	134.40	80.69	60.64	9.12						
	2 Wire Unbundled HDSL Loop without manual service inquiry and facility reservation - Zone 2		2	UHL	UHL2W	10.26	134.40	80.69	60.64	9.12						
	2 Wire Unbundled HDSL Loop without manual service inquiry and facility reservation - Zone 3		3	UHL	UHL2W	18.21	134.40	80.69	60.64	9.12						
	Order Coordination for Specified Conversion Time (per LSR)			UHL	OCOSL		23.02									
	CLEC to CLEC Conversion Charge without outside dispatch			UHL	UREWO		86.12	40.39								
4-WIRE HIGH BIT RATE DIGITAL SUBSCRIBER LINE (HDSL) COMPATIBLE LOOP																
	4 Wire Unbundled HDSL Loop including manual service inquiry and facility reservation - Zone 1		1	UHL	UHL4X	10.86	193.31	138.98	77.15	12.61						
	4-Wire Unbundled HDSL Loop including manual service inquiry and facility reservation - Zone 2		2	UHL	UHL4X	15.44	193.31	138.98	77.15	12.61						
	4-Wire Unbundled HDSL Loop including manual service inquiry and facility reservation - Zone 3		3	UHL	UHL4X	27.39	193.31	138.98	77.15	12.61						
	Order Coordination for Specified Conversion Time (per LSR)			UHL	OCOSL		23.02									
	4-Wire Unbundled HDSL Loop without manual service inquiry and facility reservation - Zone 1		1	UHL	UHL4W	10.86	168.62	115.47	62.74	11.22						
	4-Wire Unbundled HDSL Loop without manual service inquiry and facility reservation - Zone 2		2	UHL	UHL4W	15.44	168.62	115.47	62.74	11.22						
	4-Wire Unbundled HDSL Loop without manual service inquiry and facility reservation - Zone 3		3	UHL	UHL4W	27.39	168.62	115.47	62.74	11.22						
	Order Coordination for Specified Conversion Time (per LSR)			UHL	OCOSL		23.02									
	CLEC to CLEC Conversion Charge without outside dispatch			UHL	UREWO		86.12	40.39								
4-WIRE DS1 DIGITAL LOOP																
	4-Wire DS1 Digital Loop - Zone 1		1	USL	USLXX	70.74	313.75	181.48	61.22	13.53						
	4-Wire DS1 Digital Loop - Zone 2		2	USL	USLXX	100.54	313.75	181.48	61.22	13.53						
	4-Wire DS1 Digital Loop - Zone 3		3	USL	USLXX	178.39	313.75	181.48	61.22	13.53						
	Order Coordination for Specified Conversion Time (per LSR)			USL	OCOSL		23.02									
	CLEC to CLEC Conversion Charge without outside dispatch			USL	UREWO		101.07	43.04								
4-WIRE 19.2, 56 OR 64 KBPS DIGITAL GRADE LOOP																
	4 Wire Unbundled Digital 19.2 Kbps		1	UDL	UDL19	22.20	161.56	108.85	67.08	15.56						
	4 Wire Unbundled Digital 19.2 Kbps		2	UDL	UDL19	31.56	161.56	108.85	67.08	15.56						
	4 Wire Unbundled Digital 19.2 Kbps		3	UDL	UDL19	55.99	161.56	108.85	67.08	15.56						
	4 Wire Unbundled Digital Loop 56 Kbps - Zone 1		1	UDL	UDL56	22.20	161.56	108.85	67.08	15.56						
	4 Wire Unbundled Digital Loop 56 Kbps - Zone 2		2	UDL	UDL56	31.56	161.56	108.85	67.08	15.56						
	4 Wire Unbundled Digital Loop 56 Kbps - Zone 3		3	UDL	UDL56	55.99	161.56	108.85	67.08	15.56						
	Order Coordination for Specified Conversion Time (per LSR)			UDL	OCOSL		23.02									
	4 Wire Unbundled Digital Loop 64 Kbps - Zone 1		1	UDL	UDL64	22.20	161.56	108.85	67.08	15.56						
	4 Wire Unbundled Digital Loop 64 Kbps - Zone 2		2	UDL	UDL64	31.56	161.56	108.85	67.08	15.56						
	4 Wire Unbundled Digital Loop 64 Kbps - Zone 3		3	UDL	UDL64	55.99	161.56	108.85	67.08	15.56						

CATEGORY	RATE ELEMENTS	Interim	Zone	BCS	USOC	RATES ($)					Svc Order Submitted Elec per LSR	Svc Order Submitted Manually per LSR	Incremental Charge - Manual Svc Order vs. Electronic-1st	Incremental Charge - Manual Svc Order vs. Electronic-Add'l	Incremental Charge - Manual Svc Order vs. Electronic-Disc 1st	Incremental Charge - Manual Svc Order vs. Electronic-Disc Add'l
						Rec	Nonrecurring		Nonrecurring Disconnect		OSS Rates ($)					
							First	Add'l	First	Add'l	SOMEC	SOMAN	SOMAN	SOMAN	SOMAN	SOMAN
	Order Coordination for Specified Conversion Time (per LSR)			UDL	OCOSL		23.02									
	CLEC to CLEC Conversion Charge without outside dispatch			UDL	UREWO		102.11	49.74								
2-WIRE Unbundled COPPER LOOP																
	2-Wire Unbundled Copper Loop-Designed including manual service inquiry & facility reservation - Zone 1		1	UCL	UCLPB	8.30	148.50	102.82	75.05	15.63						
	2-Wire Unbundled Copper Loop-Designed including manual service inquiry & facility reservation - Zone 2		2	UCL	UCLPB	11.80	148.50	102.82	75.05	15.63						
	2 Wire Unbundled Copper Loop-Designed including manual service inquiry & facility reservation - Zone 3		3	UCL	UCLPB	20.94	148.50	102.82	75.05	15.63						
	Order Coordination for Unbundled Copper Loops (per loop)			UCL	UCLMC		9.00	9.00								
	2-Wire Unbundled Copper Loop-Designed without manual service inquiry and facility reservation - Zone 1		1	UCL	UCLPW	8.30	123.81	70.09	60.64	9.12						
	2-Wire Unbundled Copper Loop-Designed without manual service inquiry and facility reservation - Zone 2		2	UCL	UCLPW	11.80	123.81	70.09	60.64	9.12						
	2-Wire Unbundled Copper Loop-Designed without manual service inquiry and facility reservation - Zone 3		3	UCL	UCLPW	20.94	123.81	70.09	60.64	9.12						
	Order Coordination for Unbundled Copper Loops (per loop)			UCL	UCLMC		9.00	9.00								
	CLEC to CLEC Conversion Charge without outside dispatch (UCL -Des)			UCL	UREWO		97.21	42.47								
4-WIRE COPPER LOOP																
	4-Wire Copper Loop-Designed including manual service inquiry and facility reservation - Zone 1		1	UCL	UCL4S	11.83	177.87	132.76	77.15	17.73						
	4-Wire Copper Loop-Designed including manual service inquiry and facility reservation - Zone 2		2	UCL	UCL4S	16.81	177.87	132.76	77.15	17.73						
	4-Wire Copper Loop-Designed including manual service inquiry and facility reservation - Zone 3		3	UCL	UCL4S	29.82	177.87	132.76	77.15	17.73						
	Order Coordination for Unbundled Copper Loops (per loop)			UCL	UCLMC		9.00	9.00								
	4-Wire Copper Loop-Designed without manual service inquiry and facility reservation - Zone 1		1	UCL	UCL4W	11.83	153.18	100.03	62.74	11.22						
	4-Wire Copper Loop-Designed without manual service inquiry and facility reservation - Zone 2		2	UCL	UCL4W	16.81	153.18	100.03	62.74	11.22						
	4-Wire Copper Loop-Designed without manual service inquiry and facility reservation - Zone 3		3	UCL	UCL4W	29.82	153.18	100.03	62.74	11.22						
	Order Coordination for Unbundled Copper Loops (per loop)			UCL	UCLMC		9.00	9.00								
	CLEC to CLEC Conversion Charge without outside dispatch			UCL	UREWO		97.21	42.47								
LOOP MODIFICATION																
	Unbundled Loop Modification, Removal of Load Coils - 2 Wire pair less than or equal to 18k ft, per Unbundled Loop			UAL, UHL, UCL, UEQ, ULS, UEA, UEANL, UEPSR, UEPSB	ULM2L		0.00	0.00								
	Unbundled Loop Modification Removal of Load Coils - 4 Wire less than or equal to 18K ft, per Unbundled Loop			UHL, UCL, UEA	ULM4L		0.00	0.00								
	Unbundled Loop Modification Removal of Bridged Tap Removal, per unbundled loop			UAL, UHL, UCL, UEQ, ULS, UEA, UEANL, UEPSR, UEPSB	ULMBT		10.52	10.52								
SUB-LOOPS																
Sub-Loop Distribution																
	Sub-Loop - Per Cross Box Location - CLEC Feeder Facility Set-Up	I		UEANL	USBSA		487.23									
	Sub-Loop - Per Cross Box Location - Per 25 Pair Panel Set-Up	I		UEANL	USBSB		6.25									
	Sub-Loop - Per Building Equipment Room - CLEC Feeder Facility Set-Up	I		UEANL	USBSC		169.25									
	Sub-Loop - Per Building Equipment Room - Per 25 Pair Panel Set-Up	I		UEANL	USBSD		38.65									
	Sub-Loop Distribution Per 2-Wire Analog Voice Grade Loop - Zone 1		1	UEANL	USBN2	6.46	60.19	21.78	47.50	5.26						
	Sub-Loop Distribution Per 2-Wire Analog Voice Grade Loop - Zone 2		2	UEANL	USBN2	9.18	60.19	21.78	47.50	5.26						
	Sub-Loop Distribution Per 2-Wire Analog Voice Grade Loop - Zone 3		3	UEANL	USBN2	16.29	60.19	21.78	47.50	5.26						
	Order Coordination for Unbundled Sub-Loops, per sub-loop pair			UEANL	USBMC		9.00	9.00								

CATEGORY	RATE ELEMENTS	Interim	Zone	BCS	USOC	RATES ($)					Svc Order Submitted Elec per LSR	Svc Order Submitted Manually per LSR	Incremental Charge - Manual Svc Order vs. Electronic-1st	Incremental Charge - Manual Svc Order vs. Electronic-Add'l	Incremental Charge - Manual Svc Order vs. Electronic-Disc 1st	Incremental Charge - Manual Svc Order vs. Electronic-Disc Add'l
						Rec	Nonrecurring		Nonrecurring Disconnect		OSS Rates ($)					
							First	Add'l	First	Add'l	SOMEC	SOMAN	SOMAN	SOMAN	SOMAN	SOMAN
	Sub-Loop Distribution Per 4-Wire Analog Voice Grade Loop - Zone 1		1	UEANL	USBN4	7.37	68.83	30.42	49.71	6.60						
	Sub-Loop Distribution Per 4-Wire Analog Voice Grade Loop - Zone 2		2	UEANL	USBN4	10.47	68.83	30.42	49.71	6.60						
	Sub-Loop Distribution Per 4-Wire Analog Voice Grade Loop - Zone 3		3	UEANL	USBN4	18.58	68.83	30.42	49.71	6.60						
	Order Coordination for Unbundled Sub-Loops, per sub-loop pair			UEANL	USBMC		9.00	9.00								
	Sub-Loop 2-Wire Intrabuilding Network Cable (INC)	I		UEANL	USBR2	3.96	51.84	13.44	47.50	5.26						
	Order Coordination for Unbundled Sub-Loops, per sub-loop pair			UEANL	USBMC		9.00	9.00								
	Sub-Loop 4-Wire Intrabuilding Network Cable (INC)	I		UEANL	USBR4	9.37	55.91	17.51	49.71	6.60						
	Order Coordination for Unbundled Sub-Loops, per sub-loop pair			UEANL	USBMC		9.00	9.00								
	Loop Testing - Basic 1st Half Hour			UEANL	URET1		48.65	48.65								
	Loop Testing - Basic Additional Half Hour			UEANL	URETA		23.95	23.95								
	2 Wire Copper Unbundled Sub-Loop Distribution - Zone 1	I	1	UEF	UCS2X	5.15	60.19	21.78	47.50	5.26						
	2 Wire Copper Unbundled Sub-Loop Distribution - Zone 2	I	2	UEF	UCS2X	7.31	60.19	21.78	47.50	5.26						
	2 Wire Copper Unbundled Sub-Loop Distribution - Zone 3	I	3	UEF	UCS2X	12.98	60.19	21.78	47.50	5.26						
	Order Coordination for Unbundled Sub-Loops, per sub-loop pair			UEF	USBMC		9.00	9.00								
	4 Wire Copper Unbundled Sub-Loop Distribution - Zone 1	I	1	UEF	UCS4X	5.36	68.83	30.42	49.71	6.60						
	4 Wire Copper Unbundled Sub-Loop Distribution - Zone 2	I	2	UEF	UCS4X	7.61	68.83	30.42	49.71	6.60						
	4 Wire Copper Unbundled Sub-Loop Distribution - Zone 3	I	3	UEF	UCS4X	13.51	68.83	30.42	49.71	6.60						
	Order Coordination for Unbundled Sub-Loops, per sub-loop pair			UEF	USBMC		9.00	9.00								
	Loop Testing - Basic 1st Half Hour			UEF	URET1		48.65	48.65								
	Loop Testing - Basic Additional Half Hour			UEF	URETA		23.95	23.95								
	Unbundled Network Terminating Wire (UNTW)															
	Unbundled Network Terminating Wire (UNTW) per Pair			UENTW	UENPP	0.4572	18.02									
	Network Interface Device (NID)															
	Network Interface Device (NID) - 1-2 lines			UENTW	UND12		71.49	48.87								
	Network Interface Device (NID) - 1-6 lines			UENTW	UND16		113.89	89.07								
	Network Interface Device Cross Connect - 2 W			UENTW	UNDC2		7.63	7.63								
	Network Interface Device Cross Connect - 4W			UENTW	UNDC4		7.63	7.63								
UNE OTHER, PROVISIONING ONLY - NO RATE																
	NID - Dispatch and Service Order for NID installation			UENTW	UNDBX	0.00	0.00									
	UNTW Circuit Id Establishment, Provisioning Only - No Rate			UENTW	UENCE	0.00	0.00									
	Unbundled Contract Name, Provisioning Only - No Rate			UEANL,UEF,UEQ,UENTW	UNECN	0.00	0.00									
UNE OTHER, PROVISIONING ONLY - NO RATE																
	Unbundled Contact Name, Provisioning Only - no rate			UAL,UCL,UDC,UDL,UDN,UEA,UHL,USL	UNECN	0.00	0.00									
	Unbundled Sub-Loop Feeder-2 Wire Cross Box Jumper - no rate			UEA,UDN,UCL,UDC	USBFQ	0.00	0.00									
	Unbundled Sub-Loop Feeder-4 Wire Cross Box Jumper - no rate			UEA,USL,UCL,UDL	USBFR	0.00	0.00									
	Unbundled DS1 Loop - Superframe Format Option - no rate			USL	CCOSF	0.00	0.00									
	Unbundled DS1 Loop - Expanded Superframe Format option - no rate			USL	CCOEF	0.00	0.00									
HIGH CAPACITY UNBUNDLED LOCAL LOOP																
	High Capacity Unbundled Local Loop - DS3 - Per Mile per month			UE3	1L5ND	10.92										
	High Capacity Unbundled Local Loop - DS3 - Facility Termination per month			UE3	UE3PX	386.88	639.8255	394.4615	159.9995	111.366						
	High Capacity Unbundled Local Loop - STS-1 - Per Mile per month			UDLSX	1L5ND	10.92										
	High Capacity Unbundled Local Loop - STS-1 - Facility Termination per month			UDLSX	UDLS1	426.60	639.8255	394.4615	159.9995	111.366						
LOOP MAKE-UP																
	Loop Makeup - Preordering Without Reservation, per working or spare facility queried (Manual).			UMK	UMKLW		52.17	52.17								

CATEGORY		RATE ELEMENTS	Interim	Zone	BCS	USOC	RATES ($)					Svc Order Submitted Elec per LSR	Svc Order Submitted Manually per LSR	Incremental Charge - Manual Svc Order vs. Electronic-1st	Incremental Charge - Manual Svc Order vs. Electronic-Add'l	Incremental Charge - Manual Svc Order vs. Electronic-Disc 1st	Incremental Charge - Manual Svc Order vs. Electronic-Disc Add'l
							Rec	Nonrecurring		Nonrecurring Disconnect		OSS Rates ($)					
								First	Add'l	First	Add'l	SOMEC	SOMAN	SOMAN	SOMAN	SOMAN	SOMAN
		Loop Makeup - Preordering With Reservation, per spare facility queried (Manual).			UMK	UMKLP		55.07	55.07								
		Loop Makeup--With or Without Reservation, per working or spare facility queried (Mechanized)			UMK	UMKMQ		0.6784	0.6784								
LINE SPLITTING																	
	LINE SPLITTING																
	END USER ORDERING-CENTRAL OFFICE BASED																
		Line Splitting - per line activation DLEC owned splitter			UEPSR UEPSB	UREOS	0.61										
		Line Splitting - per line activation BST owned - physical			UEPSR UEPSB	UREBP	0.61	29.68	21.28	19.57	9.61						
		Line Splitting - per line activation BST owned - virtual			UEPSR UEPSB	UREBV	1.134	29.68	21.28	19.57	9.61						
MAINTENANCE OF SERVICE																	
	NOTE: The Expedite charge will be maintained commensurate with BellSouth's FCC No.1 Tariff, Section 13.3.1 as applicable.																
		No Trouble Found - per 1/2 hour increments - Basic						80.00	55.00								
		No Trouble Found - per 1/2 hour increments - Overtime						90.00	65.00								
		No Trouble Found - per 1/2 hour increments - Premium						100.00	75.00								
UNBUNDLED DEDICATED TRANSPORT																	
	INTEROFFICE CHANNEL - DEDICATED TRANSPORT																
		Interoffice Channel - Dedicated Transport - 2-Wire Voice Grade - Per Mile per month			U1TVX	1L5XX	0.0091										
		Interoffice Channel - Dedicated Transport- 2- Wire Voice Grade - Facility Termination			U1TVX	U1TV2	25.32	47.35	31.78	18.31	7.03						
		Interoffice Channel - Dedicated Transpor t- 2-Wire Voice Grade Rev Bat. - Per Mile per month			U1TVX	1L5XX	0.0091										
		Interoffice Channel - Dedicated Transport- 2- Wire VG Rev Bat. - Facility Termination			U1TVX	U1TR2	25.32	47.35	31.78	18.31	7.03						
		Interoffice Channel - Dedicated Transport - 4-Wire Voice Grade - Per Mile per month			U1TVX	1L5XX	0.0091										
		Interoffice Channel - Dedicated Transport - 4- Wire Voice Grade - Facility Termination			U1TVX	U1TV4	22.58	47.35	31.78	18.31	7.03						
		Interoffice Channel - Dedicated Transport - 56 kbps - per mile per month			U1TDX	1L5XX	0.0091										
		Interoffice Channel - Dedicated Transport - 56 kbps - Facility Termination			U1TDX	U1TD5	18.44	47.35	31.78	18.31	7.03						
		Interoffice Channel - Dedicated Transport - 64 kbps - per mile per month			U1TDX	1L5XX	0.0091										
		Interoffice Channel - Dedicated Transport - 64 kbps - Facility Termination			U1TDX	U1TD6	18.44	47.35	31.78	18.31	7.03						
		Interoffice Channel - Dedicated Channel - DS1 - Per Mile per month			U1TD1	1L5XX	0.1856										
		Interoffice Channel - Dedicated Tranport - DS1 - Facility Termination			U1TD1	U1TF1	88.44	105.54	98.47	21.47	19.05						
		Interoffice Channel - Dedicated Transport - DS3 - Per Mile per month			U1TD3	1L5XX	3.87										
		Interoffice Channel - Dedicated Transport - DS3 - Facility Termination per month			U1TD3	U1TF3	1,071.00	335.46	219.28	72.03	70.56						
		Interoffice Channel - Dedicated Transport - STS-1 - Per Mile per month			U1TS1	1L5XX	3.87										
		Interoffice Channel - Dedicated Transport - STS-1 - Facility Termination			U1TS1	U1TFS	1,056.00	335.46	219.28	72.03	70.56						
DARK FIBER																	
		Dark Fiber, Four Fiber Strands, Per Route Mile or Fraction Thereof per month - Local Channel			UDF, UDFCX	1L5DC	53.87										
		Dark Fiber, Four Fiber Strands, Per Route Mile or Fraction Thereof per month - Interoffice Channel			UDF, UDFCX	1L5DF	26.85										
		NRC Dark Fiber - Interoffice Channel			UDF, UDFCX	UDF14		751.34	193.88	356.21	230.11						
		Dark Fiber, Four Fiber Strands, Per Route Mile or Fraction Thereof per month - Local Loop			UDF, UDFCX	1L5DL	53.87										
8XX ACCESS TEN DIGIT SCREENING																	
		8XX Access Ten Digit Screening, Per Call					0.0006252										
		8XX Access Ten Digit Screening, w/ 8FL No. Delivery, per query					0.0006252										
		8XX Access Ten Digit Screening, w/ POTS No. Delivery, per query					0.0006252										
LINE INFORMATION DATA BASE ACCESS (LIDB)																	

UNBUNDLED NETWORK ELEMENTS - Florida

Attachment: 2 Ex. A

CATEGORY	RATE ELEMENTS	Interim	Zone	BCS	USOC	RATES ($)					Svc Order Submitted Elec per LSR	Svc Order Submitted Manually per LSR	Incremental Charge - Manual Svc Order vs. Electronic-1st	Incremental Charge - Manual Svc Order vs. Electronic-Add'l	Incremental Charge - Manual Svc Order vs. Electronic-Disc 1st	Incremental Charge - Manual Svc Order vs. Electronic-Disc Add'l
						Rec	Nonrecurring		Nonrecurring Disconnect		OSS Rates ($)					
							First	Add'l	First	Add'l	SOMEC	SOMAN	SOMAN	SOMAN	SOMAN	SOMAN
	LIDB Common Transport Per Query					0.0000203										
	LIDB Validation Per Query					0.0136959										
	LIDB Originating Point Code Establishment or Change			OQU	NRBPX		55.13	55.13	55.13	55.13						
CALLING NAME (CNAM) SERVICE																
	CNAM for DB Owners, Per Query					0.001024										
	CNAM for Non DB Owners, Per Query					0.001024										
LNP Query Service																
	LNP Charge Per query					0.000852										
	LNP Service Establishment Manual						13.83	13.83	12.71	12.71						
	LNP Service Provisioning with Point Code Establishment						655.50	334.88	297.03	218.40						
SELECTIVE ROUTING																
	Selective Routing Per Unique Line Class Code Per Request Per Switch						93.55	93.55	12.71	12.71						
VIRTUAL COLLOCATION																
	Virtual Collocation-2 Wire Cross Connects (Loop) for Line Splitting			UEPSR UEPSB	VE1LS	0.0502	11.57	11.57	0.00	0.00						
PHYSICAL COLLOCATION																
	Physical Collocation-2 Wire Cross Connects (Loop) for Line Splitting			UEPSR UEPSB	PE1LS	0.0276	8.22	7.22	5.74	4.58						
AIN SELECTIVE CARRIER ROUTING																
	Regional Service Establishment						193,444.00		7,737.00							
	End Office Establishment						187.36	187.36	0.69	0.69						
	Query NRC, per query					0.0031868										
AIN - BELLSOUTH AIN SMS ACCESS SERVICE																
	AIN SMS Access Service - Service Establishment, Per State, Initial Setup			A1N	CAMSE		43.56	43.56	44.93	44.93						
	AIN SMS Access Service - Port Connection - Dial/Shared Access			A1N	CAMDP		8.64	8.64	10.03	10.03						
	AIN SMS Access Service - Port Connection - ISDN Access			A1N	CAM1P		8.64	8.64	10.03	10.03						
	AIN SMS Access Service - User Identification Codes - Per User ID Code			A1N	CAMAU		38.66	38.66	29.88	29.88						
	AIN SMS Access Service - Security Card, Per User ID Code, Initial or Replacement			A1N	CAMRC		75.10	75.10	12.93	12.93						
	AIN SMS Access Service - Storage, Per Unit (100 Kilobytes)					0.0028										
	AIN SMS Access Service - Session, Per Minute					0.7809										
	AIN SMS Access Service - Company Performed Session, Per Minute					0.4609										
SIGNALING (CCS7)																
	CCS7 Signaling Usage, Per TCAP Message					0.0000607										
	CCS7 Signaling Usage, Per ISUP Message					0.0000152										
911 PBX LOCATE																
	911 PBX LOCATE DATABASE CAPABILITY															
	Service Establishment per CLEC per End User Account			9PBDC	9PBEU		1,820.00									
	Changes to TN Range or Customer Profile			9PBDC	9PBTN		182.14									
	Per Telephone Number (Monthly)			9PBDC	9PBMM	0.07										
	Change Company (Service Provider) ID			9PBDC	9PBPC		534.66									
	PBX Locate Service Support per CLEC (Monthlt)			9PBDC	9PBMR	178.80										
	Service Order Charge			9PBDC	9PBSC		11.90									
	911 PBX LOCATE TRANSPORT COMPONENT															
	See Att 3															
ENHANCED EXTENDED LINK (EELs)																
	NOTE: The monthly recurring and non-recurring charges below will apply and the Switch-As-Is Charge will not apply for UNE combinations provisioned as ' Ordinarily Combined' Network Elements.															
	NOTE: The monthly recurring and the Switch-As-Is Charge and not the non-recurring charges below will apply for UNE combinations provisioned as ' Currently Combined' Network Elements.															
	2-WIRE VOICE GRADE LOOP FOR USE IN A COMBINATION															
	2-Wire VG Loop (SL2) in Combination - Zone 1		1	UNCVX	UEAL2	12.24	127.59	60.54	42.79	2.81						
	2-Wire VG Loop (SL2) in Combination - Zone 2		2	UNCVX	UEAL2	17.40	127.59	60.54	42.79	2.81						
	2-Wire VG Loop (SL2) in Combination - Zone 3		3	UNCVX	UEAL2	30.87	127.59	60.54	42.79	2.81						
	Voice Grade COCI - Per Month			UNCVX	1D1VG	1.38	10.07	7.08								
	4-WIRE VOICE GRADE LOOP FOR USE IN A COMBINATION															
	4-Wire Analog Voice Grade Loop in Combination - Zone 1		1	UNCVX	UEAL4	18.89	127.59	60.54	42.79	2.81						
	4-Wire Analog Voice Grade Loop in Combination - Zone 2		2	UNCVX	UEAL4	26.84	127.59	60.54	42.79	2.81						
	4-Wire Analog Voice Grade Loop in Combination - Zone 3		3	UNCVX	UEAL4	47.62	127.59	60.54	42.79	2.81						
	Voice Grade COCI in combination - per month			UNCVX	1D1VG	1.38	10.07	7.08								
	4-WIRE 56 KBPS DIGITAL LOOP FOR USE IN A COMBINATION															

UNBUNDLED NETWORK ELEMENTS - Florida

Attachment: 2 Ex. A

CATEGORY	RATE ELEMENTS	Interim	Zone	BCS	USOC	RATES ($)					Svc Order Submitted Elec per LSR	Svc Order Submitted Manually per LSR	Incremental Charge - Manual Svc Order vs. Electronic-1st	Incremental Charge - Manual Svc Order vs. Electronic-Add'l	Incremental Charge - Manual Svc Order vs. Electronic-Disc 1st	Incremental Charge - Manual Svc Order vs. Electronic-Disc Add'l
						Rec	Nonrecurring		Nonrecurring Disconnect		OSS Rates ($)					
							First	Add'l	First	Add'l	SOMEC	SOMAN	SOMAN	SOMAN	SOMAN	SOMAN
	4-Wire 56Kbps Digital Grade Loop in Combination - Zone 1		1	UNCDX	UDL56	22.20	127.59	60.54	42.79	2.81						
	4-Wire 56Kbps Digital Grade Loop in Combination - Zone 2		2	UNCDX	UDL56	31.56	127.59	60.54	42.79	2.81						
	4-Wire 56Kbps Digital Grade Loop in Combination - Zone 3		3	UNCDX	UDL56	55.99	127.59	60.54	42.79	2.81						
	OCU-DP COCI (data) per month (2.4-64kbs)			UNCDX	1D1DD	2.10	10.07	7.08								
	4-WIRE 64 KBPS DIGITAL LOOP FOR USE IN A COMBINATI\ON															
	4-Wire 64Kbps Digital Grade Loop in Combination - Zone 1		1	UNCDX	UDL64	22.20	127.59	60.54	42.79	2.81						
	4-Wire 64Kbps Digital Grade Loop in Combination - Zone 2		2	UNCDX	UDL64	31.56	127.59	60.54	42.79	2.81						
	4-Wire 64Kbps Digital Grade Loop in Combination - Zone 3		3	UNCDX	UDL64	55.99	127.59	60.54	42.79	2.81						
	OCU-DP COCI (data) - in combination - per month (2.4-64kbs)			UNCDX	1D1DD	2.10	10.07	7.08								
	2-WIRE ISDN LOOP FOR USE IN COMBINATION															
	2-Wire ISDN Loop in Combination - Zone 1		1	UNCNX	U1L2X	19.28	127.59	60.60	42.79	2.81						
	2-Wire ISDN Loop in Combination - Zone 2		2	UNCNX	U1L2X	27.40	127.59	60.60	42.79	2.81						
	2-Wire ISDN Loop in Combination - Zone 3		3	UNCNX	U1L2X	48.62	127.59	60.60	42.79	2.81						
	2-wire ISDN COCI (BRITE) - in combination - per month			UNCNX	UC1CA	3.66	10.07	7.08								
	4-WIRE DS1 DIGITAL LOOP FOR USE IN A COMBINATION															
	4-Wire DS1 Digital Loop in Combination - Zone 1		1	UNC1X	USLXX	70.74	217.75	121.62	51.44	14.45						
	4-Wire DS1 Digital Loop in Combination - Zone 2		2	UNC1X	USLXX	100.54	217.75	121.62	51.44	14.45						
	4-Wire DS1 Digital Loop in Combination - Zone 3		3	UNC1X	USLXX	178.39	217.75	121.62	51.44	14.45						
	DS1 COCI in combination per month			UNC1X	UC1D1	13.76	10.07	7.08								
	2 WIRE VOICE GRADE INTEROFFICE TRANSPORT FOR USE IN A COMBINATION															
	Interoffice Transport - 2-wire VG - Dedicated- Per Mile Per Month			UNCVX	1L5XX	0.0091										
	Interoffice Transport - 2-wire VG - Dedicated - Facility Termination per month			UNCVX	U1TV2	25.32	94.70	52.59	50.49	21.53						
	4 WIRE VOICE GRADE INTEROFFICE TRANSPORT FOR USE IN A COMBINATION															
	Interoffice Transport - 4-wire VG - Dedicated - Per Mile Per Month			UNCVX	1L5XX	0.0091										
	Interoffice Transport - 4-wire VG - Dedicated - Facility Termination per month			UNCVX	U1TV4	22.58	94.70	52.59	50.49	21.53						
	DS1 INTEROFFICE TRANSPORT FOR COMBINATION															
	Interoffice Transport - Dedicated - DS1 combination - Per Mile per month			UNC1X	1L5XX	0.1856										
	Interoffice Transport - Dedicated - DS1 combination - Facility Termination per month			UNC1X	U1TF1	88.44	174.46	122.46	45.61	17.95						
	DS3 INTEROFFICE TRANSPORT FOR USE IN A COMBINATION															
	Interoffice Transport - Dedicated - DS3 combination - Per Mile Per Month			UNC3X	1L5XX	3.87										
	Interoffice Transport - Dedicated - DS3 - Facility Termination per month			UNC3X	U1TF3	1,071.00	335.46	219.28	72.03	70.56						
	STS-1 INTEROFFICE TRANSPORT FOR USE IN COMBINATION															
	Interoffice Transport - Dedicated - STS-1 combination - Per Mile Per Month			UNCSX	1L5XX	3.87										
	Interoffice Transport - Dedicated - STS-1 combination - Facility Termination per month			UNCSX	U1TFS	1,056.00	314.45	130.88	38.60	18.23						
	4-WIRE 56 KBPS DIGITAL LOOP WITH 56 KBPS INTEROFFICE TRANSPORT															
	4-wire 56 kbps Local Loop in combination - Zone 1		1	UNCDX	UDL56	22.20	127.59	60.54	42.79	2.81						
	4-wire 56 kbps Local Loop in combination - Zone 2		2	UNCDX	UDL56	31.56	127.59	60.54	42.79	2.81						
	4-wire 56 kbps Local Loop in combination - Zone 3		3	UNCDX	UDL56	55.99	127.59	60.54	42.79	2.81						
	Interoffice Transport - Dedicated - 4-wire 56 kbps combination - Per Mile per month			UNCDX	1L5XX	0.0091										
	Interoffice Transport - Dedicated - 4-wire 56 kbps combination - Facility Termination per month			UNCDX	U1TD5	18.44	94.70	52.59	50.49	21.53						
	4-WIRE 64 KBPS DIGITAL EXTENDED LOOP WITH 64 KBPS INTEROFFICE TRANSPORT															
	4-wire 64 kbps Lcoal Loop in Combination - Zone 1		1	UNCDX	UDL64	22.20	127.59	60.54	42.79	2.81						
	4-wire 64 kbps Lcoal Loop in Combination - Zone 2		2	UNCDX	UDL64	31.56	127.59	60.54	42.79	2.81						
	4-wire 64 kbps Lcoal Loop in Combination - Zone 3		3	UNCDX	UDL64	55.99	127.59	60.54	42.79	2.81						
	Interoffice Transport - Dedicated - 4-wire 64 kbps combination - Per Mile per month			UNCDX	1L5XX	0.0091										
	Interoffice Transport - Dedicated - 4-wire 64 kbps combination - Facility Termination per month			UNCDX	U1TD6	18.44	94.70	52.59	50.49	21.53						
	4-WIRE 56 KBPS DIGITAL EXTENDED LOOP WITH DS0 INTEROFFICE TRANSPORT															
	4-wire 56 kbps Local Loop in combination - Zone 1		1	UNCDX	UDL56	22.20	127.59	60.54	42.79	2.81						
	4-wire 56 kbps Local Loop in combination - Zone 2		2	UNCDX	UDL56	31.56	127.59	60.54	42.79	2.81						
	4-wire 56 kbps Local Loop in combination - Zone 3		3	UNCDX	UDL56	55.99	127.59	60.54	42.79	2.81						

UNBUNDLED NETWORK ELEMENTS - Florida

Attachment: 2 Ex. A

CATEGORY	RATE ELEMENTS	Interim	Zone	BCS	USOC	RATES ($)					Svc Order Submitted Elec per LSR	Svc Order Submitted Manually per LSR	Incremental Charge - Manual Svc Order vs. Electronic-1st	Incremental Charge - Manual Svc Order vs. Electronic-Add'l	Incremental Charge - Manual Svc Order vs. Electronic-Disc 1st	Incremental Charge - Manual Svc Order vs. Electronic-Disc Add'l
						Rec	Nonrecurring		Nonrecurring Disconnect		OSS Rates ($)					
							First	Add'l	First	Add'l	SOMEC	SOMAN	SOMAN	SOMAN	SOMAN	SOMAN
	4-wiree 56 kbps Interoffice Transport - Dedicated - Per Mile per month			UNCDX	1L5XX	0.0091										
	4-wire 56 kbps Interoffice Transport - Dedicated - Facility Termination per month			UNCDX	U1TD5	18.44	94.70	52.59	50.49	21.53						
4-WIRE 64 KBPS DIGITAL EXTENDED LOOP WITH DS0 INTEROFFICE TRANSPORT																
	4-wire 64 kbps Local Loop in combination - Zone 1		1	UNCDX	UDL64	22.20	127.59	60.54	42.79	2.81						
	4-wire 64 kbps Local Loop in combination - Zone 2		2	UNCDX	UDL64	31.56	127.59	60.54	42.79	2.81						
	4-wire 64 kbps Local Loop in combination - Zone 3		3	UNCDX	UDL64	55.99	127.59	60.54	42.79	2.81						
	I4-wire 65 kbps Interoffice Transport - Dedicated - Per Mile per month			UNCDX	1L5XX	0.0091										
	4-wire 64 kbps Interoffice Transport - Dedicated - Facility Termination per month			UNCDX	U1TD6	18.44	94.70	52.59	50.49	21.53						
DS1 DIGITAL LOOP AND DS1 INTERFOFFICE TRANSPORT																
	4-Wire DS1 Digital Loop in Combination - Zone 1		1	UNC1X	USLXX	70.74	217.75	121.62	51.44	14.45						
	4-Wire DS1 Digital Loop in Combination - Zone 2		2	UNC1X	USLXX	100.54	217.75	121.62	51.44	14.45						
	4-Wire DS1 Digital Loop in Combination - Zone 3		3	UNC1X	USLXX	178.39	217.75	121.62	51.44	14.45						
	Interoffice Transport - Dedicated - DS1 combination - Per Mile per month			UNC1X	1L5XX	0.1856										
	Interoffice Transport - Dedicated - DS1 combination - Facility Termination per month			UNC1X	U1TF1	88.44	174.46	122.46	45.61	17.95						
DS3 DIGITAL LOOP WITH DEDICATED DS3 INTEROFFICE TRANSPORT																
	DS3 Local Loop in combination - per mile per month			UNC3X	1L5ND	12.558										
	DS3 Local Loop in combination - Facility Termination per month			UNC3X	UE3PX	444.912	639.8255	394.4615	159.9995	111.366						
	Interoffice Transport - Dedicated - DS3 - Per Mile per month			UNC3X	1L5XX	3.87										
	Interoffice Transport - Dedicated - DS3 combination - Facility Termination per month			UNC3X	U1TF3	1,071.00	335.46	219.28	72.03	70.56						
STS-1 DIGITAL LOOP WITH DEDICATED STS-1 INTEROFFICE TRANSPORT																
	STS-1 Local Lolp in combination - per mile per month			UNCSX	1L5ND	12.558										
	STS-1 Local Loop in combination - Facility Termination per month			UNCSX	UDLS1	490.59	639.8255	394.4615	159.9995	111.366						
	Interoffice Transport - Dedicated - STS-1 combination - per mile per month			UNCSX	1L5XX	3.87										
	Interoffice Transport - Dedicated - STS-1 combination - Facility Termination per month			UNCSX	U1TFS	1,056.00	314.45	130.88	38.60	18.23						
ADDITIONAL NETWORK ELEMENTS																
	When used as a part of a currently combined facility, the non-recurrng charges do not apply, but a Switch As Is charge does apply.															
	When used as ordinarily combined network elements in All States, the non-recurring charges apply and the Switch As Is Charge does not.															
	Commingling Authorization			UNCVX, UNCDX, UNC1X, UNC3X, UNCSX, U1TD1, U1TD3, U1TS1, UE3, UDLSX, U1TVX, U1TDX, U1TUB	CMGAU	0.00	0.00	0.00	0.00	0.00						
	Nonrecurring Currently Combined Network Elements "Switch As Is" Charge (One applies to each combination)															
	Nonrecurring Currently Combined Network Elements Switch -As-Is Charge - 2 wire/4-Wire VG			UNCVX, UNCDX, UNC1X, UNC3X, UNCSX	UNCCC		8.98	8.98	8.98	8.98						
	Optional Features & Functions:															
	Clear Channel Capability Extended Frame Option - per DS1	I		U1TD1, ULDD1,UNC1X	CCOEF		0.00	0.00	0.00	0.00						
	Clear Channel Capability Super FrameOption - per DS1	I		U1TD1, ULDD1,UNC1X	CCOSF		0.00	0.00	0.00	0.00						
	Clear Channel Capability (SF/ESF) Option - Subsequent Activity - per DS1	I		ULDD1, U1TD1, UNC1X, USL	NRCCC		184.92	23.82	2.07	0.80						
	C-bit Parity Option - Subsequent Activity - per DS3	i		U1TD3, ULDD3, UE3, UNC3X	NRCC3		219.09	7.67	0.773	0.00						
MULTIPLEXERS																
	DS1 to DS0 Channel System per month			UNC1X	MQ1	146.77	101.42	71.62								
	OCU-DP COCI (data) - DS1 to DS0 Channel System - per month (2.4-64kbs) used for a Local Loop			UDL	1D1DD	2.10	10.07	7.08								

UNBUNDLED NETWORK ELEMENTS - Florida

Attachment: 2 Ex. A

CATEGORY	RATE ELEMENTS	Interim	Zone	BCS	USOC	RATES ($)					Svc Order Submitted Elec per LSR	Svc Order Submitted Manually per LSR	Incremental Charge - Manual Svc Order vs. Electronic-1st	Incremental Charge - Manual Svc Order vs. Electronic-Add'l	Incremental Charge - Manual Svc Order vs. Electronic-Disc 1st	Incremental Charge - Manual Svc Order vs. Electronic-Disc Add'l
						Rec	Nonrecurring		Nonrecurring Disconnect		OSS Rates ($)					
							First	Add'l	First	Add'l	SOMEC	SOMAN	SOMAN	SOMAN	SOMAN	SOMAN
	OCU-DP COCI (data) - DS1 to DS0 Channel System - per month (2.4-64kbs) used for connection to a channelized DS1 Local Channel in the same SWC as collocation			U1TUD	1D1DD	2.10	10.07	7.08	0.00	0.00						
	2-wire ISDN COCI (BRITE) - DS1 to DS0 Channel Systsem - per month for a Local Loop			UDN	UC1CA	3.66	10.07	7.08								
	2-wire ISDN COCI (BRITE) - DS1 to DS0 Channel Systsem - per month used for connection to a channelized DS1 Local Channel in the same SWC as collocation			U1TUB	UC1CA	3.66	10.07	7.08	0.00	0.00						
	Voice Grade COCI - DS1 to DS0 Channel System - per month used for a Local Loop			UEA	1D1VG	1.38	10.07	7.08								
	Voice Grade COCI - DS1 to DS0 Channel System - per month used for connection to a channelized DS1 Local Channel in the same SWC as collocation			U1TUC	1D1VG	1.38	10.07	7.08	0.00	0.00						
	DS3 to DS1 Channel System per month			UNC3X	MQ3	211.19	199.28	118.64	40.34	39.07						
	STS-1 to DS1 Channel System per month			UNCSX	MQ3	211.19	199.28	118.64	40.34	39.07						
	DS1 COCI used with Loop per month			USL	UC1D1	13.76	10.07	7.08								
	DS1 COCI (used for connection to a channelized DS1 Local Channel in the same SWC as collocation) per month			U1TUA	UC1D1	13.76	10.07	7.08	0.00	0.00						
	DS1 COCI used with Interoffice Channel per month			U1TD1	UC1D1	13.76	10.07	7.08	0.00	0.00						
	DS3 Interface Unit (DS1 COCI) used with Local Channel per month			ULDD1	UC1D1	13.76	10.07	7.08	0.00	0.00						
UNBUNDLED LOCAL EXCHANGE SWITCHING(PORTS)																
	The Exchange Switching Port Rates Reflected Here Apply to Embedded Base Switching Ports as of March 10, 2005 and Consist of the TELRIC Cost Based Rates Plus $1.00 in Accordance with the TRRO.															
	Exchange Ports															
	NOTE: Although the Port Rate includes all available features in GA, KY, LA & TN, the desired features will need to be ordered using retail USOCs															
	2-WIRE VOICE GRADE LINE PORT RATES (RES)															
	Exchange Ports - 2-Wire Analog Line Port- Res.			UEPSR	UEPRL	2.40	3.74	3.63	1.88	1.80						
	Exchange Ports - 2-Wire Analog Line Port with Caller ID - Res.			UEPSR	UEPRC	2.40	3.74	3.63	1.88	1.80						
	#NAME?			UEPSR	UEPRO	2.40	3.74	3.63	1.88	1.80						
	Exchange Ports - 2-Wire VG unbundled Florida area calling with Caller ID - Res.			UEPSR	UEPAF	2.40	3.74	3.63	1.88	1.80						
	Exchange Ports - 2-Wire VG unbundled Florida Residence Area Calling Plan, without Caller ID capability			UEPSR	UEPA9	2.40	3.74	3.63	1.88	1.80						
	Exchange Ports - 2-Wire VG unbundled Florida extended dialing port for use with CREX7 and Caller ID			UEPSR	UEPA1	2.40	3.74	3.63	1.88	1.80						
	Exchange Ports - 2-Wire VG unbundled Florida extended dialing port for use with CREX7, without Caller ID capability			UEPSR	UEPA8	2.40	3.74	3.63	1.88	1.80						
	Exchange Ports - 2-Wire VG unbundled res, low usage line port with Caller ID (LUM)			UEPSR	UEPAP	2.40	3.74	3.63	1.88	1.80						
	2-Wire voice unbundled Low Usage Line Port without Caller ID Capability			UEPSR	UEPRT	2.40	3.74	3.63	1.88	1.80						
	Subsequent Activity			UEPSR	USASC	0.00	0.00	0.00								
	FEATURES															
	All Available Vertical Features			UEPSR	UEPVF	2.26	0.00	0.00								
	2-WIRE VOICE GRADE LINE PORT RATES (BUS)															
	Exchange Ports - 2-Wire Analog Line Port without Caller ID - Bus			UEPSB	UEPBL	2.40	3.74	3.63	1.88	1.80						
	Exchange Ports - 2-Wire VG unbundled Line Port with unbundled port with Caller+E484 ID - Bus.			UEPSB	UEPBC	2.40	3.74	3.63	1.88	1.80						
	Exchange Ports - 2-Wire Analog Line Port outgoing only - Bus.			UEPSB	UEPBO	2.40	3.74	3.63	1.88	1.80						
	Exhange Ports - 2-Wire VG unbundled incoming only port with Caller ID - Bus			UEPSB	UEPB1	2.40	3.74	3.63	1.88	1.80						
	2-Wire voice unbundled Incoming Only Port without Caller ID Capability			UEPSB	UEPBE	2.40	3.74	3.63	1.88	1.80						
	Subsequent Activity			UEPSB	USASC	0.00	0.00	0.00								
	FEATURES															
	All Available Vertical Features			UEPSB	UEPVF	2.26	0.00	0.00								
	EXCHANGE PORT RATES (DID & PBX)															
	2-Wire VG Unbundled 2-Way PBX Trunk - Res			UEPSE	UEPRD	2.40	39.06	18.18	12.35	0.7187						
	2-Wire VG Line Side Unbundled 2-Way PBX Trunk - Bus			UEPSP	UEPPC	2.40	39.06	18.18	12.35	0.7187						
	2-Wire VG Line Side Unbundled Outward PBX Trunk - Bus			UEPSP	UEPPO	2.40	39.06	18.18	12.35	0.7187						

UNBUNDLED NETWORK ELEMENTS - Florida

Attachment: 2 Ex. A

CATEGORY	RATE ELEMENTS	Interim	Zone	BCS	USOC	RATES ($)					Svc Order Submitted Elec per LSR	Svc Order Submitted Manually per LSR	Incremental Charge - Manual Svc Order vs. Electronic-1st	Incremental Charge - Manual Svc Order vs. Electronic-Add'l	Incremental Charge - Manual Svc Order vs. Electronic-Disc 1st	Incremental Charge - Manual Svc Order vs. Electronic-Disc Add'l
						Rec	Nonrecurring		Nonrecurring Disconnect		OSS Rates ($)					
							First	Add'l	First	Add'l	SOMEC	SOMAN	SOMAN	SOMAN	SOMAN	SOMAN
	2-Wire VG Line Side Unbundled Incoming PBX Trunk - Bus			UEPSP	UEPP1	2.40	39.06	18.18	12.35	0.7187						
	2-Wire Analog Long Distance Terminal PBX Trunk - Bus			UEPSP	UEPLD	2.40	39.06	18.18	12.35	0.7187						
	2-Wire Voice Unbundled PBX LD Terminal Ports			UEPSP	UEPLD	2.40	39.06	18.18	12.35	0.7187						
	2-Wire Vice Unbundled 2-Way PBX Usage Port			UEPSP	UEPXA	2.40	39.06	18.18	12.35	0.7187						
	2-Wire Voice Unbundled PBX Toll Terminal Hotel Ports			UEPSP	UEPXB	2.40	39.06	18.18	12.35	0.7187						
	2-Wire Voice Unbundled PBX LD DDD Terminals Port			UEPSP	UEPXC	2.40	39.06	18.18	12.35	0.7187						
	2-Wire Voice Unbundled PBX LD Terminal Switchboard Port			UEPSP	UEPXD	2.40	39.06	18.18	12.35	0.7187						
	2-Wire Voice Unbundled PBX LD Terminal Switchboard IDD Capable Port			UEPSP	UEPXE	2.40	39.06	18.18	12.35	0.7187						
	2-Wire Voice Unbundled 2-Way PBX Hotel/Hospital Economy Administrative Calling Port			UEPSP	UEPXL	2.40	39.06	18.18	12.35	0.7187						
	2-Wire Voice Unbundled 2-Way PBX Hotel/Hospital Economy Room Calling Port			UEPSP	UEPXM	2.40	39.06	18.18	12.35	0.7187						
	2-Wire Voice Unbundled 1-Way Outgoing PBX Hotel/Hospital Discount Room Calling Port			UEPSP	UEPXO	2.40	39.06	18.18	12.35	0.7187						
	2-Wire Voice Unbundled 1-Way Outgoing PBX Measured Port			UEPSP	UEPXS	2.40	39.06	18.18	12.35	0.7187						
	Subsequent Activity			UEPSP	USASC	0.00	0.00	0.00								
FEATURES																
	All Available Vertical Features			UEPSP UEPSE	UEPVF	2.26	0.00	0.00								
NOTE: Transmission/usage charges associated with POTS circuit switched usage will also apply to circuit switched voice and/or circuit switched data transmission by B-Channels associated with 2-wire ISDN ports.																
NOTE: Access to B Channel or D Channel Packet capabilities will be available only through BFR/New Business Request Process. Rates for the packet capabilities will be determined via the Bona Fide Request/New Business Request Process.																
2-WIRE VOICE GRADE LINE PORT RATES (DID)																
	Exchange Ports - 2-Wire DID Port			UEPEX	UEPP2	9.73	78.41	15.82	41.94	4.26						
2-WIRE VOICE GRADE LINE PORT RATES (ISDN-BRI)																
	Exchange Ports - 2-Wire ISDN Port (See Notes below.)			UEPTX, UEPSX	U1PMA	8.83	46.83	50.68	27.64	11.93						
	All Features Offered			UEPTX, UEPSX	UEPVF	2.26	0.00	0.00								
	Exchange Ports - 2-Wire ISDN Port -- Channel Profiles			UEPTX, UEPSX	U1UMA	0.00	0.00	0.00								
NOTE: Access to B Channel or D Channel Packet capabilities will be available only through BFR/New Business Request Process. Rates for the packet capabilities will be determined via the Bona Fide Request/New Business Request Process.																
NOTE: Access to B Channel or D Channel Packet capabilities will be available only through BFR/New Business Request Process. Rates for the packet capabilities will be determined via the Bona Fide Request/New Business Request Process.																
UNBUNDLED PORT with REMOTE CALL FORWARDING CAPABILITY																
UNBUNDLED REMOTE CALL FORWARDING SERVICE - RESIDENCE																
	Unbundled Remote Call Forwarding Service, Area Calling, Res			UEPVR	UERAC	2.40	3.74	3.63	1.88	1.80						
	Unbundled Remote Call Forwarding Service, Local Calling - Res			UEPVR	UERLC	2.40	3.74	3.63	1.88	1.80						
	Unbundled Remote Call Forwarding Service, InterLATA - Res			UEPVR	UERTE	2.40	3.74	3.63	1.88	1.80						
	Unbundled Remote Call Forwarding Service, IntraLATA - Res			UEPVR	UERTR	2.40	3.74	3.63	1.88	1.80						
Non-Recurring																
	Unbundled Remote Call Forwarding Service - Conversion - Switch-as-is			UEPVR	USAC2		0.102	0.102								
	Unbundled Remote Call Forwarding Service - Conversion with allowed change (PIC and LPIC)			UEPVR	USACC		0.102	0.102								
UNBUNDLED REMOTE CALL FORWARDING - Bus																
	Unbundled Remote Call Forwarding Service, Area Calling - Bus			UEPVB	UERAC	2.40	3.74	3.63	1.88	1.80						
	Unbundled Remote Call Forwarding Service, Local Calling - Bus			UEPVB	UERLC	2.40	3.74	3.63	1.88	1.80						
	Unbundled Remote Call Forwarding Service, InterLATA - Bus			UEPVB	UERTE	2.40	3.74	3.63	1.88	1.80						
	Unbundled Remote Call Forwarding Service, IntraLATA - Bus			UEPVB	UERTR	2.40	3.74	3.63	1.88	1.80						
	Unbundled Remote Call Forwarding Service Expanded and Exception Local Calling			UEPVB	UERVJ	2.40	3.74	3.63	1.88	1.80						
Non-Recurring																
	Unbundled Remote Call Forwarding Service - Conversion - Switch-as-is			UEPVB	USAC2		0.102	0.102								
	Unbundled Remote Call Forwarding Service - Conversion with allowed change (PIC and LPIC)			UEPVB	USACC		0.102	0.102								
UNBUNDLED LOCAL SWITCHING, PORT USAGE																
End Office Switching (Port Usage)																
	End Office Switching Function, Per MOU					0.0007662										
	End Office Trunk Port - Shared, Per MOU					0.000164										
Tandem Switching (Port Usage) (Local or Access Tandem)																
	Tandem Switching Function Per MOU					0.0001319										
	Tandem Trunk Port - Shared, Per MOU					0.000235										
	Tandem Switching Function Per MOU (Melded)					0.000027185										
	Tandem Trunk Port - Shared, Per MOU (Melded)					0.000048434										

UNBUNDLED NETWORK ELEMENTS - Florida

Attachment: 2 Ex. A

CATEGORY	RATE ELEMENTS	Interim	Zone	BCS	USOC	RATES ($) Rec	Nonrecurring First	Nonrecurring Add'l	Nonrecurring Disconnect First	Nonrecurring Disconnect Add'l	Svc Order Submitted Elec per LSR	Svc Order Submitted Manually per LSR	Incremental Charge - Manual Svc Order vs. Electronic- 1st	Incremental Charge - Manual Svc Order vs. Electronic- Add'l	Incremental Charge - Manual Svc Order vs. Electronic- Disc 1st	Incremental Charge - Manual Svc Order vs. Electronic- Disc Add'l
											OSS Rates ($)					
							First	Add'l	First	Add'l	SOMEC	SOMAN	SOMAN	SOMAN	SOMAN	SOMAN
	Melded Factor: 20.61% of the Tandem Rate															
	Common Transport															
	Common Transport - Per Mile, Per MOU					0.0000035										
	Common Transport - Facilities Termination Per MOU					0.0004372										
UNBUNDLED PORT/LOOP COMBINATIONS - COST BASED RATES																
	>Cost Based Rates are applied where BellSouth is required by FCC and/or State Commission rule to provide Unbundled Local Switching or Switch Ports.															
	> The UNE-P Switching Port Rates Reflected in the Cost Based Section Apply to Embedded Base UNE-Ps as of March 10, 2005 and Consist of the TELRIC Cost Based Rates Plus $1.00 in Accordance with the TRRO.															
	>Features shall apply to the Unbundled Port/Loop Combination - Cost Based Rate section in the same manner as they are applied to the Stand-Alone Unbundled Port section of this Rate Exhibit.															
	>End Office and Tandem Switching Usage and Common Transport Usage rates in the Port section of this rate exhibit shall apply to all combinations of loop/port network elements except for UNE Coin Port/Loop Combinations.															
	>The first and additional Port nonrecurring charges apply to Not Currently Combined Combos. For Currently Combined Combos the nonrecurring charges shall be those identified in the Nonrecurring - Currently Combined sections.															
	2-WIRE VOICE GRADE LOOP WITH 2-WIRE LINE PORT (RES)															
	UNE Port/Loop Combination Rates															
	2-Wire VG Loop/Port Combo - Zone 1					11.94										
	2-Wire VG Loop/Port Combo - Zone 2					16.05										
	2-Wire VG Loop/Port Combo - Zone 3					26.80										
	UNE Loop Rates															
	2-Wire Voice Grade Loop (SL1) - Zone 1		1	UEPRX	UEPLX	9.77										
	2-Wire Voice Grade Loop (SL1) - Zone 2		2	UEPRX	UEPLX	13.88										
	2-Wire Voice Grade Loop (SL1) - Zone 3		3	UEPRX	UEPLX	24.63										
	2-Wire Voice Grade Line Port Rates (Res)															
	2-Wire voice unbundled port - residence			UEPRX	UEPRL	2.17	53.31	26.46	27.50	8.37						
	2-Wire voice unbundled port with Caller ID - res			UEPRX	UEPRC	2.17	53.31	26.46	27.50	8.37						
	2-Wire voice unbundled port outgoing only - res			UEPRX	UEPRO	2.17	53.31	26.46	27.50	8.37						
	2-Wire voice unbundled Florida Area Calling with Caller ID - res			UEPRX	UEPAF	2.17	53.31	26.46	27.50	8.37						
	2-Wire voice unbundles res, low usage line port with Caller ID (LUM)			UEPRX	UEPAP	2.17	53.31	26.46	27.50	8.37						
	2-Wire voice unbundled Florida extended dialing with Caller ID			UEPRX	UEPA1	2.17	53.31	26.46	27.50	8.37						
	2-Wire voice unbundled Florida extended dialing port without Caller ID capability			UEPRX	UEPA8	2.17	53.31	26.46	27.50	8.37						
	2-Wire voice unbundled Florida Area Calling Port without Caller ID Capability			UEPRX	UEPA9	2.17	53.31	26.46	27.50	8.37						
	2-Wire voice unbundled Low Usage Line Port without Caller ID Capability			UEPRX	UEPRT	2.17	53.31	26.46	27.50	8.37						
	FEATURES															
	All Features Offered			UEPRX	UEPVF	2.26	0.00	0.00								
	NONRECURRING CHARGES (NRCs) - CURRENTLY COMBINED															
	2-Wire Voice Grade Loop / Line Port Combination - Conversion - Switch-as-is			UEPRX	USAC2		0.102	0.102								
	2-Wire Voice Grade Loop / Line Port Combination - Conversion - Switch with change			UEPRX	USACC		0.102	0.102								
	2-Wire Voice Grade Loop / Line Port Platform - Installation Charge at QuickService location - Not Conversion of Existing Service			UEPRX	URECC		0.102									
	ADDITIONAL NRCs															
	2-Wire Voice Grade Loop/Line Port Combination - Subsequent Activity			UEPRX	USAS2	0.00	0.00	0.00								
	Unbundled Miscellaneous Rate Element, Tag Loop at End User Premise			UEPRX	URETL		8.33	0.83								
	OFF/ON PREMISES EXTENSION CHANNELS															
	2 Wire Analog Voice Grade Extension Loop – Non-Design		1	UEPRX	UEAEN	10.69	49.57	22.83	25.62	6.57						
	2 Wire Analog Voice Grade Extension Loop – Non-Design		2	UEPRX	UEAEN	15.20	49.57	22.83	25.62	6.57						
	2 Wire Analog Voice Grade Extension Loop – Non-Design		3	UEPRX	UEAEN	26.97	49.57	22.83	25.62	6.57						
	2 Wire Analog Voice Grade Extension Loop – Design		1	UEPRX	UEAED	12.24	135.75	82.47	63.53	12.01						
	2 Wire Analog Voice Grade Extension Loop – Design		2	UEPRX	UEAED	17.40	135.75	82.47	63.53	12.01						
	2 Wire Analog Voice Grade Extension Loop – Design		3	UEPRX	UEAED	30.87	135.75	82.47	63.53	12.01						
	INTEROFFICE TRANSPORT															
	Interoffice Transport - Dedicated - 2 Wire Voice Grade - Facility Termination			UEPRX	U1TV2	25.32	47.35	31.78								

CATEGORY	RATE ELEMENTS	Interim	Zone	BCS	USOC	RATES ($)					Svc Order Submitted Elec per LSR	Svc Order Submitted Manually per LSR	Incremental Charge - Manual Svc Order vs. Electronic-1st	Incremental Charge - Manual Svc Order vs. Electronic-Add'l	Incremental Charge - Manual Svc Order vs. Electronic-Disc 1st	Incremental Charge - Manual Svc Order vs. Electronic-Disc Add'l
						Rec	Nonrecurring		Nonrecurring Disconnect		OSS Rates ($)					
							First	Add'l	First	Add'l	SOMEC	SOMAN	SOMAN	SOMAN	SOMAN	SOMAN
	Interoffice Transport - Dedicated - 2 Wire Voice Grade - Per Mile or Fraction Mile			UEPRX	U1TVM	0.0091	0.00	0.00								
	2-WIRE VOICE GRADE LOOP WITH 2-WIRE LINE PORT (BUS)															
	UNE Port/Loop Combination Rates															
	2-Wire VG Loop/Port Combo - Zone 1					11.94										
	2-Wire VG Loop/Port Combo - Zone 2					16.05										
	2-Wire VG Loop/Port Combo - Zone 3					26.80										
	UNE Loop Rates															
	2-Wire Voice Grade Loop (SL1) - Zone 1		1	UEPBX	UEPLX	9.77										
	2-Wire Voice Grade Loop (SL1) - Zone 2		2	UEPBX	UEPLX	13.88										
	2-Wire Voice Grade Loop (SL1) - Zone 3		3	UEPBX	UEPLX	24.63										
	2-Wire Voice Grade Line Port (Bus)															
	2-Wire voice unbundled port without Caller ID - bus			UEPBX	UEPBL	2.17	53.31	26.46	27.50	8.37						
	2-Wire voice unbundled port with Caller + E484 ID - bus			UEPBX	UEPBC	2.17	53.31	26.46	27.50	8.37						
	2-Wire voice unbundled port outgoing only - bus			UEPBX	UEPBO	2.17	53.31	26.46	27.50	8.37						
	2-Wire voice unbundled incoming only port with Caller ID - Bus			UEPBX	UEPB1	2.17	53.31	26.46	27.50	8.37						
	2-Wire voice unbundled Incoming Only Port without Caller ID Capability			UEPBX	UEPBE	2.17	53.31	26.46	27.50	8.37						
	FEATURES															
	All Features Offered			UEPBX	UEPVF	2.26	0.00	0.00								
	NONRECURRING CHARGES (NRCs) - CURRENTLY COMBINED															
	2-Wire Voice Grade Loop / Line Port Combination - Conversion - Switch-as-is			UEPBX	USAC2		0.102	0.102								
	2-Wire Voice Grade Loop / Line Port Combination - Conversion - Switch with change			UEPBX	USACC		0.102	0.102								
	ADDITIONAL NRCs															
	2-Wire Voice Grade Loop/Line Port Combination - Subsequent Activity			UEPBX	USAS2		0.00	0.00								
	Unbundled Miscellaneous Rate Element, Tag Loop at End User Premise			UEPBX	URETL		8.33	0.83								
	OFF/ON PREMISES EXTENSION CHANNELS															
	2 Wire Analog Voice Grade Extension Loop – Non-Design		1	UEPBX	UEAEN	10.69	49.57	22.83	25.62	6.57						
	2 Wire Analog Voice Grade Extension Loop – Non-Design		2	UEPBX	UEAEN	15.20	49.57	22.83	25.62	6.57						
	2 Wire Analog Voice Grade Extension Loop – Non-Design		3	UEPBX	UEAEN	26.97	49.57	22.83	25.62	6.57						
	2 Wire Analog Voice Grade Extension Loop – Design		1	UEPBX	UEAED	12.24	135.75	82.47	63.53	12.01						
	2 Wire Analog Voice Grade Extension Loop – Design		2	UEPBX	UEAED	17.40	135.75	82.47	63.53	12.01						
	2 Wire Analog Voice Grade Extension Loop – Design		3	UEPBX	UEAED	30.87	135.75	82.47	63.53	12.01						
	INTEROFFICE TRANSPORT															
	Interoffice Transport - Dedicated - 2 Wire Voice Grade - Facility Termination			UEPBX	U1TV2	25.32	47.35	31.78								
	Interoffice Transport - Dedicated - 2 Wire Voice Grade - Per Mile or Fraction Mile			UEPBX	U1TVM	0.0091	0.00	0.00								
	2-WIRE VOICE GRADE LOOP WITH 2-WIRE LINE PORT (RES - PBX)															
	UNE Port/Loop Combination Rates															
	2-Wire VG Loop/Port Combo - Zone 1					11.94										
	2-Wire VG Loop/Port Combo - Zone 2					16.05										
	2-Wire VG Loop/Port Combo - Zone 3					26.80										
	UNE Loop Rates															
	2-Wire Voice Grade Loop (SL 1) - Zone 1		1	UEPRG	UEPLX	9.77										
	2-Wire Voice Grade Loop (SL 1) - Zone 2		2	UEPRG	UEPLX	13.88										
	2-Wire Voice Grade Loop (SL 1) - Zone 3		3	UEPRG	UEPLX	24.63										
	2-Wire Voice Grade Line Port Rates (RES - PBX)															
	2-Wire VG Unbundled Combination 2-Way PBX Trunk Port - Res			UEPRG	UEPRD	2.17	174.81	100.65	75.88	12.73						
	FEATURES															
	All Features Offered			UEPRG	UEPVF	2.26	0.00	0.00								
	NONRECURRING CHARGES (NRCs) - CURRENTLY COMBINED															
	2-Wire Voice Grade Loop/ Line Port Combination (PBX) - Conversion - Switch-As-Is			UEPRG	USAC2		8.45	1.91								
	2-Wire Voice Grade Loop/ Line Port Combination (PBX) - Conversion - Switch with Change			UEPRG	USACC		8.45	1.91								
	ADDITIONAL NRCs															
	2-Wire Voice Grade Loop/ Line Port Combination (PBX) - Subsequent Activity			UEPRG	USAS2	0.00	0.00	0.00								

CATEGORY	RATE ELEMENTS	Interim	Zone	BCS	USOC	RATES ($)					Svc Order Submitted Elec per LSR	Svc Order Submitted Manually per LSR	Incremental Charge - Manual Svc Order vs. Electronic-1st	Incremental Charge - Manual Svc Order vs. Electronic-Add'l	Incremental Charge - Manual Svc Order vs. Electronic-Disc 1st	Incremental Charge - Manual Svc Order vs. Electronic-Disc Add'l
						Rec	Nonrecurring		Nonrecurring Disconnect		OSS Rates ($)					
							First	Add'l	First	Add'l	SOMEC	SOMAN	SOMAN	SOMAN	SOMAN	SOMAN
	PBX Subsequent Activity - Change/Rearrange Multiline Hunt Group						7.86	7.86								
	Unbundled Miscellaneous Rate Element, Tag Loop at End User Premise			UEPRG	URETL		8.33	0.83								
OFF/ON PREMISES EXTENSION CHANNELS																
	Local Channel Voice grade, per termination		1	UEPRG	P2JHX	12.24	135.75	82.47	63.53	12.01						
	Local Channel Voice grade, per termination		2	UEPRG	P2JHX	17.40	135.75	82.47	63.53	12.01						
	Local Channel Voice grade, per termination		3	UEPRG	P2JHX	30.87	135.75	82.47	63.53	12.01						
	Non-Wire Direct Serve Channel Voice Grade		1	UEPRG	SDD2X	12.92	120.38	43.56	95.00	10.54						
	Non-Wire Direct Serve Channel Voice Grade		2	UEPRG	SDD2X	18.36	120.38	43.56	95.00	10.54						
	Non-Wire Direct Serve Channel Voice Grade		3	UEPRG	SDD2X	32.58	120.38	43.56	95.00	10.54						
INTEROFFICE TRANSPORT																
	Interoffice Transport - Dedicated - 2 Wire Voice Grade - Facility Termination			UEPRG	U1TV2	25.32	47.35	31.78								
	Interoffice Transport - Dedicated - 2 Wire Voice Grade - Per Mile or Fraction Mile			UEPRG	U1TVM	0.0091	0.00	0.00								
2-WIRE VOICE GRADE LOOP WITH 2-WIRE LINE PORT (BUS - PBX)																
UNE Port/Loop Combination Rates																
	2-Wire VG Loop/Port Combo - Zone 1					11.94										
	2-Wire VG Loop/Port Combo - Zone 2					16.05										
	2-Wire VG Loop/Port Combo - Zone 3					26.80										
UNE Loop Rates																
	2-Wire Voice Grade Loop (SL 1) - Zone 1		1	UEPPX	UEPLX	9.77										
	2-Wire Voice Grade Loop (SL 1) - Zone 2		2	UEPPX	UEPLX	13.88										
	2-Wire Voice Grade Loop (SL 1) - Zone 3		3	UEPPX	UEPLX	24.63										
2-Wire Voice Grade Line Port Rates (BUS - PBX)																
	Line Side Unbundled Combination 2-Way PBX Trunk Port - Bus			UEPPX	UEPPC	2.17	174.81	100.65	75.88	12.73						
	Line Side Unbundled Outward PBX Trunk Port - Bus			UEPPX	UEPPO	2.17	174.81	100.65	75.88	12.73						
	Line Side Unbundled Incoming PBX Trunk Port - Bus			UEPPX	UEPP1	2.17	174.81	100.65	75.88	12.73						
	2-Wire Voice Unbundled PBX LD Terminal Ports			UEPPX	UEPLD	2.17	174.81	100.65	75.88	12.73						
	2-Wire Voice Unbundled 2-Way Combination PBX Usage Port			UEPPX	UEPXA	2.17	174.81	100.65	75.88	12.73						
	2-Wire Voice Unbundled PBX Toll Terminal Hotel Ports			UEPPX	UEPXB	2.17	174.81	100.65	75.88	12.73						
	2-Wire Voice Unbundled PBX LD DDD Terminals Port			UEPPX	UEPXC	2.17	174.81	100.65	75.88	12.73						
	2-Wire Voice Unbundled PBX LD Terminal Switchboard Port			UEPPX	UEPXD	2.17	174.81	100.65	75.88	12.73						
	2-Wire Voice Unbundled PBX LD Terminal Switchboard IDD Capable Port			UEPPX	UEPXE	2.17	174.81	100.65	75.88	12.73						
	2-Wire Voice Unbundled 2-Way PBX Hotel/Hospital Economy Administrative Calling Port			UEPPX	UEPXL	2.17	174.81	100.65	75.88	12.73						
	2-Wire Voice Unbundled 2-Way PBX Hotel/Hospital Economy Room Calling Port			UEPPX	UEPXM	2.17	174.81	100.65	75.88	12.73						
	2-Wire Voice Unbundled 1-Way Outgoing PBX Hotel/Hospital Discount Room Calling Port			UEPPX	UEPXO	2.17	174.81	100.65	75.88	12.73						
	2-Wire Voice Unbundled 1-Way Outgoing PBX Measured Port			UEPPX	UEPXS	2.17	174.81	100.65	75.88	12.73						
FEATURES																
	All Features Offered			UEPPX	UEPVF	2.26	0.00	0.00								
NONRECURRING CHARGES (NRCs) - CURRENTLY COMBINED																
	2-Wire Voice Grade Loop/ Line Port Combination (PBX) - Conversion - Switch-As-Is			UEPPX	USAC2		8.45	1.91								
	2-Wire Voice Grade Loop/ Line Port Combination (PBX) - Conversion - Switch with Change			UEPPX	USACC		8.45	1.91								
ADDITIONAL NRCs																
	2-Wire Voice Grade Loop/ Line Port Combination (PBX) - Subsequent Activity			UEPPX	USAS2	0.00	0.00	0.00								
	PBX Subsequent Activity - Change/Rearrange Multiline Hunt Group						7.86	7.86								
	Unbundled Miscellaneous Rate Element, Tag Loop at End User Premise			UEPPX	URETL		8.33	0.83								
OFF/ON PREMISES EXTENSION CHANNELS																
	Local Channel Voice grade, per termination		1	UEPPX	P2JHX	12.24	135.75	82.47	63.53	12.01						
	Local Channel Voice grade, per termination		2	UEPPX	P2JHX	17.40	135.75	82.47	63.53	12.01						
	Local Channel Voice grade, per termination		3	UEPPX	P2JHX	30.87	135.75	82.47	63.53	12.01						
	Non-Wire Direct Serve Channel Voice Grade		1	UEPPX	SDD2X	12.92	120.38	43.56	95.00	10.54						
	Non-Wire Direct Serve Channel Voice Grade		2	UEPPX	SDD2X	18.36	120.38	43.56	95.00	10.54						

CATEGORY	RATE ELEMENTS	Interim	Zone	BCS	USOC	RATES ($)					Svc Order Submitted Elec per LSR	Svc Order Submitted Manually per LSR	Incremental Charge - Manual Svc Order vs. Electronic-1st	Incremental Charge - Manual Svc Order vs. Electronic-Add'l	Incremental Charge - Manual Svc Order vs. Electronic-Disc 1st	Incremental Charge - Manual Svc Order vs. Electronic-Disc Add'l
						Rec	Nonrecurring		Nonrecurring Disconnect		OSS Rates ($)					
							First	Add'l	First	Add'l	SOMEC	SOMAN	SOMAN	SOMAN	SOMAN	SOMAN
	Non-Wire Direct Serve Channel Voice Grade		3	UEPPX	SDD2X	32.58	120.38	43.56	95.00	10.54						
INTEROFFICE TRANSPORT																
	Interoffice Transport - Dedicated - 2 Wire Voice Grade - Facility Termination			UEPPX	U1TV2	25.32	47.35	31.78								
	Interoffice Transport - Dedicated - 2 Wire Voice Grade - Per Mile or Fraction Mile			UEPPX	U1TVM	0.0091	0.00	0.00								
2-WIRE VOICE GRADE LOOP WITH 2-WIRE ANALOG LINE COIN PORT																
UNE Port/Loop Combination Rates																
	2-Wire VG Coin Port/Loop Combo – Zone 1					11.94										
	2-Wire VG Coin Port/Loop Combo – Zone 2					16.05										
	2-Wire VG Coin Port/Loop Combo – Zone 3					26.80										
UNE Loop Rates																
	2-Wire Voice Grade Loop (SL1) - Zone 1		1	UEPCO	UEPLX	9.77										
	2-Wire Voice Grade Loop (SL1) - Zone 2		2	UEPCO	UEPLX	13.88										
	2-Wire Voice Grade Loop (SL1) - Zone 3		3	UEPCO	UEPLX	24.63										
2-Wire Voice Grade Line Ports (COIN)																
	2-Wire Coin 2-Way with Operator Screening and Blocking: 011, 900/976, 1+DDD (FL)			UEPCO	UEP2F	2.17	53.31	26.46	27.50	8.37						
	2-Wire Coin 2-Way with Operator Screening and 011 Blocking (FL)			UEPCO	UEPFA	2.17	53.31	26.46	27.50	8.37						
	2-Wire Coin 2-Way with Operator Screening and Blocking: 900/976, 1+DDD, 011+, and Local (FL)			UEPCO	UEPCG	2.17	53.31	26.46	27.50	8.37						
	2-Wire Coin Outward with Operator Screening and 011 Blocking (AL, FL)			UEPCO	UEPRK	2.17	53.31	26.46	27.50	8.37						
	2-Wire Coin Outward with Operator Screening and Blocking: 900/976, 1+DDD, 011+ (FL)			UEPCO	UEPOF	2.17	53.31	26.46	27.50	8.37						
	2-Wire Coin Outward with Operator Screening and Blocking: 900/976, 1+DDD, 011+, and Local (FL, GA)			UEPCO	UEPCQ	2.17	53.31	26.46	27.50	8.37						
	2-Wire 2-Way Smartline with 900/976 (all states except LA)			UEPCO	UEPCK	2.17	53.31	26.46	27.50	8.37						
	2-Wire Coin Outward Smartline with 900/976 (all states except LA)			UEPCO	UEPCR	2.17	53.31	26.46	27.50	8.37						
ADDITIONAL UNE COIN PORT/LOOP (RC)																
	UNE Coin Port/Loop Combo Usage (Flat Rate)			UEPCO	URECU	1.86	0.00	0.00	0.00	0.00						
NONRECURRING CHARGES - CURRENTLY COMBINED																
	2-Wire Voice Grade Loop / Line Port Combination - Conversion - Switch-as-is			UEPCO	USAC2		0.102	0.102								
	2-Wire Voice Grade Loop / Line Port Combination - Conversion - Switch with change			UEPCO	USACC		0.102	0.102								
ADDITIONAL NRCs																
	2-Wire Voice Grade Loop/Line Port Combination - Subsequent Activity			UEPCO	USAS2		0.00	0.00								
	Unbundled Miscellaneous Rate Element, Tag Loop at End User Premise			UEPCO	URETL		8.33	0.83								
2-WIRE VOICE LOOP/ 2WIRE VOICE GRADE IO TRANSPORT/ 2-WIRE LINE PORT (RES)																
UNE Port/Loop Combination Rates																
	2-Wire VG Loop/IO Tranport/Port Combo - Zone 1					14.64										
	2-Wire VG Loop/IO Tranport/Port Combo - Zone 2					19.80										
	2-Wire VG Loop/IO Tranport/Port Combo - Zone 3					33.27										
UNE Loop Rates																
	2-Wire Voice Grade Loop (SL2) - Zone 1		1	UEPFR	UECF2	12.24										
	2-Wire Voice Grade Loop (SL2) - Zone 2		2	UEPFR	UECF2	17.40										
	2-Wire Voice Grade Loop (SL2) - Zone 3		3	UEPFR	UECF2	30.87										
2-Wire Voice Grade Line Port Rates (Res)																
	2-Wire voice unbundled port - residence			UEPFR	UEPRL	2.40	174.81	100.65	75.88	12.73						
	2-Wire voice unbundled port with Caller ID - res			UEPFR	UEPRC	2.40	174.81	100.65	75.88	12.73						
	2-Wire voice unbundled port outgoing only - res			UEPFR	UEPRO	2.40	174.81	100.65	75.88	12.73						
	2-Wire voice unbundled Florida Area Calling with Caller ID - res			UEPFR	UEPAF	2.40	174.81	100.65	75.88	12.73						
	2-Wire voice unbundles res, low usage line port with Caller ID (LUM)			UEPFR	UEPAP	2.40	174.81	100.65	75.88	12.73						
INTEROFFICE TRANSPORT																
	Interoffice Transport - Dedicated - 2 Wire Voice Grade - Facility Termination			UEPFR	U1TV2	25.32	47.35	31.78								

CATEGORY	RATE ELEMENTS	Interim	Zone	BCS	USOC	RATES ($)					Svc Order Submitted Elec per LSR	Svc Order Submitted Manually per LSR	Incremental Charge - Manual Svc Order vs. Electronic-1st	Incremental Charge - Manual Svc Order vs. Electronic-Add'l	Incremental Charge - Manual Svc Order vs. Electronic-Disc 1st	Incremental Charge - Manual Svc Order vs. Electronic-Disc Add'l
						Rec	Nonrecurring		Nonrecurring Disconnect		OSS Rates ($)					
							First	Add'l	First	Add'l	SOMEC	SOMAN	SOMAN	SOMAN	SOMAN	SOMAN
	Interoffice Transport - Dedicated - 2 Wire Voice Grade - Per Mile or Fraction Mile			UEPFR	1L5XX	0.0091										
FEATURES																
	All Features Offered			UEPFR	UEPVF	2.26	0.00	0.00								
NONRECURRING CHARGES (NRCs) - CURRENTLY COMBINED																
	2-Wire Loop / Dedicated IO Transport / 2 Wire Line Port Combination - Conversion - Switch-as-is			UEPFR	USAC2		16.97	3.73								
	2-Wire Loop / Dedicated IO Transport / 2 Wire Line Port Combination - Conversion - Switch-With-Change			UEPFR	USACC		16.97	3.73								
	Unbundled Miscellaneous Rate Element, Tag Designed Loop at End User Premise			UEPFR	URETN		11.21	1.10								
2-WIRE VOICE LOOP/ 2WIRE VOICE GRADE IO TRANSPORT/ 2-WIRE LINE PORT (BUS)																
UNE Port/Loop Combination Rates																
	2-Wire VG Loop/IO Tranport/Port Combo - Zone 1					14.64										
	2-Wire VG Loop/IO Tranport/Port Combo - Zone 2					19.80										
	2-Wire VG Loop/IO Tranport/Port Combo - Zone 3					33.27										
UNE Loop Rates																
	2-Wire Voice Grade Loop (SL2) - Zone 1		1	UEPFB	UECF2	12.24										
	2-Wire Voice Grade Loop (SL2) - Zone 2		2	UEPFB	UECF2	17.40										
	2-Wire Voice Grade Loop (SL2) - Zone 3		3	UEPFB	UECF2	30.87										
2-Wire Voice Grade Line Port (Bus)																
	2-Wire voice unbundled port without Caller ID - bus			UEPFB	UEPBL	2.40	174.81	100.65	75.88	12.73						
	2-Wire voice unbundled port with Caller + E484 ID - bus			UEPFB	UEPBC	2.40	174.81	100.65	75.88	12.73						
	2-Wire voice unbundled port outgoing only - bus			UEPFB	UEPBO	2.40	174.81	100.65	75.88	12.73						
	2-Wire voice unbundled incoming only port with Caller ID - Bus			UEPFB	UEPB1	2.40	174.81	100.65	75.88	12.73						
INTEROFFICE TRANSPORT																
	Interoffice Transport - Dedicated - 2 Wire Voice Grade - Facility Termination			UEPFB	U1TV2	25.32	47.35	31.78								
	Interoffice Transport - Dedicated - 2 Wire Voice Grade - Per Mile or Fraction Mile			UEPFB	1L5XX	0.0091										
FEATURES																
	All Features Offered			UEPFB	UEPVF	2.26	0.00	0.00								
NONRECURRING CHARGES (NRCs) - CURRENTLY COMBINED																
	2-Wire Loop / Dedicated IO Transport / 2 Wire Line Port Combination - Conversion - Switch-as-is			UEPFB	USAC2		16.97	3.73								
	2-Wire Loop / Dedicated IO Transport / 2 Wire Line Port Combination - Conversion - Switch with change			UEPFB	USACC		16.97	3.73								
	Unbundled Miscellaneous Rate Element, Tag Designed Loop at End User Premise			UEPFB	URETN		11.21	1.10								
2-WIRE VOICE LOOP/ 2WIRE VOICE GRADE IO TRANSPORT/ 2-WIRE LINE PORT (PBX)																
UNE Port/Loop Combination Rates																
	2-Wire VG Loop/IO Tranport/Port Combo - Zone 1					14.64										
	2-Wire VG Loop/IO Tranport/Port Combo - Zone 2					19.80										
	2-Wire VG Loop/IO Tranport/Port Combo - Zone 3					33.27										
UNE Loop Rates																
	2-Wire Voice Grade Loop (SL2) - Zone 1		1	UEPFP	UECF2	12.24										
	2-Wire Voice Grade Loop (SL2) - Zone 2		2	UEPFP	UECF2	17.40										
	2-Wire Voice Grade Loop (SL2) - Zone 3		3	UEPFP	UECF2	30.87										
2-Wire Voice Grade Line Port Rates (BUS - PBX)																
	Line Side Unbundled Combination 2-Way PBX Trunk Port - Bus			UEPFP	UEPPC	2.40	174.81	100.65	75.88	12.73						
	Line Side Unbundled Outward PBX Trunk Port - Bus			UEPFP	UEPPO	2.40	174.81	100.65	75.88	12.73						
	Line Side Unbundled Incoming PBX Trunk Port - Bus			UEPFP	UEPP1	2.40	174.81	100.65	75.88	12.73						
	2-Wire Voice Unbundled PBX LD Terminal Ports			UEPFP	UEPLD	2.40	174.81	100.65	75.88	12.73						
	2-Wire Voice Unbundled 2-Way Combination PBX Usage Port			UEPFP	UEPXA	2.40	174.81	100.65	75.88	12.73						
	2-Wire Voice Unbundled PBX Toll Terminal Hotel Ports			UEPFP	UEPXB	2.40	174.81	100.65	75.88	12.73						
	2-Wire Voice Unbundled PBX LD DDD Terminals Port			UEPFP	UEPXC	2.40	174.81	100.65	75.88	12.73						
	2-Wire Voice Unbundled PBX LD Terminal Switchboard Port			UEPFP	UEPXD	2.40	174.81	100.65	75.88	12.73						
	2-Wire Voice Unbundled PBX LD Terminal Switchboard IDD Capable Port			UEPFP	UEPXE	2.40	174.81	100.65	75.88	12.73						
	2-Wire Voice Unbundled 2-Way PBX Hotel/Hospital Economy Administrative Calling Port			UEPFP	UEPXL	2.40	174.81	100.65	75.88	12.73						
	2-Wire Voice Unbundled 2-Way PBX Hotel/Hospital Economy Room Calling Port			UEPFP	UEPXM	2.40	174.81	100.65	75.88	12.73						

CATEGORY	RATE ELEMENTS	Interim	Zone	BCS	USOC	RATES ($)					Svc Order Submitted Elec per LSR	Svc Order Submitted Manually per LSR	Incremental Charge - Manual Svc Order vs. Electronic-1st	Incremental Charge - Manual Svc Order vs. Electronic-Add'l	Incremental Charge - Manual Svc Order vs. Electronic-Disc 1st	Incremental Charge - Manual Svc Order vs. Electronic-Disc Add'l
						Rec	Nonrecurring		Nonrecurring Disconnect		OSS Rates ($)					
							First	Add'l	First	Add'l	SOMEC	SOMAN	SOMAN	SOMAN	SOMAN	SOMAN
	2-Wire Voice Unbundled 1-Way Outgoing PBX Hotel/Hospital Discount Room Calling Port			UEPFP	UEPXO	2.40	174.81	100.65	75.88	12.73						
	2-Wire Voice Unbundled 1-Way Outgoing PBX Measured Port			UEPFP	UEPXS	2.40	174.81	100.65	75.88	12.73						
INTEROFFICE TRANSPORT																
	Interoffice Transport - Dedicated - 2 Wire Voice Grade - Facility Termination			UEPFP	U1TV2	25.32	47.35	31.78								
	Interoffice Transport - Dedicated - 2 Wire Voice Grade - Per Mile or Fraction Mile			UEPFP	1L5XX	0.0091										
FEATURES																
	All Features Offered			UEPFP	UEPVF	2.26	0.00	0.00								
NONRECURRING CHARGES (NRCs) - CURRENTLY COMBINED																
	2-Wire Loop / Dedicated IO Transport / 2 Wire Line Port Combination - Conversion - Switch-as-is			UEPFP	USAC2		16.97	3.73								
	2-Wire Loop / Dedicated IO Transport / 2 Wire Line Port Combination - Conversion - Switch with change			UEPFP	USACC		16.97	3.73								
	Unbundled Miscellaneous Rate Element, Tag Designed Loop at End User Premise			UEPFP	URETN		11.21	1.10								
2-WIRE VOICE GRADE LOOP- BUS ONLY - WITH 2-WIRE DID TRUNK PORT																
UNE Port/Loop Combination Rates																
	2-Wire VG Loop/2-Wire DID Trunk Port Combo - UNE Zone 1					21.95										
	2-Wire VG Loop/2-Wire DID Trunk Port Combo - UNE Zone 2					27.11										
	2-Wire VG Loop/2-Wire DID Trunk Port Combo - UNE Zone 3					40.58										
UNE Loop Rates																
	2-Wire Analog Voice Grade Loop - (SL2) - UNE Zone 1		1	UEPPX	UECD1	12.24										
	2-Wire Analog Voice Grade Loop - (SL2) - UNE Zone 2		2	UEPPX	UECD1	17.40										
	2-Wire Analog Voice Grade Loop - (SL2) - UNE Zone 3		3	UEPPX	UECD1	30.87										
UNE Port Rate																
	Exchange Ports - 2-Wire DID Port			UEPPX	UEPD1	9.71	214.16	98.29								
NONRECURRING CHARGES - CURRENTLY COMBINED																
	2-Wire Voice Grade Loop / 2-Wire DID Trunk Port Combination - Switch-as-is			UEPPX	USAC1		7.85	1.87								
	2-Wire Voice Grade Loop / 2-Wire DID Trunk Port Conversion with BellSouth Allowable Changes			UEPPX	USA1C		7.85	1.87								
ADDITIONAL NRCs																
	2-Wire DID Subsequent Activity - Add Trunks, Per Trunk			UEPPX	USAS1		32.26	32.26								
	Unbundled Miscellaneous Rate Element, Tag Designed Loop at End User Premise			UEPPX	URETN		11.21	1.10								
Telephone Number/Trunk Group Establisment Charges																
	DID Trunk Termination (One Per Port)			UEPPX	NDT	0.00	0.00	0.00								
	DID Numbers, Establish Trunk Group and Provide First Group of 20 DID Numbers			UEPPX	NDZ	0.00	0.00	0.00								
	Additional DID Numbers for each Group of 20 DID Numbers			UEPPX	ND4	0.00	0.00	0.00								
	DID Numbers, Non- consecutive DID Numbers , Per Number			UEPPX	ND5	0.00	0.00	0.00								
	Reserve Non-Consecutive DID numbers			UEPPX	ND6	0.00	0.00	0.00								
	Reserve DID Numbers			UEPPX	NDV	0.00	0.00	0.00								
2-WIRE ISDN DIGITAL GRADE LOOP WITH 2-WIRE ISDN DIGITAL LINE SIDE PORT																
UNE Port/Loop Combination Rates																
	2W ISDN Digital Grade Loop/2W ISDN Digital Line Side Port - UNE Zone 1					23.63										
	2W ISDN Digital Grade Loop/2W ISDN Digital Line Side Port - UNE Zone 2					30.05										
	2W ISDN Digital Grade Loop/2W ISDN Digital Line Side Port - UNE Zone 3					46.84										
UNE Loop Rates																
	2-Wire ISDN Digital Grade Loop - UNE Zone 1		1	UEPPB UEPPR	USL2X	15.25										
	2-Wire ISDN Digital Grade Loop - UNE Zone 2		2	UEPPB UEPPR	USL2X	21.67										
	2-Wire ISDN Digital Grade Loop - UNE Zone 3		3	UEPPB UEPPR	USL2X	38.46										
UNE Port Rate																
	Exchange Port - 2-Wire ISDN Line Side Port			UEPPR	UEPPR	8.38	194.52	145.09								
	Exchange Port - 2-Wire ISDN Line Side Port			UEPPB	UEPPB	8.38	194.52	145.09								
NONRECURRING CHARGES - CURRENTLY COMBINED																
	2-Wire ISDN Digital Grade Loop / 2-Wire ISDN Line Side Port Combination - Conversion			UEPPB UEPPR	USACB	0.00	25.22	17.00								

UNBUNDLED NETWORK ELEMENTS - Florida

Attachment: 2 Ex. A

CATEGORY	RATE ELEMENTS	Interim	Zone	BCS	USOC	RATES ($) Rec	Nonrecurring First	Nonrecurring Add'l	Nonrecurring Disconnect First	Nonrecurring Disconnect Add'l	Svc Order Submitted Elec per LSR	Svc Order Submitted Manually per LSR	Incremental Charge - Manual Svc Order vs. Electronic-1st	Incremental Charge - Manual Svc Order vs. Electronic-Add'l	Incremental Charge - Manual Svc Order vs. Electronic-Disc 1st	Incremental Charge - Manual Svc Order vs. Electronic-Disc Add'l
											OSS Rates ($)					
											SOMEC	SOMAN	SOMAN	SOMAN	SOMAN	SOMAN
	ADDITIONAL NRCs															
	Unbundled Miscellaneous Rate Element, Tag Designed Loop at End User Premise			UEPPB UEPPR	URETN		11.21	1.10								
	Unbundled Miscellaneous Rate Element, Tag Loop at End User Premise			UEPPB UEPPR	URETL		8.33	0.83								
	B-CHANNEL USER PROFILE ACCESS:															
	CVS/CSD (DMS/5ESS)			UEPPB UEPPR	U1UCA	0.00	0.00	0.00								
	CVS (EWSD)			UEPPB UEPPR	U1UCB	0.00	0.00	0.00								
	CSD			UEPPB UEPPR	U1UCC	0.00	0.00	0.00								
	B-CHANNEL AREA PLUS USER PROFILE ACCESS: (AL,KY,LA,MS SC,MS, & TN)															
	USER TERMINAL PROFILE															
	User Terminal Profile (EWSD only)			UEPPB UEPPR	U1UMA	0.00	0.00	0.00								
	VERTICAL FEATURES															
	All Vertical Features - One per Channel B User Profile			UEPPB UEPPR	UEPVF	2.26	0.00	0.00								
	INTEROFFICE CHANNEL MILEAGE															
	Interoffice Channel mileage each, including first mile and facilities termination			UEPPB UEPPR	M1GNC	25.3291	47.35	31.78	18.31	7.03						
	Interoffice Channel mileage each, additional mile			UEPPB UEPPR	M1GNM	0.0091	0.00	0.00								
UNBUNDLED CENTREX PORT/LOOP COMBINATIONS - COST BASED RATES																
	UNE-P CENTREX - 1AESS - (Valid in AL,FL,GA,KY,LA,MS,&TN only)															
	2-Wire VG Loop/2-Wire Voice Grade Port (Centrex) Combo															
	UNE Port/Loop Combination Rates (Non-Design)															
	2-Wire VG Loop/2-Wire Voice Grade Port (Centrex) Port Combo - Non-Design					11.94										
	2-Wire VG Loop/2-Wire Voice Grade Port (Centrex)Port Combo - Non-Design					16.05										
	2-Wire VG Loop/2-Wire Voice Grade Port (Centrex)Port Combo - Non-Design					26.80										
	UNE Port/Loop Combination Rates (Design)															
	2-Wire VG Loop/2-Wire Voice Grade Port (Centrex) Port Combo - Design					14.41										
	2-Wire VG Loop/2-Wire Voice Grade Port (Centrex)Port Combo - Design					19.57										
	2-Wire VG Loop/2-Wire Voice Grade Port (Centrex)Port Combo - Design					33.04										
	UNE Loop Rate															
	2-Wire Voice Grade Loop (SL 1) - Zone 1		1	UEP91	UECS1	9.77										
	2-Wire Voice Grade Loop (SL 1) - Zone 2		2	UEP91	UECS1	13.88										
	2-Wire Voice Grade Loop (SL 1) - Zone 3		3	UEP91	UECS1	24.63										
	2-Wire Voice Grade Loop (SL 2) - Zone 1		1	UEP91	UECS2	12.24										
	2-Wire Voice Grade Loop (SL 2) - Zone 2		2	UEP91	UECS2	17.40										
	2-Wire Voice Grade Loop (SL 2) - Zone 3		3	UEP91	UECS2	30.87										
	UNE Ports															
	All States (Except North Carolina and Sout Carolina)															
	2-Wire Voice Grade Port (Centrex) Basic Local Area			UEP91	UEPYA	2.17	53.31	26.46	27.50	8.37						
	2-Wire Voice Grade Port (Centrex 800 termination)Basic Local Area			UEP91	UEPYB	2.17	53.31	26.46	27.50	8.37						
	2-Wire Voice Grade Port (Centrex with Caller ID)Note1 Basic Local Area			UEP91	UEPYH	2.17	53.31	26.46	27.50	8.37						
	2-Wire Voice Grade Port (Centrex from diff Serving Wire Center) Note 2, 3 Basic Local Area			UEP91	UEPYM	2.17	139.49	86.10	65.41	13.81						
	2-Wire Voice Grade Port, Diff Serving Wire Center - 800 Service Term - Basic Local Area			UEP91	UEPYZ	2.17	139.49	86.10	65.41	13.81						
	2-Wire Voice Grade Port terminated in on Megalink or equivalent - Basic Local Area			UEP91	UEPY9	2.17	53.31	26.46	27.50	8.37						
	2-Wire Voice Grade Port Terminated on 800 Service Term - Basic Local Area			UEP91	UEPY2	2.17	53.31	26.46	27.50	8.37						
	Georgia and Florida Only					2.17										
	2-Wire Voice Grade Port (Centrex)			UEP91	UEPHA	2.17	53.31	26.46	27.50	8.37						
	2-Wire Voice Grade Port (Centrex 800 termination)			UEP91	UEPHB	2.17	53.31	26.46	27.50	8.37						
	2-Wire Voice Grade Port (Centrex with Caller ID)1			UEP91	UEPHH	2.17	53.31	26.46	27.50	8.37						
	2-Wire Voice Grade Port (Centrex from diff Serving Wire Center)2,3			UEP91	UEPHM	2.17	139.49	86.10	65.41	13.81						

UNBUNDLED NETWORK ELEMENTS - Florida

Attachment: 2 Ex. A

CATEGORY	RATE ELEMENTS	Interim	Zone	BCS	USOC	RATES ($) Rec	Nonrecurring First	Nonrecurring Add'l	Nonrecurring Disconnect First	Nonrecurring Disconnect Add'l	Svc Order Submitted Elec per LSR (OSS Rates ($)) SOMEC	Svc Order Submitted Manually per LSR (OSS Rates ($)) SOMAN	Incremental Charge - Manual Svc Order vs. Electronic-1st (OSS Rates ($)) SOMAN	Incremental Charge - Manual Svc Order vs. Electronic-Add'l (OSS Rates ($)) SOMAN	Incremental Charge - Manual Svc Order vs. Electronic-Disc 1st (OSS Rates ($)) SOMAN	Incremental Charge - Manual Svc Order vs. Electronic-Disc Add'l (OSS Rates ($)) SOMAN
	2-Wire Voice Grade Port, Diff Serving Wire Center 2,3 - 800 Service Term			UEP91	UEPHZ	2.17	139.49	86.10	65.41	13.81						
	2-Wire Voice Grade Port terminated in on Megalink or equivalent			UEP91	UEPH9	2.17	53.31	26.46	27.50	8.37						
	2-Wire Voice Grade Port Terminated on 800 Service Term			UEP91	UEPH2	2.17	53.31	26.46	27.50	8.37						
Local Switching																
	Centrex Intercom Funtionality, per port			UEP91	URECS	0.7384										
Features																
	All Standard Features Offered, per port			UEP91	UEPVF	2.26										
	All Select Features Offered, per port			UEP91	UEPVS	0.00	370.70									
	All Centrex Control Features Offered, per port			UEP91	UEPVC	2.26										
NARS																
	Unbundled Network Access Register - Combination			UEP91	UARCX	0.00	0.00	0.00	0.00	0.00						
	Unbundled Network Access Register - Indial			UEP91	UAR1X	0.00	0.00	0.00	0.00	0.00						
	Unbundled Network Access Register - Outdial			UEP91	UAROX	0.00	0.00	0.00	0.00	0.00						
Miscellaneous Terminations																
2-Wire Trunk Side																
	Trunk Side Terminations, each			UEP91	CENA6	8.73										
Interoffice Channel Mileage - 2-Wire																
	Interoffice Channel Facilities Termination - Voice Grade			UEP91	M1GBC	25.32										
	Interoffice Channel mileage, per mile or fraction of mile			UEP91	M1GBM	0.0091										
Feature Activations (DS0) Centrex Loops on Channelized DS1 Service																
D4 Channel Bank Feature Activations																
	Feature Activation on D-4 Channel Bank Centrex Loop Slot			UEP91	1PQWS	0.66										
	Feature Activation on D-4 Channel Bank FX line Side Loop Slot			UEP91	1PQW6	0.66										
	Feature Activation on D-4 Channel Bank FX Trunk Side Loop Slot			UEP91	1PQW7	0.66										
	Feature Activation on D-4 Channel Bank Centrex Loop Slot - Different Wire Center			UEP91	1PQWP	0.66										
	Feature Activation on D-4 Channel Bank Private Line Loop Slot			UEP91	1PQWV	0.66										
	Feature Activation on D-4 Channel Bank Tjie Line/Trunk Loop Slot			UEP91	1PQWQ	0.66										
	Feature Activation on D-4 Channel Bank WATS Loop Slot			UEP91	1PQWA	0.66										
Non-Recurring Charges (NRC) Associated with UNE-P Centrex																
	Conversion - Currently Combined Switch-As-Is with allowed changes, per port			UEP91	USAC2		21.50	8.42								
	Conversion of Existing Centrex Common Block			UEP91	USACN		5.17	8.32								
	New Centrex Standard Common Block			UEP91	M1ACS	0.00	618.82									
	New Centrex Customized Common Block			UEP91	M1ACC	0.00	618.82									
	Secondary Block, per Block			UEP91	M2CC1	0.00	71.31									
	NAR Establishment Charge, Per Occasion			UEP91	URECA	0.00	66.48									
UNE-P CENTREX - 5ESS (Valid in All States)																
2-Wire VG Loop/2-Wire Voice Grade Port (Centrex) Combo																
UNE Port/Loop Combination Rates (Non-Design)																
	2-Wire VG Loop/2-Wire Voice Grade Port (Centrex) Port Combo - Non-Design					11.94										
	2-Wire VG Loop/2-Wire Voice Grade Port (Centrex)Port Combo - Non-Design					16.05										
	2-Wire VG Loop/2-Wire Voice Grade Port (Centrex)Port Combo - Non-Design					26.80										
UNE Port/Loop Combination Rates (Design)																
	2-Wire VG Loop/2-Wire Voice Grade Port (Centrex) Port Combo - Design					14.41										
	2-Wire VG Loop/2-Wire Voice Grade Port (Centrex)Port Combo - Design					19.57										
	2-Wire VG Loop/2-Wire Voice Grade Port (Centrex)Port Combo - Design					33.04										
UNE Loop Rate																
	2-Wire Voice Grade Loop (SL 1) - Zone 1		1	UEP95	UECS1	9.77										
	2-Wire Voice Grade Loop (SL 1) - Zone 2		2	UEP95	UECS1	13.88										
	2-Wire Voice Grade Loop (SL 1) - Zone 3		3	UEP95	UECS1	24.63										
	2-Wire Voice Grade Loop (SL 2) - Zone 1		1	UEP95	UECS2	12.24										

UNBUNDLED NETWORK ELEMENTS - Florida

Attachment: 2 Ex. A

CATEGORY	RATE ELEMENTS	Interim	Zone	BCS	USOC	RATES ($)					Svc Order Submitted Elec per LSR	Svc Order Submitted Manually per LSR	Incremental Charge - Manual Svc Order vs. Electronic-1st	Incremental Charge - Manual Svc Order vs. Electronic-Add'l	Incremental Charge - Manual Svc Order vs. Electronic-Disc 1st	Incremental Charge - Manual Svc Order vs. Electronic-Disc Add'l
						Rec	Nonrecurring		Nonrecurring Disconnect		OSS Rates ($)					
							First	Add'l	First	Add'l	SOMEC	SOMAN	SOMAN	SOMAN	SOMAN	SOMAN
	2-Wire Voice Grade Loop (SL 2) - Zone 2		2	UEP95	UECS2	17.40										
	2-Wire Voice Grade Loop (SL 2) - Zone 3		3	UEP95	UECS2	30.87										
UNE Port Rate																
All States																
	2-Wire Voice Grade Port (Centrex) Basic Local Area			UEP95	UEPYA	2.17	53.31	26.46	27.50	8.37						
	2-Wire Voice Grade Port (Centrex 800 termination)			UEP95	UEPYB	2.17	53.31	26.46	27.50	8.37						
	2-Wire Voice Grade Port (Centrex with Caller ID)1Basic Local Area			UEP95	UEPYH	2.17	53.31	26.46	27.50	8.37						
	2-Wire Voice Grade Port (Centrex from diff Serving Wire Center)2,3 Basic Local Area			UEP95	UEPYM	2.17	139.49	86.10	65.41	13.81						
	2-Wire Voice Grade Port, Diff Serving Wire Center 2,3 - 800 Service Term - Basic Local Area			UEP95	UEPYZ	2.17	139.49	86.10	65.41	13.81						
	2-Wire Voice Grade Port terminated in on Megalink or equivalent - Basic Local Area			UEP95	UEPY9	2.17	53.31	26.46	27.50	8.37						
	2-Wire Voice Grade Port Terminated on 800 Service Term - Basic Local Area			UEP95	UEPY2	2.17	53.31	26.46	27.50	8.37						
AL, KY, LA, MS, SC, & TN Only						2.17										
FL & GA Only						2.17										
	2-Wire Voice Grade Port (Centrex)			UEP95	UEPHA	2.17	53.31	26.46	27.50	8.37						
	2-Wire Voice Grade Port (Centrex 800 termination)			UEP95	UEPHB	2.17	53.31	26.46	27.50	8.37						
	2-Wire Voice Grade Port (Centrex with Caller ID)1			UEP95	UEPHH	2.17	53.31	26.46	27.50	8.37						
	2-Wire Voice Grade Port (Centrex from diff Serving Wire Center)2,3			UEP95	UEPHM	2.17	139.49	86.10	65.41	13.81						
	2-Wire Voice Grade Port, Diff Serving Wire Center - 800 Service Term 2,3			UEP95	UEPHZ	2.17	139.49	86.10	65.41	13.81						
	2-Wire Voice Grade Port terminated in on Megalink or equivalent			UEP95	UEPH9	2.17	53.31	26.46	27.50	8.37						
	2-Wire Voice Grade Port Terminated on 800 Service Term			UEP95	UEPH2	2.17	53.31	26.46	27.50	8.37						
Local Switching																
	Centrex Intercom Funtionality, per port			UEP95	URECS	0.7384										
Features																
	All Standard Features Offered, per port			UEP95	UEPVF	2.26										
	All Select Features Offered, per port			UEP95	UEPVS	0.00	370.70									
	All Centrex Control Features Offered, per port			UEP95	UEPVC	2.26										
NARS																
	Unbundled Network Access Register - Combination			UEP95	UARCX	0.00	0.00	0.00	0.00	0.00						
	Unbundled Network Access Register - Indial			UEP95	UAR1X	0.00	0.00	0.00	0.00	0.00						
	Unbundled Network Access Register - Outdial			UEP95	UAROX	0.00	0.00	0.00	0.00	0.00						
Miscellaneous Terminations																
2-Wire Trunk Side																
	Trunk Side Terminations, each			UEP95	CEND6	8.73										
4-Wire Digital (1.544 Megabits)																
	DS1 Circuit Terminations, each			UEP95	M1HD1	54.95										
	DS0 Channels Activated, each			UEP95	M1HDO	0.00	15.69									
Interoffice Channel Mileage - 2-Wire																
	Interoffice Channel Facilities Termination			UEP95	M1GBC	25.32										
	Interoffice Channel mileage, per mile or fraction of mile			UEP95	M1GBM	0.0091										
Feature Activations (DS0) Centrex Loops on Channelized DS1 Service																
D4 Channel Bank Feature Activations																
	Feature Activation on D-4 Channel Bank Centrex Loop Slot			UEP95	1PQWS	0.66										
	Feature Activation on D-4 Channel Bank FX line Side Loop Slot			UEP95	1PQW6	0.66										
	Feature Activation on D-4 Channel Bank FX Trunk Side Loop Slot			UEP95	1PQW7	0.66										
	Feature Activation on D-4 Channel Bank Centrex Loop Slot - Different Wire Center			UEP95	1PQWP	0.66										
	Feature Activation on D-4 Channel Bank Private Line Loop Slot			UEP95	1PQWV	0.66										
	Feature Activation on D-4 Channel Bank Tjie Line/Trunk Loop Slot			UEP95	1PQWQ	0.66										
	Feature Activation on D-4 Channel Bank WATS Loop Slot			UEP95	1PQWA	0.66										
Non-Recurring Charges (NRC) Associated with UNE-P Centrex																
	NRC Conversion Currently Combined Switch-As-Is with allowed changes, per port			UEP95	USAC2	0.00	21.50	8.42								

CATEGORY	RATE ELEMENTS	Interim	Zone	BCS	USOC	RATES ($)					Svc Order Submitted Elec per LSR	Svc Order Submitted Manually per LSR	Incremental Charge - Manual Svc Order vs. Electronic-1st	Incremental Charge - Manual Svc Order vs. Electronic-Add'l	Incremental Charge - Manual Svc Order vs. Electronic-Disc 1st	Incremental Charge - Manual Svc Order vs. Electronic-Disc Add'l
						Rec	Nonrecurring		Nonrecurring Disconnect		OSS Rates ($)					
							First	Add'l	First	Add'l	SOMEC	SOMAN	SOMAN	SOMAN	SOMAN	SOMAN
	Conversion of Existing Centrex Common Block, each			UEP95	USACN		5.17	8.32								
	New Centrex Standard Common Block			UEP95	M1ACS	0.00	618.82									
	New Centrex Customized Common Block			UEP95	M1ACC	0.00	618.82									
	NAR Establishment Charge, Per Occasion			UEP95	URECA	0.00	66.48									
Additional Non-Recurring Charges (NRC)																
	Unbundled Miscellaneous Rate Element, Tag Loop at End Use Premise			UEP95	URETL		8.33	0.83								
	Unbundled Miscellaneous Rate Element, Tag Design Loop at End Use Premise			UEP95	URETN		11.21	1.10								
UNE-P CENTREX - DMS100 (Valid in All States)																
2-Wire VG Loop/2-Wire Voice Grade Port (Centrex) Combo																
UNE Port/Loop Combination Rates (Non-Design)																
	2-Wire VG Loop/2-Wire Voice Grade Port (Centrex) Port Combo - Non-Design					11.94										
	2-Wire VG Loop/2-Wire Voice Grade Port (Centrex)Port Combo - Non-Design					16.05										
	2-Wire VG Loop/2-Wire Voice Grade Port (Centrex)Port Combo - Non-Design					26.80										
UNE Port/Loop Combination Rates (Design)																
	2-Wire VG Loop/2-Wire Voice Grade Port (Centrex) Port Combo - Design					14.41										
	2-Wire VG Loop/2-Wire Voice Grade Port (Centrex)Port Combo - Design					19.57										
	2-Wire VG Loop/2-Wire Voice Grade Port (Centrex)Port Combo - Design					33.04										
UNE Loop Rate																
	2-Wire Voice Grade Loop (SL 1) - Zone 1		1	UEP9D	UECS1	9.77										
	2-Wire Voice Grade Loop (SL 1) - Zone 2		2	UEP9D	UECS1	13.88										
	2-Wire Voice Grade Loop (SL 1) - Zone 3		3	UEP9D	UECS1	24.63										
	2-Wire Voice Grade Loop (SL 2) - Zone 1		1	UEP9D	UECS2	12.24										
	2-Wire Voice Grade Loop (SL 2) - Zone 2		2	UEP9D	UECS2	17.40										
	2-Wire Voice Grade Loop (SL 2) - Zone 3		3	UEP9D	UECS2	30.87										
UNE Port Rate																
ALL STATES																
	2-Wire Voice Grade Port (Centrex) Basic Local Area			UEP9D	UEPYA	2.17										
	2-Wire Voice Grade Port (Centrex 800 termination)Basic Local Area			UEP9D	UEPYB	2.17	53.31	26.46	27.50	8.37						
	2-Wire Voice Grade Port (Centrex / EBS-PSET)3Basic Local Area			UEP9D	UEPYC	2.17	53.31	26.46	27.50	8.37						
	2-Wire Voice Grade Port (Centrex / EBS-M5009)3Basic Local Area			UEP9D	UEPYD	2.17	53.31	26.46	27.50	8.37						
	2-Wire Voice Grade Port (Centrex / EBS-M5209))3 Basic Local Area			UEP9D	UEPYE	2.17	53.31	26.46	27.50	8.37						
	2-Wire Voice Grade Port (Centrex / EBS-M5112))3 Basic Local Area			UEP9D	UEPYF	2.17	53.31	26.46	27.50	8.37						
	2-Wire Voice Grade Port (Centrex / EBS-M5312))3Basic Local Area			UEP9D	UEPYG	2.17	53.31	26.46	27.50	8.37						
	2-Wire Voice Grade Port (Centrex / EBS-M5008))3 Basic Local Area			UEP9D	UEPYT	2.17	53.31	26.46	27.50	8.37						
	2-Wire Voice Grade Port (Centrex / EBS-M5208))3 Basic Local Area			UEP9D	UEPYU	2.17	53.31	26.46	27.50	8.37						
	2-Wire Voice Grade Port (Centrex / EBS-M5216))3 Basic Local Area			UEP9D	UEPYV	2.17	53.31	26.46	27.50	8.37						
	2-Wire Voice Grade Port (Centrex / EBS-M5316))3 Basic Local Area			UEP9D	UEPY3	2.17	53.31	26.46	27.50	8.37						
	2-Wire Voice Grade Port (Centrex with Caller ID) Basic Local Area			UEP9D	UEPYH	2.17	53.31	26.46	27.50	8.37						
	2-Wire Voice Grade Port (Centrex/Caller ID/Msg Wtg Lamp Indication))4 Basic Local Area			UEP9D	UEPYW	2.17	53.31	26.46	27.50	8.37						
	2-Wire Voice Grade Port (Centrex/Msg Wtg Lamp Indication))4 Basic Local Area			UEP9D	UEPYJ	2.17	53.31	26.46	27.50	8.37						
	2-Wire Voice Grade Port (Centrex from diff Serving Wire Center) 2,3-Basic Local Area			UEP9D	UEPYM	2.17	53.31	26.46	27.50	8.37						

UNBUNDLED NETWORK ELEMENTS - Florida

Attachment: 2 Ex. A

CATEGORY	RATE ELEMENTS	Interim	Zone	BCS	USOC	RATES ($)					Svc Order Submitted Elec per LSR	Svc Order Submitted Manually per LSR	Incremental Charge - Manual Svc Order vs. Electronic-1st	Incremental Charge - Manual Svc Order vs. Electronic-Add'l	Incremental Charge - Manual Svc Order vs. Electronic-Disc 1st	Incremental Charge - Manual Svc Order vs. Electronic-Disc Add'l
						Rec	Nonrecurring		Nonrecurring Disconnect		OSS Rates ($)					
							First	Add'l	First	Add'l	SOMEC	SOMAN	SOMAN	SOMAN	SOMAN	SOMAN
	2-Wire Voice Grade Port (Centrex/differ SWC /EBS-PSET)2,3,4 Basic Local Area			UEP9D	UEPYO	2.17	53.31	26.46	27.50	8.37						
	2-Wire Voice Grade Port (Centrex/differ SWC /EBS-M5009)2,3,4 Basic Local Area			UEP9D	UEPYP	2.17	53.31	26.46	27.50	8.37						
	2-Wire Voice Grade Port (Centrex/differ SWC /EBS-5209)2,3,4 Basic Local Area			UEP9D	UEPYQ	2.17	139.49	86.10	65.41	13.81						
	2-Wire Voice Grade Port (Centrex/differ SWC /EBS-M5112)2,3,4 Basic Local Area			UEP9D	UEPYR	2.17	139.49	86.10	65.41	13.81						
	2-Wire Voice Grade Port (Centrex/differ SWC /EBS-M5312)2,3,4 Basic Local Area			UEP9D	UEPYS	2.17	139.49	86.10	65.41	13.81						
	2-Wire Voice Grade Port (Centrex/differ SWC /EBS-M5008)2,3,4 Basic Local Area			UEP9D	UEPY4	2.17	139.49	86.10	65.41	13.81						
	2-Wire Voice Grade Port (Centrex/differ SWC /EBS-M5208)2, 3 Basic Local Area			UEP9D	UEPY5	2.17	139.49	86.10	65.41	13.81						
	2-Wire Voice Grade Port (Centrex/differ SWC /EBS-M5216)2,3,4 Basic Local Area			UEP9D	UEPY6	2.17	139.49	86.10	65.41	13.81						
	2-Wire Voice Grade Port (Centrex/differ SWC /EBS-M5316)2,3,4 Basic Local Area			UEP9D	UEPY7	2.17	139.49	86.10	65.41	13.81						
	2-Wire Voice Grade Port, Diff Serving Wire Center - 800 Service Term 2,3			UEP9D	UEPYZ	2.17	139.49	86.10	65.41	13.81						
	2-Wire Voice Grade Port terminated in on Megalink or equivalent Basic Local Area			UEP9D	UEPY9	2.17	53.31	26.46	27.50	8.37						
	2-Wire Voice Grade Port Terminated on 800 Service Term Basic Local Area			UEP9D	UEPY2	2.17	53.31	26.46	27.50	8.37						
FL & GA Only						2.17										
	2-Wire Voice Grade Port (Centrex)			UEP9D	UEPHA	2.17	53.31	26.46	27.50	8.37						
	2-Wire Voice Grade Port (Centrex 800 termination)			UEP9D	UEPHB	2.17	53.31	26.46	27.50	8.37						
	2-Wire Voice Grade Port (Centrex / EBS-PSET)4			UEP9D	UEPHC	2.17	53.31	26.46	27.50	8.37						
	2-Wire Voice Grade Port (Centrex / EBS-M5009)4			UEP9D	UEPHD	2.17	53.31	26.46	27.50	8.37						
	2-Wire Voice Grade Port (Centrex / EBS-M5209)4			UEP9D	UEPHE	2.17	53.31	26.46	27.50	8.37						
	2-Wire Voice Grade Port (Centrex / EBS-M5112)4			UEP9D	UEPHF	2.17	53.31	26.46	27.50	8.37						
	2-Wire Voice Grade Port (Centrex / EBS-M5312)4			UEP9D	UEPHG	2.17	53.31	26.46	27.50	8.37						
	2-Wire Voice Grade Port (Centrex / EBS-M5008)4			UEP9D	UEPHT	2.17	53.31	26.46	27.50	8.37						
	2-Wire Voice Grade Port (Centrex / EBS-M5208)4			UEP9D	UEPHU	2.17	53.31	26.46	27.50	8.37						
	2-Wire Voice Grade Port (Centrex / EBS-M5216)4			UEP9D	UEPHV	2.17	53.31	26.46	27.50	8.37						
	2-Wire Voice Grade Port (Centrex / EBS-M5316)4			UEP9D	UEPH3	2.17	53.31	26.46	27.50	8.37						
	2-Wire Voice Grade Port (Centrex with Caller ID)			UEP9D	UEPHH	2.17	53.31	26.46	27.50	8.37						
	2-Wire Voice Grade Port (Centrex/Caller ID/Msg Wtg Lamp Indication)4			UEP9D	UEPHW	2.17	53.31	26.46	27.50	8.37						
	2-Wire Voice Grade Port (Centrex/Msg Wtg Lamp Indication)4			UEP9D	UEPHJ	2.17	53.31	26.46	27.50	8.37						
	2-Wire Voice Grade Port (Centrex from diff Serving Wire Center) 2,3			UEP9D	UEPHM	2.17	139.49	86.10	65.41	13.81						
	2-Wire Voice Grade Port (Centrex/differ SWC /EBS-PSET)2,3,4			UEP9D	UEPHO	2.17	139.49	86.10	65.41	13.81						
	2-Wire Voice Grade Port (Centrex/differ SWC /EBS-M5009)2,3,4			UEP9D	UEPHP	2.17	139.49	86.10	65.41	13.81						
	2-Wire Voice Grade Port (Centrex/differ SWC /EBS-5209)2,3,4			UEP9D	UEPHQ	2.17	139.49	86.10	65.41	13.81						
	2-Wire Voice Grade Port (Centrex/differ SWC /EBS-M5112)2,3,4			UEP9D	UEPHR	2.17	139.49	86.10	65.41	13.81						
	2-Wire Voice Grade Port (Centrex/differ SWC /EBS-M5312)2, 3,4			UEP9D	UEPHS	2.17	139.49	86.10	65.41	13.81						
	2-Wire Voice Grade Port (Centrex/differ SWC /EBS-M5008)2,3,4			UEP9D	UEPH4	2.17	139.49	86.10	65.41	13.81						
	2-Wire Voice Grade Port (Centrex/differ SWC /EBS-M5208)2,3,4			UEP9D	UEPH5	2.17	139.49	86.10	65.41	13.81						
	2-Wire Voice Grade Port (Centrex/differ SWC /EBS-M5216)2,3,4			UEP9D	UEPH6	2.17	139.49	86.10	65.41	13.81						
	2-Wire Voice Grade Port (Centrex/differ SWC /EBS-M5316)2,3,4			UEP9D	UEPH7	2.17	139.49	86.10	65.41	13.81						
	2-Wire Voice Grade Port, Diff Serving Wire Center - 800 Service Term 2,3			UEP9D	UEPHZ	2.17	139.49	86.10	65.41	13.81						
	2-Wire Voice Grade Port terminated in on Megalink or equivalent			UEP9D	UEPH9	2.17	53.31	26.46	27.50	8.37						

UNBUNDLED NETWORK ELEMENTS - Florida

Attachment: 2 Ex. A

CATEGORY	RATE ELEMENTS	Interim	Zone	BCS	USOC	RATES ($)					Svc Order Submitted Elec per LSR	Svc Order Submitted Manually per LSR	Incremental Charge - Manual Svc Order vs. Electronic-1st	Incremental Charge - Manual Svc Order vs. Electronic-Add'l	Incremental Charge - Manual Svc Order vs. Electronic-Disc 1st	Incremental Charge - Manual Svc Order vs. Electronic-Disc Add'l
						Rec	Nonrecurring		Nonrecurring Disconnect		OSS Rates ($)					
							First	Add'l	First	Add'l	SOMEC	SOMAN	SOMAN	SOMAN	SOMAN	SOMAN
	2-Wire Voice Grade Port Terminated on 800 Service Term			UEP9D	UEPH2	2.17	53.31	26.46	27.50	8.37						
Local Switching																
	Centrex Intercom Funtionality, per port			UEP9D	URECS	0.7384										
Features																
	All Standard Features Offered, per port			UEP9D	UEPVF	2.26										
	All Select Features Offered, per port			UEP9D	UEPVS	0.00	370.70									
	All Centrex Control Features Offered, per port			UEP9D	UEPVC	2.26										
NARS																
	Unbundled Network Access Register - Combination			UEP9D	UARCX	0.00	0.00	0.00	0.00	0.00						
	Unbundled Network Access Register - Inward			UEP9D	UAR1X	0.00	0.00	0.00	0.00	0.00						
	Unbundled Network Access Register - Outdial			UEP9D	UAROX	0.00	0.00	0.00	0.00	0.00						
Miscellaneous Terminations																
2-Wire Trunk Side																
	Trunk Side Terminations, each			UEP9D	CEND6	8.73										
4-Wire Digital (1.544 Megabits)																
	DS1 Circuit Terminations, each			UEP9D	M1HD1	54.95										
	DS0 Channels Activiated per Channel			UEP9D	M1HDO	0.00	15.69									
Interoffice Channel Mileage - 2-Wire																
	Interoffice Channel Facilities Termination			UEP9D	M1GBC	25.32										
	Interoffice Channel mileage, per mile or fraction of mile			UEP9D	M1GBM	0.0091										
Feature Activations (DS0) Centrex Loops on Channelized DS1 Service																
D4 Channel Bank Feature Activations																
	Feature Activation on D-4 Channel Bank Centrex Loop Slot			UEP9D	1PQWS	0.66										
	Feature Activation on D-4 Channel Bank FX line Side Loop Slot			UEP9D	1PQW6	0.66										
	Feature Activation on D-4 Channel Bank FX Trunk Side Loop Slot			UEP9D	1PQW7	0.66										
	Feature Activation on D-4 Channel Bank Centrex Loop Slot - Different Wire Center			UEP9D	1PQWP	0.66										
	Feature Activation on D-4 Channel Bank Private Line Loop Slot			UEP9D	1PQWV	0.66										
	Feature Activation on D-4 Channel Bank Tjie Line/Trunk Loop Slot			UEP9D	1PQWQ	0.66										
	Feature Activation on D-4 Channel Bank WATS Loop Slot			UEP9D	1PQWA	0.66										
Non-Recurring Charges (NRC) Associated with UNE-P Centrex																
	NRC Conversion Currently Combined Switch-As-Is with allowed changes, per port			UEP9D	USAC2		21.50	8.42								
	Conversion of existing Centrex Common Block, each			UEP9D	USACN		5.17	8.32								
	New Centrex Standard Common Block			UEP9D	M1ACS	0.00	618.82									
	New Centrex Customized Common Block			UEP9D	M1ACC	0.00	618.82									
	NAR Establishment Charge, Per Occasion			UEP9D	URECA	0.00	66.48									
Additional Non-Recurring Charges (NRC)																
	Unbundled Miscellaneous Rate Element, Tag Loop at End Use Premise			UEP9D	URETL		8.33	0.83								
	Unbundled Miscellaneous Rate Element, Tag Design Loop at End Use Premise			UEP9D	URETN		11.21	1.10								
UNE-P CENTREX - EWSD (Valid in AL, FL, KY, LA, MS & TN)																
2-Wire VG Loop/2-Wire Voice Grade Port (Centrex) Combo																
UNE Port/Loop Combination Rates (Non-Design)																
	2-Wire VG Loop/2-Wire Voice Grade Port (Centrex) Port Combo - Non-Design					11.94										
	2-Wire VG Loop/2-Wire Voice Grade Port (Centrex)Port Combo - Non-Design					16.05										
	2-Wire VG Loop/2-Wire Voice Grade Port (Centrex)Port Combo - Non-Design					26.80										
UNE Port/Loop Combination Rates (Design)																
	2-Wire VG Loop/2-Wire Voice Grade Port (Centrex) Port Combo - Design					14.41										
	2-Wire VG Loop/2-Wire Voice Grade Port (Centrex)Port Combo - Design					19.57										
	2-Wire VG Loop/2-Wire Voice Grade Port (Centrex)Port Combo - Design					33.04										
UNE Loop Rate																
	2-Wire Voice Grade Loop (SL 1) - Zone 1		1	UEP9E	UECS1	9.77										

UNBUNDLED NETWORK ELEMENTS - Florida

Attachment: 2 Ex. A

CATEGORY	RATE ELEMENTS	Interim	Zone	BCS	USOC	RATES ($)					Svc Order Submitted Elec per LSR	Svc Order Submitted Manually per LSR	Incremental Charge - Manual Svc Order vs. Electronic-1st	Incremental Charge - Manual Svc Order vs. Electronic-Add'l	Incremental Charge - Manual Svc Order vs. Electronic-Disc 1st	Incremental Charge - Manual Svc Order vs. Electronic-Disc Add'l
						Rec	Nonrecurring		Nonrecurring Disconnect		OSS Rates ($)					
							First	Add'l	First	Add'l	SOMEC	SOMAN	SOMAN	SOMAN	SOMAN	SOMAN
	2-Wire Voice Grade Loop (SL 1) - Zone 2		2	UEP9E	UECS1	13.88										
	2-Wire Voice Grade Loop (SL 1) - Zone 3		3	UEP9E	UECS1	24.63										
	2-Wire Voice Grade Loop (SL 2) - Zone 1		1	UEP9E	UECS2	12.24										
	2-Wire Voice Grade Loop (SL 2) - Zone 2		2	UEP9E	UECS2	17.40										
	2-Wire Voice Grade Loop (SL 2) - Zone 3		3	UEP9E	UECS2	30.87										
UNE Port Rate																
AL, FL, KY, LA, MS, & TN only																
	2-Wire Voice Grade Port (Centrex) Basic Local Area			UEP9E	UEPYA	2.17	53.31	26.46	27.50	8.37						
	2-Wire Voice Grade Port (Centrex 800 termination)Basic Local Area			UEP9E	UEPYB	2.17	53.31	26.46	27.50	8.37						
	2-Wire Voice Grade Port (Centrex with Caller ID)1Basic Local Area			UEP9E	UEPYH	2.17	53.31	26.46	27.50	8.37						
	2-Wire Voice Grade Port (Centrex from diff Serving Wire Center)2,3 Basic Local Area			UEP9E	UEPYM	2.17	139.49	86.10	65.41	13.81						
	2-Wire Voice Grade Port, Diff Serving Wire Center 2,3 - 800 Service Term - Basic Local Area			UEP9E	UEPYZ	2.17	139.49	86.10	65.41	13.81						
	2-Wire Voice Grade Port terminated in on Megalink or equivalent - Basic Local Area			UEP9E	UEPY9	2.17	53.31	26.46	27.50	8.37						
	2-Wire Voice Grade Port Terminated on 800 Service Term - Basic Local Area			UEP9E	UEPY2	2.17	53.31	26.46	27.50	8.37						
Florida Only						2.17										
	2-Wire Voice Grade Port (Centrex)			UEP9E	UEPHA	2.17	53.31	26.46	27.50	8.37						
	2-Wire Voice Grade Port (Centrex 800 termination)			UEP9E	UEPHB	2.17	53.31	26.46	27.50	8.37						
	2-Wire Voice Grade Port (Centrex with Caller ID)1			UEP9E	UEPHH	2.17	53.31	26.46	27.50	8.37						
	2-Wire Voice Grade Port (Centrex from diff Serving Wire Center)2,3			UEP9E	UEPHM	2.17	139.49	86.10	65.41	13.81						
	2-Wire Voice Grade Port, Diff Serving Wire Center - 800 Service Term 2,3			UEP9E	UEPHZ	2.17	139.49	86.10	65.41	13.81						
	2-Wire Voice Grade Port terminated in on Megalink or equivalent			UEP9E	UEPH9	2.17	53.31	26.46	27.50	8.37						
	2-Wire Voice Grade Port Terminated on 800 Service Term			UEP9E	UEPH2	2.17	53.31	26.46	27.50	8.37						
Local Switching																
	Centrex Intercom Funtionality, per port			UEP9E	URECS	0.7384										
Features																
	All Standard Features Offered, per port			UEP9E	UEPVF	2.26										
	All Select Features Offered, per port			UEP9E	UEPVS	0.00	370.70									
	All Centrex Control Features Offered, per port			UEP9E	UEPVC	2.26										
NARS																
	Unbundled Network Access Register - Combination			UEP9E	UARCX	0.00	0.00	0.00	0.00	0.00						
	Unbundled Network Access Register - Indial			UEP9E	UAR1X	0.00	0.00	0.00	0.00	0.00						
	Unbundled Network Access Register - Outdial			UEP9E	UAROX	0.00	0.00	0.00	0.00	0.00						
Miscellaneous Terminations																
2-Wire Trunk Side																
	Trunk Side Terminations, each			UEP9E	CEND6	8.73										
4-Wire Digital (1.544 Megabits)																
	DS1 Circuit Terminations, each			UEP9E	M1HD1	54.95										
	DS0 Channel Activated Per Channel			UEP9E	M1HDO	0.00	15.69									
Interoffice Channel Mileage - 2-Wire																
	Interoffice Channel Facilities Termination			UEP9E	M1GBC	25.32										
	Interoffice Channel mileage, per mile or fraction of mile			UEP9E	M1GBM	0.0091										
Feature Activations (DS0) Centrex Loops on Channelized DS1 Service																
D4 Channel Bank Feature Activations																
	Feature Activation on D-4 Channel Bank Centrex Loop Slot			UEP9E	1PQWS	0.66										
	Feature Activation on D-4 Channel Bank FX line Side Loop Slot			UEP9E	1PQW6	0.66										
	Feature Activation on D-4 Channel Bank FX Trunk Side Loop Slot			UEP9E	1PQW7	0.66										
	Feature Activation on D-4 Channel Bank Centrex Loop Slot - Different Wire Center			UEP9E	1PQWP	0.66										
	Feature Activation on D-4 Channel Bank Private Line Loop Slot			UEP9E	1PQWV	0.66										
	Feature Activation on D-4 Channel Bank Tjie Line/Trunk Loop Slot			UEP9E	1PQWQ	0.66										
	Feature Activation on D-4 Channel Bank WATS Loop Slot			UEP9E	1PQWA	0.66										

UNBUNDLED NETWORK ELEMENTS - Florida

Attachment: 2 Ex. A

CATEGORY	RATE ELEMENTS	Interim	Zone	BCS	USOC	RATES ($)					Svc Order Submitted Elec per LSR	Svc Order Submitted Manually per LSR	Incremental Charge - Manual Svc Order vs. Electronic-1st	Incremental Charge - Manual Svc Order vs. Electronic-Add'l	Incremental Charge - Manual Svc Order vs. Electronic-Disc 1st	Incremental Charge - Manual Svc Order vs. Electronic-Disc Add'l
						Rec	Nonrecurring		Nonrecurring Disconnect		OSS Rates ($)					
							First	Add'l	First	Add'l	SOMEC	SOMAN	SOMAN	SOMAN	SOMAN	SOMAN
Non-Recurring Charges (NRC) Associated with UNE-P Centrex																
	NRC Conversion Currently Combined Switch-As-Is with allowed changes, per port			UEP9E	USAC2		21.50	8.42								
	Conversion of Existing Centrex Common Block, each			UEP9E	USACN		5.17	8.32								
	New Centrex Standard Common Block			UEP9E	M1ACS	0.00	618.82									
	New Centrex Customized Common Block			UEP9E	M1ACC	0.00	618.82									
	NAR Establishment Charge, Per Occasion			UEP9E	URECA	0.00	66.48									
Additional Non-Recurring Charges (NRC)																
	Unbundled Miscellaneous Rate Element, Tag Loop at End Use Premise			UEP9E	URETL		8.33	0.83								
	Unbundled Miscellaneous Rate Element, Tag Design Loop at End Use Premise			UEP9E	URETN		11.21	1.10								
Note 1 - Required Port for Centrex Control in 1AESS, 5ESS & EWSD																
Note 2 - Requres Interoffice Channel Mileage																
Note 3 - Installation is combination of Installation charge for SL2 Loop and Port																
Note 4 - Requires Specific Customer Premises Equipment																
Note: Rates displaying an "I" in Interim column are interim as a result of a Commission order.																

UNBUNDLED NETWORK ELEMENTS - Georgia

Attachment: 2 Ex. A

CATEGORY	RATE ELEMENTS	Interim	Zone	BCS	USOC	RATES ($)					Svc Order Submitted Elec per LSR	Svc Order Submitted Manually per LSR	Incremental Charge - Manual Svc Order vs. Electronic-1st	Incremental Charge - Manual Svc Order vs. Electronic-Add'l	Incremental Charge - Manual Svc Order vs. Electronic-Disc 1st	Incremental Charge - Manual Svc Order vs. Electronic-Disc Add'l
						Rec	Nonrecurring		Nonrecurring Disconnect		OSS Rates ($)					
							First	Add'l	First	Add'l	SOMEC	SOMAN	SOMAN	SOMAN	SOMAN	SOMAN
	The "Zone" shown in the sections for stand-alone loops or loops as part of a combination refers to Geographically Deaveraged UNE Zones. To view Geographically Deaveraged UNE Zone Designations by Central Office, refer to internet Website: http://www.interconnection.bellsouth.com/become_a_clec/html/interconnection.htm															
OPERATIONAL SUPPORT SYSTEMS (OSS) - "REGIONAL RATES"																
	NOTE: (1) CLEC should contact its contract negotiator if it prefers the "state specific" OSS charges as ordered by the State Commissions. The OSS charges currently contained in this rate exhibit are the BellSouth "regional" service ordering charges. CLEC may elect either the state specific Commission ordered rates for the service ordering charges, or CLEC may elect the regional service ordering charge, however, CLEC can not obtain a mixture of the two regardless if CLEC has a interconnection contract established in each of the 9 states.															
	NOTE: (2) Any element that can be ordered electronically will be billed according to the SOMEC rate listed in this category. Please refer to BellSouth's Local Ordering Handbook (LOH) to determine if a product can be ordered electronically. For those elements that cannot be ordered electronically at present per the LOH, the listed SOMEC rate in this category reflects the charge that would be billed to a CLEC once electronic ordering capabilities come on-line for that element. Otherwise, the manual ordering charge, SOMAN, will be applied to a CLECs bill when it submits an LSR to BellSouth.															
	OSS - Electronic Service Order Charge, Per Local Service Request (LSR) - UNE Only				SOMEC		3.50	0.00	3.50	0.00						
	OSS - Manual Service Order Charge, Per Local Service Request (LSR) - UNE Only				SOMAN		11.73	0.00	6.13	0.00						
UNE SERVICE DATE ADVANCEMENT CHARGE																
	NOTE: The Expedite charge will be maintained commensurate with BellSouth's FCC No.1 Tariff, Section 5 as applicable.															
	UNE Expedite Charge per Circuit or Line Assignable USOC, per Day			UAL, UEANL, UCL, UEF, UDC, UDF, UEQ, UDL, UENTW, UDN, UEA, UHL, ULC, USL, U1T12, U1T48, U1TD1, U1TD3, U1TDX, U1TO3, U1TS1, U1TVX, UC1BC, UC1BL, UC1CC, UC1CL, UC1DC, UC1DL, UC1EC, UC1EL, UC1FC, UC1FL, UC1GC, UC1GL, UC1HC, UC1HL, UDL12, UDL48, UDLO3, UDLSX, UE3, ULD12, ULD48, ULDD1, ULDD3, ULDDX, ULDO3, ULDS1, ULDVX, UNC1X, UNC3X, UNCDX, UNCNX, UNCSX, UNCVX, UNLD1, UNLD3, UXTD1, UXTD3, UXTS1, U1TUC, U1TUD, U1TUB, U1TUA	SDASP		200.00									
ORDER MODIFICATION CHARGE																
	Order Modification Charge (OMC)						26.21	0.00	0.00	0.00						
	Order Modification Additional Dispatch Charge (OMCAD)						150.00	0.00	0.00	0.00						
UNBUNDLED EXCHANGE ACCESS LOOP																
	2-WIRE ANALOG VOICE GRADE LOOP															
	2-Wire Analog Voice Grade Loop - Service Level 1- Zone 1		1	UEANL	UEAL2	10.51	40.02	9.99	5.61	1.72						
	2-Wire Analog Voice Grade Loop - Service Level 1- Zone 2		2	UEANL	UEAL2	15.85	40.02	9.99	5.61	1.72						
	2-Wire Analog Voice Grade Loop - Service Level 1- Zone 3		3	UEANL	UEAL2	31.97	40.02	9.99	5.61	1.72						
	2-Wire Analog Voice Grade Loop - Service Level 1- Zone 1		1	UEANL	UEASL	10.51	40.02	9.99	5.61	1.72						
	2-Wire Analog Voice Grade Loop - Service Level 1- Zone 2		2	UEANL	UEASL	15.85	40.02	9.99	5.61	1.72						
	2-Wire Analog Voice Grade Loop - Service Level 1- Zone 3		3	UEANL	UEASL	31.97	40.02	9.99	5.61	1.72						
	Unbundled Miscellaneous Rate Element, Tag Loop at End User Premise			UEANL	URETL		8.33	0.83								
	Loop Testing - Basic 1st Half Hour			UEANL	URET1		25.12	25.12								
	Loop Testing - Basic Additional Half Hour			UEANL	URETA		13.62	13.62								
	CLEC to CLEC Conversion Charge Without Outside Dispatch (UVL-SL1)			UEANL	UREWO		15.75	8.92								

UNBUNDLED NETWORK ELEMENTS - Georgia

Attachment: 2 Ex. A

CATEGORY	RATE ELEMENTS	Interim	Zone	BCS	USOC	RATES ($)					Svc Order Submitted Elec per LSR	Svc Order Submitted Manually per LSR	Incremental Charge - Manual Svc Order vs. Electronic-1st	Incremental Charge - Manual Svc Order vs. Electronic-Add'l	Incremental Charge - Manual Svc Order vs. Electronic-Disc 1st	Incremental Charge - Manual Svc Order vs. Electronic-Disc Add'l
						Rec	Nonrecurring		Nonrecurring Disconnect		OSS Rates ($)					
							First	Add'l	First	Add'l	SOMEC	SOMAN	SOMAN	SOMAN	SOMAN	SOMAN
	Unbundled Voice Loop, Non-Design Voice Loop, billing for BST providing make-up (Engineering Information - E.I.)			UEANL	UEANM		7.30	7.30								
	Manual Order Coordiantion for UVL-SL1s (per loop)			UEANL	UEAMC		18.92	18.92								
	Order Coordination for Specified Conversion Time for UVL-SL1 (per LSR)			UEANL	OCOSL		57.79									
2-WIRE UNBUNDLED COPPER LOOP - NON-DESIGNED																
	2 Wire Unbundled Copper Loop Non-Designed- Zone 1		1	UEQ	UEQ2X	11.02	44.69	22.40	0.00	0.00						
	2 Wire Unbundled Copper Loop Non-Designed- Zone 2		2	UEQ	UEQ2X	12.72	44.69	22.40	0.00	0.00						
	2 Wire Unbundled Copper Loop Non-Designed-Zone 3		3	UEQ	UEQ2X	20.22	44.69	22.40	0.00	0.00						
	Unbundled Miscellaneous Rate Element, Tag Loop at End User Premise			UEQ	URETL		8.33	0.83								
	Manual Order Coordination 2 Wire Unbundled Copper Loop - Non-Designed (per loop)			UEQ	USBMC		18.92	18.92								
	Unbundled Copper Loop, Non-Design Copper Loop, billing for BST providing make-up (Engineering Information - E.I.)			UEQ	UEQMU		7.30	7.30								
	Loop Testing - Basic 1st Half Hour			UEQ	URET1		25.12	25.12								
	Loop Testing - Basic Additional Half Hour			UEQ	URETA		13.62	13.62								
	CLEC to CLEC Conversion Charge Without Outside Dispatch (UCL-ND)			UEQ	UREWO		14.25	7.42								
UNBUNDLED EXCHANGE ACCESS LOOP																
2-WIRE ANALOG VOICE GRADE LOOP																
UNE Loop Rates for Line Splitting (In Ga. PSC ordered the line splitting loop USOCs match the lower port- loop combo rates UEPLX)																
	2-Wire Voice Grade Loop (SL1) for Line Splitting - Zone 1	I	1	UEPSR UEPSB	UEALS	9.56	10.05	7.36	1.37	1.28						
	2-Wire Voice Grade Loop (SL1) for Line Splitting - Zone 1	I	1	UEPSR UEPSB	UEABS	9.56	10.05	7.36	1.37	1.28						
	2-Wire Voice Grade Loop (SL1) for Line Splitting - Zone 2	I	2	UEPSR UEPSB	UEALS	14.86	10.05	7.36	1.37	1.28						
	2-Wire Voice Grade Loop (SL1) for Line Splitting - Zone 2	I	2	UEPSR UEPSB	UEABS	14.86	10.05	7.36	1.37	1.28						
	2-Wire Voice Grade Loop (SL1)for Line Splitting - Zone 3	I	3	UEPSR UEPSB	UEALS	31.66	10.05	7.36	1.37	1.28						
	2-Wire Voice Grade Loop (SL1)for Line Splitting - Zone 3	I	3	UEPSR UEPSB	UEABS	31.66	10.05	7.36	1.37	1.28						
UNBUNDLED EXCHANGE ACCESS LOOP																
2-WIRE ANALOG VOICE GRADE LOOP																
	2-Wire Analog Voice Grade Loop - Service Level 2 w/Loop or Ground Start Signaling - Zone 1		1	UEA	UEAL2	11.57	79.85	24.65	18.92	7.87						
	2-Wire Analog Voice Grade Loop - Service Level 2 w/Loop or Ground Start Signaling - Zone 2		2	UEA	UEAL2	16.95	79.85	24.65	18.92	7.87						
	2-Wire Analog Voice Grade Loop - Service Level 2 w/Loop or Ground Start Signaling - Zone 3		3	UEA	UEAL2	33.08	79.85	24.65	18.92	7.87						
	Order Coordination for Specified Conversion Time (per LSR)			UEA	OCOSL		57.79									
	2-Wire Analog Voice Grade Loop - Service Level 2 w/Reverse Battery Signaling - Zone 1		1	UEA	UEAR2	11.57	79.85	24.65	18.92	7.87						
	2-Wire Analog Voice Grade Loop - Service Level 2 w/Reverse Battery Signaling - Zone 2		2	UEA	UEAR2	16.95	79.85	24.65	18.92	7.87						
	2-Wire Analog Voice Grade Loop - Service Level 2 w/Reverse Battery Signaling - Zone 3		3	UEA	UEAR2	33.08	79.85	24.65	18.92	7.87						
	Order Coordination for Specified Conversion Time (per LSR)			UEA	OCOSL		57.79									
	CLEC to CLEC Conversion Charge without outside dispatch			UEA	UREWO		87.72	36.36								
	Loop Tagging - Service Level 2 (SL2)			UEA	URETL		11.19	1.10								
4-WIRE ANALOG VOICE GRADE LOOP																
	4-Wire Analog Voice Grade Loop - Zone 1		1	UEA	UEAL4	17.80	93.01	28.17	19.52	8.12						
	4-Wire Analog Voice Grade Loop - Zone 2		2	UEA	UEAL4	21.68	93.01	28.17	19.52	8.12						
	4-Wire Analog Voice Grade Loop - Zone 3		3	UEA	UEAL4	30.25	93.01	28.17	19.52	8.12						
	Order Coordination for Specified Conversion Time (per LSR)			UEA	OCOSL		57.79									
	CLEC to CLEC Conversion Charge without outside dispatch			UEA	UREWO		87.72	36.36								
2-WIRE ISDN DIGITAL GRADE LOOP																
	2-Wire ISDN Digital Grade Loop - Zone 1		1	UDN	U1L2X	21.89	180.06	35.25	18.23	6.97						
	2-Wire ISDN Digital Grade Loop - Zone 2		2	UDN	U1L2X	25.27	180.06	35.25	18.23	6.97						
	2-Wire ISDN Digital Grade Loop - Zone 3		3	UDN	U1L2X	40.17	180.06	35.25	18.23	6.97						
	Order Coordination For Specified Conversion Time (per LSR)			UDN	OCOSL		57.79									
	CLEC to CLEC Conversion Charge without outside dispatch			UDN	UREWO		120.98	33.04								
2-WIRE ASYMMETRICAL DIGITAL SUBSCRIBER LINE (ADSL) COMPATIBLE LOOP																
	2 Wire Unbundled ADSL Loop including manual service inquiry & facility reservation - Zone 1	I	1	UAL	UAL2X	11.23	44.69	31.55	0.00	0.00						
	2 Wire Unbundled ADSL Loop including manual service inquiry & facility reservation - Zone 2	I	2	UAL	UAL2X	12.97	44.69	31.55	0.00	0.00						

UNBUNDLED NETWORK ELEMENTS - Georgia

Attachment: 2 Ex. A

CATEGORY	RATE ELEMENTS	Interim	Zone	BCS	USOC	RATES ($)					Svc Order Submitted Elec per LSR	Svc Order Submitted Manually per LSR	Incremental Charge - Manual Svc Order vs. Electronic-1st	Incremental Charge - Manual Svc Order vs. Electronic-Add'l	Incremental Charge - Manual Svc Order vs. Electronic-Disc 1st	Incremental Charge - Manual Svc Order vs. Electronic-Disc Add'l
						Rec	Nonrecurring		Nonrecurring Disconnect		OSS Rates ($)					
							First	Add'l	First	Add'l	SOMEC	SOMAN	SOMAN	SOMAN	SOMAN	SOMAN
	2 Wire Unbundled ADSL Loop including manual service inquiry & facility reservation - Zone 3	I	3	UAL	UAL2X	20.62	44.69	31.55	0.00	0.00						
	Order Coordination for Specified Conversion Time (per LSR)			UAL	OCOSL		57.79									
	2 Wire Unbundled ADSL Loop without manual service inquiry & facility reservaton - Zone 1	I	1	UAL	UAL2W	11.23	44.69	31.55	0.00	0.00						
	2 Wire Unbundled ADSL Loop without manual service inquiry & facility reservaton - Zone 2	I	2	UAL	UAL2W	12.97	44.69	31.55	0.00	0.00						
	2 Wire Unbundled ADSL Loop without manual service inquiry & facility reservaton - Zone 3	I	3	UAL	UAL2W	20.62	44.69	31.55	0.00	0.00						
	Order Coordination for Specified Conversion Time (per LSR)			UAL	OCOSL		57.79									
	CLEC to CLEC Conversion Charge without outside dispatch	I		UAL	UREWO		44.69	29.29								
2-WIRE HIGH BIT RATE DIGITAL SUBSCRIBER LINE (HDSL) COMPATIBLE LOOP																
	2 Wire Unbundled HDSL Loop including manual service inquiry & facility reservation - Zone 1	I	1	UHL	UHL2X	7.88	44.69	31.55	0.00	0.00						
	2 Wire Unbundled HDSL Loop including manual service inquiry & facility reservation - Zone 2	I	2	UHL	UHL2X	9.09	44.69	31.55	0.00	0.00						
	2 Wire Unbundled HDSL Loop including manual service inquiry & facility reservation - Zone 3	I	3	UHL	UHL2X	14.48	44.69	31.55	0.00	0.00						
	Order Coordination for Specified Conversion Time (per LSR)			UHL	OCOSL		57.79									
	2 Wire Unbundled HDSL Loop without manual service inquiry and facility reservation - Zone 1	I	1	UHL	UHL2W	7.88	44.69	31.55	0.00	0.00						
	2 Wire Unbundled HDSL Loop without manual service inquiry and facility reservation - Zone 2	I	2	UHL	UHL2W	9.09	44.69	31.55	0.00	0.00						
	2 Wire Unbundled HDSL Loop without manual service inquiry and facility reservation - Zone 3	I	3	UHL	UHL2W	14.48	44.69	31.55	0.00	0.00						
	Order Coordination for Specified Conversion Time (per LSR)			UHL	OCOSL		57.79									
	CLEC to CLEC Conversion Charge without outside dispatch	I		UHL	UREWO		44.69	31.55								
4-WIRE HIGH BIT RATE DIGITAL SUBSCRIBER LINE (HDSL) COMPATIBLE LOOP																
	4 Wire Unbundled HDSL Loop including manual service inquiry and facility reservation - Zone 1	I	1	UHL	UHL4X	10.39	44.69	31.55	0.00	0.00						
	4-Wire Unbundled HDSL Loop including manual service inquiry and facility reservation - Zone 2	I	2	UHL	UHL4X	12.00	44.69	31.55	0.00	0.00						
	4-Wire Unbundled HDSL Loop including manual service inquiry and facility reservation - Zone 3	I	3	UHL	UHL4X	19.07	44.69	31.55	0.00	0.00						
	Order Coordination for Specified Conversion Time (per LSR)			UHL	OCOSL		57.79									
	4-Wire Unbundled HDSL Loop without manual service inquiry and facility reservation - Zone 1	I	1	UHL	UHL4W	10.39	44.69	31.55	0.00	0.00						
	4-Wire Unbundled HDSL Loop without manual service inquiry and facility reservation - Zone 2	I	2	UHL	UHL4W	12.00	44.69	31.55	0.00	0.00						
	4-Wire Unbundled HDSL Loop without manual service inquiry and facility reservation - Zone 3	I	3	UHL	UHL4W	19.07	44.69	31.55	0.00	0.00						
	Order Coordination for Specified Conversion Time (per LSR)			UHL	OCOSL		57.79									
	CLEC to CLEC Conversion Charge without outside dispatch	I		UHL	UREWO		44.69	31.55								
4-WIRE DS1 DIGITAL LOOP																
	4-Wire DS1 Digital Loop - Zone 1		1	USL	USLXX	41.02	211.93	72.49	38.24	7.20						
	4-Wire DS1 Digital Loop - Zone 2		2	USL	USLXX	46.41	211.93	72.49	38.24	7.20						
	4-Wire DS1 Digital Loop - Zone 3		3	USL	USLXX	62.03	211.93	72.49	38.24	7.20						
	Order Coordination for Specified Conversion Time (per LSR)			USL	OCOSL		57.79									
	CLEC to CLEC Conversion Charge without outside dispatch			USL	UREWO		100.91	42.97								
4-WIRE 19.2, 56 OR 64 KBPS DIGITAL GRADE LOOP																
	4 Wire Unbundled Digital 19.2 Kbps		1	UDL	UDL19	21.86	196.66	37.00	18.82	7.20						
	4 Wire Unbundled Digital 19.2 Kbps		2	UDL	UDL19	28.36	196.66	37.00	18.82	7.20						
	4 Wire Unbundled Digital 19.2 Kbps		3	UDL	UDL19	38.22	196.66	37.00	18.82	7.20						
	4 Wire Unbundled Digital Loop 56 Kbps - Zone 1		1	UDL	UDL56	21.86	196.66	37.00	18.82	7.20						
	4 Wire Unbundled Digital Loop 56 Kbps - Zone 2		2	UDL	UDL56	28.36	196.66	37.00	18.82	7.20						
	4 Wire Unbundled Digital Loop 56 Kbps - Zone 3		3	UDL	UDL56	38.22	196.66	37.00	18.82	7.20						
	Order Coordination for Specified Conversion Time (per LSR)			UDL	OCOSL		57.79									
	4 Wire Unbundled Digital Loop 64 Kbps - Zone 1		1	UDL	UDL64	21.86	196.66	37.00	18.82	7.20						
	4 Wire Unbundled Digital Loop 64 Kbps - Zone 2		2	UDL	UDL64	28.36	196.66	37.00	18.82	7.20						
	4 Wire Unbundled Digital Loop 64 Kbps - Zone 3		3	UDL	UDL64	38.22	196.66	37.00	18.82	7.20						
	Order Coordination for Specified Conversion Time (per LSR)			UDL	OCOSL		57.79									
	CLEC to CLEC Conversion Charge without outside dispatc h			UDL	UREWO		101.95	49.66								
2-WIRE Unbundled COPPER LOOP																

UNBUNDLED NETWORK ELEMENTS - Georgia

Attachment: 2 Ex. A

CATEGORY	RATE ELEMENTS	Interim	Zone	BCS	USOC	RATES ($)					Svc Order Submitted Elec per LSR	Svc Order Submitted Manually per LSR	Incremental Charge - Manual Svc Order vs. Electronic-1st	Incremental Charge - Manual Svc Order vs. Electronic-Add'l	Incremental Charge - Manual Svc Order vs. Electronic-Disc 1st	Incremental Charge - Manual Svc Order vs. Electronic-Disc Add'l
						Rec	Nonrecurring		Nonrecurring Disconnect		OSS Rates ($)					
							First	Add'l	First	Add'l	SOMEC	SOMAN	SOMAN	SOMAN	SOMAN	SOMAN
	2-Wire Unbundled Copper Loop-Designed including manual service inquiry & facility reservation - Zone 1	I	1	UCL	UCLPB	12.02	44.69	31.55	0.00	0.00						
	2-Wire Unbundled Copper Loop-Designed including manual service inquiry & facility reservation - Zone 2	I	2	UCL	UCLPB	13.88	44.69	31.55	0.00	0.00						
	2 Wire Unbundled Copper Loop-Designed including manual service inquiry & facility reservation - Zone 3	I	3	UCL	UCLPB	22.07	44.69	31.55	0.00	0.00						
	Order Coordination for Unbundled Copper Loops (per loop)			UCL	UCLMC		18.92	18.92								
	2-Wire Unbundled Copper Loop-Designed without manual service inquiry and facility reservation - Zone 1	I	1	UCL	UCLPW	12.02	44.69	31.55	0.00	0.00						
	2-Wire Unbundled Copper Loop-Designed without manual service inquiry and facility reservation - Zone 2	I	2	UCL	UCLPW	13.88	44.69	31.55	0.00	0.00						
	2-Wire Unbundled Copper Loop-Designed without manual service inquiry and facility reservation - Zone 3	I	3	UCL	UCLPW	22.07	44.69	31.55	0.00	0.00						
	Order Coordination for Unbundled Copper Loops (per loop)			UCL	UCLMC		18.92	18.92								
	Order Coordination for Unbundled Copper Loops (per loop)			UCL	UCLMC		18.92	18.92								
	CLEC to CLEC Conversion Charge without outside dispatch (UCL-Des)	I		UCL	UREWO		44.69	31.55								
4-WIRE COPPER LOOP																
	4-Wire Copper Loop-Designed including manual service inquiry and facility reservation - Zone 1	I	1	UCL	UCL4S	16.65	44.69	31.55	0.00	0.00						
	4-Wire Copper Loop-Designed including manual service inquiry and facility reservation - Zone 2	I	2	UCL	UCL4S	19.22	44.69	31.55	0.00	0.00						
	4-Wire Copper Loop-Designed including manual service inquiry and facility reservation - Zone 3	I	3	UCL	UCL4S	30.55	44.69	31.55	0.00	0.00						
	Order Coordination for Unbundled Copper Loops (per loop)			UCL	UCLMC		18.92	18.92								
	4-Wire Copper Loop-Designed without manual service inquiry and facility reservation - Zone 1	I	1	UCL	UCL4W	16.65	44.69	31.55	0.00	0.00						
	4-Wire Copper Loop-Designed without manual service inquiry and facility reservation - Zone 2	I	2	UCL	UCL4W	19.22	44.69	31.55	0.00	0.00						
	4-Wire Copper Loop-Designed without manual service inquiry and facility reservation - Zone 3	I	3	UCL	UCL4W	30.55	44.69	31.55	0.00	0.00						
	Order Coordination for Unbundled Copper Loops (per loop)			UCL	UCLMC		18.92	18.92								
	CLEC to CLEC conversion Charge without outside dispatch	I		UCL	UREWO		44.69	31.55								
LOOP MODIFICATION																
	Unbundled Loop Modification, Removal of Load Coils - 2 Wire pair less than or equal to 18k ft, per Unbundled Loop	I		UAL, UHL, UCL, UEQ, ULS, UEA, UEANL, UEPSR, UEPSB	ULM2L		0.00	0.00								
	Unbundled Loop Modification Removal of Load Coils - 4 Wire less than or equal to 18K ft, per Unbundled Loop	I		UHL, UCL, UEA	ULM4L		0.00	0.00								
	Unbundled Loop Modification Removal of Bridged Tap Removal, per Unbundled Loop			UAL, UHL, UCL, UEQ, ULS, UEA, UEANL, UEPSR, UEPSB	ULMBT		17.91									
SUB-LOOPS																
Sub-Loop Distribution																
	Sub-Loop - Per Cross Box Location - CLEC Feeder Facility Set-Up			UEANL	USBSA		255.76									
	Sub-Loop - Per Cross Box Location - Per 25 Pair Panel Set-Up			UEANL	USBSB		7.29									
	Sub-Loop - Per Building Equipment Room - CLEC Feeder Facility Set-Up			UEANL	USBSC		175.09									
	Sub-Loop - Per Building Equipment Room - Per 25 Pair Panel Set-Up			UEANL	USBSD		51.61									
	Unbundled Sub-Loops, Riser Cable, 2-Wire per Loop, Working and Spare Loop Activation			UEANL	USBRC	3.61	28.46	3.85	2.20	0.01						
	Unbundled Sub-Loops, Riser Cable, 4-Wire per Loop, Working and Spare Loop Activation			UEANL	USBRD	7.67	31.07	4.79	2.27	0.01						
	Sub-Loop Distribution Per 2-Wire Analog Voice Grade Loop - Zone 1		1	UEANL	USBN2	6.52	28.46	3.85	2.20	0.01						
	Sub-Loop Distribution Per 2-Wire Analog Voice Grade Loop - Zone 2		2	UEANL	USBN2	10.18	28.46	3.85	2.20	0.01						
	Sub-Loop Distribution Per 2-Wire Analog Voice Grade Loop - Zone 3		3	UEANL	USBN2	19.51	28.46	3.85	2.20	0.01						

CATEGORY	RATE ELEMENTS	Interim	Zone	BCS	USOC	RATES ($)					Svc Order Submitted Elec per LSR	Svc Order Submitted Manually per LSR	Incremental Charge - Manual Svc Order vs. Electronic-1st	Incremental Charge - Manual Svc Order vs. Electronic-Add'l	Incremental Charge - Manual Svc Order vs. Electronic-Disc 1st	Incremental Charge - Manual Svc Order vs. Electronic-Disc Add'l
						Rec	Nonrecurring		Nonrecurring Disconnect		OSS Rates ($)					
							First	Add'l	First	Add'l	SOMEC	SOMAN	SOMAN	SOMAN	SOMAN	SOMAN
	Sub-Loop Distribution Per 4-Wire Analog Voice Grade Loop - Zone 1		1	UEANL	USBN4	5.93	31.07	4.79	2.27	0.01						
	Sub-Loop Distribution Per 4-Wire Analog Voice Grade Loop - Zone 2		2	UEANL	USBN4	9.71	31.07	4.79	2.27	0.01						
	Sub-Loop Distribution Per 4-Wire Analog Voice Grade Loop - Zone 3		3	UEANL	USBN4	18.85	31.07	4.79	2.27	0.01						
	Order Coordination for Unbundled Sub-Loops, per sub-loop pair			UEANL	USBMC		18.92	18.92								
	Sub-Loop 2-Wire Intrabuilding Network Cable (INC)			UEANL	USBR2	3.61	28.46	3.85	2.20	0.01						
	Order Coordination for Unbundled Sub-Loops, per sub-loop pair			UEANL	USBMC		18.92	18.92								
	Sub-Loop 4-Wire Intrabuilding Network Cable (INC)	I		UEANL	USBR4	7.67	31.07	4.79	2.27	0.01						
	Order Coordination for Unbundled Sub-Loops, per sub-loop pair			UEANL	USBMC		18.92	18.92								
	Loop Testing - Basic 1st Half Hour			UEANL	URET1		25.12	25.12								
	Loop Testing - Basic Additional Half Hour			UEANL	URETA		13.62	13.62								
	2 Wire Copper Unbundled Sub-Loop Distribution - Zone 1	I	1	UEF	UCS2X	5.94	28.46	3.85	2.20	0.01						
	2 Wire Copper Unbundled Sub-Loop Distribution - Zone 2	I	2	UEF	UCS2X	7.51	28.46	3.85	2.20	0.01						
	2 Wire Copper Unbundled Sub-Loop Distribution - Zone 3	I	3	UEF	UCS2X	9.22	28.46	3.85	2.20	0.01						
	Order Coordination for Unbundled Sub-Loops, per sub-loop pair			UEF	USBMC		18.92	18.92								
	4 Wire Copper Unbundled Sub-Loop Distribution - Zone 1	I	1	UEF	UCS4X	6.37	31.07	4.79	2.27	0.01						
	4 Wire Copper Unbundled Sub-Loop Distribution - Zone 2	I	2	UEF	UCS4X	6.32	31.07	4.79	2.27	0.01						
	4 Wire Copper Unbundled Sub-Loop Distribution - Zone 3	I	3	UEF	UCS4X	9.10	31.07	4.79	2.27	0.01						
	Order Coordination for Unbundled Sub-Loops, per sub-loop pair			UEF	USBMC		18.92	18.92								
	Loop Testing - Basic 1st Half Hour			UEF	URET1		25.12	25.12								
	Loop Testing - Basic Additional Half Hour			UEF	URETA		13.62	13.62								
	Unbundled Network Terminating Wire (UNTW)															
	Unbundled Network Terminating Wire (UNTW) per Pair			UENTW	UENPP	0.533	25.12	12.28								
	Network Interface Device (NID)															
	Network Interface Device (NID) - 1-2 lines	I		UENTW	UND12		32.86	20.69								
	Network Interface Device (NID) - 1-6 lines	I		UENTW	UND16		56.03	43.86								
	Network Interface Device Cross Connect - 2 W	I		UENTW	UNDC2		2.45	2.45								
	Network Interface Device Cross Connect - 4W			UENTW	UNDC4		2.45	2.45								
UNE OTHER, PROVISIONING ONLY - NO RATE																
	NID - Dispatch and Service Order for NID installation			UENTW	UNDBX	0.00	0.00									
	UNTW Circuit Id Establishment, Provisioning Only - No Rate			UENTW	UENCE	0.00	0.00									
	Unbundled Contract Name, Provisioning Only - No Rate			UEANL,UEF,UEQ,UENTW	UNECN	0.00	0.00									
UNE OTHER, PROVISIONING ONLY - NO RATE																
	Unbundled Contact Name, Provisioning Only - no rate			UAL,UCL,UDC,UDL,UDN,UEA,UHL,USL	UNECN	0.00	0.00									
	Unbundled Sub-Loop Feeder-2 Wire Cross Box Jumper - no rate			UEA,UDN,UCL,UDC	USBFQ	0.00	0.00									
	Unbundled Sub-Loop Feeder-4 Wire Cross Box Jumper - no rate			UEA,USL,UCL,UDL	USBFR	0.00	0.00									
	Unbundled DS1 Loop - Superframe Format Option - no rate			USL	CCOSF	0.00	0.00									
	Unbundled DS1 Loop - Expanded Superframe Format option - no rate			USL	CCOEF	0.00	0.00									
HIGH CAPACITY UNBUNDLED LOCAL LOOP																
	High Capacity Unbundled Local Loop - DS3 - Per Mile per month			UE3	1L5ND	10.97										
	High Capacity Unbundled Local Loop - DS3 - Facility Termination per month			UE3	UE3PX	253.38	2,016.2145	151.685	129.8465	87.262						
	High Capacity Unbundled Local Loop - STS-1 - Per Mile per month			UDLSX	1L5ND	10.97										
	High Capacity Unbundled Local Loop - STS-1 - Facility Termination per month			UDLSX	UDLS1	305.42	2,016.2145	151.685	129.8465	87.262						
LOOP MAKE-UP																
	Loop Makeup - Preordering Without Reservation, per working or spare facility queried (Manual).			UMK	UMKLW		15.19	15.19								

CATEGORY		RATE ELEMENTS	Interim	Zone	BCS	USOC	RATES ($)					Svc Order Submitted Elec per LSR	Svc Order Submitted Manually per LSR	Incremental Charge - Manual Svc Order vs. Electronic-1st	Incremental Charge - Manual Svc Order vs. Electronic-Add'l	Incremental Charge - Manual Svc Order vs. Electronic-Disc 1st	Incremental Charge - Manual Svc Order vs. Electronic-Disc Add'l
							Rec	Nonrecurring		Nonrecurring Disconnect		OSS Rates ($)					
								First	Add'l	First	Add'l	SOMEC	SOMAN	SOMAN	SOMAN	SOMAN	SOMAN
		Loop Makeup - Preordering With Reservation, per spare facility queried (Manual).			UMK	UMKLP		19.85	19.85								
		Loop Makeup--With or Without Reservation, per working or spare facility queried (Mechanized)			UMK	UMKMQ		0.82	0.82								
LINE SPLITTING																	
	LINE SPLITTING																
	END USER ORDERING-CENTRAL OFFICE BASED																
		Line Splitting - per line activation DLEC owned splitter			UEPSR UEPSB	UREOS	0.61										
		Line Splitting - per line activation BST owned - physical			UEPSR UEPSB	UREBP	0.6297	20.10	12.40	7.68	4.30						
		Line Splitting - per line activation BST owned - virtual			UEPSR UEPSB	UREBV	0.6288	20.10	12.40	7.68	4.30						
MAINTENANCE OF SERVICE																	
	NOTE: The Expedite charge will be maintained commensurate with BellSouth's FCC No.1 Tariff, Section 13.3.1 as applicable.																
		No Trouble Found - per 1/2 hour increments - Basic						80.00	55.00								
		No Trouble Found - per 1/2 hour increments - Overtime						90.00	65.00								
		No Trouble Found - per 1/2 hour increments - Premium						100.00	75.00								
UNBUNDLED DEDICATED TRANSPORT																	
	INTEROFFICE CHANNEL - DEDICATED TRANSPORT																
		Interoffice Channel - Dedicated Transport - 2-Wire Voice Grade - Per Mile per month			U1TVX	1L5XX	0.0057										
		Interoffice Channel - Dedicated Transport- 2- Wire Voice Grade - Facility Termination			U1TVX	U1TV2	12.87	48.46	19.48	16.58	5.00						
		Interoffice Channel - Dedicated Transpor t- 2-Wire Voice Grade Rev Bat. - Per Mile per month			U1TVX	1L5XX	0.0057										
		Interoffice Channel - Dedicated Transport- 2- Wire VG Rev Bat. - Facility Termination			U1TVX	U1TR2	12.87	48.46	19.48	16.58	5.00						
		Interoffice Channel - Dedicated Transport - 4-Wire Voice Grade - Per Mile per month			U1TVX	1L5XX	0.0057										
		Interoffice Channel - Dedicated Transport - 4- Wire Voice Grade - Facility Termination			U1TVX	U1TV4	10.78	48.46	19.48	16.58	5.00						
		Interoffice Channel - Dedicated Transport - 56 kbps - per mile per month			U1TDX	1L5XX	0.0057										
		Interoffice Channel - Dedicated Transport - 56 kbps - Facility Termination			U1TDX	U1TD5	7.83	48.46	19.48	16.58	5.00						
		Interoffice Channel - Dedicated Transport - 64 kbps - per mile per month			U1TDX	1L5XX	0.0057										
		Interoffice Channel - Dedicated Transport - 64 kbps - Facility Termination			U1TDX	U1TD6	7.83	48.46	19.48	16.58	5.00						
		Interoffice Channel - Dedicated Channel - DS1 - Per Mile per month			U1TD1	1L5XX	0.1154										
		Interoffice Channel - Dedicated Tranport - DS1 - Facility Termination			U1TD1	U1TF1	34.19	111.03	80.28	31.36	21.73						
		Interoffice Channel - Dedicated Transport - DS3 - Per Mile per month			U1TD3	1L5XX	2.53										
		Interoffice Channel - Dedicated Transport - DS3 - Facility Termination per month			U1TD3	U1TF3	342.02	320.47	86.32	66.77	52.81						
		Interoffice Channel - Dedicated Transport - STS-1 - Per Mile per month			U1TS1	1L5XX	2.53										
		Interoffice Channel - Dedicated Transport - STS-1 - Facility Termination			U1TS1	U1TFS	358.67	320.47	86.32	66.77	52.81						
DARK FIBER																	
		Dark Fiber, Four Fiber Strands, Per Route Mile or Fraction Thereof per month - Local Channel			UDF, UDFCX	1L5DC	46.84										
		Dark Fiber, Four Fiber Strands, Per Route Mile or Fraction Thereof per month - Interoffice Channel			UDF, UDFCX	1L5DF	23.29										
		NRC Dark Fiber - Interoffice Channel			UDF, UDFCX	UDF14		1,776.53	89.75	73.64	18.70						
		Dark Fiber, Four Fiber Strands, Per Route Mile or Fraction Thereof per month - Local Loop			UDF, UDFCX	1L5DL	46.84										
8XX ACCESS TEN DIGIT SCREENING																	
		8XX Access Ten Digit Screening, Per Call					0.0008543										
		8XX Access Ten Digit Screening, w/8FL No. Delivery					0.0008543										
		8XX Access Ten Digit Screening, w/POTS No. Delivery					0.0008543										
LINE INFORMATION DATA BASE ACCESS (LIDB)																	
		LIDB Common Transport Per Query					0.0000682										
		LIDB Validation Per Query					0.0266962										

UNBUNDLED NETWORK ELEMENTS - Georgia

Attachment: 2 Ex. A

CATEGORY	RATE ELEMENTS	Interim	Zone	BCS	USOC	RATES ($)					Svc Order Submitted Elec per LSR	Svc Order Submitted Manually per LSR	Incremental Charge - Manual Svc Order vs. Electronic-1st	Incremental Charge - Manual Svc Order vs. Electronic-Add'l	Incremental Charge - Manual Svc Order vs. Electronic-Disc 1st	Incremental Charge - Manual Svc Order vs. Electronic-Disc Add'l
						Rec	Nonrecurring		Nonrecurring Disconnect		OSS Rates ($)					
							First	Add'l	First	Add'l	SOMEC	SOMAN	SOMAN	SOMAN	SOMAN	SOMAN
	LIDB Originating Point Code Establishment or Change			OQU	NRBPX		33.24	33.24	39.35	39.35						
CALLING NAME (CNAM) SERVICE																
	CNAM for DB Owners, Per Query					0.0009924										
	CNAM for Non DB Owners, Per Query					0.0009924										
LNP Query Service																
	LNP Charge Per query					0.00082										
	LNP Service Establishment Manual						12.49		11.09							
	LNP Service Provisioning with Point Code Establishment						574.87	293.68	251.47	184.91						
SELECTIVE ROUTING																
	Selective Routing Per Unique Line Class Code Per Request Per Switch						102.19	61.15	12.68	6.34						
VIRTUAL COLLOCATION																
	Virtual Collocation-2 Wire Cross Connects (Loop) for Line Splitting			UEPSR UEPSB	VE1LS	0.0188	0.00	0.00	0.00	0.00						
PHYSICAL COLLOCATION																
	Physical Collocation-2 Wire Cross Connects (Loop) for Line Splitting			UEPSR UEPSB	PE1LS	0.0197	0.00	0.00								
AIN SELECTIVE CARRIER ROUTING																
	Regional Service Establishment						101,311.67	101,311.67	7,833.25	7,833.25						
	End Office Establishment						158.92	158.92	1.64	1.64						
	Line/Port NRC, per end user						2.06	2.06								
	Query NRC, per query					0.0020368										
AIN - BELLSOUTH AIN SMS ACCESS SERVICE																
	AIN SMS Access Service - Service Establishment, Per State, Initial Setup			A1N	CAMSE		41.41	41.41	41.63	41.63						
	AIN SMS Access Service - Port Connection - Dial/Shared Access			A1N	CAMDP		8.15	8.15	9.16	9.16						
	AIN SMS Access Service - Port Connection - ISDN Access			A1N	CAM1P		8.15	8.15	9.16	9.16						
	AIN SMS Access Service - User Identification Codes - Per User ID Code			A1N	CAMAU		35.29	35.29	26.50	26.50						
	AIN SMS Access Service - Security Card, Per User ID Code, Initial or Replacement			A1N	CAMRC		40.24	40.24	11.72	11.72						
	AIN SMS Access Service - Storage, Per Unit (100 Kilobytes)					0.0038										
	AIN SMS Access Service - Session, Per Minute					1.81										
	AIN SMS Access Service - Company Performed Session, Per Minute					0.8323										
SIGNALING (CCS7)																
	CCS7 Signaling Usage, Per TCAP Message					0.0000527										
	CCS7 Signaling Usage, Per ISUP Message (same as E.3.3)					0.0000132										
911 PBX LOCATE																
911 PBX LOCATE DATABASE CAPABILITY																
	Service Establishment per CLEC per End User Account			9PBDC	9PBEU		1,825.00									
	Changes to TN Range or Customer Profile			9PBDC	9PBTN		182.67									
	Per Telephone Number (Monthly)			9PBDC	9PBMM	0.07										
	Change Company (Service Provider) ID			9PBDC	9PBPC		536.23									
	PBX Locate Service Support per CLEC (Monthlt)			9PBDC	9PBMR	176.96										
	Service Order Charge			9PBDC	9PBSC		11.73									
911 PBX LOCATE TRANSPORT COMPONENT																
See Att 3																
ENHANCED EXTENDED LINK (EELs)																
NOTE: The monthly recurring and non-recurring charges below will apply and the Switch-As-Is Charge will not apply for UNE combinations provisioned as ' Ordinarily Combined' Network Elements.																
NOTE: The monthly recurring and the Switch-As-Is Charge and not the non-recurring charges below will apply for UNE combinations provisioned as ' Currently Combined' Network Elements.																
2-WIRE VOICE GRADE LOOP FOR USE IN A COMBINATION																
	2-Wire VG Loop (SL2) in Combination - Zone 1		1	UNCVX	UEAL2	11.57	195.94	36.38	18.42	6.86						
	2-Wire VG Loop (SL2) in Combination - Zone 2		2	UNCVX	UEAL2	16.95	195.94	36.38	18.42	6.86						
	2-Wire VG Loop (SL2) in Combination - Zone 3		3	UNCVX	UEAL2	33.08	195.94	36.38	18.42	6.86						
	Voice Grade COCI - Per Month			UNCVX	1D1VG	0.4689	27.33	2.90	16.86	1.04						
4-WIRE VOICE GRADE LOOP FOR USE IN A COMBINATION																
	4-Wire Analog Voice Grade Loop in Combination - Zone 1		1	UNCVX	UEAL4	17.80	195.94	36.38	18.42	6.86						
	4-Wire Analog Voice Grade Loop in Combination - Zone 2		2	UNCVX	UEAL4	21.68	195.94	36.38	18.42	6.86						
	4-Wire Analog Voice Grade Loop in Combination - Zone 3		3	UNCVX	UEAL4	30.25	195.94	36.38	18.42	6.86						
	Voice Grade COCI in combination - per month			UNCVX	1D1VG	0.4689	27.33	2.90	16.86	1.04						
4-WIRE 56 KBPS DIGITAL LOOP FOR USE IN A COMBINATION																
	4-Wire 56Kbps Digital Grade Loop in Combination - Zone 1		1	UNCDX	UDL56	21.86	195.94	36.38	18.42	6.86						

CATEGORY	RATE ELEMENTS	Interim	Zone	BCS	USOC	RATES ($)					Svc Order Submitted Elec per LSR	Svc Order Submitted Manually per LSR	Incremental Charge - Manual Svc Order vs. Electronic-1st	Incremental Charge - Manual Svc Order vs. Electronic-Add'l	Incremental Charge - Manual Svc Order vs. Electronic-Disc 1st	Incremental Charge - Manual Svc Order vs. Electronic-Disc Add'l
						Rec	Nonrecurring		Nonrecurring Disconnect		OSS Rates ($)					
							First	Add'l	First	Add'l	SOMEC	SOMAN	SOMAN	SOMAN	SOMAN	SOMAN
	4-Wire 56Kbps Digital Grade Loop in Combination - Zone 2		2	UNCDX	UDL56	28.36	195.94	36.38	18.42	6.86						
	4-Wire 56Kbps Digital Grade Loop in Combination - Zone 3		3	UNCDX	UDL56	38.22	195.94	36.38	18.42	6.86						
	OCU-DP COCI (data) per month (2.4-64kbs)			UNCDX	1D1DD	0.9963	27.33	2.90	16.86	1.04						
	4-WIRE 64 KBPS DIGITAL LOOP FOR USE IN A COMBINATI\ON															
	4-Wire 64Kbps Digital Grade Loop in Combination - Zone 1		1	UNCDX	UDL64	21.86	195.94	36.38	18.42	6.86						
	4-Wire 64Kbps Digital Grade Loop in Combination - Zone 2		2	UNCDX	UDL64	28.36	195.94	36.38	18.42	6.86						
	4-Wire 64Kbps Digital Grade Loop in Combination - Zone 3		3	UNCDX	UDL64	38.22	195.94	36.38	18.42	6.86						
	OCU-DP COCI (data) - in combination - per month (2.4-64kbs)			UNCDX	1D1DD	0.9963	27.33	2.90	16.86	1.04						
	2-WIRE ISDN LOOP FOR USE IN COMBINATION															
	2-Wire ISDN Loop in Combination - Zone 1		1	UNCNX	U1L2X	19.82	195.94	36.38	18.42	6.86						
	2-Wire ISDN Loop in Combination - Zone 2		2	UNCNX	U1L2X	26.26	195.94	36.38	18.42	6.86						
	2-Wire ISDN Loop in Combination - Zone 3		3	UNCNX	U1L2X	42.17	195.94	36.38	18.42	6.86						
	2-wire ISDN COCI (BRITE) - in combination - per month			UNCNX	UC1CA	1.66	27.33	2.90	16.86	1.04						
	4-WIRE DS1 DIGITAL LOOP FOR USE IN A COMBINATION															
	4-Wire DS1 Digital Loop in Combination - Zone 1		1	UNC1X	USLXX	41.02	209.45	70.44	37.91	6.86						
	4-Wire DS1 Digital Loop in Combination - Zone 2		2	UNC1X	USLXX	46.41	209.45	70.44	37.91	6.86						
	4-Wire DS1 Digital Loop in Combination - Zone 3		3	UNC1X	USLXX	62.03	209.45	70.44	37.91	6.86						
	DS1 COCI in combination per month			UNC1X	UC1D1	7.35	27.33	2.90	16.86	1.04						
	2 WIRE VOICE GRADE INTEROFFICE TRANSPORT FOR USE IN A COMBINATION															
	Interoffice Transport - 2-wire VG - Dedicated- Per Mile Per Month			UNCVX	1L5XX	0.0057										
	Interoffice Transport - 2-wire VG - Dedicated - Facility Termination per month			UNCVX	U1TV2	12.87	66.53	33.61	43.42	27.60						
	4 WIRE VOICE GRADE INTEROFFICE TRANSPORT FOR USE IN A COMBINATION															
	Interoffice Transport - 4-wire VG - Dedicated - Per Mile Per Month			UNCVX	1L5XX	0.0057										
	Interoffice Transport - 4-wire VG - Dedicated - Facility Termination per month			UNCVX	U1TV4	10.78	66.53	33.61	43.42	27.60						
	DS1 INTEROFFICE TRANSPORT FOR COMBINATION															
	Interoffice Transport - Dedicated - DS1 combination - Per Mile per month			UNC1X	1L5XX	0.1154										
	Interoffice Transport - Dedicated - DS1 combination - Facility Termination per month			UNC1X	U1TF1	34.19	87.76	45.73	43.80	27.97						
	DS3 INTEROFFICE TRANSPORT FOR USE IN A COMBINATION															
	Interoffice Transport - Dedicated - DS3 combination - Per Mile Per Month			UNC3X	1L5XX	2.53										
	Interoffice Transport - Dedicated - DS3 - Facility Termination per month			UNC3X	U1TF3	342.02	325.91	77.07	49.56	32.88						
	STS-1 INTEROFFICE TRANSPORT FOR USE IN COMBINATION															
	Interoffice Transport - Dedicated - STS-1 combination - Per Mile Per Month			UNCSX	1L5XX	2.53										
	Interoffice Transport - Dedicated - STS-1 combination - Facility Termination per month			UNCSX	U1TFS	358.67	325.91	77.07	49.56	32.88						
	4-WIRE 56 KBPS DIGITAL LOOP WITH 56 KBPS INTEROFFICE TRANSPORT															
	4-wire 56 kbps Local Loop in combination - Zone 1		1	UNCDX	UDL56	21.86	195.94	36.38	18.42	6.86						
	4-wire 56 kbps Local Loop in combination - Zone 2		2	UNCDX	UDL56	28.36	195.94	36.38	18.42	6.86						
	4-wire 56 kbps Local Loop in combination - Zone 3		3	UNCDX	UDL56	38.22	195.94	36.38	18.42	6.86						
	Interoffice Transport - Dedicated - 4-wire 56 kbps combination - Per Mile per month			UNCDX	1L5XX	0.0057										
	Interoffice Transport - Dedicated - 4-wire 56 kbps combination - Facility Termination per month			UNCDX	U1TD5	7.83	66.53	33.61	43.42	27.60						
	4-WIRE 64 KBPS DIGITAL EXTENDED LOOP WITH 64 KBPS INTEROFFICE TRANSPORT															
	4-wire 64 kbps Lcoal Loop in Combination - Zone 1		1	UNCDX	UDL64	21.86	195.94	36.38	18.42	6.86						
	4-wire 64 kbps Lcoal Loop in Combination - Zone 2		2	UNCDX	UDL64	28.36	195.94	36.38	18.42	6.86						
	4-wire 64 kbps Lcoal Loop in Combination - Zone 3		3	UNCDX	UDL64	38.22	195.94	36.38	18.42	6.86						
	Interoffice Transport - Dedicated - 4-wire 64 kbps combination - Per Mile per month			UNCDX	1L5XX	0.0057										
	Interoffice Transport - Dedicated - 4-wire 64 kbps combination - Facility Termination per month			UNCDX	U1TD6	7.83	66.53	33.61	43.42	27.60						
	4-WIRE 56 KBPS DIGITAL EXTENDED LOOP WITH DS0 INTEROFFICE TRANSPORT															
	4-wire 56 kbps Local Loop in combination - Zone 1		1	UNCDX	UDL56	21.86	195.94	36.38	18.42	6.86						
	4-wire 56 kbps Local Loop in combination - Zone 2		2	UNCDX	UDL56	28.36	195.94	36.38	18.42	6.86						
	4-wire 56 kbps Local Loop in combination - Zone 3		3	UNCDX	UDL56	38.22	195.94	36.38	18.42	6.86						

UNBUNDLED NETWORK ELEMENTS - Georgia

Attachment: 2 Ex. A

CATEGORY	RATE ELEMENTS	Interim	Zone	BCS	USOC	RATES ($)					Svc Order Submitted Elec per LSR	Svc Order Submitted Manually per LSR	Incremental Charge - Manual Svc Order vs. Electronic-1st	Incremental Charge - Manual Svc Order vs. Electronic-Add'l	Incremental Charge - Manual Svc Order vs. Electronic-Disc 1st	Incremental Charge - Manual Svc Order vs. Electronic-Disc Add'l
						Rec	Nonrecurring		Nonrecurring Disconnect		OSS Rates ($)					
							First	Add'l	First	Add'l	SOMEC	SOMAN	SOMAN	SOMAN	SOMAN	SOMAN
	4-wiree 56 kbps Interoffice Transport - Dedicated - Per Mile per month			UNCDX	1L5XX	0.0057										
	4-wire 56 kbps Interoffice Transport - Dedicated - Facility Termination per month			UNCDX	U1TD5	7.83	66.53	33.61	43.42	27.60						
4-WIRE 64 KBPS DIGITAL EXTENDED LOOP WITH DS0 INTEROFFICE TRANSPORT																
	4-wire 64 kbps Local Loop in combination - Zone 1		1	UNCDX	UDL64	21.86	195.94	36.38	18.42	6.86						
	4-wire 64 kbps Local Loop in combination - Zone 2		2	UNCDX	UDL64	28.36	195.94	36.38	18.42	6.86						
	4-wire 64 kbps Local Loop in combination - Zone 3		3	UNCDX	UDL64	38.22	195.94	36.38	18.42	6.86						
	I4-wire 65 kbps Interoffice Transport - Dedicated - Per Mile per month			UNCDX	1L5XX	0.0057										
	4-wire 64 kbps Interoffice Transport - Dedicated - Facility Termination per month			UNCDX	U1TD6	7.83	66.53	33.61	43.42	27.60						
DS1 DIGITAL LOOP AND DS1 INTERFOFFICE TRANSPORT																
	4-Wire DS1 Digital Loop in Combination - Zone 1		1	UNC1X	USLXX	41.02	209.45	70.44	37.91	6.86						
	4-Wire DS1 Digital Loop in Combination - Zone 2		2	UNC1X	USLXX	46.41	209.45	70.44	37.91	6.86						
	4-Wire DS1 Digital Loop in Combination - Zone 3		3	UNC1X	USLXX	62.03	209.45	70.44	37.91	6.86						
	Interoffice Transport - Dedicated - DS1 combination - Per Mile per month			UNC1X	1L5XX	0.1154										
	Interoffice Transport - Dedicated - DS1 combination - Facility Termination per month			UNC1X	U1TF1	34.19	87.76	45.73	43.80	27.97						
DS3 DIGITAL LOOP WITH DEDICATED DS3 INTEROFFICE TRANSPORT																
	DS3 Local Loop in combination - per mile per month			UNC3X	1L5ND	12.6155										
	DS3 Local Loop in combination - Facility Termination per month			UNC3X	UE3PX	291.387	2,016.2145	151.685	129.8465	87.262						
	Interoffice Transport - Dedicated - DS3 - Per Mile per month			UNC3X	1L5XX	2.53										
	Interoffice Transport - Dedicated - DS3 combination - Facility Termination per month			UNC3X	U1TF3	342.02	325.91	77.07	49.56	32.88						
STS-1 DIGITAL LOOP WITH DEDICATED STS-1 INTEROFFICE TRANSPORT																
	STS-1 Local Lolp in combination - per mile per month			UNCSX	1L5ND	12.6155										
	STS-1 Local Loop in combination - Facility Termination per month			UNCSX	UDLS1	351.233	2,016.2145	151.685	129.8465	87.262						
	Interoffice Transport - Dedicated - STS-1 combination - per mile per month			UNCSX	1L5XX	2.53										
	Interoffice Transport - Dedicated - STS-1 combination - Facility Termination per month			UNCSX	U1TFS	358.67	325.91	77.07	49.56	32.88						
ADDITIONAL NETWORK ELEMENTS																
	When used as a part of a currently combined facility, the non-recurrng charges do not apply, but a Switch As Is charge does apply.															
	When used as ordinarily combined network elements in All States, the non-recurring charges apply and the Switch As Is Charge does not.															
	Commingling Authorization			UNCVX, UNCDX, UNC1X, UNC3X, UNCSX, U1TD1, U1TD3, U1TS1, UE3, UDLSX, U1TVX, U1TDX, U1TUB	CMGAU	0.00	0.00	0.00	0.00	0.00						
	Nonrecurring Currently Combined Network Elements "Switch As Is" Charge (One applies to each combination)															
	Nonrecurring Currently Combined Network Elements Switch -As-Is Charge			UNCVX, UNCDX, UNC1X, UNC3X, UNCSX	UNCCC		5.70	5.70	6.61	6.61						
	Optional Features & Functions:															
	Clear Channel Capability Extended Frame Option - per DS1	I		U1TD1, ULDD1,UNC1X	CCOEF		0.00	0.00	0.00	0.00						
	Clear Channel Capability Super FrameOption - per DS1	I		U1TD1, ULDD1,UNC1X	CCOSF		0.00	0.00	0.00	0.00						
	Clear Channel Capability (SF/ESF) Option - Subsequent Activity - per DS1	I		ULDD1, U1TD1, UNC1X, USL	NRCCC		184.62	23.78	2.03	0.79						
	C-bit Parity Option - Subsequent Activity - per DS3	i		U1TD3, ULDD3, UE3, UNC3X	NRCC3		218.74	7.66	0.7591	0.00						
MULTIPLEXERS																
	DS1 to DS0 Channel System per month			UNC1X	MQ1	69.75	86.10									
	OCU-DP COCI (data) - DS1 to DS0 Channel System - per month (2.4-64kbs) used for a Local Loop			UDL	1D1DD	0.9963	11.98	11.39	6.61	6.61						

UNBUNDLED NETWORK ELEMENTS - Georgia

Attachment: 2 Ex. A

CATEGORY	RATE ELEMENTS	Interim	Zone	BCS	USOC	RATES ($)					Svc Order Submitted Elec per LSR	Svc Order Submitted Manually per LSR	Incremental Charge - Manual Svc Order vs. Electronic-1st	Incremental Charge - Manual Svc Order vs. Electronic-Add'l	Incremental Charge - Manual Svc Order vs. Electronic-Disc 1st	Incremental Charge - Manual Svc Order vs. Electronic-Disc Add'l
						Rec	Nonrecurring		Nonrecurring Disconnect		OSS Rates ($)					
							First	Add'l	First	Add'l	SOMEC	SOMAN	SOMAN	SOMAN	SOMAN	SOMAN
	OCU-DP COCI (data) - DS1 to DS0 Channel System - per month (2.4-64kbs) used for connection to a channelized DS1 Local Channel in the same SWC as collocation			U1TUD	1D1DD	0.9963	11.98	11.39	6.61	6.61						
	2-wire ISDN COCI (BRITE) - DS1 to DS0 Channel Systsem - per month for a Local Loop			UDN	UC1CA	1.66	15.81	11.39	6.61	6.61						
	2-wire ISDN COCI (BRITE) - DS1 to DS0 Channel Systsem - per month used for connection to a channelized DS1 Local Channel in the same SWC as collocation			U1TUB	UC1CA	1.66	15.81	11.39	6.61	6.61						
	Voice Grade COCI - DS1 to DS0 Channel System - per month used for a Local Loop			UEA	1D1VG	0.4689	11.98	11.39	6.61	6.61						
	Voice Grade COCI - DS1 to DS0 Channel System - per month used for connection to a channelized DS1 Local Channel in the same SWC as collocation			U1TUC	1D1VG	0.4689	11.98	11.39	6.61	6.61						
	DS3 to DS1 Channel System per month			UNC3X	MQ3	121.90										
	STS-1 to DS1 Channel System per month			UNCSX	MQ3	121.90										
	DS1 COCI used with Loop per month			USL	UC1D1	7.35	15.81	11.39	6.61	6.61						
	DS1 COCI (used for connection to a channelized DS1 Local Channel in the same SWC as collocation) per month			U1TUA	UC1D1	7.35	15.81	11.39	6.61	6.61						
	DS1 COCI used with Interoffice Channel per month			U1TD1	UC1D1	7.35	15.81	11.39	6.61	6.61						
	DS3 Interface Unit (DS1 COCI) used with Local Channel per month			ULDD1	UC1D1	7.35	15.81	11.39	6.61	6.61						
UNBUNDLED LOCAL EXCHANGE SWITCHING(PORTS)																
	The Exchange Switching Port Rates Reflected Here Apply to Embedded Base Switching Ports as of March 10, 2005 and Consist of the TELRIC Cost Based Rates Plus $1.00 in Accordance with the TRRO.															
	Exchange Ports															
	NOTE: Although the Port Rate includes all available features in GA, KY, LA & TN, the desired features will need to be ordered using retail USOCs															
	2-WIRE VOICE GRADE LINE PORT RATES (RES)															
	Exchange Ports - 2-Wire Analog Line Port- Res.			UEPSR	UEPRL	2.09	2.42	2.31	1.37	1.28						
	Exchange Ports - 2-Wire Analog Line Port with Caller ID - Res.			UEPSR	UEPRC	2.09	2.42	2.31	1.37	1.28						
	Exchange Ports - 2-Wire Analog Line Port outgoing only - Res.			UEPSR	UEPRO	2.09	2.42	2.31	1.37	1.28						
	Exchange Ports - 2-Wire VG unbundled res, low usage line port with Caller ID (LUM)			UEPSR	UEPAP	2.09	2.42	2.31	1.37	1.28						
	Exchange Ports - 2-Wire Voice Georgia basic dialing port without Caller ID			UEPSR	UEPWC	2.09	2.42	2.31	1.37	1.28						
	2-Wire voice unbundled Georgia basic dialing port for use with Caller ID - res			UEPSR	UEPWQ	2.09	2.42	2.31	1.37	1.28						
	2-Wire voice unbundled Georgia basic dialing port - outgoing only			UEPSR	UEPWR	2.09	2.42	2.31	1.37	1.28						
	2-Wire voice unbundled Low Usage Line Port without Caller ID Capability			UEPSR	UEPRT	2.09	2.42	2.31	1.37	1.28						
	2-Wire Voice Grade Unbundled Port without Caller ID capability, Georgia			UEPSR	UEPRV	2.09	2.42	2.31	1.37	1.28						
	2-Wire Voice Grade Unbundled Port with Caller ID capability, Georgia			UEPSR	UEPRU	2.09	2.42	2.31	1.37	1.28						
	Subsequent Activity			UEPSR	USASC	0.00	0.00	0.00								
	FEATURES															
	All Available Vertical Features			UEPSR	UEPVF	0.775	0.00	0.00								
	2-WIRE VOICE GRADE LINE PORT RATES (BUS)															
	Exchange Ports - 2-Wire Analog Line Port without Caller ID - Bus			UEPSB	UEPBL	2.09	2.42	2.31	1.37	1.28						
	Exchange Ports - 2-Wire VG unbundled Line Port with unbundled port with Caller+E484 ID - Bus.			UEPSB	UEPBC	2.09	2.42	2.31	1.37	1.28						
	Exchange Ports - 2-Wire Voice Georgia Business Basic Dialing Port, with Caller ID capability			UEPSB	UEPWP	2.09	2.42	2.31	1.37	1.28						
	Exchange Ports - 2-Wire Analog Line Port outgoing only - Bus.			UEPSB	UEPBO	2.09	2.42	2.31	1.37	1.28						
	Exhange Ports - 2-Wire VG unbundled incoming only port with Caller ID - Bus			UEPSB	UEPB1	2.09	2.42	2.31	1.37	1.28						
	Exchange Ports - 2-Wire Voice Georgia Business Dialing Plan without Caller ID			UEPSB	UEPWD	2.09	2.42	2.31	1.37	1.28						
	2-Wire voice unbundled Incoming Only Port without Caller ID Capability			UEPSB	UEPBE	2.09	2.42	2.31	1.37	1.28						

CATEGORY	RATE ELEMENTS	Interim	Zone	BCS	USOC	RATES ($)					Svc Order Submitted Elec per LSR	Svc Order Submitted Manually per LSR	Incremental Charge - Manual Svc Order vs. Electronic-1st	Incremental Charge - Manual Svc Order vs. Electronic-Add'l	Incremental Charge - Manual Svc Order vs. Electronic-Disc 1st	Incremental Charge - Manual Svc Order vs. Electronic-Disc Add'l
						Rec	Nonrecurring		Nonrecurring Disconnect		OSS Rates ($)					
							First	Add'l	First	Add'l	SOMEC	SOMAN	SOMAN	SOMAN	SOMAN	SOMAN
	Subsequent Activity			UEPSB	USASC	0.00	0.00	0.00								
FEATURES																
	All Available Vertical Features			UEPSB	UEPVF	0.775	0.00	0.00								
EXCHANGE PORT RATES (DID & PBX)																
	2-Wire VG Unbundled 2-Way PBX Trunk - Res			UEPSE	UEPRD	2.09	28.88	13.63	11.48	0.83						
	2-Wire VG Line Side Unbundled 2-Way PBX Trunk - Bus			UEPSP	UEPPC	2.09	28.88	13.63	11.48	0.83						
	2-Wire VG Line Side Unbundled Outward PBX Trunk - Bus			UEPSP	UEPPO	2.09	28.88	13.63	11.48	0.83						
	2-Wire VG Line Side Unbundled Incoming PBX Trunk - Bus			UEPSP	UEPP1	2.09	28.88	13.63	11.48	0.83						
	2-Wire Analog Long Distance Terminal PBX Trunk - Bus			UEPSP	UEPLD	2.09	28.88	13.63	11.48	0.83						
	2-Wire Voice Unbundled PBX LD Terminal Ports			UEPSP	UEPLD	2.09	28.88	13.63	11.48	0.83						
	2-Wire Vice Unbundled 2-Way PBX Usage Port			UEPSP	UEPXA	2.09	28.88	13.63	11.48	0.83						
	2-Wire Voice Unbundled PBX Toll Terminal Hotel Ports			UEPSP	UEPXB	2.09	28.88	13.63	11.48	0.83						
	2-Wire Voice Unbundled PBX LD DDD Terminals Port			UEPSP	UEPXC	2.09	28.88	13.63	11.48	0.83						
	2-Wire Voice Unbundled PBX LD Terminal Switchboard Port			UEPSP	UEPXD	2.09	28.88	13.63	11.48	0.83						
	2-Wire Voice Unbundled PBX LD Terminal Switchboard IDD Capable Port			UEPSP	UEPXE	2.09	28.88	13.63	11.48	0.83						
	2-Wire Voice Unbundled 2-Way PBX Hotel/Hospital Economy Administrative Calling Port			UEPSP	UEPXL	2.09	28.88	13.63	11.48	0.83						
	2-Wire Voice Unbundled 2-Way PBX Hotel/Hospital Economy Room Calling Port			UEPSP	UEPXM	2.09	28.88	13.63	11.48	0.83						
	2-Wire Voice Unbundled 1-Way Outgoing PBX Hotel/Hospital Discount Room Calling Port			UEPSP	UEPXO	2.09	28.88	13.63	11.48	0.83						
	2-Wire Voice Unbundled 1-Way Outgoing PBX Measured Port			UEPSP	UEPXS	2.09	28.88	13.63	11.48	0.83						
	2-Wire voice unbundled Georgia basic dialing port - 1-Way Oudial Trunk			UEPSP	UEPWS	2.09	28.88	13.63	11.48	0.83						
	2-Wire voice unbundled Georgia basic dialing port - 2-Way Trunk			UEPSP	UEPWT	2.09	28.88	13.63	11.48	0.83						
	2-Wire voice unbundled Georgia basic dialing port - 2-way PBX Trunk			UEPSP	UEPPQ	2.09	28.88	13.63	11.48	0.83						
	Subsequent Activity			UEPSP	USASC	0.00	0.00	0.00								
FEATURES																
	All Available Vertical Features			UEPSP UEPSE	UEPVF	0.775	0.00	0.00								
NOTE: Transmission/usage charges associated with POTS circuit switched usage will also apply to circuit switched voice and/or circuit switched data transmission by B-Channels associated with 2-wire ISDN ports.																
NOTE: Access to B Channel or D Channel Packet capabilities will be available only through BFR/New Business Request Process. Rates for the packet capabilities will be determined via the Bona Fide Request/New Business Request Process.																
2-WIRE VOICE GRADE LINE PORT RATES (DID)																
	Exchange Ports - 2-Wire DID Port			UEPEX	UEPP2	6.50	122.26	18.65	54.82	3.45						
2-WIRE VOICE GRADE LINE PORT RATES (ISDN-BRI)																
	Exchange Ports - 2-Wire ISDN Port (See Notes below.)			UEPTX, UEPSX	U1PMA	7.09	76.39	51.50	45.67	10.36						
	All Features Offered			UEPTX, UEPSX	UEPVF	0.775	0.00	0.00								
	Exchange Ports - 2-Wire ISDN Port -- Channel Profiles			UEPTX, UEPSX	U1UMA	0.00	0.00	0.00								
NOTE: Transmission/usage charges associated with POTS circuit switched usage will also apply to circuit switched voice and/or circuit switched data transmission by B-Channels associated with 2-wire ISDN ports.																
NOTE: Access to B Channel or D Channel Packet capabilities will be available only through BFR/New Business Request Process. Rates for the packet capabilities will be determined via the Bona Fide Request/New Business Request Process.																
UNBUNDLED PORT with REMOTE CALL FORWARDING CAPABILITY																
UNBUNDLED REMOTE CALL FORWARDING SERVICE - RESIDENCE																
	Unbundled Remote Call Forwarding Service, Area Calling, Res			UEPVR	UERAC	2.09	2.42	2.31	1.37	1.28						
	Unbundled Remote Call Forwarding Service, Local Calling - Res			UEPVR	UERLC	2.09	2.42	2.31	1.37	1.28						
	Unbundled Remote Call Forwarding Service, InterLATA - Res			UEPVR	UERTE	2.09	2.42	2.31	1.37	1.28						
	Unbundled Remote Call Forwarding Service, IntraLATA - Res			UEPVR	UERTR	2.09	2.42	2.31	1.37	1.28						
Non-Recurring																
	Unbundled Remote Call Forwarding Service - Conversion - Switch-as-is			UEPVR	USAC2		2.01	0.31								
	Unbundled Remote Call Forwarding Service - Conversion with allowed change (PIC and LPIC)			UEPVR	USACC		2.01	0.31								
UNBUNDLED REMOTE CALL FORWARDING - Bus																
	Unbundled Remote Call Forwarding Service, Area Calling - Bus			UEPVB	UERAC	2.09	2.42	2.31	1.37	1.28						
	Unbundled Remote Call Forwarding Service, Local Calling - Bus			UEPVB	UERLC	2.09	2.42	2.31	1.37	1.28						
	Unbundled Remote Call Forwarding Service, InterLATA - Bus			UEPVB	UERTE	2.09	2.42	2.31	1.37	1.28						
	Unbundled Remote Call Forwarding Service, IntraLATA - Bus			UEPVB	UERTR	2.09	2.42	2.31	1.37	1.28						
	Unbundled Remote Call Forwarding Service Expanded and Exception Local Calling			UEPVB	UERVJ	2.09	2.42	2.31	1.37	1.28						
Non-Recurring																

UNBUNDLED NETWORK ELEMENTS - Georgia

Attachment: 2 Ex. A

CATEGORY	RATE ELEMENTS	Interim	Zone	BCS	USOC	RATES ($) Rec	Nonrecurring First	Nonrecurring Add'l	Nonrecurring Disconnect First	Nonrecurring Disconnect Add'l	Svc Order Submitted Elec per LSR	Svc Order Submitted Manually per LSR	Incremental Charge - Manual Svc Order vs. Electronic- 1st	Incremental Charge - Manual Svc Order vs. Electronic- Add'l	Incremental Charge - Manual Svc Order vs. Electronic- Disc 1st	Incremental Charge - Manual Svc Order vs. Electronic- Disc Add'l
											OSS Rates ($)					
											SOMEC	SOMAN	SOMAN	SOMAN	SOMAN	SOMAN
	Unbundled Remote Call Forwarding Service - Conversion - Switch-as-is			UEPVB	USAC2		2.01	0.31								
	Unbundled Remote Call Forwarding Service - Conversion with allowed change (PIC and LPIC)			UEPVB	USACC		2.01	0.31								
UNBUNDLED LOCAL SWITCHING, PORT USAGE																
End Office Switching (Port Usage)																
	End Office Switching Function, Per MOU					0.0006153										
	End Office Trunk Port - Shared, Per MOU					0.0001226										
Tandem Switching (Port Usage) (Local or Access Tandem)																
	Tandem Switching Function Per MOU					0.0000972										
	Tandem Trunk Port - Shared, Per MOU					0.0001557										
	Tandem Switching Function Per MOU (Melded)					0.000017904										
	Tandem Trunk Port - Shared, Per MOU (Melded)					0.00002868										
Melded Factor: 18.42% of the Tandem Rate																
Common Transport																
	Common Transport - Per Mile, Per MOU					0.0000027										
	Common Transport - Facilities Termination Per MOU					0.0001914										
UNBUNDLED PORT/LOOP COMBINATIONS - COST BASED RATES																
>Cost Based Rates are applied where BellSouth is required by FCC and/or State Commission rule to provide Unbundled Local Switching or Switch Ports.																
> The UNE-P Switching Port Rates Reflected in the Cost Based Section Apply to Embedded Base UNE-Ps as of March 10, 2005 and Consist of the TELRIC Cost Based Rates Plus $1.00 in Accordance with the TRRO.																
>Features shall apply to the Unbundled Port/Loop Combination - Cost Based Rate section in the same manner as they are applied to the Stand-Alone Unbundled Port section of this Rate Exhibit.																
>End Office and Tandem Switching Usage and Common Transport Usage rates in the Port section of this rate exhibit shall apply to all combinations of loop/port network elements except for UNE Coin Port/Loop Combinations.																
>The first and additional Port nonrecurring charges apply to Not Currently Combined Combos. For Currently Combined Combos the nonrecurring charges shall be those identified in the Nonrecurring - Currently Combined sections.																
2-WIRE VOICE GRADE LOOP WITH 2-WIRE LINE PORT (RES)																
UNE Port/Loop Combination Rates																
	2-Wire VG Loop/Port Combo - Zone 1					11.46										
	2-Wire VG Loop/Port Combo - Zone 2					16.76										
	2-Wire VG Loop/Port Combo - Zone 3					33.56										
UNE Loop Rates																
	2-Wire Voice Grade Loop (SL1) - Zone 1		1	UEPRX	UEPLX	9.56										
	2-Wire Voice Grade Loop (SL1) - Zone 2		2	UEPRX	UEPLX	14.86										
	2-Wire Voice Grade Loop (SL1) - Zone 3		3	UEPRX	UEPLX	31.66										
2-Wire Voice Grade Line Port Rates (Res)																
	2-Wire voice unbundled port - residence			UEPRX	UEPRL	1.9019	10.05	7.36	1.37	1.28						
	2-Wire voice unbundled port with Caller ID - res			UEPRX	UEPRC	1.9019	10.05	7.36	1.37	1.28						
	2-Wire voice unbundled port outgoing only - res			UEPRX	UEPRO	1.9019	10.05	7.36	1.37	1.28						
	2-Wire voice unbundles res, low usage line port with Caller ID (LUM)			UEPRX	UEPAP	1.9019	10.05	7.36	1.37	1.28						
	2-Wire voice unbundled Georgia basic dialing port without Caller ID capability - res			UEPRX	UEPWC	1.9019	10.05	7.36	1.37	1.28						
	2-Wire voice unbundled Georgia basic dialing port for use with Caller ID - res			UEPRX	UEPWQ	1.9019	10.05	7.36	1.37	1.28						
	2-Wire voice unbundled Georgia basic dialing port - outgoing only			UEPRX	UEPWR	1.9019	10.05	7.36	1.37	1.28						
	2-Wire voice unbundled Low Usage Line Port without Caller ID Capability			UEPRX	UEPRT	1.9019	10.05	7.36	1.37	1.28						
	2-Wire Voice Grade Unbundled Port without Caller ID, Georgia			UEPRX	UEPRV	1.9019	10.05	7.36	1.37	1.28						
	2-Wire Voice Grade Unbundled Port with Caller ID, Georgia			UEPRX	UEPRU	1.9019	10.05	7.36	1.37	1.28						
FEATURES																
	All Features Offered			UEPRX	UEPVF	0.775	0.00	0.00								
NONRECURRING CHARGES (NRCs) - CURRENTLY COMBINED																
	2-Wire Voice Grade Loop / Line Port Combination - Conversion - Switch-as-is			UEPRX	USAC2		0.10	0.10								
	2-Wire Voice Grade Loop / Line Port Combination - Conversion - Switch with change			UEPRX	USACC		0.10	0.10								
	2-Wire Voice Grade Loop / Line Port Platform - Installation Charge at QuickService location - Not Conversion of Existing Service			UEPRX	URECC		0.10									
ADDITIONAL NRCs																

CATEGORY	RATE ELEMENTS	Interim	Zone	BCS	USOC	RATES ($)					Svc Order Submitted Elec per LSR	Svc Order Submitted Manually per LSR	Incremental Charge - Manual Svc Order vs. Electronic-1st	Incremental Charge - Manual Svc Order vs. Electronic-Add'l	Incremental Charge - Manual Svc Order vs. Electronic-Disc 1st	Incremental Charge - Manual Svc Order vs. Electronic-Disc Add'l
						Rec	Nonrecurring		Nonrecurring Disconnect		OSS Rates ($)					
							First	Add'l	First	Add'l	SOMEC	SOMAN	SOMAN	SOMAN	SOMAN	SOMAN
	2-Wire Voice Grade Loop/Line Port Combination - Subsequent Activity			UEPRX	USAS2	0.00	0.00	0.00								
	Unbundled Miscellaneous Rate Element, Tag Loop at End User Premise			UEPRX	URETL		8.33	0.83								
OFF/ON PREMISES EXTENSION CHANNELS																
	2 Wire Analog Voice Grade Extension Loop – Non-Design		1	UEPRX	UEAEN	10.51	40.02	9.99	5.61	1.72						
	2 Wire Analog Voice Grade Extension Loop – Non-Design		2	UEPRX	UEAEN	15.85	40.02	9.99	5.61	1.72						
	2 Wire Analog Voice Grade Extension Loop – Non-Design		3	UEPRX	UEAEN	31.97	40.02	9.99	5.61	1.72						
	2 Wire Analog Voice Grade Extension Loop – Design		1	UEPRX	UEAED	11.57	79.85	24.65	18.92	7.87						
	2 Wire Analog Voice Grade Extension Loop – Design		2	UEPRX	UEAED	16.95	79.85	24.65	18.92	7.87						
	2 Wire Analog Voice Grade Extension Loop – Design		3	UEPRX	UEAED	33.08	79.85	24.65	18.92	7.87						
INTEROFFICE TRANSPORT																
	Interoffice Transport - Dedicated - 2 Wire Voice Grade - Facility Termination			UEPRX	U1TV2	12.87	48.46	19.48	16.58	5.00						
	Interoffice Transport - Dedicated - 2 Wire Voice Grade - Per Mile or Fraction Mile			UEPRX	U1TVM	0.0057	0.00	0.00								
2-WIRE VOICE GRADE LOOP WITH 2-WIRE LINE PORT (BUS)																
UNE Port/Loop Combination Rates																
	2-Wire VG Loop/Port Combo - Zone 1					11.46										
	2-Wire VG Loop/Port Combo - Zone 2					16.76										
	2-Wire VG Loop/Port Combo - Zone 3					33.56										
UNE Loop Rates																
	2-Wire Voice Grade Loop (SL1) - Zone 1		1	UEPBX	UEPLX	9.56										
	2-Wire Voice Grade Loop (SL1) - Zone 2		2	UEPBX	UEPLX	14.86										
	2-Wire Voice Grade Loop (SL1) - Zone 3		3	UEPBX	UEPLX	31.66										
2-Wire Voice Grade Line Port (Bus)																
	2-Wire voice unbundled port without Caller ID - bus			UEPBX	UEPBL	1.9019	10.05	7.36	1.37	1.28						
	2-Wire voice unbundled port with Caller + E484 ID - bus			UEPBX	UEPBC	1.9019	10.05	7.36	1.37	1.28						
	2-Wire voice unbundled port outgoing only - bus			UEPBX	UEPBO	1.9019	10.05	7.36	1.37	1.28						
	2-Wire voice unbundled incoming only port with Caller ID - Bus			UEPBX	UEPB1	1.9019	10.05	7.36	1.37	1.28						
	2-Wire voice unbundled Georgia basic dialing port, without Caller ID capability - bus			UEPBX	UEPWD	1.9019	10.05	7.36	1.37	1.28						
	2-Wire voice unbundled Georgia basic dialing port for use with Caller ID - bus			UEPBX	UEPWP	1.9019	10.05	7.36	1.37	1.28						
	2-Wire voice unbundled Incoming Only Port without Caller ID Capability			UEPBX	UEPBE	1.9019	10.05	7.36	1.37	1.28						
FEATURES																
	All Features Offered			UEPBX	UEPVF	0.775	0.00	0.00								
NONRECURRING CHARGES (NRCs) - CURRENTLY COMBINED																
	2-Wire Voice Grade Loop / Line Port Combination - Conversion - Switch-as-is			UEPBX	USAC2		0.10	0.10								
	2-Wire Voice Grade Loop / Line Port Combination - Conversion - Switch with change			UEPBX	USACC		0.10	0.10								
ADDITIONAL NRCs																
	2-Wire Voice Grade Loop/Line Port Combination - Subsequent Activity			UEPBX	USAS2		0.00	0.00								
	Unbundled Miscellaneous Rate Element, Tag Loop at End User Premise			UEPBX	URETL		8.33	0.83								
OFF/ON PREMISES EXTENSION CHANNELS																
	2 Wire Analog Voice Grade Extension Loop – Non-Design		1	UEPBX	UEAEN	10.51	40.02	9.99	5.61	1.72						
	2 Wire Analog Voice Grade Extension Loop – Non-Design		2	UEPBX	UEAEN	15.85	40.02	9.99	5.61	1.72						
	2 Wire Analog Voice Grade Extension Loop – Non-Design		3	UEPBX	UEAEN	31.97	40.02	9.99	5.61	1.72						
	2 Wire Analog Voice Grade Extension Loop – Design		1	UEPBX	UEAED	11.57	79.85	24.65	18.92	7.87						
	2 Wire Analog Voice Grade Extension Loop – Design		2	UEPBX	UEAED	16.95	79.85	24.65	18.92	7.87						
	2 Wire Analog Voice Grade Extension Loop – Design		3	UEPBX	UEAED	33.08	79.85	24.65	18.92	7.87						
INTEROFFICE TRANSPORT																
	Interoffice Transport - Dedicated - 2 Wire Voice Grade - Facility Termination			UEPBX	U1TV2	12.87	48.46	19.48	16.58	5.00						
	Interoffice Transport - Dedicated - 2 Wire Voice Grade - Per Mile or Fraction Mile			UEPBX	U1TVM	0.0057	0.00	0.00								
2-WIRE VOICE GRADE LOOP WITH 2-WIRE LINE PORT (RES - PBX)																
UNE Port/Loop Combination Rates																
	2-Wire VG Loop/Port Combo - Zone 1					11.46										
	2-Wire VG Loop/Port Combo - Zone 2					16.76										

UNBUNDLED NETWORK ELEMENTS - Georgia

Attachment: 2 Ex. A

CATEGORY	RATE ELEMENTS	Interim	Zone	BCS	USOC	RATES ($)					Svc Order Submitted Elec per LSR	Svc Order Submitted Manually per LSR	Incremental Charge - Manual Svc Order vs. Electronic-1st	Incremental Charge - Manual Svc Order vs. Electronic-Add'l	Incremental Charge - Manual Svc Order vs. Electronic-Disc 1st	Incremental Charge - Manual Svc Order vs. Electronic-Disc Add'l
						Rec	Nonrecurring		Nonrecurring Disconnect		OSS Rates ($)					
							First	Add'l	First	Add'l	SOMEC	SOMAN	SOMAN	SOMAN	SOMAN	SOMAN
	2-Wire VG Loop/Port Combo - Zone 3					33.56										
UNE Loop Rates																
	2-Wire Voice Grade Loop (SL 1) - Zone 1		1	UEPRG	UEPLX	9.56										
	2-Wire Voice Grade Loop (SL 1) - Zone 2		2	UEPRG	UEPLX	14.86										
	2-Wire Voice Grade Loop (SL 1) - Zone 3		3	UEPRG	UEPLX	31.66										
2-Wire Voice Grade Line Port Rates (RES - PBX)																
	2-Wire VG Unbundled Combination 2-Way PBX Trunk Port - Res			UEPRG	UEPRD	1.9019	10.05	7.36	1.37	1.28						
FEATURES																
	All Features Offered			UEPRG	UEPVF	0.775	0.00	0.00								
NONRECURRING CHARGES (NRCs) - CURRENTLY COMBINED																
	2-Wire Voice Grade Loop/ Line Port Combination (PBX) - Conversion - Switch-As-Is			UEPRG	USAC2		0.10	0.10								
	2-Wire Voice Grade Loop/ Line Port Combination (PBX) - Conversion - Switch with Change			UEPRG	USACC		0.10	0.10								
ADDITIONAL NRCs																
	2-Wire Voice Grade Loop/ Line Port Combination (PBX) - Subsequent Activity			UEPRG	USAS2	0.00	0.00	0.00								
	PBX Subsequent Activity - Change/Rearrange Multiline Hunt Group						6.70	6.70								
	Unbundled Miscellaneous Rate Element, Tag Loop at End User Premise			UEPRG	URETL		8.33	0.83								
OFF/ON PREMISES EXTENSION CHANNELS																
	Local Channel Voice grade, per termination		1	UEPRG	P2JHX	11.57	79.85	24.65	18.92	7.87						
	Local Channel Voice grade, per termination		2	UEPRG	P2JHX	16.95	79.85	24.65	18.92	7.87						
	Local Channel Voice grade, per termination		3	UEPRG	P2JHX	33.08	79.85	24.65	18.92	7.87						
	Non-Wire Direct Serve Channel Voice Grade		1	UEPRG	SDD2X	12.74	56.92	7.70	4.40	0.02						
	Non-Wire Direct Serve Channel Voice Grade		2	UEPRG	SDD2X	19.76	56.92	7.70	4.40	0.02						
	Non-Wire Direct Serve Channel Voice Grade		3	UEPRG	SDD2X	37.18	56.92	7.70	4.40	0.02						
INTEROFFICE TRANSPORT																
	Interoffice Transport - Dedicated - 2 Wire Voice Grade - Facility Termination			UEPRG	U1TV2	12.87	48.46	19.48	16.58	5.00						
	Interoffice Transport - Dedicated - 2 Wire Voice Grade - Per Mile or Fraction Mile			UEPRG	U1TVM	0.0057	0.00	0.00								
2-WIRE VOICE GRADE LOOP WITH 2-WIRE LINE PORT (BUS - PBX)																
UNE Port/Loop Combination Rates																
	2-Wire VG Loop/Port Combo - Zone 1					11.46										
	2-Wire VG Loop/Port Combo - Zone 2					16.76										
	2-Wire VG Loop/Port Combo - Zone 3					33.56										
UNE Loop Rates																
	2-Wire Voice Grade Loop (SL 1) - Zone 1		1	UEPPX	UEPLX	9.56										
	2-Wire Voice Grade Loop (SL 1) - Zone 2		2	UEPPX	UEPLX	14.86										
	2-Wire Voice Grade Loop (SL 1) - Zone 3		3	UEPPX	UEPLX	31.66										
2-Wire Voice Grade Line Port Rates (BUS - PBX)																
	Line Side Unbundled Combination 2-Way PBX Trunk Port - Bus			UEPPX	UEPPC	1.9019	10.05	7.36	1.37	1.28						
	Line Side Unbundled Outward PBX Trunk Port - Bus			UEPPX	UEPPO	1.9019	10.05	7.36	1.37	1.28						
	Line Side Unbundled Incoming PBX Trunk Port - Bus			UEPPX	UEPP1	1.9019	10.05	7.36	1.37	1.28						
	2-Wire Voice Unbundled PBX LD Terminal Ports			UEPPX	UEPLD	1.9019	10.05	7.36	1.37	1.28						
	2-Wire Voice Unbundled 2-Way Combination PBX Usage Port			UEPPX	UEPXA	1.9019	10.05	7.36	1.37	1.28						
	2-Wire Voice Unbundled PBX Toll Terminal Hotel Ports			UEPPX	UEPXB	1.9019	10.05	7.36	1.37	1.28						
	2-Wire Voice Unbundled PBX LD DDD Terminals Port			UEPPX	UEPXC	1.9019	10.05	7.36	1.37	1.28						
	2-Wire Voice Unbundled PBX LD Terminal Switchboard Port			UEPPX	UEPXD	1.9019	10.05	7.36	1.37	1.28						
	2-Wire Voice Unbundled PBX LD Terminal Switchboard IDD Capable Port			UEPPX	UEPXE	1.9019	10.05	7.36	1.37	1.28						
	2-Wire Voice Unbundled 2-Way PBX Hotel/Hospital Economy Administrative Calling Port			UEPPX	UEPXL	1.9019	10.05	7.36	1.37	1.28						
	2-Wire Voice Unbundled 2-Way PBX Hotel/Hospital Economy Room Calling Port			UEPPX	UEPXM	1.9019	10.05	7.36	1.37	1.28						
	2-Wire Voice Unbundled 1-Way Outgoing PBX Hotel/Hospital Discount Room Calling Port			UEPPX	UEPXO	1.9019	10.05	7.36	1.37	1.28						
	2-Wire Voice Unbundled 1-Way Outgoing PBX Measured Port			UEPPX	UEPXS	1.9019	10.05	7.36	1.37	1.28						
	2-Wire voice unbundled Georgia basic dialing port - 1-Way Oudial Trunk			UEPPX	UEPWS	1.9019	10.05	7.36	1.37	1.28						

CATEGORY	RATE ELEMENTS	Interim	Zone	BCS	USOC	RATES ($)					Svc Order Submitted Elec per LSR	Svc Order Submitted Manually per LSR	Incremental Charge - Manual Svc Order vs. Electronic-1st	Incremental Charge - Manual Svc Order vs. Electronic-Add'l	Incremental Charge - Manual Svc Order vs. Electronic-Disc 1st	Incremental Charge - Manual Svc Order vs. Electronic-Disc Add'l
						Rec	Nonrecurring		Nonrecurring Disconnect		OSS Rates ($)					
							First	Add'l	First	Add'l	SOMEC	SOMAN	SOMAN	SOMAN	SOMAN	SOMAN
	2-Wire voice unbundled Georgia basic dialing port - 2-Way Trunk			UEPPX	UEPWT	1.9019	10.05	7.36	1.37	1.28						
	2-Wire voice unbundled Georgia basic dialing port - 2-way PBX Trunk			UEPPX	UEPPQ	1.9019	10.05	7.36	1.37	1.28						
	2-Wire voice unbundled Georgia basic dialing port - PBX LD Terminal Ports					1.9019	10.05	7.36	1.37	1.28						
	2-Wire voice unbundled Georgia basic dialing port - PBX Toll Terminal Ports					1.9019	10.05	7.36	1.37	1.28						
	2-Wire voice unbundled Georgia basic dialing port - PBX LD DDD Terminal Port					1.9019	10.05	7.36	1.37	1.28						
	2-Wire voice unbundled Georgia basic dialing port - PBX LD Terminal Switchboard Port					1.9019	10.05	7.36	1.37	1.28						
	2-Wire voice unbundled Georgia basic dialing port - PBX LD Terminal Switchboard DDD Capable Port					1.9019	10.05	7.36	1.37	1.28						
	2-Wire voice unbundled Georgia basic dialing port - PBX 2-Way Trunk			UEPPX	UEPPC	1.9019	10.05	7.36	1.37	1.28						
FEATURES																
	All Features Offered			UEPPX	UEPVF	0.775	0.00	0.00								
NONRECURRING CHARGES (NRCs) - CURRENTLY COMBINED																
	2-Wire Voice Grade Loop/ Line Port Combination (PBX) - Conversion - Switch-As-Is			UEPPX	USAC2		0.10	0.10								
	2-Wire Voice Grade Loop/ Line Port Combination (PBX) - Conversion - Switch with Change			UEPPX	USACC		0.10	0.10								
ADDITIONAL NRCs																
	2-Wire Voice Grade Loop/ Line Port Combination (PBX) - Subsequent Activity			UEPPX	USAS2	0.00	0.00	0.00								
	PBX Subsequent Activity - Change/Rearrange Multiline Hunt Group						6.70	6.70								
	Unbundled Miscellaneous Rate Element, Tag Loop at End User Premise			UEPPX	URETL		8.33	0.83								
OFF/ON PREMISES EXTENSION CHANNELS																
	Local Channel Voice grade, per termination		1	UEPPX	P2JHX	11.57	79.85	24.65	18.92	7.87						
	Local Channel Voice grade, per termination		2	UEPPX	P2JHX	16.95	79.85	24.65	18.92	7.87						
	Local Channel Voice grade, per termination		3	UEPPX	P2JHX	33.08	79.85	24.65	18.92	7.87						
	Non-Wire Direct Serve Channel Voice Grade		1	UEPPX	SDD2X	12.74	56.92	7.70	4.40	0.02						
	Non-Wire Direct Serve Channel Voice Grade		2	UEPPX	SDD2X	19.76	56.92	7.70	4.40	0.02						
	Non-Wire Direct Serve Channel Voice Grade		3	UEPPX	SDD2X	37.18	56.92	7.70	4.40	0.02						
INTEROFFICE TRANSPORT																
	Interoffice Transport - Dedicated - 2 Wire Voice Grade - Facility Termination			UEPPX	U1TV2	12.87	48.46	19.48	16.58	5.00						
	Interoffice Transport - Dedicated - 2 Wire Voice Grade - Per Mile or Fraction Mile			UEPPX	U1TVM	0.0057	0.00	0.00								
2-WIRE VOICE GRADE LOOP WITH 2-WIRE ANALOG LINE COIN PORT																
UNE Port/Loop Combination Rates																
	2-Wire VG Coin Port/Loop Combo – Zone 1					11.46										
	2-Wire VG Coin Port/Loop Combo – Zone 2					16.76										
	2-Wire VG Coin Port/Loop Combo – Zone 3					33.56										
UNE Loop Rates																
	2-Wire Voice Grade Loop (SL1) - Zone 1		1	UEPCO	UEPLX	9.56										
	2-Wire Voice Grade Loop (SL1) - Zone 2		2	UEPCO	UEPLX	14.86										
	2-Wire Voice Grade Loop (SL1) - Zone 3		3	UEPCO	UEPLX	31.66										
2-Wire Voice Grade Line Ports (COIN)																
	2-Wire Coin 2-Way with Operator Screening (GA)			UEPCO	UEPGC	1.9019	10.05	7.36	1.37	1.28						
	2-Wire Coin 2-Way with Operator Screening and Blocking: 011, 900/976, 1+DDD (GA)			UEPCO	UEP2G	1.9019	10.05	7.36	1.37	1.28						
	2-Wire Coin 2-Way with Operator Screening and 011 Blocking (GA)			UEPCO	UEPGA	1.9019	10.05	7.36	1.37	1.28						
	2-Wire Coin 2-Way with Operator Screening and 900/976 Blocking (GA)			UEPCO	UEPGB	1.9019	10.05	7.36	1.37	1.28						
	2-Wire Coin 2-Way with Operator Screening and Blocking: 900/976, 1+DDD, 011+, and Local (GA)			UEPCO	UEPCH	1.9019	10.05	7.36	1.37	1.28						
	2-Wire Coin Outward with Operator Screening and 011 Blocking (GA, KY, MS)			UEPCO	UEPRJ	1.9019	10.05	7.36	1.37	1.28						

UNBUNDLED NETWORK ELEMENTS - Georgia

Attachment: 2 Ex. A

CATEGORY	RATE ELEMENTS	Interim	Zone	BCS	USOC	RATES ($)					Svc Order Submitted Elec per LSR	Svc Order Submitted Manually per LSR	Incremental Charge - Manual Svc Order vs. Electronic-1st	Incremental Charge - Manual Svc Order vs. Electronic-Add'l	Incremental Charge - Manual Svc Order vs. Electronic-Disc 1st	Incremental Charge - Manual Svc Order vs. Electronic-Disc Add'l
						Rec	Nonrecurring		Nonrecurring Disconnect		OSS Rates ($)					
							First	Add'l	First	Add'l	SOMEC	SOMAN	SOMAN	SOMAN	SOMAN	SOMAN
	2-Wire Coin Outward with Operator Screening and Blocking: 900/976, 1+DDD, 011+, and Local (FL, GA)			UEPCO	UEPCQ	1.9019	10.05	7.36	1.37	1.28						
	2-Wire 2-Way Smartline with 900/976 (all states except LA)			UEPCO	UEPCK	1.9019	10.05	7.36	1.37	1.28						
	2-Wire Coin Outward Smartline with 900/976 (all states except LA)			UEPCO	UEPCR	1.9019	10.05	7.36	1.37	1.28						
ADDITIONAL UNE COIN PORT/LOOP (RC)																
	UNE Coin Port/Loop Combo Usage (Flat Rate)			UEPCO	URECU	3.59	0.00	0.00	0.00	0.00						
NONRECURRING CHARGES - CURRENTLY COMBINED																
	2-Wire Voice Grade Loop / Line Port Combination - Conversion - Switch-as-is			UEPCO	USAC2		0.10	0.10								
	2-Wire Voice Grade Loop / Line Port Combination - Conversion - Switch with change			UEPCO	USACC		0.10	0.10								
ADDITIONAL NRCs																
	2-Wire Voice Grade Loop/Line Port Combination - Subsequent Activity			UEPCO	USAS2		0.00	0.00								
	Unbundled Miscellaneous Rate Element, Tag Loop at End User Premise			UEPCO	URETL		8.33	0.83								
2-WIRE VOICE LOOP/ 2WIRE VOICE GRADE IO TRANSPORT/ 2-WIRE LINE PORT (RES)																
UNE Port/Loop Combination Rates																
	2-Wire VG Loop/IO Tranport/Port Combo - Zone 1					26.53										
	2-Wire VG Loop/IO Tranport/Port Combo - Zone 2					31.92										
	2-Wire VG Loop/IO Tranport/Port Combo - Zone 3					48.04										
UNE Loop Rates																
	2-Wire Voice Grade Loop (SL2) - Zone 1		1	UEPFR	UECF2	11.57										
	2-Wire Voice Grade Loop (SL2) - Zone 2		2	UEPFR	UECF2	16.95										
	2-Wire Voice Grade Loop (SL2) - Zone 3		3	UEPFR	UECF2	33.08										
2-Wire Voice Grade Line Port Rates (Res)																
	2-Wire voice unbundled port - residence			UEPFR	UEPRL	2.09	166.05	43.66	41.89	15.44						
	2-Wire voice unbundled port with Caller ID - res			UEPFR	UEPRC	2.09	166.05	43.66	41.89	15.44						
	2-Wire voice unbundled port outgoing only - res			UEPFR	UEPRO	2.09	166.05	43.66	41.89	15.44						
	2-Wire voice unbundles res, low usage line port with Caller ID (LUM)			UEPFR	UEPAP	2.09	166.05	43.66	41.89	15.44						
	2-Wire voice unbundled Georgia basic dialing port, without Caller ID capability - res			UEPFR	UEPWC	2.09	166.05	43.66	41.89	15.44						
	2-Wire voice unbundled Georgia basic dialing port for use with Caller ID - res			UEPFR	UEPWQ	2.09	166.05	43.66	41.89	15.44						
	2-Wire voice unbundled Georgia basic dialing port - outgoing only			UEPFR	UEPWR	2.09	166.05	43.66	41.89	15.44						
INTEROFFICE TRANSPORT																
	Interoffice Transport - Dedicated - 2 Wire Voice Grade - Facility Termination			UEPFR	U1TV2	12.87	48.46	19.48	16.58	5.00						
	Interoffice Transport - Dedicated - 2 Wire Voice Grade - Per Mile or Fraction Mile			UEPFR	1L5XX	0.0057	0.00	0.00								
FEATURES																
	All Features Offered			UEPFR	UEPVF	0.775	0.00	0.00								
NONRECURRING CHARGES (NRCs) - CURRENTLY COMBINED																
	2-Wire Loop / Dedicated IO Transport / 2 Wire Line Port Combination - Conversion - Switch-as-is			UEPFR	USAC2		7.85	1.86								
	2-Wire Loop / Dedicated IO Transport / 2 Wire Line Port Combination - Conversion - Switch-With-Change			UEPFR	USACC		7.85	1.86								
	Unbundled Miscellaneous Rate Element, Tag Designed Loop at End User Premise			UEPFR	URETN		11.19	1.10								
2-WIRE VOICE LOOP/ 2WIRE VOICE GRADE IO TRANSPORT/ 2-WIRE LINE PORT (BUS)																
UNE Port/Loop Combination Rates																
	2-Wire VG Loop/IO Tranport/Port Combo - Zone 1					26.53										
	2-Wire VG Loop/IO Tranport/Port Combo - Zone 2					31.92										
	2-Wire VG Loop/IO Tranport/Port Combo - Zone 3					48.04										
UNE Loop Rates																
	2-Wire Voice Grade Loop (SL2) - Zone 1		1	UEPFB	UECF2	11.57										
	2-Wire Voice Grade Loop (SL2) - Zone 2		2	UEPFB	UECF2	16.95										
	2-Wire Voice Grade Loop (SL2) - Zone 3		3	UEPFB	UECF2	33.08										
2-Wire Voice Grade Line Port (Bus)																
	2-Wire voice unbundled port without Caller ID - bus			UEPFB	UEPBL	2.09	166.05	43.66	41.89	15.44						
	2-Wire voice unbundled port with Caller + E484 ID - bus			UEPFB	UEPBC	2.09	166.05	43.66	41.89	15.44						

UNBUNDLED NETWORK ELEMENTS - Georgia

Attachment: 2 Ex. A

CATEGORY	RATE ELEMENTS	Interim	Zone	BCS	USOC	RATES ($)					Svc Order Submitted Elec per LSR	Svc Order Submitted Manually per LSR	Incremental Charge - Manual Svc Order vs. Electronic-1st	Incremental Charge - Manual Svc Order vs. Electronic-Add'l	Incremental Charge - Manual Svc Order vs. Electronic-Disc 1st	Incremental Charge - Manual Svc Order vs. Electronic-Disc Add'l
						Rec	Nonrecurring		Nonrecurring Disconnect		OSS Rates ($)					
							First	Add'l	First	Add'l	SOMEC	SOMAN	SOMAN	SOMAN	SOMAN	SOMAN
	2-Wire voice unbundled port outgoing only - bus			UEPFB	UEPBO	2.09	166.05	43.66	41.89	15.44						
	2-Wire voice unbundled incoming only port with Caller ID - Bus			UEPFB	UEPB1	2.09	166.05	43.66	41.89	15.44						
	2-Wire voice unbundled Georgia basic dialing port, without Caller ID capability - bus			UEPFB	UEPWD	2.09	166.05	43.66	41.89	15.44						
	2-Wire voice unbundled Georgia basic dialing port for use with Caller ID - bus			UEPFB	UEPWP	2.09	166.05	43.66	41.89	15.44						
INTEROFFICE TRANSPORT																
	Interoffice Transport - Dedicated - 2 Wire Voice Grade - Facility Termination			UEPFB	U1TV2	12.87	48.46	19.48	16.58	5.00						
	Interoffice Transport - Dedicated - 2 Wire Voice Grade - Per Mile or Fraction Mile			UEPFB	1L5XX	0.0057	0.00	0.00								
FEATURES																
	All Features Offered			UEPFB	UEPVF	0.775	0.00	0.00								
NONRECURRING CHARGES (NRCs) - CURRENTLY COMBINED																
	2-Wire Loop / Dedicated IO Transport / 2 Wire Line Port Combination - Conversion - Switch-as-is			UEPFB	USAC2		7.85	1.86								
	2-Wire Loop / Dedicated IO Transport / 2 Wire Line Port Combination - Conversion - Switch with change			UEPFB	USACC		7.85	1.86								
	Unbundled Miscellaneous Rate Element, Tag Designed Loop at End User Premise			UEPFB	URETN		11.19	1.10								
2-WIRE VOICE LOOP/ 2WIRE VOICE GRADE IO TRANSPORT/ 2-WIRE LINE PORT (PBX)																
UNE Port/Loop Combination Rates																
	2-Wire VG Loop/IO Tranport/Port Combo - Zone 1					26.53										
	2-Wire VG Loop/IO Tranport/Port Combo - Zone 2					31.92										
	2-Wire VG Loop/IO Tranport/Port Combo - Zone 3					48.04										
UNE Loop Rates																
	2-Wire Voice Grade Loop (SL2) - Zone 1		1	UEPFP	UECF2	11.57										
	2-Wire Voice Grade Loop (SL2) - Zone 2		2	UEPFP	UECF2	16.95										
	2-Wire Voice Grade Loop (SL2) - Zone 3		3	UEPFP	UECF2	33.08										
2-Wire Voice Grade Line Port Rates (BUS - PBX)																
	Line Side Unbundled Combination 2-Way PBX Trunk Port - Bus			UEPFP	UEPPC	2.09	166.05	43.66	41.89	15.44						
	Line Side Unbundled Outward PBX Trunk Port - Bus			UEPFP	UEPPO	2.09	166.05	43.66	41.89	15.44						
	Line Side Unbundled Incoming PBX Trunk Port - Bus			UEPFP	UEPP1	2.09	166.05	43.66	41.89	15.44						
	2-Wire Voice Unbundled PBX LD Terminal Ports			UEPFP	UEPLD	2.09	166.05	43.66	41.89	15.44						
	2-Wire Voice Unbundled 2-Way Combination PBX Usage Port			UEPFP	UEPXA	2.09	166.05	43.66	41.89	15.44						
	2-Wire Voice Unbundled PBX Toll Terminal Hotel Ports			UEPFP	UEPXB	2.09	166.05	43.66	41.89	15.44						
	2-Wire Voice Unbundled PBX LD DDD Terminals Port			UEPFP	UEPXC	2.09	166.05	43.66	41.89	15.44						
	2-Wire Voice Unbundled PBX LD Terminal Switchboard Port			UEPFP	UEPXD	2.09	166.05	43.66	41.89	15.44						
	2-Wire Voice Unbundled PBX LD Terminal Switchboard IDD Capable Port			UEPFP	UEPXE	2.09	166.05	43.66	41.89	15.44						
	2-Wire Voice Unbundled 2-Way PBX Hotel/Hospital Economy Administrative Calling Port			UEPFP	UEPXL	2.09	166.05	43.66	41.89	15.44						
	2-Wire Voice Unbundled 2-Way PBX Hotel/Hospital Economy Room Calling Port			UEPFP	UEPXM	2.09	166.05	43.66	41.89	15.44						
	2-Wire Voice Unbundled 1-Way Outgoing PBX Hotel/Hospital Discount Room Calling Port			UEPFP	UEPXO	2.09	166.05	43.66	41.89	15.44						
	2-Wire Voice Unbundled 1-Way Outgoing PBX Measured Port			UEPFP	UEPXS	2.09	166.05	43.66	41.89	15.44						
	2-Wire voice unbundled Georgia basic dialing port - 1-Way Oudial Trunk			UEPFP	UEPWS	2.09	166.05	43.66	41.89	15.44						
	2-Wire voice unbundled Georgia basic dialing port - 2-Way Trunk			UEPFP	UEPWT	2.09	166.05	43.66	41.89	15.44						
INTEROFFICE TRANSPORT																
	Interoffice Transport - Dedicated - 2 Wire Voice Grade - Facility Termination			UEPFP	U1TV2	12.87	48.46	19.48	16.58	5.00						
	Interoffice Transport - Dedicated - 2 Wire Voice Grade - Per Mile or Fraction Mile			UEPFP	1L5XX	0.0057	0.00	0.00								
FEATURES																
	All Features Offered			UEPFP	UEPVF	0.775	0.00	0.00								
NONRECURRING CHARGES (NRCs) - CURRENTLY COMBINED																
	2-Wire Loop / Dedicated IO Transport / 2 Wire Line Port Combination - Conversion - Switch-as-is			UEPFP	USAC2		7.85	1.86								
	2-Wire Loop / Dedicated IO Transport / 2 Wire Line Port Combination - Conversion - Switch with change			UEPFP	USACC		7.85	1.86								

CATEGORY	RATE ELEMENTS	Interim	Zone	BCS	USOC	RATES ($) Rec	Nonrecurring First	Nonrecurring Add'l	Nonrecurring Disconnect First	Nonrecurring Disconnect Add'l	Svc Order Submitted Elec per LSR (OSS Rates ($)) SOMEC	Svc Order Submitted Manually per LSR (OSS Rates ($)) SOMAN	Incremental Charge - Manual Svc Order vs. Electronic-1st (OSS Rates ($)) SOMAN	Incremental Charge - Manual Svc Order vs. Electronic-Add'l (OSS Rates ($)) SOMAN	Incremental Charge - Manual Svc Order vs. Electronic-Disc 1st (OSS Rates ($)) SOMAN	Incremental Charge - Manual Svc Order vs. Electronic-Disc Add'l (OSS Rates ($)) SOMAN
	Unbundled Miscellaneous Rate Element, Tag Designed Loop at End User Premise			UEPFP	URETN		11.19	1.10								
2-WIRE VOICE GRADE LOOP- BUS ONLY - WITH 2-WIRE DID TRUNK PORT																
UNE Port/Loop Combination Rates																
	2-Wire VG Loop/2-Wire DID Trunk Port Combo - UNE Zone 1					18.05										
	2-Wire VG Loop/2-Wire DID Trunk Port Combo - UNE Zone 2					23.44										
	2-Wire VG Loop/2-Wire DID Trunk Port Combo - UNE Zone 3					39.56										
UNE Loop Rates																
	2-Wire Analog Voice Grade Loop - (SL2) - UNE Zone 1		1	UEPPX	UECD1	11.57										
	2-Wire Analog Voice Grade Loop - (SL2) - UNE Zone 2		2	UEPPX	UECD1	16.95										
	2-Wire Analog Voice Grade Loop - (SL2) - UNE Zone 3		3	UEPPX	UECD1	33.08										
UNE Port Rate																
	Exchange Ports - 2-Wire DID Port			UEPPX	UEPD1	6.48	174.55	13.64	59.31	4.27						
NONRECURRING CHARGES - CURRENTLY COMBINED																
	2-Wire Voice Grade Loop / 2-Wire DID Trunk Port Combination - Switch-as-is			UEPPX	USAC1		6.66	1.86								
	2-Wire Voice Grade Loop / 2-Wire DID Trunk Port Conversion with BellSouth Allowable Changes			UEPPX	USA1C		6.66	1.86								
ADDITIONAL NRCs																
	Unbundled Miscellaneous Rate Element, Tag Designed Loop at End User Premise			UEPPX	URETN		11.19	1.10								
Telephone Number/Trunk Group Establisment Charges																
	DID Trunk Termination (One Per Port)			UEPPX	NDT	0.00	0.00	0.00								
	DID Numbers, Establish Trunk Group and Provide First Group of 20 DID Numbers			UEPPX	NDZ	0.00	0.00	0.00								
	Additional DID Numbers for each Group of 20 DID Numbers			UEPPX	ND4	0.00	0.00	0.00								
	DID Numbers, Non- consecutive DID Numbers , Per Number			UEPPX	ND5	0.00	0.00	0.00								
	Reserve Non-Consecutive DID numbers			UEPPX	ND6	0.00	0.00	0.00								
	Reserve DID Numbers			UEPPX	NDV	0.00	0.00	0.00								
2-WIRE ISDN DIGITAL GRADE LOOP WITH 2-WIRE ISDN DIGITAL LINE SIDE PORT																
UNE Port/Loop Combination Rates																
	2W ISDN Digital Grade Loop/2W ISDN Digital Line Side Port - UNE Zone 1					20.44										
	2W ISDN Digital Grade Loop/2W ISDN Digital Line Side Port - UNE Zone 2					25.45										
	2W ISDN Digital Grade Loop/2W ISDN Digital Line Side Port - UNE Zone 3					39.09										
UNE Loop Rates																
	2-Wire ISDN Digital Grade Loop - UNE Zone 1		1	UEPPB UEPPR	USL2X	14.25										
	2-Wire ISDN Digital Grade Loop - UNE Zone 2		2	UEPPB UEPPR	USL2X	19.26										
	2-Wire ISDN Digital Grade Loop - UNE Zone 3		3	UEPPB UEPPR	USL2X	32.90										
UNE Port Rate																
	Exchange Port - 2-Wire ISDN Line Side Port			UEPPR	UEPPR	6.19	161.36	141.68	43.68	8.37						
	Exchange Port - 2-Wire ISDN Line Side Port			UEPPB	UEPPB	6.19	161.36	141.68	43.68	8.37						
NONRECURRING CHARGES - CURRENTLY COMBINED																
	2-Wire ISDN Digital Grade Loop / 2-Wire ISDN Line Side Port Combination - Conversion			UEPPB UEPPR	USACB	0.00	42.52	26.99								
ADDITIONAL NRCs																
	2-Wire ISDN Loop / 2-Wire ISDN Port Combination - Sub Actvy - Non Feature/Add Trunk			UEPPB UEPPR	USASB		0.00									
	Unbundled Miscellaneous Rate Element, Tag Designed Loop at End User Premise			UEPPB UEPPR	URETN		11.19	1.10								
	Unbundled Miscellaneous Rate Element, Tag Loop at End User Premise			UEPPB UEPPR	URETL		8.33	0.83								
B-CHANNEL USER PROFILE ACCESS:																
	CVS/CSD (DMS/5ESS)			UEPPB UEPPR	U1UCA	0.00	0.00	0.00								
	CVS (EWSD)			UEPPB UEPPR	U1UCB	0.00	0.00	0.00								
	CSD			UEPPB UEPPR	U1UCC	0.00	0.00	0.00								
B-CHANNEL AREA PLUS USER PROFILE ACCESS: (AL,KY,LA,MS SC,MS, & TN)																
USER TERMINAL PROFILE																
	User Terminal Profile (EWSD only)			UEPPB UEPPR	U1UMA	0.00	0.00	0.00								
VERTICAL FEATURES																
	All Vertical Features - One per Channel B User Profile			UEPPB UEPPR	UEPVF	0.775	0.00	0.00								

UNBUNDLED NETWORK ELEMENTS - Georgia

Attachment: 2 Ex. A

CATEGORY	RATE ELEMENTS	Interim	Zone	BCS	USOC	RATES ($) Rec	Nonrecurring First	Nonrecurring Add'l	Nonrecurring Disconnect First	Nonrecurring Disconnect Add'l	Svc Order Submitted Elec per LSR	Svc Order Submitted Manually per LSR	Incremental Charge - Manual Svc Order vs. Electronic-1st	Incremental Charge - Manual Svc Order vs. Electronic-Add'l	Incremental Charge - Manual Svc Order vs. Electronic-Disc 1st	Incremental Charge - Manual Svc Order vs. Electronic-Disc Add'l
											OSS Rates ($)					
							First	Add'l	First	Add'l	SOMEC	SOMAN	SOMAN	SOMAN	SOMAN	SOMAN
INTEROFFICE CHANNEL MILEAGE																
	Interoffice Channel mileage each, including first mile and facilities termination			UEPPB UEPPR	M1GNC	12.8757	48.46	19.48	16.58	5.00						
	Interoffice Channel mileage each, additional mile			UEPPB UEPPR	M1GNM	0.0057	0.00	0.00								
UNBUNDLED CENTREX PORT/LOOP COMBINATIONS - COST BASED RATES																
UNE-P CENTREX - 1AESS - (Valid in AL,FL,GA,KY,LA,MS,&TN only)																
2-Wire VG Loop/2-Wire Voice Grade Port (Centrex) Combo																
UNE Port/Loop Combination Rates (Non-Design)																
	2-Wire VG Loop/2-Wire Voice Grade Port (Centrex) Port Combo - Non-Design					11.46										
	2-Wire VG Loop/2-Wire Voice Grade Port (Centrex)Port Combo - Non-Design					16.76										
	2-Wire VG Loop/2-Wire Voice Grade Port (Centrex)Port Combo - Non-Design					33.56										
UNE Port/Loop Combination Rates (Design)																
	2-Wire VG Loop/2-Wire Voice Grade Port (Centrex) Port Combo - Design					13.47										
	2-Wire VG Loop/2-Wire Voice Grade Port (Centrex)Port Combo - Design					18.85										
	2-Wire VG Loop/2-Wire Voice Grade Port (Centrex)Port Combo - Design					34.98										
UNE Loop Rate																
	2-Wire Voice Grade Loop (SL 1) - Zone 1		1	UEP91	UECS1	9.56										
	2-Wire Voice Grade Loop (SL 1) - Zone 2		2	UEP91	UECS1	14.86										
	2-Wire Voice Grade Loop (SL 1) - Zone 3		3	UEP91	UECS1	31.66										
	2-Wire Voice Grade Loop (SL 2) - Zone 1		1	UEP91	UECS2	11.57										
	2-Wire Voice Grade Loop (SL 2) - Zone 2		2	UEP91	UECS2	16.95										
	2-Wire Voice Grade Loop (SL 2) - Zone 3		3	UEP91	UECS2	33.08										
UNE Ports																
All States (Except North Carolina and Sout Carolina)																
	2-Wire Voice Grade Port (Centrex) Basic Local Area			UEP91	UEPYA	1.9019	10.05	7.36	1.37	1.28						
	2-Wire Voice Grade Port (Centrex 800 termination)Basic Local Area			UEP91	UEPYB	1.9019	10.05	7.36	1.37	1.28						
	2-Wire Voice Grade Port (Centrex with Caller ID)Note1 Basic Local Area			UEP91	UEPYH	1.9019	10.05	7.36	1.37	1.28						
	2-Wire Voice Grade Port (Centrex from diff Serving Wire Center) Note 2, 3 Basic Local Area			UEP91	UEPYM	1.9019	82.27	26.96	20.29	9.15						
	2-Wire Voice Grade Port, Diff Serving Wire Center - 800 Service Term - Basic Local Area			UEP91	UEPYZ	1.9019	82.27	26.96	20.29	9.15						
	2-Wire Voice Grade Port terminated in on Megalink or equivalent - Basic Local Area			UEP91	UEPY9	1.9019	10.05	7.36	1.37	1.28						
	2-Wire Voice Grade Port Terminated on 800 Service Term - Basic Local Area			UEP91	UEPY2	1.9019	10.05	7.36	1.37	1.28						
Georgia and Florida Only																
	2-Wire Voice Grade Port (Centrex)			UEP91	UEPHA	1.9019	10.05	7.36	1.37	1.28						
	2-Wire Voice Grade Port (Centrex 800 termination)			UEP91	UEPHB	1.9019	10.05	7.36	1.37	1.28						
	2-Wire Voice Grade Port (Centrex with Caller ID)1			UEP91	UEPHH	1.9019	10.05	7.36	1.37	1.28						
	2-Wire Voice Grade Port (Centrex from diff Serving Wire Center)2,3			UEP91	UEPHM	1.9019	82.27	26.96	20.29	9.15						
	2-Wire Voice Grade Port, Diff Serving Wire Center 2,3 - 800 Service Term			UEP91	UEPHZ	1.9019	82.27	26.96	20.29	9.15						
	2-Wire Voice Grade Port terminated in on Megalink or equivalent			UEP91	UEPH9	1.9019	10.05	7.36	1.37	1.28						
	2-Wire Voice Grade Port Terminated on 800 Service Term			UEP91	UEPH2	1.9019	10.05	7.36	1.37	1.28						
Local Switching																
	Centrex Intercom Funtionality, per port			UEP91	URECS	0.4237										
Features																
	All Standard Features Offered, per port			UEP91	UEPVF	0.775										
	All Select Features Offered, per port			UEP91	UEPVS	0.00	0.00									
	All Centrex Control Features Offered, per port			UEP91	UEPVC	0.00										
NARS																
	Unbundled Network Access Register - Combination			UEP91	UARCX	0.00	0.00	0.00	0.00	0.00						
	Unbundled Network Access Register - Indial			UEP91	UAR1X	0.00	0.00	0.00	0.00	0.00						
	Unbundled Network Access Register - Outdial			UEP91	UAROX	0.00	0.00	0.00	0.00	0.00						

UNBUNDLED NETWORK ELEMENTS - Georgia

Attachment: 2 Ex. A

CATEGORY	RATE ELEMENTS	Interim	Zone	BCS	USOC	RATES ($) Rec	Nonrecurring First	Nonrecurring Add'l	Nonrecurring Disconnect First	Nonrecurring Disconnect Add'l	Svc Order Submitted Elec per LSR	Svc Order Submitted Manually per LSR	Incremental Charge - Manual Svc Order vs. Electronic-1st	Incremental Charge - Manual Svc Order vs. Electronic-Add'l	Incremental Charge - Manual Svc Order vs. Electronic-Disc 1st	Incremental Charge - Manual Svc Order vs. Electronic-Disc Add'l
											OSS Rates ($)					
							First	Add'l	First	Add'l	SOMEC	SOMAN	SOMAN	SOMAN	SOMAN	SOMAN
Miscellaneous Terminations																
2-Wire Trunk Side																
	Trunk Side Terminations, each			UEP91	CENA6	5.50	122.26	18.65	54.82	3.45						
Interoffice Channel Mileage - 2-Wire																
	Interoffice Channel Facilities Termination - Voice Grade			UEP91	M1GBC	12.87	48.46	19.48	16.58	5.00						
	Interoffice Channel mileage, per mile or fraction of mile			UEP91	M1GBM	0.0057										
Feature Activations (DS0) Centrex Loops on Channelized DS1 Service																
D4 Channel Bank Feature Activations																
	Feature Activation on D-4 Channel Bank Centrex Loop Slot			UEP91	1PQWS	0.4689										
	Feature Activation on D-4 Channel Bank FX line Side Loop Slot			UEP91	1PQW6	0.4689										
	Feature Activation on D-4 Channel Bank FX Trunk Side Loop Slot			UEP91	1PQW7	0.4689										
	Feature Activation on D-4 Channel Bank Centrex Loop Slot - Different Wire Center			UEP91	1PQWP	0.4689										
	Feature Activation on D-4 Channel Bank Private Line Loop Slot			UEP91	1PQWV	0.4689										
	Feature Activation on D-4 Channel Bank Tjie Line/Trunk Loop Slot			UEP91	1PQWQ	0.4689										
	Feature Activation on D-4 Channel Bank WATS Loop Slot			UEP91	1PQWA	0.4689										
Non-Recurring Charges (NRC) Associated with UNE-P Centrex																
	Conversion - Currently Combined Switch-As-Is with allowed changes, per port			UEP91	USAC2		0.10	0.10								
	New Centrex Standard Common Block			UEP91	M1ACS	0.00	317.90	37.59	48.99	5.92						
	New Centrex Customized Common Block			UEP91	M1ACC	0.00	317.90	37.59	48.99	5.92						
	Secondary Block, per Block			UEP91	M2CC1	0.00	77.10									
	NAR Establishment Charge, Per Occasion			UEP91	URECA	0.00	0.00									
Additional Non-Recurring Charges (NRC)																
	Unbundled Miscellaneous Rate Element, Tag Loop at End Use Premise			UEP91	URETL		8.33	0.83								
	Unbundled Miscellaneous Rate Element, Tag Design Loop at End Use Premise			UEP91	URETN		11.19	1.10								
UNE-P CENTREX - 5ESS (Valid in All States)																
2-Wire VG Loop/2-Wire Voice Grade Port (Centrex) Combo																
UNE Port/Loop Combination Rates (Non-Design)																
	2-Wire VG Loop/2-Wire Voice Grade Port (Centrex) Port Combo - Non-Design					11.46										
	2-Wire VG Loop/2-Wire Voice Grade Port (Centrex)Port Combo - Non-Design					16.76										
	2-Wire VG Loop/2-Wire Voice Grade Port (Centrex)Port Combo - Non-Design					33.56										
UNE Port/Loop Combination Rates (Design)																
	2-Wire VG Loop/2-Wire Voice Grade Port (Centrex) Port Combo - Design					13.47										
	2-Wire VG Loop/2-Wire Voice Grade Port (Centrex)Port Combo - Design					18.85										
	2-Wire VG Loop/2-Wire Voice Grade Port (Centrex)Port Combo - Design					34.98										
UNE Loop Rate																
	2-Wire Voice Grade Loop (SL 1) - Zone 1		1	UEP95	UECS1	9.56										
	2-Wire Voice Grade Loop (SL 1) - Zone 2		2	UEP95	UECS1	14.86										
	2-Wire Voice Grade Loop (SL 1) - Zone 3		3	UEP95	UECS1	31.66										
	2-Wire Voice Grade Loop (SL 2) - Zone 1		1	UEP95	UECS2	11.57										
	2-Wire Voice Grade Loop (SL 2) - Zone 2		2	UEP95	UECS2	16.95										
	2-Wire Voice Grade Loop (SL 2) - Zone 3		3	UEP95	UECS2	33.08										
UNE Port Rate																
All States																
	2-Wire Voice Grade Port (Centrex) Basic Local Area			UEP95	UEPYA	1.9019	10.05	7.36	1.37	1.28						
	2-Wire Voice Grade Port (Centrex 800 termination)			UEP95	UEPYB	1.9019	10.05	7.36	1.37	1.28						
	2-Wire Voice Grade Port (Centrex with Caller ID)1Basic Local Area			UEP95	UEPYH	1.9019	10.05	7.36	1.37	1.28						
	2-Wire Voice Grade Port (Centrex from diff Serving Wire Center)2,3 Basic Local Area			UEP95	UEPYM	1.9019	82.27	26.96	20.29	9.15						

UNBUNDLED NETWORK ELEMENTS - Georgia

Attachment: 2 Ex. A

CATEGORY	RATE ELEMENTS	Interim	Zone	BCS	USOC	RATES ($)					Svc Order Submitted Elec per LSR	Svc Order Submitted Manually per LSR	Incremental Charge - Manual Svc Order vs. Electronic-1st	Incremental Charge - Manual Svc Order vs. Electronic-Add'l	Incremental Charge - Manual Svc Order vs. Electronic-Disc 1st	Incremental Charge - Manual Svc Order vs. Electronic-Disc Add'l
						Rec	Nonrecurring		Nonrecurring Disconnect		OSS Rates ($)					
							First	Add'l	First	Add'l	SOMEC	SOMAN	SOMAN	SOMAN	SOMAN	SOMAN
	2-Wire Voice Grade Port, Diff Serving Wire Center 2,3 - 800 Service Term - Basic Local Area			UEP95	UEPYZ	1.9019	82.27	26.96	20.29	9.15						
	2-Wire Voice Grade Port terminated in on Megalink or equivalent - Basic Local Area			UEP95	UEPY9	1.9019	10.05	7.36	1.37	1.28						
	2-Wire Voice Grade Port Terminated on 800 Service Term - Basic Local Area			UEP95	UEPY2	1.9019	10.05	7.36	1.37	1.28						
FL & GA Only																
	2-Wire Voice Grade Port (Centrex)			UEP95	UEPHA	1.9019	10.05	7.36	1.37	1.28						
	2-Wire Voice Grade Port (Centrex 800 termination)			UEP95	UEPHB	1.9019	10.05	7.36	1.37	1.28						
	2-Wire Voice Grade Port (Centrex with Caller ID)1			UEP95	UEPHH	1.9019	10.05	7.36	1.37	1.28						
	2-Wire Voice Grade Port (Centrex from diff Serving Wire Center)2,3			UEP95	UEPHM	1.9019	82.27	26.96	20.29	9.15						
	2-Wire Voice Grade Port, Diff Serving Wire Center - 800 Service Term 2,3			UEP95	UEPHZ	1.9019	82.27	26.96	20.29	9.15						
	2-Wire Voice Grade Port terminated in on Megalink or equivalent			UEP95	UEPH9	1.9019	10.05	7.36	1.37	1.28						
	2-Wire Voice Grade Port Terminated on 800 Service Term			UEP95	UEPH2	1.9019	10.05	7.36	1.37	1.28						
Local Switching																
	Centrex Intercom Funtionality, per port			UEP95	URECS	0.4237										
Features																
	All Standard Features Offered, per port			UEP95	UEPVF	0.775										
	All Select Features Offered, per port			UEP95	UEPVS	0.00	0.00									
	All Centrex Control Features Offered, per port			UEP95	UEPVC	0.00										
NARS																
	Unbundled Network Access Register - Combination			UEP95	UARCX	0.00	0.00	0.00	0.00	0.00						
	Unbundled Network Access Register - Indial			UEP95	UAR1X	0.00	0.00	0.00	0.00	0.00						
	Unbundled Network Access Register - Outdial			UEP95	UAROX	0.00	0.00	0.00	0.00	0.00						
Miscellaneous Terminations																
2-Wire Trunk Side																
	Trunk Side Terminations, each			UEP95	CEND6	5.50	122.26	18.65	54.82	3.45						
4-Wire Digital (1.544 Megabits)																
	DS1 Circuit Terminations, each			UEP95	M1HD1	41.20	200.96	93.00	65.81	2.33						
	DS0 Channels Activated, each			UEP95	M1HDO	0.00	13.95									
Interoffice Channel Mileage - 2-Wire																
	Interoffice Channel Facilities Termination			UEP95	M1GBC	12.87	48.46	19.48	16.58	5.00						
	Interoffice Channel mileage, per mile or fraction of mile			UEP95	M1GBM	0.0057										
Feature Activations (DS0) Centrex Loops on Channelized DS1 Service																
D4 Channel Bank Feature Activations																
	Feature Activation on D-4 Channel Bank Centrex Loop Slot			UEP95	1PQWS	0.4689										
	Feature Activation on D-4 Channel Bank FX line Side Loop Slot			UEP95	1PQW6	0.4689										
	Feature Activation on D-4 Channel Bank FX Trunk Side Loop Slot			UEP95	1PQW7	0.4689										
	Feature Activation on D-4 Channel Bank Centrex Loop Slot - Different Wire Center			UEP95	1PQWP	0.4689										
	Feature Activation on D-4 Channel Bank Private Line Loop Slot			UEP95	1PQWV	0.4689										
	Feature Activation on D-4 Channel Bank Tjie Line/Trunk Loop Slot			UEP95	1PQWQ	0.4689										
	Feature Activation on D-4 Channel Bank WATS Loop Slot			UEP95	1PQWA	0.4689										
Non-Recurring Charges (NRC) Associated with UNE-P Centrex																
	NRC Conversion Currently Combined Switch-As-Is with allowed changes, per port			UEP95	USAC2		0.10	0.10								
	New Centrex Standard Common Block			UEP95	M1ACS	0.00	317.90	37.59	48.99	5.92						
	New Centrex Customized Common Block			UEP95	M1ACC	0.00	317.90	37.59	48.99	5.92						
	NAR Establishment Charge, Per Occasion			UEP95	URECA	0.00	0.00									
Additional Non-Recurring Charges (NRC)																
	Unbundled Miscellaneous Rate Element, Tag Loop at End Use Premise			UEP95	URETL		8.33	0.83								
	Unbundled Miscellaneous Rate Element, Tag Design Loop at End Use Premise			UEP95	URETN		11.19	1.10								
UNE-P CENTREX - DMS100 (Valid in All States)																
2-Wire VG Loop/2-Wire Voice Grade Port (Centrex) Combo																
UNE Port/Loop Combination Rates (Non-Design)																

CATEGORY	RATE ELEMENTS	Interim	Zone	BCS	USOC	RATES ($)					Svc Order Submitted Elec per LSR	Svc Order Submitted Manually per LSR	Incremental Charge - Manual Svc Order vs. Electronic-1st	Incremental Charge - Manual Svc Order vs. Electronic-Add'l	Incremental Charge - Manual Svc Order vs. Electronic-Disc 1st	Incremental Charge - Manual Svc Order vs. Electronic-Disc Add'l
						Rec	Nonrecurring		Nonrecurring Disconnect		OSS Rates ($)					
							First	Add'l	First	Add'l	SOMEC	SOMAN	SOMAN	SOMAN	SOMAN	SOMAN
	2-Wire VG Loop/2-Wire Voice Grade Port (Centrex) Port Combo - Non-Design					11.46										
	2-Wire VG Loop/2-Wire Voice Grade Port (Centrex)Port Combo - Non-Design					16.76										
	2-Wire VG Loop/2-Wire Voice Grade Port (Centrex)Port Combo - Non-Design					33.56										
UNE Port/Loop Combination Rates (Design)																
	2-Wire VG Loop/2-Wire Voice Grade Port (Centrex) Port Combo - Design					13.47										
	2-Wire VG Loop/2-Wire Voice Grade Port (Centrex)Port Combo - Design					18.85										
	2-Wire VG Loop/2-Wire Voice Grade Port (Centrex)Port Combo - Design					34.98										
UNE Loop Rate																
	2-Wire Voice Grade Loop (SL 1) - Zone 1		1	UEP9D	UECS1	9.56										
	2-Wire Voice Grade Loop (SL 1) - Zone 2		2	UEP9D	UECS1	14.86										
	2-Wire Voice Grade Loop (SL 1) - Zone 3		3	UEP9D	UECS1	31.66										
	2-Wire Voice Grade Loop (SL 2) - Zone 1		1	UEP9D	UECS2	11.57										
	2-Wire Voice Grade Loop (SL 2) - Zone 2		2	UEP9D	UECS2	16.95										
	2-Wire Voice Grade Loop (SL 2) - Zone 3		3	UEP9D	UECS2	33.08										
UNE Port Rate																
ALL STATES																
	2-Wire Voice Grade Port (Centrex) Basic Local Area			UEP9D	UEPYA	1.9019	10.05	7.36	1.37	1.28						
	2-Wire Voice Grade Port (Centrex 800 termination)Basic Local Area			UEP9D	UEPYB	1.9019	10.05	7.36	1.37	1.28						
	2-Wire Voice Grade Port (Centrex / EBS-PSET)3Basic Local Area			UEP9D	UEPYC	1.9019	10.05	7.36	1.37	1.28						
	2-Wire Voice Grade Port (Centrex / EBS-M5009)3Basic Local Area			UEP9D	UEPYD	1.9019	10.05	7.36	1.37	1.28						
	2-Wire Voice Grade Port (Centrex / EBS-M5209))3 Basic Local Area			UEP9D	UEPYE	1.9019	10.05	7.36	1.37	1.28						
	2-Wire Voice Grade Port (Centrex / EBS-M5112))3 Basic Local Area			UEP9D	UEPYF	1.9019	10.05	7.36	1.37	1.28						
	2-Wire Voice Grade Port (Centrex / EBS-M5312))3Basic Local Area			UEP9D	UEPYG	1.9019	10.05	7.36	1.37	1.28						
	2-Wire Voice Grade Port (Centrex / EBS-M5008))3 Basic Local Area			UEP9D	UEPYT	1.9019	10.05	7.36	1.37	1.28						
	2-Wire Voice Grade Port (Centrex / EBS-M5208))3 Basic Local Area			UEP9D	UEPYU	1.9019	10.05	7.36	1.37	1.28						
	2-Wire Voice Grade Port (Centrex / EBS-M5216))3 Basic Local Area			UEP9D	UEPYV	1.9019	10.05	7.36	1.37	1.28						
	2-Wire Voice Grade Port (Centrex / EBS-M5316))3 Basic Local Area			UEP9D	UEPY3	1.9019	10.05	7.36	1.37	1.28						
	2-Wire Voice Grade Port (Centrex with Caller ID) Basic Local Area			UEP9D	UEPYH	1.9019	10.05	7.36	1.37	1.28						
	2-Wire Voice Grade Port (Centrex/Caller ID/Msg Wtg Lamp Indication))4 Basic Local Area			UEP9D	UEPYW	1.9019	10.05	7.36	1.37	1.28						
	2-Wire Voice Grade Port (Centrex/Msg Wtg Lamp Indication))4 Basic Local Area			UEP9D	UEPYJ	1.9019	10.05	7.36	1.37	1.28						
	2-Wire Voice Grade Port (Centrex from diff Serving Wire Center) 2,3-Basic Local Area			UEP9D	UEPYM	1.9019	82.27	26.96	20.29	9.15						
	2-Wire Voice Grade Port (Centrex/differ SWC /EBS-PSET)2,3,4 Basic Local Area			UEP9D	UEPYO	1.9019	82.27	26.96	20.29	9.15						
	2-Wire Voice Grade Port (Centrex/differ SWC /EBS-M5009)2,3,4 Basic Local Area			UEP9D	UEPYP	1.9019	82.27	26.96	20.29	9.15						
	2-Wire Voice Grade Port (Centrex/differ SWC /EBS-5209)2,3,4 Basic Local Area			UEP9D	UEPYQ	1.9019	82.27	26.96	20.29	9.15						
	2-Wire Voice Grade Port (Centrex/differ SWC /EBS-M5112)2,3,4 Basic Local Area			UEP9D	UEPYR	1.9019	82.27	26.96	20.29	9.15						
	2-Wire Voice Grade Port (Centrex/differ SWC /EBS-M5312)2,3,4 Basic Local Area			UEP9D	UEPYS	1.9019	82.27	26.96	20.29	9.15						
	2-Wire Voice Grade Port (Centrex/differ SWC /EBS-M5008)2,3,4 Basic Local Area			UEP9D	UEPY4	1.9019	82.27	26.96	20.29	9.15						

CATEGORY	RATE ELEMENTS	Interim	Zone	BCS	USOC	RATES ($)					Svc Order Submitted Elec per LSR	Svc Order Submitted Manually per LSR	Incremental Charge - Manual Svc Order vs. Electronic-1st	Incremental Charge - Manual Svc Order vs. Electronic-Add'l	Incremental Charge - Manual Svc Order vs. Electronic-Disc 1st	Incremental Charge - Manual Svc Order vs. Electronic-Disc Add'l
						Rec	Nonrecurring		Nonrecurring Disconnect		OSS Rates ($)					
							First	Add'l	First	Add'l	SOMEC	SOMAN	SOMAN	SOMAN	SOMAN	SOMAN
	2-Wire Voice Grade Port (Centrex/differ SWC /EBS-M5208)2, 3 Basic Local Area			UEP9D	UEPY5	1.9019	82.27	26.96	20.29	9.15						
	2-Wire Voice Grade Port (Centrex/differ SWC /EBS-M5216)2,3,4 Basic Local Area			UEP9D	UEPY6	1.9019	82.27	26.96	20.29	9.15						
	2-Wire Voice Grade Port (Centrex/differ SWC /EBS-M5316)2,3,4 Basic Local Area			UEP9D	UEPY7	1.9019	82.27	26.96	20.29	9.15						
	2-Wire Voice Grade Port, Diff Serving Wire Center - 800 Service Term 2,3			UEP9D	UEPYZ	1.9019	82.27	26.96	20.29	9.15						
	2-Wire Voice Grade Port terminated in on Megalink or equivalent Basic Local Area			UEP9D	UEPY9	1.9019	10.05	7.36	1.37	1.28						
	2-Wire Voice Grade Port Terminated on 800 Service Term Basic Local Area			UEP9D	UEPY2	1.9019	10.05	7.36	1.37	1.28						
FL & GA Only																
	2-Wire Voice Grade Port (Centrex)			UEP9D	UEPHA	1.9019	10.05	7.36	1.37	1.28						
	2-Wire Voice Grade Port (Centrex 800 termination)			UEP9D	UEPHB	1.9019	10.05	7.36	1.37	1.28						
	2-Wire Voice Grade Port (Centrex / EBS-PSET)4			UEP9D	UEPHC	1.9019	10.05	7.36	1.37	1.28						
	2-Wire Voice Grade Port (Centrex / EBS-M5009)4			UEP9D	UEPHD	1.9019	10.05	7.36	1.37	1.28						
	2-Wire Voice Grade Port (Centrex / EBS-M5209)4			UEP9D	UEPHE	1.9019	10.05	7.36	1.37	1.28						
	2-Wire Voice Grade Port (Centrex / EBS-M5112)4			UEP9D	UEPHF	1.9019	10.05	7.36	1.37	1.28						
	2-Wire Voice Grade Port (Centrex / EBS-M5312)4			UEP9D	UEPHG	1.9019	10.05	7.36	1.37	1.28						
	2-Wire Voice Grade Port (Centrex / EBS-M5008)4			UEP9D	UEPHT	1.9019	10.05	7.36	1.37	1.28						
	2-Wire Voice Grade Port (Centrex / EBS-M5208)4			UEP9D	UEPHU	1.9019	10.05	7.36	1.37	1.28						
	2-Wire Voice Grade Port (Centrex / EBS-M5216)4			UEP9D	UEPHV	1.9019	10.05	7.36	1.37	1.28						
	2-Wire Voice Grade Port (Centrex / EBS-M5316)4			UEP9D	UEPH3	1.9019	10.05	7.36	1.37	1.28						
	2-Wire Voice Grade Port (Centrex with Caller ID)			UEP9D	UEPHH	1.9019	10.05	7.36	1.37	1.28						
	2-Wire Voice Grade Port (Centrex/Caller ID/Msg Wtg Lamp Indication)4			UEP9D	UEPHW	1.9019	10.05	7.36	1.37	1.28						
	2-Wire Voice Grade Port (Centrex/Msg Wtg Lamp Indication)4			UEP9D	UEPHJ	1.9019	10.05	7.36	1.37	1.28						
	2-Wire Voice Grade Port (Centrex from diff Serving Wire Center) 2,3			UEP9D	UEPHM	1.9019	82.27	26.96	20.29	9.15						
	2-Wire Voice Grade Port (Centrex/differ SWC /EBS-PSET)2,3,4			UEP9D	UEPHO	1.9019	82.27	26.96	20.29	9.15						
	2-Wire Voice Grade Port (Centrex/differ SWC /EBS-M5009)2,3,4			UEP9D	UEPHP	1.9019	82.27	26.96	20.29	9.15						
	2-Wire Voice Grade Port (Centrex/differ SWC /EBS-5209)2,3,4			UEP9D	UEPHQ	1.9019	82.27	26.96	20.29	9.15						
	2-Wire Voice Grade Port (Centrex/differ SWC /EBS-M5112)2,3,4			UEP9D	UEPHR	1.9019	82.27	26.96	20.29	9.15						
	2-Wire Voice Grade Port (Centrex/differ SWC /EBS-M5312)2, 3,4			UEP9D	UEPHS	1.9019	82.27	26.96	20.29	9.15						
	2-Wire Voice Grade Port (Centrex/differ SWC /EBS-M5008)2,3,4			UEP9D	UEPH4	1.9019	82.27	26.96	20.29	9.15						
	2-Wire Voice Grade Port (Centrex/differ SWC /EBS-M5208)2,3,4			UEP9D	UEPH5	1.9019	82.27	26.96	20.29	9.15						
	2-Wire Voice Grade Port (Centrex/differ SWC /EBS-M5216)2,3,4			UEP9D	UEPH6	1.9019	82.27	26.96	20.29	9.15						
	2-Wire Voice Grade Port (Centrex/differ SWC /EBS-M5316)2,3,4			UEP9D	UEPH7	1.9019	82.27	26.96	20.29	9.15						
	2-Wire Voice Grade Port, Diff Serving Wire Center - 800 Service Term 2,3			UEP9D	UEPHZ	1.9019	82.27	26.96	20.29	9.15						
	2-Wire Voice Grade Port terminated in on Megalink or equivalent			UEP9D	UEPH9	1.9019	10.05	7.36	1.37	1.28						
	2-Wire Voice Grade Port Terminated on 800 Service Term			UEP9D	UEPH2	1.9019	10.05	7.36	1.37	1.28						
Local Switching																
	Centrex Intercom Funtionality, per port			UEP9D	URECS	0.4237										
	All Select Features Offered, per port			UEP9D	UEPVS	0.00	0.00									
	All Centrex Control Features Offered, per port			UEP9D	UEPVC	0.00										
NARS																
	Unbundled Network Access Register - Combination			UEP9D	UARCX	0.00	0.00	0.00	0.00	0.00						
	Unbundled Network Access Register - Inward			UEP9D	UAR1X	0.00	0.00	0.00	0.00	0.00						
	Unbundled Network Access Register - Outdial			UEP9D	UAROX	0.00	0.00	0.00	0.00	0.00						
Miscellaneous Terminations																
2-Wire Trunk Side																
	Trunk Side Terminations, each			UEP9D	CEND6	5.50	122.26	18.65	54.82	3.45						

UNBUNDLED NETWORK ELEMENTS - Georgia

Attachment: 2 Ex. A

CATEGORY	RATE ELEMENTS	Interim	Zone	BCS	USOC	RATES ($)					Svc Order Submitted Elec per LSR	Svc Order Submitted Manually per LSR	Incremental Charge - Manual Svc Order vs. Electronic-1st	Incremental Charge - Manual Svc Order vs. Electronic-Add'l	Incremental Charge - Manual Svc Order vs. Electronic-Disc 1st	Incremental Charge - Manual Svc Order vs. Electronic-Disc Add'l
						Rec	Nonrecurring		Nonrecurring Disconnect		OSS Rates ($)					
							First	Add'l	First	Add'l	SOMEC	SOMAN	SOMAN	SOMAN	SOMAN	SOMAN
4-Wire Digital (1.544 Megabits)																
	DS1 Circuit Terminations, each			UEP9D	M1HD1	41.20	200.96	93.00	65.81	2.33						
	DS0 Channels Activiated per Channel			UEP9D	M1HDO	0.00	13.95									
Interoffice Channel Mileage - 2-Wire																
	Interoffice Channel Facilities Termination			UEP9D	M1GBC	12.87	48.46	19.48	16.58	5.00						
	Interoffice Channel mileage, per mile or fraction of mile			UEP9D	M1GBM	0.0057										
Feature Activations (DS0) Centrex Loops on Channelized DS1 Service																
D4 Channel Bank Feature Activations																
	Feature Activation on D-4 Channel Bank Centrex Loop Slot			UEP9D	1PQWS	0.4689										
	Feature Activation on D-4 Channel Bank FX line Side Loop Slot			UEP9D	1PQW6	0.4689										
	Feature Activation on D-4 Channel Bank FX Trunk Side Loop Slot			UEP9D	1PQW7	0.4689										
	Feature Activation on D-4 Channel Bank Centrex Loop Slot - Different Wire Center			UEP9D	1PQWP	0.4689										
	Feature Activation on D-4 Channel Bank Private Line Loop Slot			UEP9D	1PQWV	0.4689										
	Feature Activation on D-4 Channel Bank Tjie Line/Trunk Loop Slot			UEP9D	1PQWQ	0.4689										
	Feature Activation on D-4 Channel Bank WATS Loop Slot			UEP9D	1PQWA	0.4689										
Non-Recurring Charges (NRC) Associated with UNE-P Centrex																
	NRC Conversion Currently Combined Switch-As-Is with allowed changes, per port			UEP9D	USAC2		0.10	0.10								
	New Centrex Standard Common Block			UEP9D	M1ACS	0.00	317.90	37.59	48.99	5.92						
	New Centrex Customized Common Block			UEP9D	M1ACC	0.00	317.90	37.59	48.99	5.92						
	NAR Establishment Charge, Per Occasion			UEP9D	URECA	0.00	0.00									
Additional Non-Recurring Charges (NRC)																
	Unbundled Miscellaneous Rate Element, Tag Loop at End Use Premise			UEP9D	URETL		8.33	0.83								
	Unbundled Miscellaneous Rate Element, Tag Design Loop at End Use Premise			UEP9D	URETN		11.19	1.10								
Additional Non-Recurring Charges (NRC)																
	Unbundled Miscellaneous Rate Element, Tag Loop at End Use Premise			UEP9E	URETL											
	Unbundled Miscellaneous Rate Element, Tag Design Loop at End Use Premise			UEP9E	URETN											
Note 1 - Required Port for Centrex Control in 1AESS, 5ESS & EWSD																
Note 2 - Requres Interoffice Channel Mileage																
Note 3 - Installation is combination of Installation charge for SL2 Loop and Port																
Note 4 - Requires Specific Customer Premises Equipment																
Note: Rates displaying an "I" in Interim column are interim as a result of a Commission order.																

UNBUNDLED NETWORK ELEMENTS - Kentucky

Attachment: 2 Ex. A

CATEGORY	RATE ELEMENTS	Interim	Zone	BCS	USOC	RATES ($)					Svc Order Submitted Elec per LSR	Svc Order Submitted Manually per LSR	Incremental Charge - Manual Svc Order vs. Electronic-1st	Incremental Charge - Manual Svc Order vs. Electronic-Add'l	Incremental Charge - Manual Svc Order vs. Electronic-Disc 1st	Incremental Charge - Manual Svc Order vs. Electronic-Disc Add'l
						Rec	Nonrecurring		Nonrecurring Disconnect		OSS Rates ($)					
							First	Add'l	First	Add'l	SOMEC	SOMAN	SOMAN	SOMAN	SOMAN	SOMAN
	The "Zone" shown in the sections for stand-alone loops or loops as part of a combination refers to Geographically Deaveraged UNE Zones. To view Geographically Deaveraged UNE Zone Designations by Central Office, refer to internet Website: http://www.interconnection.bellsouth.com/become_a_clec/html/interconnection.htm															
OPERATIONAL SUPPORT SYSTEMS (OSS) - "REGIONAL RATES"																
	NOTE: (1) CLEC should contact its contract negotiator if it prefers the "state specific" OSS charges as ordered by the State Commissions. The OSS charges currently contained in this rate exhibit are the BellSouth "regional" service ordering charges. CLEC may elect either the state specific Commission ordered rates for the service ordering charges, or CLEC may elect the regional service ordering charge, however, CLEC can not obtain a mixture of the two regardless if CLEC has a interconnection contract established in each of the 9 states.															
	NOTE: (2) Any element that can be ordered electronically will be billed according to the SOMEC rate listed in this category. Please refer to BellSouth's Local Ordering Handbook (LOH) to determine if a product can be ordered electronically. For those elements that cannot be ordered electronically at present per the LOH, the listed SOMEC rate in this category reflects the charge that would be billed to a CLEC once electronic ordering capabilities come on-line for that element. Otherwise, the manual ordering charge, SOMAN, will be applied to a CLECs bill when it submits an LSR to BellSouth.															
	OSS - Electronic Service Order Charge, Per Local Service Request (LSR) - UNE Only				SOMEC		3.50	0.00	3.50	0.00						
	OSS - Manual Service Order Charge, Per Local Service Request (LSR) - UNE Only				SOMAN		7.86	0.00	0.99	0.00						
UNE SERVICE DATE ADVANCEMENT CHARGE																
	NOTE: The Expedite charge will be maintained commensurate with BellSouth's FCC No.1 Tariff, Section 5 as applicable.															
	UNE Expedite Charge per Circuit or Line Assignable USOC, per Day			UAL, UEANL, UCL, UEF, UDF, UEQ, UDL, UENTW, UDN, UEA, UHL, ULC, USL, U1T12, U1T48, U1TD1, U1TD3, U1TDX, U1TO3, U1TS1, U1TVX, UC1BC, UC1BL, UC1CC, UC1CL, UC1DC, UC1DL, UC1EC, UC1EL, UC1FC, UC1FL, UC1GC, UC1GL, UC1HC, UC1HL, UDL12, UDL48, UDLO3, UDLSX, UE3, ULD12, ULD48, ULDD1, ULDD3, ULDDX, ULDO3, ULDS1, ULDVX, UNC1X, UNC3X, UNCDX, UNCNX, UNCSX, UNCVX, UNLD1, UNLD3, UXTD1, UXTD3, UXTS1, U1TUC, U1TUD, U1TUB, U1TUA	SDASP		200.00									
ORDER MODIFICATION CHARGE																
	Order Modification Charge (OMC)						33.37	0.00	0.00	0.00						
	Order Modification Additional Dispatch Charge (OMCAD)						150.00	0.00	0.00	0.00						
UNBUNDLED EXCHANGE ACCESS LOOP																
	2-WIRE ANALOG VOICE GRADE LOOP															
	2-Wire Analog Voice Grade Loop - Service Level 1- Zone 1		1	UEANL	UEAL2	10.56	46.66	22.57	26.65	7.65						
	2-Wire Analog Voice Grade Loop - Service Level 1- Zone 2		2	UEANL	UEAL2	15.34	46.66	22.57	26.65	7.65						
	2-Wire Analog Voice Grade Loop - Service Level 1- Zone 3		3	UEANL	UEAL2	31.11	46.66	22.57	26.65	7.65						
	2-Wire Analog Voice Grade Loop - Service Level 1- Zone 1		1	UEANL	UEASL	10.56	46.66	22.57	26.65	7.65						
	2-Wire Analog Voice Grade Loop - Service Level 1- Zone 2		2	UEANL	UEASL	15.34	46.66	22.57	26.65	7.65						
	2-Wire Analog Voice Grade Loop - Service Level 1- Zone 3		3	UEANL	UEASL	31.11	46.66	22.57	26.65	7.65						
	Unbundled Miscellaneous Rate Element, Tag Loop at End User Premise			UEANL	URETL		8.33	0.83								
	Loop Testing - Basic 1st Half Hour			UEANL	URET1		46.88	46.88								
	Loop Testing - Basic Additional Half Hour			UEANL	URETA		24.16	24.16								
	CLEC to CLEC Conversion Charge Without Outside Dispatch (UVL-SL1)			UEANL	UREWO		15.78	8.94								

CATEGORY	RATE ELEMENTS	Interim	Zone	BCS	USOC	RATES ($)					Svc Order Submitted Elec per LSR	Svc Order Submitted Manually per LSR	Incremental Charge - Manual Svc Order vs. Electronic-1st	Incremental Charge - Manual Svc Order vs. Electronic-Add'l	Incremental Charge - Manual Svc Order vs. Electronic-Disc 1st	Incremental Charge - Manual Svc Order vs. Electronic-Disc Add'l
						Rec	Nonrecurring		Nonrecurring Disconnect		OSS Rates ($)					
							First	Add'l	First	Add'l	SOMEC	SOMAN	SOMAN	SOMAN	SOMAN	SOMAN
	Unbundled Voice Loop, Non-Design Voice Loop, billing for BST providing make-up (Engineering Information - E.I.)			UEANL	UEANM		13.49	13.49								
	Manual Order Coordination for UVL-SL1s (per loop)			UEANL	UEAMC		9.00	9.00								
	Order Coordination for Specified Conversion Time for UVL-SL1 (per LSR)			UEANL	OCOSL		23.01	23.01								
2-WIRE Unbundled COPPER LOOP																
	2-Wire Unbundled Copper Loop - Non-Designed Zone 1		1	UEQ	UEQ2X	10.58	44.97	20.89	25.64	6.65						
	2 Wire Unbundled Copper Loop - Non-Designed - Zone 2		2	UEQ	UEQ2X	11.51	44.97	20.89	25.64	6.65						
	2 Wire Unbundled Copper Loop - Non-Designed - Zone 3		3	UEQ	UEQ2X	13.19	44.97	20.89	25.64	6.65						
	Unbundled Miscellaneous Rate Element, Tag Loop at End User Premise			UEQ	URETL		8.33	0.83								
	Manual Order Coordination 2 Wire Unbundled Copper Loop - Non-Designed (per loop)			UEQ	USBMC		9.00	9.00								
	Unbundled Copper Loop, Non-Design Copper Loop, billing for BST providing make-up (Engineering Information - E.I.)			UEQ	UEQMU		13.49	13.49								
	Loop Testing - Basic 1st Half Hour			UEQ	URET1		46.88	46.88								
	Loop Testing - Basic Additional Half Hour			UEQ	URETA		24.16	24.16								
	CLEC to CLEC Conversion Charge Without Outside Dispatch (UCL-ND)			UEQ	UREWO		14.27	7.43								
UNBUNDLED EXCHANGE ACCESS LOOP																
2-WIRE ANALOG VOICE GRADE LOOP																
	2 Wire Analog Voice Grade Loop-Service Level 1-Line Splitting-Zone 1		1	UEPSR UEPSB	UEALS	10.56	46.66	22.57	26.65	7.65						
	2 Wire Analog Voice Grade Loop-Service Level 1-Line Splitting-Zone 1		1	UEPSR UEPSB	UEABS	10.56	46.66	22.57	26.65	7.65						
	2 Wire Analog Voice Grade Loop- Service Level 1-Line Splitting-Zone 2		2	UEPSR UEPSB	UEALS	15.34	46.66	22.57	26.65	7.65						
	2 Wire Analog Voice Grade Loop- Service Level 1-Line Splitting-Zone 2		2	UEPSR UEPSB	UEABS	15.34	46.66	22.57	26.65	7.65						
	2 Wire Analog Voice Grade Loop-Service Level 1-Line Splitting-Zone 3		3	UEPSR UEPSB	UEALS	31.11	46.66	22.57	26.65	7.65						
	2 Wire Analog Voice Grade Loop-Service Level 1-Line Splitting-Zone 3		3	UEPSR UEPSB	UEABS	31.11	46.66	22.57	26.65	7.65						
UNBUNDLED EXCHANGE ACCESS LOOP																
2-WIRE ANALOG VOICE GRADE LOOP																
	2-Wire Analog Voice Grade Loop - Service Level 2 w/Loop or Ground Start Signaling - Zone 1		1	UEA	UEAL2	12.67	134.89	81.87	73.65	14.88						
	2-Wire Analog Voice Grade Loop - Service Level 2 w/Loop or Ground Start Signaling - Zone 2		2	UEA	UEAL2	17.45	134.89	81.87	73.65	14.88						
	2-Wire Analog Voice Grade Loop - Service Level 2 w/Loop or Ground Start Signaling - Zone 3		3	UEA	UEAL2	33.22	134.89	81.87	73.65	14.88						
	Order Coordination for Specified Conversion Time (per LSR)			UEA	OCOSL		23.01									
	2-Wire Analog Voice Grade Loop - Service Level 2 w/Reverse Battery Signaling - Zone 1		1	UEA	UEAR2	12.67	134.89	81.87	73.65	14.88						
	2-Wire Analog Voice Grade Loop - Service Level 2 w/Reverse Battery Signaling - Zone 2		2	UEA	UEAR2	17.45	134.89	81.87	73.65	14.88						
	2-Wire Analog Voice Grade Loop - Service Level 2 w/Reverse Battery Signaling - Zone 3		3	UEA	UEAR2	33.22	134.89	81.87	73.65	14.88						
	Order Coordination for Specified Conversion Time (per LSR)			UEA	OCOSL		23.01									
	CLEC to CLEC Conversion Charge without outside dispatch			UEA	UREWO		87.72	36.36								
	Loop Tagging - Service Level 2 (SL2)			UEA	URETL		11.21	1.10								
4-WIRE ANALOG VOICE GRADE LOOP																
	4-Wire Analog Voice Grade Loop - Zone 1		1	UEA	UEAL4	29.26	164.11	112.36	78.91	18.66						
	4-Wire Analog Voice Grade Loop - Zone 2		2	UEA	UEAL4	34.25	164.11	112.36	78.91	18.66						
	4-Wire Analog Voice Grade Loop - Zone 3		3	UEA	UEAL4	85.06	164.11	112.36	78.91	18.66						
	Order Coordination for Specified Conversion Time (per LSR)			UEA	OCOSL		23.01									
	CLEC to CLEC Conversion Charge without outside dispatch			UEA	UREWO		87.72	36.36								
2-WIRE ISDN DIGITAL GRADE LOOP																
	2-Wire ISDN Digital Grade Loop - Zone 1		1	UDN	U1L2X	18.44	146.77	95.02	71.38	13.83						
	2-Wire ISDN Digital Grade Loop - Zone 2		2	UDN	U1L2X	25.08	146.77	95.02	71.38	13.83						
	2-Wire ISDN Digital Grade Loop - Zone 3		3	UDN	U1L2X	42.87	146.77	95.02	71.38	13.83						
	Order Coordination For Specified Conversion Time (per LSR)			UDN	OCOSL		23.01									
	CLEC to CLEC Conversion Charge without outside dispatch			UDN	UREWO		91.63	44.16								
2-WIRE ASYMMETRICAL DIGITAL SUBSCRIBER LINE (ADSL) COMPATIBLE LOOP																

UNBUNDLED NETWORK ELEMENTS - Kentucky

Attachment: 2 Ex. A

CATEGORY	RATE ELEMENTS	Interim	Zone	BCS	USOC	RATES ($)					Svc Order Submitted Elec per LSR	Svc Order Submitted Manually per LSR	Incremental Charge - Manual Svc Order vs. Electronic-1st	Incremental Charge - Manual Svc Order vs. Electronic-Add'l	Incremental Charge - Manual Svc Order vs. Electronic-Disc 1st	Incremental Charge - Manual Svc Order vs. Electronic-Disc Add'l
						Rec	Nonrecurring		Nonrecurring Disconnect		OSS Rates ($)					
							First	Add'l	First	Add'l	SOMEC	SOMAN	SOMAN	SOMAN	SOMAN	SOMAN
	2 Wire Unbundled ADSL Loop including manual service inquiry & facility reservation - Zone 1		1	UAL	UAL2X	10.82	141.98	79.73	69.02	11.47						
	2 Wire Unbundled ADSL Loop including manual service inquiry & facility reservation - Zone 2		2	UAL	UAL2X	11.79	141.98	79.73	69.02	11.47						
	2 Wire Unbundled ADSL Loop including manual service inquiry & facility reservation - Zone 3		3	UAL	UAL2X	12.87	141.98	79.73	69.02	11.47						
	Order Coordination for Specified Conversion Time (per LSR)			UAL	OCOSL		23.01									
	2 Wire Unbundled ADSL Loop without manual service inquiry & facility reservaton - Zone 1		1	UAL	UAL2W	10.82	121.18	69.00	69.09	11.54						
	2 Wire Unbundled ADSL Loop without manual service inquiry & facility reservaton - Zone 2		2	UAL	UAL2W	11.79	121.18	69.00	69.09	11.54						
	2 Wire Unbundled ADSL Loop without manual service inquiry & facility reservaton - Zone 3		3	UAL	UAL2W	12.87	121.18	69.00	69.09	11.54						
	Order Coordination for Specified Conversion Time (per LSR)			UAL	OCOSL		23.01									
	CLEC to CLEC Conversion Charge without outside dispatch			UAL	UREWO		86.20	40.40								
2-WIRE HIGH BIT RATE DIGITAL SUBSCRIBER LINE (HDSL) COMPATIBLE LOOP																
	2 Wire Unbundled HDSL Loop including manual service inquiry & facility reservation - Zone 1		1	UHL	UHL2X	8.75	151.54	89.29	69.09	11.54						
	2 Wire Unbundled HDSL Loop including manual service inquiry & facility reservation - Zone 2		2	UHL	UHL2X	9.56	151.54	89.29	69.09	11.54						
	2 Wire Unbundled HDSL Loop including manual service inquiry & facility reservation - Zone 3		3	UHL	UHL2X	10.61	151.54	89.29	69.09	11.54						
	Order Coordination for Specified Conversion Time (per LSR)			UHL	OCOSL		23.01									
	2 Wire Unbundled HDSL Loop without manual service inquiry and facility reservation - Zone 1		1	UHL	UHL2W	8.75	130.74	78.56	69.09	11.54						
	2 Wire Unbundled HDSL Loop without manual service inquiry and facility reservation - Zone 2		2	UHL	UHL2W	9.56	130.74	78.56	69.09	11.54						
	2 Wire Unbundled HDSL Loop without manual service inquiry and facility reservation - Zone 3		3	UHL	UHL2W	10.61	130.74	78.56	69.09	11.54						
	Order Coordination for Specified Conversion Time (per LSR)			UHL	OCOSL		23.01									
	CLEC to CLEC Conversion Charge without outside dispatch			UHL	UREWO		86.14	40.40								
4-WIRE HIGH BIT RATE DIGITAL SUBSCRIBER LINE (HDSL) COMPATIBLE LOOP																
	4 Wire Unbundled HDSL Loop including manual service inquiry and facility reservation - Zone 1		1	UHL	UHL4X	13.95	185.75	123.50	74.95	14.69						
	4-Wire Unbundled HDSL Loop including manual service inquiry and facility reservation - Zone 2	I	2	UHL	UHL4X	15.68	185.75	123.50	74.95	14.69						
	4-Wire Unbundled HDSL Loop including manual service inquiry and facility reservation - Zone 3		3	UHL	UHL4X	16.98	185.75	123.50	74.95	14.69						
	Order Coordination for Specified Conversion Time (per LSR)			UHL	OCOSL		23.01									
	4-Wire Unbundled HDSL Loop without manual service inquiry and facility reservation - Zone 1		1	UHL	UHL4W	13.95	164.95	114.04	77.32	15.80						
	4-Wire Unbundled HDSL Loop without manual service inquiry and facility reservation - Zone 2		2	UHL	UHL4W	15.68	164.95	114.04	77.32	15.80						
	4-Wire Unbundled HDSL Loop without manual service inquiry and facility reservation - Zone 3		3	UHL	UHL4W	16.98	164.95	114.04	77.32	15.80						
	Order Coordination for Specified Conversion Time (per LSR)			UHL	OCOSL		23.01									
	CLEC to CLEC Conversion Charge without outside dispatch			UHL	UREWO		86.14	40.40								
4-WIRE DS1 DIGITAL LOOP																
	4-Wire DS1 Digital Loop - Zone 1		1	USL	USLXX	86.47	306.69	174.44	65.83	14.55						
	4-Wire DS1 Digital Loop - Zone 2		2	USL	USLXX	114.10	306.69	174.44	65.83	14.55						
	4-Wire DS1 Digital Loop - Zone 3		3	USL	USLXX	297.76	306.69	174.44	65.83	14.55						
	Order Coordination for Specified Conversion Time (per LSR)			USL	OCOSL		23.01									
	CLEC to CLEC Conversion Charge without outside dispatch			USL	UREWO		101.09	43.04								
4-WIRE 19.2, 56 OR 64 KBPS DIGITAL GRADE LOOP																
	4 Wire Unbundled Digital 19.2 Kbps		1	UDL	UDL19	27.59	157.81	106.06	78.91	18.66						
	4 Wire Unbundled Digital 19.2 Kbps		2	UDL	UDL19	32.48	157.81	106.06	78.91	18.66						
	4 Wire Unbundled Digital 19.2 Kbps		3	UDL	UDL19	36.37	157.81	106.06	78.91	18.66						
	4 Wire Unbundled Digital Loop 56 Kbps - Zone 1		1	UDL	UDL56	27.59	157.81	106.06	78.91	18.66						
	4 Wire Unbundled Digital Loop 56 Kbps - Zone 2		2	UDL	UDL56	32.48	157.81	106.06	78.91	18.66						
	4 Wire Unbundled Digital Loop 56 Kbps - Zone 3		3	UDL	UDL56	36.37	157.81	106.06	78.91	18.66						
	Order Coordination for Specified Conversion Time (per LSR)			UDL	OCOSL		23.01									
	4 Wire Unbundled Digital Loop 64 Kbps - Zone 1		1	UDL	UDL64	27.59	157.81	106.06	78.91	18.66						
	4 Wire Unbundled Digital Loop 64 Kbps - Zone 2		2	UDL	UDL64	32.48	157.81	106.06	78.91	18.66						
	4 Wire Unbundled Digital Loop 64 Kbps - Zone 3		3	UDL	UDL64	36.37	157.81	106.06	78.91	18.66						

UNBUNDLED NETWORK ELEMENTS - Kentucky

Attachment: 2 Ex. A

CATEGORY	RATE ELEMENTS	Interim	Zone	BCS	USOC	RATES ($)					Svc Order Submitted Elec per LSR	Svc Order Submitted Manually per LSR	Incremental Charge - Manual Svc Order vs. Electronic-1st	Incremental Charge - Manual Svc Order vs. Electronic-Add'l	Incremental Charge - Manual Svc Order vs. Electronic-Disc 1st	Incremental Charge - Manual Svc Order vs. Electronic-Disc Add'l
						Rec	Nonrecurring		Nonrecurring Disconnect		OSS Rates ($)					
							First	Add'l	First	Add'l	SOMEC	SOMAN	SOMAN	SOMAN	SOMAN	SOMAN
	Order Coordination for Specified Conversion Time (per LSR)			UDL	OCOSL		23.01									
	CLEC to CLEC Conversion Charge without outside dispatch			UDL	UREWO		102.13	49.75								
2-WIRE Unbundled COPPER LOOP																
	2-Wire Unbundled Copper Loop-Designed including manual service inquiry & facility reservation - Zone 1		1	UCL	UCLPB	10.82	140.95	78.70	69.09	11.54						
	2-Wire Unbundled Copper Loop-Designed including manual service inquiry & facility reservation - Zone 2		2	UCL	UCLPB	11.79	140.95	78.70	69.09	11.54						
	2 Wire Unbundled Copper Loop-Designed including manual service inquiry & facility reservation - Zone 3		3	UCL	UCLPB	12.87	140.95	78.70	69.09	11.54						
	Order Coordination for Unbundled Copper Loops (per loop)			UCL	UCLMC		9.00	9.00								
	2-Wire Unbundled Copper Loop-Designed without manual service inquiry and facility reservation - Zone 1		1	UCL	UCLPW	10.82	120.15	67.97	69.09	11.54						
	2-Wire Unbundled Copper Loop-Designed without manual service inquiry and facility reservation - Zone 2		2	UCL	UCLPW	11.79	120.15	67.97	69.09	11.54						
	2-Wire Unbundled Copper Loop-Designed without manual service inquiry and facility reservation - Zone 3		3	UCL	UCLPW	12.87	120.15	67.97	69.09	11.54						
	Order Coordination for Unbundled Copper Loops (per loop)			UCL	UCLMC		9.00	9.00								
	CLEC to CLEC Conversion Charge without outside dispatch (UCL-Des)			UCL	UREWO		97.23	42.48								
4-WIRE COPPER LOOP																
	4-Wire Copper Loop-Designed including manual service inquiry and facility reservation - Zone 1		1	UCL	UCL4S	16.92	170.31	108.06	74.95	14.69						
	4-Wire Copper Loop-Designed including manual service inquiry and facility reservation - Zone 2		2	UCL	UCL4S	17.36	170.31	108.06	74.95	14.69						
	4-Wire Copper Loop-Designed including manual service inquiry and facility reservation - Zone 3		3	UCL	UCL4S	28.10	170.31	108.06	74.95	14.69						
	Order Coordination for Unbundled Copper Loops (per loop)			UCL	UCLMC		9.00	9.00								
	4-Wire Copper Loop-Designed without manual service inquiry and facility reservation - Zone 1		1	UCL	UCL4W	16.92	149.52	97.33	74.95	14.69						
	4-Wire Copper Loop-Designed without manual service inquiry and facility reservation - Zone 2		2	UCL	UCL4W	17.36	149.52	97.33	74.95	14.69						
	4-Wire Copper Loop-Designed without manual service inquiry and facility reservation - Zone 3		3	UCL	UCL4W	28.10	149.52	97.33	74.95	14.69						
	Order Coordination for Unbundled Copper Loops (per loop)			UCL	UCLMC		9.00	9.00								
	CLEC to CLEC Conversion Charge without outside dispatch (UCL Des)			UCL	UREWO		97.23	42.48								
LOOP MODIFICATION																
	Unbundled Loop Modification, Removal of Load Coils - 2 Wire pair less than or equal to 18k ft, per Unbundled Loop			UAL, UHL, UCL, UEQ, ULS, UEA, UEANL, UEPSR, UEPSB	ULM2L		9.24	9.24								
	Unbundled Loop Modification Removal of Load Coils - 4 Wire less than or equal to 18K ft, per Unbundled Loop			UHL, UCL, UEA	ULM4L		9.24	9.24								
	Unbundled Loop Modification Removal of Bridged Tap Removal, per unbundled loop			UAL, UHL, UCL, UEQ, ULS, UEA, UEANL, UEPSR, UEPSB	ULMBT		10.47	10.47								
SUB-LOOPS																
Sub-Loop Distribution																
	Sub-Loop - Per Cross Box Location - CLEC Feeder Facility Set-Up	I		UEANL	USBSA		207.91	207.91								
	Sub-Loop - Per Cross Box Location - Per 25 Pair Panel Set-Up	I		UEANL	USBSB		12.50	12.50								
	Sub-Loop - Per Building Equipment Room - CLEC Feeder Facility Set-Up	I		UEANL	USBSC		80.87	80.87								
	Sub-Loop - Per Building Equipment Room - Per 25 Pair Panel Set-Up	I		UEANL	USBSD		45.04	45.04								
	Sub-Loop Distribution Per 2-Wire Analog Voice Grade Loop - Zone 1	I	1	UEANL	USBN2	6.34	85.03	39.05	59.81	7.90						
	Sub-Loop Distribution Per 2-Wire Analog Voice Grade Loop - Zone 2	I	2	UEANL	USBN2	9.06	85.03	39.05	59.81	7.90						
	Sub-Loop Distribution Per 2-Wire Analog Voice Grade Loop - Zone 3	I	3	UEANL	USBN2	14.82	85.03	39.05	59.81	7.90						

CATEGORY	RATE ELEMENTS	Interim	Zone	BCS	USOC	RATES ($)					Svc Order Submitted Elec per LSR	Svc Order Submitted Manually per LSR	Incremental Charge - Manual Svc Order vs. Electronic-1st	Incremental Charge - Manual Svc Order vs. Electronic-Add'l	Incremental Charge - Manual Svc Order vs. Electronic-Disc 1st	Incremental Charge - Manual Svc Order vs. Electronic-Disc Add'l
						Rec	Nonrecurring		Nonrecurring Disconnect		OSS Rates ($)					
							First	Add'l	First	Add'l	SOMEC	SOMAN	SOMAN	SOMAN	SOMAN	SOMAN
	Order Coordination for Unbundled Sub-Loops, per sub-loop pair			UEANL	USBMC		9.00	9.00								
	Sub-Loop Distribution Per 4-Wire Analog Voice Grade Loop - Zone 1		1	UEANL	USBN4	8.14	102.31	56.32	65.24	10.88						
	Sub-Loop Distribution Per 4-Wire Analog Voice Grade Loop - Zone 2		2	UEANL	USBN4	8.63	102.31	56.32	65.24	10.88						
	Sub-Loop Distribution Per 4-Wire Analog Voice Grade Loop - Zone 3		3	UEANL	USBN4	25.60	102.31	56.32	65.24	10.88						
	Order Coordination for Unbundled Sub-Loops, per sub-loop pair			UEANL	USBMC		9.00	9.00								
	Sub-Loop 2-Wire Intrabuilding Network Cable (INC)	I		UEANL	USBR2	2.57	68.35	22.36	59.81	7.90						
	Order Coordination for Unbundled Sub-Loops, per sub-loop pair			UEANL	USBMC		9.00	9.00								
	Sub-Loop 4-Wire Intrabuilding Network Cable (INC)	I		UEANL	USBR4	4.98	76.49	30.51	65.24	10.88						
	Order Coordination for Unbundled Sub-Loops, per sub-loop pair			UEANL	USBMC		9.00	9.00								
	Loop Testing - Basic 1st Half Hour			UEANL	URET1		46.88	46.88								
	Loop Testing - Basic Additional Half Hour			UEANL	URETA		24.16	24.16								
	2 Wire Copper Unbundled Sub-Loop Distribution - Zone 1	I	1	UEF	UCS2X	5.45	85.03	39.05	59.81	7.90						
	2 Wire Copper Unbundled Sub-Loop Distribution - Zone 2	I	2	UEF	UCS2X	7.06	85.03	39.05	59.81	7.90						
	2 Wire Copper Unbundled Sub-Loop Distribution - Zone 3	I	3	UEF	UCS2X	9.67	85.03	39.05	59.81	7.90						
	Order Coordination for Unbundled Sub-Loops, per sub-loop pair			UEF	USBMC		9.00	9.00								
	4 Wire Copper Unbundled Sub-Loop Distribution - Zone 1	I	1	UEF	UCS4X	7.09	102.31	56.32	65.24	10.88						
	4 Wire Copper Unbundled Sub-Loop Distribution - Zone 2	I	2	UEF	UCS4X	8.66	102.31	56.32	65.24	10.88						
	4 Wire Copper Unbundled Sub-Loop Distribution - Zone 3	I	3	UEF	UCS4X	19.40	102.31	56.32	65.24	10.88						
	Order Coordination for Unbundled Sub-Loops, per sub-loop pair			UEF	USBMC		9.00	9.00								
	Loop Testing - Basic 1st Half Hour			UEF	URET1		46.88	46.88								
	Loop Testing - Basic Additional Half Hour			UEF	URETA		24.16	24.16								
	Unbundled Network Terminating Wire (UNTW)															
	Unbundled Network Terminating Wire (UNTW) per Pair			UENTW	UENPP	0.53	23.51	23.51								
	Network Interface Device (NID)															
	Network Interface Device (NID) - 1-2 lines			UENTW	UND12		73.53	49.47								
	Network Interface Device (NID) - 1-6 lines			UENTW	UND16		115.96	91.91								
	Network Interface Device Cross Connect - 2 W			UENTW	UNDC2		8.56	8.56								
	Network Interface Device Cross Connect - 4W			UENTW	UNDC4		8.56	8.56								
UNE OTHER, PROVISIONING ONLY - NO RATE																
	NID - Dispatch and Service Order for NID installation			UENTW	UNDBX	0.00	0.00									
	UNTW Circuit Id Establishment, Provisioning Only - No Rate			UENTW	UENCE	0.00	0.00									
	Unbundled Contract Name, Provisioning Only - No Rate			UEANL,UEF,UEQ,UENTW	UNECN	0.00	0.00									
UNE OTHER, PROVISIONING ONLY - NO RATE																
	Unbundled Contact Name, Provisioning Only - no rate			UAL,UCL,UDC,UDL,UDN,UEA,UHL,USL	UNECN	0.00	0.00									
	Unbundled Sub-Loop Feeder-2 Wire Cross Box Jumper - no rate			UEA,UDN,UCL,UDC	USBFQ	0.00	0.00									
	Unbundled Sub-Loop Feeder-4 Wire Cross Box Jumper - no rate			UEA,USL,UCL,UDL	USBFR	0.00	0.00									
	Unbundled DS1 Loop - Superframe Format Option - no rate			USL	CCOSF	0.00	0.00									
	Unbundled DS1 Loop - Expanded Superframe Format option - no rate			USL	CCOEF	0.00	0.00									
HIGH CAPACITY UNBUNDLED LOCAL LOOP																
	High Capacity Unbundled Local Loop - DS3 - Per Mile per month			UE3	1L5ND	9.25										
	High Capacity Unbundled Local Loop - DS3 - Facility Termination per month			UE3	UE3PX	308.31	634.087	388.792	198.95	138.483						
	High Capacity Unbundled Local Loop - STS-1 - Per Mile per month			UDLSX	1L5ND	9.25										
	High Capacity Unbundled Local Loop - STS-1 - Facility Termination per month			UDLSX	UDLS1	320.51	634.087	388.792	198.95	138.483						
LOOP MAKE-UP																

CATEGORY	RATE ELEMENTS	Interim	Zone	BCS	USOC	RATES ($) Rec	Nonrecurring First	Nonrecurring Add'l	Nonrecurring Disconnect First	Nonrecurring Disconnect Add'l	Svc Order Submitted Elec per LSR (OSS Rates ($)) SOMEC	Svc Order Submitted Manually per LSR (OSS Rates ($)) SOMAN	Incremental Charge - Manual Svc Order vs. Electronic-1st (OSS Rates ($)) SOMAN	Incremental Charge - Manual Svc Order vs. Electronic-Add'l (OSS Rates ($)) SOMAN	Incremental Charge - Manual Svc Order vs. Electronic-Disc 1st (OSS Rates ($)) SOMAN	Incremental Charge - Manual Svc Order vs. Electronic-Disc Add'l (OSS Rates ($)) SOMAN
	Loop Makeup - Preordering Without Reservation, per working or spare facility queried (Manual).			UMK	UMKLW		23.40	23.40								
	Loop Makeup - Preordering With Reservation, per spare facility queried (Manual).			UMK	UMKLP		24.85	24.85								
	Loop Makeup--With or Without Reservation, per working or spare facility queried (Mechanized)			UMK	UMKMQ		0.67	0.67								
LINE SPLITTING																
LINE SPLITTING																
END USER ORDERING-CENTRAL OFFICE BASED																
	Line Splitting - per line activation DLEC owned splitter			UEPSR UEPSB	UREOS	0.61										
	Line Splitting - per line activation BST owned - physical			UEPSR UEPSB	UREBP	0.61	37.02	21.20	21.10	9.87						
	Line Splitting - per line activation BST owned - virtual			UEPSR UEPSB	UREBV	0.61	37.02	21.20	21.10	9.87						
MAINTENANCE OF SERVICE																
NOTE: The Expedite charge will be maintained commensurate with BellSouth's FCC No.1 Tariff, Section 13.3.1 as applicable.																
	No Trouble Found - per 1/2 hour increments - Basic						80.00	55.00								
	No Trouble Found - per 1/2 hour increments - Overtime						90.00	65.00								
	No Trouble Found - per 1/2 hour increments - Premium						100.00	75.00								
UNBUNDLED DEDICATED TRANSPORT																
INTEROFFICE CHANNEL - DEDICATED TRANSPORT																
	Interoffice Channel - Dedicated Transport - 2-Wire Voice Grade - Per Mile per month			U1TVX	1L5XX	0.01										
	Interoffice Channel - Dedicated Transport- 2- Wire Voice Grade - Facility Termination			U1TVX	U1TV2	29.11	47.34	31.78	22.77	8.75						
	Interoffice Channel - Dedicated Transpor t- 2-Wire Voice Grade Rev Bat. - Per Mile per month			U1TVX	1L5XX	0.01										
	Interoffice Channel - Dedicated Transport- 2- Wire VG Rev Bat. - Facility Termination			U1TVX	U1TR2	29.11	47.34	31.78	22.77	8.75						
	Interoffice Channel - Dedicated Transport - 4-Wire Voice Grade - Per Mile per month			U1TVX	1L5XX	0.01										
	Interoffice Channel - Dedicated Transport - 4- Wire Voice Grade - Facility Termination			U1TVX	U1TV4	25.86	47.34	31.78	22.77	8.75						
	Interoffice Channel - Dedicated Transport - 56 kbps - per mile per month			U1TDX	1L5XX	0.0115										
	Interoffice Channel - Dedicated Transport - 56 kbps - Facility Termination			U1TDX	U1TD5	20.97	47.35	31.78	22.77	8.75						
	Interoffice Channel - Dedicated Transport - 64 kbps - per mile per month			U1TDX	1L5XX	0.0115										
	Interoffice Channel - Dedicated Transport - 64 kbps - Facility Termination			U1TDX	U1TD6	20.97	47.35	31.78	22.77	8.75						
	Interoffice Channel - Dedicated Channel - DS1 - Per Mile per month			U1TD1	1L5XX	0.23										
	Interoffice Channel - Dedicated Tranport - DS1 - Facility Termination			U1TD1	U1TF1	96.04	105.52	98.46	23.09	20.49						
	Interoffice Channel - Dedicated Transport - DS3 - Per Mile per month			U1TD3	1L5XX	4.97										
	Interoffice Channel - Dedicated Transport - DS3 - Facility Termination per month			U1TD3	U1TF3	1,175.15	335.40	219.24	89.57	87.75						
	Interoffice Channel - Dedicated Transport - STS-1 - Per Mile per month			U1TS1	1L5XX	4.97										
	Interoffice Channel - Dedicated Transport - STS-1 - Facility Termination			U1TS1	U1TFS	1,149.51	335.40	219.24	89.57	87.75						
DARK FIBER																
	Dark Fiber, Four Fiber Strands, Per Route Mile or Fraction Thereof per month - Local Channel			UDF, UDFCX	1L5DC	54.06										
	Dark Fiber, Four Fiber Strands, Per Route Mile or Fraction Thereof per month - Interoffice Channel			UDF, UDFCX	1L5DF	30.74										
	NRC Dark Fiber - Interoffice Channel			UDF, UDFCX	UDF14		732.53	192.67	377.27	241.67						
	Dark Fiber, Four Fiber Strands, Per Route Mile or Fraction Thereof per month - Local Loop			UDF, UDFCX	1L5DL	54.06										
8XX ACCESS TEN DIGIT SCREENING																
	8XX Access Ten Digit Screening, Per Call					0.0006478										
	8XX Access Ten Digit Screening w/ 8FL No. Delivery,					0.0006478										
	8XX Access Ten Digit Screening, w/ POTS No. Delivery,					0.0006478										
LINE INFORMATION DATA BASE ACCESS (LIDB)																

UNBUNDLED NETWORK ELEMENTS - Kentucky

Attachment: 2 Ex. A

CATEGORY	RATE ELEMENTS	Interim	Zone	BCS	USOC	RATES ($)					Svc Order Submitted Elec per LSR	Svc Order Submitted Manually per LSR	Incremental Charge - Manual Svc Order vs. Electronic-1st	Incremental Charge - Manual Svc Order vs. Electronic-Add'l	Incremental Charge - Manual Svc Order vs. Electronic-Disc 1st	Incremental Charge - Manual Svc Order vs. Electronic-Disc Add'l
						Rec	Nonrecurring		Nonrecurring Disconnect		OSS Rates ($)					
							First	Add'l	First	Add'l	SOMEC	SOMAN	SOMAN	SOMAN	SOMAN	SOMAN
	LIDB Common Transport Per Query					0.000023										
	LIDB Validation Per Query					0.0137322										
	LIDB Originating Point Code Establishment or Change			OQU	NRBPX		55.12		67.59							
CALLING NAME (CNAM) SERVICE																
	CNAM for DB Owners, Per Query					0.0010348										
	CNAM for Non DB Owners, Per Query					0.0010348										
LNP Query Service																
	LNP Charge Per query					0.0008695										
	LNP Service Establishment Manual						13.82	13.82	12.71	12.71						
	LNP Service Provisioning with Point Code Establishment						953.27	487.00	431.95	317.61						
SELECTIVE ROUTING																
	Selective Routing Per Unique Line Class Code Per Request Per Switch						93.53	93.53	15.58	15.58						
VIRTUAL COLLOCATION																
	Virtual Collocation-2 Wire Cross Connects (Loop) for Line Splitting			UEPSR UEPSB	VE1LS	0.0309	24.68	23.68	12.14	10.95						
PHYSICAL COLLOCATION																
	Physical Collocation-2 Wire Cross Connects (Loop) for Line Splitting			UEPSR UEPSB	PE1LS	0.0333	24.68	23.68	12.14	10.95						
AIN SELECTIVE CARRIER ROUTING																
	Regional Service Establishment						193,401.00	193,401.00	9,483.34	9,483.34						
	End Office Establishment						194.09	194.09	0.85	0.85						
	Line/Port NRC, per end user						2.06	2.06								
	Query NRC, per query					0.0037502										
AIN - BELLSOUTH AIN SMS ACCESS SERVICE																
	AIN SMS Access Service - Service Establishment, Per State, Initial Setup			A1N	CAMSE		43.55	43.55	44.93	44.93						
	AIN SMS Access Service - Port Connection - Dial/Shared Access			A1N	CAMDP		8.64	8.64	10.03	10.03						
	AIN SMS Access Service - Port Connection - ISDN Access			A1N	CAM1P		8.64	8.64	10.03	10.03						
	AIN SMS Access Service - User Identification Codes - Per User ID Code			A1N	CAMAU		38.65	38.65	29.88	29.88						
	AIN SMS Access Service - Security Card, Per User ID Code, Initial or Replacement			A1N	CAMRC		75.08	75.08	12.93	12.93						
	AIN SMS Access Service - Storage, Per Unit (100 Kilobytes)					0.0025										
	AIN SMS Access Service - Session, Per Minute					0.666										
	AIN SMS Access Service - Company Performed Session, Per Minute					0.4608										
SIGNALING (CCS7)																
	CCS7 Signaling Usage, Per TCAP Message					0.0000656										
	CCS7 Signaling Usage, Per ISUP Message					0.0000164										
911 PBX LOCATE																
	911 PBX LOCATE DATABASE CAPABILITY															
	Service Establishment per CLEC per End User Account			9PBDC	9PBEU		1,814.00									
	Changes to TN Range or Customer Profile			9PBDC	9PBTN		181.57									
	Per Telephone Number (Monthly)			9PBDC	9PBMM	0.07										
	Change Company (Service Provider) ID			9PBDC	9PBPC		533.00									
	PBX Locate Service Support per CLEC (Monthlt)			9PBDC	9PBMR	179.88										
	Service Order Charge			9PBDC	9PBSC		7.86									
	911 PBX LOCATE TRANSPORT COMPONENT															
	See Att 3															
ENHANCED EXTENDED LINK (EELs)																
	NOTE: The monthly recurring and non-recurring charges below will apply and the Switch-As-Is Charge will not apply for UNE combinations provisioned as ' Ordinarily Combined' Network Elements.															
	NOTE: The monthly recurring and the Switch-As-Is Charge and not the non-recurring charges below will apply for UNE combinations provisioned as ' Currently Combined' Network Elements.															
	2-WIRE VOICE GRADE LOOP FOR USE IN A COMBINATION															
	2-Wire VG Loop (SL2) in Combination - Zone 1		1	UNCVX	UEAL2	12.67	125.22	60.48	59.69	7.84						
	2-Wire VG Loop (SL2) in Combination - Zone 2		2	UNCVX	UEAL2	17.45	125.22	60.48	59.69	7.84						
	2-Wire VG Loop (SL2) in Combination - Zone 3		3	UNCVX	UEAL2	33.22	125.22	60.48	59.69	7.84						
	Voice Grade COCI - Per Month			UNCVX	1D1VG	0.62	6.71	4.84								
	4-WIRE VOICE GRADE LOOP FOR USE IN A COMBINATION															
	4-Wire Analog Voice Grade Loop in Combination - Zone 1		1	UNCVX	UEAL4	29.26	125.22	60.48	59.69	7.84						
	4-Wire Analog Voice Grade Loop in Combination - Zone 2		2	UNCVX	UEAL4	34.25	125.22	60.48	59.69	7.84						
	4-Wire Analog Voice Grade Loop in Combination - Zone 3		3	UNCVX	UEAL4	85.06	125.22	60.48	59.69	7.84						
	Voice Grade COCI in combination - per month			UNCVX	1D1VG	0.62	6.71	4.84								

CATEGORY	RATE ELEMENTS	Interim	Zone	BCS	USOC	RATES ($)					Svc Order Submitted Elec per LSR	Svc Order Submitted Manually per LSR	Incremental Charge - Manual Svc Order vs. Electronic-1st	Incremental Charge - Manual Svc Order vs. Electronic-Add'l	Incremental Charge - Manual Svc Order vs. Electronic-Disc 1st	Incremental Charge - Manual Svc Order vs. Electronic-Disc Add'l
						Rec	Nonrecurring		Nonrecurring Disconnect		OSS Rates ($)					
							First	Add'l	First	Add'l	SOMEC	SOMAN	SOMAN	SOMAN	SOMAN	SOMAN
	4-WIRE 56 KBPS DIGITAL LOOP FOR USE IN A COMBINATION															
	4-Wire 56Kbps Digital Grade Loop in Combination - Zone 1		1	UNCDX	UDL56	27.59	125.22	60.48	59.69	7.84						
	4-Wire 56Kbps Digital Grade Loop in Combination - Zone 2		2	UNCDX	UDL56	32.48	125.22	60.48	59.69	7.84						
	4-Wire 56Kbps Digital Grade Loop in Combination - Zone 3		3	UNCDX	UDL56	36.37	125.22	60.48	59.69	7.84						
	OCU-DP COCI (data) per month (2.4-64kbs)			UNCDX	1D1DD	1.32	6.71	4.84								
	4-WIRE 64 KBPS DIGITAL LOOP FOR USE IN A COMBINATION															
	4-Wire 64Kbps Digital Grade Loop in Combination - Zone 1		1	UNCDX	UDL64	27.59	125.22	60.48	59.69	7.84						
	4-Wire 64Kbps Digital Grade Loop in Combination - Zone 2		2	UNCDX	UDL64	32.48	125.22	60.48	59.69	7.84						
	4-Wire 64Kbps Digital Grade Loop in Combination - Zone 3		3	UNCDX	UDL64	36.37	125.22	60.48	59.69	7.84						
	OCU-DP COCI (data) - in combination - per month (2.4-64kbs)			UNCDX	1D1DD	1.32	6.71	4.84								
	2-WIRE ISDN LOOP FOR USE IN COMBINATION															
	2-Wire ISDN Loop in Combination - Zone 1		1	UNCNX	U1L2X	18.44	125.22	60.48	59.69	7.84						
	2-Wire ISDN Loop in Combination - Zone 2		2	UNCNX	U1L2X	25.08	125.22	60.48	59.69	7.84						
	2-Wire ISDN Loop in Combination - Zone 3		3	UNCNX	U1L2X	42.87	125.22	60.48	59.69	7.84						
	2-wire ISDN COCI (BRITE) - in combination - per month			UNCNX	UC1CA	2.84	6.71	4.84								
	4-WIRE DS1 DIGITAL LOOP FOR USE IN A COMBINATION															
	4-Wire DS1 Digital Loop in Combination - Zone 1		1	UNC1X	USLXX	86.47	210.70	114.60	63.96	17.97						
	4-Wire DS1 Digital Loop in Combination - Zone 2		2	UNC1X	USLXX	114.10	210.70	114.60	63.96	17.97						
	4-Wire DS1 Digital Loop in Combination - Zone 3		3	UNC1X	USLXX	297.76	210.70	114.60	63.96	17.97						
	DS1 COCI in combination per month			UNC1X	UC1D1	11.80	6.71	4.84								
	2 WIRE VOICE GRADE INTEROFFICE TRANSPORT FOR USE IN A COMBINATION															
	Interoffice Transport - 2-wire VG - Dedicated- Per Mile Per Month			UNCVX	1L5XX	0.01										
	Interoffice Transport - 2-wire VG - Dedicated - Facility Termination per month			UNCVX	U1TV2	23.95	98.09	53.67	56.31	22.42						
	4 WIRE VOICE GRADE INTEROFFICE TRANSPORT FOR USE IN A COMBINATION															
	Interoffice Transport - 4-wire VG - Dedicated - Per Mile Per Month			UNCVX	1L5XX	0.01										
	Interoffice Transport - 4-wire VG - Dedicated - Facility Termination per month			UNCVX	U1TV4	23.95	98.09	53.67	56.31	22.42						
	DS1 INTEROFFICE TRANSPORT FOR COMBINATION															
	Interoffice Transport - Dedicated - DS1 combination - Per Mile per month			UNC1X	1L5XX	0.19										
	Interoffice Transport - Dedicated - DS1 combination - Facility Termination per month			UNC1X	U1TF1	79.02	181.24	123.53	56.72	22.32						
	1/0 Channelization System in combination Per Month			UNC1X	MQ1	113.33	57.26	14.74	1.86	1.67						
	DS3 INTEROFFICE TRANSPORT FOR USE IN A COMBINATION															
	Interoffice Transport - Dedicated - DS3 combination - Per Mile Per Month			UNC3X	1L5XX	4.09										
	Interoffice Transport - Dedicated - DS3 - Facility Termination per month			UNC3X	U1TF3	966.89	350.56	141.58	48.00	23.39						
	STS-1 INTEROFFICE TRANSPORT FOR USE IN COMBINATION															
	Interoffice Transport - Dedicated - STS-1 combination - Per Mile Per Month			UNCSX	1L5XX	4.09										
	Interoffice Transport - Dedicated - STS-1 combination - Facility Termination per month			UNCSX	U1TFS	945.79	350.56	141.58	48.00	23.39						
	4-WIRE 56 KBPS DIGITAL LOOP WITH 56 KBPS INTEROFFICE TRANSPORT															
	4-wire 56 kbps Local Loop in combination - Zone 1		1	UNCDX	UDL56	27.59	125.22	60.48	59.69	7.84						
	4-wire 56 kbps Local Loop in combination - Zone 2		2	UNCDX	UDL56	32.48	125.22	60.48	59.69	7.84						
	4-wire 56 kbps Local Loop in combination - Zone 3		3	UNCDX	UDL56	36.37	125.22	60.48	59.69	7.84						
	Interoffice Transport - Dedicated - 4-wire 56 kbps combination - Per Mile per month			UNCDX	1L5XX	0.01										
	Interoffice Transport - Dedicated - 4-wire 56 kbps combination - Facility Termination per month			UNCDX	U1TD5	17.25	98.09	53.67	56.31	22.42						
	4-WIRE 64 KBPS DIGITAL EXTENDED LOOP WITH 64 KBPS INTEROFFICE TRANSPORT															
	4-wire 64 kbps Lcoal Loop in Combination - Zone 1		1	UNCDX	UDL64	27.59	125.22	60.48	59.69	7.84						
	4-wire 64 kbps Lcoal Loop in Combination - Zone 2		2	UNCDX	UDL64	32.48	125.22	60.48	59.69	7.84						
	4-wire 64 kbps Lcoal Loop in Combination - Zone 3		3	UNCDX	UDL64	36.37	125.22	60.48	59.69	7.84						
	Interoffice Transport - Dedicated - 4-wire 64 kbps combination - Per Mile per month			UNCDX	1L5XX	0.01										
	Interoffice Transport - Dedicated - 4-wire 64 kbps combination - Facility Termination per month			UNCDX	U1TD6	17.25	98.09	53.67	56.31	22.42						
	4-WIRE 56 KBPS DIGITAL EXTENDED LOOP WITH DS0 INTEROFFICE TRANSPORT															
	4-wire 56 kbps Local Loop in combination - Zone 1		1	UNCDX	UDL56	27.59	125.22	60.48	59.69	7.84						

CATEGORY	RATE ELEMENTS	Interim	Zone	BCS	USOC	RATES ($)					Svc Order Submitted Elec per LSR	Svc Order Submitted Manually per LSR	Incremental Charge - Manual Svc Order vs. Electronic-1st	Incremental Charge - Manual Svc Order vs. Electronic-Add'l	Incremental Charge - Manual Svc Order vs. Electronic-Disc 1st	Incremental Charge - Manual Svc Order vs. Electronic-Disc Add'l
						Rec	Nonrecurring		Nonrecurring Disconnect		OSS Rates ($)					
							First	Add'l	First	Add'l	SOMEC	SOMAN	SOMAN	SOMAN	SOMAN	SOMAN
	4-wire 56 kbps Local Loop in combination - Zone 2		2	UNCDX	UDL56	32.48	125.22	60.48	59.69	7.84						
	4-wire 56 kbps Local Loop in combination - Zone 3		3	UNCDX	UDL56	36.37	125.22	60.48	59.69	7.84						
	4-wiree 56 kbps Interoffice Transport - Dedicated - Per Mile per month			UNCDX	1L5XX	0.01										
	4-wire 56 kbps Interoffice Transport - Dedicated - Facility Termination per month			UNCDX	U1TD5	17.25	98.09	53.67	56.31	22.42						
4-WIRE 64 KBPS DIGITAL EXTENDED LOOP WITH DS0 INTEROFFICE TRANSPORT																
	4-wire 64 kbps Local Loop in combination - Zone 1		1	UNCDX	UDL64	27.59	125.22	60.48	59.69	7.84						
	4-wire 64 kbps Local Loop in combination - Zone 2		2	UNCDX	UDL64	32.48	125.22	60.48	59.69	7.84						
	4-wire 64 kbps Local Loop in combination - Zone 3		3	UNCDX	UDL64	36.37	125.22	60.48	59.69	7.84						
	I4-wire 65 kbps Interoffice Transport - Dedicated - Per Mile per month			UNCDX	1L5XX	0.01										
	4-wire 64 kbps Interoffice Transport - Dedicated - Facility Termination per month			UNCDX	U1TD6	17.25	98.09	53.67	56.31	22.42						
DS1 DIGITAL LOOP AND DS1 INTERFOFFICE TRANSPORT																
	4-Wire DS1 Digital Loop in Combination - Zone 1		1	UNC1X	USLXX	86.47	210.70	114.60	63.96	17.97						
	4-Wire DS1 Digital Loop in Combination - Zone 2		2	UNC1X	USLXX	114.10	210.70	114.60	63.96	17.97						
	4-Wire DS1 Digital Loop in Combination - Zone 3		3	UNC1X	USLXX	297.76	210.70	114.60	63.96	17.97						
	Interoffice Transport - Dedicated - DS1 combination - Per Mile per month			UNC1X	1L5XX	0.19										
	Interoffice Transport - Dedicated - DS1 combination - Facility Termination per month			UNC1X	U1TF1	79.02	181.24	123.53	56.72	22.32						
DS3 DIGITAL LOOP WITH DEDICATED DS3 INTEROFFICE TRANSPORT																
	DS3 Local Loop in combination - per mile per month			UNC3X	1L5ND	10.6375										
	DS3 Local Loop in combination - Facility Termination per month			UNC3X	UE3PX	354.5565	634.087	388.792	198.95	138.483						
	Interoffice Transport - Dedicated - DS3 - Per Mile per month			UNC3X	1L5XX	4.09										
	Interoffice Transport - Dedicated - DS3 combination - Facility Termination per month			UNC3X	U1TF3	966.89	350.56	141.58	48.00	23.39						
STS-1 DIGITAL LOOP WITH DEDICATED STS-1 INTEROFFICE TRANSPORT																
	STS-1 Local Lolp in combination - per mile per month			UNCSX	1L5ND	10.6375										
	STS-1 Local Loop in combination - Facility Termination per month			UNCSX	UDLS1	368.5865	634.087	388.792	198.95	138.483						
	Interoffice Transport - Dedicated - STS-1 combination - per mile per month			UNCSX	1L5XX	4.09										
	Interoffice Transport - Dedicated - STS-1 combination - Facility Termination per month			UNCSX	U1TFS	945.79	350.56	141.58	48.00	23.39						
ADDITIONAL NETWORK ELEMENTS																
When used as a part of a currently combined facility, the non-recurrng charges do not apply, but a Switch As Is charge does apply.																
When used as ordinarily combined network elements in All States, the non-recurring charges apply and the Switch As Is Charge does not.																
	Commingling Authorization			UNCVX, UNCDX, UNC1X, UNC3X, UNCSX, U1TD1, U1TD3, U1TS1, UE3, UDLSX, U1TVX, U1TDX, U1TUB	CMGAU	0.00	0.00	0.00	0.00	0.00						
Nonrecurring Currently Combined Network Elements "Switch As Is" Charge (One applies to each combination)																
	Nonrecurring Currently Combined Network Elements Switch -As-Is Charge			UNCVX, UNCDX, UNC1X, UNC3X, UNCSX	UNCCC		8.98	8.98	11.17	11.17						
Optional Features & Functions:																
	Clear Channel Capability Extended Frame Option - per DS1	I		U1TD1, ULDD1,UNC1X	CCOEF		0.00	0.00	0.00	0.00						
	Clear Channel Capability Super FrameOption - per DS1	I		U1TD1, ULDD1,UNC1X	CCOSF		0.00	0.00	0.00	0.00						
	Clear Channel Capability (SF/ESF) Option - Subsequent Activity - per DS1	I		ULDD1, U1TD1, UNC1X, USL	NRCCC		184.91	23.82	1.99	0.78						
	C-bit Parity Option - Subsequent Activity - per DS3	i		U1TD3, ULDD3, UE3, UNC3X	NRCC3		205.70	7.20	0.6924	0.00						
MULTIPLEXERS																
	DS1 to DS0 Channel System per month			UNC1X	MQ1	113.33	57.26	14.74	1.86	1.67						
	OCU-DP COCI (data) - DS1 to DS0 Channel System - per month (2.4-64kbs) used for a Local Loop			UDL	1D1DD	1.32	10.07	7.08								

UNBUNDLED NETWORK ELEMENTS - Kentucky

Attachment: 2 Ex. A

CATEGORY	RATE ELEMENTS	Interim	Zone	BCS	USOC	RATES ($)					Svc Order Submitted Elec per LSR	Svc Order Submitted Manually per LSR	Incremental Charge - Manual Svc Order vs. Electronic-1st	Incremental Charge - Manual Svc Order vs. Electronic-Add'l	Incremental Charge - Manual Svc Order vs. Electronic-Disc 1st	Incremental Charge - Manual Svc Order vs. Electronic-Disc Add'l
						Rec	Nonrecurring		Nonrecurring Disconnect		OSS Rates ($)					
							First	Add'l	First	Add'l	SOMEC	SOMAN	SOMAN	SOMAN	SOMAN	SOMAN
	OCU-DP COCI (data) - DS1 to DS0 Channel System - per month (2.4-64kbs) used for connection to a channelized DS1 Local Channel in the same SWC as collocation			U1TUD	1D1DD	1.32	10.07	7.08								
	2-wire ISDN COCI (BRITE) - DS1 to DS0 Channel Systsem - per month for a Local Loop			UDN	UC1CA	2.84	10.07	7.08								
	2-wire ISDN COCI (BRITE) - DS1 to DS0 Channel Systsem - per month used for connection to a channelized DS1 Local Channel in the same SWC as collocation			U1TUB	UC1CA	2.84	10.07	7.08								
	Voice Grade COCI - DS1 to DS0 Channel System - per month used for a Local Loop			UEA	1D1VG	0.6228	10.07	7.08								
	Voice Grade COCI - DS1 to DS0 Channel System - per month used for connection to a channelized DS1 Local Channel in the same SWC as collocation			U1TUC	1D1VG	0.6228	10.07	7.08								
	DS3 to DS1 Channel System per month			UNC3X	MQ3	158.20	115.48	56.53	15.12	5.30						
	STS-1 to DS1 Channel System per month			UNCSX	MQ3	158.20	115.48	56.53	15.12	5.30						
	DS1 COCI used with Loop per month			USL	UC1D1	11.80	10.07	7.08								
	DS1 COCI (used for connection to a channelized DS1 Local Channel in the same SWC as collocation) per month			U1TUA	UC1D1	11.80	10.07	7.08								
	DS1 COCI used with Interoffice Channel per month			U1TD1	UC1D1	11.80	10.07	7.08								
	DS3 Interface Unit (DS1 COCI) used with Local Channel per month			ULDD1	UC1D1	11.80	10.07	7.08								
UNBUNDLED LOCAL EXCHANGE SWITCHING(PORTS)																
	The Exchange Switching Port Rates Reflected Here Apply to Embedded Base Switching Ports as of March 10, 2005 and Consist of the TELRIC Cost Based Rates Plus $1.00 in Accordance with the TRRO.															
	Exchange Ports															
	NOTE: Although the Port Rate includes all available features in GA, KY, LA & TN, the desired features will need to be ordered using retail USOCs															
	2-WIRE VOICE GRADE LINE PORT RATES (RES)															
	Exchange Ports - 2-Wire Analog Line Port- Res.			UEPSR	UEPRL	2.49	3.74	3.63	2.23	2.13						
	Exchange Ports - 2-Wire Analog Line Port with Caller ID - Res.			UEPSR	UEPRC	2.49	3.74	3.63	2.23	2.13						
	Exchange Ports - 2-Wire Analog Line Port outgoing only - Res.			UEPSR	UEPRO	2.49	3.74	3.63	2.23	2.13						
	Exchange Ports - 2-Wire VG unbundled KY extended local dialing parity Port with Caller ID - Res.			UEPSR	UEPRM	2.49	3.74	3.63	2.23	2.13						
	Exchange Ports - 2-Wire VG unbundled res, low usage line port with Caller ID (LUM)			UEPSR	UEPAP	2.49	3.74	3.63	2.23	2.13						
	Exchange Ports - 2-Wire Voice Kentucky Residence Dialing Plan without Caller ID			UEPSR	UEPWE	2.49	3.74	3.63	2.23	2.13						
	2-Wire voice unbundled Low Usage Line Port without Caller ID Capability			UEPSR	UEPRT	2.49	3.74	3.63	2.23	2.13						
	Subsequent Activity			UEPSR	USASC	0.00	0.00	0.00								
	FEATURES															
	All Available Vertical Features			UEPSR	UEPVF	0.00	0.00	0.00								
	2-WIRE VOICE GRADE LINE PORT RATES (BUS)															
	Exchange Ports - 2-Wire Analog Line Port without Caller ID - Bus			UEPSB	UEPBL	2.49	3.74	3.63	2.23	2.13						
	Exchange Ports - 2-Wire VG unbundled Line Port with unbundled port with Caller+E484 ID - Bus.			UEPSB	UEPBC	2.49	3.74	3.63	2.23	2.13						
	Exchange Ports - 2-Wire Analog Line Port outgoing only - Bus.			UEPSB	UEPBO	2.49	3.74	3.63	2.23	2.13						
	Exchange Ports - 2-Wire VG unbundled KY extended local dialing parity Port with Caller ID - Bus.			UEPSB	UEPBM	2.49	3.74	3.63	2.23	2.13						
	Exhange Ports - 2-Wire VG unbundled incoming only port with Caller ID - Bus			UEPSB	UEPB1	2.49	3.74	3.63	2.23	2.13						
	Exchange Ports - 2-Wire Voice Kentucky Business Dialing Plan without Caller ID			UEPSB	UEPWF	2.49	3.74	3.63	2.23	2.13						
	2-Wire voice unbundled Incoming Only Port without Caller ID Capability			UEPSB	UEPBE	2.49	3.74	3.63	2.23	2.13						
	Subsequent Activity			UEPSB	USASC	0.00	0.00	0.00								
	FEATURES															
	All Available Vertical Features			UEPSB	UEPVF	0.00	0.00	0.00								
	EXCHANGE PORT RATES (DID & PBX)															
	2-Wire VG Unbundled 2-Way PBX Trunk - Res			UEPSE	UEPRD	2.49	39.05	18.17	15.38	0.89						
	2-Wire VG Line Side Unbundled 2-Way PBX Trunk - Bus			UEPSP	UEPPC	2.49	39.05	18.17	15.38	0.89						

UNBUNDLED NETWORK ELEMENTS - Kentucky

Attachment: 2 Ex. A

CATEGORY	RATE ELEMENTS	Interim	Zone	BCS	USOC	RATES ($)					Svc Order Submitted Elec per LSR	Svc Order Submitted Manually per LSR	Incremental Charge - Manual Svc Order vs. Electronic-1st	Incremental Charge - Manual Svc Order vs. Electronic-Add'l	Incremental Charge - Manual Svc Order vs. Electronic-Disc 1st	Incremental Charge - Manual Svc Order vs. Electronic-Disc Add'l
						Rec	Nonrecurring		Nonrecurring Disconnect		OSS Rates ($)					
							First	Add'l	First	Add'l	SOMEC	SOMAN	SOMAN	SOMAN	SOMAN	SOMAN
	2-Wire VG Line Side Unbundled Outward PBX Trunk - Bus			UEPSP	UEPPO	2.49	39.05	18.17	15.38	0.89						
	2-Wire VG Line Side Unbundled Incoming PBX Trunk - Bus			UEPSP	UEPP1	2.49	39.05	18.17	15.38	0.89						
	2-Wire Analog Long Distance Terminal PBX Trunk - Bus			UEPSP	UEPLD	2.49	39.05	18.17	15.38	0.89						
	2-Wire Voice Unbundled PBX LD Terminal Ports			UEPSP	UEPLD	2.49	39.05	18.17	15.38	0.89						
	2-Wire Vice Unbundled 2-Way PBX Usage Port			UEPSP	UEPXA	2.49	39.05	18.17	15.38	0.89						
	2-Wire Voice Unbundled PBX Toll Terminal Hotel Ports			UEPSP	UEPXB	2.49	39.05	18.17	15.38	0.89						
	2-Wire Voice Unbundled PBX LD DDD Terminals Port			UEPSP	UEPXC	2.49	39.05	18.17	15.38	0.89						
	2-Wire Voice Unbundled PBX LD Terminal Switchboard Port			UEPSP	UEPXD	2.49	39.05	18.17	15.38	0.89						
	2-Wire Voice Unbundled PBX LD Terminal Switchboard IDD Capable Port			UEPSP	UEPXE	2.49	39.05	18.17	15.38	0.89						
	2-Wire Voice Unbundled 2-Way PBX Kentucky Room Area Calling Port Without LUD			UEPSP	UEPXF	2.49	39.05	18.17	15.38	0.89						
	2-Wire Voice Unbundled PBX Kentucky LUD Area Calling Port			UEPSP	UEPXG	2.49	39.05	18.17	15.38	0.89						
	2-Wire Voice Unbundled PBX Kentucky Premium Callling Port			UEPSP	UEPXH	2.49	39.05	18.17	15.38	0.89						
	2-Wire Voice Unbundled 2-Way PBX Kentucky Area Callling Port Without LUD			UEPSP	UEPXJ	2.49	39.05	18.17	15.38	0.89						
	2-Wire Voice Unbundled 2-Way PBX Hotel/Hospital Economy Administrative Calling Port			UEPSP	UEPXL	2.49	39.05	18.17	15.38	0.89						
	2-Wire Voice Unbundled 2-Way PBX Hotel/Hospital Economy Room Calling Port			UEPSP	UEPXM	2.49	39.05	18.17	15.38	0.89						
	2-Wire Voice Unbundled 1-Way Outgoing PBX Hotel/Hospital Discount Room Calling Port			UEPSP	UEPXO	2.49	39.05	18.17	15.38	0.89						
	2-Wire Voice Unbundled 1-Way Outgoing PBX Measured Port			UEPSP	UEPXS	2.49	39.05	18.17	15.38	0.89						
	Subsequent Activity			UEPSP	USASC	0.00	0.00	0.00								
FEATURES																
	All Available Vertical Features			UEPSP UEPSE	UEPVF	0.00	0.00	0.00								
Local Switching Features offered with Port																
NOTE: Transmission/usage charges associated with POTS circuit switched usage will also apply to circuit switched voice and/or circuit switched data transmission by B-Channels associated with 2-wire ISDN ports.																
NOTE: Access to B Channel or D Channel Packet capabilities will be available only through BFR/New Business Request Process. Rates for the packet capabilities will be determined via the Bona Fide Request/New Business Request Process.																
2-WIRE VOICE GRADE LINE PORT RATES (DID)																
	Exchange Ports - 2-Wire DID Port			UEPEX	UEPP2	11.51	92.18	15.82	52.16	5.30						
2-WIRE VOICE GRADE LINE PORT RATES (ISDN-BRI)																
	Exchange Ports - 2-Wire ISDN Port (See Notes below.)			UEPTX, UEPSX	U1PMA	14.46	60.60	50.67	32.83	14.17						
	All Features Offered			UEPTX, UEPSX	UEPVF	0.00	0.00	0.00								
	Exchange Ports - 2-Wire ISDN Port -- Channel Profiles			UEPTX, UEPSX	U1UMA	0.00	0.00	0.00								
NOTE: Transmission/usage charges associated with POTS circuit switched usage will also apply to circuit switched voice and/or circuit switched data transmission by B-Channels associated with 2-wire ISDN ports.																
NOTE: Access to B Channel or D Channel Packet capabilities will be available only through BFR/New Business Request Process. Rates for the packet capabilities will be determined via the Bona Fide Request/New Business Request Process.																
UNBUNDLED PORT with REMOTE CALL FORWARDING CAPABILITY																
UNBUNDLED REMOTE CALL FORWARDING SERVICE - RESIDENCE																
	Unbundled Remote Call Forwarding Service, Area Calling, Res			UEPVR	UERAC	2.49	3.74	3.63								
	Unbundled Remote Call Forwarding Service, Local Calling - Res			UEPVR	UERLC	2.49	3.74	3.63								
	Unbundled Remote Call Forwarding Service, InterLATA - Res			UEPVR	UERTE	2.49	3.74	3.63								
	Unbundled Remote Call Forwarding Service, IntraLATA - Res			UEPVR	UERTR	2.49	3.74	3.63								
Non-Recurring																
	Unbundled Remote Call Forwarding Service - Conversion - Switch-as-is			UEPVR	USAC2		0.10	0.10								
	Unbundled Remote Call Forwarding Service - Conversion with allowed change (PIC and LPIC)			UEPVR	USACC		0.10	0.10								
UNBUNDLED REMOTE CALL FORWARDING - Bus																
	Unbundled Remote Call Forwarding Service, Area Calling - Bus			UEPVB	UERAC	2.49	3.74	3.63								
	Unbundled Remote Call Forwarding Service, Local Calling - Bus			UEPVB	UERLC	2.49	3.74	3.63								
	Unbundled Remote Call Forwarding Service, InterLATA - Bus			UEPVB	UERTE	2.49	3.74	3.63								
	Unbundled Remote Call Forwarding Service, IntraLATA - Bus			UEPVB	UERTR	2.49	3.74	3.63								
	Unbundled Remote Call Forwarding Service Expanded and Exception Local Calling			UEPVB	UERVJ	2.49	3.74	3.63								
Non-Recurring																
	Unbundled Remote Call Forwarding Service - Conversion - Switch-as-is			UEPVB	USAC2		0.10	0.10								
	Unbundled Remote Call Forwarding Service - Conversion with allowed change (PIC and LPIC)			UEPVB	USACC		0.10	0.10								
UNBUNDLED LOCAL SWITCHING, PORT USAGE																
End Office Switching (Port Usage)																

CATEGORY	RATE ELEMENTS	Interim	Zone	BCS	USOC	RATES ($)					Svc Order Submitted Elec per LSR	Svc Order Submitted Manually per LSR	Incremental Charge - Manual Svc Order vs. Electronic-1st	Incremental Charge - Manual Svc Order vs. Electronic-Add'l	Incremental Charge - Manual Svc Order vs. Electronic-Disc 1st	Incremental Charge - Manual Svc Order vs. Electronic-Disc Add'l
						Rec	Nonrecurring		Nonrecurring Disconnect		OSS Rates ($)					
							First	Add'l	First	Add'l	SOMEC	SOMAN	SOMAN	SOMAN	SOMAN	SOMAN
	End Office Switching Function, Per MOU					0.0011971										
	End Office Trunk Port - Shared, Per MOU					0.0002112										
	Tandem Switching (Port Usage) (Local or Access Tandem)															
	Tandem Switching Function Per MOU					0.000194										
	Tandem Trunk Port - Shared, Per MOU					0.0002416										
	Tandem Switching Function Per MOU (Melded)					0.000094381										
	Tandem Trunk Port - Shared, Per MOU (Melded)					.000117538										
	Melded Factor: 48.65% of the Tandem Rate															
	Common Transport															
	Common Transport - Per Mile, Per MOU					0.000003										
	Common Transport - Facilities Termination Per MOU					0.0007466										
UNBUNDLED PORT/LOOP COMBINATIONS - COST BASED RATES																
	>Cost Based Rates are applied where BellSouth is required by FCC and/or State Commission rule to provide Unbundled Local Switching or Switch Ports.															
	> The UNE-P Switching Port Rates Reflected in the Cost Based Section Apply to Embedded Base UNE-Ps as of March 10, 2005 and Consist of the TELRIC Cost Based Rates Plus $1.00 in Accordance with the TRRO.															
	>Features shall apply to the Unbundled Port/Loop Combination - Cost Based Rate section in the same manner as they are applied to the Stand-Alone Unbundled Port section of this Rate Exhibit.															
	>End Office and Tandem Switching Usage and Common Transport Usage rates in the Port section of this rate exhibit shall apply to all combinations of loop/port network elements except for UNE Coin Port/Loop Combinations.															
	>The first and additional Port nonrecurring charges apply to Not Currently Combined Combos. For Currently Combined Combos the nonrecurring charges shall be those identified in the Nonrecurring - Currently Combined sections.															
	2-WIRE VOICE GRADE LOOP WITH 2-WIRE LINE PORT (RES)															
	UNE Port/Loop Combination Rates															
	2-Wire VG Loop/Port Combo - Zone 1					11.79										
	2-Wire VG Loop/Port Combo - Zone 2					16.52										
	2-Wire VG Loop/Port Combo - Zone 3					32.74										
	UNE Loop Rates															
	2-Wire Voice Grade Loop (SL1) - Zone 1		1	UEPRX	UEPLX	9.64										
	2-Wire Voice Grade Loop (SL1) - Zone 2		2	UEPRX	UEPLX	14.37										
	2-Wire Voice Grade Loop (SL1) - Zone 3		3	UEPRX	UEPLX	30.59										
	2-Wire Voice Grade Line Port Rates (Res)															
	2-Wire voice unbundled port - residence			UEPRX	UEPRL	2.15	21.29	15.49	2.85	2.67						
	2-Wire voice unbundled port with Caller ID - res			UEPRX	UEPRC	2.15	21.29	15.49	2.85	2.67						
	2-Wire voice unbundled port outgoing only - res			UEPRX	UEPRO	2.15	21.29	15.49	2.85	2.67						
	2-Wire voice Grade unbundled Kentucky extended local dialing parity port with Caller ID - res			UEPRX	UEPRM	2.15	21.29	15.49	2.85	2.67						
	2-Wire voice unbundles res, low usage line port with Caller ID (LUM)			UEPRX	UEPAP	2.15	21.29	15.49	2.85	2.67						
	2-Wire Voice Unbundled Kentucky Residence Dialing Plan without Caller ID			UEPRX	UEPWE	2.15	21.29	15.49	2.85	2.67						
	2-Wire voice unbundled Low Usage Line Port without Caller ID Capability			UEPRX	UEPRT	2.15	21.29	15.49	2.85	2.67						
	FEATURES															
	All Features Offered			UEPRX	UEPVF	0.00	0.00	0.00								
	NONRECURRING CHARGES (NRCs) - CURRENTLY COMBINED															
	2-Wire Voice Grade Loop / Line Port Combination - Conversion - Switch-as-is			UEPRX	USAC2		0.10	0.10								
	2-Wire Voice Grade Loop / Line Port Combination - Conversion - Switch with change			UEPRX	USACC		0.10	0.10								
	2-Wire Voice Grade Loop / Line Port Platform - Installation Charge at QuickService location - Not Conversion of Existing Service			UEPRX	URECC		0.10									
	ADDITIONAL NRCs															
	2-Wire Voice Grade Loop/Line Port Combination - Subsequent Activity			UEPRX	USAS2	0.00	0.00	0.00								
	Unbundled Miscellaneous Rate Element, Tag Loop at End User Premise			UEPRX	URETL		8.33	0.83								
	OFF/ON PREMISES EXTENSION CHANNELS															
	2 Wire Analog Voice Grade Extension Loop – Non-Design		1	UEPRX	UEAEN	10.56	46.66	22.57	26.65	7.65						
	2 Wire Analog Voice Grade Extension Loop – Non-Design		2	UEPRX	UEAEN	15.34	46.66	22.57	26.65	7.65						
	2 Wire Analog Voice Grade Extension Loop – Non-Design		3	UEPRX	UEAEN	31.11	46.66	22.57	26.65	7.65						
	2 Wire Analog Voice Grade Extension Loop – Design		1	UEPRX	UEAED	12.67	134.89	81.87	73.65	14.88						
	2 Wire Analog Voice Grade Extension Loop – Design		2	UEPRX	UEAED	17.45	134.89	81.87	73.65	14.88						

UNBUNDLED NETWORK ELEMENTS - Kentucky

Attachment: 2 Ex. A

CATEGORY	RATE ELEMENTS	Interim	Zone	BCS	USOC	RATES ($)					Svc Order Submitted Elec per LSR	Svc Order Submitted Manually per LSR	Incremental Charge - Manual Svc Order vs. Electronic-1st	Incremental Charge - Manual Svc Order vs. Electronic-Add'l	Incremental Charge - Manual Svc Order vs. Electronic-Disc 1st	Incremental Charge - Manual Svc Order vs. Electronic-Disc Add'l
						Rec	Nonrecurring		Nonrecurring Disconnect		OSS Rates ($)					
							First	Add'l	First	Add'l	SOMEC	SOMAN	SOMAN	SOMAN	SOMAN	SOMAN
	2 Wire Analog Voice Grade Extension Loop – Design		3	UEPRX	UEAED	33.22	134.89	81.87	73.65	14.88						
	INTEROFFICE TRANSPORT															
	Interoffice Transport - Dedicated - 2 Wire Voice Grade - Facility Termination			UEPRX	U1TV2	23.95	98.09	53.67	56.31	22.42						
	Interoffice Transport - Dedicated - 2 Wire Voice Grade - Per Mile or Fraction Mile			UEPRX	U1TVM	0.0095	0.00	0.00								
	2-WIRE VOICE GRADE LOOP WITH 2-WIRE LINE PORT (BUS)															
	UNE Port/Loop Combination Rates															
	2-Wire VG Loop/Port Combo - Zone 1					11.79										
	2-Wire VG Loop/Port Combo - Zone 2					16.52										
	2-Wire VG Loop/Port Combo - Zone 3					32.74										
	UNE Loop Rates															
	2-Wire Voice Grade Loop (SL1) - Zone 1		1	UEPBX	UEPLX	9.64										
	2-Wire Voice Grade Loop (SL1) - Zone 2		2	UEPBX	UEPLX	14.37										
	2-Wire Voice Grade Loop (SL1) - Zone 3		3	UEPBX	UEPLX	30.59										
	2-Wire Voice Grade Line Port (Bus)															
	2-Wire voice unbundled port without Caller ID - bus			UEPBX	UEPBL	2.15	21.29	15.49	2.85	2.67						
	2-Wire voice unbundled port with Caller + E484 ID - bus			UEPBX	UEPBC	2.15	21.29	15.49	2.85	2.67						
	2-Wire voice unbundled port outgoing only - bus			UEPBX	UEPBO	2.15	21.29	15.49	2.85	2.67						
	2-Wire voice Grade unbundled Kentucky extended local dialing parity port with Caller ID - bus			UEPBX	UEPBM	2.15	21.29	15.49	2.85	2.67						
	2-Wire voice unbundled incoming only port with Caller ID - Bus			UEPBX	UEPB1	2.15	21.29	15.49	2.85	2.67						
	2-Wire Voice Unbundled Kentucky Business Dialing Plan without Caller ID			UEPBX	UEPWF	2.15	21.29	15.49	2.85	2.67						
	2-Wire voice unbundled Incoming Only Port without Caller ID Capability			UEPBX	UEPBE	2.15	21.29	15.49	2.85	2.67						
	FEATURES															
	All Features Offered			UEPBX	UEPVF	0.00	0.00	0.00								
	NONRECURRING CHARGES (NRCs) - CURRENTLY COMBINED															
	2-Wire Voice Grade Loop / Line Port Combination - Conversion - Switch-as-is			UEPBX	USAC2		0.10	0.10								
	2-Wire Voice Grade Loop / Line Port Combination - Conversion - Switch with change			UEPBX	USACC		0.10	0.10								
	ADDITIONAL NRCs															
	2-Wire Voice Grade Loop/Line Port Combination - Subsequent Activity			UEPBX	USAS2		0.00	0.00								
	Unbundled Miscellaneous Rate Element, Tag Loop at End User Premise			UEPBX	URETL		8.33	0.83								
	OFF/ON PREMISES EXTENSION CHANNELS															
	2 Wire Analog Voice Grade Extension Loop – Non-Design		1	UEPBX	UEAEN	10.56	46.66	22.57	26.65	7.65						
	2 Wire Analog Voice Grade Extension Loop – Non-Design		2	UEPBX	UEAEN	15.34	46.66	22.57	26.65	7.65						
	2 Wire Analog Voice Grade Extension Loop – Non-Design		3	UEPBX	UEAEN	31.11	46.66	22.57	26.65	7.65						
	2 Wire Analog Voice Grade Extension Loop – Design		1	UEPBX	UEAED	12.67	134.89	81.87	73.65	14.88						
	2 Wire Analog Voice Grade Extension Loop – Design		2	UEPBX	UEAED	17.45	134.89	81.87	73.65	14.88						
	2 Wire Analog Voice Grade Extension Loop – Design		3	UEPBX	UEAED	33.22	134.89	81.87	73.65	14.88						
	INTEROFFICE TRANSPORT															
	Interoffice Transport - Dedicated - 2 Wire Voice Grade - Facility Termination			UEPBX	U1TV2	23.95	98.09	53.67	56.31	22.42						
	Interoffice Transport - Dedicated - 2 Wire Voice Grade - Per Mile or Fraction Mile			UEPBX	U1TVM	0.0095	0.00	0.00								
	2-WIRE VOICE GRADE LOOP WITH 2-WIRE LINE PORT (RES - PBX)															
	UNE Port/Loop Combination Rates															
	2-Wire VG Loop/Port Combo - Zone 1					11.79										
	2-Wire VG Loop/Port Combo - Zone 2					16.52										
	2-Wire VG Loop/Port Combo - Zone 3					32.74										
	UNE Loop Rates															
	2-Wire Voice Grade Loop (SL 1) - Zone 1		1	UEPRG	UEPLX	9.64										
	2-Wire Voice Grade Loop (SL 1) - Zone 2		2	UEPRG	UEPLX	14.37										
	2-Wire Voice Grade Loop (SL 1) - Zone 3		3	UEPRG	UEPLX	30.59										
	2-Wire Voice Grade Line Port Rates (RES - PBX)															
	2-Wire VG Unbundled Combination 2-Way PBX Trunk Port - Res			UEPRG	UEPRD	2.15	21.29	15.49	2.85	2.67						
	FEATURES															
	All Features Offered			UEPRG	UEPVF	0.00	0.00	0.00								

UNBUNDLED NETWORK ELEMENTS - Kentucky

Attachment: 2 Ex. A

CATEGORY	RATE ELEMENTS	Interim	Zone	BCS	USOC	RATES ($)					Svc Order Submitted Elec per LSR	Svc Order Submitted Manually per LSR	Incremental Charge - Manual Svc Order vs. Electronic-1st	Incremental Charge - Manual Svc Order vs. Electronic-Add'l	Incremental Charge - Manual Svc Order vs. Electronic-Disc 1st	Incremental Charge - Manual Svc Order vs. Electronic-Disc Add'l
						Rec	Nonrecurring		Nonrecurring Disconnect		OSS Rates ($)					
							First	Add'l	First	Add'l	SOMEC	SOMAN	SOMAN	SOMAN	SOMAN	SOMAN
	NONRECURRING CHARGES (NRCs) - CURRENTLY COMBINED															
	2-Wire Voice Grade Loop/ Line Port Combination (PBX) - Conversion - Switch-As-Is			UEPRG	USAC2		8.45	1.91								
	2-Wire Voice Grade Loop/ Line Port Combination (PBX) - Conversion - Switch with Change			UEPRG	USACC		8.45	1.91								
	ADDITIONAL NRCs															
	2-Wire Voice Grade Loop/ Line Port Combination (PBX) - Subsequent Activity			UEPRG	USAS2	0.00	0.00	0.00								
	PBX Subsequent Activity - Change/Rearrange Multiline Hunt Group						7.86	7.86								
	Unbundled Miscellaneous Rate Element, Tag Loop at End User Premise			UEPRG	URETL		8.33	0.83								
	OFF/ON PREMISES EXTENSION CHANNELS															
	Local Channel Voice grade, per termination		1	UEPRG	P2JHX	12.67	134.89	81.87	73.65	14.88						
	Local Channel Voice grade, per termination		2	UEPRG	P2JHX	17.45	134.89	81.87	73.65	14.88						
	Local Channel Voice grade, per termination		3	UEPRG	P2JHX	33.22	134.89	81.87	73.65	14.88						
	Non-Wire Direct Serve Channel Voice Grade		1	UEPRG	SDD2X	12.68	170.06	78.10	119.62	15.80						
	Non-Wire Direct Serve Channel Voice Grade		2	UEPRG	SDD2X	18.12	170.06	78.10	119.62	15.80						
	Non-Wire Direct Serve Channel Voice Grade		3	UEPRG	SDD2X	29.64	170.06	78.10	119.62	15.00						
	INTEROFFICE TRANSPORT															
	Interoffice Transport - Dedicated - 2 Wire Voice Grade - Facility Termination			UEPRG	U1TV2	23.95	98.09	53.67	56.31	22.42						
	Interoffice Transport - Dedicated - 2 Wire Voice Grade - Per Mile or Fraction Mile			UEPRG	U1TVM	0.0095	0.00	0.00								
	2-WIRE VOICE GRADE LOOP WITH 2-WIRE LINE PORT (BUS - PBX)															
	UNE Port/Loop Combination Rates															
	2-Wire VG Loop/Port Combo - Zone 1					11.79										
	2-Wire VG Loop/Port Combo - Zone 2					16.52										
	2-Wire VG Loop/Port Combo - Zone 3					32.74										
	UNE Loop Rates															
	2-Wire Voice Grade Loop (SL 1) - Zone 1		1	UEPPX	UEPLX	9.64										
	2-Wire Voice Grade Loop (SL 1) - Zone 2		2	UEPPX	UEPLX	14.37										
	2-Wire Voice Grade Loop (SL 1) - Zone 3		3	UEPPX	UEPLX	30.59										
	2-Wire Voice Grade Line Port Rates (BUS - PBX)															
	Line Side Unbundled Combination 2-Way PBX Trunk Port - Bus			UEPPX	UEPPC	2.15	21.29	15.49	2.85	2.67						
	Line Side Unbundled Outward PBX Trunk Port - Bus			UEPPX	UEPPO	2.15	21.29	15.49	2.85	2.67						
	Line Side Unbundled Incoming PBX Trunk Port - Bus			UEPPX	UEPP1	2.15	21.29	15.49	2.85	2.67						
	2-Wire Voice Unbundled PBX LD Terminal Ports			UEPPX	UEPLD	2.15	21.29	15.49	2.85	2.67						
	2-Wire Voice Unbundled 2-Way Combination PBX Usage Port			UEPPX	UEPXA	2.15	21.29	15.49	2.85	2.67						
	2-Wire Voice Unbundled PBX Toll Terminal Hotel Ports			UEPPX	UEPXB	2.15	21.29	15.49	2.85	2.67						
	2-Wire Voice Unbundled PBX LD DDD Terminals Port			UEPPX	UEPXC	2.15	21.29	15.49	2.85	2.67						
	2-Wire Voice Unbundled PBX LD Terminal Switchboard Port			UEPPX	UEPXD	2.15	21.29	15.49	2.85	2.67						
	2-Wire Voice Unbundled PBX LD Terminal Switchboard IDD Capable Port			UEPPX	UEPXE	2.15	21.29	15.49	2.85	2.67						
	2-Wire Voice Unbundled 2-Way PBX Kentucky Room Area Calling Port without LUD			UEPPX	UEPXF	2.15	21.29	15.49	2.85	2.67						
	2-Wire Voice Unbundled PBX Kentucky LUD Area Calling Port			UEPPX	UEPXG	2.15	21.29	15.49	2.85	2.67						
	2-Wire Voice Unbundled PBX Kentucky Premium Calling Port			UEPPX	UEPXH	2.15	21.29	15.49	2.85	2.67						
	2-Wire Voice Unbundled 2-Way Kentucky Area Calling Port without LUD			UEPPX	UEPXJ	2.15	21.29	15.49	2.85	2.67						
	2-Wire Voice Unbundled OutDial Kentucky NAR Area Calling Port			UEPPX	UEPOK	2.15	21.29	15.49	2.85	2.67						
	2-Wire Voice Unbundled 2-Way PBX Hotel/Hospital Economy Administrative Calling Port			UEPPX	UEPXL	2.15	21.29	15.49	2.85	2.67						
	2-Wire Voice Unbundled 2-Way PBX Hotel/Hospital Economy Room Calling Port			UEPPX	UEPXM	2.15	21.29	15.49	2.85	2.67						
	2-Wire Voice Unbundled 1-Way Outgoing PBX Hotel/Hospital Discount Room Calling Port			UEPPX	UEPXO	2.15	21.29	15.49	2.85	2.67						
	2-Wire Voice Unbundled 1-Way Outgoing PBX Measured Port			UEPPX	UEPXS	2.15	21.29	15.49	2.85	2.67						
	FEATURES															
	All Features Offered			UEPPX	UEPVF	0.00	0.00	0.00								
	NONRECURRING CHARGES (NRCs) - CURRENTLY COMBINED															

UNBUNDLED NETWORK ELEMENTS - Kentucky

Attachment: 2 Ex. A

CATEGORY	RATE ELEMENTS	Interim	Zone	BCS	USOC	RATES ($)					Svc Order Submitted Elec per LSR	Svc Order Submitted Manually per LSR	Incremental Charge - Manual Svc Order vs. Electronic-1st	Incremental Charge - Manual Svc Order vs. Electronic-Add'l	Incremental Charge - Manual Svc Order vs. Electronic-Disc 1st	Incremental Charge - Manual Svc Order vs. Electronic-Disc Add'l
						Rec	Nonrecurring		Nonrecurring Disconnect		OSS Rates ($)					
							First	Add'l	First	Add'l	SOMEC	SOMAN	SOMAN	SOMAN	SOMAN	SOMAN
	2-Wire Voice Grade Loop/ Line Port Combination (PBX) - Conversion - Switch-As-Is			UEPPX	USAC2		8.45	1.91								
	2-Wire Voice Grade Loop/ Line Port Combination (PBX) - Conversion - Switch with Change			UEPPX	USACC		8.45	1.91								
ADDITIONAL NRCs																
	2-Wire Voice Grade Loop/ Line Port Combination (PBX) - Subsequent Activity			UEPPX	USAS2	0.00	0.00	0.00								
	PBX Subsequent Activity - Change/Rearrange Multiline Hunt Group						7.86	7.86								
	Unbundled Miscellaneous Rate Element, Tag Loop at End User Premise			UEPPX	URETL		8.33	0.83								
OFF/ON PREMISES EXTENSION CHANNELS																
	Local Channel Voice grade, per termination		1	UEPPX	P2JHX	12.67	134.89	81.87	73.65	14.88						
	Local Channel Voice grade, per termination		2	UEPPX	P2JHX	17.45	134.89	81.87	73.65	14.88						
	Local Channel Voice grade, per termination		3	UEPPX	P2JHX	33.22	134.89	81.87	73.65	14.88						
	Non-Wire Direct Serve Channel Voice Grade		1	UEPPX	SDD2X	12.68	170.06	78.10	119.62	15.80						
	Non-Wire Direct Serve Channel Voice Grade		2	UEPPX	SDD2X	18.12	170.06	78.10	119.62	15.80						
	Non-Wire Direct Serve Channel Voice Grade		3	UEPPX	SDD2X	29.64	170.06	78.10	119.62	15.00						
INTEROFFICE TRANSPORT																
	Interoffice Transport - Dedicated - 2 Wire Voice Grade - Facility Termination			UEPPX	U1TV2	23.95	98.09	53.67	56.31	22.42						
	Interoffice Transport - Dedicated - 2 Wire Voice Grade - Per Mile or Fraction Mile			UEPPX	U1TVM	0.0095	0.00	0.00								
2-WIRE VOICE GRADE LOOP WITH 2-WIRE ANALOG LINE COIN PORT																
UNE Port/Loop Combination Rates																
	2-Wire VG Coin Port/Loop Combo – Zone 1					11.79										
	2-Wire VG Coin Port/Loop Combo – Zone 2					16.52										
	2-Wire VG Coin Port/Loop Combo – Zone 3					32.74										
UNE Loop Rates																
	2-Wire Voice Grade Loop (SL1) - Zone 1		1	UEPCO	UEPLX	9.64										
	2-Wire Voice Grade Loop (SL1) - Zone 2		2	UEPCO	UEPLX	14.37										
	2-Wire Voice Grade Loop (SL1) - Zone 3		3	UEPCO	UEPLX	30.59										
2-Wire Voice Grade Line Ports (COIN)																
	2-Wire Coin 2-Way without Operator Screening and without Blocking (AL, KY, LA, MS)			UEPCO	UEPRF	2.15	21.29	15.49	2.85	2.67						
	2-Wire Coin 2-Way with Operator Screening (AL, KY)			UEPCO	UEPRE	2.15	21.29	15.49	2.85	2.67						
	2-Wire Coin 2-Way with Operator Screening and Blocking: 011, 900/976, 1+DDD (AL, KY, LA, MS)			UEPCO	UEPRA	2.15	21.29	15.49	2.85	2.67						
	2-Wire Coin 2-Way with Operator Screening and 011 Blocking (KY)			UEPCO	UEPKA	2.15	21.29	15.49	2.85	2.67						
	2-Wire Coin 2-Way with Operator Screening & Blocking: 900/976, 1+DDD, 011+, & Local (AL, KY, LA, MS)			UEPCO	UEPCD	2.15	21.29	15.49	2.85	2.67						
	2-Wire Coin Outward without Blocking and without Operator Screening (KY, LA, MS)			UEPCO	UEPRN	2.15	21.29	15.49	2.85	2.67						
	2-Wire Coin Outward with Operator Screening and 011 Blocking (GA, KY, MS)			UEPCO	UEPRJ	2.15	21.29	15.49	2.85	2.67						
	2-Wire Coin Outward with Operator Screening and Blocking: 011, 900/976, 1+DDD (AL, KY, LA, MS)			UEPCO	UEPRH	2.15	21.29	15.49	2.85	2.67						
	2-Wire Coin Outward Operator Screening & Blocking: 900/976, 1+DDD, 011+, and Local (AL, KY, LA, MS)			UEPCO	UEPCN	2.15	21.29	15.49	2.85	2.67						
	2-Wire 2-Way Smartline with 900/976 (all states except LA)			UEPCO	UEPCK	2.15	21.29	15.49	2.85	2.67						
	2-Wire Coin Outward Smartline with 900/976 (all states except LA)			UEPCO	UEPCR	2.15	21.29	15.49	2.85	2.67						
ADDITIONAL UNE COIN PORT/LOOP (RC)																
	UNE Coin Port/Loop Combo Usage (Flat Rate)			UEPCO	URECU	2.57	0.00	0.00	0.00	0.00						
NONRECURRING CHARGES - CURRENTLY COMBINED																
	2-Wire Voice Grade Loop / Line Port Combination - Conversion - Switch-as-is			UEPCO	USAC2		0.10	0.10								
	2-Wire Voice Grade Loop / Line Port Combination - Conversion - Switch with change			UEPCO	USACC		0.10	0.10								
ADDITIONAL NRCs																
	2-Wire Voice Grade Loop/Line Port Combination - Subsequent Activity			UEPCO	USAS2		0.00	0.00								

UNBUNDLED NETWORK ELEMENTS - Kentucky

Attachment: 2 Ex. A

CATEGORY	RATE ELEMENTS	Interim	Zone	BCS	USOC	RATES ($)					Svc Order Submitted Elec per LSR	Svc Order Submitted Manually per LSR	Incremental Charge - Manual Svc Order vs. Electronic-1st	Incremental Charge - Manual Svc Order vs. Electronic-Add'l	Incremental Charge - Manual Svc Order vs. Electronic-Disc 1st	Incremental Charge - Manual Svc Order vs. Electronic-Disc Add'l
						Rec	Nonrecurring		Nonrecurring Disconnect		OSS Rates ($)					
							First	Add'l	First	Add'l	SOMEC	SOMAN	SOMAN	SOMAN	SOMAN	SOMAN
	Unbundled Miscellaneous Rate Element, Tag Loop at End User Premise			UEPCO	URETL		8.33	0.83								
	2-WIRE VOICE LOOP/ 2WIRE VOICE GRADE IO TRANSPORT/ 2-WIRE LINE PORT (RES)															
	UNE Port/Loop Combination Rates															
	2-Wire VG Loop/IO Tranport/Port Combo - Zone 1					14.90										
	2-Wire VG Loop/IO Tranport/Port Combo - Zone 2					19.68										
	2-Wire VG Loop/IO Tranport/Port Combo - Zone 3					35.45										
	UNE Loop Rates															
	2-Wire Voice Grade Loop (SL2) - Zone 1		1	UEPFR	UECF2	12.67										
	2-Wire Voice Grade Loop (SL2) - Zone 2		2	UEPFR	UECF2	17.45										
	2-Wire Voice Grade Loop (SL2) - Zone 3		3	UEPFR	UECF2	33.22										
	2-Wire Voice Grade Line Port Rates (Res)															
	2-Wire voice unbundled port - residence			UEPFR	UEPRL	2.23	128.96	64.11	61.92	9.97						
	2-Wire voice unbundled port with Caller ID - res			UEPFR	UEPRC	2.23	128.96	64.11	61.92	9.97						
	2-Wire voice unbundled port outgoing only - res			UEPFR	UEPRO	2.23	128.96	64.11	61.92	9.97						
	2-Wire voice Grade unbundled Kentucky extended local dialing parity port with Caller ID - res			UEPFR	UEPRM	2.23	128.96	64.11	61.92	9.97						
	2-Wire voice unbundles res, low usage line port with Caller ID (LUM)			UEPFR	UEPAP	2.23	128.96	64.11	61.92	9.97						
	2-Wire Voice Unbundled Kentucky Residence Dialing Plan without Caller ID			UEPFR	UEPWE	2.23	128.96	64.11	61.92	9.97						
	INTEROFFICE TRANSPORT															
	Interoffice Transport - Dedicated - 2 Wire Voice Grade - Facility Termination			UEPFR	U1TV2	23.95	98.09	53.67	56.31	22.42						
	Interoffice Transport - Dedicated - 2 Wire Voice Grade - Per Mile or Fraction Mile			UEPFR	1L5XX	0.0095										
	FEATURES															
	All Features Offered			UEPFR	UEPVF	0.00	0.00	0.00								
	NONRECURRING CHARGES (NRCs) - CURRENTLY COMBINED															
	2-Wire Loop / Dedicated IO Transport / 2 Wire Line Port Combination - Conversion - Switch-as-is			UEPFR	USAC2		9.03	1.87								
	2-Wire Loop / Dedicated IO Transport / 2 Wire Line Port Combination - Conversion - Switch-With-Change			UEPFR	USACC		9.03	1.87								
	Unbundled Miscellaneous Rate Element, Tag Designed Loop at End User Premise			UEPFR	URETN		11.21	1.10								
	2-WIRE VOICE LOOP/ 2WIRE VOICE GRADE IO TRANSPORT/ 2-WIRE LINE PORT (BUS)															
	UNE Port/Loop Combination Rates															
	2-Wire VG Loop/IO Tranport/Port Combo - Zone 1					14.90										
	2-Wire VG Loop/IO Tranport/Port Combo - Zone 2					19.68										
	2-Wire VG Loop/IO Tranport/Port Combo - Zone 3					35.45										
	UNE Loop Rates															
	2-Wire Voice Grade Loop (SL2) - Zone 1		1	UEPFB	UECF2	12.67										
	2-Wire Voice Grade Loop (SL2) - Zone 2		2	UEPFB	UECF2	17.45										
	2-Wire Voice Grade Loop (SL2) - Zone 3		3	UEPFB	UECF2	33.22										
	2-Wire Voice Grade Line Port (Bus)															
	2-Wire voice unbundled port without Caller ID - bus			UEPFB	UEPBL	2.23	128.96	64.11	61.92	9.97						
	2-Wire voice unbundled port with Caller + E484 ID - bus			UEPFB	UEPBC	2.23	128.96	64.11	61.92	9.97						
	2-Wire voice unbundled port outgoing only - bus			UEPFB	UEPBO	2.23	128.96	64.11	61.92	9.97						
	2-Wire voice Grade unbundled Kentucky extended local dialing parity port with Caller ID - bus			UEPFB	UEPBM	2.23	128.96	64.11	61.92	9.97						
	2-Wire voice unbundled incoming only port with Caller ID - Bus			UEPFB	UEPB1	2.23	128.96	64.11	61.92	9.97						
	2-Wire Voice Unbundled Kentucky Business Dialing Plan without Caller ID			UEPFB	UEPWF	2.23	128.96	64.11	61.92	9.97						
	INTEROFFICE TRANSPORT															
	Interoffice Transport - Dedicated - 2 Wire Voice Grade - Facility Termination			UEPFB	U1TV2	23.95	98.09	53.67	56.31	22.42						
	Interoffice Transport - Dedicated - 2 Wire Voice Grade - Per Mile or Fraction Mile			UEPFB	1L5XX	0.0095										
	FEATURES															
	All Features Offered			UEPFB	UEPVF	0.00	0.00	0.00								
	NONRECURRING CHARGES (NRCs) - CURRENTLY COMBINED															
	2-Wire Loop / Dedicated IO Transport / 2 Wire Line Port Combination - Conversion - Switch-as-is			UEPFB	USAC2		9.03	1.87								

UNBUNDLED NETWORK ELEMENTS - Kentucky

Attachment: 2 Ex. A

CATEGORY	RATE ELEMENTS	Interim	Zone	BCS	USOC	RATES ($)					Svc Order Submitted Elec per LSR	Svc Order Submitted Manually per LSR	Incremental Charge - Manual Svc Order vs. Electronic-1st	Incremental Charge - Manual Svc Order vs. Electronic-Add'l	Incremental Charge - Manual Svc Order vs. Electronic-Disc 1st	Incremental Charge - Manual Svc Order vs. Electronic-Disc Add'l
						Rec	Nonrecurring		Nonrecurring Disconnect		OSS Rates ($)					
							First	Add'l	First	Add'l	SOMEC	SOMAN	SOMAN	SOMAN	SOMAN	SOMAN
	2-Wire Loop / Dedicated IO Transport / 2 Wire Line Port Combination - Conversion - Switch with change			UEPFB	USACC		9.03	1.87								
	Unbundled Miscellaneous Rate Element, Tag Designed Loop at End User Premise			UEPFB	URETN		11.21	1.10								
2-WIRE VOICE LOOP/ 2WIRE VOICE GRADE IO TRANSPORT/ 2-WIRE LINE PORT (PBX)																
UNE Port/Loop Combination Rates																
	2-Wire VG Loop/IO Tranport/Port Combo - Zone 1					14.90										
	2-Wire VG Loop/IO Tranport/Port Combo - Zone 2					19.68										
	2-Wire VG Loop/IO Tranport/Port Combo - Zone 3					35.45										
UNE Loop Rates																
	2-Wire Voice Grade Loop (SL2) - Zone 1		1	UEPFP	UECF2	12.67										
	2-Wire Voice Grade Loop (SL2) - Zone 2		2	UEPFP	UECF2	17.45										
	2-Wire Voice Grade Loop (SL2) - Zone 3		3	UEPFP	UECF2	33.22										
2-Wire Voice Grade Line Port Rates (BUS - PBX)																
	Line Side Unbundled Combination 2-Way PBX Trunk Port - Bus			UEPFP	UEPPC	2.23	164.27	78.65	75.05	8.73						
	Line Side Unbundled Outward PBX Trunk Port - Bus			UEPFP	UEPPO	2.23	164.27	78.65	75.05	8.73						
	Line Side Unbundled Incoming PBX Trunk Port - Bus			UEPFP	UEPP1	2.23	164.27	78.65	75.05	8.73						
	2-Wire Voice Unbundled PBX LD Terminal Ports			UEPFP	UEPLD	2.23	164.27	78.65	75.05	8.73						
	2-Wire Voice Unbundled 2-Way Combination PBX Usage Port			UEPFP	UEPXA	2.23	164.27	78.65	75.05	8.73						
	2-Wire Voice Unbundled PBX Toll Terminal Hotel Ports			UEPFP	UEPXB	2.23	164.27	78.65	75.05	8.73						
	2-Wire Voice Unbundled PBX LD DDD Terminals Port			UEPFP	UEPXC	2.23	164.27	78.65	75.05	8.73						
	2-Wire Voice Unbundled PBX LD Terminal Switchboard Port			UEPFP	UEPXD	2.23	164.27	78.65	75.05	8.73						
	2-Wire Voice Unbundled PBX LD Terminal Switchboard IDD Capable Port			UEPFP	UEPXE	2.23	164.27	78.65	75.05	8.73						
	2-Wire Voice Unbundled 2-Way PBX Kentucky Room Area Calling Port without LUD			UEPFP	UEPXF	2.23	164.27	78.65	75.05	8.73						
	2-Wire Voice Unbundled PBX Kentucky LUD Area Calling Port			UEPFP	UEPXG	2.23	164.27	78.65	75.05	8.73						
	2-Wire Voice Unbundled PBX Kentucky Premium Calling Port			UEPFP	UEPXH	2.23	164.27	78.65	75.05	8.73						
	2-Wire Voice Unbundled 2-Way Kentucky Area Calling Port without LUD			UEPFP	UEPXJ	2.23	164.27	78.65	75.05	8.73						
	2-Wire Voice Unbundled 2-Way PBX Hotel/Hospital Economy Administrative Calling Port			UEPFP	UEPXL	2.23	164.27	78.65	75.05	8.73						
	2-Wire Voice Unbundled 2-Way PBX Hotel/Hospital Economy Room Calling Port			UEPFP	UEPXM	2.23	164.27	78.65	75.05	8.73						
	2-Wire Voice Unbundled 1-Way Outgoing PBX Hotel/Hospital Discount Room Calling Port			UEPFP	UEPXO	2.23	164.27	78.65	75.05	8.73						
	2-Wire Voice Unbundled 1-Way Outgoing PBX Measured Port			UEPFP	UEPXS	2.23	164.27	78.65	75.05	8.73						
INTEROFFICE TRANSPORT																
	Interoffice Transport - Dedicated - 2 Wire Voice Grade - Facility Termination			UEPFP	U1TV2	23.95	98.09	53.67	56.31	22.42						
	Interoffice Transport - Dedicated - 2 Wire Voice Grade - Per Mile or Fraction Mile			UEPFP	1L5XX	0.0095										
FEATURES																
	All Features Offered			UEPFP	UEPVF	0.00	0.00	0.00								
NONRECURRING CHARGES (NRCs) - CURRENTLY COMBINED																
	2-Wire Loop / Dedicated IO Transport / 2 Wire Line Port Combination - Conversion - Switch-as-is			UEPFP	USAC2		9.03	1.87								
	2-Wire Loop / Dedicated IO Transport / 2 Wire Line Port Combination - Conversion - Switch with change			UEPFP	USACC		9.03	1.87								
	Unbundled Miscellaneous Rate Element, Tag Designed Loop at End User Premise			UEPFP	URETN		11.21	1.10								
2-WIRE VOICE GRADE LOOP- BUS ONLY - WITH 2-WIRE DID TRUNK PORT																
UNE Port/Loop Combination Rates																
	2-Wire VG Loop/2-Wire DID Trunk Port Combo - UNE Zone 1					22.30										
	2-Wire VG Loop/2-Wire DID Trunk Port Combo - UNE Zone 2					27.08										
	2-Wire VG Loop/2-Wire DID Trunk Port Combo - UNE Zone 3					42.85										
UNE Loop Rates																
	2-Wire Analog Voice Grade Loop - (SL2) - UNE Zone 1		1	UEPPX	UECD1	12.67										
	2-Wire Analog Voice Grade Loop - (SL2) - UNE Zone 2		2	UEPPX	UECD1	17.45										
	2-Wire Analog Voice Grade Loop - (SL2) - UNE Zone 3		3	UEPPX	UECD1	33.22										
UNE Port Rate																
	Exchange Ports - 2-Wire DID Port			UEPPX	UEPD1	9.63	336.11	27.75	132.37	9.31						
NONRECURRING CHARGES - CURRENTLY COMBINED																

UNBUNDLED NETWORK ELEMENTS - Kentucky

Attachment: 2 Ex. A

CATEGORY	RATE ELEMENTS	Interim	Zone	BCS	USOC	RATES ($) Rec	Nonrecurring First	Nonrecurring Add'l	Nonrecurring Disconnect First	Nonrecurring Disconnect Add'l	Svc Order Submitted Elec per LSR (OSS Rates ($)) SOMEC	Svc Order Submitted Manually per LSR (OSS Rates ($)) SOMAN	Incremental Charge - Manual Svc Order vs. Electronic- 1st (OSS Rates ($)) SOMAN	Incremental Charge - Manual Svc Order vs. Electronic- Add'l (OSS Rates ($)) SOMAN	Incremental Charge - Manual Svc Order vs. Electronic- Disc 1st (OSS Rates ($)) SOMAN	Incremental Charge - Manual Svc Order vs. Electronic- Disc Add'l (OSS Rates ($)) SOMAN
	2-Wire Voice Grade Loop / 2-Wire DID Trunk Port Conversion with BellSouth Allowable Changes			UEPPX	USA1C		7.85	1.87								
ADDITIONAL NRCs																
	2-Wire DID Subsequent Activity - Add Trunks, Per Trunk			UEPPX	USAS1		32.25	32.25								
	Unbundled Miscellaneous Rate Element, Tag Designed Loop at End User Premise			UEPPX	URETN		11.21	1.10								
Telephone Number/Trunk Group Establisment Charges																
	DID Trunk Termination (One Per Port)			UEPPX	NDT	0.00	0.00	0.00								
	Additional DID Numbers for each Group of 20 DID Numbers			UEPPX	ND4	0.00	0.00	0.00								
	DID Numbers, Non- consecutive DID Numbers , Per Number			UEPPX	ND5	0.00	0.00	0.00								
	Reserve Non-Consecutive DID numbers			UEPPX	ND6	0.00	0.00	0.00								
	Reserve DID Numbers			UEPPX	NDV	0.00	0.00	0.00								
2-WIRE ISDN DIGITAL GRADE LOOP WITH 2-WIRE ISDN DIGITAL LINE SIDE PORT																
UNE Port/Loop Combination Rates																
	2W ISDN Digital Grade Loop/2W ISDN Digital Line Side Port - UNE Zone 1					26.69										
	2W ISDN Digital Grade Loop/2W ISDN Digital Line Side Port - UNE Zone 2					32.92										
	2W ISDN Digital Grade Loop/2W ISDN Digital Line Side Port - UNE Zone 3					51.21										
UNE Loop Rates																
	2-Wire ISDN Digital Grade Loop - UNE Zone 1		1	UEPPB UEPPR	USL2X	16.10										
	2-Wire ISDN Digital Grade Loop - UNE Zone 2		2	UEPPB UEPPR	USL2X	22.33										
	2-Wire ISDN Digital Grade Loop - UNE Zone 3		3	UEPPB UEPPR	USL2X	40.63										
UNE Port Rate																
	Exchange Port - 2-Wire ISDN Line Side Port			UEPPR	UEPPR	10.59	320.53	289.13	92.19	17.56						
	Exchange Port - 2-Wire ISDN Line Side Port			UEPPB	UEPPB	10.59	320.53	289.13	92.19	17.56						
NONRECURRING CHARGES - CURRENTLY COMBINED																
	2-Wire ISDN Digital Grade Loop / 2-Wire ISDN Line Side Port Combination - Conversion			UEPPB UEPPR	USACB	0.00	22.77	17.00								
ADDITIONAL NRCs																
	Unbundled Miscellaneous Rate Element, Tag Designed Loop at End User Premise			UEPPB UEPPR	URETN		11.21	1.10								
	Unbundled Miscellaneous Rate Element, Tag Loop at End User Premise			UEPPB UEPPR	URETL		8.33	0.83								
B-CHANNEL USER PROFILE ACCESS:																
	CVS/CSD (DMS/5ESS)			UEPPB UEPPR	U1UCA	0.00	0.00	0.00								
	CVS (EWSD)			UEPPB UEPPR	U1UCB	0.00	0.00	0.00								
	CSD			UEPPB UEPPR	U1UCC	0.00	0.00	0.00								
B-CHANNEL AREA PLUS USER PROFILE ACCESS: (AL,KY,LA,MS SC,MS, & TN)																
	CVS/CSD (DMS/5ESS)			UEPPB UEPPR	U1UCD	0.00	0.00	0.00								
	CVS (EWSD)			UEPPB UEPPR	U1UCE	0.00	0.00	0.00								
	CSD			UEPPB UEPPR	U1UCF	0.00	0.00	0.00								
USER TERMINAL PROFILE																
	User Terminal Profile (EWSD only)			UEPPB UEPPR	U1UMA	0.00	0.00	0.00								
VERTICAL FEATURES																
	All Vertical Features - One per Channel B User Profile			UEPPB UEPPR	UEPVF	0.00	0.00	0.00								
INTEROFFICE CHANNEL MILEAGE																
	Interoffice Channel mileage each, including first mile and facilities termination			UEPPB UEPPR	M1GNC	29.12	47.34	31.78	22.77	8.75						
	Interoffice Channel mileage each, additional mile			UEPPB UEPPR	M1GNM	0.01	0.00	0.00								
UNBUNDLED CENTREX PORT/LOOP COMBINATIONS - COST BASED RATES																
UNE-P CENTREX - 1AESS - (Valid in AL,FL,GA,KY,LA,MS,&TN only)																
2-Wire VG Loop/2-Wire Voice Grade Port (Centrex) Combo																
UNE Port/Loop Combination Rates (Non-Design)																
	2-Wire VG Loop/2-Wire Voice Grade Port (Centrex) Port Combo - Non-Design					11.79										
	2-Wire VG Loop/2-Wire Voice Grade Port (Centrex)Port Combo - Non-Design					16.52										
	2-Wire VG Loop/2-Wire Voice Grade Port (Centrex)Port Combo - Non-Design					32.74										
UNE Port/Loop Combination Rates (Design)																

UNBUNDLED NETWORK ELEMENTS - Kentucky

Attachment: 2 Ex. A

CATEGORY	RATE ELEMENTS	Interim	Zone	BCS	USOC	RATES ($)					Svc Order Submitted Elec per LSR	Svc Order Submitted Manually per LSR	Incremental Charge - Manual Svc Order vs. Electronic-1st	Incremental Charge - Manual Svc Order vs. Electronic-Add'l	Incremental Charge - Manual Svc Order vs. Electronic-Disc 1st	Incremental Charge - Manual Svc Order vs. Electronic-Disc Add'l
						Rec	Nonrecurring		Nonrecurring Disconnect		OSS Rates ($)					
							First	Add'l	First	Add'l	SOMEC	SOMAN	SOMAN	SOMAN	SOMAN	SOMAN
	2-Wire VG Loop/2-Wire Voice Grade Port (Centrex) Port Combo - Design					14.82										
	2-Wire VG Loop/2-Wire Voice Grade Port (Centrex)Port Combo - Design					19.60										
	2-Wire VG Loop/2-Wire Voice Grade Port (Centrex)Port Combo - Design					35.37										
UNE Loop Rate																
	2-Wire Voice Grade Loop (SL 1) - Zone 1		1	UEP91	UECS1	9.64										
	2-Wire Voice Grade Loop (SL 1) - Zone 2		2	UEP91	UECS1	14.37										
	2-Wire Voice Grade Loop (SL 1) - Zone 3		3	UEP91	UECS1	30.59										
	2-Wire Voice Grade Loop (SL 2) - Zone 1		1	UEP91	UECS2	12.67										
	2-Wire Voice Grade Loop (SL 2) - Zone 2		2	UEP91	UECS2	17.45										
	2-Wire Voice Grade Loop (SL 2) - Zone 3		3	UEP91	UECS2	33.22										
UNE Ports																
All States (Except North Carolina and Sout Carolina)																
	2-Wire Voice Grade Port (Centrex) Basic Local Area			UEP91	UEPYA	2.15	21.29	15.49	2.85	2.67						
	2-Wire Voice Grade Port (Centrex 800 termination)Basic Local Area			UEP91	UEPYB	2.15	21.29	15.49	2.85	2.67						
	2-Wire Voice Grade Port (Centrex with Caller ID)Note1 Basic Local Area			UEP91	UEPYH	2.15	21.29	15.49	2.85	2.67						
	2-Wire Voice Grade Port (Centrex from diff Serving Wire Center) Note 2, 3 Basic Local Area			UEP91	UEPYM	2.15	21.29	15.49	2.85	2.67						
	2-Wire Voice Grade Port, Diff Serving Wire Center - 800 Service Term - Basic Local Area			UEP91	UEPYZ	2.15	21.29	15.49	2.85	2.67						
	2-Wire Voice Grade Port terminated in on Megalink or equivalent - Basic Local Area			UEP91	UEPY9	2.15	21.29	15.49	2.85	2.67						
	2-Wire Voice Grade Port Terminated on 800 Service Term - Basic Local Area			UEP91	UEPY2	2.15	21.29	15.49	2.85	2.67						
AL, KY, LA, MS, & TN Only																
	2-Wire Voice Grade Port (Centrex)			UEP91	UEPQA	2.15	21.29	15.49	2.85	2.67						
	2-Wire Voice Grade Port (Centrex 800 termination)			UEP91	UEPQB	2.15	21.29	15.49	2.85	2.67						
	2-Wire Voice Grade Port (Centrex with Caller ID)1			UEP91	UEPQH	2.15	21.29	15.49	2.85	2.67						
	2-Wire Voice Grade Port (Centrex from diff Serving Wire Center)2,3			UEP91	UEPQM	2.15	21.29	15.49	2.85	2.67						
	2-Wire Voice Grade Port, Diff Serving Wire Center - 2,3 - 800 Service Term			UEP91	UEPQZ	2.15	21.29	15.49	2.85	2.67						
	2-Wire Voice Grade Port terminated in on Megalink or equivalent			UEP91	UEPQ9	2.15	21.29	15.49	2.85	2.67						
	2-Wire Voice Grade Port Terminated on 800 Service Term			UEP91	UEPQ2	2.15	21.29	15.49	2.85	2.67						
Local Switching																
	Centrex Intercom Funtionality, per port			UEP91	URECS	0.8873										
Features																
	All Standard Features Offered, per port			UEP91	UEPVF	0.00										
	All Select Features Offered, per port			UEP91	UEPVS	0.00	405.66									
	All Centrex Control Features Offered, per port			UEP91	UEPVC	0.00										
NARS																
	Unbundled Network Access Register - Combination			UEP91	UARCX	0.00	0.00	0.00	0.00	0.00						
	Unbundled Network Access Register - Indial			UEP91	UAR1X	0.00	0.00	0.00	0.00	0.00						
	Unbundled Network Access Register - Outdial			UEP91	UAROX	0.00	0.00	0.00	0.00	0.00						
Miscellaneous Terminations																
2-Wire Trunk Side																
	Trunk Side Terminations, each			UEP91	CENA6	10.51	92.18	15.82	52.16	5.30						
Interoffice Channel Mileage - 2-Wire																
	Interoffice Channel Facilities Termination - Voice Grade			UEP91	M1GBC	29.11										
	Interoffice Channel mileage, per mile or fraction of mile			UEP91	M1GBM	0.01										
Feature Activations (DS0) Centrex Loops on Channelized DS1 Service																
D4 Channel Bank Feature Activations																
	Feature Activation on D-4 Channel Bank Centrex Loop Slot			UEP91	1PQWS	0.62										
	Feature Activation on D-4 Channel Bank FX line Side Loop Slot			UEP91	1PQW6	0.62										
	Feature Activation on D-4 Channel Bank FX Trunk Side Loop Slot			UEP91	1PQW7	0.62										
	Feature Activation on D-4 Channel Bank Centrex Loop Slot - Different Wire Center			UEP91	1PQWP	0.62										

UNBUNDLED NETWORK ELEMENTS - Kentucky

Attachment: 2 Ex. A

CATEGORY	RATE ELEMENTS	Interim	Zone	BCS	USOC	RATES ($)					Svc Order Submitted Elec per LSR	Svc Order Submitted Manually per LSR	Incremental Charge - Manual Svc Order vs. Electronic-1st	Incremental Charge - Manual Svc Order vs. Electronic-Add'l	Incremental Charge - Manual Svc Order vs. Electronic-Disc 1st	Incremental Charge - Manual Svc Order vs. Electronic-Disc Add'l
						Rec	Nonrecurring		Nonrecurring Disconnect		OSS Rates ($)					
							First	Add'l	First	Add'l	SOMEC	SOMAN	SOMAN	SOMAN	SOMAN	SOMAN
	Feature Activation on D-4 Channel Bank Private Line Loop Slot			UEP91	1PQWV	0.62										
	Feature Activation on D-4 Channel Bank Tjie Line/Trunk Loop Slot			UEP91	1PQWQ	0.62										
	Feature Activation on D-4 Channel Bank WATS Loop Slot			UEP91	1PQWA	0.62										
Non-Recurring Charges (NRC) Associated with UNE-P Centrex																
	Conversion - Currently Combined Switch-As-Is with allowed changes, per port			UEP91	USAC2		0.102	0.102								
	Conversion of Existing Centrex Common Block			UEP91	USACN		18.95	8.32								
	New Centrex Standard Common Block			UEP91	M1ACS	0.00	669.80	78.32	111.05	13.27						
	New Centrex Customized Common Block			UEP91	M1ACC	0.00	669.80	78.32	111.05	13.27						
	Secondary Block, per Block			UEP91	M2CC1	0.00	78.32	78.32	13.27	13.27						
	NAR Establishment Charge, Per Occasion			UEP91	URECA	0.00	72.75									
Additional Non-Recurring Charges (NRC)																
	Unbundled Miscellaneous Rate Element, Tag Loop at End Use Premise			UEP91	URETL		8.33	0.83								
	Unbundled Miscellaneous Rate Element, Tag Design Loop at End Use Premise			UEP91	URETN		11.21	1.10								
UNE-P CENTREX - 5ESS (Valid in All States)																
2-Wire VG Loop/2-Wire Voice Grade Port (Centrex) Combo																
UNE Port/Loop Combination Rates (Non-Design)																
	2-Wire VG Loop/2-Wire Voice Grade Port (Centrex) Port Combo - Non-Design					11.79										
	2-Wire VG Loop/2-Wire Voice Grade Port (Centrex)Port Combo - Non-Design					16.52										
	2-Wire VG Loop/2-Wire Voice Grade Port (Centrex)Port Combo - Non-Design					32.74										
UNE Port/Loop Combination Rates (Design)																
	2-Wire VG Loop/2-Wire Voice Grade Port (Centrex) Port Combo - Design					14.82										
	2-Wire VG Loop/2-Wire Voice Grade Port (Centrex)Port Combo - Design					19.60										
	2-Wire VG Loop/2-Wire Voice Grade Port (Centrex)Port Combo - Design					35.37										
UNE Loop Rate																
	2-Wire Voice Grade Loop (SL 1) - Zone 1		1	UEP95	UECS1	9.64										
	2-Wire Voice Grade Loop (SL 1) - Zone 2		2	UEP95	UECS1	14.37										
	2-Wire Voice Grade Loop (SL 1) - Zone 3		3	UEP95	UECS1	30.59										
	2-Wire Voice Grade Loop (SL 2) - Zone 1		1	UEP95	UECS2	12.67										
	2-Wire Voice Grade Loop (SL 2) - Zone 2		2	UEP95	UECS2	17.45										
	2-Wire Voice Grade Loop (SL 2) - Zone 3		3	UEP95	UECS2	33.22										
UNE Port Rate																
All States																
	2-Wire Voice Grade Port (Centrex) Basic Local Area			UEP95	UEPYA	2.15	21.29	15.49	2.85	2.67						
	2-Wire Voice Grade Port (Centrex 800 termination)			UEP95	UEPYB	2.15	21.29	15.49	2.85	2.67						
	2-Wire Voice Grade Port (Centrex with Caller ID)1Basic Local Area			UEP95	UEPYH	2.15	21.29	15.49	2.85	2.67						
	2-Wire Voice Grade Port (Centrex from diff Serving Wire Center)2,3 Basic Local Area			UEP95	UEPYM	2.15	21.29	15.49	2.85	2.67						
	2-Wire Voice Grade Port, Diff Serving Wire Center 2,3 - 800 Service Term - Basic Local Area			UEP95	UEPYZ	2.15	21.29	15.49	2.85	2.67						
	2-Wire Voice Grade Port terminated in on Megalink or equivalent - Basic Local Area			UEP95	UEPY9	2.15	21.29	15.49	2.85	2.67						
	2-Wire Voice Grade Port Terminated on 800 Service Term - Basic Local Area			UEP95	UEPY2	2.15	21.29	15.49	2.85	2.67						
AL, KY, LA, MS, SC, & TN Only																
	2-Wire Voice Grade Port (Centrex)			UEP95	UEPQA	2.15	21.29	15.49	2.85	2.67						
	2-Wire Voice Grade Port (Centrex 800 termination)			UEP95	UEPQB	2.15	21.29	15.49	2.85	2.67						
	2-Wire Voice Grade Port (Centrex with Caller ID)1			UEP95	UEPQH	2.15	21.29	15.49	2.85	2.67						
	2-Wire Voice Grade Port (Centrex from diff Serving Wire Center)2,3			UEP95	UEPQM	2.15	21.29	15.49	2.85	2.67						
	2-Wire Voice Grade Port, Diff Serving Wire Center - 800 Service Term 2,3			UEP95	UEPQZ	2.15	21.29	15.49	2.85	2.67						

UNBUNDLED NETWORK ELEMENTS - Kentucky

Attachment: 2 Ex. A

CATEGORY	RATE ELEMENTS	Interim	Zone	BCS	USOC	RATES ($)					Svc Order Submitted Elec per LSR	Svc Order Submitted Manually per LSR	Incremental Charge - Manual Svc Order vs. Electronic-1st	Incremental Charge - Manual Svc Order vs. Electronic-Add'l	Incremental Charge - Manual Svc Order vs. Electronic-Disc 1st	Incremental Charge - Manual Svc Order vs. Electronic-Disc Add'l
						Rec	Nonrecurring		Nonrecurring Disconnect		OSS Rates ($)					
							First	Add'l	First	Add'l	SOMEC	SOMAN	SOMAN	SOMAN	SOMAN	SOMAN
	2-Wire Voice Grade Port terminated in on Megalink or equivalent			UEP95	UEPQ9	2.15	21.29	15.49	2.85	2.67						
	2-Wire Voice Grade Port Terminated on 800 Service Term			UEP95	UEPQ2	2.15	21.29	15.49	2.85	2.67						
Local Switching																
	Centrex Intercom Funtionality, per port			UEP95	URECS	0.8873										
Features																
	All Standard Features Offered, per port			UEP95	UEPVF	0.00										
	All Select Features Offered, per port			UEP95	UEPVS	0.00	405.66									
	All Centrex Control Features Offered, per port			UEP95	UEPVC	0.00										
NARS																
	Unbundled Network Access Register - Combination			UEP95	UARCX	0.00	0.00	0.00	0.00	0.00						
	Unbundled Network Access Register - Indial			UEP95	UAR1X	0.00	0.00	0.00	0.00	0.00						
	Unbundled Network Access Register - Outdial			UEP95	UAROX	0.00	0.00	0.00	0.00	0.00						
Miscellaneous Terminations																
2-Wire Trunk Side																
	Trunk Side Terminations, each			UEP95	CEND6	10.51	92.18	15.82	52.16	5.30						
4-Wire Digital (1.544 Megabits)																
	DS1 Circuit Terminations, each			UEP95	M1HD1	74.77	164.86	77.74	60.69	3.86						
	DS0 Channels Activated, each			UEP95	M1HDO	0.00	15.09									
Interoffice Channel Mileage - 2-Wire																
	Interoffice Channel Facilities Termination			UEP95	M1GBC	29.11										
	Interoffice Channel mileage, per mile or fraction of mile			UEP95	M1GBM	0.01										
Feature Activations (DS0) Centrex Loops on Channelized DS1 Service																
D4 Channel Bank Feature Activations																
	Feature Activation on D-4 Channel Bank Centrex Loop Slot			UEP95	1PQWS	0.62										
	Feature Activation on D-4 Channel Bank FX line Side Loop Slot			UEP95	1PQW6	0.62										
	Feature Activation on D-4 Channel Bank FX Trunk Side Loop Slot			UEP95	1PQW7	0.62										
	Feature Activation on D-4 Channel Bank Centrex Loop Slot - Different Wire Center			UEP95	1PQWP	0.62										
	Feature Activation on D-4 Channel Bank Private Line Loop Slot			UEP95	1PQWV	0.62										
	Feature Activation on D-4 Channel Bank Tjie Line/Trunk Loop Slot			UEP95	1PQWQ	0.62										
	Feature Activation on D-4 Channel Bank WATS Loop Slot			UEP95	1PQWA	0.62										
Non-Recurring Charges (NRC) Associated with UNE-P Centrex																
	NRC Conversion Currently Combined Switch-As-Is with allowed changes, per port			UEP95	USAC2		0.102	0.102								
	Conversion of Existing Centrex Common Block, each			UEP95	USACN		18.95	8.32								
	New Centrex Standard Common Block			UEP95	M1ACS	0.00	669.80	78.32	111.05	13.27						
	New Centrex Customized Common Block			UEP95	M1ACC	0.00	669.80	78.32	111.05	13.27						
	NAR Establishment Charge, Per Occasion			UEP95	URECA	0.00	72.75									
Additional Non-Recurring Charges (NRC)																
	Unbundled Miscellaneous Rate Element, Tag Loop at End Use Premise			UEP95	URETL		8.33	0.83								
	Unbundled Miscellaneous Rate Element, Tag Design Loop at End Use Premise			UEP95	URETN		11.21	1.10								
UNE-P CENTREX - DMS100 (Valid in All States)																
2-Wire VG Loop/2-Wire Voice Grade Port (Centrex) Combo																
UNE Port/Loop Combination Rates (Non-Design)																
	2-Wire VG Loop/2-Wire Voice Grade Port (Centrex) Port Combo - Non-Design					11.79										
	2-Wire VG Loop/2-Wire Voice Grade Port (Centrex)Port Combo - Non-Design					16.52										
	2-Wire VG Loop/2-Wire Voice Grade Port (Centrex)Port Combo - Non-Design					32.74										
UNE Port/Loop Combination Rates (Design)																
	2-Wire VG Loop/2-Wire Voice Grade Port (Centrex) Port Combo - Design					14.82										
	2-Wire VG Loop/2-Wire Voice Grade Port (Centrex)Port Combo - Design					19.60										
	2-Wire VG Loop/2-Wire Voice Grade Port (Centrex)Port Combo - Design					35.37										

UNBUNDLED NETWORK ELEMENTS - Kentucky

Attachment: 2 Ex. A

CATEGORY	RATE ELEMENTS	Interim	Zone	BCS	USOC	RATES ($)					Svc Order Submitted Elec per LSR	Svc Order Submitted Manually per LSR	Incremental Charge - Manual Svc Order vs. Electronic-1st	Incremental Charge - Manual Svc Order vs. Electronic-Add'l	Incremental Charge - Manual Svc Order vs. Electronic-Disc 1st	Incremental Charge - Manual Svc Order vs. Electronic-Disc Add'l
						Rec	Nonrecurring		Nonrecurring Disconnect		OSS Rates ($)					
							First	Add'l	First	Add'l	SOMEC	SOMAN	SOMAN	SOMAN	SOMAN	SOMAN
UNE Loop Rate																
	2-Wire Voice Grade Loop (SL 1) - Zone 1		1	UEP9D	UECS1	9.64										
	2-Wire Voice Grade Loop (SL 1) - Zone 2		2	UEP9D	UECS1	14.37										
	2-Wire Voice Grade Loop (SL 1) - Zone 3		3	UEP9D	UECS1	30.59										
	2-Wire Voice Grade Loop (SL 2) - Zone 1		1	UEP9D	UECS2	12.67										
	2-Wire Voice Grade Loop (SL 2) - Zone 2		2	UEP9D	UECS2	17.45										
	2-Wire Voice Grade Loop (SL 2) - Zone 3		3	UEP9D	UECS2	33.22										
UNE Port Rate																
ALL STATES																
	2-Wire Voice Grade Port (Centrex) Basic Local Area			UEP9D	UEPYA	2.15	21.29	15.49	2.85	2.67						
	2-Wire Voice Grade Port (Centrex 800 termination)Basic Local Area			UEP9D	UEPYB	2.15	21.29	15.49	2.85	2.67						
	2-Wire Voice Grade Port (Centrex / EBS-PSET)3Basic Local Area			UEP9D	UEPYC	2.15	21.29	15.49	2.85	2.67						
	2-Wire Voice Grade Port (Centrex / EBS-M5009)3Basic Local Area			UEP9D	UEPYD	2.15	21.29	15.49	2.85	2.67						
	2-Wire Voice Grade Port (Centrex / EBS-M5209))3 Basic Local Area			UEP9D	UEPYE	2.15	21.29	15.49	2.85	2.67						
	2-Wire Voice Grade Port (Centrex / EBS-M5112))3 Basic Local Area			UEP9D	UEPYF	2.15	21.29	15.49	2.85	2.67						
	2-Wire Voice Grade Port (Centrex / EBS-M5312))3Basic Local Area			UEP9D	UEPYG	2.15	21.29	15.49	2.85	2.67						
	2-Wire Voice Grade Port (Centrex / EBS-M5008))3 Basic Local Area			UEP9D	UEPYT	2.15	21.29	15.49	2.85	2.67						
	2-Wire Voice Grade Port (Centrex / EBS-M5208))3 Basic Local Area			UEP9D	UEPYU	2.15	21.29	15.49	2.85	2.67						
	2-Wire Voice Grade Port (Centrex / EBS-M5216))3 Basic Local Area			UEP9D	UEPYV	2.15	21.29	15.49	2.85	2.67						
	2-Wire Voice Grade Port (Centrex / EBS-M5316))3 Basic Local Area			UEP9D	UEPY3	2.15	21.29	15.49	2.85	2.67						
	2-Wire Voice Grade Port (Centrex with Caller ID) Basic Local Area			UEP9D	UEPYH	2.15	21.29	15.49	2.85	2.67						
	2-Wire Voice Grade Port (Centrex/Caller ID/Msg Wtg Lamp Indication))4 Basic Local Area			UEP9D	UEPYW	2.15	21.29	15.49	2.85	2.67						
	2-Wire Voice Grade Port (Centrex/Msg Wtg Lamp Indication))4 Basic Local Area			UEP9D	UEPYJ	2.15	21.29	15.49	2.85	2.67						
	2-Wire Voice Grade Port (Centrex from diff Serving Wire Center) 2,3-Basic Local Area			UEP9D	UEPYM	2.15	21.29	15.49	2.85	2.67						
	2-Wire Voice Grade Port (Centrex/differ SWC /EBS-PSET)2,3,4 Basic Local Area			UEP9D	UEPYO	2.15	21.29	15.49	2.85	2.67						
	2-Wire Voice Grade Port (Centrex/differ SWC /EBS-M5009)2,3,4 Basic Local Area			UEP9D	UEPYP	2.15	21.29	15.49	2.85	2.67						
	2-Wire Voice Grade Port (Centrex/differ SWC /EBS-5209)2,3,4 Basic Local Area			UEP9D	UEPYQ	2.15	21.29	15.49	2.85	2.67						
	2-Wire Voice Grade Port (Centrex/differ SWC /EBS-M5112)2,3,4 Basic Local Area			UEP9D	UEPYR	2.15	21.29	15.49	2.85	2.67						
	2-Wire Voice Grade Port (Centrex/differ SWC /EBS-M5312)2,3,4 Basic Local Area			UEP9D	UEPYS	2.15	21.29	15.49	2.85	2.67						
	2-Wire Voice Grade Port (Centrex/differ SWC /EBS-M5008)2,3,4 Basic Local Area			UEP9D	UEPY4	2.15	21.29	15.49	2.85	2.67						
	2-Wire Voice Grade Port (Centrex/differ SWC /EBS-M5208)2, 3 Basic Local Area			UEP9D	UEPY5	2.15	21.29	15.49	2.85	2.67						
	2-Wire Voice Grade Port (Centrex/differ SWC /EBS-M5216)2,3,4 Basic Local Area			UEP9D	UEPY6	2.15	21.29	15.49	2.85	2.67						
	2-Wire Voice Grade Port (Centrex/differ SWC /EBS-M5316)2,3,4 Basic Local Area			UEP9D	UEPY7	2.15	21.29	15.49	2.85	2.67						
	2-Wire Voice Grade Port, Diff Serving Wire Center - 800 Service Term 2,3			UEP9D	UEPYZ	2.15	21.29	15.49	2.85	2.67						
	2-Wire Voice Grade Port terminated in on Megalink or equivalent Basic Local Area			UEP9D	UEPY9	2.15	21.29	15.49	2.85	2.67						
	2-Wire Voice Grade Port Terminated on 800 Service Term Basic Local Area			UEP9D	UEPY2	2.15	21.29	15.49	2.85	2.67						
AL, KY, LA, MS, SC, & TN Only																
	2-Wire Voice Grade Port (Centrex)			UEP9D	UEPQA	2.15	21.29	15.49	2.85	2.67						

UNBUNDLED NETWORK ELEMENTS - Kentucky

Attachment: 2 Ex. A

CATEGORY	RATE ELEMENTS	Interim	Zone	BCS	USOC	RATES ($)					Svc Order Submitted Elec per LSR	Svc Order Submitted Manually per LSR	Incremental Charge - Manual Svc Order vs. Electronic-1st	Incremental Charge - Manual Svc Order vs. Electronic-Add'l	Incremental Charge - Manual Svc Order vs. Electronic-Disc 1st	Incremental Charge - Manual Svc Order vs. Electronic-Disc Add'l
						Rec	Nonrecurring		Nonrecurring Disconnect		OSS Rates ($)					
							First	Add'l	First	Add'l	SOMEC	SOMAN	SOMAN	SOMAN	SOMAN	SOMAN
	2-Wire Voice Grade Port (Centrex 800 termination)			UEP9D	UEPQB	2.15	21.29	15.49	2.85	2.67						
	2-Wire Voice Grade Port (Centrex / EBS-PSET)4			UEP9D	UEPQC	2.15	21.29	15.49	2.85	2.67						
	2-Wire Voice Grade Port (Centrex / EBS-M5009)4			UEP9D	UEPQD	2.15	21.29	15.49	2.85	2.67						
	2-Wire Voice Grade Port (Centrex / EBS-M5209)4			UEP9D	UEPQE	2.15	21.29	15.49	2.85	2.67						
	2-Wire Voice Grade Port (Centrex / EBS-M5112)4			UEP9D	UEPQF	2.15	21.29	15.49	2.85	2.67						
	2-Wire Voice Grade Port (Centrex / EBS-M5312)4			UEP9D	UEPQG	2.15	21.29	15.49	2.85	2.67						
	2-Wire Voice Grade Port (Centrex / EBS-M5008)4			UEP9D	UEPQT	2.15	21.29	15.49	2.85	2.67						
	2-Wire Voice Grade Port (Centrex / EBS-M5208)4			UEP9D	UEPQU	2.15	21.29	15.49	2.85	2.67						
	2-Wire Voice Grade Port (Centrex / EBS-M5216)4			UEP9D	UEPQV	2.15	21.29	15.49	2.85	2.67						
	2-Wire Voice Grade Port (Centrex / EBS-M5316)4			UEP9D	UEPQ3	2.15	21.29	15.49	2.85	2.67						
	2-Wire Voice Grade Port (Centrex with Caller ID)			UEP9D	UEPQH	2.15	21.29	15.49	2.85	2.67						
	2-Wire Voice Grade Port (Centrex/Caller ID/Msg Wtg Lamp Indication)4			UEP9D	UEPQW	2.15	21.29	15.49	2.85	2.67						
	2-Wire Voice Grade Port (Centrex/Msg Wtg Lamp Indication)4			UEP9D	UEPQJ	2.15	21.29	15.49	2.85	2.67						
	2-Wire Voice Grade Port (Centrex from diff Serving Wire Center) 2,3			UEP9D	UEPQM	2.15	21.29	15.49	2.85	2.67						
	2-Wire Voice Grade Port (Centrex/differ SWC /EBS-PSET)2,3,4			UEP9D	UEPQO	2.15	21.29	15.49	2.85	2.67						
	2-Wire Voice Grade Port (Centrex/differ SWC /EBS-M5009)2,3,4			UEP9D	UEPQP	2.15	21.29	15.49	2.85	2.67						
	2-Wire Voice Grade Port (Centrex/differ SWC /EBS-5209)2,3,4			UEP9D	UEPQQ	2.15	21.29	15.49	2.85	2.67						
	2-Wire Voice Grade Port (Centrex/differ SWC /EBS-M5112)2,3,4			UEP9D	UEPQR	2.15	21.29	15.49	2.85	2.67						
	2-Wire Voice Grade Port (Centrex/differ SWC /EBS-M5312)2,3,4			UEP9D	UEPQS	2.15	21.29	15.49	2.85	2.67						
	2-Wire Voice Grade Port (Centrex/differ SWC /EBS-M5008)2,3,4			UEP9D	UEPQ4	2.15	21.29	15.49	2.85	2.67						
	2-Wire Voice Grade Port (Centrex/differ SWC /EBS-M5208)2,3,4			UEP9D	UEPQ5	2.15	21.29	15.49	2.85	2.67						
	2-Wire Voice Grade Port (Centrex/differ SWC /EBS-M5216)2,3,4			UEP9D	UEPQ6	2.15	21.29	15.49	2.85	2.67						
	2-Wire Voice Grade Port (Centrex/differ SWC /EBS-M5316)2,3,4			UEP9D	UEPQ7	2.15	21.29	15.49	2.85	2.67						
	2-Wire Voice Grade Port, Diff Serving Wire Center - 800 Service Term 2,3			UEP9D	UEPQZ	2.15	21.29	15.49	2.85	2.67						
	2-Wire Voice Grade Port terminated in on Megalink or equivalent			UEP9D	UEPQ9	2.15	21.29	15.49	2.85	2.67						
	2-Wire Voice Grade Port Terminated on 800 Service Term			UEP9D	UEPQ2	2.15	21.29	15.49	2.85	2.67						
Local Switching																
	Centrex Intercom Funtionality, per port			UEP9D	URECS	0.8873										
Features																
	All Standard Features Offered, per port			UEP9D	UEPVF	0.00										
	All Select Features Offered, per port			UEP9D	UEPVS	0.00	405.66									
	All Centrex Control Features Offered, per port			UEP9D	UEPVC	0.00										
NARS																
	Unbundled Network Access Register - Combination			UEP9D	UARCX	0.00	0.00	0.00	0.00	0.00						
	Unbundled Network Access Register - Inward			UEP9D	UAR1X	0.00	0.00	0.00	0.00	0.00						
	Unbundled Network Access Register - Outdial			UEP9D	UAROX	0.00	0.00	0.00	0.00	0.00						
Miscellaneous Terminations																
2-Wire Trunk Side																
	Trunk Side Terminations, each			UEP9D	CEND6	10.51	92.18	15.82	52.16	5.30						
4-Wire Digital (1.544 Megabits)																
	DS1 Circuit Terminations, each			UEP9D	M1HD1	74.77	164.86	77.74	60.69	3.86						
	DS0 Channels Activiated per Channel			UEP9D	M1HDO	0.00	15.09									
Interoffice Channel Mileage - 2-Wire																
	Interoffice Channel Facilities Termination			UEP9D	M1GBC	29.11										
	Interoffice Channel mileage, per mile or fraction of mile			UEP9D	M1GBM	0.01										
Feature Activations (DS0) Centrex Loops on Channelized DS1 Service																
D4 Channel Bank Feature Activations																
	Feature Activation on D-4 Channel Bank Centrex Loop Slot			UEP9D	1PQWS	0.62										
	Feature Activation on D-4 Channel Bank FX line Side Loop Slot			UEP9D	1PQW6	0.62										

CATEGORY	RATE ELEMENTS	Interim	Zone	BCS	USOC	RATES ($)					Svc Order Submitted Elec per LSR	Svc Order Submitted Manually per LSR	Incremental Charge - Manual Svc Order vs. Electronic-1st	Incremental Charge - Manual Svc Order vs. Electronic-Add'l	Incremental Charge - Manual Svc Order vs. Electronic-Disc 1st	Incremental Charge - Manual Svc Order vs. Electronic-Disc Add'l
						Rec	Nonrecurring		Nonrecurring Disconnect		OSS Rates ($)					
							First	Add'l	First	Add'l	SOMEC	SOMAN	SOMAN	SOMAN	SOMAN	SOMAN
	Feature Activation on D-4 Channel Bank FX Trunk Side Loop Slot			UEP9D	1PQW7	0.62										
	Feature Activation on D-4 Channel Bank Centrex Loop Slot - Different Wire Center			UEP9D	1PQWP	0.62										
	Feature Activation on D-4 Channel Bank Private Line Loop Slot			UEP9D	1PQWV	0.62										
	Feature Activation on D-4 Channel Bank Tjie Line/Trunk Loop Slot			UEP9D	1PQWQ	0.62										
	Feature Activation on D-4 Channel Bank WATS Loop Slot			UEP9D	1PQWA	0.62										
	Non-Recurring Charges (NRC) Associated with UNE-P Centrex															
	NRC Conversion Currently Combined Switch-As-Is with allowed changes, per port			UEP9D	USAC2		0.102	0.102								
	Conversion of existing Centrex Common Block, each			UEP9D	USACN		18.95	8.32								
	New Centrex Standard Common Block			UEP9D	M1ACS	0.00	669.80	78.32	111.05	13.27						
	New Centrex Customized Common Block			UEP9D	M1ACC	0.00	669.80	78.32	111.05	13.27						
	NAR Establishment Charge, Per Occasion			UEP9D	URECA	0.00	72.75									
	Additional Non-Recurring Charges (NRC)															
	Unbundled Miscellaneous Rate Element, Tag Loop at End Use Premise			UEP9D	URETL		8.33	0.83								
	Unbundled Miscellaneous Rate Element, Tag Design Loop at End Use Premise			UEP9D	URETN		11.21	1.10								
	UNE-P CENTREX - EWSD (Valid in AL, FL, KY, LA, MS & TN)															
	2-Wire VG Loop/2-Wire Voice Grade Port (Centrex) Combo															
	UNE Port/Loop Combination Rates (Non-Design)															
	2-Wire VG Loop/2-Wire Voice Grade Port (Centrex) Port Combo - Non-Design					11.79										
	2-Wire VG Loop/2-Wire Voice Grade Port (Centrex)Port Combo - Non-Design					16.52										
	2-Wire VG Loop/2-Wire Voice Grade Port (Centrex)Port Combo - Non-Design					32.74										
	UNE Port/Loop Combination Rates (Design)															
	2-Wire VG Loop/2-Wire Voice Grade Port (Centrex) Port Combo - Design					14.82										
	2-Wire VG Loop/2-Wire Voice Grade Port (Centrex)Port Combo - Design					19.60										
	2-Wire VG Loop/2-Wire Voice Grade Port (Centrex)Port Combo - Design					35.37										
	UNE Loop Rate															
	2-Wire Voice Grade Loop (SL 1) - Zone 1		1	UEP9E	UECS1	9.64										
	2-Wire Voice Grade Loop (SL 1) - Zone 2		2	UEP9E	UECS1	14.37										
	2-Wire Voice Grade Loop (SL 1) - Zone 3		3	UEP9E	UECS1	30.59										
	2-Wire Voice Grade Loop (SL 2) - Zone 1		1	UEP9E	UECS2	12.67										
	2-Wire Voice Grade Loop (SL 2) - Zone 2		2	UEP9E	UECS2	17.45										
	2-Wire Voice Grade Loop (SL 2) - Zone 3		3	UEP9E	UECS2	33.22										
	UNE Port Rate															
	AL, FL, KY, LA, MS, & TN only															
	2-Wire Voice Grade Port (Centrex) Basic Local Area			UEP9E	UEPYA	2.15	21.29	15.49	2.85	2.67						
	2-Wire Voice Grade Port (Centrex 800 termination)Basic Local Area			UEP9E	UEPYB	2.15	21.29	15.49	2.85	2.67						
	2-Wire Voice Grade Port (Centrex with Caller ID)1Basic Local Area			UEP9E	UEPYH	2.15	21.29	15.49	2.85	2.67						
	2-Wire Voice Grade Port (Centrex from diff Serving Wire Center)2,3 Basic Local Area			UEP9E	UEPYM	2.15	21.29	15.49	2.85	2.67						
	2-Wire Voice Grade Port, Diff Serving Wire Center 2,3 - 800 Service Term - Basic Local Area			UEP9E	UEPYZ	2.15	21.29	15.49	2.85	2.67						
	2-Wire Voice Grade Port terminated in on Megalink or equivalent - Basic Local Area			UEP9E	UEPY9	2.15	21.29	15.49	2.85	2.67						
	2-Wire Voice Grade Port Terminated on 800 Service Term - Basic Local Area			UEP9E	UEPY2	2.15	21.29	15.49	2.85	2.67						
	AL, KY, LA, MS, & TN Only															
	2-Wire Voice Grade Port (Centrex)			UEP9E	UEPQA	2.15	21.29	15.49	2.85	2.67						
	2-Wire Voice Grade Port (Centrex 800 termination)			UEP9E	UEPQB	2.15	21.29	15.49	2.85	2.67						
	2-Wire Voice Grade Port (Centrex with Caller ID)1			UEP9E	UEPQH	2.15	21.29	15.49	2.85	2.67						

UNBUNDLED NETWORK ELEMENTS - Kentucky

Attachment: 2 Ex. A

CATEGORY	RATE ELEMENTS	Interim	Zone	BCS	USOC	RATES ($)					Svc Order Submitted Elec per LSR	Svc Order Submitted Manually per LSR	Incremental Charge - Manual Svc Order vs. Electronic-1st	Incremental Charge - Manual Svc Order vs. Electronic-Add'l	Incremental Charge - Manual Svc Order vs. Electronic-Disc 1st	Incremental Charge - Manual Svc Order vs. Electronic-Disc Add'l
						Rec	Nonrecurring		Nonrecurring Disconnect		OSS Rates ($)					
							First	Add'l	First	Add'l	SOMEC	SOMAN	SOMAN	SOMAN	SOMAN	SOMAN
	2-Wire Voice Grade Port (Centrex from diff Serving Wire Center)2,3			UEP9E	UEPQM	2.15	21.29	15.49	2.85	2.67						
	2-Wire Voice Grade Port, Diff Serving Wire Center 2,3 - 800 Service Term			UEP9E	UEPQZ	2.15	21.29	15.49	2.85	2.67						
	2-Wire Voice Grade Port terminated in on Megalink or equivalent			UEP9E	UEPQ9	2.15	21.29	15.49	2.85	2.67						
	2-Wire Voice Grade Port Terminated on 800 Service Term			UEP9E	UEPQ2	2.15	21.29	15.49	2.85	2.67						
Local Switching																
	Centrex Intercom Funtionality, per port			UEP9E	URECS	0.8873										
Features																
	All Standard Features Offered, per port			UEP9E	UEPVF	0.00										
	All Select Features Offered, per port			UEP9E	UEPVS	0.00	405.66									
	All Centrex Control Features Offered, per port			UEP9E	UEPVC	0.00										
NARS																
	Unbundled Network Access Register - Combination			UEP9E	UARCX	0.00	0.00	0.00	0.00	0.00						
	Unbundled Network Access Register - Indial			UEP9E	UAR1X	0.00	0.00	0.00	0.00	0.00						
	Unbundled Network Access Register - Outdial			UEP9E	UAROX	0.00	0.00	0.00	0.00	0.00						
Miscellaneous Terminations																
2-Wire Trunk Side																
	Trunk Side Terminations, each			UEP9E	CEND6	10.51	92.18	15.82	52.16	5.30						
4-Wire Digital (1.544 Megabits)																
	DS1 Circuit Terminations, each			UEP9E	M1HD1	74.77	164.86	77.74	60.69	3.86						
	DS0 Channel Activated Per Channel			UEP9E	M1HDO	0.00	15.09									
Interoffice Channel Mileage - 2-Wire																
	Interoffice Channel Facilities Termination			UEP9E	M1GBC	29.11										
	Interoffice Channel mileage, per mile or fraction of mile			UEP9E	M1GBM	0.01										
Feature Activations (DS0) Centrex Loops on Channelized DS1 Service																
D4 Channel Bank Feature Activations																
	Feature Activation on D-4 Channel Bank Centrex Loop Slot			UEP9E	1PQWS	0.62										
	Feature Activation on D-4 Channel Bank FX line Side Loop Slot			UEP9E	1PQW6	0.62										
	Feature Activation on D-4 Channel Bank FX Trunk Side Loop Slot			UEP9E	1PQW7	0.62										
	Feature Activation on D-4 Channel Bank Centrex Loop Slot - Different Wire Center			UEP9E	1PQWP	0.62										
	Feature Activation on D-4 Channel Bank Private Line Loop Slot			UEP9E	1PQWV	0.62										
	Feature Activation on D-4 Channel Bank Tjie Line/Trunk Loop Slot			UEP9E	1PQWQ	0.62										
	Feature Activation on D-4 Channel Bank WATS Loop Slot			UEP9E	1PQWA	0.62										
Non-Recurring Charges (NRC) Associated with UNE-P Centrex																
	NRC Conversion Currently Combined Switch-As-Is with allowed changes, per port			UEP9E	USAC2		0.102	0.102								
	Conversion of Existing Centrex Common Block, each			UEP9E	USACN		18.95	8.32								
	New Centrex Standard Common Block			UEP9E	M1ACS	0.00	669.80	78.32	111.05	13.27						
	New Centrex Customized Common Block			UEP9E	M1ACC	0.00	669.80	78.32	111.05	13.27						
	NAR Establishment Charge, Per Occasion			UEP9E	URECA	0.00	72.75									
Additional Non-Recurring Charges (NRC)																
	Unbundled Miscellaneous Rate Element, Tag Loop at End Use Premise			UEP9E	URETL		8.33	0.83								
	Unbundled Miscellaneous Rate Element, Tag Design Loop at End Use Premise			UEP9E	URETN		11.21	1.10								
UNE-P CENTREX - DCO - Valid in AL, KY, LA, MS, & TN)																
2-Wire VG Loop/2-Wire Voice Grade Port (Centrex) Combo																
UNE Port/Loop Combination Rates (Non-Design)																
	2-Wire VG Loop/2-Wire Voice Grade Port (Centrex) Port Combo - Non-Design					11.79										
	2-Wire VG Loop/2-Wire Voice Grade Port (Centrex)Port Combo - Non-Design					16.52										
	2-Wire VG Loop/2-Wire Voice Grade Port (Centrex)Port Combo - Non-Design					32.74										
UNE Port/Loop Combination Rates (Design)																
	2-Wire VG Loop/2-Wire Voice Grade Port (Centrex) Port Combo - Design					14.82										

CATEGORY	RATE ELEMENTS	Interim	Zone	BCS	USOC	RATES ($)					Svc Order Submitted Elec per LSR	Svc Order Submitted Manually per LSR	Incremental Charge - Manual Svc Order vs. Electronic-1st	Incremental Charge - Manual Svc Order vs. Electronic-Add'l	Incremental Charge - Manual Svc Order vs. Electronic-Disc 1st	Incremental Charge - Manual Svc Order vs. Electronic-Disc Add'l
						Rec	Nonrecurring		Nonrecurring Disconnect		OSS Rates ($)					
							First	Add'l	First	Add'l	SOMEC	SOMAN	SOMAN	SOMAN	SOMAN	SOMAN
	2-Wire VG Loop/2-Wire Voice Grade Port (Centrex)Port Combo - Design					19.60										
	2-Wire VG Loop/2-Wire Voice Grade Port (Centrex)Port Combo - Design					35.37										
UNE Loop Rate																
	2-Wire Voice Grade Loop (SL 1) - Zone 1		1	UEP93	UECS1	9.64										
	2-Wire Voice Grade Loop (SL 1) - Zone 2		2	UEP93	UECS1	14.37										
	2-Wire Voice Grade Loop (SL 1) - Zone 3		3	UEP93	UECS1	30.59										
	2-Wire Voice Grade Loop (SL 2) - Zone 1		1	UEP93	UECS2	12.67										
	2-Wire Voice Grade Loop (SL 2) - Zone 2		2	UEP93	UECS2	17.45										
	2-Wire Voice Grade Loop (SL 2) - Zone 3		3	UEP93	UECS2	33.22										
UNE Port Rate																
AL, KY, LA, MS, & TN only																
	2-Wire Voice Grade Port (Centrex) Basic Local Area			UEP93	UEPYA	2.15	21.29	15.49	2.85	2.67						
	2-Wire Voice Grade Port (Centrex 800 termination)Basic Local Area			UEP93	UEPYB	2.15	21.29	15.49	2.85	2.67						
	2-Wire Voice Grade Port (Centrex with Caller ID)1Basic Local Area			UEP93	UEPYH	2.15	21.29	15.49	2.85	2.67						
	2-Wire Voice Grade Port (Centrex from diff Serving Wire Center)2,3 Basic Local Area			UEP93	UEPYM	2.15	21.29	15.49	2.85	2.67						
	2-Wire Voice Grade Port, Diff Serving Wire Center - 2,3 - 800 Service Term - Basic Local Area			UEP93	UEPYZ	2.15	21.29	15.49	2.85	2.67						
	2-Wire Voice Grade Port terminated in on Megalink or equivalent - Basic Local Area			UEP93	UEPY9	2.15	21.29	15.49	2.85	2.67						
	2-Wire Voice Grade Port Terminated on 800 Service Term - Basic Local Area			UEP93	UEPY2	2.15	21.29	15.49	2.85	2.67						
	2-Wire Voice Grade Port (Centrex)			UEP93	UEPQA	2.15	21.29	15.49	2.85	2.67						
	2-Wire Voice Grade Port (Centrex 800 termination)			UEP93	UEPQB	2.15	21.29	15.49	2.85	2.67						
	2-Wire Voice Grade Port (Centrex with Caller ID)1			UEP93	UEPQH	2.15	21.29	15.49	2.85	2.67						
	2-Wire Voice Grade Port (Centrex from diff Serving Wire Center)2,3			UEP93	UEPQM	2.15	21.29	15.49	2.85	2.67						
	2-Wire Voice Grade Port, Diff Serving Wire Center - 2,3 -800 Service Term			UEP93	UEPQZ	2.15	21.29	15.49	2.85	2.67						
	2-Wire Voice Grade Port terminated in on Megalink or equivalent			UEP93	UEPQ9	2.15	21.29	15.49	2.85	2.67						
	2-Wire Voice Grade Port Terminated on 800 Service Term			UEP93	UEPQ2	2.15	21.29	15.49	2.85	2.67						
Local Switching																
	Centrex Intercom Funtionality, per port			UEP93	URECS	0.8873										
Features																
	All Standard Features Offered, per port			UEP93	UEPVF	0.00										
	All Centrex Control Features Offered, per port			UEP93	UEPVC	0.00										
NARS																
	Unbundled Network Access Register - Combination			UEP93	UARCX	0.00	0.00	0.00	0.00	0.00						
	Unbundled Network Access Register - Indial			UEP93	UAR1X	0.00	0.00	0.00	0.00	0.00						
	Unbundled Network Access Register - Outdial			UEP93	UAROX	0.00	0.00	0.00	0.00	0.00						
Miscellaneous Terminations																
2-Wire Trunk Side																
	Trunk Side Terminations, each			UEP93	CEND6	10.51	92.18	15.82	52.16	5.30						
4-Wire Digital (1.544 Megabits)																
	DS1 Circuit Terminations, each			UEP93	M1HD1	74.77	164.86	77.74	60.69	3.86						
	DS0 Channels Activated, Per Channel			UEP93	M1HDO	0.00	15.09									
Interoffice Channel Mileage - 2-Wire																
	Interoffice Channel Facilities Termination			UEP93	M1GBC	29.11										
	Interoffice Channel mileage, per mile or fraction of mile			UEP93	M1GBM	0.01										
Feature Activations (DS0) Centrex Loops on Channelized DS1 Service																
D4 Channel Bank Feature Activations																
	Feature Activation on D-4 Channel Bank Centrex Loop Slot			UEP93	1PQWS	0.62										
	Feature Activation on D-4 Channel Bank FX Line Side Loop Slot			UEP93	1PQW6	0.62										
	Feature Activation on D-4 Channel Bank FX Trunk Side Loop Slot			UEP93	1PQW7	0.62										
	Feature Activation on D-4 Channel Bank Centrex Loop Slot - Different Wire Center			UEP93	1PQWP	0.62										

UNBUNDLED NETWORK ELEMENTS - Kentucky														Attachment: 2 Ex. A				
CATEGORY		RATE ELEMENTS	Interim	Zone	BCS	USOC	RATES ($)					Svc Order Submitted Elec per LSR	Svc Order Submitted Manually per LSR	Incremental Charge - Manual Svc Order vs. Electronic-1st	Incremental Charge - Manual Svc Order vs. Electronic-Add'l	Incremental Charge - Manual Svc Order vs. Electronic-Disc 1st	Incremental Charge - Manual Svc Order vs. Electronic-Disc Add'l	
							Rec	Nonrecurring		Nonrecurring Disconnect		OSS Rates ($)						
								First	Add'l	First	Add'l	SOMEC	SOMAN	SOMAN	SOMAN	SOMAN	SOMAN	
		Feature Activation on D-4 Channel Bank Private Line Loop Slot			UEP93	1PQWV	0.62											
		Feature Activation on D-4 Channel Bank Tie Line/Trunk Loop Slot			UEP93	1PQWQ	0.62											
		Feature Activation on D-4 Channel Bank WATS Loop Slot			UEP93	1PQWA	0.62											
	Non-Recurring Charges (NRC) Associated with UNE-P Centrex																	
		NRC Conversion Currently Combined Switch-As-Is with allowed changes, per port			UEP93	USAC2		0.102	0.102									
		Conversion of Existing Centrex Common Block, each			UEP93	USACN		18.95	8.32									
		New Centrex Standard Common Block			UEP93	M1ACS	0.00	669.80	78.32	111.05	13.27							
		New Centrex Customized Common Block			UEP93	M1ACC	0.00	669.80	78.32	111.05	13.27							
		NAR Establishment Charge, Per Occasion			UEP93	URECA	0.00	72.75										
	Additional Non-Recurring Charges (NRC)																	
		Unbundled Miscellaneous Rate Element, Tag Loop at End Use Premise			UEP93	URETL		8.33	0.83									
		Unbundled Miscellaneous Rate Element, Tag Design Loop at End Use Premise			UEP93	URETN		11.21	1.10									
	Note 1 - Required Port for Centrex Control in 1AESS, 5ESS & EWSD																	
	Note 2 - Requres Interoffice Channel Mileage																	
	Note 3 - Installation is combination of Installation charge for SL2 Loop and Port																	
	Note 4 - Requires Specific Customer Premises Equipment																	
	Note: Rates displaying an "I" in Interim column are interim as a result of a Commission order.																	

UNBUNDLED NETWORK ELEMENTS - Louisiana

Attachment: 2 Ex. A

CATEGORY	RATE ELEMENTS	Interim	Zone	BCS	USOC	RATES ($) Rec	Nonrecurring First	Nonrecurring Add'l	Nonrecurring Disconnect First	Nonrecurring Disconnect Add'l	Svc Order Submitted Elec per LSR	Svc Order Submitted Manually per LSR	Incremental Charge - Manual Svc Order vs. Electronic-1st	Incremental Charge - Manual Svc Order vs. Electronic-Add'l	Incremental Charge - Manual Svc Order vs. Electronic-Disc 1st	Incremental Charge - Manual Svc Order vs. Electronic-Disc Add'l
											OSS Rates ($)					
							First	Add'l	First	Add'l	SOMEC	SOMAN	SOMAN	SOMAN	SOMAN	SOMAN
	The "Zone" shown in the sections for stand-alone loops or loops as part of a combination refers to Geographically Deaveraged UNE Zones. To view Geographically Deaveraged UNE Zone Designations by Central Office, refer to internet Website: http://www.interconnection.bellsouth.com/become_a_clec/html/interconnection.htm															
OPERATIONAL SUPPORT SYSTEMS (OSS) - "REGIONAL RATES"																
	NOTE: (1) CLEC should contact its contract negotiator if it prefers the "state specific" OSS charges as ordered by the State Commissions. The OSS charges currently contained in this rate exhibit are the BellSouth "regional" service ordering charges. CLEC may elect either the state specific Commission ordered rates for the service ordering charges, or CLEC may elect the regional service ordering charge, however, CLEC can not obtain a mixture of the two regardless if CLEC has a interconnection contract established in each of the 9 states.															
	NOTE: (2) Any element that can be ordered electronically will be billed according to the SOMEC rate listed in this category. Please refer to BellSouth's Local Ordering Handbook (LOH) to determine if a product can be ordered electronically. For those elements that cannot be ordered electronically at present per the LOH, the listed SOMEC rate in this category reflects the charge that would be billed to a CLEC once electronic ordering capabilities come on-line for that element. Otherwise, the manual ordering charge, SOMAN, will be applied to a CLECs bill when it submits an LSR to BellSouth.															
	OSS - Electronic Service Order Charge, Per Local Service Request (LSR) - UNE Only				SOMEC		3.50	0.00	3.50	0.00						
	OSS - Manual Service Order Charge, Per Local Service Request (LSR) - UNE Only				SOMAN		15.20	0.00	15.20	0.00						
UNE SERVICE DATE ADVANCEMENT CHARGE																
	NOTE: The Expedite charge will be maintained commensurate with BellSouth's FCC No.1 Tariff, Section 5 as applicable.															
	UNE Expedite Charge per Circuit or Line Assignable USOC, per Day			UAL, UEANL, UCL, UEF, UDF, UEQ, UDL, UENTW, UDN, UEA, UHL, ULC, USL, U1T12, U1T48, U1TD1, U1TD3, U1TDX, U1TO3, U1TS1, U1TVX, UC1BC, UC1BL, UC1CC, UC1CL, UC1DC, UC1DL, UC1EC, UC1EL, UC1FC, UC1FL, UC1GC, UC1GL, UC1HC, UC1HL, UDL12, UDL48, UDLO3, UDLSX, UE3, ULD12, ULD48, ULDD1, ULDD3, ULDDX, ULDO3, ULDS1, ULDVX, UNC1X, UNC3X, UNCDX, UNCNX, UNCSX, UNCVX, UNLD1, UNLD3, UXTD1, UXTD3, UXTS1, U1TUC, U1TUD, U1TUB, U1TUA	SDASP		200.00									
ORDER MODIFICATION CHARGE																
	Order Modification Charge (OMC)						26.21	0.00	0.00	0.00						
	Order Modification Additional Dispatch Charge (OMCAD)						150.00	0.00	0.00	0.00						
UNBUNDLED EXCHANGE ACCESS LOOP																
	2-WIRE ANALOG VOICE GRADE LOOP															
	2-Wire Analog Voice Grade Loop - Service Level 1- Zone 1		1	UEANL	UEAL2	12.90	36.54	16.87								
	2-Wire Analog Voice Grade Loop - Service Level 1- Zone 2		2	UEANL	UEAL2	23.33	36.54	16.87								
	2-Wire Analog Voice Grade Loop - Service Level 1- Zone 3		3	UEANL	UEAL2	48.43	36.54	16.87								
	2-Wire Analog Voice Grade Loop - Service Level 1- Zone 1		1	UEANL	UEASL	12.90	36.54	16.87								
	2-Wire Analog Voice Grade Loop - Service Level 1- Zone 2		2	UEANL	UEASL	23.33	36.54	16.87								
	2-Wire Analog Voice Grade Loop - Service Level 1- Zone 3		3	UEANL	UEASL	48.43	36.54	16.87								
	Unbundled Miscellaneous Rate Element, Tag Loop at End User Premise			UEANL	URETL		8.33	0.83								
	Loop Testing - Basic 1st Half Hour			UEANL	URET1		33.17	33.17								
	Loop Testing - Basic Additional Half Hour			UEANL	URETA		19.28	19.28								
	CLEC to CLEC Conversion Charge Without Outside Dispatch (UVL-SL1)			UEANL	UREWO		15.75	8.93								

UNBUNDLED NETWORK ELEMENTS - Louisiana

Attachment: 2 Ex. A

CATEGORY	RATE ELEMENTS	Interim	Zone	BCS	USOC	RATES ($)					Svc Order Submitted Elec per LSR	Svc Order Submitted Manually per LSR	Incremental Charge - Manual Svc Order vs. Electronic-1st	Incremental Charge - Manual Svc Order vs. Electronic-Add'l	Incremental Charge - Manual Svc Order vs. Electronic-Disc 1st	Incremental Charge - Manual Svc Order vs. Electronic-Disc Add'l
						Rec	Nonrecurring		Nonrecurring Disconnect		OSS Rates ($)					
							First	Add'l	First	Add'l	SOMEC	SOMAN	SOMAN	SOMAN	SOMAN	SOMAN
	Unbundled Voice Loop, Non-Design Voice Loop, billing for BST providing make-up (Engineering Information - E.I.)			UEANL	UEANM		13.04	13.04								
	Manual Order Coordination for UVL-SL1s (per loop)			UEANL	UEAMC		7.92	7.92								
	Order Coordination for Specified Conversion Time for UVL-SL1 (per LSR)			UEANL	OCOSL		17.56	17.56								
2-WIRE Unbundled COPPER LOOP																
	2-Wire Unbundled Copper Loop - Non-Designed Zone 1		1	UEQ	UEQ2X	12.40	35.27	15.60								
	2 Wire Unbundled Copper Loop - Non-Designed - Zone 2		2	UEQ	UEQ2X	14.32	35.27	15.60								
	2 Wire Unbundled Copper Loop - Non-Designed - Zone 3		3	UEQ	UEQ2X	16.87	35.27	15.60								
	Unbundled Miscellaneous Rate Element, Tag Loop at End User Premise			UEQ	URETL		8.33	0.83								
	Manual Order Coordination 2 Wire Unbundled Copper Loop - Non-Designed (per loop)			UEQ	USBMC		7.92	7.92								
	Unbundled Copper Loop, Non-Design Copper Loop, billing for BST providing make-up (Engineering Information - E.I.)			UEQ	UEQMU		13.04	13.04								
	Loop Testing - Basic 1st Half Hour			UEQ	URET1		33.17	33.17								
	Loop Testing - Basic Additional Half Hour			UEQ	URETA		19.28	19.28								
	CLEC to CLEC Conversion Charge Without Outside Dispatch (UCL-ND)			UEQ	UREWO		14.25	7.42								
UNBUNDLED EXCHANGE ACCESS LOOP																
2-WIRE ANALOG VOICE GRADE LOOP																
	2 Wire Analog Voice Grade Loop-Service Level 1-Line Splitting-Zone 1		1	UEPSR UEPSB	UEALS	12.90	36.54	16.87	0.00	0.00						
	2 Wire Analog Voice Grade Loop-Service Level 1-Line Splitting-Zone 1		1	UEPSR UEPSB	UEABS	12.90	36.54	16.87	0.00	0.00						
	2 Wire Analog Voice Grade Loop- Service Level 1-Line Splitting-Zone 2		2	UEPSR UEPSB	UEALS	23.33	36.54	16.87	0.00	0.00						
	2 Wire Analog Voice Grade Loop- Service Level 1-Line Splitting-Zone 2		2	UEPSR UEPSB	UEABS	23.33	36.54	16.87	0.00	0.00						
	2 Wire Analog Voice Grade Loop-Service Level 1-Line Splitting-Zone 3		3	UEPSR UEPSB	UEALS	48.43	36.54	16.87	0.00	0.00						
	2 Wire Analog Voice Grade Loop-Service Level 1-Line Splitting-Zone 3		3	UEPSR UEPSB	UEABS	48.43	36.54	16.87	0.00	0.00						
UNBUNDLED EXCHANGE ACCESS LOOP																
2-WIRE ANALOG VOICE GRADE LOOP																
	2-Wire Analog Voice Grade Loop - Service Level 2 w/Loop or Ground Start Signaling - Zone 1		1	UEA	UEAL2	14.93	102.10	65.72								
	2-Wire Analog Voice Grade Loop - Service Level 2 w/Loop or Ground Start Signaling - Zone 2		2	UEA	UEAL2	25.35	102.10	65.72								
	2-Wire Analog Voice Grade Loop - Service Level 2 w/Loop or Ground Start Signaling - Zone 3		3	UEA	UEAL2	50.46	102.10	65.72								
	Order Coordination for Specified Conversion Time (per LSR)			UEA	OCOSL		17.56									
	2-Wire Analog Voice Grade Loop - Service Level 2 w/Reverse Battery Signaling - Zone 1		1	UEA	UEAR2	14.93	102.10	65.72								
	2-Wire Analog Voice Grade Loop - Service Level 2 w/Reverse Battery Signaling - Zone 2		2	UEA	UEAR2	25.35	102.10	65.72								
	2-Wire Analog Voice Grade Loop - Service Level 2 w/Reverse Battery Signaling - Zone 3		3	UEA	UEAR2	50.46	102.10	65.72								
	Order Coordination for Specified Conversion Time (per LSR)			UEA	OCOSL		17.56									
	CLEC to CLEC Conversion Charge without outside dispatch			UEA	UREWO		87.59	36.30								
	Loop Tagging - Service Level 2 (SL2)			UEA	URETL		11.20	1.10								
4-WIRE ANALOG VOICE GRADE LOOP																
	4-Wire Analog Voice Grade Loop - Zone 1		1	UEA	UEAL4	30.81	127.40	91.02								
	4-Wire Analog Voice Grade Loop - Zone 2		2	UEA	UEAL4	38.32	127.40	91.02								
	4-Wire Analog Voice Grade Loop - Zone 3		3	UEA	UEAL4	60.39	127.40	91.02								
	Order Coordination for Specified Conversion Time (per LSR)			UEA	OCOSL		17.56									
	CLEC to CLEC Conversion Charge without outside dispatch			UEA	UREWO		87.59	36.30								
2-WIRE ISDN DIGITAL GRADE LOOP																
	2-Wire ISDN Digital Grade Loop - Zone 1		1	UDN	U1L2X	22.09	113.34	76.96								
	2-Wire ISDN Digital Grade Loop - Zone 2		2	UDN	U1L2X	35.28	113.34	76.96								
	2-Wire ISDN Digital Grade Loop - Zone 3		3	UDN	U1L2X	65.18	113.34	76.96								
	Order Coordination For Specified Conversion Time (per LSR)			UDN	OCOSL		17.56									
	CLEC to CLEC Conversion Charge without outside dispatch			UDN	UREWO		91.49	44.09								
2-WIRE ASYMMETRICAL DIGITAL SUBSCRIBER LINE (ADSL) COMPATIBLE LOOP																

CATEGORY	RATE ELEMENTS	Interim	Zone	BCS	USOC	RATES ($)					Svc Order Submitted Elec per LSR	Svc Order Submitted Manually per LSR	Incremental Charge - Manual Svc Order vs. Electronic-1st	Incremental Charge - Manual Svc Order vs. Electronic-Add'l	Incremental Charge - Manual Svc Order vs. Electronic-Disc 1st	Incremental Charge - Manual Svc Order vs. Electronic-Disc Add'l
						Rec	Nonrecurring		Nonrecurring Disconnect		OSS Rates ($)					
							First	Add'l	First	Add'l	SOMEC	SOMAN	SOMAN	SOMAN	SOMAN	SOMAN
	2 Wire Unbundled ADSL Loop including manual service inquiry & facility reservation - Zone 1		1	UAL	UAL2X	12.29	117.08	68.36								
	2 Wire Unbundled ADSL Loop including manual service inquiry & facility reservation - Zone 2		2	UAL	UAL2X	14.09	117.08	68.36								
	2 Wire Unbundled ADSL Loop including manual service inquiry & facility reservation - Zone 3		3	UAL	UAL2X	15.75	117.08	68.36								
	Order Coordination for Specified Conversion Time (per LSR)			UAL	OCOSL		17.56									
	2 Wire Unbundled ADSL Loop without manual service inquiry & facility reservaton - Zone 1		1	UAL	UAL2W	12.29	92.83	56.02								
	2 Wire Unbundled ADSL Loop without manual service inquiry & facility reservaton - Zone 2		2	UAL	UAL2W	14.09	92.83	56.02								
	2 Wire Unbundled ADSL Loop without manual service inquiry & facility reservaton - Zone 3		3	UAL	UAL2W	15.75	92.83	56.02								
	Order Coordination for Specified Conversion Time (per LSR)			UAL	OCOSL		17.56									
	CLEC to CLEC Conversion Charge without outside dispatch			UAL	UREWO		86.07	40.34								
	2-WIRE HIGH BIT RATE DIGITAL SUBSCRIBER LINE (HDSL) COMPATIBLE LOOP															
	2 Wire Unbundled HDSL Loop including manual service inquiry & facility reservation - Zone 1		1	UHL	UHL2X	9.79	125.50	76.77								
	2 Wire Unbundled HDSL Loop including manual service inquiry & facility reservation - Zone 2		2	UHL	UHL2X	11.52	125.50	76.77								
	2 Wire Unbundled HDSL Loop including manual service inquiry & facility reservation - Zone 3		3	UHL	UHL2X	12.74	125.50	76.77								
	Order Coordination for Specified Conversion Time (per LSR)			UHL	OCOSL		17.56									
	2 Wire Unbundled HDSL Loop without manual service inquiry and facility reservation - Zone 1		1	UHL	UHL2W	9.79	101.24	64.43								
	2 Wire Unbundled HDSL Loop without manual service inquiry and facility reservation - Zone 2		2	UHL	UHL2W	11.52	101.24	64.43								
	2 Wire Unbundled HDSL Loop without manual service inquiry and facility reservation - Zone 3		3	UHL	UHL2W	12.74	101.24	64.43								
	Order Coordination for Specified Conversion Time (per LSR)			UHL	OCOSL		17.56									
	CLEC to CLEC Conversion Charge without outside dispatch			UHL	UREWO		86.00	40.34								
	4-WIRE HIGH BIT RATE DIGITAL SUBSCRIBER LINE (HDSL) COMPATIBLE LOOP															
	4 Wire Unbundled HDSL Loop including manual service inquiry and facility reservation - Zone 1		1	UHL	UHL4X	16.24	153.26	104.54								
	4-Wire Unbundled HDSL Loop including manual service inquiry and facility reservation - Zone 2		2	UHL	UHL4X	16.65	153.26	104.54								
	4-Wire Unbundled HDSL Loop including manual service inquiry and facility reservation - Zone 3		3	UHL	UHL4X	17.34	153.26	104.54								
	Order Coordination for Specified Conversion Time (per LSR)			UHL	OCOSL		17.56									
	4-Wire Unbundled HDSL Loop without manual service inquiry and facility reservation - Zone 1		1	UHL	UHL4W	16.24	129.00	92.20								
	4-Wire Unbundled HDSL Loop without manual service inquiry and facility reservation - Zone 2		2	UHL	UHL4W	16.65	129.00	92.20								
	4-Wire Unbundled HDSL Loop without manual service inquiry and facility reservation - Zone 3		3	UHL	UHL4W	17.34	129.00	92.20								
	Order Coordination for Specified Conversion Time (per LSR)			UHL	OCOSL		17.56									
	CLEC to CLEC Conversion Charge without outside dispatch			UHL	UREWO		86.00	40.34								
	4-WIRE DS1 DIGITAL LOOP															
	4-Wire DS1 Digital Loop - Zone 1		1	USL	USLXX	85.70	245.16	152.98								
	4-Wire DS1 Digital Loop - Zone 2		2	USL	USLXX	194.96	245.16	152.98								
	4-Wire DS1 Digital Loop - Zone 3		3	USL	USLXX	491.94	245.16	152.98								
	Order Coordination for Specified Conversion Time (per LSR)			USL	OCOSL		17.56									
	CLEC to CLEC Conversion Charge without outside dispatch			USL	UREWO		100.93	42.98								
	4-WIRE 19.2, 56 OR 64 KBPS DIGITAL GRADE LOOP															
	4 Wire Unbundled Digital 19.2 Kbps		1	UDL	UDL19	30.99	121.86	85.48								
	4 Wire Unbundled Digital 19.2 Kbps		2	UDL	UDL19	36.78	121.86	85.48								
	4 Wire Unbundled Digital 19.2 Kbps		3	UDL	UDL19	38.92	121.86	85.48								
	4 Wire Unbundled Digital Loop 56 Kbps - Zone 1		1	UDL	UDL56	30.99	121.86	85.48								
	4 Wire Unbundled Digital Loop 56 Kbps - Zone 2		2	UDL	UDL56	36.78	121.86	85.48								
	4 Wire Unbundled Digital Loop 56 Kbps - Zone 3		3	UDL	UDL56	38.92	121.86	85.48								
	Order Coordination for Specified Conversion Time (per LSR)			UDL	OCOSL		17.56									
	4 Wire Unbundled Digital Loop 64 Kbps - Zone 1		1	UDL	UDL64	30.99	121.86	85.48								
	4 Wire Unbundled Digital Loop 64 Kbps - Zone 2		2	UDL	UDL64	36.78	121.86	85.48								
	4 Wire Unbundled Digital Loop 64 Kbps - Zone 3		3	UDL	UDL64	38.92	121.86	85.48								

CATEGORY	RATE ELEMENTS	Interim	Zone	BCS	USOC	RATES ($)					Svc Order Submitted Elec per LSR	Svc Order Submitted Manually per LSR	Incremental Charge - Manual Svc Order vs. Electronic-1st	Incremental Charge - Manual Svc Order vs. Electronic-Add'l	Incremental Charge - Manual Svc Order vs. Electronic-Disc 1st	Incremental Charge - Manual Svc Order vs. Electronic-Disc Add'l
						Rec	Nonrecurring		Nonrecurring Disconnect		OSS Rates ($)					
							First	Add'l	First	Add'l	SOMEC	SOMAN	SOMAN	SOMAN	SOMAN	SOMAN
	Order Coordination for Specified Conversion Time (per LSR)			UDL	OCOSL		17.56									
	CLEC to CLEC Conversion Charge without outside dispatch			UDL	UREWO		101.97	49.67								
2-WIRE Unbundled COPPER LOOP																
	2-Wire Unbundled Copper Loop-Designed including manual service inquiry & facility reservation - Zone 1		1	UCL	UCLPB	12.29	116.18	67.46								
	2-Wire Unbundled Copper Loop-Designed including manual service inquiry & facility reservation - Zone 2		2	UCL	UCLPB	14.09	116.18	67.46								
	2 Wire Unbundled Copper Loop-Designed including manual service inquiry & facility reservation - Zone 3		3	UCL	UCLPB	15.75	116.18	67.46								
	Order Coordination for Unbundled Copper Loops (per loop)			UCL	UCLMC		7.92	7.92								
	2-Wire Unbundled Copper Loop-Designed without manual service inquiry and facility reservation - Zone 1		1	UCL	UCLPW	12.29	91.92	55.12								
	2-Wire Unbundled Copper Loop-Designed without manual service inquiry and facility reservation - Zone 2		2	UCL	UCLPW	14.09	91.92	55.12								
	2-Wire Unbundled Copper Loop-Designed without manual service inquiry and facility reservation - Zone 3		3	UCL	UCLPW	15.75	91.92	55.12								
	Order Coordination for Unbundled Copper Loops (per loop)			UCL	UCLMC		7.92	7.92								
	CLEC to CLEC Conversion Charge without outside dispatch (UCL Des)			UCL	UREWO		91.92	42.47								
4-WIRE COPPER LOOP																
	4-Wire Copper Loop-Designed including manual service inquiry and facility reservation - Zone 1		1	UCL	UCL4S	22.27	139.69	90.96								
	4-Wire Copper Loop-Designed including manual service inquiry and facility reservation - Zone 2		2	UCL	UCL4S	18.95	139.69	90.96								
	4-Wire Copper Loop-Designed including manual service inquiry and facility reservation - Zone 3		3	UCL	UCL4S	10.99	139.69	90.96								
	Order Coordination for Unbundled Copper Loops (per loop)			UCL	UCLMC		7.92	7.92								
	4-Wire Copper Loop-Designed without manual service inquiry and facility reservation - Zone 1		1	UCL	UCL4W	22.27	115.43	78.63								
	4-Wire Copper Loop-Designed without manual service inquiry and facility reservation - Zone 2		2	UCL	UCL4W	18.95	115.43	78.63								
	4-Wire Copper Loop-Designed without manual service inquiry and facility reservation - Zone 3		3	UCL	UCL4W	10.99	115.43	78.63								
	Order Coordination for Unbundled Copper Loops (per loop)			UCL	UCLMC		7.92	7.92								
	CLEC to CLEC Conversion Charge without outside dispatch (UCL Des)			UCL	UREWO		91.92	42.47								
LOOP MODIFICATION																
	Unbundled Loop Modification, Removal of Load Coils - 2 Wire pair less than or equal to 18k ft, per Unbundled Loop			UAL, UHL, UCL, UEQ, ULS, UEA, UEANL, UEPSR, UEPSB	ULM2L		0.00	0.00								
	Unbundled Loop Modification Removal of Load Coils - 4 Wire less than or equal to 18K ft, per Unbundled Loop			UHL, UCL, UEA	ULM4L		0.00	0.00								
	Unbundled Loop Modification Removal of Bridged Tap Removal, per unbundled loop			UAL, UHL, UCL, UEQ, ULS, UEA, UEANL, UEPSR, UEPSB	ULMBT		12.15	12.15								
SUB-LOOPS																
	Sub-Loop Distribution															
	Sub-Loop - Per Cross Box Location - CLEC Feeder Facility Set-Up	I		UEANL	USBSA		144.09	144.09								
	Sub-Loop - Per Cross Box Location - Per 25 Pair Panel Set-Up	I		UEANL	USBSB		10.99	10.99								
	Sub-Loop - Per Building Equipment Room - CLEC Feeder Facility Set-Up	I		UEANL	USBSC		86.16	86.16								
	Sub-Loop - Per Building Equipment Room - Per 25 Pair Panel Set-Up	I		UEANL	USBSD		27.13	27.13								
	Sub-Loop Distribution Per 2-Wire Analog Voice Grade Loop - Zone 1	I	1	UEANL	USBN2	7.57	63.89	30.06								
	Sub-Loop Distribution Per 2-Wire Analog Voice Grade Loop - Zone 2	I	2	UEANL	USBN2	12.75	63.89	30.06								
	Sub-Loop Distribution Per 2-Wire Analog Voice Grade Loop - Zone 3	I	3	UEANL	USBN2	21.45	63.89	30.06								

CATEGORY	RATE ELEMENTS	Interim	Zone	BCS	USOC	RATES ($)					Svc Order Submitted Elec per LSR	Svc Order Submitted Manually per LSR	Incremental Charge - Manual Svc Order vs. Electronic-1st	Incremental Charge - Manual Svc Order vs. Electronic-Add'l	Incremental Charge - Manual Svc Order vs. Electronic-Disc 1st	Incremental Charge - Manual Svc Order vs. Electronic-Disc Add'l
						Rec	Nonrecurring		Nonrecurring Disconnect		OSS Rates ($)					
							First	Add'l	First	Add'l	SOMEC	SOMAN	SOMAN	SOMAN	SOMAN	SOMAN
	Order Coordination for Unbundled Sub-Loops, per sub-loop pair			UEANL	USBMC		7.92	7.92								
	Sub-Loop Distribution Per 4-Wire Analog Voice Grade Loop - Zone 1		1	UEANL	USBN4	11.76	76.75	42.92								
	Sub-Loop Distribution Per 4-Wire Analog Voice Grade Loop - Zone 2		2	UEANL	USBN4	16.84	76.75	42.92								
	Sub-Loop Distribution Per 4-Wire Analog Voice Grade Loop - Zone 3		3	UEANL	USBN4	19.27	76.75	42.92								
	Order Coordination for Unbundled Sub-Loops, per sub-loop pair			UEANL	USBMC		7.92	7.92								
	Sub-Loop 2-Wire Intrabuilding Network Cable (INC)	I		UEANL	USBR2	2.91	51.48	17.65								
	Order Coordination for Unbundled Sub-Loops, per sub-loop pair			UEANL	USBMC		7.92	7.92								
	Sub-Loop 4-Wire Intrabuilding Network Cable (INC)	I		UEANL	USBR4	6.58	57.54	23.71								
	Order Coordination for Unbundled Sub-Loops, per sub-loop pair			UEANL	USBMC		7.92	7.92								
	Loop Testing - Basic 1st Half Hour			UEANL	URET1		33.17	33.17								
	Loop Testing - Basic Additional Half Hour			UEANL	URETA		19.28	19.28								
	2 Wire Copper Unbundled Sub-Loop Distribution - Zone 1	I	1	UEF	UCS2X	6.26	63.89	30.06								
	2 Wire Copper Unbundled Sub-Loop Distribution - Zone 2	I	2	UEF	UCS2X	10.07	63.89	30.06								
	2 Wire Copper Unbundled Sub-Loop Distribution - Zone 3	I	3	UEF	UCS2X	12.70	63.89	30.06								
	Order Coordination for Unbundled Sub-Loops, per sub-loop pair			UEF	USBMC		7.92	7.92								
	4 Wire Copper Unbundled Sub-Loop Distribution - Zone 1	I	1	UEF	UCS4X	8.03	76.75	42.92								
	4 Wire Copper Unbundled Sub-Loop Distribution - Zone 2	I	2	UEF	UCS4X	10.71	76.75	42.92								
	4 Wire Copper Unbundled Sub-Loop Distribution - Zone 3	I	3	UEF	UCS4X	6.08	76.75	42.92								
	Order Coordination for Unbundled Sub-Loops, per sub-loop pair			UEF	USBMC		7.92	7.92								
	Loop Testing - Basic 1st Half Hour			UEF	URET1		33.17	33.17								
	Loop Testing - Basic Additional Half Hour			UEF	URETA		19.28	19.28								
	Unbundled Network Terminating Wire (UNTW)															
	Unbundled Network Terminating Wire (UNTW) per Pair			UENTW	UENPP	0.3454	14.72	14.72								
	Network Interface Device (NID)															
	Network Interface Device (NID) - 1-2 lines			UENTW	UND12		42.26	27.83								
	Network Interface Device (NID) - 1-6 lines			UENTW	UND16		62.86	48.43								
	Network Interface Device Cross Connect - 2 W			UENTW	UNDC2		5.73	5.73								
	Network Interface Device Cross Connect - 4W			UENTW	UNDC4		5.73	5.73								
UNE OTHER, PROVISIONING ONLY - NO RATE																
	NID - Dispatch and Service Order for NID installation			UENTW	UNDBX	0.00	0.00									
	UNTW Circuit Id Establishment, Provisioning Only - No Rate			UENTW	UENCE	0.00	0.00									
	Unbundled Contract Name, Provisioning Only - No Rate			UEANL,UEF,UEQ,UENTW	UNECN	0.00	0.00									
UNE OTHER, PROVISIONING ONLY - NO RATE																
	Unbundled Contact Name, Provisioning Only - no rate			UAL,UCL,UDC,UDL,UDN,UEA,UHL,USL	UNECN	0.00	0.00									
	Unbundled Sub-Loop Feeder-2 Wire Cross Box Jumper - no rate			UEA,UDN,UCL,UDC	USBFQ	0.00	0.00									
	Unbundled Sub-Loop Feeder-4 Wire Cross Box Jumper - no rate			UEA,USL,UCL,UDL	USBFR	0.00	0.00									
	Unbundled DS1 Loop - Superframe Format Option - no rate			USL	CCOSF	0.00	0.00									
	Unbundled DS1 Loop - Expanded Superframe Format option - no rate			USL	CCOEF	0.00	0.00									
HIGH CAPACITY UNBUNDLED LOCAL LOOP																
	High Capacity Unbundled Local Loop - DS3 - Per Mile per month			UE3	1L5ND	10.04										
	High Capacity Unbundled Local Loop - DS3 - Facility Termination per month			UE3	UE3PX	362.34	504.229	294.745								
	High Capacity Unbundled Local Loop - STS-1 - Per Mile per month			UDLSX	1L5ND	10.04										
	High Capacity Unbundled Local Loop - STS-1 - Facility Termination per month			UDLSX	UDLS1	374.56	504.229	294.745								
LOOP MAKE-UP																

CATEGORY	RATE ELEMENTS	Interim	Zone	BCS	USOC	RATES ($)					Svc Order Submitted Elec per LSR	Svc Order Submitted Manually per LSR	Incremental Charge - Manual Svc Order vs. Electronic-1st	Incremental Charge - Manual Svc Order vs. Electronic-Add'l	Incremental Charge - Manual Svc Order vs. Electronic-Disc 1st	Incremental Charge - Manual Svc Order vs. Electronic-Disc Add'l
						Rec	Nonrecurring		Nonrecurring Disconnect		OSS Rates ($)					
							First	Add'l	First	Add'l	SOMEC	SOMAN	SOMAN	SOMAN	SOMAN	SOMAN
	Loop Makeup - Preordering Without Reservation, per working or spare facility queried (Manual).			UMK	UMKLW		23.29	23.29								
	Loop Makeup - Preordering With Reservation, per spare facility queried (Manual).			UMK	UMKLP		24.70	24.70								
	Loop Makeup--With or Without Reservation, per working or spare facility queried (Mechanized)			UMK	UMKMQ		0.19	0.19								
LINE SPLITTING																
LINE SPLITTING																
END USER ORDERING-CENTRAL OFFICE BASED																
	Line Splitting - per line activation DLEC owned splitter			UEPSR UEPSB	UREOS	0.61										
	Line Splitting - per line activation BST owned - physical			UEPSR UEPSB	UREBP	0.61	17.97	10.29								
	Line Splitting - per line activation BST owned - virtual			UEPSR UEPSB	UREBV	0.61	17.97	10.29								
MAINTENANCE OF SERVICE																
NOTE: The Expedite charge will be maintained commensurate with BellSouth's FCC No.1 Tariff, Section 13.3.1 as applicable.																
	No Trouble Found - per 1/2 hour increments - Basic						80.00	55.00								
	No Trouble Found - per 1/2 hour increments - Overtime						90.00	65.00								
	No Trouble Found - per 1/2 hour increments - Premium						100.00	75.00								
UNBUNDLED DEDICATED TRANSPORT																
INTEROFFICE CHANNEL - DEDICATED TRANSPORT																
	Interoffice Channel - Dedicated Transport - 2-Wire Voice Grade - Per Mile per month			U1TVX	1L5XX	0.013										
	Interoffice Channel - Dedicated Transport- 2- Wire Voice Grade - Facility Termination			U1TVX	U1TV2	22.60	39.36	26.62								
	Interoffice Channel - Dedicated Transpor t- 2-Wire Voice Grade Rev Bat. - Per Mile per month			U1TVX	1L5XX	0.013										
	Interoffice Channel - Dedicated Transport- 2- Wire VG Rev Bat. - Facility Termination			U1TVX	U1TR2	22.60	39.36	26.62								
	Interoffice Channel - Dedicated Transport - 4-Wire Voice Grade - Per Mile per month			U1TVX	1L5XX	0.013										
	Interoffice Channel - Dedicated Transport - 4- Wire Voice Grade - Facility Termination			U1TVX	U1TV4	19.81	39.36	26.62								
	Interoffice Channel - Dedicated Transport - 56 kbps - per mile per month			U1TDX	1L5XX	0.013										
	Interoffice Channel - Dedicated Transport - 56 kbps - Facility Termination			U1TDX	U1TD5	15.61	39.37	26.62								
	Interoffice Channel - Dedicated Transport - 64 kbps - per mile per month			U1TDX	1L5XX	0.013										
	Interoffice Channel - Dedicated Transport - 64 kbps - Facility Termination			U1TDX	U1TD6	15.61	39.37	26.62								
	Interoffice Channel - Dedicated Channel - DS1 - Per Mile per month			U1TD1	1L5XX	0.2652										
	Interoffice Channel - Dedicated Tranport - DS1 - Facility Termination			U1TD1	U1TF1	70.47	86.69	79.44								
	Interoffice Channel - Dedicated Transport - DS3 - Per Mile per month			U1TD3	1L5XX	6.04										
	Interoffice Channel - Dedicated Transport - DS3 - Facility Termination per month			U1TD3	U1TF3	850.45	270.69	158.05								
	Interoffice Channel - Dedicated Transport - STS-1 - Per Mile per month			U1TS1	1L5XX	6.04										
	Interoffice Channel - Dedicated Transport - STS-1 - Facility Termination			U1TS1	U1TFS	830.19	270.69	158.05								
DARK FIBER																
	Dark Fiber, Four Fiber Strands, Per Route Mile or Fraction Thereof per month - Local Channel			UDF, UDFCX	1L5DC	60.06										
	Dark Fiber, Four Fiber Strands, Per Route Mile or Fraction Thereof per month - Interoffice Channel			UDF, UDFCX	1L5DF	25.28										
	NRC Dark Fiber - Interoffice Channel			UDF, UDFCX	UDF14		620.60	133.88								
	Dark Fiber, Four Fiber Strands, Per Route Mile or Fraction Thereof per month - Local Loop			UDF, UDFCX	1L5DL	60.06										
8XX ACCESS TEN DIGIT SCREENING																
	8XX Access Ten Digit Screening, Per Call					0.0006387										
	8XX Access Ten Digit Screening, w/ 8XX No. Delivery, per query					0.0006387										

UNBUNDLED NETWORK ELEMENTS - Louisiana

Attachment: 2 Ex. A

CATEGORY	RATE ELEMENTS	Interim	Zone	BCS	USOC	RATES ($) Rec	Nonrecurring First	Nonrecurring Add'l	Nonrecurring Disconnect First	Nonrecurring Disconnect Add'l	Svc Order Submitted Elec per LSR	Svc Order Submitted Manually per LSR	Incremental Charge - Manual Svc Order vs. Electronic-1st	Incremental Charge - Manual Svc Order vs. Electronic-Add'l	Incremental Charge - Manual Svc Order vs. Electronic-Disc 1st	Incremental Charge - Manual Svc Order vs. Electronic-Disc Add'l
											OSS Rates ($)					
							First	Add'l	First	Add'l	SOMEC	SOMAN	SOMAN	SOMAN	SOMAN	SOMAN
	8XX Access Ten Digit Screening, w/ POTS No. Delivery, per query					0.0006387										
LINE INFORMATION DATA BASE ACCESS (LIDB)																
	LIDB Common Transport Per Query					0.0000221										
	LIDB Validation Per Query					0.0135077										
	LIDB Originating Point Code Establishment or Change			OQU	NRBPX		33.33									
CALLING NAME (CNAM) SERVICE																
	CNAM for DB Owners, Per Query					0.0010217										
	CNAM for Non DB Owners, Per Query					0.0010217										
LNP Query Service																
	LNP Charge Per query					0.0008559										
	LNP Service Establishment Manual						12.16									
	LNP Service Provisioning with Point Code Establishment						576.33	294.43								
SELECTIVE ROUTING																
	Selective Routing Per Unique Line Class Code Per Request Per Switch						82.25	82.25								
VIRTUAL COLLOCATION																
	Virtual Collocation-2 Wire Cross Connects (Loop) for Line Splitting			UEPSR UEPSB	VE1LS	0.0296	11.94	11.46	0.00	0.00						
PHYSICAL COLLOCATION																
	Physical Collocation-2 Wire Cross Connects (Loop) for Line Splitting			UEPSR UEPSB	PE1LS	0.0318	11.94	11.46	0.00	0.00						
AIN SELECTIVE CARRIER ROUTING																
	Regional Service Establishment						100,209.33									
	End Office Establishment						164.29	164.29								
	Query NRC, per query					0.0030293										
AIN - BELLSOUTH AIN SMS ACCESS SERVICE																
	AIN SMS Access Service - Service Establishment, Per State, Initial Setup			A1N	CAMSE		38.30	38.30								
	AIN SMS Access Service - Port Connection - Dial/Shared Access			A1N	CAMDP		7.60	7.60								
	AIN SMS Access Service - Port Connection - ISDN Access			A1N	CAM1P		7.60	7.60								
	AIN SMS Access Service - User Identification Codes - Per User ID Code			A1N	CAMAU		33.99	33.99								
	AIN SMS Access Service - Security Card, Per User ID Code, Initial or Replacement			A1N	CAMRC		41.39	41.39								
	AIN SMS Access Service - Storage, Per Unit (100 Kilobytes)					0.0022										
	AIN SMS Access Service - Session, Per Minute					0.5795										
	AIN SMS Access Service - Company Performed Session, Per Minute					0.8104										
SIGNALING (CCS7)																
	CCS7 Signaling Usage, Per TCAP Message					0.000064										
	CCS7 Signaling Usage, Per ISUP Message					0.000016										
911 PBX LOCATE																
	911 PBX LOCATE DATABASE CAPABILITY															
	Service Establishment per CLEC per End User Account			9PBDC	9PBEU		1,819.00									
	Changes to TN Range or Customer Profile			9PBDC	9PBTN		181.99									
	Per Telephone Number (Monthly)			9PBDC	9PBMM	0.07										
	Change Company (Service Provider) ID			9PBDC	9PBPC		534.22									
	PBX Locate Service Support per CLEC (Monthlt)			9PBDC	9PBMR	178.58										
	Service Order Charge			9PBDC	9PBSC		15.20									
	911 PBX LOCATE TRANSPORT COMPONENT															
	See Att 3															
ENHANCED EXTENDED LINK (EELs)																
	NOTE: The monthly recurring and non-recurring charges below will apply and the Switch-As-Is Charge will not apply for UNE combinations provisioned as ' Ordinarily Combined' Network Elements.															
	NOTE: The monthly recurring and the Switch-As-Is Charge and not the non-recurring charges below will apply for UNE combinations provisioned as ' Currently Combined' Network Elements.															
	2-WIRE VOICE GRADE LOOP FOR USE IN A COMBINATION															
	2-Wire VG Loop (SL2) in Combination - Zone 1		1	UNCVX	UEAL2	14.93	94.21	45.09								
	2-Wire VG Loop (SL2) in Combination - Zone 2		2	UNCVX	UEAL2	25.35	94.21	45.09								
	2-Wire VG Loop (SL2) in Combination - Zone 3		3	UNCVX	UEAL2	50.46	94.21	45.09								
	Voice Grade COCI - Per Month			UNCVX	1D1VG	0.6497	5.91	4.26								
	4-WIRE VOICE GRADE LOOP FOR USE IN A COMBINATION															
	4-Wire Analog Voice Grade Loop in Combination - Zone 1		1	UNCVX	UEAL4	30.81	94.21	45.09								
	4-Wire Analog Voice Grade Loop in Combination - Zone 2		2	UNCVX	UEAL4	38.32	94.21	45.09								

CATEGORY	RATE ELEMENTS	Interim	Zone	BCS	USOC	RATES ($)					Svc Order Submitted Elec per LSR	Svc Order Submitted Manually per LSR	Incremental Charge - Manual Svc Order vs. Electronic-1st	Incremental Charge - Manual Svc Order vs. Electronic-Add'l	Incremental Charge - Manual Svc Order vs. Electronic-Disc 1st	Incremental Charge - Manual Svc Order vs. Electronic-Disc Add'l
						Rec	Nonrecurring		Nonrecurring Disconnect		OSS Rates ($)					
							First	Add'l	First	Add'l	SOMEC	SOMAN	SOMAN	SOMAN	SOMAN	SOMAN
	4-Wire Analog Voice Grade Loop in Combination - Zone 3		3	UNCVX	UEAL4	60.39	94.21	45.09								
	Voice Grade COCI in combination - per month			UNCVX	1D1VG	0.6497	5.91	4.26								
	4-WIRE 56 KBPS DIGITAL LOOP FOR USE IN A COMBINATION															
	4-Wire 56Kbps Digital Grade Loop in Combination - Zone 1		1	UNCDX	UDL56	30.99	94.21	45.09								
	4-Wire 56Kbps Digital Grade Loop in Combination - Zone 2		2	UNCDX	UDL56	36.78	94.21	45.09								
	4-Wire 56Kbps Digital Grade Loop in Combination - Zone 3		3	UNCDX	UDL56	38.92	94.21	45.09								
	OCU-DP COCI (data) per month (2.4-64kbs)			UNCDX	1D1DD	1.38	5.91	4.26								
	4-WIRE 64 KBPS DIGITAL LOOP FOR USE IN A COMBINATI\ON															
	4-Wire 64Kbps Digital Grade Loop in Combination - Zone 1		1	UNCDX	UDL64	30.99	94.21	45.09								
	4-Wire 64Kbps Digital Grade Loop in Combination - Zone 2		2	UNCDX	UDL64	36.78	94.21	45.09								
	4-Wire 64Kbps Digital Grade Loop in Combination - Zone 3		3	UNCDX	UDL64	38.92	94.21	45.09								
	OCU-DP COCI (data) - in combination - per month (2.4-64kbs)			UNCDX	1D1DD	1.38	5.91	4.26								
	2-WIRE ISDN LOOP FOR USE IN COMBINATION															
	2-Wire ISDN Loop in Combination - Zone 1		1	UNCNX	U1L2X	22.09	94.21	45.09								
	2-Wire ISDN Loop in Combination - Zone 2		2	UNCNX	U1L2X	35.28	94.21	45.09								
	2-Wire ISDN Loop in Combination - Zone 3		3	UNCNX	U1L2X	65.18	94.21	45.09								
	2-wire ISDN COCI (BRITE) - in combination - per month			UNCNX	UC1CA	2.96	5.91	4.26								
	4-WIRE DS1 DIGITAL LOOP FOR USE IN A COMBINATION															
	4-Wire DS1 Digital Loop in Combination - Zone 1		1	UNC1X	USLXX	85.70	169.22	100.89								
	4-Wire DS1 Digital Loop in Combination - Zone 2		2	UNC1X	USLXX	194.96	169.22	100.89								
	4-Wire DS1 Digital Loop in Combination - Zone 3		3	UNC1X	USLXX	491.94	169.22	100.89								
	DS1 COCI in combination per month			UNC1X	UC1D1	11.78	5.91	4.26								
	2 WIRE VOICE GRADE INTEROFFICE TRANSPORT FOR USE IN A COMBINATION															
	Interoffice Transport - 2-wire VG - Dedicated- Per Mile Per Month			UNCVX	1L5XX	0.013										
	Interoffice Transport - 2-wire VG - Dedicated - Facility Termination per month			UNCVX	U1TV2	22.60	72.60	41.75								
	4 WIRE VOICE GRADE INTEROFFICE TRANSPORT FOR USE IN A COMBINATION															
	Interoffice Transport - 4-wire VG - Dedicated - Per Mile Per Month			UNCVX	1L5XX	0.013										
	Interoffice Transport - 4-wire VG - Dedicated - Facility Termination per month			UNCVX	U1TV4	19.81	72.60	41.75								
	DS1 INTEROFFICE TRANSPORT FOR COMBINATION															
	Interoffice Transport - Dedicated - DS1 combination - Per Mile per month			UNC1X	1L5XX	0.2652										
	Interoffice Transport - Dedicated - DS1 combination - Facility Termination per month			UNC1X	U1TF1	70.47	143.58	103.88								
	1/0 Channelization System in combination Per Month			UNC1X	MQ1	105.09	59.97	12.96								
	DS3 INTEROFFICE TRANSPORT FOR USE IN A COMBINATION															
	Interoffice Transport - Dedicated - DS3 combination - Per Mile Per Month			UNC3X	1L5XX	6.04										
	Interoffice Transport - Dedicated - DS3 - Facility Termination per month			UNC3X	U1TF3	850.45	270.69	158.05								
	STS-1 INTEROFFICE TRANSPORT FOR USE IN COMBINATION															
	Interoffice Transport - Dedicated - STS-1 combination - Per Mile Per Month			UNCSX	1L5XX	6.04										
	Interoffice Transport - Dedicated - STS-1 combination - Facility Termination per month			UNCSX	U1TFS	830.19	270.69	158.05								
	4-WIRE 56 KBPS DIGITAL LOOP WITH 56 KBPS INTEROFFICE TRANSPORT															
	4-wire 56 kbps Local Loop in combination - Zone 1		1	UNCDX	UDL56	30.99	94.21	45.09								
	4-wire 56 kbps Local Loop in combination - Zone 2		2	UNCDX	UDL56	36.78	94.21	45.09								
	4-wire 56 kbps Local Loop in combination - Zone 3		3	UNCDX	UDL56	38.92	94.21	45.09								
	Interoffice Transport - Dedicated - 4-wire 56 kbps combination - Per Mile per month			UNCDX	1L5XX	0.013										
	Interoffice Transport - Dedicated - 4-wire 56 kbps combination - Facility Termination per month			UNCDX	U1TD5	15.61	72.60	41.75								
	4-WIRE 64 KBPS DIGITAL EXTENDED LOOP WITH 64 KBPS INTEROFFICE TRANSPORT															
	4-wire 64 kbps Lcoal Loop in Combination - Zone 1		1	UNCDX	UDL64	30.99	94.21	45.09								
	4-wire 64 kbps Lcoal Loop in Combination - Zone 2		2	UNCDX	UDL64	36.78	94.21	45.09								
	4-wire 64 kbps Lcoal Loop in Combination - Zone 3		3	UNCDX	UDL64	38.92	94.21	45.09								
	Interoffice Transport - Dedicated - 4-wire 64 kbps combination - Per Mile per month			UNCDX	1L5XX	0.013										
	Interoffice Transport - Dedicated - 4-wire 64 kbps combination - Facility Termination per month			UNCDX	U1TD6	15.61	72.60	41.75								

UNBUNDLED NETWORK ELEMENTS - Louisiana

Attachment: 2 Ex. A

CATEGORY	RATE ELEMENTS	Interim	Zone	BCS	USOC	RATES ($) Rec	Nonrecurring First	Nonrecurring Add'l	Nonrecurring Disconnect First	Nonrecurring Disconnect Add'l	Svc Order Submitted Elec per LSR	Svc Order Submitted Manually per LSR	Incremental Charge - Manual Svc Order vs. Electronic-1st	Incremental Charge - Manual Svc Order vs. Electronic-Add'l	Incremental Charge - Manual Svc Order vs. Electronic-Disc 1st	Incremental Charge - Manual Svc Order vs. Electronic-Disc Add'l
											OSS Rates ($)					
							First	Add'l	First	Add'l	SOMEC	SOMAN	SOMAN	SOMAN	SOMAN	SOMAN
	4-WIRE 56 KBPS DIGITAL EXTENDED LOOP WITH DS0 INTEROFFICE TRANSPORT															
	4-wire 56 kbps Local Loop in combination - Zone 1		1	UNCDX	UDL56	30.99	94.21	45.09								
	4-wire 56 kbps Local Loop in combination - Zone 2		2	UNCDX	UDL56	36.78	94.21	45.09								
	4-wire 56 kbps Local Loop in combination - Zone 3		3	UNCDX	UDL56	38.92	94.21	45.09								
	4-wiree 56 kbps Interoffice Transport - Dedicated - Per Mile per month			UNCDX	1L5XX	0.013										
	4-wire 56 kbps Interoffice Transport - Dedicated - Facility Termination per month			UNCDX	U1TD5	15.61	72.60	41.75								
	4-WIRE 64 KBPS DIGITAL EXTENDED LOOP WITH DS0 INTEROFFICE TRANSPORT															
	4-wire 64 kbps Local Loop in combination - Zone 1		1	UNCDX	UDL64	30.99	94.21	45.09								
	4-wire 64 kbps Local Loop in combination - Zone 2		2	UNCDX	UDL64	36.78	94.21	45.09								
	4-wire 64 kbps Local Loop in combination - Zone 3		3	UNCDX	UDL64	38.92	94.21	45.09								
	I4-wire 65 kbps Interoffice Transport - Dedicated - Per Mile per month			UNCDX	1L5XX	0.013										
	4-wire 64 kbps Interoffice Transport - Dedicated - Facility Termination per month			UNCDX	U1TD6	15.61	72.60	41.75								
	DS1 DIGITAL LOOP AND DS1 INTERFOFFICE TRANSPORT															
	4-Wire DS1 Digital Loop in Combination - Zone 1		1	UNC1X	USLXX	85.70	169.22	100.89								
	4-Wire DS1 Digital Loop in Combination - Zone 2		2	UNC1X	USLXX	194.96	169.22	100.89								
	4-Wire DS1 Digital Loop in Combination - Zone 3		3	UNC1X	USLXX	491.94	169.22	100.89								
	Interoffice Transport - Dedicated - DS1 combination - Per Mile per month			UNC1X	1L5XX	0.2652										
	Interoffice Transport - Dedicated - DS1 combination - Facility Termination per month			UNC1X	U1TF1	70.47	143.58	103.88								
	DS3 DIGITAL LOOP WITH DEDICATED DS3 INTEROFFICE TRANSPORT															
	DS3 Local Loop in combination - per mile per month			UNC3X	1L5ND	11.546										
	DS3 Local Loop in combination - Facility Termination per month			UNC3X	UE3PX	416.691	504.229	294.745								
	Interoffice Transport - Dedicated - DS3 - Per Mile per month			UNC3X	1L5XX	6.04										
	Interoffice Transport - Dedicated - DS3 combination - Facility Termination per month			UNC3X	U1TF3	850.45	270.69	158.05								
	STS-1 DIGITAL LOOP WITH DEDICATED STS-1 INTEROFFICE TRANSPORT															
	STS-1 Local Lolp in combination - per mile per month			UNCSX	1L5ND	11.546										
	STS-1 Local Loop in combination - Facility Termination per month			UNCSX	UDLS1	430.744	504.229	294.745								
	Interoffice Transport - Dedicated - STS-1 combination - per mile per month			UNCSX	1L5XX	6.04										
	Interoffice Transport - Dedicated - STS-1 combination - Facility Termination per month			UNCSX	U1TFS	830.19	270.69	158.05								
ADDITIONAL NETWORK ELEMENTS																
	When used as a part of a currently combined facility, the non-recurrng charges do not apply, but a Switch As Is charge does apply.															
	When used as ordinarily combined network elements in All States, the non-recurring charges apply and the Switch As Is Charge does not.															
	Commingling Authorization			UNCVX, UNCDX, UNC1X, UNC3X, UNCSX, U1TD1, U1TD3, U1TS1, UE3, UDLSX, U1TVX, U1TDX, U1TUB	CMGAU	0.00	0.00	0.00	0.00	0.00						
	Nonrecurring Currently Combined Network Elements "Switch As Is" Charge (One applies to each combination)															
	Nonrecurring Currently Combined Network Elements Switch -As-Is Charge			UNCVX, UNCDX, UNC1X, UNC3X, UNCSX	UNCCC		5.43	5.43								
	Optional Features & Functions:															
	Clear Channel Capability Extended Frame Option - per DS1	I		U1TD1, ULDD1,UNC1X	CCOEF		0.00	0.00	0.00	0.00						
	Clear Channel Capability Super FrameOption - per DS1	I		U1TD1, ULDD1,UNC1X	CCOSF		0.00	0.00	0.00	0.00						
	Clear Channel Capability (SF/ESF) Option - Subsequent Activity - per DS1	I		ULDD1, U1TD1, UNC1X, USL	NRCCC		184.65	23.79	1.97	0.77						
	C-bit Parity Option - Subsequent Activity - per DS3	i		U1TD3, ULDD3, UE3, UNC3X	NRCC3		218.78	7.66	0.7263	0.00						
	MULTIPLEXERS															
	DS1 to DS0 Channel System per month			UNC1X	MQ1	105.09	59.97	12.96								

UNBUNDLED NETWORK ELEMENTS - Louisiana

Attachment: 2 Ex. A

CATEGORY	RATE ELEMENTS	Interim	Zone	BCS	USOC	RATES ($)					Svc Order Submitted Elec per LSR	Svc Order Submitted Manually per LSR	Incremental Charge - Manual Svc Order vs. Electronic-1st	Incremental Charge - Manual Svc Order vs. Electronic-Add'l	Incremental Charge - Manual Svc Order vs. Electronic-Disc 1st	Incremental Charge - Manual Svc Order vs. Electronic-Disc Add'l
						Rec	Nonrecurring		Nonrecurring Disconnect		OSS Rates ($)					
							First	Add'l	First	Add'l	SOMEC	SOMAN	SOMAN	SOMAN	SOMAN	SOMAN
	OCU-DP COCI (data) - DS1 to DS0 Channel System - per month (2.4-64kbs) used for a Local Loop			UDL	1D1DD	1.38	6.39	4.58								
	OCU-DP COCI (data) - DS1 to DS0 Channel System - per month (2.4-64kbs) used for connection to a channelized DS1 Local Channel in the same SWC as collocation			U1TUD	1D1DD	1.38	6.39	4.58								
	2-wire ISDN COCI (BRITE) - DS1 to DS0 Channel Systsem - per month for a Local Loop			UDN	UC1CA	2.96	6.39	4.58								
	2-wire ISDN COCI (BRITE) - DS1 to DS0 Channel Systsem - per month used for connection to a channelized DS1 Local Channel in the same SWC as collocation			U1TUB	UC1CA	2.96	6.39	4.58								
	Voice Grade COCI - DS1 to DS0 Channel System - per month used for a Local Loop			UEA	1D1VG	0.6497	6.39	4.58								
	Voice Grade COCI - DS1 to DS0 Channel System - per month used for connection to a channelized DS1 Local Channel in the same SWC as collocation			U1TUC	1D1VG	0.6497	6.39	4.58								
	DS3 to DS1 Channel System per month			UNC3X	MQ3	201.48	107.05	91.25								
	STS-1 to DS1 Channel System per month			UNCSX	MQ3	201.48	107.05	91.25								
	DS1 COCI used with Loop per month			USL	UC1D1	11.78	6.39	4.58								
	DS1 COCI (used for connection to a channelized DS1 Local Channel in the same SWC as collocation) per month			U1TUA	UC1D1	11.78	6.39	4.58								
	DS1 COCI used with Interoffice Channel per month			U1TD1	UC1D1	11.78	6.39	4.58								
	DS3 Interface Unit (DS1 COCI) used with Local Channel per month			ULDD1	UC1D1	11.78	6.39	4.58								
UNBUNDLED LOCAL EXCHANGE SWITCHING(PORTS)																
	The Exchange Switching Port Rates Reflected Here Apply to Embedded Base Switching Ports as of March 10, 2005 and Consist of the TELRIC Cost Based Rates Plus $1.00 in Accordance with the TRRO.															
	Exchange Ports															
	NOTE: Although the Port Rate includes all available features in GA, KY, LA & TN, the desired features will need to be ordered using retail USOCs															
	2-WIRE VOICE GRADE LINE PORT RATES (RES)															
	Exchange Ports - 2-Wire Analog Line Port- Res.			UEPSR	UEPRL	2.52	2.31	2.21								
	Exchange Ports - 2-Wire Analog Line Port with Caller ID - Res.			UEPSR	UEPRC	2.52	2.31	2.21								
	Exchange Ports - 2-Wire Analog Line Port outgoing only - Res.			UEPSR	UEPRO	2.52	2.31	2.21								
	Exchange Ports - 2-Wire VG unbundled LA extended local dialing parity Port with Caller ID - Res.			UEPSR	UEPAS	2.52	2.31	2.21								
	Exchange Ports - 2-Wire VG unbundled Louisiana Area Plus with Caller ID - Res (RUL)			UEPSR	UEPAG	2.52	2.31	2.21								
	Exchange Ports - 2-Wire VG unbundled res, low usage line port with Caller ID (LUM)			UEPSR	UEPAP	2.52	2.31	2.21								
	Exchange Ports - 2-Wire VG Louisiana Residence Dialing Plan without Caller ID			UEPSR	UEPWG	2.52	2.31	2.21								
	Exchange Ports - 2-Wire VG Louisiana Residence Area Plus without Caller ID			UEPSR	UEPRQ	2.52	2.31	2.21								
	2-Wire voice unbundled Low Usage Line Port without Caller ID Capability			UEPSR	UEPRT	2.52	2.31	2.21								
	Subsequent Activity			UEPSR	USASC	0.00	0.00	0.00								
	FEATURES															
	All Available Vertical Features			UEPSR	UEPVF	0.00	0.00	0.00								
	2-WIRE VOICE GRADE LINE PORT RATES (BUS)															
	Exchange Ports - 2-Wire Analog Line Port without Caller ID - Bus			UEPSB	UEPBL	2.52	2.31	2.21								
	Exchange Ports - 2-Wire VG unbundled Line Port with unbundled port with Caller+E484 ID - Bus.			UEPSB	UEPBC	2.52	2.31	2.21								
	Exchange Ports - 2-Wire Analog Line Port outgoing only - Bus.			UEPSB	UEPBO	2.52	2.31	2.21								
	Exchange Ports - 2-Wire VG unbundled LA extended local dialing parity Port with Caller ID - Bus.			UEPSB	UEPAX	2.52	2.31	2.21								
	Exhange Ports - 2-Wire VG unbundled incoming only port with Caller ID - Bus			UEPSB	UEPB1	2.52	2.31	2.21								
	Exchange Ports - 2-Wire VG unbundled Louisiana Bus Area Calling Port with Caller ID - Bus (BUC)			UEPSB	UEPAA	2.52	2.31	2.21								
	Exchange Ports - 2-Wire Voice Louisiana Business Dialing Plan without Caller ID			UEPSB	UEPWH	2.52	2.31	2.21								

UNBUNDLED NETWORK ELEMENTS - Louisiana

Attachment: 2 Ex. A

CATEGORY	RATE ELEMENTS	Interim	Zone	BCS	USOC	RATES ($)					Svc Order Submitted Elec per LSR	Svc Order Submitted Manually per LSR	Incremental Charge - Manual Svc Order vs. Electronic-1st	Incremental Charge - Manual Svc Order vs. Electronic-Add'l	Incremental Charge - Manual Svc Order vs. Electronic-Disc 1st	Incremental Charge - Manual Svc Order vs. Electronic-Disc Add'l
						Rec	Nonrecurring		Nonrecurring Disconnect		OSS Rates ($)					
							First	Add'l	First	Add'l	SOMEC	SOMAN	SOMAN	SOMAN	SOMAN	SOMAN
	Exchange Ports - 2-Wire Voice Louisiana Business Area Calling Port without Caller ID			UEPSB	UEPBA	2.52	2.31	2.21								
	2-Wire voice unbundled Incoming Only Port without Caller ID Capability			UEPSB	UEPBE	2.52	2.31	2.21								
	Subsequent Activity			UEPSB	USASC	0.00	0.00	0.00								
FEATURES																
	All Available Vertical Features			UEPSB	UEPVF	0.00	0.00	0.00								
EXCHANGE PORT RATES (DID & PBX)																
	2-Wire VG Unbundled 2-Way PBX Trunk - Res			UEPSE	UEPRD	2.52	30.37	14.42								
	2-Wire VG Line Side Unbundled 2-Way PBX Trunk - Bus			UEPSP	UEPPC	2.52	30.37	14.42								
	2-Wire VG Line Side Unbundled Outward PBX Trunk - Bus			UEPSP	UEPPO	2.52	30.37	14.42								
	2-Wire VG Line Side Unbundled Incoming PBX Trunk - Bus			UEPSP	UEPP1	2.52	30.37	14.42								
	2-Wire Analog Long Distance Terminal PBX Trunk - Bus			UEPSP	UEPLD	2.52	30.37	14.42								
	2-Wire Voice Unbundled 2-Way PBX Louisiana Calling Port			UEPSP	UEPL2	2.52	30.37	14.42								
	2-Wire Voice Unbundled PBX LD Terminal Ports			UEPSP	UEPLD	2.52	30.37	14.42								
	2-Wire Vice Unbundled 2-Way PBX Usage Port			UEPSP	UEPXA	2.52	30.37	14.42								
	2-Wire Voice Unbundled PBX Toll Terminal Hotel Ports			UEPSP	UEPXB	2.52	30.37	14.42								
	2-Wire Voice Unbundled PBX LD DDD Terminals Port			UEPSP	UEPXC	2.52	30.37	14.42								
	2-Wire Voice Unbundled PBX LD Terminal Switchboard Port			UEPSP	UEPXD	2.52	30.37	14.42								
	2-Wire Voice Unbundled PBX LD Terminal Switchboard IDD Capable Port			UEPSP	UEPXE	2.52	30.37	14.42								
	2-Wire Voice Unbundled 2-Way PBX Louisiana Local Optional Callling Port			UEPSP	UEPXK	2.52	30.37	14.42								
	2-Wire Voice Unbundled 2-Way PBX Hotel/Hospital Economy Administrative Calling Port			UEPSP	UEPXL	2.52	30.37	14.42								
	2-Wire Voice Unbundled 2-Way PBX Hotel/Hospital Economy Room Calling Port			UEPSP	UEPXM	2.52	30.37	14.42								
	2-Wire Voice Unbundled 1-Way Outgoing PBX Hotel/Hospital Discount Room Calling Port			UEPSP	UEPXO	2.52	30.37	14.42								
	2-Wire Voice Unbundled 1-Way Outgoing PBX Louisiana Local Discount Calling Port			UEPSP	UEPXP	2.52	30.37	14.42								
	2-Wire Voice Unbundled 1-Way Outgoing PBX Measured Port			UEPSP	UEPXS	2.52	30.37	14.42								
	Subsequent Activity			UEPSP	USASC	0.00	0.00	0.00								
FEATURES																
	All Available Vertical Features			UEPSP UEPSE	UEPVF	0.00	0.00	0.00								
NOTE: Transmission/usage charges associated with POTS circuit switched usage will also apply to circuit switched voice and/or circuit switched data transmission by B-Channels associated with 2-wire ISDN ports.																
NOTE: Access to B Channel or D Channel Packet capabilities will be available only through BFR/New Business Request Process. Rates for the packet capabilities will be determined via the Bona Fide Request/New Business Request Process.																
2-WIRE VOICE GRADE LINE PORT RATES (DID)																
	Exchange Ports - 2-Wire DID Port			UEPEX	UEPP2	9.29	115.85	18.20								
2-WIRE VOICE GRADE LINE PORT RATES (ISDN-BRI)																
	Exchange Ports - 2-Wire ISDN Port (See Notes below.)			UEPTX, UEPSX	U1PMA	11.07	70.76	51.46								
	All Features Offered			UEPTX, UEPSX	UEPVF	0.00	0.00	0.00								
	Exchange Ports - 2-Wire ISDN Port -- Channel Profiles			UEPTX, UEPSX	U1UMA	0.00	0.00	0.00								
NOTE: Transmission/usage charges associated with POTS circuit switched usage will also apply to circuit switched voice and/or circuit switched data transmission by B-Channels associated with 2-wire ISDN ports.																
NOTE: Access to B Channel or D Channel Packet capabilities will be available only through BFR/New Business Request Process. Rates for the packet capabilities will be determined via the Bona Fide Request/New Business Request Process.																
UNBUNDLED PORT with REMOTE CALL FORWARDING CAPABILITY																
UNBUNDLED REMOTE CALL FORWARDING SERVICE - RESIDENCE																
	Unbundled Remote Call Forwarding Service, Area Calling, Res			UEPVR	UERAC	2.52	2.31	2.21								
	Unbundled Remote Call Forwarding Service, Local Calling - Res			UEPVR	UERLC	2.52	2.31	2.21								
	Unbundled Remote Call Forwarding Service, InterLATA - Res			UEPVR	UERTE	2.52	2.31	2.21								
	Unbundled Remote Call Forwarding Service, IntraLATA - Res			UEPVR	UERTR	2.52	2.31	2.21								
Non-Recurring																
	Unbundled Remote Call Forwarding Service - Conversion - Switch-as-is			UEPVR	USAC2		0.10	0.10								
	Unbundled Remote Call Forwarding Service - Conversion with allowed change (PIC and LPIC)			UEPVR	USACC		0.10	0.10								
UNBUNDLED REMOTE CALL FORWARDING - Bus																
	Unbundled Remote Call Forwarding Service, Area Calling - Bus			UEPVB	UERAC	2.52	2.31	2.21								
	Unbundled Remote Call Forwarding Service, Local Calling - Bus			UEPVB	UERLC	2.52	2.31	2.21								
	Unbundled Remote Call Forwarding Service, InterLATA - Bus			UEPVB	UERTE	2.52	2.31	2.21								
	Unbundled Remote Call Forwarding Service, IntraLATA - Bus			UEPVB	UERTR	2.52	2.31	2.21								

UNBUNDLED NETWORK ELEMENTS - Louisiana

Attachment: 2 Ex. A

CATEGORY	RATE ELEMENTS	Interim	Zone	BCS	USOC	RATES ($) Rec	Nonrecurring First	Nonrecurring Add'l	Nonrecurring Disconnect First	Nonrecurring Disconnect Add'l	Svc Order Submitted Elec per LSR	Svc Order Submitted Manually per LSR	Incremental Charge - Manual Svc Order vs. Electronic-1st	Incremental Charge - Manual Svc Order vs. Electronic-Add'l	Incremental Charge - Manual Svc Order vs. Electronic-Disc 1st	Incremental Charge - Manual Svc Order vs. Electronic-Disc Add'l
							OSS Rates ($)									
											SOMEC	SOMAN	SOMAN	SOMAN	SOMAN	SOMAN
	Unbundled Remote Call Forwarding Service Expanded and Exception Local Calling			UEPVB	UERVJ	2.52	2.31	2.21								
	Non-Recurring															
	Unbundled Remote Call Forwarding Service - Conversion - Switch-as-is			UEPVB	USAC2		0.10	0.10								
	Unbundled Remote Call Forwarding Service - Conversion with allowed change (PIC and LPIC)			UEPVB	USACC		0.10	0.10								
UNBUNDLED LOCAL SWITCHING, PORT USAGE																
	End Office Switching (Port Usage)															
	End Office Switching Function, Per MOU					0.001868										
	End Office Trunk Port - Shared, Per MOU					0.00018										
	Tandem Switching (Port Usage) (Local or Access Tandem)															
	Tandem Switching Function Per MOU					0.0001067										
	Tandem Trunk Port - Shared, Per MOU					0.000222										
	Tandem Switching Function Per MOU (Melded)					0.000035296										
	Tandem Trunk Port - Shared, Per MOU (Melded)					0.000073438										
	Melded Factor: 33.08% of the Tandem Rate															
	Common Transport															
	Common Transport - Per Mile, MOU					0.0000032										
	Common Transport - Facilities Termination Per MOU					0.0003748										
UNBUNDLED PORT/LOOP COMBINATIONS - COST BASED RATES																
	>Cost Based Rates are applied where BellSouth is required by FCC and/or State Commission rule to provide Unbundled Local Switching or Switch Ports.															
	> The UNE-P Switching Port Rates Reflected in the Cost Based Section Apply to Embedded Base UNE-Ps as of March 10, 2005 and Consist of the TELRIC Cost Based Rates Plus $1.00 in Accordance with the TRRO.															
	>Features shall apply to the Unbundled Port/Loop Combination - Cost Based Rate section in the same manner as they are applied to the Stand-Alone Unbundled Port section of this Rate Exhibit.															
	>End Office and Tandem Switching Usage and Common Transport Usage rates in the Port section of this rate exhibit shall apply to all combinations of loop/port network elements except for UNE Coin Port/Loop Combinations.															
	>The first and additional Port nonrecurring charges apply to Not Currently Combined Combos. For Currently Combined Combos the nonrecurring charges shall be those identified in the Nonrecurring - Currently Combined sections.															
	2-WIRE VOICE GRADE LOOP WITH 2-WIRE LINE PORT (RES)															
	UNE Port/Loop Combination Rates															
	2-Wire VG Loop/Port Combo - Zone 1					14.13										
	2-Wire VG Loop/Port Combo - Zone 2					24.75										
	2-Wire VG Loop/Port Combo - Zone 3					50.62										
	UNE Loop Rates															
	2-Wire Voice Grade Loop (SL1) - Zone 1		1	UEPRX	UEPLX	11.77										
	2-Wire Voice Grade Loop (SL1) - Zone 2		2	UEPRX	UEPLX	22.39										
	2-Wire Voice Grade Loop (SL1) - Zone 3		3	UEPRX	UEPLX	48.26										
	2-Wire Voice Grade Line Port Rates (Res)															
	2-Wire voice unbundled port - residence			UEPRX	UEPRL	2.36	38.85	19.08								
	2-Wire voice unbundled port with Caller ID - res			UEPRX	UEPRC	2.36	38.85	19.08								
	2-Wire voice unbundled port outgoing only - res			UEPRX	UEPRO	2.36	38.85	19.08								
	2-Wire voice Grade unbundled Louisiana extended local dialing parity port with Caller ID - res			UEPRX	UEPAS	2.36	38.85	19.08								
	2-Wire voice unbundled Louisiana Area Plus with Caller ID - res (RUL)			UEPRX	UEPAG	2.36	38.85	19.08								
	2-Wire voice unbundles res, low usage line port with Caller ID (LUM)			UEPRX	UEPAP	2.36	38.85	19.08								
	2-Wire Voice Unbundled Louisiana Residence Dialing Plan without Caller ID			UEPRX	UEPWG	2.36	38.85	19.08								
	2-Wire voice unbundled Louisiana Area Plus Port without Caller ID Capability			UEPRX	UEPRQ	2.36	38.85	19.08								
	2-Wire voice unbundled Low Usage Line Port without Caller ID Capability			UEPRX	UEPRT	2.36	38.85	19.08								
	FEATURES															
	All Features Offered			UEPRX	UEPVF	0.00	0.00	0.00								
	NONRECURRING CHARGES (NRCs) - CURRENTLY COMBINED															
	2-Wire Voice Grade Loop / Line Port Combination - Conversion - Switch-as-is			UEPRX	USAC2		0.10	0.10								
	2-Wire Voice Grade Loop / Line Port Combination - Conversion - Switch with change			UEPRX	USACC		0.10	0.10								

CATEGORY	RATE ELEMENTS	Interim	Zone	BCS	USOC	RATES ($)					Svc Order Submitted Elec per LSR	Svc Order Submitted Manually per LSR	Incremental Charge - Manual Svc Order vs. Electronic-1st	Incremental Charge - Manual Svc Order vs. Electronic-Add'l	Incremental Charge - Manual Svc Order vs. Electronic-Disc 1st	Incremental Charge - Manual Svc Order vs. Electronic-Disc Add'l
						Rec	Nonrecurring		Nonrecurring Disconnect		OSS Rates ($)					
							First	Add'l	First	Add'l	SOMEC	SOMAN	SOMAN	SOMAN	SOMAN	SOMAN
	2-Wire Voice Grade Loop / Line Port Platform - Installation Charge at QuickService location - Not Conversion of Existing Service			UEPRX	URECC		0.10									
	ADDITIONAL NRCs															
	2-Wire Voice Grade Loop/Line Port Combination - Subsequent Activity			UEPRX	USAS2	0.00	0.00	0.00								
	Unbundled Miscellaneous Rate Element, Tag Loop at End User Premise			UEPRX	URETL		8.33	0.83								
	OFF/ON PREMISES EXTENSION CHANNELS															
	2 Wire Analog Voice Grade Extension Loop – Non-Design		1	UEPRX	UEAEN	12.90	36.54	16.87								
	2 Wire Analog Voice Grade Extension Loop – Non-Design		2	UEPRX	UEAEN	23.33	36.54	16.87								
	2 Wire Analog Voice Grade Extension Loop – Non-Design		3	UEPRX	UEAEN	48.43	36.54	16.87								
	2 Wire Analog Voice Grade Extension Loop – Design		1	UEPRX	UEAED	14.93	102.10	65.72								
	2 Wire Analog Voice Grade Extension Loop – Design		2	UEPRX	UEAED	25.35	102.10	65.72								
	2 Wire Analog Voice Grade Extension Loop – Design		3	UEPRX	UEAED	50.46	102.10	65.72								
	INTEROFFICE TRANSPORT															
	Interoffice Transport - Dedicated - 2 Wire Voice Grade - Facility Termination			UEPRX	U1TV2	22.60	39.36	26.62								
	Interoffice Transport - Dedicated - 2 Wire Voice Grade - Per Mile or Fraction Mile			UEPRX	U1TVM	0.013	0.00	0.00								
	2-WIRE VOICE GRADE LOOP WITH 2-WIRE LINE PORT (BUS)															
	UNE Port/Loop Combination Rates															
	2-Wire VG Loop/Port Combo - Zone 1					14.13										
	2-Wire VG Loop/Port Combo - Zone 2					24.75										
	2-Wire VG Loop/Port Combo - Zone 3					50.62										
	UNE Loop Rates															
	2-Wire Voice Grade Loop (SL1) - Zone 1		1	UEPBX	UEPLX	11.77										
	2-Wire Voice Grade Loop (SL1) - Zone 2		2	UEPBX	UEPLX	22.39										
	2-Wire Voice Grade Loop (SL1) - Zone 3		3	UEPBX	UEPLX	48.26										
	2-Wire Voice Grade Line Port (Bus)															
	2-Wire voice unbundled port without Caller ID - bus			UEPBX	UEPBL	2.36	38.85	19.08								
	2-Wire voice unbundled port with Caller + E484 ID - bus			UEPBX	UEPBC	2.36	38.85	19.08								
	2-Wire voice unbundled port outgoing only - bus			UEPBX	UEPBO	2.36	38.85	19.08								
	2-Wire voice Grade unbundled Louisiana extended local dialing parity port with Caller ID - bus			UEPBX	UEPAX	2.36	38.85	19.08								
	2-Wire voice unbundled incoming only port with Caller ID - Bus			UEPBX	UEPB1	2.36	38.85	19.08								
	2-Wire voice unbundled Louisiana Bus Area Calling Port with Caller ID (BUC)			UEPBX	UEPAA	2.36	38.85	19.08								
	2-Wire Voice Unbundled Louisiana Business Dialing Plan without Caller ID			UEPBX	UEPWH	2.36	38.85	19.08								
	2-Wire voice unbundled Louisiana Business Area Calling Port without Caller ID Capability			UEPBX	UEPBA	2.36	38.85	19.08								
	2-Wire voice unbundled Incoming Only Port without Caller ID Capability			UEPBX	UEPBE	2.36	38.85	19.08								
	FEATURES															
	All Features Offered			UEPBX	UEPVF	0.00	0.00	0.00								
	NONRECURRING CHARGES (NRCs) - CURRENTLY COMBINED															
	2-Wire Voice Grade Loop / Line Port Combination - Conversion - Switch-as-is			UEPBX	USAC2		0.10	0.10								
	2-Wire Voice Grade Loop / Line Port Combination - Conversion - Switch with change			UEPBX	USACC		0.10	0.10								
	ADDITIONAL NRCs															
	2-Wire Voice Grade Loop/Line Port Combination - Subsequent Activity			UEPBX	USAS2		0.00	0.00								
	Unbundled Miscellaneous Rate Element, Tag Loop at End User Premise			UEPBX	URETL		8.33	0.83								
	OFF/ON PREMISES EXTENSION CHANNELS															
	2 Wire Analog Voice Grade Extension Loop – Non-Design		1	UEPBX	UEAEN	12.90	36.54	16.87								
	2 Wire Analog Voice Grade Extension Loop – Non-Design		2	UEPBX	UEAEN	23.33	36.54	16.87								
	2 Wire Analog Voice Grade Extension Loop – Non-Design		3	UEPBX	UEAEN	48.43	36.54	16.87								
	2 Wire Analog Voice Grade Extension Loop – Design		1	UEPBX	UEAED	14.93	102.10	65.72								
	2 Wire Analog Voice Grade Extension Loop – Design		2	UEPBX	UEAED	25.35	102.10	65.72								
	2 Wire Analog Voice Grade Extension Loop – Design		3	UEPBX	UEAED	50.46	102.10	65.72								
	INTEROFFICE TRANSPORT															

CATEGORY	RATE ELEMENTS	Interim	Zone	BCS	USOC	RATES ($)					Svc Order Submitted Elec per LSR	Svc Order Submitted Manually per LSR	Incremental Charge - Manual Svc Order vs. Electronic-1st	Incremental Charge - Manual Svc Order vs. Electronic-Add'l	Incremental Charge - Manual Svc Order vs. Electronic-Disc 1st	Incremental Charge - Manual Svc Order vs. Electronic-Disc Add'l
						Rec	Nonrecurring		Nonrecurring Disconnect		OSS Rates ($)					
							First	Add'l	First	Add'l	SOMEC	SOMAN	SOMAN	SOMAN	SOMAN	SOMAN
	Interoffice Transport - Dedicated - 2 Wire Voice Grade - Facility Termination			UEPBX	U1TV2	22.60	39.36	26.62								
	Interoffice Transport - Dedicated - 2 Wire Voice Grade - Per Mile or Fraction Mile			UEPBX	U1TVM	0.013	0.00	0.00								
2-WIRE VOICE GRADE LOOP WITH 2-WIRE LINE PORT (RES - PBX)																
UNE Port/Loop Combination Rates																
	2-Wire VG Loop/Port Combo - Zone 1					14.13										
	2-Wire VG Loop/Port Combo - Zone 2					24.75										
	2-Wire VG Loop/Port Combo - Zone 3					50.62										
UNE Loop Rates																
	2-Wire Voice Grade Loop (SL 1) - Zone 1		1	UEPRG	UEPLX	11.77										
	2-Wire Voice Grade Loop (SL 1) - Zone 2		2	UEPRG	UEPLX	22.39										
	2-Wire Voice Grade Loop (SL 1) - Zone 3		3	UEPRG	UEPLX	48.26										
2-Wire Voice Grade Line Port Rates (RES - PBX)																
	2-Wire VG Unbundled Combination 2-Way PBX Trunk Port - Res			UEPRG	UEPRD	2.36	66.91	31.29								
FEATURES																
	All Features Offered			UEPRG	UEPVF	0.00	0.00	0.00								
NONRECURRING CHARGES (NRCs) - CURRENTLY COMBINED																
	2-Wire Voice Grade Loop/ Line Port Combination (PBX) - Conversion - Switch-As-Is			UEPRG	USAC2		7.68	1.85								
	2-Wire Voice Grade Loop/ Line Port Combination (PBX) - Conversion - Switch with Change			UEPRG	USACC		7.68	1.85								
ADDITIONAL NRCs																
	2-Wire Voice Grade Loop/ Line Port Combination (PBX) - Subsequent Activity			UEPRG	USAS2	0.00	0.00	0.00								
	PBX Subsequent Activity - Change/Rearrange Multiline Hunt Group						7.11	7.11								
	Unbundled Miscellaneous Rate Element, Tag Loop at End User Premise			UEPRG	URETL		8.33	0.83								
OFF/ON PREMISES EXTENSION CHANNELS																
	Local Channel Voice grade, per termination		1	UEPRG	P2JHX	14.93	102.10	65.72								
	Local Channel Voice grade, per termination		2	UEPRG	P2JHX	25.35	102.10	65.72								
	Local Channel Voice grade, per termination		3	UEPRG	P2JHX	50.46	102.10	65.72								
INTEROFFICE TRANSPORT																
	Interoffice Transport - Dedicated - 2 Wire Voice Grade - Facility Termination			UEPRG	U1TV2	22.60	39.36	26.62								
	Interoffice Transport - Dedicated - 2 Wire Voice Grade - Per Mile or Fraction Mile			UEPRG	U1TVM	0.013	0.00	0.00								
2-WIRE VOICE GRADE LOOP WITH 2-WIRE LINE PORT (BUS - PBX)																
UNE Port/Loop Combination Rates																
	2-Wire VG Loop/Port Combo - Zone 1					14.13										
	2-Wire VG Loop/Port Combo - Zone 2					24.75										
	2-Wire VG Loop/Port Combo - Zone 3					50.62										
UNE Loop Rates																
	2-Wire Voice Grade Loop (SL 1) - Zone 1		1	UEPPX	UEPLX	11.77										
	2-Wire Voice Grade Loop (SL 1) - Zone 2		2	UEPPX	UEPLX	22.39										
	2-Wire Voice Grade Loop (SL 1) - Zone 3		3	UEPPX	UEPLX	48.26										
2-Wire Voice Grade Line Port Rates (BUS - PBX)																
	Line Side Unbundled Combination 2-Way PBX Trunk Port - Bus			UEPPX	UEPPC	2.36	66.91	31.29								
	Line Side Unbundled Outward PBX Trunk Port - Bus			UEPPX	UEPPO	2.36	66.91	31.29								
	Line Side Unbundled Incoming PBX Trunk Port - Bus			UEPPX	UEPP1	2.36	66.91	31.29								
	2-Wire Voice Unbundled 2-Way Combination PBX Louisiana Calling Port			UEPPX	UEPL2	2.36	66.91	31.29								
	2-Wire Voice Unbundled PBX LD Terminal Ports			UEPPX	UEPLD	2.36	66.91	31.29								
	2-Wire Voice Unbundled 2-Way Combination PBX Usage Port			UEPPX	UEPXA	2.36	66.91	31.29								
	2-Wire Voice Unbundled PBX Toll Terminal Hotel Ports			UEPPX	UEPXB	2.36	66.91	31.29								
	2-Wire Voice Unbundled PBX LD DDD Terminals Port			UEPPX	UEPXC	2.36	66.91	31.29								
	2-Wire Voice Unbundled PBX LD Terminal Switchboard Port			UEPPX	UEPXD	2.36	66.91	31.29								
	2-Wire Voice Unbundled PBX LD Terminal Switchboard IDD Capable Port			UEPPX	UEPXE	2.36	66.91	31.29								
	2-Wire Voice Unbundled 2-Way PBX Louisiana Local Optional Calling Port			UEPPX	UEPXK	2.36	66.91	31.29								

UNBUNDLED NETWORK ELEMENTS - Louisiana

Attachment: 2 Ex. A

CATEGORY	RATE ELEMENTS	Interim	Zone	BCS	USOC	RATES ($)					Svc Order Submitted Elec per LSR	Svc Order Submitted Manually per LSR	Incremental Charge - Manual Svc Order vs. Electronic-1st	Incremental Charge - Manual Svc Order vs. Electronic-Add'l	Incremental Charge - Manual Svc Order vs. Electronic-Disc 1st	Incremental Charge - Manual Svc Order vs. Electronic-Disc Add'l
						Rec	Nonrecurring		Nonrecurring Disconnect		OSS Rates ($)					
							First	Add'l	First	Add'l	SOMEC	SOMAN	SOMAN	SOMAN	SOMAN	SOMAN
	2-Wire Voice Unbundled 2-Way PBX Hotel/Hospital Economy Administrative Calling Port			UEPPX	UEPXL	2.36	66.91	31.29								
	2-Wire Voice Unbundled 2-Way PBX Hotel/Hospital Economy Room Calling Port			UEPPX	UEPXM	2.36	66.91	31.29								
	2-Wire Voice Unbundled 1-Way Outgoing PBX Hotel/Hospital Discount Room Calling Port			UEPPX	UEPXO	2.36	66.91	31.29								
	2-Wire Voice Unbundled 1-Way Outgoing PBX Louisiana Local Discount Calling Port			UEPPX	UEPXP	2.36	66.91	31.29								
	2-Wire Voice Unbundled 1-Way Outgoing PBX Measured Port			UEPPX	UEPXS	2.36	66.91	31.29								
FEATURES																
	All Features Offered			UEPPX	UEPVF	0.00	0.00	0.00								
NONRECURRING CHARGES (NRCs) - CURRENTLY COMBINED																
	2-Wire Voice Grade Loop/ Line Port Combination (PBX) - Conversion - Switch-As-Is			UEPPX	USAC2		7.68	1.85								
	2-Wire Voice Grade Loop/ Line Port Combination (PBX) - Conversion - Switch with Change			UEPPX	USACC		7.68	1.85								
ADDITIONAL NRCs																
	2-Wire Voice Grade Loop/ Line Port Combination (PBX) - Subsequent Activity			UEPPX	USAS2	0.00	0.00	0.00								
	PBX Subsequent Activity - Change/Rearrange Multiline Hunt Group						7.11	7.11								
	Unbundled Miscellaneous Rate Element, Tag Loop at End User Premise			UEPPX	URETL		8.33	0.83								
OFF/ON PREMISES EXTENSION CHANNELS																
	Local Channel Voice grade, per termination		1	UEPPX	P2JHX	14.93	102.10	65.72								
	Local Channel Voice grade, per termination		2	UEPPX	P2JHX	25.35	102.10	65.72								
	Local Channel Voice grade, per termination		3	UEPPX	P2JHX	50.46	102.10	65.72								
INTEROFFICE TRANSPORT																
	Interoffice Transport - Dedicated - 2 Wire Voice Grade - Facility Termination			UEPPX	U1TV2	22.60	39.36	26.62								
	Interoffice Transport - Dedicated - 2 Wire Voice Grade - Per Mile or Fraction Mile			UEPPX	U1TVM	0.013	0.00	0.00								
2-WIRE VOICE GRADE LOOP WITH 2-WIRE ANALOG LINE COIN PORT																
UNE Port/Loop Combination Rates																
	2-Wire VG Coin Port/Loop Combo – Zone 1					14.13										
	2-Wire VG Coin Port/Loop Combo – Zone 2					24.75										
	2-Wire VG Coin Port/Loop Combo – Zone 3					50.62										
UNE Loop Rates																
	2-Wire Voice Grade Loop (SL1) - Zone 1		1	UEPCO	UEPLX	11.77										
	2-Wire Voice Grade Loop (SL1) - Zone 2		2	UEPCO	UEPLX	22.39										
	2-Wire Voice Grade Loop (SL1) - Zone 3		3	UEPCO	UEPLX	48.26										
2-Wire Voice Grade Line Ports (COIN)																
	2-Wire Coin 2-Way without Operator Screening and without Blocking (AL, KY, LA, MS)			UEPCO	UEPRF	2.36	38.85	19.08								
	2-Wire Coin 2-Way with Operator Screening and Blocking: 011, 900/976, 1+DDD (AL, KY, LA, MS)			UEPCO	UEPRA	2.36	38.85	19.08								
	2-Wire Coin 2-Way with Operator Screening and 011 Blocking (AL, LA, MS)			UEPCO	UEPRB	2.36	38.85	19.08								
	2-Wire Coin 2-Way with Operator Screening & Blocking: 900/976, 1+DDD, 011+, & Local (AL, KY, LA, MS)			UEPCO	UEPCD	2.36	38.85	19.08								
	2-Wire Coin Outward without Blocking and without Operator Screening (KY, LA, MS)			UEPCO	UEPRN	2.36	38.85	19.08								
	2-Wire Coin Outward with Operator Screening and 011 Blocking (LA)			UEPCO	UEPLA	2.36	38.85	19.08								
	2-Wire Coin Outward with Operator Screening and Blocking: 011, 900/976, 1+DDD (AL, KY, LA, MS)			UEPCO	UEPRH	2.36	38.85	19.08								
	2-Wire Coin Outward Operator Screening & Blocking: 900/976, 1+DDD, 011+, and Local (AL, KY, LA, MS)			UEPCO	UEPCN	2.36	38.85	19.08								
	2-Wire Coin 2-Way Smartline with 900/976 (Louisiana only)			UEPCO	UEPNA	2.36	38.85	19.08								
	2-Wire Coin Outward Smartline with 900/976 (Louisiana only)			UEPCO	UEPCB	2.36	38.85	19.08								
ADDITIONAL UNE COIN PORT/LOOP (RC)																
	UNE Coin Port/Loop Combo Usage (Flat Rate)			UEPCO	URECU	1.81	0.00	0.00	0.00	0.00						
NONRECURRING CHARGES - CURRENTLY COMBINED																

UNBUNDLED NETWORK ELEMENTS - Louisiana

Attachment: 2 Ex. A

CATEGORY	RATE ELEMENTS	Interim	Zone	BCS	USOC	RATES ($) Rec	Nonrecurring First	Nonrecurring Add'l	Nonrecurring Disconnect First	Nonrecurring Disconnect Add'l	Svc Order Submitted Elec per LSR	Svc Order Submitted Manually per LSR	Incremental Charge - Manual Svc Order vs. Electronic-1st	Incremental Charge - Manual Svc Order vs. Electronic-Add'l	Incremental Charge - Manual Svc Order vs. Electronic-Disc 1st	Incremental Charge - Manual Svc Order vs. Electronic-Disc Add'l
											OSS Rates ($)					
							First	Add'l	First	Add'l	SOMEC	SOMAN	SOMAN	SOMAN	SOMAN	SOMAN
	2-Wire Voice Grade Loop / Line Port Combination - Conversion - Switch-as-is			UEPCO	USAC2		0.10	0.10								
	2-Wire Voice Grade Loop / Line Port Combination - Conversion - Switch with change			UEPCO	USACC		0.10	0.10								
ADDITIONAL NRCs																
	2-Wire Voice Grade Loop/Line Port Combination - Subsequent Activity			UEPCO	USAS2		0.00	0.00								
	Unbundled Miscellaneous Rate Element, Tag Loop at End User Premise			UEPCO	URETL		8.33	0.83								
2-WIRE VOICE LOOP/ 2WIRE VOICE GRADE IO TRANSPORT/ 2-WIRE LINE PORT (RES)																
UNE Port/Loop Combination Rates																
	2-Wire VG Loop/IO Tranport/Port Combo - Zone 1					17.45										
	2-Wire VG Loop/IO Tranport/Port Combo - Zone 2					27.87										
	2-Wire VG Loop/IO Tranport/Port Combo - Zone 3					52.98										
UNE Loop Rates																
	2-Wire Voice Grade Loop (SL2) - Zone 1		1	UEPFR	UECF2	14.93										
	2-Wire Voice Grade Loop (SL2) - Zone 2		2	UEPFR	UECF2	25.35										
	2-Wire Voice Grade Loop (SL2) - Zone 3		3	UEPFR	UECF2	50.46										
2-Wire Voice Grade Line Port Rates (Res)																
	2-Wire voice unbundled port - residence			UEPFR	UEPRL	2.52	104.41	67.93								
	2-Wire voice unbundled port with Caller ID - res			UEPFR	UEPRC	2.52	104.41	67.93								
	2-Wire voice unbundled port outgoing only - res			UEPFR	UEPRO	2.52	104.41	67.93								
	2-Wire voice Grade unbundled Louisiana extended local dialing parity port with Caller ID - res			UEPFR	UEPAS	2.52	104.41	67.93								
	2-Wire voice unbundled Louisiana Area Plus with Caller ID - res (RUL)			UEPFR	UEPAG	2.52	104.41	67.93								
	2-Wire voice unbundles res, low usage line port with Caller ID (LUM)			UEPFR	UEPAP	2.52	104.41	67.93								
	2-Wire Voice Unbundled Louisiana Residence Dialing Plan without Caller ID			UEPFR	UEPWG	2.52	104.41	67.93								
INTEROFFICE TRANSPORT																
	Interoffice Transport - Dedicated - 2 Wire Voice Grade - Facility Termination			UEPFR	U1TV2	22.60	39.36	26.62								
	Interoffice Transport - Dedicated - 2 Wire Voice Grade - Per Mile or Fraction Mile			UEPFR	1L5XX	0.013										
FEATURES																
	All Features Offered			UEPFR	UEPVF	0.00	0.00	0.00								
NONRECURRING CHARGES (NRCs) - CURRENTLY COMBINED																
	2-Wire Loop / Dedicated IO Transport / 2 Wire Line Port Combination - Conversion - Switch-as-is			UEPFR	USAC2		8.24	1.81								
	2-Wire Loop / Dedicated IO Transport / 2 Wire Line Port Combination - Conversion - Switch-With-Change			UEPFR	USACC		8.24	1.81								
	Unbundled Miscellaneous Rate Element, Tag Designed Loop at End User Premise			UEPFR	URETN		11.20	1.10								
2-WIRE VOICE LOOP/ 2WIRE VOICE GRADE IO TRANSPORT/ 2-WIRE LINE PORT (BUS)																
UNE Port/Loop Combination Rates																
	2-Wire VG Loop/IO Tranport/Port Combo - Zone 1					17.45										
	2-Wire VG Loop/IO Tranport/Port Combo - Zone 2					27.87										
	2-Wire VG Loop/IO Tranport/Port Combo - Zone 3					52.98										
UNE Loop Rates																
	2-Wire Voice Grade Loop (SL2) - Zone 1		1	UEPFB	UECF2	14.93										
	2-Wire Voice Grade Loop (SL2) - Zone 2		2	UEPFB	UECF2	25.35										
	2-Wire Voice Grade Loop (SL2) - Zone 3		3	UEPFB	UECF2	50.46										
2-Wire Voice Grade Line Port (Bus)																
	2-Wire voice unbundled port without Caller ID - bus			UEPFB	UEPBL	2.52	104.41	67.93								
	2-Wire voice unbundled port with Caller + E484 ID - bus			UEPFB	UEPBC	2.52	104.41	67.93								
	2-Wire voice unbundled port outgoing only - bus			UEPFB	UEPBO	2.52	104.41	67.93								
	2-Wire voice Grade unbundled Alabama extended local dialing parity port with Caller ID - bus			UEPFB	UEPAW	2.52										
	2-Wire voice Grade unbundled Louisiana extended local dialing parity port with Caller ID - bus			UEPFB	UEPAX	2.52	104.41	67.93								
	2-Wire voice unbundled incoming only port with Caller ID - Bus			UEPFB	UEPB1	2.52	104.41	67.93								
	2-Wire voice unbundled Louisiana Bus Area Calling Port with Caller ID (BUC)			UEPFB	UEPAA	2.52	104.41	67.93								

CATEGORY	RATE ELEMENTS	Interim	Zone	BCS	USOC	RATES ($)					Svc Order Submitted Elec per LSR	Svc Order Submitted Manually per LSR	Incremental Charge - Manual Svc Order vs. Electronic-1st	Incremental Charge - Manual Svc Order vs. Electronic-Add'l	Incremental Charge - Manual Svc Order vs. Electronic-Disc 1st	Incremental Charge - Manual Svc Order vs. Electronic-Disc Add'l
						Rec	Nonrecurring		Nonrecurring Disconnect		OSS Rates ($)					
							First	Add'l	First	Add'l	SOMEC	SOMAN	SOMAN	SOMAN	SOMAN	SOMAN
	2-Wire Voice Unbundled Louisiana Business Dialing Plan without Caller ID			UEPFB	UEPWH	2.52	104.41	67.93								
	INTEROFFICE TRANSPORT															
	Interoffice Transport - Dedicated - 2 Wire Voice Grade - Facility Termination			UEPFB	U1TV2	22.60	39.36	26.62								
	Interoffice Transport - Dedicated - 2 Wire Voice Grade - Per Mile or Fraction Mile			UEPFB	1L5XX	0.013										
	FEATURES															
	All Features Offered			UEPFB	UEPVF	0.00	0.00	0.00								
	NONRECURRING CHARGES (NRCs) - CURRENTLY COMBINED															
	2-Wire Loop / Dedicated IO Transport / 2 Wire Line Port Combination - Conversion - Switch-as-is			UEPFB	USAC2		8.24	1.81								
	2-Wire Loop / Dedicated IO Transport / 2 Wire Line Port Combination - Conversion - Switch with change			UEPFB	USACC		8.24	1.81								
	Unbundled Miscellaneous Rate Element, Tag Designed Loop at End User Premise			UEPFB	URETN		11.20	1.10								
	2-WIRE VOICE LOOP/ 2WIRE VOICE GRADE IO TRANSPORT/ 2-WIRE LINE PORT (PBX)															
	UNE Port/Loop Combination Rates															
	2-Wire VG Loop/IO Tranport/Port Combo - Zone 1					17.45										
	2-Wire VG Loop/IO Tranport/Port Combo - Zone 2					27.87										
	2-Wire VG Loop/IO Tranport/Port Combo - Zone 3					52.98										
	UNE Loop Rates															
	2-Wire Voice Grade Loop (SL2) - Zone 1		1	UEPFP	UECF2	14.93										
	2-Wire Voice Grade Loop (SL2) - Zone 2		2	UEPFP	UECF2	25.35										
	2-Wire Voice Grade Loop (SL2) - Zone 3		3	UEPFP	UECF2	50.46										
	2-Wire Voice Grade Line Port Rates (BUS - PBX)															
	Line Side Unbundled Combination 2-Way PBX Trunk Port - Bus			UEPFP	UEPPC	2.52	132.47	82.14								
	Line Side Unbundled Outward PBX Trunk Port - Bus			UEPFP	UEPPO	2.52	132.47	82.14								
	Line Side Unbundled Incoming PBX Trunk Port - Bus			UEPFP	UEPP1	2.52	132.47	82.14								
	2-Wire Voice Unbundled 2-Way Combination PBX Louisiana Calling Port			UEPFP	UEPL2	2.52	132.47	82.14								
	2-Wire Voice Unbundled PBX LD Terminal Ports			UEPFP	UEPLD	2.52	132.47	82.14								
	2-Wire Voice Unbundled 2-Way Combination PBX Usage Port			UEPFP	UEPXA	2.52	132.47	82.14								
	2-Wire Voice Unbundled PBX Toll Terminal Hotel Ports			UEPFP	UEPXB	2.52	132.47	82.14								
	2-Wire Voice Unbundled PBX LD DDD Terminals Port			UEPFP	UEPXC	2.52	132.47	82.14								
	2-Wire Voice Unbundled PBX LD Terminal Switchboard Port			UEPFP	UEPXD	2.52	132.47	82.14								
	2-Wire Voice Unbundled PBX LD Terminal Switchboard IDD Capable Port			UEPFP	UEPXE	2.52	132.47	82.14								
	2-Wire Voice Unbundled 2-Way PBX Louisiana Local Optional Calling Port			UEPFP	UEPXK	2.52	132.47	82.14								
	2-Wire Voice Unbundled 2-Way PBX Hotel/Hospital Economy Administrative Calling Port			UEPFP	UEPXL	2.52	132.47	82.14								
	2-Wire Voice Unbundled 2-Way PBX Hotel/Hospital Economy Room Calling Port			UEPFP	UEPXM	2.52	132.47	82.14								
	2-Wire Voice Unbundled 1-Way Outgoing PBX Hotel/Hospital Discount Room Calling Port			UEPFP	UEPXO	2.52	132.47	82.14								
	2-Wire Voice Unbundled 1-Way Outgoing PBX Louisiana Local Discount Calling Port			UEPFP	UEPXP	2.52	132.47	82.14								
	2-Wire Voice Unbundled 1-Way Outgoing PBX Measured Port			UEPFP	UEPXS	2.52	132.47	82.14								
	INTEROFFICE TRANSPORT															
	Interoffice Transport - Dedicated - 2 Wire Voice Grade - Facility Termination			UEPFP	U1TV2	22.60	39.36	26.62								
	Interoffice Transport - Dedicated - 2 Wire Voice Grade - Per Mile or Fraction Mile			UEPFP	1L5XX	0.013										
	FEATURES															
	All Features Offered			UEPFP	UEPVF	0.00	0.00	0.00								
	NONRECURRING CHARGES (NRCs) - CURRENTLY COMBINED															
	2-Wire Loop / Dedicated IO Transport / 2 Wire Line Port Combination - Conversion - Switch-as-is			UEPFP	USAC2		8.24	1.81								
	2-Wire Loop / Dedicated IO Transport / 2 Wire Line Port Combination - Conversion - Switch with change			UEPFP	USACC		8.24	1.81								
	Unbundled Miscellaneous Rate Element, Tag Designed Loop at End User Premise			UEPFP	URETN		11.20	1.10								

UNBUNDLED NETWORK ELEMENTS - Louisiana

Attachment: 2 Ex. A

CATEGORY	RATE ELEMENTS	Interim	Zone	BCS	USOC	RATES ($) Rec	Nonrecurring First	Nonrecurring Add'l	Nonrecurring Disconnect First	Nonrecurring Disconnect Add'l	Svc Order Submitted Elec per LSR	Svc Order Submitted Manually per LSR	Incremental Charge - Manual Svc Order vs. Electronic-1st	Incremental Charge - Manual Svc Order vs. Electronic-Add'l	Incremental Charge - Manual Svc Order vs. Electronic-Disc 1st	Incremental Charge - Manual Svc Order vs. Electronic-Disc Add'l
											OSS Rates ($)					
							First	Add'l	First	Add'l	SOMEC	SOMAN	SOMAN	SOMAN	SOMAN	SOMAN
	2-WIRE VOICE GRADE LOOP- BUS ONLY - WITH 2-WIRE DID TRUNK PORT															
	UNE Port/Loop Combination Rates															
	2-Wire VG Loop/2-Wire DID Trunk Port Combo - UNE Zone 1					24.20										
	2-Wire VG Loop/2-Wire DID Trunk Port Combo - UNE Zone 2					34.62										
	2-Wire VG Loop/2-Wire DID Trunk Port Combo - UNE Zone 3					59.73										
	UNE Loop Rates															
	2-Wire Analog Voice Grade Loop - (SL2) - UNE Zone 1		1	UEPPX	UECD1	14.93										
	2-Wire Analog Voice Grade Loop - (SL2) - UNE Zone 2		2	UEPPX	UECD1	25.35										
	2-Wire Analog Voice Grade Loop - (SL2) - UNE Zone 3		3	UEPPX	UECD1	50.46										
	UNE Port Rate															
	Exchange Ports - 2-Wire DID Port			UEPPX	UEPD1	9.27	217.95	83.92								
	NONRECURRING CHARGES - CURRENTLY COMBINED															
	2-Wire Voice Grade Loop / 2-Wire DID Trunk Port Combination - Switch-as-is			UEPPX	USAC1		7.10	1.81								
	2-Wire Voice Grade Loop / 2-Wire DID Trunk Port Conversion with BellSouth Allowable Changes			UEPPX	USA1C		7.10	1.81								
	ADDITIONAL NRCs															
	2-Wire DID Subsequent Activity - Add Trunks, Per Trunk			UEPPX	USAS1		26.01	26.01								
	Unbundled Miscellaneous Rate Element, Tag Designed Loop at End User Premise			UEPPX	URETN		11.20	1.10								
	Telephone Number/Trunk Group Establisment Charges															
	DID Trunk Termination (One Per Port)			UEPPX	NDT	0.00	0.00	0.00								
	Additional DID Numbers for each Group of 20 DID Numbers			UEPPX	ND4	0.00	0.00	0.00								
	DID Numbers, Non- consecutive DID Numbers , Per Number			UEPPX	ND5	0.00	0.00	0.00								
	Reserve Non-Consecutive DID numbers			UEPPX	ND6	0.00	0.00	0.00								
	Reserve DID Numbers			UEPPX	NDV	0.00	0.00	0.00								
	2-WIRE ISDN DIGITAL GRADE LOOP WITH 2-WIRE ISDN DIGITAL LINE SIDE PORT															
	UNE Port/Loop Combination Rates															
	2W ISDN Digital Grade Loop/2W ISDN Digital Line Side Port - UNE Zone 1					28.48										
	2W ISDN Digital Grade Loop/2W ISDN Digital Line Side Port - UNE Zone 2					41.34										
	2W ISDN Digital Grade Loop/2W ISDN Digital Line Side Port - UNE Zone 3					71.99										
	UNE Loop Rates															
	2-Wire ISDN Digital Grade Loop - UNE Zone 1		1	UEPPB UEPPR	USL2X	19.09										
	2-Wire ISDN Digital Grade Loop - UNE Zone 2		2	UEPPB UEPPR	USL2X	31.95										
	2-Wire ISDN Digital Grade Loop - UNE Zone 3		3	UEPPB UEPPR	USL2X	62.60										
	UNE Port Rate															
	Exchange Port - 2-Wire ISDN Line Side Port			UEPPR	UEPPR	9.39	184.10	128.42								
	Exchange Port - 2-Wire ISDN Line Side Port			UEPPB	UEPPB	9.39	184.10	128.42								
	NONRECURRING CHARGES - CURRENTLY COMBINED															
	2-Wire ISDN Digital Grade Loop / 2-Wire ISDN Line Side Port Combination - Conversion			UEPPB UEPPR	USACB	0.00	37.40	26.23								
	ADDITIONAL NRCs															
	Unbundled Miscellaneous Rate Element, Tag Designed Loop at End User Premise			UEPPB UEPPR	URETN		11.20	1.10								
	Unbundled Miscellaneous Rate Element, Tag Loop at End User Premise			UEPPB UEPPR	URETL		8.33	0.83								
	B-CHANNEL USER PROFILE ACCESS:															
	CVS/CSD (DMS/5ESS)			UEPPB UEPPR	U1UCA	0.00	0.00	0.00								
	CVS (EWSD)			UEPPB UEPPR	U1UCB	0.00	0.00	0.00								
	CSD			UEPPB UEPPR	U1UCC	0.00	0.00	0.00								
	B-CHANNEL AREA PLUS USER PROFILE ACCESS: (AL,KY,LA,MS SC,MS, & TN)															
	CVS/CSD (DMS/5ESS)			UEPPB UEPPR	U1UCD	0.00	0.00	0.00								
	CVS (EWSD)			UEPPB UEPPR	U1UCE	0.00	0.00	0.00								
	CSD			UEPPB UEPPR	U1UCF	0.00	0.00	0.00								
	USER TERMINAL PROFILE															
	User Terminal Profile (EWSD only)			UEPPB UEPPR	U1UMA	0.00	0.00	0.00								
	VERTICAL FEATURES															
	All Vertical Features - One per Channel B User Profile			UEPPB UEPPR	UEPVF	0.00	0.00	0.00								
	INTEROFFICE CHANNEL MILEAGE															

UNBUNDLED NETWORK ELEMENTS - Louisiana

Attachment: 2 Ex. A

CATEGORY	RATE ELEMENTS	Interim	Zone	BCS	USOC	RATES ($) Rec	Nonrecurring First	Nonrecurring Add'l	Nonrecurring Disconnect First	Nonrecurring Disconnect Add'l	Svc Order Submitted Elec per LSR	Svc Order Submitted Manually per LSR	Incremental Charge - Manual Svc Order vs. Electronic-1st	Incremental Charge - Manual Svc Order vs. Electronic-Add'l	Incremental Charge - Manual Svc Order vs. Electronic-Disc 1st	Incremental Charge - Manual Svc Order vs. Electronic-Disc Add'l
											OSS Rates ($)					
							First	Add'l	First	Add'l	SOMEC	SOMAN	SOMAN	SOMAN	SOMAN	SOMAN
	Interoffice Channel mileage each, including first mile and facilities termination			UEPPB UEPPR	M1GNC	22.613	39.36	26.62								
	Interoffice Channel mileage each, additional mile			UEPPB UEPPR	M1GNM	0.013	0.00	0.00								
UNBUNDLED CENTREX PORT/LOOP COMBINATIONS - COST BASED RATES																
UNE-P CENTREX - 1AESS - (Valid in AL,FL,GA,KY,LA,MS,&TN only)																
2-Wire VG Loop/2-Wire Voice Grade Port (Centrex) Combo																
UNE Port/Loop Combination Rates (Non-Design)																
	2-Wire VG Loop/2-Wire Voice Grade Port (Centrex) Port Combo - Non-Design					14.13										
	2-Wire VG Loop/2-Wire Voice Grade Port (Centrex)Port Combo - Non-Design					24.75										
	2-Wire VG Loop/2-Wire Voice Grade Port (Centrex)Port Combo - Non-Design					50.62										
UNE Port/Loop Combination Rates (Design)																
	2-Wire VG Loop/2-Wire Voice Grade Port (Centrex) Port Combo - Design					17.29										
	2-Wire VG Loop/2-Wire Voice Grade Port (Centrex)Port Combo - Design					27.71										
	2-Wire VG Loop/2-Wire Voice Grade Port (Centrex)Port Combo - Design					49.26										
UNE Loop Rate																
	2-Wire Voice Grade Loop (SL 1) - Zone 1		1	UEP91	UECS1	11.77										
	2-Wire Voice Grade Loop (SL 1) - Zone 2		2	UEP91	UECS1	22.39										
	2-Wire Voice Grade Loop (SL 1) - Zone 3		3	UEP91	UECS1	48.26										
	2-Wire Voice Grade Loop (SL 2) - Zone 1		1	UEP91	UECS2	14.93										
	2-Wire Voice Grade Loop (SL 2) - Zone 2		2	UEP91	UECS2	25.35										
	2-Wire Voice Grade Loop (SL 2) - Zone 3		3	UEP91	UECS2	50.46										
UNE Ports																
All States (Except North Carolina and Sout Carolina)																
	2-Wire Voice Grade Port (Centrex) Basic Local Area			UEP91	UEPYA	2.36	38.85	19.08								
	2-Wire Voice Grade Port (Centrex 800 termination)Basic Local Area			UEP91	UEPYB	2.36	38.85	19.08								
	2-Wire Voice Grade Port (Centrex with Caller ID)Note1 Basic Local Area			UEP91	UEPYH	2.36	38.85	19.08								
	2-Wire Voice Grade Port (Centrex from diff Serving Wire Center) Note 2, 3 Basic Local Area			UEP91	UEPYM	2.36	104.41	67.93								
	2-Wire Voice Grade Port, Diff Serving Wire Center - 800 Service Term - Basic Local Area			UEP91	UEPYZ	2.36	104.41	67.93								
	2-Wire Voice Grade Port terminated in on Megalink or equivalent - Basic Local Area			UEP91	UEPY9	2.36	38.85	19.08								
	2-Wire Voice Grade Port Terminated on 800 Service Term - Basic Local Area			UEP91	UEPY2	2.36	38.85	19.08								
AL, KY, LA, MS, & TN Only																
	2-Wire Voice Grade Port (Centrex)			UEP91	UEPQA	2.36	38.85	19.08								
	2-Wire Voice Grade Port (Centrex 800 termination)			UEP91	UEPQB	2.36	38.85	19.08								
	2-Wire Voice Grade Port (Centrex with Caller ID)1			UEP91	UEPQH	2.36	38.85	19.08								
	2-Wire Voice Grade Port (Centrex from diff Serving Wire Center)2,3			UEP91	UEPQM	2.36	104.41	67.93								
	2-Wire Voice Grade Port, Diff Serving Wire Center - 2,3 - 800 Service Term			UEP91	UEPQZ	2.36	104.41	67.93								
	2-Wire Voice Grade Port terminated in on Megalink or equivalent			UEP91	UEPQ9	2.36	38.85	19.08								
	2-Wire Voice Grade Port Terminated on 800 Service Term			UEP91	UEPQ2	2.36	38.85	19.08								
Local Switching																
	Centrex Intercom Funtionality, per port			UEP91	URECS	0.8577										
Features																
	All Standard Features Offered, per port			UEP91	UEPVF	0.00										
	All Select Features Offered, per port			UEP91	UEPVS	0.00	412.25									
	All Centrex Control Features Offered, per port			UEP91	UEPVC	0.00										
NARS																
	Unbundled Network Access Register - Combination			UEP91	UARCX	0.00	0.00	0.00	0.00	0.00						
	Unbundled Network Access Register - Indial			UEP91	UAR1X	0.00	0.00	0.00	0.00	0.00						
	Unbundled Network Access Register - Outdial			UEP91	UAROX	0.00	0.00	0.00	0.00	0.00						
Miscellaneous Terminations																

UNBUNDLED NETWORK ELEMENTS - Louisiana

Attachment: 2 Ex. A

CATEGORY	RATE ELEMENTS	Interim	Zone	BCS	USOC	RATES ($) Rec	Nonrecurring First	Nonrecurring Add'l	Nonrecurring Disconnect First	Nonrecurring Disconnect Add'l	Svc Order Submitted Elec per LSR	Svc Order Submitted Manually per LSR	Incremental Charge - Manual Svc Order vs. Electronic-1st	Incremental Charge - Manual Svc Order vs. Electronic-Add'l	Incremental Charge - Manual Svc Order vs. Electronic-Disc 1st	Incremental Charge - Manual Svc Order vs. Electronic-Disc Add'l
											OSS Rates ($)					
							First	Add'l	First	Add'l	SOMEC	SOMAN	SOMAN	SOMAN	SOMAN	SOMAN
2-Wire Trunk Side																
	Trunk Side Terminations, each			UEP91	CENA6	8.29	115.85	18.20								
Interoffice Channel Mileage - 2-Wire																
	Interoffice Channel Facilities Termination - Voice Grade			UEP91	M1GBC	22.60	39.36	26.62								
	Interoffice Channel mileage, per mile or fraction of mile			UEP91	M1GBM	0.013										
Feature Activations (DS0) Centrex Loops on Channelized DS1 Service																
D4 Channel Bank Feature Activations																
	Feature Activation on D-4 Channel Bank Centrex Loop Slot			UEP91	1PQWS	0.6497										
	Feature Activation on D-4 Channel Bank FX line Side Loop Slot			UEP91	1PQW6	0.6497										
	Feature Activation on D-4 Channel Bank FX Trunk Side Loop Slot			UEP91	1PQW7	0.6497										
	Feature Activation on D-4 Channel Bank Centrex Loop Slot - Different Wire Center			UEP91	1PQWP	0.6497										
	Feature Activation on D-4 Channel Bank Private Line Loop Slot			UEP91	1PQWV	0.6497										
	Feature Activation on D-4 Channel Bank Tjie Line/Trunk Loop Slot			UEP91	1PQWQ	0.6497										
	Feature Activation on D-4 Channel Bank WATS Loop Slot			UEP91	1PQWA	0.6497										
Non-Recurring Charges (NRC) Associated with UNE-P Centrex																
	Conversion - Currently Combined Switch-As-Is with allowed changes, per port			UEP91	USAC2		0.10	0.10								
	Conversion of Existing Centrex Common Block			UEP91	USACN	0.00	36.66	16.10								
	New Centrex Standard Common Block			UEP91	M1ACS	0.00	680.40									
	New Centrex Customized Common Block			UEP91	M1ACC	0.00	680.40									
	Secondary Block, per Block			UEP91	M2CC1	0.00	79.31									
	NAR Establishment Charge, Per Occasion			UEP91	URECA	0.00	73.93									
Additional Non-Recurring Charges (NRC)																
	Unbundled Miscellaneous Rate Element, Tag Loop at End Use Premise			UEP91	URETL		8.33	0.83								
	Unbundled Miscellaneous Rate Element, Tag Design Loop at End Use Premise			UEP91	URETN		11.20	1.10								
UNE-P CENTREX - 5ESS (Valid in All States)																
2-Wire VG Loop/2-Wire Voice Grade Port (Centrex) Combo																
UNE Port/Loop Combination Rates (Non-Design)																
	2-Wire VG Loop/2-Wire Voice Grade Port (Centrex) Port Combo - Non-Design					14.13										
	2-Wire VG Loop/2-Wire Voice Grade Port (Centrex)Port Combo - Non-Design					24.75										
	2-Wire VG Loop/2-Wire Voice Grade Port (Centrex)Port Combo - Non-Design					50.62										
UNE Port/Loop Combination Rates (Design)																
	2-Wire VG Loop/2-Wire Voice Grade Port (Centrex) Port Combo - Design					17.29										
	2-Wire VG Loop/2-Wire Voice Grade Port (Centrex)Port Combo - Design					27.71										
	2-Wire VG Loop/2-Wire Voice Grade Port (Centrex)Port Combo - Design					49.26										
UNE Loop Rate																
	2-Wire Voice Grade Loop (SL 1) - Zone 1		1	UEP95	UECS1	11.77										
	2-Wire Voice Grade Loop (SL 1) - Zone 2		2	UEP95	UECS1	22.39										
	2-Wire Voice Grade Loop (SL 1) - Zone 3		3	UEP95	UECS1	48.26										
	2-Wire Voice Grade Loop (SL 2) - Zone 1		1	UEP95	UECS2	14.93										
	2-Wire Voice Grade Loop (SL 2) - Zone 2		2	UEP95	UECS2	25.35										
	2-Wire Voice Grade Loop (SL 2) - Zone 3		3	UEP95	UECS2	50.46										
UNE Port Rate																
All States																
	2-Wire Voice Grade Port (Centrex) Basic Local Area			UEP95	UEPYA	2.36	38.85	19.08								
	2-Wire Voice Grade Port (Centrex 800 termination)			UEP95	UEPYB	2.36	38.85	19.08								
	2-Wire Voice Grade Port (Centrex with Caller ID)1Basic Local Area			UEP95	UEPYH	2.36	38.85	19.08								
	2-Wire Voice Grade Port (Centrex from diff Serving Wire Center)2,3 Basic Local Area			UEP95	UEPYM	2.36	104.41	67.93								

CATEGORY	RATE ELEMENTS	Interim	Zone	BCS	USOC	RATES ($)					Svc Order Submitted Elec per LSR	Svc Order Submitted Manually per LSR	Incremental Charge - Manual Svc Order vs. Electronic-1st	Incremental Charge - Manual Svc Order vs. Electronic-Add'l	Incremental Charge - Manual Svc Order vs. Electronic-Disc 1st	Incremental Charge - Manual Svc Order vs. Electronic-Disc Add'l
						Rec	Nonrecurring		Nonrecurring Disconnect		OSS Rates ($)					
							First	Add'l	First	Add'l	SOMEC	SOMAN	SOMAN	SOMAN	SOMAN	SOMAN
	2-Wire Voice Grade Port, Diff Serving Wire Center 2,3 - 800 Service Term - Basic Local Area			UEP95	UEPYZ	2.36	104.41	67.93								
	2-Wire Voice Grade Port terminated in on Megalink or equivalent - Basic Local Area			UEP95	UEPY9	2.36	38.85	19.08								
	2-Wire Voice Grade Port Terminated on 800 Service Term - Basic Local Area			UEP95	UEPY2	2.36	38.85	19.08								
AL, KY, LA, MS, SC, & TN Only																
	2-Wire Voice Grade Port (Centrex)			UEP95	UEPQA	2.36	38.85	19.08								
	2-Wire Voice Grade Port (Centrex 800 termination)			UEP95	UEPQB	2.36	38.85	19.08								
	2-Wire Voice Grade Port (Centrex with Caller ID)1			UEP95	UEPQH	2.36	38.85	19.08								
	2-Wire Voice Grade Port (Centrex from diff Serving Wire Center)2,3			UEP95	UEPQM	2.36	104.41	67.93								
	2-Wire Voice Grade Port, Diff Serving Wire Center - 800 Service Term 2,3			UEP95	UEPQZ	2.36	104.41	67.93								
	2-Wire Voice Grade Port terminated in on Megalink or equivalent			UEP95	UEPQ9	2.36	38.85	19.08								
	2-Wire Voice Grade Port Terminated on 800 Service Term			UEP95	UEPQ2	2.36	38.85	19.08								
Local Switching																
	Centrex Intercom Funtionality, per port			UEP95	URECS	0.8577										
Features																
	All Standard Features Offered, per port			UEP95	UEPVF	0.00										
	All Select Features Offered, per port			UEP95	UEPVS	0.00	412.25									
	All Centrex Control Features Offered, per port			UEP95	UEPVC	0.00										
NARS																
	Unbundled Network Access Register - Combination			UEP95	UARCX	0.00	0.00	0.00	0.00	0.00						
	Unbundled Network Access Register - Indial			UEP95	UAR1X	0.00	0.00	0.00	0.00	0.00						
	Unbundled Network Access Register - Outdial			UEP95	UAROX	0.00	0.00	0.00	0.00	0.00						
Miscellaneous Terminations																
2-Wire Trunk Side																
	Trunk Side Terminations, each			UEP95	CEND6	8.29	115.85	18.20								
4-Wire Digital (1.544 Megabits)																
	DS1 Circuit Terminations, each			UEP95	M1HD1	68.47	196.18	92.92								
	DS0 Channels Activated, each			UEP95	M1HDO	0.00	14.06									
Interoffice Channel Mileage - 2-Wire																
	Interoffice Channel Facilities Termination			UEP95	M1GBC	22.60	39.36	26.62								
	Interoffice Channel mileage, per mile or fraction of mile			UEP95	M1GBM	0.013										
Feature Activations (DS0) Centrex Loops on Channelized DS1 Service																
D4 Channel Bank Feature Activations																
	Feature Activation on D-4 Channel Bank Centrex Loop Slot			UEP95	1PQWS	0.6497										
	Feature Activation on D-4 Channel Bank FX line Side Loop Slot			UEP95	1PQW6	0.6497										
	Feature Activation on D-4 Channel Bank FX Trunk Side Loop Slot			UEP95	1PQW7	0.6497										
	Feature Activation on D-4 Channel Bank Centrex Loop Slot - Different Wire Center			UEP95	1PQWP	0.6497										
	Feature Activation on D-4 Channel Bank Private Line Loop Slot			UEP95	1PQWV	0.6497										
	Feature Activation on D-4 Channel Bank Tjie Line/Trunk Loop Slot			UEP95	1PQWQ	0.6497										
	Feature Activation on D-4 Channel Bank WATS Loop Slot			UEP95	1PQWA	0.6497										
Non-Recurring Charges (NRC) Associated with UNE-P Centrex																
	NRC Conversion Currently Combined Switch-As-Is with allowed changes, per port			UEP95	USAC2		0.10	0.10								
	Conversion of Existing Centrex Common Block, each			UEP95	USACN		36.66	16.10								
	New Centrex Standard Common Block			UEP95	M1ACS	0.00	680.40									
	New Centrex Customized Common Block			UEP95	M1ACC	0.00	680.40									
	NAR Establishment Charge, Per Occasion			UEP95	URECA	0.00	73.93									
Additional Non-Recurring Charges (NRC)																
	Unbundled Miscellaneous Rate Element, Tag Loop at End Use Premise			UEP95	URETL		8.33	0.83								
	Unbundled Miscellaneous Rate Element, Tag Design Loop at End Use Premise			UEP95	URETN		11.20	1.10								
UNE-P CENTREX - DMS100 (Valid in All States)																
2-Wire VG Loop/2-Wire Voice Grade Port (Centrex) Combo																

UNBUNDLED NETWORK ELEMENTS - Louisiana

Attachment: 2 Ex. A

CATEGORY	RATE ELEMENTS	Interim	Zone	BCS	USOC	RATES ($) Rec	Nonrecurring First	Nonrecurring Add'l	Nonrecurring Disconnect First	Nonrecurring Disconnect Add'l	Svc Order Submitted Elec per LSR	Svc Order Submitted Manually per LSR	Incremental Charge - Manual Svc Order vs. Electronic-1st	Incremental Charge - Manual Svc Order vs. Electronic-Add'l	Incremental Charge - Manual Svc Order vs. Electronic-Disc 1st	Incremental Charge - Manual Svc Order vs. Electronic-Disc Add'l
											OSS Rates ($)					
							First	Add'l	First	Add'l	SOMEC	SOMAN	SOMAN	SOMAN	SOMAN	SOMAN
UNE Port/Loop Combination Rates (Non-Design)																
	2-Wire VG Loop/2-Wire Voice Grade Port (Centrex) Port Combo - Non-Design					14.13										
	2-Wire VG Loop/2-Wire Voice Grade Port (Centrex)Port Combo - Non-Design					24.75										
	2-Wire VG Loop/2-Wire Voice Grade Port (Centrex)Port Combo - Non-Design					50.62										
UNE Port/Loop Combination Rates (Design)																
	2-Wire VG Loop/2-Wire Voice Grade Port (Centrex) Port Combo - Design					17.29										
	2-Wire VG Loop/2-Wire Voice Grade Port (Centrex)Port Combo - Design					27.71										
	2-Wire VG Loop/2-Wire Voice Grade Port (Centrex)Port Combo - Design					49.26										
UNE Loop Rate																
	2-Wire Voice Grade Loop (SL 1) - Zone 1		1	UEP9D	UECS1	11.77										
	2-Wire Voice Grade Loop (SL 1) - Zone 2		2	UEP9D	UECS1	22.39										
	2-Wire Voice Grade Loop (SL 1) - Zone 3		3	UEP9D	UECS1	48.26										
	2-Wire Voice Grade Loop (SL 2) - Zone 1		1	UEP9D	UECS2	14.93										
	2-Wire Voice Grade Loop (SL 2) - Zone 2		2	UEP9D	UECS2	25.35										
	2-Wire Voice Grade Loop (SL 2) - Zone 3		3	UEP9D	UECS2	50.46										
UNE Port Rate																
ALL STATES																
	2-Wire Voice Grade Port (Centrex) Basic Local Area			UEP9D	UEPYA	2.36	38.85	19.08								
	2-Wire Voice Grade Port (Centrex 800 termination)Basic Local Area			UEP9D	UEPYB	2.36	38.85	19.08								
	2-Wire Voice Grade Port (Centrex / EBS-PSET)3Basic Local Area			UEP9D	UEPYC	2.36	38.85	19.08								
	2-Wire Voice Grade Port (Centrex / EBS-M5009)3Basic Local Area			UEP9D	UEPYD	2.36	38.85	19.08								
	2-Wire Voice Grade Port (Centrex / EBS-M5209))3 Basic Local Area			UEP9D	UEPYE	2.36	38.85	19.08								
	2-Wire Voice Grade Port (Centrex / EBS-M5112))3 Basic Local Area			UEP9D	UEPYF	2.36	38.85	19.08								
	2-Wire Voice Grade Port (Centrex / EBS-M5312))3Basic Local Area			UEP9D	UEPYG	2.36	38.85	19.08								
	2-Wire Voice Grade Port (Centrex / EBS-M5008))3 Basic Local Area			UEP9D	UEPYT	2.36	38.85	19.08								
	2-Wire Voice Grade Port (Centrex / EBS-M5208))3 Basic Local Area			UEP9D	UEPYU	2.36	38.85	19.08								
	2-Wire Voice Grade Port (Centrex / EBS-M5216))3 Basic Local Area			UEP9D	UEPYV	2.36	38.85	19.08								
	2-Wire Voice Grade Port (Centrex / EBS-M5316))3 Basic Local Area			UEP9D	UEPY3	2.36	38.85	19.08								
	2-Wire Voice Grade Port (Centrex with Caller ID) Basic Local Area			UEP9D	UEPYH	2.36	38.85	19.08								
	2-Wire Voice Grade Port (Centrex/Caller ID/Msg Wtg Lamp Indication))4 Basic Local Area			UEP9D	UEPYW	2.36	38.85	19.08								
	2-Wire Voice Grade Port (Centrex/Msg Wtg Lamp Indication))4 Basic Local Area			UEP9D	UEPYJ	2.36	38.85	19.08								
	2-Wire Voice Grade Port (Centrex from diff Serving Wire Center) 2,3-Basic Local Area			UEP9D	UEPYM	2.36	104.41	67.93								
	2-Wire Voice Grade Port (Centrex/differ SWC /EBS-PSET)2,3,4 Basic Local Area			UEP9D	UEPYO	2.36	104.41	67.93								
	2-Wire Voice Grade Port (Centrex/differ SWC /EBS-M5009)2,3,4 Basic Local Area			UEP9D	UEPYP	2.36	104.41	67.93								
	2-Wire Voice Grade Port (Centrex/differ SWC /EBS-5209)2,3,4 Basic Local Area			UEP9D	UEPYQ	2.36	104.41	67.93								
	2-Wire Voice Grade Port (Centrex/differ SWC /EBS-M5112)2,3,4 Basic Local Area			UEP9D	UEPYR	2.36	104.41	67.93								
	2-Wire Voice Grade Port (Centrex/differ SWC /EBS-M5312)2,3,4 Basic Local Area			UEP9D	UEPYS	2.36	104.41	67.93								
	2-Wire Voice Grade Port (Centrex/differ SWC /EBS-M5008)2,3,4 Basic Local Area			UEP9D	UEPY4	2.36	104.41	67.93								

CATEGORY	RATE ELEMENTS	Interim	Zone	BCS	USOC	RATES ($)					Svc Order Submitted Elec per LSR	Svc Order Submitted Manually per LSR	Incremental Charge - Manual Svc Order vs. Electronic-1st	Incremental Charge - Manual Svc Order vs. Electronic-Add'l	Incremental Charge - Manual Svc Order vs. Electronic-Disc 1st	Incremental Charge - Manual Svc Order vs. Electronic-Disc Add'l
						Rec	Nonrecurring		Nonrecurring Disconnect		OSS Rates ($)					
							First	Add'l	First	Add'l	SOMEC	SOMAN	SOMAN	SOMAN	SOMAN	SOMAN
	2-Wire Voice Grade Port (Centrex/differ SWC /EBS-M5208)2, 3 Basic Local Area			UEP9D	UEPY5	2.36	104.41	67.93								
	2-Wire Voice Grade Port (Centrex/differ SWC /EBS-M5216)2,3,4 Basic Local Area			UEP9D	UEPY6	2.36	104.41	67.93								
	2-Wire Voice Grade Port (Centrex/differ SWC /EBS-M5316)2,3,4 Basic Local Area			UEP9D	UEPY7	2.36	104.41	67.93								
	2-Wire Voice Grade Port, Diff Serving Wire Center - 800 Service Term 2,3			UEP9D	UEPYZ	2.36	104.41	67.93								
	2-Wire Voice Grade Port terminated in on Megalink or equivalent Basic Local Area			UEP9D	UEPY9	2.36	38.85	19.08								
	2-Wire Voice Grade Port Terminated on 800 Service Term Basic Local Area			UEP9D	UEPY2	2.36	38.85	19.08								
AL, KY, LA, MS, SC, & TN Only																
	2-Wire Voice Grade Port (Centrex)			UEP9D	UEPQA	2.36	38.85	19.08								
	2-Wire Voice Grade Port (Centrex 800 termination)			UEP9D	UEPQB	2.36	38.85	19.08								
	2-Wire Voice Grade Port (Centrex / EBS-PSET)4			UEP9D	UEPQC	2.36	38.85	19.08								
	2-Wire Voice Grade Port (Centrex / EBS-M5009)4			UEP9D	UEPQD	2.36	38.85	19.08								
	2-Wire Voice Grade Port (Centrex / EBS-M5209)4			UEP9D	UEPQE	2.36	38.85	19.08								
	2-Wire Voice Grade Port (Centrex / EBS-M5112)4			UEP9D	UEPQF	2.36	38.85	19.08								
	2-Wire Voice Grade Port (Centrex / EBS-M5312)4			UEP9D	UEPQG	2.36	38.85	19.08								
	2-Wire Voice Grade Port (Centrex / EBS-M5008)4			UEP9D	UEPQT	2.36	38.85	19.08								
	2-Wire Voice Grade Port (Centrex / EBS-M5208)4			UEP9D	UEPQU	2.36	38.85	19.08								
	2-Wire Voice Grade Port (Centrex / EBS-M5216)4			UEP9D	UEPQV	2.36	38.85	19.08								
	2-Wire Voice Grade Port (Centrex / EBS-M5316)4			UEP9D	UEPQ3	2.36	38.85	19.08								
	2-Wire Voice Grade Port (Centrex with Caller ID)			UEP9D	UEPQH	2.36	38.85	19.08								
	2-Wire Voice Grade Port (Centrex/Caller ID/Msg Wtg Lamp Indication)4			UEP9D	UEPQW	2.36	38.85	19.08								
	2-Wire Voice Grade Port (Centrex/Msg Wtg Lamp Indication)4			UEP9D	UEPQJ	2.36	38.85	19.08								
	2-Wire Voice Grade Port (Centrex from diff Serving Wire Center) 2,3			UEP9D	UEPQM	2.36	104.41	67.93								
	2-Wire Voice Grade Port (Centrex/differ SWC /EBS-PSET)2,3,4			UEP9D	UEPQO	2.36	104.41	67.93								
	2-Wire Voice Grade Port (Centrex/differ SWC /EBS-M5009)2,3,4			UEP9D	UEPQP	2.36	104.41	67.93								
	2-Wire Voice Grade Port (Centrex/differ SWC /EBS-5209)2,3,4			UEP9D	UEPQQ	2.36	104.41	67.93								
	2-Wire Voice Grade Port (Centrex/differ SWC /EBS-M5112)2,3,4			UEP9D	UEPQR	2.36	104.41	67.93								
	2-Wire Voice Grade Port (Centrex/differ SWC /EBS-M5312)2,3,4			UEP9D	UEPQS	2.36	104.41	67.93								
	2-Wire Voice Grade Port (Centrex/differ SWC /EBS-M5008)2,3,4			UEP9D	UEPQ4	2.36	104.41	67.93								
	2-Wire Voice Grade Port (Centrex/differ SWC /EBS-M5208)2,3,4			UEP9D	UEPQ5	2.36	104.41	67.93								
	2-Wire Voice Grade Port (Centrex/differ SWC /EBS-M5216)2,3,4			UEP9D	UEPQ6	2.36	104.41	67.93								
	2-Wire Voice Grade Port (Centrex/differ SWC /EBS-M5316)2,3,4			UEP9D	UEPQ7	2.36	104.41	67.93								
	2-Wire Voice Grade Port, Diff Serving Wire Center - 800 Service Term 2,3			UEP9D	UEPQZ	2.36	104.41	67.93								
	2-Wire Voice Grade Port terminated in on Megalink or equivalent			UEP9D	UEPQ9	2.36	38.85	19.08								
	2-Wire Voice Grade Port Terminated on 800 Service Term			UEP9D	UEPQ2	2.36	38.85	19.08								
Local Switching																
	Centrex Intercom Funtionality, per port			UEP9D	URECS	0.8577										
Features																
	All Standard Features Offered, per port			UEP9D	UEPVF	0.00										
	All Select Features Offered, per port			UEP9D	UEPVS	0.00	412.25									
	All Centrex Control Features Offered, per port			UEP9D	UEPVC	0.00										
NARS																
	Unbundled Network Access Register - Combination			UEP9D	UARCX	0.00	0.00	0.00	0.00	0.00						
	Unbundled Network Access Register - Inward			UEP9D	UAR1X	0.00	0.00	0.00	0.00	0.00						
	Unbundled Network Access Register - Outdial			UEP9D	UAROX	0.00	0.00	0.00	0.00	0.00						
Miscellaneous Terminations																

UNBUNDLED NETWORK ELEMENTS - Louisiana

Attachment: 2 Ex. A

CATEGORY	RATE ELEMENTS	Interim	Zone	BCS	USOC	RATES ($)					Svc Order Submitted Elec per LSR	Svc Order Submitted Manually per LSR	Incremental Charge - Manual Svc Order vs. Electronic-1st	Incremental Charge - Manual Svc Order vs. Electronic-Add'l	Incremental Charge - Manual Svc Order vs. Electronic-Disc 1st	Incremental Charge - Manual Svc Order vs. Electronic-Disc Add'l
						Rec	Nonrecurring		Nonrecurring Disconnect		OSS Rates ($)					
							First	Add'l	First	Add'l	SOMEC	SOMAN	SOMAN	SOMAN	SOMAN	SOMAN
2-Wire Trunk Side																
	Trunk Side Terminations, each			UEP9D	CEND6	8.29	115.85	18.20								
4-Wire Digital (1.544 Megabits)																
	DS1 Circuit Terminations, each			UEP9D	M1HD1	68.47	196.18	98.62								
	DS0 Channels Activiated per Channel			UEP9D	M1HDO	0.00	14.06									
Interoffice Channel Mileage - 2-Wire																
	Interoffice Channel Facilities Termination			UEP9D	M1GBC	22.60	39.36	26.62								
	Interoffice Channel mileage, per mile or fraction of mile			UEP9D	M1GBM	0.013										
Feature Activations (DS0) Centrex Loops on Channelized DS1 Service																
D4 Channel Bank Feature Activations																
	Feature Activation on D-4 Channel Bank Centrex Loop Slot			UEP9D	1PQWS	0.6497										
	Feature Activation on D-4 Channel Bank FX line Side Loop Slot			UEP9D	1PQW6	0.6497										
	Feature Activation on D-4 Channel Bank FX Trunk Side Loop Slot			UEP9D	1PQW7	0.6497										
	Feature Activation on D-4 Channel Bank Centrex Loop Slot - Different Wire Center			UEP9D	1PQWP	0.6497										
	Feature Activation on D-4 Channel Bank Private Line Loop Slot			UEP9D	1PQWV	0.6497										
	Feature Activation on D-4 Channel Bank Tjie Line/Trunk Loop Slot			UEP9D	1PQWQ	0.6497										
	Feature Activation on D-4 Channel Bank WATS Loop Slot			UEP9D	1PQWA	0.6497										
Non-Recurring Charges (NRC) Associated with UNE-P Centrex																
	NRC Conversion Currently Combined Switch-As-Is with allowed changes, per port			UEP9D	USAC2		0.10	0.10								
	Conversion of existing Centrex Common Block, each			UEP9D	USACN		36.66	16.10								
	New Centrex Standard Common Block			UEP9D	M1ACS	0.00	680.40									
	New Centrex Customized Common Block			UEP9D	M1ACC	0.00	680.40									
	NAR Establishment Charge, Per Occasion			UEP9D	URECA	0.00	73.93									
Additional Non-Recurring Charges (NRC)																
	Unbundled Miscellaneous Rate Element, Tag Loop at End Use Premise			UEP9D	URETL		8.33	0.83								
	Unbundled Miscellaneous Rate Element, Tag Design Loop at End Use Premise			UEP9D	URETN		11.20	1.10								
UNE-P CENTREX - EWSD (Valid in AL, FL, KY, LA, MS & TN)																
2-Wire VG Loop/2-Wire Voice Grade Port (Centrex) Combo																
UNE Port/Loop Combination Rates (Non-Design)																
	2-Wire VG Loop/2-Wire Voice Grade Port (Centrex) Port Combo - Non-Design					14.13										
	2-Wire VG Loop/2-Wire Voice Grade Port (Centrex)Port Combo - Non-Design					24.75										
	2-Wire VG Loop/2-Wire Voice Grade Port (Centrex)Port Combo - Non-Design					50.62										
UNE Port/Loop Combination Rates (Design)																
	2-Wire VG Loop/2-Wire Voice Grade Port (Centrex) Port Combo - Design					17.29										
	2-Wire VG Loop/2-Wire Voice Grade Port (Centrex)Port Combo - Design					27.71										
	2-Wire VG Loop/2-Wire Voice Grade Port (Centrex)Port Combo - Design					49.26										
UNE Loop Rate																
	2-Wire Voice Grade Loop (SL 1) - Zone 1		1	UEP9E	UECS1	11.77										
	2-Wire Voice Grade Loop (SL 1) - Zone 2		2	UEP9E	UECS1	22.39										
	2-Wire Voice Grade Loop (SL 1) - Zone 3		3	UEP9E	UECS1	48.26										
	2-Wire Voice Grade Loop (SL 2) - Zone 1		1	UEP9E	UECS2	14.93										
	2-Wire Voice Grade Loop (SL 2) - Zone 2		2	UEP9E	UECS2	25.35										
	2-Wire Voice Grade Loop (SL 2) - Zone 3		3	UEP9E	UECS2	50.46										
UNE Port Rate																
AL, FL, KY, LA, MS, & TN only																
	2-Wire Voice Grade Port (Centrex) Basic Local Area			UEP9E	UEPYA	2.36	38.85	19.08								
	2-Wire Voice Grade Port (Centrex 800 termination)Basic Local Area			UEP9E	UEPYB	2.36	38.85	19.08								
	2-Wire Voice Grade Port (Centrex with Caller ID)1Basic Local Area			UEP9E	UEPYH	2.36	38.85	19.08								

UNBUNDLED NETWORK ELEMENTS - Louisiana

Attachment: 2 Ex. A

CATEGORY	RATE ELEMENTS	Interim	Zone	BCS	USOC	RATES ($)					Svc Order Submitted Elec per LSR	Svc Order Submitted Manually per LSR	Incremental Charge - Manual Svc Order vs. Electronic-1st	Incremental Charge - Manual Svc Order vs. Electronic-Add'l	Incremental Charge - Manual Svc Order vs. Electronic-Disc 1st	Incremental Charge - Manual Svc Order vs. Electronic-Disc Add'l
						Rec	Nonrecurring		Nonrecurring Disconnect		OSS Rates ($)					
							First	Add'l	First	Add'l	SOMEC	SOMAN	SOMAN	SOMAN	SOMAN	SOMAN
	2-Wire Voice Grade Port (Centrex from diff Serving Wire Center)2,3 Basic Local Area			UEP9E	UEPYM	2.36	104.41	67.93								
	2-Wire Voice Grade Port, Diff Serving Wire Center 2,3 - 800 Service Term - Basic Local Area			UEP9E	UEPYZ	2.36	104.41	67.93								
	2-Wire Voice Grade Port terminated in on Megalink or equivalent - Basic Local Area			UEP9E	UEPY9	2.36	38.85	19.08								
	2-Wire Voice Grade Port Terminated on 800 Service Term - Basic Local Area			UEP9E	UEPY2	2.36	38.85	19.08								
AL, KY, LA, MS, & TN Only																
	2-Wire Voice Grade Port (Centrex)			UEP9E	UEPQA	2.36	38.85	19.08								
	2-Wire Voice Grade Port (Centrex 800 termination)			UEP9E	UEPQB	2.36	38.85	19.08								
	2-Wire Voice Grade Port (Centrex with Caller ID)1			UEP9E	UEPQH	2.36	38.85	19.08								
	2-Wire Voice Grade Port (Centrex from diff Serving Wire Center)2,3			UEP9E	UEPQM	2.36	104.41	67.93								
	2-Wire Voice Grade Port, Diff Serving Wire Center 2,3 - 800 Service Term			UEP9E	UEPQZ	2.36	104.41	67.93								
	2-Wire Voice Grade Port terminated in on Megalink or equivalent			UEP9E	UEPQ9	2.36	38.85	19.08								
	2-Wire Voice Grade Port Terminated on 800 Service Term			UEP9E	UEPQ2	2.36	38.85	19.08								
Local Switching																
	Centrex Intercom Funtionality, per port			UEP9E	URECS	0.8577										
Features																
	All Standard Features Offered, per port			UEP9E	UEPVF	0.00										
	All Select Features Offered, per port			UEP9E	UEPVS	0.00	412.25									
	All Centrex Control Features Offered, per port			UEP9E	UEPVC	0.00										
NARS																
	Unbundled Network Access Register - Combination			UEP9E	UARCX	0.00	0.00	0.00	0.00	0.00						
	Unbundled Network Access Register - Indial			UEP9E	UAR1X	0.00	0.00	0.00	0.00	0.00						
	Unbundled Network Access Register - Outdial			UEP9E	UAROX	0.00	0.00	0.00	0.00	0.00						
Miscellaneous Terminations																
2-Wire Trunk Side																
	Trunk Side Terminations, each			UEP9E	CEND6	8.29	115.85	18.20								
4-Wire Digital (1.544 Megabits)																
	DS1 Circuit Terminations, each			UEP9E	M1HD1	68.47	196.18	92.92								
	DS0 Channel Activated Per Channel			UEP9E	M1HDO	0.00	14.06									
Interoffice Channel Mileage - 2-Wire																
	Interoffice Channel Facilities Termination			UEP9E	M1GBC	22.60	39.36	26.62								
	Interoffice Channel mileage, per mile or fraction of mile			UEP9E	M1GBM	0.013										
Feature Activations (DS0) Centrex Loops on Channelized DS1 Service																
D4 Channel Bank Feature Activations																
	Feature Activation on D-4 Channel Bank Centrex Loop Slot			UEP9E	1PQWS	0.6497										
	Feature Activation on D-4 Channel Bank FX line Side Loop Slot			UEP9E	1PQW6	0.6497										
	Feature Activation on D-4 Channel Bank FX Trunk Side Loop Slot			UEP9E	1PQW7	0.6497										
	Feature Activation on D-4 Channel Bank Centrex Loop Slot - Different Wire Center			UEP9E	1PQWP	0.6497										
	Feature Activation on D-4 Channel Bank Private Line Loop Slot			UEP9E	1PQWV	0.6497										
	Feature Activation on D-4 Channel Bank Tjie Line/Trunk Loop Slot			UEP9E	1PQWQ	0.6497										
	Feature Activation on D-4 Channel Bank WATS Loop Slot			UEP9E	1PQWA	0.6497										
Non-Recurring Charges (NRC) Associated with UNE-P Centrex																
	NRC Conversion Currently Combined Switch-As-Is with allowed changes, per port			UEP9E	USAC2		0.10	0.10								
	Conversion of Existing Centrex Common Block, each			UEP9E	USACN		36.66	16.10								
	New Centrex Standard Common Block			UEP9E	M1ACS	0.00	680.40									
	New Centrex Customized Common Block			UEP9E	M1ACC	0.00	680.40									
	NAR Establishment Charge, Per Occasion			UEP9E	URECA	0.00	73.93									
Additional Non-Recurring Charges (NRC)																
	Unbundled Miscellaneous Rate Element, Tag Loop at End Use Premise			UEP9E	URETL		8.33	0.83								
	Unbundled Miscellaneous Rate Element, Tag Design Loop at End Use Premise			UEP9E	URETN		11.20	1.10								

UNBUNDLED NETWORK ELEMENTS - Louisiana

Attachment: 2 Ex. A

CATEGORY	RATE ELEMENTS	Interim	Zone	BCS	USOC	RATES ($) Rec	Nonrecurring First	Nonrecurring Add'l	Nonrecurring Disconnect First	Nonrecurring Disconnect Add'l	Svc Order Submitted Elec per LSR	Svc Order Submitted Manually per LSR	Incremental Charge - Manual Svc Order vs. Electronic-1st	Incremental Charge - Manual Svc Order vs. Electronic-Add'l	Incremental Charge - Manual Svc Order vs. Electronic-Disc 1st	Incremental Charge - Manual Svc Order vs. Electronic-Disc Add'l
											OSS Rates ($)					
							First	Add'l	First	Add'l	SOMEC	SOMAN	SOMAN	SOMAN	SOMAN	SOMAN
	UNE-P CENTREX - DCO - Valid in AL, KY, LA, MS, & TN)															
	2-Wire VG Loop/2-Wire Voice Grade Port (Centrex) Combo															
	UNE Port/Loop Combination Rates (Non-Design)															
	2-Wire VG Loop/2-Wire Voice Grade Port (Centrex) Port Combo - Non-Design					14.13										
	2-Wire VG Loop/2-Wire Voice Grade Port (Centrex)Port Combo - Non-Design					24.75										
	2-Wire VG Loop/2-Wire Voice Grade Port (Centrex)Port Combo - Non-Design					50.62										
	UNE Port/Loop Combination Rates (Design)															
	2-Wire VG Loop/2-Wire Voice Grade Port (Centrex) Port Combo - Design					17.29										
	2-Wire VG Loop/2-Wire Voice Grade Port (Centrex)Port Combo - Design					27.71										
	2-Wire VG Loop/2-Wire Voice Grade Port (Centrex)Port Combo - Design					49.26										
	UNE Loop Rate															
	2-Wire Voice Grade Loop (SL 1) - Zone 1		1	UEP93	UECS1	11.77										
	2-Wire Voice Grade Loop (SL 1) - Zone 2		2	UEP93	UECS1	22.36										
	2-Wire Voice Grade Loop (SL 1) - Zone 3		3	UEP93	UECS1	48.26										
	2-Wire Voice Grade Loop (SL 2) - Zone 1		1	UEP93	UECS2	14.93										
	2-Wire Voice Grade Loop (SL 2) - Zone 2		2	UEP93	UECS2	25.35										
	2-Wire Voice Grade Loop (SL 2) - Zone 3		3	UEP93	UECS2	50.46										
	UNE Port Rate															
	AL, KY, LA, MS, & TN only															
	2-Wire Voice Grade Port (Centrex) Basic Local Area			UEP93	UEPYA	2.36	38.85	19.08								
	2-Wire Voice Grade Port (Centrex 800 termination)Basic Local Area			UEP93	UEPYB	2.36	38.85	19.08								
	2-Wire Voice Grade Port (Centrex with Caller ID)1Basic Local Area			UEP93	UEPYH	2.36	38.85	19.08								
	2-Wire Voice Grade Port (Centrex from diff Serving Wire Center)2,3 Basic Local Area			UEP93	UEPYM	2.36	104.41	67.93								
	2-Wire Voice Grade Port, Diff Serving Wire Center - 2,3 - 800 Service Term - Basic Local Area			UEP93	UEPYZ	2.36	104.41	67.93								
	2-Wire Voice Grade Port terminated in on Megalink or equivalent - Basic Local Area			UEP93	UEPY9	2.36	38.85	19.08								
	2-Wire Voice Grade Port Terminated on 800 Service Term - Basic Local Area			UEP93	UEPY2	2.36	38.85	19.08								
	2-Wire Voice Grade Port (Centrex)			UEP93	UEPQA	2.36	38.85	19.08								
	2-Wire Voice Grade Port (Centrex 800 termination)			UEP93	UEPQB	2.36	38.85	19.08								
	2-Wire Voice Grade Port (Centrex with Caller ID)1			UEP93	UEPQH	2.36	38.85	19.08								
	2-Wire Voice Grade Port (Centrex from diff Serving Wire Center)2,3			UEP93	UEPQM	2.36	104.41	67.93								
	2-Wire Voice Grade Port, Diff Serving Wire Center - 2,3 -800 Service Term			UEP93	UEPQZ	2.36	104.41	67.93								
	2-Wire Voice Grade Port terminated in on Megalink or equivalent			UEP93	UEPQ9	2.36	38.85	19.08								
	2-Wire Voice Grade Port Terminated on 800 Service Term			UEP93	UEPQ2	2.36	38.85	19.08								
	Local Switching															
	Centrex Intercom Funtionality, per port			UEP93	URECS	0.8577										
	Features															
	All Standard Features Offered, per port			UEP93	UEPVF	0.00	73.93	27.14								
	All Centrex Control Features Offered, per port			UEP93	UEPVC	0.00	73.93	27.14								
	NARS															
	Unbundled Network Access Register - Combination			UEP93	UARCX	0.00	0.00	0.00	0.00	0.00						
	Unbundled Network Access Register - Indial			UEP93	UAR1X	0.00	0.00	0.00	0.00	0.00						
	Unbundled Network Access Register - Outdial			UEP93	UAROX	0.00	0.00	0.00	0.00	0.00						
	Miscellaneous Terminations															
	2-Wire Trunk Side															
	Trunk Side Terminations, each			UEP93	CEND6	8.27	115.85	18.20								
	4-Wire Digital (1.544 Megabits)															
	DS1 Circuit Terminations, each			UEP93	M1HD1	68.47	196.18	92.92								
	DS0 Channels Activated, Per Channel			UEP93	M1HDO	0.00	14.06									
	Interoffice Channel Mileage - 2-Wire															

UNBUNDLED NETWORK ELEMENTS - Louisiana

Attachment: 2 Ex. A

CATEGORY	RATE ELEMENTS	Interim	Zone	BCS	USOC	RATES ($)					Svc Order Submitted Elec per LSR	Svc Order Submitted Manually per LSR	Incremental Charge - Manual Svc Order vs. Electronic-1st	Incremental Charge - Manual Svc Order vs. Electronic-Add'l	Incremental Charge - Manual Svc Order vs. Electronic-Disc 1st	Incremental Charge - Manual Svc Order vs. Electronic-Disc Add'l
						Rec	Nonrecurring		Nonrecurring Disconnect		OSS Rates ($)					
							First	Add'l	First	Add'l	SOMEC	SOMAN	SOMAN	SOMAN	SOMAN	SOMAN
	Interoffice Channel Facilities Termination			UEP93	M1GBC	22.60	39.36	26.62								
	Interoffice Channel mileage, per mile or fraction of mile			UEP93	M1GBM	0.013										
	Feature Activations (DS0) Centrex Loops on Channelized DS1 Service															
	D4 Channel Bank Feature Activations															
	Feature Activation on D-4 Channel Bank Centrex Loop Slot			UEP93	1PQWS	0.6497										
	Feature Activation on D-4 Channel Bank FX Line Side Loop Slot			UEP93	1PQW6	0.6497										
	Feature Activation on D-4 Channel Bank FX Trunk Side Loop Slot			UEP93	1PQW7	0.6497										
	Feature Activation on D-4 Channel Bank Centrex Loop Slot - Different Wire Center			UEP93	1PQWP	0.6497										
	Feature Activation on D-4 Channel Bank Private Line Loop Slot			UEP93	1PQWV	0.6497										
	Feature Activation on D-4 Channel Bank Tie Line/Trunk Loop Slot			UEP93	1PQWQ	0.6497										
	Feature Activation on D-4 Channel Bank WATS Loop Slot			UEP93	1PQWA	0.6497										
	Non-Recurring Charges (NRC) Associated with UNE-P Centrex															
	NRC Conversion Currently Combined Switch-As-Is with allowed changes, per port			UEP93	USAC2		0.10	0.10								
	Conversion of Existing Centrex Common Block, each			UEP93	USACN		36.66	16.10								
	New Centrex Standard Common Block			UEP93	M1ACS	0.00	680.40									
	New Centrex Customized Common Block			UEP93	M1ACC	0.00	680.40									
	NAR Establishment Charge, Per Occasion			UEP93	URECA	0.00	73.93									
	Additional Non-Recurring Charges (NRC)															
	Unbundled Miscellaneous Rate Element, Tag Loop at End Use Premise			UEP93	URETL		8.33	0.83								
	Unbundled Miscellaneous Rate Element, Tag Design Loop at End Use Premise			UEP93	URETN		11.20	1.10								
	Note 1 - Required Port for Centrex Control in 1AESS, 5ESS & EWSD															
	Note 2 - Requres Interoffice Channel Mileage															
	Note 3 - Installation is combination of Installation charge for SL2 Loop and Port															
	Note 4 - Requires Specific Customer Premises Equipment															
	Note: Rates displaying an "I" in Interim column are interim as a result of a Commission order.															

UNBUNDLED NETWORK ELEMENTS - Mississippi

Attachment: 2 Ex. A

CATEGORY	RATE ELEMENTS	Interim	Zone	.	USOC	RATES ($) Rec	Nonrecurring First	Nonrecurring Add'l	Nonrecurring Disconnect First	Nonrecurring Disconnect Add'l	Svc Order Submitted Elec per LSR	Svc Order Submitted Manually per LSR	Incremental Charge - Manual Svc Order vs. Electronic- 1st	Incremental Charge - Manual Svc Order vs. Electronic- Add'l	Incremental Charge - Manual Svc Order vs. Electronic- Disc 1st	Incremental Charge - Manual Svc Order vs. Electronic- Disc Add'l
											OSS Rates ($)					
											SOMEC	SOMAN	SOMAN	SOMAN	SOMAN	SOMAN
	The "Zone" shown in the sections for stand-alone loops or loops as part of a combination refers to Geographically Deaveraged UNE Zones. To view Geographically Deaveraged UNE Zone Designations by Central Office, refer to internet Website: http://www.interconnection.bellsouth.com/become_a_clec/html/interconnection.htm															
OPERATIONAL SUPPORT SYSTEMS (OSS) - "REGIONAL RATES"																
	NOTE: (1) CLEC should contact its contract negotiator if it prefers the "state specific" OSS charges as ordered by the State Commissions. The OSS charges currently contained in this rate exhibit are the BellSouth "regional" service ordering charges. CLEC may elect either the state specific Commission ordered rates for the service ordering charges, or CLEC may elect the regional service ordering charge, however, CLEC can not obtain a mixture of the two regardless if CLEC has a interconnection contract established in each of the 9 states.															
	NOTE: (2) Any element that can be ordered electronically will be billed according to the SOMEC rate listed in this category. Please refer to BellSouth's Local Ordering Handbook (LOH) to determine if a product can be ordered electronically. For those elements that cannot be ordered electronically at present per the LOH, the listed SOMEC rate in this category reflects the charge that would be billed to a CLEC once electronic ordering capabilities come on-line for that element. Otherwise, the manual ordering charge, SOMAN, will be applied to a CLECs bill when it submits an LSR to BellSouth.															
	OSS - Electronic Service Order Charge, Per Local Service Request (LSR) - UNE Only				SOMEC		3.50	0.00	3.50	0.00						
	OSS - Manual Service Order Charge, Per Local Service Request (LSR) - UNE Only				SOMAN		15.75	0.00	1.97	0.00						
UNE SERVICE DATE ADVANCEMENT CHARGE																
	NOTE: The Expedite charge will be maintained commensurate with BellSouth's FCC No.1 Tariff, Section 5 as applicable.															
	UNE Expedite Charge per Circuit or Line Assignable USOC, per Day			UAL, UEANL, UCL, UEF, UDF, UEQ, UDL, UENTW, UDN, UEA, UHL, ULC, USL, U1T12, U1T48, U1TD1, U1TD3, U1TDX, U1TO3, U1TS1, U1TVX, UC1BC, UC1BL, UC1CC, UC1CL, UC1DC, UC1DL, UC1EC, UC1EL, UC1FC, UC1FL, UC1GC, UC1GL, UC1HC, UC1HL, UDL12, UDL48, UDLO3, UDLSX, UE3, ULD12, ULD48, ULDD1, ULDD3, ULDDX, ULDO3, ULDS1, ULDVX, UNC1X, UNC3X, UNCDX, UNCNX, UNCSX, UNCVX, UNLD1, UNLD3, UXTD1, UXTD3, UXTS1, U1TUC, U1TUD, U1TUB, U1TUA	SDASP		200.00									
ORDER MODIFICATION CHARGE																
	Order Modification Charge (OMC)						26.21	0.00	0.00	0.00						
	Order Modification Additional Dispatch Charge (OMCAD)						150.00	0.00	0.00	0.00						
UNBUNDLED EXCHANGE ACCESS LOOP																
	2-WIRE ANALOG VOICE GRADE LOOP															
	2-Wire Analog Voice Grade Loop - Service Level 1- Zone 1		1	UEANL	UEAL2	12.03	37.92	17.55	23.48	5.25						
	2-Wire Analog Voice Grade Loop - Service Level 1- Zone 2		2	UEANL	UEAL2	16.87	37.92	17.55	23.48	5.25						
	2-Wire Analog Voice Grade Loop - Service Level 1- Zone 3		3	UEANL	UEAL2	25.68	37.92	17.55	23.48	5.25						
	2-Wire Analog Voice Grade Loop - Service Level 1-Zone 4		4	UEANL	UEAL2	43.85	37.92	17.55	23.48	5.25						
	2-Wire Analog Voice Grade Loop - Service Level 1- Zone 1		1	UEANL	UEASL	12.03	37.92	17.55	23.48	5.25						
	2-Wire Analog Voice Grade Loop - Service Level 1- Zone 2		2	UEANL	UEASL	16.87	37.92	17.55	23.48	5.25						
	2-Wire Analog Voice Grade Loop - Service Level 1- Zone 3		3	UEANL	UEASL	25.68	37.92	17.55	23.48	5.25						
	2-Wire Analog Voice Grade Loop - Service Level 1-Zone 4		4	UEANL	UEASL	43.85	37.92	17.55	23.48	5.25						
	Unbundled Miscellaneous Rate Element, Tag Loop at End User Premise			UEANL	URETL		8.33	0.83								
	Loop Testing - Basic 1st Half Hour			UEANL	URET1		34.36	34.36								
	Loop Testing - Basic Additional Half Hour			UEANL	URETA		19.97	19.97								
	CLEC to CLEC Conversion Charge Without Outside Dispatch			UEANL	UREWO		15.75	8.92								

CATEGORY	RATE ELEMENTS	Interim	Zone	.	USOC	RATES ($)					Svc Order Submitted Elec per LSR	Svc Order Submitted Manually per LSR	Incremental Charge - Manual Svc Order vs. Electronic-1st	Incremental Charge - Manual Svc Order vs. Electronic-Add'l	Incremental Charge - Manual Svc Order vs. Electronic-Disc 1st	Incremental Charge - Manual Svc Order vs. Electronic-Disc Add'l
						Rec	Nonrecurring		Nonrecurring Disconnect		OSS Rates ($)					
							First	Add'l	First	Add'l	SOMEC	SOMAN	SOMAN	SOMAN	SOMAN	SOMAN
	Unbundled Voice Loop, Non-Design Voice Loop, billing for BST providing make-up (Engineering Information - E.I.)			UEANL	UEANM		13.51	13.51								
	Manual Order Coordination for UVL-SL1s (per loop)			UEANL	UEAMC		8.20	8.20								
	Order Coordination for Specified Conversion Time for UVL-SL1 (per LSR)			UEANL	OCOSL		18.19	18.19								
2-WIRE Unbundled COPPER LOOP																
	2-Wire Unbundled Copper Loop - Non-Designed Zone 1		1	UEQ	UEQ2X	11.01	36.53	16.16	22.66	4.42						
	2 Wire Unbundled Copper Loop - Non-Designed - Zone 2		2	UEQ	UEQ2X	11.51	36.53	16.16	22.66	4.42						
	2 Wire Unbundled Copper Loop - Non-Designed - Zone 3		3	UEQ	UEQ2X	11.57	36.53	16.16	22.66	4.42						
	2 Wire Unbundled Copper Loop - Non-Designed - Zone 4		4	UEQ	UEQ2X	13.10	36.53	16.16	22.66	4.42						
	Unbundled Miscellaneous Rate Element, Tag Loop at End User Premise			UEQ	URETL		8.33	0.83								
	Manual Order Coordination 2 Wire Unbundled Copper Loop - Non-Designed (per loop)			UEQ	USBMC		8.20	8.20								
	Unbundled Copper Loop, Non-Design Copper Loop, billing for BST providing make-up (Engineering Information - E.I.)			UEQ	UEQMU		13.51	13.51								
	Loop Testing - Basic 1st Half Hour			UEQ	URET1		34.36	34.36								
	Loop Testing - Basic Additional Half Hour			UEQ	URETA		19.97	19.97								
	CLEC to CLEC Conversion Charge Without Outside Dispatch			UEQ	UREWO		14.24	7.42								
UNBUNDLED EXCHANGE ACCESS LOOP																
2-WIRE ANALOG VOICE GRADE LOOP																
	2 Wire Analog Voice Grade Loop-Service Level 1-Line Splitting-Zone 1		1	UEPSR UEPSB	UEALS	12.03	37.92	17.55	23.48	5.25						
	2 Wire Analog Voice Grade Loop-Service Level 1-Line Splitting-Zone 1		1	UEPSR UEPSB	UEABS	12.03	37.92	17.55	23.48	5.25						
	2 Wire Analog Voice Grade Loop- Service Level 1-Line Splitting-Zone 2		2	UEPSR UEPSB	UEALS	16.87	37.92	17.55	23.48	5.25						
	2 Wire Analog Voice Grade Loop- Service Level 1-Line Splitting-Zone 2		2	UEPSR UEPSB	UEABS	16.87	37.92	17.55	23.48	5.25						
	2 Wire Analog Voice Grade Loop-Service Level 1-Line Splitting-Zone 3		3	UEPSR UEPSB	UEALS	25.68	37.92	17.55	23.48	5.25						
	2 Wire Analog Voice Grade Loop-Service Level 1-Line Splitting-Zone 3		3	UEPSR UEPSB	UEABS	25.68	37.92	17.55	23.48	5.25						
	2 Wire Analog Voice Grade Loop-Service Level 1-Line Splitting-Zone 4		4	UEPSR UEPSB	UEALS	43.85	37.92	17.55	23.48	5.25						
	2 Wire Analog Voice Grade Loop-Service Level 1-Line Splitting-Zone 4		4	UEPSR UEPSB	UEABS	43.85	37.92	17.55	23.48	5.25						
UNBUNDLED EXCHANGE ACCESS LOOP																
2-WIRE ANALOG VOICE GRADE LOOP																
	2-Wire Analog Voice Grade Loop - Service Level 2 w/Loop or Ground Start Signaling - Zone 1		1	UEA	UEAL2	13.89	105.96	68.28	52.82	10.37						
	2-Wire Analog Voice Grade Loop - Service Level 2 w/Loop or Ground Start Signaling - Zone 2		2	UEA	UEAL2	18.75	105.96	68.28	52.82	10.37						
	2-Wire Analog Voice Grade Loop - Service Level 2 w/Loop or Ground Start Signaling - Zone 3		3	UEA	UEAL2	27.55	105.96	68.28	52.82	10.37						
	2-Wire Analog Voice Grade Loop - Service Level 2 w/Loop or Ground Start Signaling - Zone 4		4	UEA	UEAL2	45.72	105.96	68.28	52.82	10.37						
	Order Coordination for Specified Conversion Time (per LSR)			UEA	OCOSL		18.19									
	2-Wire Analog Voice Grade Loop - Service Level 2 w/Reverse Battery Signaling - Zone 1		1	UEA	UEAR2	13.89	105.96	68.28	52.82	10.37						
	2-Wire Analog Voice Grade Loop - Service Level 2 w/Reverse Battery Signaling - Zone 2		2	UEA	UEAR2	18.75	105.96	68.28	52.82	10.37						
	2-Wire Analog Voice Grade Loop - Service Level 2 w/Reverse Battery Signaling - Zone 3		3	UEA	UEAR2	27.55	105.96	68.28	52.82	10.37						
	2-Wire Analog Voice Grade Loop - Service Level 2 w/Reverse Battery Signaling - Zone 4		4	UEA	UEAR2	45.72	105.96	68.28	52.82	10.37						
	Order Coordination for Specified Conversion Time (per LSR)			UEA	OCOSL		18.19									
	CLEC to CLEC Conversion Charge without outside dispatch			UEA	UREWO		87.56	36.29								
	Loop Tagging - Service Level 2 (SL2)			UEA	URETL		11.19	1.10								
4-WIRE ANALOG VOICE GRADE LOOP																
	4-Wire Analog Voice Grade Loop - Zone 1		1	UEA	UEAL4	27.47	132.27	94.59	60.68	14.64						
	4-Wire Analog Voice Grade Loop - Zone 2		2	UEA	UEAL4	38.26	132.27	94.59	60.68	14.64						
	4-Wire Analog Voice Grade Loop - Zone 3		3	UEA	UEAL4	50.03	132.27	94.59	60.68	14.64						
	4-Wire Analog Voice Grade Loop - Zone 4		4	UEA	UEAL4	50.03	132.27	94.59	60.68	14.64						

UNBUNDLED NETWORK ELEMENTS - Mississippi

Attachment: 2 Ex. A

CATEGORY	RATE ELEMENTS	Interim	Zone	.	USOC	RATES ($) Rec	Nonrecurring First	Nonrecurring Add'l	Nonrecurring Disconnect First	Nonrecurring Disconnect Add'l	Svc Order Submitted Elec per LSR (OSS Rates ($)) SOMEC	Svc Order Submitted Manually per LSR SOMAN	Incremental Charge - Manual Svc Order vs. Electronic-1st SOMAN	Incremental Charge - Manual Svc Order vs. Electronic-Add'l SOMAN	Incremental Charge - Manual Svc Order vs. Electronic-Disc 1st SOMAN	Incremental Charge - Manual Svc Order vs. Electronic-Disc Add'l SOMAN
	Order Coordination for Specified Conversion Time (per LSR)			UEA	OCOSL		18.19									
	CLEC to CLEC Conversion Charge without outside dispatch			UEA	UREWO		87.56	36.29								
2-WIRE ISDN DIGITAL GRADE LOOP																
	2-Wire ISDN Digital Grade Loop - Zone 1		1	UDN	U1L2X	21.01	117.61	79.92	52.82	10.37						
	2-Wire ISDN Digital Grade Loop - Zone 2		2	UDN	U1L2X	27.59	117.61	79.92	52.82	10.37						
	2-Wire ISDN Digital Grade Loop - Zone 3		3	UDN	U1L2X	37.34	117.61	79.92	52.82	10.37						
	2-Wire ISDN Digital Grade Loop - Zone 4		4	UDN	U1L2X	59.18	117.61	79.92	52.82	10.37						
	Order Coordination For Specified Conversion Time (per LSR)			UDN	OCOSL		18.19									
	CLEC to CLEC Conversion Charge without outside dispatch			UDN	UREWO		91.46	44.07								
2-WIRE ASYMMETRICAL DIGITAL SUBSCRIBER LINE (ADSL) COMPATIBLE LOOP																
	2 Wire Unbundled ADSL Loop including manual service inquiry & facility reservation - Zone 1		1	UAL	UAL2X	11.11	121.27	70.81	50.38	7.93						
	2 Wire Unbundled ADSL Loop including manual service inquiry & facility reservation - Zone 2		2	UAL	UAL2X	11.47	121.27	70.81	50.38	7.93						
	2 Wire Unbundled ADSL Loop including manual service inquiry & facility reservation - Zone 3		3	UAL	UAL2X	11.74	121.27	70.81	50.38	7.93						
	2 Wire Unbundled ADSL Loop including manual service inquiry & facility reservation - Zone 4		4	UAL	UAL2X	12.69	121.27	70.81	50.38	7.93						
	Order Coordination for Specified Conversion Time (per LSR)			UAL	OCOSL		18.19									
	2 Wire Unbundled ADSL Loop without manual service inquiry & facility reservaton - Zone 1		1	UAL	UAL2W	11.11	96.15	58.03	50.38	7.93						
	2 Wire Unbundled ADSL Loop without manual service inquiry & facility reservaton - Zone 2		2	UAL	UAL2W	11.47	96.15	58.03	50.38	7.93						
	2 Wire Unbundled ADSL Loop without manual service inquiry & facility reservaton - Zone 3		3	UAL	UAL2W	11.74	96.15	58.03	50.38	7.93						
	2 Wire Unbundled ADSL Loop without manual service inquiry & facility reservaton - Zone 4		4	UAL	UAL2W	12.69	96.15	58.03	50.38	7.93						
	Order Coordination for Specified Conversion Time (per LSR)			UAL	OCOSL		18.19									
	CLEC to CLEC Conversion Charge without outside dispatch			UAL	UREWO		86.04	40.33								
2-WIRE HIGH BIT RATE DIGITAL SUBSCRIBER LINE (HDSL) COMPATIBLE LOOP																
	2 Wire Unbundled HDSL Loop including manual service inquiry & facility reservation - Zone 1		1	UHL	UHL2X	8.75	129.98	79.52	50.38	7.93						
	2 Wire Unbundled HDSL Loop including manual service inquiry & facility reservation - Zone 2		2	UHL	UHL2X	9.22	129.98	79.52	50.38	7.93						
	2 Wire Unbundled HDSL Loop including manual service inquiry & facility reservation - Zone 3		3	UHL	UHL2X	9.87	129.98	79.52	50.38	7.93						
	2 Wire Unbundled HDSL Loop including manual service inquiry & facility reservation - Zone 4		4	UHL	UHL2X	10.46	129.98	79.52	50.38	7.93						
	Order Coordination for Specified Conversion Time (per LSR)			UHL	OCOSL		18.19									
	2 Wire Unbundled HDSL Loop without manual service inquiry and facility reservation - Zone 1		1	UHL	UHL2W	8.75	104.86	66.74	50.38	7.93						
	2 Wire Unbundled HDSL Loop without manual service inquiry and facility reservation - Zone 2		2	UHL	UHL2W	9.22	104.86	66.74	50.38	7.93						
	2 Wire Unbundled HDSL Loop without manual service inquiry and facility reservation - Zone 3		3	UHL	UHL2W	9.87	104.86	66.74	50.38	7.93						
	2 Wire Unbundled HDSL Loop without manual service inquiry and facility reservation - Zone 4		4	UHL	UHL2W	10.46	104.86	66.74	50.38	7.93						
	Order Coordination for Specified Conversion Time (per LSR)			UHL	OCOSL		18.19									
	CLEC to CLEC Conversion Charge without outside dispatch			UHL	UREWO		85.98	40.33								
4-WIRE HIGH BIT RATE DIGITAL SUBSCRIBER LINE (HDSL) COMPATIBLE LOOP																
	4 Wire Unbundled HDSL Loop including manual service inquiry and facility reservation - Zone 1		1	UHL	UHL4X	13.78	158.74	108.28	56.72	10.68						
	4-Wire Unbundled HDSL Loop including manual service inquiry and facility reservation - Zone 2		2	UHL	UHL4X	13.43	158.74	108.28	56.72	10.68						
	4-Wire Unbundled HDSL Loop including manual service inquiry and facility reservation - Zone 3		3	UHL	UHL4X	15.59	158.74	108.28	56.72	10.68						
	4-Wire Unbundled HDSL Loop including manual service inquiry and facility reservation - Zone 4		4	UHL	UHL4X	14.46	158.74	108.28	56.72	10.68						
	Order Coordination for Specified Conversion Time (per LSR)			UHL	OCOSL		18.19									
	4-Wire Unbundled HDSL Loop without manual service inquiry and facility reservation - Zone 1		1	UHL	UHL4W	13.78	133.62	95.50	56.72	10.68						
	4-Wire Unbundled HDSL Loop without manual service inquiry and facility reservation - Zone 2		2	UHL	UHL4W	13.43	133.62	95.50	56.72	10.68						

CATEGORY	RATE ELEMENTS	Interim	Zone	.	USOC	RATES ($)					Svc Order Submitted Elec per LSR	Svc Order Submitted Manually per LSR	Incremental Charge - Manual Svc Order vs. Electronic-1st	Incremental Charge - Manual Svc Order vs. Electronic-Add'l	Incremental Charge - Manual Svc Order vs. Electronic-Disc 1st	Incremental Charge - Manual Svc Order vs. Electronic-Disc Add'l
						Rec	Nonrecurring		Nonrecurring Disconnect		OSS Rates ($)					
							First	Add'l	First	Add'l	SOMEC	SOMAN	SOMAN	SOMAN	SOMAN	SOMAN
	4-Wire Unbundled HDSL Loop without manual service inquiry and facility reservation - Zone 3		3	UHL	UHL4W	15.59	133.62	95.50	56.72	10.68						
	4-Wire Unbundled HDSL Loop without manual service inquiry and facility reservation - Zone 4		4	UHL	UHL4W	14.46	133.62	95.50	56.72	10.68						
	Order Coordination for Specified Conversion Time (per LSR)			UHL	OCOSL		18.19									
	CLEC to CLEC Conversion Charge without outside dispatch			UHL	UREWO		85.98	40.33								
4-WIRE DS1 DIGITAL LOOP																
	4-Wire DS1 Digital Loop - Zone 1		1	USL	USLXX	79.08	253.93	158.45	46.10	12.07						
	4-Wire DS1 Digital Loop - Zone 2		2	USL	USLXX	129.38	253.93	158.45	46.10	12.07						
	4-Wire DS1 Digital Loop - Zone 3		3	USL	USLXX	206.74	253.93	158.45	46.10	12.07						
	4-Wire DS1 Digital Loop - Zone 4		4	USL	USLXX	458.46	253.93	158.45	46.10	12.07						
	Order Coordination for Specified Conversion Time (per LSR)			USL	OCOSL		18.19									
	CLEC to CLEC Conversion Charge without outside dispatch			USL	UREWO		100.90	42.96								
4-WIRE 19.2, 56 OR 64 KBPS DIGITAL GRADE LOOP																
	4 Wire Unbundled Digital 19.2 Kbps		1	UDL	UDL19	27.44	126.53	88.85	60.68	14.64						
	4 Wire Unbundled Digital 19.2 Kbps		2	UDL	UDL19	34.55	126.53	88.85	60.68	14.64						
	4 Wire Unbundled Digital 19.2 Kbps		3	UDL	UDL19	40.76	126.53	88.85	60.68	14.64						
	4 Wire Unbundled Digital 19.2 Kbps		4	UDL	UDL19	32.25	126.53	88.85	60.68	14.64						
	4 Wire Unbundled Digital Loop 56 Kbps - Zone 1		1	UDL	UDL56	27.44	126.53	88.85	60.68	14.64						
	4 Wire Unbundled Digital Loop 56 Kbps - Zone 2		2	UDL	UDL56	34.55	126.53	88.85	60.68	14.64						
	4 Wire Unbundled Digital Loop 56 Kbps - Zone 3		3	UDL	UDL56	40.76	126.53	88.85	60.68	14.64						
	4 Wire Unbundled Digital Loop 56 Kbps - Zone 4		4	UDL	UDL56	32.25	126.53	88.85	60.68	14.64						
	Order Coordination for Specified Conversion Time (per LSR)			UDL	OCOSL		18.19									
	4 Wire Unbundled Digital Loop 64 Kbps - Zone 1		1	UDL	UDL64	27.44	126.53	88.85	60.68	14.64						
	4 Wire Unbundled Digital Loop 64 Kbps - Zone 2		2	UDL	UDL64	34.55	126.53	88.85	60.68	14.64						
	4 Wire Unbundled Digital Loop 64 Kbps - Zone 3		3	UDL	UDL64	40.76	126.53	88.85	60.68	14.64						
	4 Wire Unbundled Digital Loop 64 Kbps - Zone 4		4	UDL	UDL64	32.25	126.53	88.85	60.68	14.64						
	Order Coordination for Specified Conversion Time (per LSR)			UDL	OCOSL		18.19									
	CLEC to CLEC Conversion Charge without outside dispatch			UDL	UREWO		101.94	49.66								
2-WIRE Unbundled COPPER LOOP																
	2-Wire Unbundled Copper Loop-Designed including manual service inquiry & facility reservation - Zone 1		1	UCL	UCLPB	11.11	120.34	69.87	50.38	7.93						
	2-Wire Unbundled Copper Loop-Designed including manual service inquiry & facility reservation - Zone 2		2	UCL	UCLPB	11.47	120.34	69.87	50.38	7.93						
	2 Wire Unbundled Copper Loop-Designed including manual service inquiry & facility reservation - Zone 3		3	UCL	UCLPB	11.74	120.34	69.87	50.38	7.93						
	2 Wire Unbundled Copper Loop-Designed including manual service inquiry & facility reservation - Zone 4		4	UCL	UCLPB	12.69	120.34	69.87	50.38	7.93						
	Order Coordination for Unbundled Copper Loops (per loop)			UCL	UCLMC		8.20	8.20								
	2-Wire Unbundled Copper Loop-Designed without manual service inquiry and facility reservation - Zone 1		1	UCL	UCLPW	11.11	95.21	57.09	50.38	7.93						
	2-Wire Unbundled Copper Loop-Designed without manual service inquiry and facility reservation - Zone 2		2	UCL	UCLPW	11.47	95.21	57.09	50.38	7.93						
	2-Wire Unbundled Copper Loop-Designed without manual service inquiry and facility reservation - Zone 3		3	UCL	UCLPW	11.74	95.21	57.09	50.38	7.93						
	2-Wire Unbundled Copper Loop-Designed without manual service inquiry and facility reservation - Zone 4		4	UCL	UCLPW	12.69	95.21	57.09	50.38	7.93						
	Order Coordination for Unbundled Copper Loops (per loop)			UCL	UCLMC		8.20	8.20								
	CLEC to CLEC Conversion Charge without outside dispatch (UCL Des)			UCL	UREWO		95.21	42.40								
4-WIRE COPPER LOOP																
	4-Wire Copper Loop-Designed including manual service inquiry and facility reservation - Zone 1		1	UCL	UCL4S	17.30	144.68	94.22	56.72	10.68						
	4-Wire Copper Loop-Designed including manual service inquiry and facility reservation - Zone 2		2	UCL	UCL4S	18.84	144.68	94.22	56.72	10.68						
	4-Wire Copper Loop-Designed including manual service inquiry and facility reservation - Zone 3		3	UCL	UCL4S	21.33	144.68	94.22	56.72	10.68						
	4-Wire Copper Loop-Designed including manual service inquiry and facility reservation - Zone 4		4	UCL	UCL4S	21.33	144.68	94.22	56.72	10.68						
	Order Coordination for Unbundled Copper Loops (per loop)			UCL	UCLMC		8.20	8.20								
	4-Wire Copper Loop-Designed without manual service inquiry and facility reservation - Zone 1		1	UCL	UCL4W	17.30	119.56	81.44	56.72	10.68						
	4-Wire Copper Loop-Designed without manual service inquiry and facility reservation - Zone 2		2	UCL	UCL4W	18.84	119.56	81.44	56.72	10.68						

CATEGORY		RATE ELEMENTS	Interim	Zone	.	USOC	RATES ($)					Svc Order Submitted Elec per LSR	Svc Order Submitted Manually per LSR	Incremental Charge - Manual Svc Order vs. Electronic-1st	Incremental Charge - Manual Svc Order vs. Electronic-Add'l	Incremental Charge - Manual Svc Order vs. Electronic-Disc 1st	Incremental Charge - Manual Svc Order vs. Electronic-Disc Add'l	
							Rec	Nonrecurring		Nonrecurring Disconnect		OSS Rates ($)						
								First	Add'l	First	Add'l	SOMEC	SOMAN	SOMAN	SOMAN	SOMAN	SOMAN	
		4-Wire Copper Loop-Designed without manual service inquiry and facility reservation - Zone 3		3	UCL	UCL4W	21.33	119.56	81.44	56.72	10.68							
		4-Wire Copper Loop-Designed without manual service inquiry and facility reservation - Zone 4		4	UCL	UCL4W	21.33	119.56	81.44	56.72	10.68							
		Order Coordination for Unbundled Copper Loops (per loop)			UCL	UCLMC		8.20	8.20									
		CLEC to CLEC Conversion Charge without outside dispatch (UCL-Des)			UCL	UREWO		95.21	42.40									
LOOP MODIFICATION																		
		Unbundled Loop Modification, Removal of Load Coils - 2 Wire pair less than or equal to 18k ft, per Unbundled Loop			UAL, UHL, UCL, UEQ, ULS, UEA, UEANL, UEPSR, UEPSB	ULM2L		32.57	32.57									
		Unbundled Loop Modification Removal of Load Coils - 4 Wire less than or equal to 18K ft, per Unbundled Loop			UHL, UCL, UEA	ULM4L		32.57	32.57									
		Unbundled Loop Modification Removal of Bridged Tap Removal, per unbundled loop			UAL, UHL, UCL, UEQ, ULS, UEA, UEANL, UEPSR, UEPSB	ULMBT		32.59	32.59									
SUB-LOOPS																		
	Sub-Loop Distribution																	
		Sub-Loop - Per Cross Box Location - CLEC Feeder Facility Set-Up	I		UEANL	USBSA		259.69										
		Sub-Loop - Per Cross Box Location - Per 25 Pair Panel Set-Up	I		UEANL	USBSB		22.77										
		Sub-Loop - Per Building Equipment Room - CLEC Feeder Facility Set-Up	I		UEANL	USBSC		178.47										
		Sub-Loop - Per Building Equipment Room - Per 25 Pair Panel Set-Up	I		UEANL	USBSD		56.39										
		Sub-Loop Distribution Per 2-Wire Analog Voice Grade Loop - Zone 1	I	1	UEANL	USBN2	7.15	66.18	31.14	45.36	6.71							
		Sub-Loop Distribution Per 2-Wire Analog Voice Grade Loop - Zone 2	I	2	UEANL	USBN2	9.51	66.18	31.14	45.36	6.71							
		Sub-Loop Distribution Per 2-Wire Analog Voice Grade Loop - Zone 3	I	3	UEANL	USBN2	12.45	66.18	31.14	45.36	6.71							
		Sub-Loop Distribution Per 2-Wire Analog Voice Grade Loop - Zone 4		4	UEANL	USBN2	18.26	66.18	31.14	45.36	6.71							
		Order Coordination for Unbundled Sub-Loops, per sub-loop pair			UEANL	USBMC		8.20	8.20									
		Sub-Loop Distribution Per 4-Wire Analog Voice Grade Loop - Zone 1		1	UEANL	USBN4	7.30	79.49	44.45	51.27	9.35							
		Sub-Loop Distribution Per 4-Wire Analog Voice Grade Loop - Zone 2		2	UEANL	USBN4	13.92	79.49	44.45	51.27	9.35							
		Sub-Loop Distribution Per 4-Wire Analog Voice Grade Loop - Zone 3		3	UEANL	USBN4	16.73	79.49	44.45	51.27	9.35							
		Sub-Loop Distribution Per 4-Wire Analog Voice Grade Loop - Zone 4		4	UEANL	USBN4	16.73	79.49	44.45	51.27	9.35							
		Order Coordination for Unbundled Sub-Loops, per sub-loop pair			UEANL	USBMC		8.20	8.20									
		Sub-Loop 2-Wire Intrabuilding Network Cable (INC)	I		UEANL	USBR2	2.29	53.32	18.28	45.36	6.71							
		Order Coordination for Unbundled Sub-Loops, per sub-loop pair			UEANL	USBMC		8.20	8.20									
		Sub-Loop 4-Wire Intrabuilding Network Cable (INC)	I		UEANL	USBR4	4.40	59.60	24.55	51.27	9.35							
		Order Coordination for Unbundled Sub-Loops, per sub-loop pair			UEANL	USBMC		8.20	8.20									
		Loop Testing - Basic 1st Half Hour			UEANL	URET1		34.36	34.36									
		Loop Testing - Basic Additional Half Hour			UEANL	URETA		19.97	19.97									
		2 Wire Copper Unbundled Sub-Loop Distribution - Zone 1	I	1	UEF	UCS2X	6.06	66.18	31.14	45.36	6.71							
		2 Wire Copper Unbundled Sub-Loop Distribution - Zone 2	I	2	UEF	UCS2X	7.09	66.18	31.14	45.36	6.71							
		2 Wire Copper Unbundled Sub-Loop Distribution - Zone 3	I	3	UEF	UCS2X	8.16	66.18	31.14	45.36	6.71							
		2 Wire Copper Unbundled Sub-Loop Distribution - Zone 4		4	UEF	UCS2X	9.90	66.18	31.14	45.36	6.71							
		Order Coordination for Unbundled Sub-Loops, per sub-loop pair			UEF	USBMC		8.20	8.20									
		4 Wire Copper Unbundled Sub-Loop Distribution - Zone 1	I	1	UEF	UCS4X	5.10	79.49	44.45	51.27	9.35							
		4 Wire Copper Unbundled Sub-Loop Distribution - Zone 2	I	2	UEF	UCS4X	9.11	79.49	44.45	51.27	9.35							

UNBUNDLED NETWORK ELEMENTS - Mississippi

Attachment: 2 Ex. A

CATEGORY	RATE ELEMENTS	Interim	Zone	.	USOC	RATES ($) Rec	Nonrecurring First	Nonrecurring Add'l	Nonrecurring Disconnect First	Nonrecurring Disconnect Add'l	Svc Order Submitted Elec per LSR (OSS Rates ($)) SOMEC	Svc Order Submitted Manually per LSR (OSS Rates ($)) SOMAN	Incremental Charge - Manual Svc Order vs. Electronic-1st (OSS Rates ($)) SOMAN	Incremental Charge - Manual Svc Order vs. Electronic-Add'l (OSS Rates ($)) SOMAN	Incremental Charge - Manual Svc Order vs. Electronic-Disc 1st (OSS Rates ($)) SOMAN	Incremental Charge - Manual Svc Order vs. Electronic-Disc Add'l (OSS Rates ($)) SOMAN
	4 Wire Copper Unbundled Sub-Loop Distribution - Zone 3	I	3	UEF	UCS4X	14.00	79.49	44.45	51.27	9.35						
	4 Wire Copper Unbundled Sub-Loop Distribution - Zone 4		4	UEF	UCS4X	14.00	79.49	44.45	51.27	9.35						
	Order Coordination for Unbundled Sub-Loops, per sub-loop pair			UEF	USBMC		8.20	8.20								
	Loop Testing - Basic 1st Half Hour			UEF	URET1		34.36	34.36								
	Loop Testing - Basic Additional Half Hour			UEF	URETA		19.97	19.97								
Unbundled Network Terminating Wire (UNTW)																
	Unbundled Network Terminating Wire (UNTW) per Pair			UENTW	UENPP	0.3366	30.55									
Network Interface Device (NID)																
	Network Interface Device (NID) - 1-2 lines			UENTW	UND12		43.84	28.90								
	Network Interface Device (NID) - 1-6 lines			UENTW	UND16		65.30	50.36								
	Network Interface Device Cross Connect - 2 W			UENTW	UNDC2		5.94	5.94								
	Network Interface Device Cross Connect - 4W			UENTW	UNDC4		5.94	5.94								
UNE OTHER, PROVISIONING ONLY - NO RATE																
	NID - Dispatch and Service Order for NID installation			UENTW	UNDBX	0.00	0.00									
	UNTW Circuit Id Establishment, Provisioning Only - No Rate			UENTW	UENCE	0.00	0.00									
	Unbundled Contract Name, Provisioning Only - No Rate			UEANL,UEF,UEQ,UENTW	UNECN	0.00	0.00									
UNE OTHER, PROVISIONING ONLY - NO RATE																
	Unbundled Contact Name, Provisioning Only - no rate			UAL,UCL,UDC,UDL,UDN,UEA,UHL,USL	UNECN	0.00	0.00									
	Unbundled Sub-Loop Feeder-2 Wire Cross Box Jumper - no rate			UEA,UDN,UCL,UDC	USBFQ	0.00	0.00									
	Unbundled Sub-Loop Feeder-4 Wire Cross Box Jumper - no rate			UEA,USL,UCL,UDL	USBFR	0.00	0.00									
	Unbundled DS1 Loop - Superframe Format Option - no rate			USL	CCOSF	0.00	0.00									
	Unbundled DS1 Loop - Expanded Superframe Format option - no rate			USL	CCOEF	0.00	0.00									
HIGH CAPACITY UNBUNDLED LOCAL LOOP																
	High Capacity Unbundled Local Loop - DS3 - Per Mile per month			UE3	1L5ND	11.20										
	High Capacity Unbundled Local Loop - DS3 - Facility Termination per month			UE3	UE3PX	326.15	522.2495	305.2905	141.7145	99.1185						
	High Capacity Unbundled Local Loop - STS-1 - Per Mile per month			UDLSX	1L5ND	11.20										
	High Capacity Unbundled Local Loop - STS-1 - Facility Termination per month			UDLSX	UDLS1	338.55	522.2495	305.2905	141.7145	99.1185						
LOOP MAKE-UP																
	Loop Makeup - Preordering Without Reservation, per working or spare facility queried (Manual).			UMK	UMKLW		24.12	24.12								
	Loop Makeup - Preordering With Reservation, per spare facility queried (Manual).			UMK	UMKLP		25.58	25.58								
	Loop Makeup--With or Without Reservation, per working or spare facility queried (Mechanized)			UMK	UMKMQ		0.6652	0.6652								
LINE SPLITTING																
LINE SPLITTING																
END USER ORDERING-CENTRAL OFFICE BASED																
	Line Splitting - per line activation DLEC owned splitter			UEPSR UEPSB	UREOS	0.61										
	Line Splitting - per line activation BST owned - physical			UEPSR UEPSB	UREBP	0.61	18.62	10.66	10.04	4.93						
	Line Splitting - per line activation BST owned - virtual			UEPSR UEPSB	UREBV	0.61	18.62	10.66	10.04	4.93						
MAINTENANCE OF SERVICE																
NOTE: The Expedite charge will be maintained commensurate with BellSouth's FCC No.1 Tariff, Section 13.3.1 as applicable.																
	No Trouble Found - per 1/2 hour increments - Basic						80.00	55.00								
	No Trouble Found - per 1/2 hour increments - Overtime						90.00	65.00								
	No Trouble Found - per 1/2 hour increments - Premium						100.00	75.00								
UNBUNDLED DEDICATED TRANSPORT																
INTEROFFICE CHANNEL - DEDICATED TRANSPORT																
	Interoffice Channel - Dedicated Transport - 2-Wire Voice Grade - Per Mile per month			U1TVX	1L5XX	0.0098										
	Interoffice Channel - Dedicated Transport- 2- Wire Voice Grade - Facility Termination			U1TVX	U1TV2	22.52	40.77	27.57	17.26	7.11						
	Interoffice Channel - Dedicated Transpor t- 2-Wire Voice Grade Rev Bat. - Per Mile per month			U1TVX	1L5XX	0.0098										

UNBUNDLED NETWORK ELEMENTS - Mississippi

Attachment: 2 Ex. A

CATEGORY	RATE ELEMENTS	Interim	Zone	.	USOC	RATES ($)					Svc Order Submitted Elec per LSR	Svc Order Submitted Manually per LSR	Incremental Charge - Manual Svc Order vs. Electronic-1st	Incremental Charge - Manual Svc Order vs. Electronic-Add'l	Incremental Charge - Manual Svc Order vs. Electronic-Disc 1st	Incremental Charge - Manual Svc Order vs. Electronic-Disc Add'l
						Rec	Nonrecurring		Nonrecurring Disconnect		OSS Rates ($)					
							First	Add'l	First	Add'l	SOMEC	SOMAN	SOMAN	SOMAN	SOMAN	SOMAN
	Interoffice Channel - Dedicated Transport- 2- Wire VG Rev Bat. - Facility Termination			U1TVX	U1TR2	22.52	40.77	27.57	17.26	7.11						
	Interoffice Channel - Dedicated Transport - 4-Wire Voice Grade - Per Mile per month			U1TVX	1L5XX	0.0098										
	Interoffice Channel - Dedicated Transport - 4- Wire Voice Grade - Facility Termination			U1TVX	U1TV4	19.79	40.77	27.57	17.26	7.11						
	Interoffice Channel - Dedicated Transport - 56 kbps - per mile per month			U1TDX	1L5XX	0.0098										
	Interoffice Channel - Dedicated Transport - 56 kbps - Facility Termination			U1TDX	U1TD5	15.68	40.78	27.57	17.26	7.11						
	Interoffice Channel - Dedicated Transport - 64 kbps - per mile per month			U1TDX	1L5XX	0.0098										
	Interoffice Channel - Dedicated Transport - 64 kbps - Facility Termination			U1TDX	U1TD6	15.68	40.78	27.57	17.26	7.11						
	Interoffice Channel - Dedicated Channel - DS1 - Per Mile per month			U1TD1	1L5XX	0.201										
	Interoffice Channel - Dedicated Tranport - DS1 - Facility Termination			U1TD1	U1TF1	57.33	89.79	82.28	16.86	14.90						
	Interoffice Channel - Dedicated Transport - DS3 - Per Mile per month			U1TD3	1L5XX	4.76										
	Interoffice Channel - Dedicated Transport - DS3 - Facility Termination per month			U1TD3	U1TF3	641.90	280.37	163.70	62.08	60.29						
	Interoffice Channel - Dedicated Transport - STS-1 - Per Mile per month			U1TS1	1L5XX	4.76										
	Interoffice Channel - Dedicated Transport - STS-1 - Facility Termination			U1TS1	U1TFS	644.21	280.37	163.70	62.08	60.29						
DARK FIBER																
	Dark Fiber, Four Fiber Strands, Per Route Mile or Fraction Thereof per month - Local Channel			UDF, UDFCX	1L5DC	68.94										
	Dark Fiber, Four Fiber Strands, Per Route Mile or Fraction Thereof per month - Interoffice Channel			UDF, UDFCX	1L5DF	28.27										
	NRC Dark Fiber - Interoffice Channel			UDF, UDFCX	UDF14		642.79	138.67	326.97	203.85						
	Dark Fiber, Four Fiber Strands, Per Route Mile or Fraction Thereof per month - Local Loop			UDF, UDFCX	1L5DL	68.94										
8XX ACCESS TEN DIGIT SCREENING																
	8XX Access Ten Digit Screening, Per Call					0.0006216										
	8XX Access Ten Digit Screening, w/ 8FL No. Delivery, per query					0.0006216										
	8XX Access Ten Digit Screening, w/ POTS No. Delivery, per query					0.0006216										
LINE INFORMATION DATA BASE ACCESS (LIDB)																
	LIDB Common Transport Per Query					0.0000197										
	LIDB Validation Per Query					0.0137053										
	LIDB Originating Point Code Establishment or Change			OQU	NRBPX		34.52	34.52	42.33	42.33						
CALLING NAME (CNAM) SERVICE																
	CNAM for DB Owners, Per Query					0.0010231										
	CNAM for Non DB Owners, Per Query					0.0010231										
LNP Query Service																
	LNP Charge Per query					0.0008477										
	LNP Service Establishment Manual						12.59	12.59	11.58	11.58						
	LNP Service Provisioning with Point Code Establishment						596.94	304.96	270.49	198.89						
SELECTIVE ROUTING																
	Selective Routing Per Unique Line Class Code Per Request Per Switch						85.19	85.19	14.19	14.19						
VIRTUAL COLLOCATION																
	Virtual Collocation-2 Wire Cross Connects (Loop) for Line Splitting			UEPSR UEPSB	VE1LS	0.0268	12.37	11.87	6.04	5.45						
PHYSICAL COLLOCATION																
	Physical Collocation-2 Wire Cross Connects (Loop) for Line Splitting			UEPSR UEPSB	PE1LS	0.0288	12.37	11.87	6.04	5.45						
AIN SELECTIVE CARRIER ROUTING																
	Regional Service Establishment						101,685.12		8,640.51							
	End Office Establishment						167.49	167.49	1.71	1.71						
	Query NRC, per query					0.0030502										

UNBUNDLED NETWORK ELEMENTS - Mississippi

Attachment: 2 Ex. A

CATEGORY	RATE ELEMENTS	Interim	Zone	.	USOC	RATES ($) Rec	Nonrecurring First	Nonrecurring Add'l	Nonrecurring Disconnect First	Nonrecurring Disconnect Add'l	Svc Order Submitted Elec per LSR	Svc Order Submitted Manually per LSR	Incremental Charge - Manual Svc Order vs. Electronic-1st	Incremental Charge - Manual Svc Order vs. Electronic-Add'l	Incremental Charge - Manual Svc Order vs. Electronic-Disc 1st	Incremental Charge - Manual Svc Order vs. Electronic-Disc Add'l
											OSS Rates ($)					
							First	Add'l	First	Add'l	SOMEC	SOMAN	SOMAN	SOMAN	SOMAN	SOMAN
AIN - BELLSOUTH AIN SMS ACCESS SERVICE																
	AIN SMS Access Service - Service Establishment, Per State, Initial Setup			A1N	CAMSE		39.67	39.67	40.92	40.92						
	AIN SMS Access Service - Port Connection - Dial/Shared Access			A1N	CAMDP		7.87	7.87	9.14	9.14						
	AIN SMS Access Service - Port Connection - ISDN Access			A1N	CAM1P		7.87	7.87	9.14	9.14						
	AIN SMS Access Service - User Identification Codes - Per User ID Code			A1N	CAMAU		35.21	35.21	27.21	27.21						
	AIN SMS Access Service - Security Card, Per User ID Code, Initial or Replacement			A1N	CAMRC		42.13	42.13	11.78	11.78						
	AIN SMS Access Service - Storage, Per Unit (100 Kilobytes)					0.0021										
	AIN SMS Access Service - Session, Per Minute					0.5649										
	AIN SMS Access Service - Company Performed Session, Per Minute					0.8393										
SIGNALING (CCS7)																
	CCS7 Signaling Usage, Per TCAP Message					0.0000597										
	CCS7 Signaling Usage, Per ISUP Message					0.0000149										
911 PBX LOCATE																
911 PBX LOCATE DATABASE CAPABILITY																
	Service Establishment per CLEC per End User Account			9PBDC	9PBEU		1,822.00									
	Changes to TN Range or Customer Profile			9PBDC	9PBTN		182.29									
	Per Telephone Number (Monthly)			9PBDC	9PBMM	0.07										
	Change Company (Service Provider) ID			9PBDC	9PBPC		535.11									
	PBX Locate Service Support per CLEC (Monthlt)			9PBDC	9PBMR	178.43										
	Service Order Charge			9PBDC	9PBSC		15.75									
911 PBX LOCATE TRANSPORT COMPONENT																
See Att 3																
ENHANCED EXTENDED LINK (EELs)																
NOTE: The monthly recurring and non-recurring charges below will apply and the Switch-As-Is Charge will not apply for UNE combinations provisioned as ' Ordinarily Combined' Network Elements.																
NOTE: The monthly recurring and the Switch-As-Is Charge and not the non-recurring charges below will apply for UNE combinations provisioned as ' Currently Combined' Network Elements.																
2-WIRE VOICE GRADE LOOP FOR USE IN A COMBINATION																
	2-Wire VG Loop (SL2) in Combination - Zone 1		1	UNCVX	UEAL2	13.89	105.96	68.28	52.82	10.37						
	2-Wire VG Loop (SL2) in Combination - Zone 2		2	UNCVX	UEAL2	18.75	105.96	68.28	52.82	10.37						
	2-Wire VG Loop (SL2) in Combination - Zone 3		3	UNCVX	UEAL2	27.55	105.96	68.28	52.82	10.37						
	2-Wire VG Loop (SL2) in Combination - Zone 4		4	UNCVX	UEAL2	45.72	105.96	68.28	52.82	10.37						
	Voice Grade COCI - Per Month			UNCVX	1D1VG	0.5737	6.62	4.74								
4-WIRE VOICE GRADE LOOP FOR USE IN A COMBINATION																
	4-Wire Analog Voice Grade Loop in Combination - Zone 1		1	UNCVX	UEAL4	27.47	132.27	94.59	60.68	14.64						
	4-Wire Analog Voice Grade Loop in Combination - Zone 2		2	UNCVX	UEAL4	38.26	132.27	94.59	60.68	14.64						
	4-Wire Analog Voice Grade Loop in Combination - Zone 3		3	UNCVX	UEAL4	50.03	132.27	94.59	60.68	14.64						
	4-Wire Analog Voice Grade Loop in Combination - Zone 4		4	UNCVX	UEAL4	50.03	132.27	94.59	60.68	14.64						
	Voice Grade COCI in combination - per month			UNCVX	1D1VG	0.5737	6.62	4.74								
4-WIRE 56 KBPS DIGITAL LOOP FOR USE IN A COMBINATION																
	4-Wire 56Kbps Digital Grade Loop in Combination - Zone 1		1	UNCDX	UDL56	27.44	126.53	88.85	60.68	14.64						
	4-Wire 56Kbps Digital Grade Loop in Combination - Zone 2		2	UNCDX	UDL56	34.55	126.53	88.85	60.68	14.64						
	4-Wire 56Kbps Digital Grade Loop in Combination - Zone 3		3	UNCDX	UDL56	40.76	126.53	88.85	60.68	14.64						
	4-Wire 56Kbps Digital Grade Loop in Combination - Zone 4		4	UNCDX	UDL56	32.25	126.53	88.85	60.68	14.64						
	OCU-DP COCI (data) per month (2.4-64kbs)			UNCDX	1D1DD	1.22	6.62	4.74								
4-WIRE 64 KBPS DIGITAL LOOP FOR USE IN A COMBINATIION																
	4-Wire 64Kbps Digital Grade Loop in Combination - Zone 1		1	UNCDX	UDL64	27.44	126.53	88.85	60.68	14.64						
	4-Wire 64Kbps Digital Grade Loop in Combination - Zone 2		2	UNCDX	UDL64	34.55	126.53	88.85	60.68	14.64						
	4-Wire 64Kbps Digital Grade Loop in Combination - Zone 3		3	UNCDX	UDL64	40.76	126.53	88.85	60.68	14.64						
	4-Wire 64Kbps Digital Grade Loop in Combination - Zone 4		4	UNCDX	UDL64	32.25	126.53	88.85	60.68	14.64						
	OCU-DP COCI (data) - in combination - per month (2.4-64kbs)			UNCDX	1D1DD	1.22	6.62	4.74								
2-WIRE ISDN LOOP FOR USE IN COMBINATION																
	2-Wire ISDN Loop in Combination - Zone 1		1	UNCNX	U1L2X	21.01	117.61	79.92	52.82	10.37						
	2-Wire ISDN Loop in Combination - Zone 2		2	UNCNX	U1L2X	27.59	117.61	79.92	52.82	10.37						
	2-Wire ISDN Loop in Combination - Zone 3		3	UNCNX	U1L2X	37.34	117.61	79.92	52.82	10.37						
	2-Wire ISDN Loop in Combination - Zone 4		4	UNCNX	U1L2X	59.18	117.61	79.92	52.82	10.37						
	2-wire ISDN COCI (BRITE) - in combination - per month			UNCNX	UC1CA	2.62	6.62	4.74								
4-WIRE DS1 DIGITAL LOOP FOR USE IN A COMBINATION																
	4-Wire DS1 Digital Loop in Combination - Zone 1		1	UNC1X	USLXX	79.08	253.93	158.45	46.10	12.07						
	4-Wire DS1 Digital Loop in Combination - Zone 2		2	UNC1X	USLXX	129.38	253.93	158.45	46.10	12.07						
	4-Wire DS1 Digital Loop in Combination - Zone 3		3	UNC1X	USLXX	206.74	253.93	158.45	46.10	12.07						

CATEGORY	RATE ELEMENTS	Interim	Zone	.	USOC	RATES ($)					Svc Order Submitted Elec per LSR	Svc Order Submitted Manually per LSR	Incremental Charge - Manual Svc Order vs. Electronic-1st	Incremental Charge - Manual Svc Order vs. Electronic-Add'l	Incremental Charge - Manual Svc Order vs. Electronic-Disc 1st	Incremental Charge - Manual Svc Order vs. Electronic-Disc Add'l
						Rec	Nonrecurring		Nonrecurring Disconnect		OSS Rates ($)					
							First	Add'l	First	Add'l	SOMEC	SOMAN	SOMAN	SOMAN	SOMAN	SOMAN
	4-Wire DS1 Digital Loop in Combination - Zone 4		4	UNC1X	USLXX	458.46	253.93	158.45	46.10	12.07						
	DS1 COCI in combination per month			UNC1X	UC1D1	2.62	6.62	4.74								
2 WIRE VOICE GRADE INTEROFFICE TRANSPORT FOR USE IN A COMBINATION																
	Interoffice Transport - 2-wire VG - Dedicated- Per Mile Per Month			UNCVX	1L5XX	0.00088										
	Interoffice Transport - 2-wire VG - Dedicated - Facility Termination per month			UNCVX	U1TV2	20.32	40.77	27.57	17.26	7.11						
4 WIRE VOICE GRADE INTEROFFICE TRANSPORT FOR USE IN A COMBINATION																
	Interoffice Transport - 4-wire VG - Dedicated - Per Mile Per Month			UNCVX	1L5XX	0.00088										
	Interoffice Transport - 4-wire VG - Dedicated - Facility Termination per month			UNCVX	U1TV4	17.86	40.77	27.57	17.26	7.11						
DS1 INTEROFFICE TRANSPORT FOR COMBINATION																
	Interoffice Transport - Dedicated - DS1 combination - Per Mile per month			UNC1X	1L5XX	0.1813										
	Interoffice Transport - Dedicated - DS1 combination - Facility Termination per month			UNC1X	U1TF1	51.72	89.79	82.28	16.86	14.90						
DS3 INTEROFFICE TRANSPORT FOR USE IN A COMBINATION																
	Interoffice Transport - Dedicated - DS3 combination - Per Mile Per Month			UNC3X	1L5XX	4.76										
	Interoffice Transport - Dedicated - DS3 - Facility Termination per month			UNC3X	U1TF3	641.90	280.37	163.70	62.08	60.29						
STS-1 INTEROFFICE TRANSPORT FOR USE IN COMBINATION																
	Interoffice Transport - Dedicated - STS-1 combination - Per Mile Per Month			UNCSX	1L5XX	4.76										
	Interoffice Transport - Dedicated - STS-1 combination - Facility Termination per month			UNCSX	U1TFS	644.21	280.37	163.70	62.08	60.29						
4-WIRE 56 KBPS DIGITAL LOOP WITH 56 KBPS INTEROFFICE TRANSPORT																
	4-wire 56 kbps Local Loop in combination - Zone 1		1	UNCDX	UDL56	27.44	126.53	88.85	60.68	14.64						
	4-wire 56 kbps Local Loop in combination - Zone 2		2	UNCDX	UDL56	34.55	126.53	88.85	60.68	14.64						
	4-wire 56 kbps Local Loop in combination - Zone 3		3	UNCDX	UDL56	40.76	126.53	88.85	60.68	14.64						
	4-wire 56 kbps Local Loop in combination - Zone 4		4	UNCDX	UDL56	32.25	126.53	88.85	60.68	14.64						
	Interoffice Transport - Dedicated - 4-wire 56 kbps combination - Per Mile per month			UNCDX	1L5XX	0.0098										
	Interoffice Transport - Dedicated - 4-wire 56 kbps combination - Facility Termination per month			UNCDX	U1TD5	22.52	40.78	27.57	17.26	7.11						
4-WIRE 64 KBPS DIGITAL EXTENDED LOOP WITH 64 KBPS INTEROFFICE TRANSPORT																
	4-wire 64 kbps Lcoal Loop in Combination - Zone 1		1	UNCDX	UDL64	27.44	126.53	88.85	60.68	14.64						
	4-wire 64 kbps Lcoal Loop in Combination - Zone 2		2	UNCDX	UDL64	34.55	126.53	88.85	60.68	14.64						
	4-wire 64 kbps Lcoal Loop in Combination - Zone 3		3	UNCDX	UDL64	40.76	126.53	88.85	60.68	14.64						
	4-wire 64 kbps Lcoal Loop in Combination - Zone 4		4	UNCDX	UDL64	32.25	126.53	88.85	60.68	14.64						
	Interoffice Transport - Dedicated - 4-wire 64 kbps combination - Per Mile per month			UNCDX	1L5XX	0.0098										
	Interoffice Transport - Dedicated - 4-wire 64 kbps combination - Facility Termination per month			UNCDX	U1TD6	22.52	40.78	27.57	17.26	7.11						
4-WIRE 56 KBPS DIGITAL EXTENDED LOOP WITH DS0 INTEROFFICE TRANSPORT																
	4-wire 56 kbps Local Loop in combination - Zone 1		1	UNCDX	UDL56	27.44	126.53	88.85	60.68	14.64						
	4-wire 56 kbps Local Loop in combination - Zone 2		2	UNCDX	UDL56	34.55	126.53	88.85	60.68	14.64						
	4-wire 56 kbps Local Loop in combination - Zone 3		3	UNCDX	UDL56	40.76	126.53	88.85	60.68	14.64						
	4-wire 56 kbps Local Loop in combination - Zone 4		4	UNCDX	UDL56	32.25	126.53	88.85	60.68	14.64						
	4-wiree 56 kbps Interoffice Transport - Dedicated - Per Mile per month			UNCDX	1L5XX	0.0098										
	4-wire 56 kbps Interoffice Transport - Dedicated - Facility Termination per month			UNCDX	U1TD5	22.52	40.78	27.57	17.26	7.11						
4-WIRE 64 KBPS DIGITAL EXTENDED LOOP WITH DS0 INTEROFFICE TRANSPORT																
	4-wire 64 kbps Local Loop in combination - Zone 1		1	UNCDX	UDL64	27.44	126.53	88.85	60.68	14.64						
	4-wire 64 kbps Local Loop in combination - Zone 2		2	UNCDX	UDL64	34.55	126.53	88.85	60.68	14.64						
	4-wire 64 kbps Local Loop in combination - Zone 3		3	UNCDX	UDL64	40.76	126.53	88.85	60.68	14.64						
	4-wire 64 kbps Local Loop in combination - Zone 4		4	UNCDX	UDL64	32.25	126.53	88.85	60.68	14.64						
	I4-wire 65 kbps Interoffice Transport - Dedicated - Per Mile per month			UNCDX	1L5XX	0.0098										
	4-wire 64 kbps Interoffice Transport - Dedicated - Facility Termination per month			UNCDX	U1TD6	22.52	40.78	27.57	17.26	7.11						
DS1 DIGITAL LOOP AND DS1 INTERFOFFICE TRANSPORT																

UNBUNDLED NETWORK ELEMENTS - Mississippi

Attachment: 2 Ex. A

CATEGORY	RATE ELEMENTS	Interim	Zone	.	USOC	RATES ($) Rec	Nonrecurring First	Nonrecurring Add'l	Nonrecurring Disconnect First	Nonrecurring Disconnect Add'l	Svc Order Submitted Elec per LSR	Svc Order Submitted Manually per LSR	Incremental Charge - Manual Svc Order vs. Electronic-1st	Incremental Charge - Manual Svc Order vs. Electronic-Add'l	Incremental Charge - Manual Svc Order vs. Electronic-Disc 1st	Incremental Charge - Manual Svc Order vs. Electronic-Disc Add'l
											OSS Rates ($)					
							First	Add'l	First	Add'l	SOMEC	SOMAN	SOMAN	SOMAN	SOMAN	SOMAN
	4-Wire DS1 Digital Loop in Combination - Zone 1		1	UNC1X	USLXX	79.08	253.93	158.45	46.10	12.07						
	4-Wire DS1 Digital Loop in Combination - Zone 2		2	UNC1X	USLXX	129.38	253.93	158.45	46.10	12.07						
	4-Wire DS1 Digital Loop in Combination - Zone 3		3	UNC1X	USLXX	206.74	253.93	158.45	46.10	12.07						
	4-wire DS1 Digital Lcoal Loop in Combination - Zone 4		4	UNC1X	USLXX	458.46	253.93	158.45	46.10	12.07						
	Interoffice Transport - Dedicated - DS1 combination - Per Mile per month			UNC1X	1L5XX	0.1813										
	Interoffice Transport - Dedicated - DS1 combination - Facility Termination per month			UNC1X	U1TF1	51.72	89.79	82.28	16.86	14.90						
DS3 DIGITAL LOOP WITH DEDICATED DS3 INTEROFFICE TRANSPORT																
	DS3 Local Loop in combination - per mile per month			UNC3X	1L5ND	12.88										
	DS3 Local Loop in combination - Facility Termination per month			UNC3X	UE3PX	375.0725	522.2495	305.2905	141.7145	99.1185						
	Interoffice Transport - Dedicated - DS3 - Per Mile per month			UNC3X	1L5XX	4.76										
	Interoffice Transport - Dedicated - DS3 combination - Facility Termination per month			UNC3X	U1TF3	641.90	280.37	163.70	62.08	60.29						
STS-1 DIGITAL LOOP WITH DEDICATED STS-1 INTEROFFICE TRANSPORT																
	STS-1 Local Lolp in combination - per mile per month			UNCSX	1L5ND	12.88										
	STS-1 Local Loop in combination - Facility Termination per month			UNCSX	UDLS1	389.3325	522.2495	305.2905	141.7145	99.1185						
	Interoffice Transport - Dedicated - STS-1 combination - per mile per month			UNCSX	1L5XX	4.76										
	Interoffice Transport - Dedicated - STS-1 combination - Facility Termination per month			UNCSX	U1TFS	644.21	280.37	163.70	62.08	60.29						
ADDITIONAL NETWORK ELEMENTS																
When used as a part of a currently combined facility, the non-recurrng charges do not apply, but a Switch As Is charge does apply.																
When used as ordinarily combined network elements in All States, the non-recurring charges apply and the Switch As Is Charge does not.																
	Commingling Authorization			UNCVX, UNCDX, UNC1X, UNC3X, UNCSX, U1TD1, U1TD3, U1TS1, UE3, UDLSX, U1TVX, U1TDX, U1TUB	CMGAU	0.00	0.00	0.00	0.00	0.00						
Nonrecurring Currently Combined Network Elements "Switch As Is" Charge (One applies to each combination)																
	Nonrecurring Currently Combined Network Elements Switch -As-Is Charge			UNCVX, UNCDX, UNC1X, UNC3X, UNCSX	UNCCC		5.63	5.63	7.20	7.20						
Optional Features & Functions:																
	Clear Channel Capability Extended Frame Option - per DS1	I		U1TD1, ULDD1,UNC1X	CCOEF		0.00	0.00	0.00	0.00						
	Clear Channel Capability Super FrameOption - per DS1	I		U1TD1, ULDD1,UNC1X	CCOSF		0.00	0.00	0.00	0.00						
	Clear Channel Capability (SF/ESF) Option - Subsequent Activity - per DS1	I		ULDD1, U1TD1, UNC1X, USL	NRCCC		184.60	23.78	1.96	0.76						
	C-bit Parity Option - Subsequent Activity - per DS3	i		U1TD3, ULDD3, UE3, UNC3X	NRCC3		218.72	7.66	0.7201	0.00						
MULTIPLEXERS																
	DS1 to DS0 Channel System per month			UNC1X	MQ1	102.85	91.57	62.94	10.87	10.10						
	OCU-DP COCI (data) - DS1 to DS0 Channel System - per month (2.4-64kbs) used for a Local Loop			UDL	1D1DD	1.22	6.62	4.74								
	OCU-DP COCI (data) - DS1 to DS0 Channel System - per month (2.4-64kbs) used for connection to a channelized DS1 Local Channel in the same SWC as collocation			U1TUD	1D1DD	1.22	6.62	4.74								
	2-wire ISDN COCI (BRITE) - DS1 to DS0 Channel Systsem - per month for a Local Loop			UDN	UC1CA	2.62	6.62	4.74								
	2-wire ISDN COCI (BRITE) - DS1 to DS0 Channel Systsem - per month used for connection to a channelized DS1 Local Channel in the same SWC as collocation			U1TUB	UC1CA	2.62	6.62	4.74								
	Voice Grade COCI - DS1 to DS0 Channel System - per month used for a Local Loop			UEA	1D1VG	0.5737	6.62	4.74								
	Voice Grade COCI - DS1 to DS0 Channel System - per month used for connection to a channelized DS1 Local Channel in the same SWC as collocation			U1TUC	1D1VG	0.5737	6.62	4.74								
	DS3 to DS1 Channel System per month			UNC3X	MQ3	170.63	179.17	94.52	34.30	32.82						

UNBUNDLED NETWORK ELEMENTS - Mississippi

Attachment: 2 Ex. A

CATEGORY	RATE ELEMENTS	Interim	Zone	.	USOC	RATES ($)					Svc Order Submitted Elec per LSR	Svc Order Submitted Manually per LSR	Incremental Charge - Manual Svc Order vs. Electronic-1st	Incremental Charge - Manual Svc Order vs. Electronic-Add'l	Incremental Charge - Manual Svc Order vs. Electronic-Disc 1st	Incremental Charge - Manual Svc Order vs. Electronic-Disc Add'l
						Rec	Nonrecurring		Nonrecurring Disconnect		OSS Rates ($)					
							First	Add'l	First	Add'l	SOMEC	SOMAN	SOMAN	SOMAN	SOMAN	SOMAN
	STS-1 to DS1 Channel System per month			UNCSX	MQ3	170.63	179.17	94.52	34.30	32.82						
	DS1 COCI used with Loop per month			USL	UC1D1	12.96	6.62	4.74								
	DS1 COCI (used for connection to a channelized DS1 Local Channel in the same SWC as collocation) per month			U1TUA	UC1D1	12.96	6.62	4.74								
	DS1 COCI used with Interoffice Channel per month			U1TD1	UC1D1	12.96	6.62	4.74								
	DS3 Interface Unit (DS1 COCI) used with Local Channel per month			ULDD1	UC1D1	12.96	6.62	4.74								
UNBUNDLED LOCAL EXCHANGE SWITCHING(PORTS)																
	The Exchange Switching Port Rates Reflected Here Apply to Embedded Base Switching Ports as of March 10, 2005 and Consist of the TELRIC Cost Based Rates Plus $1.00 in Accordance with the TRRO.															
	Exchange Ports															
	NOTE: Although the Port Rate includes all available features in GA, KY, LA & TN, the desired features will need to be ordered using retail USOCs															
	2-WIRE VOICE GRADE LINE PORT RATES (RES)															
	Exchange Ports - 2-Wire Analog Line Port- Res.			UEPSR	UEPRL	2.41	2.39	2.29	1.42	1.33						
	Exchange Ports - 2-Wire Analog Line Port with Caller ID - Res.			UEPSR	UEPRC	2.41	2.39	2.29	1.42	1.33						
	Exchange Ports - 2-Wire Analog Line Port outgoing only - Res.			UEPSR	UEPRO	2.41	2.39	2.29	1.42	1.33						
	Exchange Ports - 2-Wire VG unbundled MS extended local dialing parity Port with Caller ID - Res.			UEPSR	UEPAT	2.41	2.39	2.29	1.42	1.33						
	Exchange Ports - 2-Wire VG unbundled res, low usage line port with Caller ID (LUM)			UEPSR	UEPAP	2.41	2.39	2.29	1.42	1.33						
	Exchange Ports - 2-Wire Voice Mississippi Residence Dialing Plan without Caller ID			UEPSR	UEPWJ	2.41	2.39	2.29	1.42	1.33						
	2-Wire voice unbundled Low Usage Line Port without Caller ID Capability			UEPSR	UEPRT	2.41	2.39	2.29	1.42	1.33						
	Subsequent Activity			UEPSR	USASC	0.00	0.00	0.00								
	FEATURES															
	All Available Vertical Features			UEPSR	UEPVF	2.56	0.00	0.00								
	2-WIRE VOICE GRADE LINE PORT RATES (BUS)															
	Exchange Ports - 2-Wire Analog Line Port without Caller ID - Bus			UEPSB	UEPBL	2.41	2.39	2.29	1.42	1.33						
	Exchange Ports - 2-Wire VG unbundled Line Port with unbundled port with Caller+E484 ID - Bus.			UEPSB	UEPBC	2.41	2.39	2.29	1.42	1.33						
	Exchange Ports - 2-Wire Analog Line Port outgoing only - Bus.			UEPSB	UEPBO	2.41	2.39	2.29	1.42	1.33						
	Exchange Ports - 2-Wire VG unbundled MS extended local dialing parity Port with Caller ID - Bus.			UEPSB	UEPAY	2.41	2.39	2.29	1.42	1.33						
	Exhange Ports - 2-Wire VG unbundled incoming only port with Caller ID - Bus			UEPSB	UEPB1	2.41	2.39	2.29	1.42	1.33						
	Exchange Ports - 2-Wire Voice Mississippi Business Dialing Plan without Caller ID			UEPSB	UEPWK	2.41	2.39	2.29	1.42	1.33						
	2-Wire voice unbundled Incoming Only Port without Caller ID Capability			UEPSB	UEPBE	2.41	2.39	2.29	1.42	1.33						
	Subsequent Activity			UEPSB	USASC	0.00	0.00	0.00								
	FEATURES															
	All Available Vertical Features			UEPSB	UEPVF	2.56	0.00	0.00								
	EXCHANGE PORT RATES (DID & PBX)															
	2-Wire VG Unbundled 2-Way PBX Trunk - Res			UEPSE	UEPRD	2.41	31.45	14.93	14.38	0.92						
	2-Wire VG Line Side Unbundled 2-Way PBX Trunk - Bus			UEPSP	UEPPC	2.41	31.45	14.93	14.38	0.92						
	2-Wire VG Line Side Unbundled Outward PBX Trunk - Bus			UEPSP	UEPPO	2.41	31.45	14.93	14.38	0.92						
	2-Wire VG Line Side Unbundled Incoming PBX Trunk - Bus			UEPSP	UEPP1	2.41	31.45	14.93	14.38	0.92						
	2-Wire Analog Long Distance Terminal PBX Trunk - Bus			UEPSP	UEPLD	2.41	31.45	14.93	14.38	0.92						
	2-Wire Voice Unbundled PBX LD Terminal Ports			UEPSP	UEPLD	2.41	31.45	14.93	14.38	0.92						
	2-Wire Vice Unbundled 2-Way PBX Usage Port			UEPSP	UEPXA	2.41	31.45	14.93	14.38	0.92						
	2-Wire Voice Unbundled PBX Toll Terminal Hotel Ports			UEPSP	UEPXB	2.41	31.45	14.93	14.38	0.92						
	2-Wire Voice Unbundled PBX LD DDD Terminals Port			UEPSP	UEPXC	2.41	31.45	14.93	14.38	0.92						
	2-Wire Voice Unbundled PBX LD Terminal Switchboard Port			UEPSP	UEPXD	2.41	31.45	14.93	14.38	0.92						
	2-Wire Voice Unbundled PBX LD Terminal Switchboard IDD Capable Port			UEPSP	UEPXE	2.41	31.45	14.93	14.38	0.92						
	2-Wire Voice Unbundled 2-Way PBX Hotel/Hospital Economy Administrative Calling Port			UEPSP	UEPXL	2.41	31.45	14.93	14.38	0.92						
	2-Wire Voice Unbundled 2-Way PBX Hotel/Hospital Economy Room Calling Port			UEPSP	UEPXM	2.41	31.45	14.93	14.38	0.92						

UNBUNDLED NETWORK ELEMENTS - Mississippi														Attachment: 2 Ex. A				
CATEGORY	RATE ELEMENTS	Interim	Zone	.	USOC	RATES ($)					Svc Order Submitted Elec per LSR	Svc Order Submitted Manually per LSR	Incremental Charge - Manual Svc Order vs. Electronic-1st	Incremental Charge - Manual Svc Order vs. Electronic-Add'l	Incremental Charge - Manual Svc Order vs. Electronic-Disc 1st	Incremental Charge - Manual Svc Order vs. Electronic-Disc Add'l	
						Rec	Nonrecurring		Nonrecurring Disconnect		OSS Rates ($)						
							First	Add'l	First	Add'l	SOMEC	SOMAN	SOMAN	SOMAN	SOMAN	SOMAN	
	2-Wire Voice Unbundled 1-Way Outgoing PBX Hotel/Hospital Discount Room Calling Port			UEPSP	UEPXO	2.41	31.45	14.93	14.38	0.92							
	2-Wire Voice Unbundled 2-Way PBX Mississippi Local Economy Calling Port			UEPSP	UEPXQ	2.41	31.45	14.93	14.38	0.92							
	2-Wire Voice Unbundled 2-Way PBX Mississippi Local Optional Calling Port			UEPSP	UEPXR	2.41	31.45	14.93	14.38	0.92							
	2-Wire Voice Unbundled PBX Port, Mississippi only			UEPSP	UEPA5	2.41	31.45	14.93	14.38	0.92							
	2-Wire Voice Unbundled 1-Way Outgoing PBX Measured Port			UEPSP	UEPXS	2.41	31.45	14.93	14.38	0.92							
	Subsequent Activity			UEPSP	USASC	0.00	0.00	0.00									
FEATURES																	
	All Available Vertical Features			UEPSP UEPSE	UEPVF	2.56	0.00	0.00									
NOTE: Transmission/usage charges associated with POTS circuit switched usage will also apply to circuit switched voice and/or circuit switched data transmission by B-Channels associated with 2-wire ISDN ports.																	
NOTE: Access to B Channel or D Channel Packet capabilities will be available only through BFR/New Business Request Process. Rates for the packet capabilities will be determined via the Bona Fide Request/New Business Request Process.																	
2-WIRE VOICE GRADE LINE PORT RATES (DID)																	
	Exchange Ports - 2-Wire DID Port			UEPEX	UEPP2	8.25	120.00	18.85	61.77	3.88							
2-WIRE VOICE GRADE LINE PORT RATES (ISDN-BRI)																	
	Exchange Ports - 2-Wire ISDN Port (See Notes below.)			UEPTX, UEPSX	U1PMA	13.69	73.19	53.30	47.90	10.76							
	All Features Offered			UEPTX, UEPSX	UEPVF	2.56	0.00	0.00									
	Exchange Ports - 2-Wire ISDN Port -- Channel Profiles			UEPTX, UEPSX	U1UMA	0.00	0.00	0.00									
NOTE: Transmission/usage charges associated with POTS circuit switched usage will also apply to circuit switched voice and/or circuit switched data transmission by B-Channels associated with 2-wire ISDN ports.																	
NOTE: Access to B Channel or D Channel Packet capabilities will be available only through BFR/New Business Request Process. Rates for the packet capabilities will be determined via the Bona Fide Request/New Business Request Process.																	
UNBUNDLED PORT with REMOTE CALL FORWARDING CAPABILITY																	
UNBUNDLED REMOTE CALL FORWARDING SERVICE - RESIDENCE																	
	Unbundled Remote Call Forwarding Service, Area Calling, Res			UEPVR	UERAC	2.41	2.39	2.29	1.42	1.33							
	Unbundled Remote Call Forwarding Service, Local Calling - Res			UEPVR	UERLC	2.41	2.39	2.29	1.42	1.33							
	Unbundled Remote Call Forwarding Service, InterLATA - Res			UEPVR	UERTE	2.41	2.39	2.29	1.42	1.33							
	Unbundled Remote Call Forwarding Service, IntraLATA - Res			UEPVR	UERTR	2.41	2.39	2.29	1.42	1.33							
Non-Recurring																	
	Unbundled Remote Call Forwarding Service - Conversion - Switch-as-is			UEPVR	USAC2		0.0988	0.0988									
	Unbundled Remote Call Forwarding Service - Conversion with allowed change (PIC and LPIC)			UEPVR	USACC		0.0988	0.0988									
UNBUNDLED REMOTE CALL FORWARDING - Bus																	
	Unbundled Remote Call Forwarding Service, Area Calling - Bus			UEPVB	UERAC	2.41	2.39	2.29	1.42	1.33							
	Unbundled Remote Call Forwarding Service, Local Calling - Bus			UEPVB	UERLC	2.41	2.39	2.29	1.42	1.33							
	Unbundled Remote Call Forwarding Service, InterLATA - Bus			UEPVB	UERTE	2.41	2.39	2.29	1.42	1.33							
	Unbundled Remote Call Forwarding Service, IntraLATA - Bus			UEPVB	UERTR	2.41	2.39	2.29	1.42	1.33							
	Unbundled Remote Call Forwarding Service Expanded and Exception Local Calling			UEPVB	UERVJ	2.41	2.39	2.29	1.42	1.33							
Non-Recurring																	
	Unbundled Remote Call Forwarding Service - Conversion - Switch-as-is			UEPVB	USAC2		0.0988	0.0988									
	Unbundled Remote Call Forwarding Service - Conversion with allowed change (PIC and LPIC)			UEPVB	USACC		0.0988	0.0988									
UNBUNDLED LOCAL SWITCHING, PORT USAGE																	
End Office Switching (Port Usage)																	
	End Office Switching Function, Per MOU					0.0010269											
	End Office Trunk Port - Shared, Per MOU					0.000161											
Tandem Switching (Port Usage) (Local or Access Tandem)																	
	Tandem Switching Function Per MOU					0.0001723											
	Tandem Trunk Port - Shared, Per MOU					0.0001828											
	Tandem Switching Function Per MOU (Melded)					0.000063441											
	Tandem Trunk Port - Shared, Per MOU (Melded)					0.000067307											
Melded Factor: 36.82% of the Tandem Rate																	
Common Transport																	
	Common Transport - Per Mile, Per MOU					0.0000026											
	Common Transport - Facilities Termination Per MOU					0.0004541											
UNBUNDLED PORT/LOOP COMBINATIONS - COST BASED RATES																	
>Cost Based Rates are applied where BellSouth is required by FCC and/or State Commission rule to provide Unbundled Local Switching or Switch Ports.																	
> The UNE-P Switching Port Rates Reflected in the Cost Based Section Apply to Embedded Base UNE-Ps as of March 10, 2005 and Consist of the TELRIC Cost Based Rates Plus $1.00 in Accordance with the TRRO.																	

UNBUNDLED NETWORK ELEMENTS - Mississippi

Attachment: 2 Ex. A

CATEGORY	RATE ELEMENTS	Interim	Zone	.	USOC	RATES ($) Rec	Nonrecurring First	Nonrecurring Add'l	Nonrecurring Disconnect First	Nonrecurring Disconnect Add'l	Svc Order Submitted Elec per LSR	Svc Order Submitted Manually per LSR	Incremental Charge - Manual Svc Order vs. Electronic-1st	Incremental Charge - Manual Svc Order vs. Electronic-Add'l	Incremental Charge - Manual Svc Order vs. Electronic-Disc 1st	Incremental Charge - Manual Svc Order vs. Electronic-Disc Add'l
											OSS Rates ($)					
											SOMEC	SOMAN	SOMAN	SOMAN	SOMAN	SOMAN
	>Features shall apply to the Unbundled Port/Loop Combination - Cost Based Rate section in the same manner as they are applied to the Stand-Alone Unbundled Port section of this Rate Exhibit.															
	>End Office and Tandem Switching Usage and Common Transport Usage rates in the Port section of this rate exhibit shall apply to all combinations of loop/port network elements except for UNE Coin Port/Loop Combinations.															
	>The first and additional Port nonrecurring charges apply to Not Currently Combined Combos. For Currently Combined Combos the nonrecurring charges shall be those identified in the Nonrecurring - Currently Combined sections.															
	2-WIRE VOICE GRADE LOOP WITH 2-WIRE LINE PORT (RES)															
	UNE Port/Loop Combination Rates															
	2-Wire VG Loop/Port Combo - Zone 1					13.22										
	2-Wire VG Loop/Port Combo - Zone 2					18.13										
	2-Wire VG Loop/Port Combo - Zone 3					27.26										
	2-Wire VG Loop/Port Combo - Zone 4					45.91										
	UNE Loop Rates															
	2-Wire Voice Grade Loop (SL1) - Zone 1		1	UEPRX	UEPLX	10.98										
	2-Wire Voice Grade Loop (SL1) - Zone 2		2	UEPRX	UEPLX	15.91										
	2-Wire Voice Grade Loop (SL1) - Zone 3		3	UEPRX	UEPLX	25.04										
	2-Wire Voice Grade Loop (SL1) - Zone 4		4	UEPRX	UEPLX	43.68										
	2-Wire Voice Grade Line Port Rates (Res)															
	2-Wire voice unbundled port - residence			UEPRX	UEPRL	2.23	40.31	19.84	24.90	6.58						
	2-Wire voice unbundled port with Caller ID - res			UEPRX	UEPRC	2.23	40.31	19.84	24.90	6.58						
	2-Wire voice unbundled port outgoing only - res			UEPRX	UEPRO	2.23	40.31	19.84	24.90	6.58						
	2-Wire voice Grade unbundled Mississippi extended local dialing parity port with Caller ID - res			UEPRX	UEPAT	2.23	40.31	19.84	24.90	6.58						
	2-Wire voice unbundles res, low usage line port with Caller ID (LUM)			UEPRX	UEPAP	2.23	40.31	19.84	24.90	6.58						
	2-Wire Voice Unbundled Mississippi Residence Dialing Plan without Caller ID			UEPRX	UEPWJ	2.23	40.31	19.84	24.90	6.58						
	2-Wire voice unbundled Low Usage Line Port without Caller ID Capability			UEPRX	UEPRT	2.23	40.31	19.84	24.90	6.58						
	FEATURES															
	All Features Offered			UEPRX	UEPVF	2.56	0.00	0.00								
	NONRECURRING CHARGES (NRCs) - CURRENTLY COMBINED															
	2-Wire Voice Grade Loop / Line Port Combination - Conversion - Switch-as-is			UEPRX	USAC2		0.0988	0.0988								
	2-Wire Voice Grade Loop / Line Port Combination - Conversion - Switch with change			UEPRX	USACC		0.0988	0.0988								
	2-Wire Voice Grade Loop / Line Port Combination - Conversion - Subsequent Database Update						0.00	0.00								
	2-Wire Voice Grade Loop / Line Port Platform - Installation Charge at QuickService location - Not Conversion of Existing Service			UEPRX	URECC		0.0988									
	ADDITIONAL NRCs															
	2-Wire Voice Grade Loop/Line Port Combination - Subsequent Activity			UEPRX	USAS2	0.00	0.00	0.00								
	Unbundled Miscellaneous Rate Element, Tag Loop at End User Premise			UEPRX	URETL		8.33	0.83								
	OFF/ON PREMISES EXTENSION CHANNELS															
	2 Wire Analog Voice Grade Extension Loop – Non-Design		1	UEPRX	UEAEN	12.03	37.92	17.55	23.48	5.25						
	2 Wire Analog Voice Grade Extension Loop – Non-Design		2	UEPRX	UEAEN	16.87	37.92	17.55	23.48	5.25						
	2 Wire Analog Voice Grade Extension Loop – Non-Design		3	UEPRX	UEAEN	25.68	37.92	17.55	23.48	5.25						
	2 Wire Analog Voice Grade Extension Loop – Non-Design		4	UEPRX	UEAEN	43.85	37.92	17.55	23.48	5.25						
	2 Wire Analog Voice Grade Extension Loop – Design		1	UEPRX	UEAED	13.89	105.96	68.28	52.82	10.37						
	2 Wire Analog Voice Grade Extension Loop – Design		2	UEPRX	UEAED	18.75	105.96	68.28	52.82	10.37						
	2 Wire Analog Voice Grade Extension Loop – Design		3	UEPRX	UEAED	27.55	105.96	68.28	52.82	10.37						
	2 Wire Analog Voice Grade Extension Loop – Design		4	UEPRX	UEAED	45.72	105.96	68.28	52.82	10.37						
	INTEROFFICE TRANSPORT															
	Interoffice Transport - Dedicated - 2 Wire Voice Grade - Facility Termination			UEPRX	U1TV2	20.32	40.77	27.57	17.26	7.11						
	Interoffice Transport - Dedicated - 2 Wire Voice Grade - Per Mile or Fraction Mile			UEPRX	U1TVM	0.0088	0.00	0.00								
	2-WIRE VOICE GRADE LOOP WITH 2-WIRE LINE PORT (BUS)															
	UNE Port/Loop Combination Rates															
	2-Wire VG Loop/Port Combo - Zone 1					13.22										

UNBUNDLED NETWORK ELEMENTS - Mississippi

Attachment: 2 Ex. A

CATEGORY	RATE ELEMENTS	Interim	Zone	.	USOC	RATES ($)					Svc Order Submitted Elec per LSR	Svc Order Submitted Manually per LSR	Incremental Charge - Manual Svc Order vs. Electronic-1st	Incremental Charge - Manual Svc Order vs. Electronic-Add'l	Incremental Charge - Manual Svc Order vs. Electronic-Disc 1st	Incremental Charge - Manual Svc Order vs. Electronic-Disc Add'l
						Rec	Nonrecurring		Nonrecurring Disconnect		OSS Rates ($)					
							First	Add'l	First	Add'l	SOMEC	SOMAN	SOMAN	SOMAN	SOMAN	SOMAN
	2-Wire VG Loop/Port Combo - Zone 2					18.13										
	2-Wire VG Loop/Port Combo - Zone 3					27.26										
	2-Wire VG Loop/Port Combo - Zone 4					45.91										
UNE Loop Rates																
	2-Wire Voice Grade Loop (SL1) - Zone 1		1	UEPBX	UEPLX	10.98										
	2-Wire Voice Grade Loop (SL1) - Zone 2		2	UEPBX	UEPLX	15.91										
	2-Wire Voice Grade Loop (SL1) - Zone 3		3	UEPBX	UEPLX	25.04										
	2-Wire Voice Grade Loop (SL1) - Zone 4		4	UEPBX	UEPLX	43.68										
2-Wire Voice Grade Line Port (Bus)																
	2-Wire voice unbundled port without Caller ID - bus			UEPBX	UEPBL	2.23	40.31	19.84	24.90	6.58						
	2-Wire voice unbundled port with Caller + E484 ID - bus			UEPBX	UEPBC	2.23	40.31	19.84	24.90	6.58						
	2-Wire voice unbundled port outgoing only - bus			UEPBX	UEPBO	2.23	40.31	19.84	24.90	6.58						
	2-Wire voice Grade unbundled Mississippi extended local dialing parity port with Caller ID - bus			UEPBX	UEPAY	2.23	40.31	19.84	24.90	6.58						
	2-Wire voice unbundled incoming only port with Caller ID - Bus			UEPBX	UEPB1	2.23	40.31	19.84	24.90	6.58						
	2-Wire Voice Unbundled Mississippi Business Dialing Plan without Caller ID			UEPBX	UEPWK	2.23	40.31	19.84	24.90	6.58						
	2-Wire voice unbundled Incoming Only Port without Caller ID Capability			UEPBX	UEPBE	2.23	40.31	19.84	24.90	6.58						
FEATURES																
	All Features Offered			UEPBX	UEPVF	2.56	0.00	0.00								
NONRECURRING CHARGES (NRCs) - CURRENTLY COMBINED																
	2-Wire Voice Grade Loop / Line Port Combination - Conversion - Switch-as-is			UEPBX	USAC2		0.0988	0.0988								
	2-Wire Voice Grade Loop / Line Port Combination - Conversion - Switch with change			UEPBX	USACC		0.0988	0.0988								
	2-Wire Voice Grade Loop / Line Port Combination - Conversion - Subsequent Database Update						0.00	0.00								
ADDITIONAL NRCs																
	2-Wire Voice Grade Loop/Line Port Combination - Subsequent Activity			UEPBX	USAS2		0.00	0.00								
	Unbundled Miscellaneous Rate Element, Tag Loop at End User Premise			UEPBX	URETL		8.33	0.83								
OFF/ON PREMISES EXTENSION CHANNELS																
	2 Wire Analog Voice Grade Extension Loop – Non-Design		1	UEPBX	UEAEN	12.03	37.92	17.55	23.48	5.25						
	2 Wire Analog Voice Grade Extension Loop – Non-Design		2	UEPBX	UEAEN	16.87	37.92	17.55	23.48	5.25						
	2 Wire Analog Voice Grade Extension Loop – Non-Design		3	UEPBX	UEAEN	25.68	37.92	17.55	23.48	5.25						
	2 Wire Analog Voice Grade Extension Loop – Non-Design		4	UEPBX	UEAEN	43.85	37.92	17.55	23.48	5.25						
	2 Wire Analog Voice Grade Extension Loop – Design		1	UEPBX	UEAED	13.89	105.96	68.28	52.82	10.37						
	2 Wire Analog Voice Grade Extension Loop – Design		2	UEPBX	UEAED	18.75	105.96	68.28	52.82	10.37						
	2 Wire Analog Voice Grade Extension Loop – Design		3	UEPBX	UEAED	27.55	105.96	68.28	52.82	10.37						
	2 Wire Analog Voice Grade Extension Loop – Design		4	UEPBX	UEAED	45.72	105.96	68.28	52.82	10.37						
INTEROFFICE TRANSPORT																
	Interoffice Transport - Dedicated - 2 Wire Voice Grade - Facility Termination			UEPBX	U1TV2	20.32	40.77	27.57	17.26	7.11						
	Interoffice Transport - Dedicated - 2 Wire Voice Grade - Per Mile or Fraction Mile			UEPBX	U1TVM	0.0088	0.00	0.00								
2-WIRE VOICE GRADE LOOP WITH 2-WIRE LINE PORT (RES - PBX)																
UNE Port/Loop Combination Rates																
	2-Wire VG Loop/Port Combo - Zone 1					13.22										
	2-Wire VG Loop/Port Combo - Zone 2					18.13										
	2-Wire VG Loop/Port Combo - Zone 3					27.26										
	2-Wire VG Loop/Port Combo - Zone 4					45.91										
UNE Loop Rates																
	2-Wire Voice Grade Loop (SL 1) - Zone 1		1	UEPRG	UEPLX	10.98										
	2-Wire Voice Grade Loop (SL 1) - Zone 2		2	UEPRG	UEPLX	15.91										
	2-Wire Voice Grade Loop (SL 1) - Zone 3		3	UEPRG	UEPLX	25.04										
	2-Wire Voice Grade Loop (SL 1) - Zone 4		4	UEPRG	UEPLX	43.68										
2-Wire Voice Grade Line Port Rates (RES - PBX)																
	2-Wire VG Unbundled Combination 2-Way PBX Trunk Port - Res			UEPRG	UEPRD	2.23	69.37	32.48	37.86	6.17						
FEATURES																
	All Features Offered			UEPRG	UEPVF	2.56	0.00	0.00								
NONRECURRING CHARGES (NRCs) - CURRENTLY COMBINED																

CATEGORY	RATE ELEMENTS	Interim	Zone	.	USOC	RATES ($)					Svc Order Submitted Elec per LSR	Svc Order Submitted Manually per LSR	Incremental Charge - Manual Svc Order vs. Electronic-1st	Incremental Charge - Manual Svc Order vs. Electronic-Add'l	Incremental Charge - Manual Svc Order vs. Electronic-Disc 1st	Incremental Charge - Manual Svc Order vs. Electronic-Disc Add'l
						Rec	Nonrecurring		Nonrecurring Disconnect		OSS Rates ($)					
							First	Add'l	First	Add'l	SOMEC	SOMAN	SOMAN	SOMAN	SOMAN	SOMAN
	2-Wire Voice Grade Loop/ Line Port Combination (PBX) - Conversion - Switch-As-Is			UEPRG	USAC2		7.96	1.91								
	2-Wire Voice Grade Loop/ Line Port Combination (PBX) - Conversion - Switch with Change			UEPRG	USACC		7.96	1.91								
	2-Wire Voice Grade Loop / Line Port Combination - Conversion - Subsequent Database Update						0.00	0.00								
ADDITIONAL NRCs																
	2-Wire Voice Grade Loop/ Line Port Combination (PBX) - Subsequent Activity			UEPRG	USAS2	0.00	0.00	0.00								
	PBX Subsequent Activity - Change/Rearrange Multiline Hunt Group						7.36	7.36								
	Unbundled Miscellaneous Rate Element, Tag Loop at End User Premise			UEPRG	URETL		8.33	0.83								
OFF/ON PREMISES EXTENSION CHANNELS																
	Local Channel Voice grade, per termination		1	UEPRG	P2JHX	13.89	105.96	68.28	52.82	10.37						
	Local Channel Voice grade, per termination		2	UEPRG	P2JHX	18.75	105.96	68.28	52.82	10.37						
	Local Channel Voice grade, per termination		3	UEPRG	P2JHX	27.55	105.96	68.28	52.82	10.37						
	Local Channel Voice grade, per termination		4	UEPRG	P2JHX	45.72	105.96	68.28	52.82	10.37						
INTEROFFICE TRANSPORT																
	Interoffice Transport - Dedicated - 2 Wire Voice Grade - Facility Termination			UEPRG	U1TV2	20.32	40.77	27.57	17.26	7.11						
	Interoffice Transport - Dedicated - 2 Wire Voice Grade - Per Mile or Fraction Mile			UEPRG	U1TVM	0.0088	0.00	0.00								
2-WIRE VOICE GRADE LOOP WITH 2-WIRE LINE PORT (BUS - PBX)																
UNE Port/Loop Combination Rates																
	2-Wire VG Loop/Port Combo - Zone 1					13.22										
	2-Wire VG Loop/Port Combo - Zone 2					18.13										
	2-Wire VG Loop/Port Combo - Zone 3					27.26										
	2-Wire VG Loop/Port Combo - Zone 4					45.91										
UNE Loop Rates																
	2-Wire Voice Grade Loop (SL 1) - Zone 1		1	UEPPX	UEPLX	10.98										
	2-Wire Voice Grade Loop (SL 1) - Zone 2		2	UEPPX	UEPLX	15.91										
	2-Wire Voice Grade Loop (SL 1) - Zone 3		3	UEPPX	UEPLX	25.04										
	2-Wire Voice Grade Loop (SL 1) - Zone 4		4	UEPPX	UEPLX	43.68										
2-Wire Voice Grade Line Port Rates (BUS - PBX)																
	Line Side Unbundled Combination 2-Way PBX Trunk Port - Bus			UEPPX	UEPPC	2.23	69.37	32.48	37.86	6.17						
	Line Side Unbundled Outward PBX Trunk Port - Bus			UEPPX	UEPPO	2.23	69.37	32.48	37.86	6.17						
	Line Side Unbundled Incoming PBX Trunk Port - Bus			UEPPX	UEPP1	2.23	69.37	32.48	37.86	6.17						
	2-Wire Voice Unbundled PBX LD Terminal Ports			UEPPX	UEPLD	2.23	69.37	32.48	37.86	6.17						
	2-Wire Voice Unbundled 2-Way Combination PBX Usage Port			UEPPX	UEPXA	2.23	69.37	32.48	37.86	6.17						
	2-Wire Voice Unbundled PBX Toll Terminal Hotel Ports			UEPPX	UEPXB	2.23	69.37	32.48	37.86	6.17						
	2-Wire Voice Unbundled PBX LD DDD Terminals Port			UEPPX	UEPXC	2.23	69.37	32.48	37.86	6.17						
	2-Wire Voice Unbundled PBX LD Terminal Switchboard Port			UEPPX	UEPXD	2.23	69.37	32.48	37.86	6.17						
	2-Wire Voice Unbundled PBX LD Terminal Switchboard IDD Capable Port			UEPPX	UEPXE	2.23	69.37	32.48	37.86	6.17						
	2-Wire Voice Unbundled 2-Way PBX Hotel/Hospital Economy Administrative Calling Port			UEPPX	UEPXL	2.23	69.37	32.48	37.86	6.17						
	2-Wire Voice Unbundled 2-Way PBX Hotel/Hospital Economy Room Calling Port			UEPPX	UEPXM	2.23	69.37	32.48	37.86	6.17						
	2-Wire Voice Unbundled 1-Way Outgoing PBX Hotel/Hospital Discount Room Calling Port			UEPPX	UEPXO	2.23	69.37	32.48	37.86	6.17						
	2-Wire Voice Unbundled 2-Way PBX Mississippi Local Economy Calling Port			UEPPX	UEPXQ	2.23	69.37	32.48	37.86	6.17						
	2-Wire Voice Unbundled 2-Way PBX Mississippi Local Optional Calling Port			UEPPX	UEPXR	2.23	69.37	32.48	37.86	6.17						
	2-Wire Voice Unbundled 1-Way Outgoing PBX Measured Port			UEPPX	UEPXS	2.23	69.37	32.48	37.86	6.17						
	Mississippi PBX 2-Way Combo Local Opt 2 Calling Port			UEPPX	UEPA5	2.23	69.37	32.48	37.86	6.17						
FEATURES																
	All Features Offered			UEPPX	UEPVF	2.56	0.00	0.00								
NONRECURRING CHARGES (NRCs) - CURRENTLY COMBINED																
	2-Wire Voice Grade Loop/ Line Port Combination (PBX) - Conversion - Switch-As-Is			UEPPX	USAC2		7.96	1.91								

UNBUNDLED NETWORK ELEMENTS - Mississippi

Attachment: 2 Ex. A

CATEGORY	RATE ELEMENTS	Interim	Zone	.	USOC	RATES ($)					Svc Order Submitted Elec per LSR	Svc Order Submitted Manually per LSR	Incremental Charge - Manual Svc Order vs. Electronic-1st	Incremental Charge - Manual Svc Order vs. Electronic-Add'l	Incremental Charge - Manual Svc Order vs. Electronic-Disc 1st	Incremental Charge - Manual Svc Order vs. Electronic-Disc Add'l
						Rec	Nonrecurring		Nonrecurring Disconnect		OSS Rates ($)					
							First	Add'l	First	Add'l	SOMEC	SOMAN	SOMAN	SOMAN	SOMAN	SOMAN
	2-Wire Voice Grade Loop/ Line Port Combination (PBX) - Conversion - Switch with Change			UEPPX	USACC		7.96	1.91								
	2-Wire Voice Grade Loop / Line Port Combination - Conversion - Subsequent Database Update						0.00	0.00								
ADDITIONAL NRCs																
	2-Wire Voice Grade Loop/ Line Port Combination (PBX) - Subsequent Activity			UEPPX	USAS2	0.00	0.00	0.00								
	PBX Subsequent Activity - Change/Rearrange Multiline Hunt Group						7.36	7.36								
	Unbundled Miscellaneous Rate Element, Tag Loop at End User Premise			UEPPX	URETL		8.33	0.83								
OFF/ON PREMISES EXTENSION CHANNELS																
	Local Channel Voice grade, per termination		1	UEPPX	P2JHX	13.89	105.96	68.28	52.82	10.37						
	Local Channel Voice grade, per termination		2	UEPPX	P2JHX	18.75	105.96	68.28	52.82	10.37						
	Local Channel Voice grade, per termination		3	UEPPX	P2JHX	27.55	105.96	68.28	52.82	10.37						
	Local Channel Voice grade, per termination		4	UEPPX	P2JHX	45.72	105.96	68.28	52.82	10.37						
INTEROFFICE TRANSPORT																
	Interoffice Transport - Dedicated - 2 Wire Voice Grade - Facility Termination			UEPPX	U1TV2	20.32	40.77	27.57	17.26	7.11						
	Interoffice Transport - Dedicated - 2 Wire Voice Grade - Per Mile or Fraction Mile			UEPPX	U1TVM	0.0088	0.00	0.00								
2-WIRE VOICE GRADE LOOP WITH 2-WIRE ANALOG LINE COIN PORT																
UNE Port/Loop Combination Rates																
	2-Wire VG Coin Port/Loop Combo – Zone 1					13.22										
	2-Wire VG Coin Port/Loop Combo – Zone 2					18.13										
	2-Wire VG Coin Port/Loop Combo – Zone 3					27.26										
	2-Wire VG Coin Port/Loop Combo – Zone 4					45.91										
UNE Loop Rates																
	2-Wire Voice Grade Loop (SL1) - Zone 1		1	UEPCO	UEPLX	10.98										
	2-Wire Voice Grade Loop (SL1) - Zone 2		2	UEPCO	UEPLX	15.91										
	2-Wire Voice Grade Loop (SL1) - Zone 3		3	UEPCO	UEPLX	25.04										
	2-Wire Voice Grade Loop (SL1) - Zone 4		4	UEPCO	UEPLX	43.68										
2-Wire Voice Grade Line Ports (COIN)																
	2-Wire Coin 2-Way without Operator Screening and without Blocking (AL, KY, LA, MS)			UEPCO	UEPRF	2.23	40.31	19.84	24.90	6.58						
	2-Wire Coin 2-Way without Operator Screening and without Blocking; with Dialing Parity (Note 3) (MS)			UEPCO	UEPMC	2.23	40.31	19.84	24.90	6.58						
	2-Wire Coin 2-Way with Operator Screening and Blocking: 011, 900/976, 1+DDD (AL, KY, LA, MS)			UEPCO	UEPRA	2.23	40.31	19.84	24.90	6.58						
	2-Wire Coin 2-W with Operator Screening and Blocking: 011, 900/976, 1+DDD; with Dialing Parity (MS)			UEPCO	UEPMA	2.23	40.31	19.84	24.90	6.58						
	2-Wire Coin 2-Way with Operator Screening and 011 Blocking (AL, LA, MS)			UEPCO	UEPRB	2.23	40.31	19.84	24.90	6.58						
	2-Wire Coin 2-Way with Operator Screening and 011 Blocking; with Dialing Parity (MS)			UEPCO	UEPMB	2.23	40.31	19.84	24.90	6.58						
	2-Wire Coin 2-Way with Operator Screening & Blocking: 900/976, 1+DDD, 011+, & Local (AL, KY, LA, MS)			UEPCO	UEPCD	2.23	40.31	19.84	24.90	6.58						
	2-Wire Coin 2-W Operator Screening: 900 Block: 900/976, 1+DDD, 011+, Local; with Dialing Parity (MS)			UEPCO	UEPCJ	2.23	40.31	19.84	24.90	6.58						
	2-Wire Coin Outward without Blocking and without Operator Screening (KY, LA, MS)			UEPCO	UEPRN	2.23	40.31	19.84	24.90	6.58						
	2-Wire Coin Outward without Blocking and without Operator Screening; With Dailing Parity (MS)			UEPCO	UEPME	2.23	40.31	19.84	24.90	6.58						
	2-Wire Coin Outward with Operator Screening and 011 Blocking (GA, KY, MS)			UEPCO	UEPRJ	2.23	40.31	19.84	24.90	6.58						
	2-Wire Coin Outward with Operator Screening and 011 Blocking; with Dialing Parity (MS)			UEPCO	UEPMD	2.23	40.31	19.84	24.90	6.58						
	2-Wire Coin Outward with Operator Screening and Blocking: 011, 900/976, 1+DDD (AL, KY, LA, MS)			UEPCO	UEPRH	2.23	40.31	19.84	24.90	6.58						
	2-Wire Coin Outward Operator Screening & Blocking: 900/976, 1+DDD, 011+, and Local (AL, KY, LA, MS)			UEPCO	UEPCN	2.23	40.31	19.84	24.90	6.58						
	2-Wire Coin Out Operator Screen & Block: 900/976, 1+DDD, 011+, and Local; with Dialing Parity (MS)			UEPCO	UEPCS	2.23	40.31	19.84	24.90	6.58						
	2-Wire 2-Way Smartline with 900/976 (all states except LA)			UEPCO	UEPCK	2.23	40.31	19.84	24.90	6.58						

CATEGORY	RATE ELEMENTS	Interim	Zone	.	USOC	RATES ($)					Svc Order Submitted Elec per LSR	Svc Order Submitted Manually per LSR	Incremental Charge - Manual Svc Order vs. Electronic-1st	Incremental Charge - Manual Svc Order vs. Electronic-Add'l	Incremental Charge - Manual Svc Order vs. Electronic-Disc 1st	Incremental Charge - Manual Svc Order vs. Electronic-Disc Add'l
						Rec	Nonrecurring		Nonrecurring Disconnect		OSS Rates ($)					
							First	Add'l	First	Add'l	SOMEC	SOMAN	SOMAN	SOMAN	SOMAN	SOMAN
	2-Wire Coin Outward Smartline with 900/976 (all states except LA)			UEPCO	UEPCR	1.23	40.31	19.84	24.90	6.58						
ADDITIONAL UNE COIN PORT/LOOP (RC)																
	UNE Coin Port/Loop Combo Usage (Flat Rate)			UEPCO	URECU	4.62	0.00	0.00	0.00	0.00						
NONRECURRING CHARGES - CURRENTLY COMBINED																
	2-Wire Voice Grade Loop / Line Port Combination - Conversion - Switch-as-is			UEPCO	USAC2		0.0988	0.0988								
	2-Wire Voice Grade Loop / Line Port Combination - Conversion - Switch with change			UEPCO	USACC		0.0988	0.0988								
ADDITIONAL NRCs																
	2-Wire Voice Grade Loop/Line Port Combination - Subsequent Activity			UEPCO	USAS2		0.00	0.00								
	Unbundled Miscellaneous Rate Element, Tag Loop at End User Premise			UEPCO	URETL		8.33	0.83								
2-WIRE VOICE LOOP/ 2WIRE VOICE GRADE IO TRANSPORT/ 2-WIRE LINE PORT (RES)																
UNE Port/Loop Combination Rates																
	2-Wire VG Loop/IO Tranport/Port Combo - Zone 1					16.16										
	2-Wire VG Loop/IO Tranport/Port Combo - Zone 2					21.02										
	2-Wire VG Loop/IO Tranport/Port Combo - Zone 3					29.82										
	2-Wire VG Loop/IO Tranport/Port Combo - Zone 4					47.99										
UNE Loop Rates																
	2-Wire Voice Grade Loop (SL2) - Zone 1		1	UEPFR	UECF2	13.89										
	2-Wire Voice Grade Loop (SL2) - Zone 2		2	UEPFR	UECF2	18.75										
	2-Wire Voice Grade Loop (SL2) - Zone 3		3	UEPFR	UECF2	27.55										
	2-Wire Voice Grade Loop (SL2) - Zone 4		4	UEPFR	UECF2	45.72										
2-Wire Voice Grade Line Port Rates (Res)																
	2-Wire voice unbundled port - residence			UEPFR	UEPRL	2.27	108.35	70.57	54.24	11.70						
	2-Wire voice unbundled port with Caller ID - res			UEPFR	UEPRC	2.27	108.35	70.57	54.24	11.70						
	2-Wire voice unbundled port outgoing only - res			UEPFR	UEPRO	2.27	108.35	70.57	54.24	11.70						
	2-Wire voice Grade unbundled Mississippi extended local dialing parity port with Caller ID - res			UEPFR	UEPAT	2.27	108.35	70.57	54.24	11.70						
	2-Wire voice unbundles res, low usage line port with Caller ID (LUM)			UEPFR	UEPAP	2.27	108.35	70.57	54.24	11.70						
	2-Wire Voice Unbundled Mississippi Residence Dialing Plan without Caller ID			UEPFR	UEPWJ	2.27	108.35	70.57	54.24	11.70						
INTEROFFICE TRANSPORT																
	Interoffice Transport - Dedicated - 2 Wire Voice Grade - Facility Termination			UEPFR	U1TV2	20.32	40.77	27.57	17.26	7.11						
	Interoffice Transport - Dedicated - 2 Wire Voice Grade - Per Mile or Fraction Mile			UEPFR	1L5XX	0.0088										
FEATURES																
	All Features Offered			UEPFR	UEPVF	2.56	0.00	0.00								
NONRECURRING CHARGES (NRCs) - CURRENTLY COMBINED																
	2-Wire Loop / Dedicated IO Transport / 2 Wire Line Port Combination - Conversion - Switch-as-is			UEPFR	USAC2		16.94	3.72								
	2-Wire Loop / Dedicated IO Transport / 2 Wire Line Port Combination - Conversion - Switch-With-Change			UEPFR	USACC		16.94	3.72								
	Unbundled Miscellaneous Rate Element, Tag Designed Loop at End User Premise			UEPFR	URETN		11.19	1.10								
2-WIRE VOICE LOOP/ 2WIRE VOICE GRADE IO TRANSPORT/ 2-WIRE LINE PORT (BUS)																
UNE Port/Loop Combination Rates																
	2-Wire VG Loop/IO Tranport/Port Combo - Zone 1					16.16										
	2-Wire VG Loop/IO Tranport/Port Combo - Zone 2					21.02										
	2-Wire VG Loop/IO Tranport/Port Combo - Zone 3					29.82										
	2-Wire VG Loop/IO Tranport/Port Combo - Zone 4					47.99										
UNE Loop Rates																
	2-Wire Voice Grade Loop (SL2) - Zone 1		1	UEPFB	UECF2	13.89										
	2-Wire Voice Grade Loop (SL2) - Zone 2		2	UEPFB	UECF2	18.75										
	2-Wire Voice Grade Loop (SL2) - Zone 3		3	UEPFB	UECF2	27.55										
	2-Wire Voice Grade Loop (SL2) - Zone 4		4	UEPFB	UECF2	45.72										
2-Wire Voice Grade Line Port (Bus)																
	2-Wire voice unbundled port without Caller ID - bus			UEPFB	UEPBL	2.27	108.35	70.57	54.24	11.70						
	2-Wire voice unbundled port with Caller + E484 ID - bus			UEPFB	UEPBC	2.27	108.35	70.57	54.24	11.70						
	2-Wire voice unbundled port outgoing only - bus			UEPFB	UEPBO	2.27	108.35	70.57	54.24	11.70						

CATEGORY	RATE ELEMENTS	Interim	Zone	.	USOC	RATES ($) Rec	Nonrecurring First	Nonrecurring Add'l	Nonrecurring Disconnect First	Nonrecurring Disconnect Add'l	Svc Order Submitted Elec per LSR	Svc Order Submitted Manually per LSR	Attachment: 2 Ex. A Incremental Charge - Manual Svc Order vs. Electronic- 1st	Incremental Charge - Manual Svc Order vs. Electronic- Add'l	Incremental Charge - Manual Svc Order vs. Electronic- Disc 1st	Incremental Charge - Manual Svc Order vs. Electronic- Disc Add'l
											OSS Rates ($)					
											SOMEC	SOMAN	SOMAN	SOMAN	SOMAN	SOMAN
	2-Wire voice Grade unbundled Mississippi extended local dialing parity port with Caller ID - bus			UEPFB	UEPAY	2.27	108.35	70.57	54.24	11.70						
	2-Wire voice unbundled incoming only port with Caller ID - Bus			UEPFB	UEPB1	2.27	108.35	70.57	54.24	11.70						
	2-Wire Voice Unbundled Mississippi Business Dialing Plan without Caller ID			UEPFB	UEPWK	2.27	108.35	70.57	54.24	11.70						
INTEROFFICE TRANSPORT																
	Interoffice Transport - Dedicated - 2 Wire Voice Grade - Facility Termination			UEPFB	U1TV2	20.32	40.77	27.57	17.26	7.11						
	Interoffice Transport - Dedicated - 2 Wire Voice Grade - Per Mile or Fraction Mile			UEPFB	1L5XX	0.0088										
FEATURES																
	All Features Offered			UEPFB	UEPVF	2.56	0.00	0.00								
NONRECURRING CHARGES (NRCs) - CURRENTLY COMBINED																
	2-Wire Loop / Dedicated IO Transport / 2 Wire Line Port Combination - Conversion - Switch-as-is			UEPFB	USAC2		16.94	3.72								
	2-Wire Loop / Dedicated IO Transport / 2 Wire Line Port Combination - Conversion - Switch with change			UEPFB	USACC		16.94	3.72								
	Unbundled Miscellaneous Rate Element, Tag Designed Loop at End User Premise			UEPFB	URETN		11.19	1.10								
2-WIRE VOICE LOOP/ 2WIRE VOICE GRADE IO TRANSPORT/ 2-WIRE LINE PORT (PBX)																
UNE Port/Loop Combination Rates																
	2-Wire VG Loop/IO Tranport/Port Combo - Zone 1					16.16										
	2-Wire VG Loop/IO Tranport/Port Combo - Zone 2					21.02										
	2-Wire VG Loop/IO Tranport/Port Combo - Zone 3					29.82										
	2-Wire VG Loop/IO Tranport/Port Combo - Zone 4					47.99										
UNE Loop Rates																
	2-Wire Voice Grade Loop (SL2) - Zone 1		1	UEPFP	UECF2	13.89										
	2-Wire Voice Grade Loop (SL2) - Zone 2		2	UEPFP	UECF2	18.75										
	2-Wire Voice Grade Loop (SL2) - Zone 3		3	UEPFP	UECF2	27.55										
	2-Wire Voice Grade Loop (SL2) - Zone 4		4	UEPFP	UECF2	45.72										
2-Wire Voice Grade Line Port Rates (BUS - PBX)																
	Line Side Unbundled Combination 2-Way PBX Trunk Port - Bus			UEPFP	UEPPC	2.27	137.41	80.14	67.20	11.29						
	Line Side Unbundled Outward PBX Trunk Port - Bus			UEPFP	UEPPO	2.27	137.41	80.14	67.20	11.29						
	Line Side Unbundled Incoming PBX Trunk Port - Bus			UEPFP	UEPP1	2.27	137.41	80.14	67.20	11.29						
	2-Wire Voice Unbundled PBX LD Terminal Ports			UEPFP	UEPLD	2.27	137.41	80.14	67.20	11.29						
	2-Wire Voice Unbundled 2-Way Combination PBX Usage Port			UEPFP	UEPXA	2.27	137.41	80.14	67.20	11.29						
	2-Wire Voice Unbundled PBX Toll Terminal Hotel Ports			UEPFP	UEPXB	2.27	137.41	80.14	67.20	11.29						
	2-Wire Voice Unbundled PBX LD DDD Terminals Port			UEPFP	UEPXC	2.27	137.41	80.14	67.20	11.29						
	2-Wire Voice Unbundled PBX LD Terminal Switchboard Port			UEPFP	UEPXD	2.27	137.41	80.14	67.20	11.29						
	2-Wire Voice Unbundled PBX LD Terminal Switchboard IDD Capable Port			UEPFP	UEPXE	2.27	137.41	80.14	67.20	11.29						
	2-Wire Voice Unbundled 2-Way PBX Hotel/Hospital Economy Administrative Calling Port			UEPFP	UEPXL	2.27	137.41	80.14	67.20	11.29						
	2-Wire Voice Unbundled 2-Way PBX Hotel/Hospital Economy Room Calling Port			UEPFP	UEPXM	2.27	137.41	80.14	67.20	11.29						
	2-Wire Voice Unbundled 1-Way Outgoing PBX Hotel/Hospital Discount Room Calling Port			UEPFP	UEPXO	2.27	137.41	80.14	67.20	11.29						
	2-Wire Voice Unbundled 2-Way PBX Mississippi Local Economy Calling Port			UEPFP	UEPXQ	2.27	137.41	80.14	67.20	11.29						
	2-Wire Voice Unbundled 2-Way PBX Mississippi Local Optional Calling Port			UEPFP	UEPXR	2.27	137.41	80.14	67.20	11.29						
	2-Wire Voice Unbundled 1-Way Outgoing PBX Measured Port			UEPFP	UEPXS	2.27	137.41	80.14	67.20	11.29						
	Mississippi PBX 2-Way Combo Local Opt 2 Calling Port			UEPFP	UEPA5	2.27	137.41	80.14	67.20	11.29						
INTEROFFICE TRANSPORT																
	Interoffice Transport - Dedicated - 2 Wire Voice Grade - Facility Termination			UEPFP	U1TV2	20.32	40.77	27.57	17.26	7.11						
	Interoffice Transport - Dedicated - 2 Wire Voice Grade - Per Mile or Fraction Mile			UEPFP	1L5XX	0.0088										
FEATURES																
	All Features Offered			UEPFP	UEPVF	2.56	0.00	0.00								
NONRECURRING CHARGES (NRCs) - CURRENTLY COMBINED																
	2-Wire Loop / Dedicated IO Transport / 2 Wire Line Port Combination - Conversion - Switch-as-is			UEPFP	USAC2		16.94	3.72								

CATEGORY	RATE ELEMENTS	Interim	Zone	.	USOC	RATES ($) Rec	Nonrecurring First	Nonrecurring Add'l	Nonrecurring Disconnect First	Nonrecurring Disconnect Add'l	Svc Order Submitted Elec per LSR (OSS Rates ($)) SOMEC	Svc Order Submitted Manually per LSR (OSS Rates ($)) SOMAN	Incremental Charge - Manual Svc Order vs. Electronic-1st (OSS Rates ($)) SOMAN	Incremental Charge - Manual Svc Order vs. Electronic-Add'l (OSS Rates ($)) SOMAN	Incremental Charge - Manual Svc Order vs. Electronic-Disc 1st (OSS Rates ($)) SOMAN	Incremental Charge - Manual Svc Order vs. Electronic-Disc Add'l (OSS Rates ($)) SOMAN
	2-Wire Loop / Dedicated IO Transport / 2 Wire Line Port Combination - Conversion - Switch with change			UEPFP	USACC		16.94	3.72								
	Unbundled Miscellaneous Rate Element, Tag Designed Loop at End User Premise			UEPFP	URETN		11.19	1.10								
UNBUNDLED PORT/LOOP COMBINATIONS - COST BASED RATES																
2-WIRE VOICE GRADE LOOP- BUS ONLY - WITH 2-WIRE DID TRUNK PORT																
UNE Port/Loop Combination Rates																
	2-Wire VG Loop/2-Wire DID Trunk Port Combo - UNE Zone 1					22.32										
	2-Wire VG Loop/2-Wire DID Trunk Port Combo - UNE Zone 2					27.16										
	2-Wire VG Loop/2-Wire DID Trunk Port Combo - UNE Zone 3					35.98										
	2-Wire VG Loop/2-Wire DID Trunk Port Combo - UNE Zone 4					54.15										
UNE Loop Rates																
	2-Wire Analog Voice Grade Loop - (SL2) - UNE Zone 1		1	UEPPX	UECD1	13.89										
	2-Wire Analog Voice Grade Loop - (SL2) - UNE Zone 2		2	UEPPX	UECD1	18.75										
	2-Wire Analog Voice Grade Loop - (SL2) - UNE Zone 3		3	UEPPX	UECD1	27.55										
	2-Wire Analog Voice Grade Loop - (SL2) - UNE Zone 4		4	UEPPX	UECD1	45.72										
UNE Port Rate																
	Exchange Ports - 2-Wire DID Port			UEPPX	UEPD1	8.43	225.96	87.13	114.59	14.25						
NONRECURRING CHARGES - CURRENTLY COMBINED																
	2-Wire Voice Grade Loop / 2-Wire DID Trunk Port Combination - Switch-as-is			UEPPX	USAC1		7.35	1.88								
	2-Wire Voice Grade Loop / 2-Wire DID Trunk Port Conversion with BellSouth Allowable Changes			UEPPX	USA1C		7.35	1.88								
ADDITIONAL NRCs																
	2-Wire DID Subsequent Activity - Add Trunks, Per Trunk			UEPPX	USAS1		26.94	26.94								
	Unbundled Miscellaneous Rate Element, Tag Designed Loop at End User Premise			UEPPX	URETN		11.19	1.10								
Telephone Number/Trunk Group Establisment Charges																
	DID Trunk Termination (One Per Port)			UEPPX	NDT	0.00	0.00	0.00								
	Additional DID Numbers for each Group of 20 DID Numbers			UEPPX	ND4	0.00	0.00	0.00								
	DID Numbers, Non- consecutive DID Numbers , Per Number			UEPPX	ND5	0.00	0.00	0.00								
	Reserve Non-Consecutive DID numbers			UEPPX	ND6	0.00	0.00	0.00								
	Reserve DID Numbers			UEPPX	NDV	0.00	0.00	0.00								
2-WIRE ISDN DIGITAL GRADE LOOP WITH 2-WIRE ISDN DIGITAL LINE SIDE PORT																
UNE Port/Loop Combination Rates																
	2W ISDN Digital Grade Loop/2W ISDN Digital Line Side Port - UNE Zone 1					29.29										
	2W ISDN Digital Grade Loop/2W ISDN Digital Line Side Port - UNE Zone 2					36.00										
	2W ISDN Digital Grade Loop/2W ISDN Digital Line Side Port - UNE Zone 3					46.18										
	2W ISDN Digital Grade Loop/2W ISDN Digital Line Side Port - UNE Zone 4					68.61										
UNE Loop Rates																
	2-Wire ISDN Digital Grade Loop - UNE Zone 1		1	UEPPB UEPPR	USL2X	18.26										
	2-Wire ISDN Digital Grade Loop - UNE Zone 2		2	UEPPB UEPPR	USL2X	24.67										
	2-Wire ISDN Digital Grade Loop - UNE Zone 3		3	UEPPB UEPPR	USL2X	34.85										
	2-Wire ISDN Digital Grade Loop - UNE Zone 4		4	UEPPB UEPPR	USL2X	57.28										
UNE Port Rate																
	Exchange Port - 2-Wire ISDN Line Side Port			UEPPR	UEPPR	11.33	190.80	133.22	100.72	21.13						
	Exchange Port - 2-Wire ISDN Line Side Port			UEPPB	UEPPB	11.33	190.80	133.22	100.72	21.13						
NONRECURRING CHARGES - CURRENTLY COMBINED																
	2-Wire ISDN Digital Grade Loop / 2-Wire ISDN Line Side Port Combination - Conversion			UEPPB UEPPR	USACB	0.00	38.73	27.17								
ADDITIONAL NRCs																
	Unbundled Miscellaneous Rate Element, Tag Designed Loop at End User Premise			UEPPB UEPPR	URETN		11.19	1.10								
	Unbundled Miscellaneous Rate Element, Tag Loop at End User Premise			UEPPB UEPPR	URETL		8.33	0.83								
B-CHANNEL USER PROFILE ACCESS:																
	CVS/CSD (DMS/5ESS)			UEPPB UEPPR	U1UCA	0.00	0.00	0.00								
	CVS (EWSD)			UEPPB UEPPR	U1UCB	0.00	0.00	0.00								
	CSD			UEPPB UEPPR	U1UCC	0.00	0.00	0.00								

UNBUNDLED NETWORK ELEMENTS - Mississippi

Attachment: 2 Ex. A

CATEGORY	RATE ELEMENTS	Interim	Zone	.	USOC	RATES ($) Rec	Nonrecurring First	Nonrecurring Add'l	Nonrecurring Disconnect First	Nonrecurring Disconnect Add'l	Svc Order Submitted Elec per LSR	Svc Order Submitted Manually per LSR	Incremental Charge - Manual Svc Order vs. Electronic-1st	Incremental Charge - Manual Svc Order vs. Electronic-Add'l	Incremental Charge - Manual Svc Order vs. Electronic-Disc 1st	Incremental Charge - Manual Svc Order vs. Electronic-Disc Add'l
											OSS Rates ($)					
							First	Add'l	First	Add'l	SOMEC	SOMAN	SOMAN	SOMAN	SOMAN	SOMAN
	B-CHANNEL AREA PLUS USER PROFILE ACCESS: (AL,KY,LA,MS SC,MS, & TN)															
	CVS/CSD (DMS/5ESS)			UEPPB UEPPR	U1UCD	0.00	0.00	0.00								
	CVS (EWSD)			UEPPB UEPPR	U1UCE	0.00	0.00	0.00								
	CSD			UEPPB UEPPR	U1UCF	0.00	0.00	0.00								
	USER TERMINAL PROFILE															
	User Terminal Profile (EWSD only)			UEPPB UEPPR	U1UMA	0.00	0.00	0.00								
	VERTICAL FEATURES															
	All Vertical Features - One per Channel B User Profile			UEPPB UEPPR	UEPVF	2.56	0.00	0.00								
	INTEROFFICE CHANNEL MILEAGE															
	Interoffice Channel mileage each, including first mile and facilities termination			UEPPB UEPPR	M1GNC	22.5298	40.77	27.57	17.26	7.11						
	Interoffice Channel mileage each, additional mile			UEPPB UEPPR	M1GNM	0.0098	0.00	0.00								
UNBUNDLED CENTREX PORT/LOOP COMBINATIONS - COST BASED RATES																
	UNE-P CENTREX - 1AESS - (Valid in AL,FL,GA,KY,LA,MS,&TN only)															
	2-Wire VG Loop/2-Wire Voice Grade Port (Centrex) Combo															
	UNE Port/Loop Combination Rates (Non-Design)															
	2-Wire VG Loop/2-Wire Voice Grade Port (Centrex) Port Combo - Non-Design					13.22										
	2-Wire VG Loop/2-Wire Voice Grade Port (Centrex)Port Combo - Non-Design					18.13										
	2-Wire VG Loop/2-Wire Voice Grade Port (Centrex)Port Combo - Non-Design					27.26										
	2-Wire VG Loop/2-Wire Voice Grade Port (Centrex) Port Combo - Non-Design					45.91										
	UNE Port/Loop Combination Rates (Design)															
	2-Wire VG Loop/2-Wire Voice Grade Port (Centrex) Port Combo - Design					16.12										
	2-Wire VG Loop/2-Wire Voice Grade Port (Centrex)Port Combo - Design					20.98										
	2-Wire VG Loop/2-Wire Voice Grade Port (Centrex)Port Combo - Design					29.78										
	2-Wire VG Loop/2-Wire Voice Grade Port (Centrex) Port Combo - Design					47.95										
	UNE Loop Rate															
	2-Wire Voice Grade Loop (SL 1) - Zone 1		1	UEP91	UECS1	10.98										
	2-Wire Voice Grade Loop (SL 1) - Zone 2		2	UEP91	UECS1	15.91										
	2-Wire Voice Grade Loop (SL 1) - Zone 3		3	UEP91	UECS1	25.04										
	2-Wire Voice Grade Loop (SL 1) - Zone 4		4	UEP91	UECS1	43.68										
	2-Wire Voice Grade Loop (SL 2) - Zone 1		1	UEP91	UECS2	13.89										
	2-Wire Voice Grade Loop (SL 2) - Zone 2		2	UEP91	UECS2	18.75										
	2-Wire Voice Grade Loop (SL 2) - Zone 3		3	UEP91	UECS2	27.55										
	2-Wire Voice Grade Loop (SL 2) - Zone 4		4	UEP91	UECS2	45.72										
	UNE Ports															
	All States (Except North Carolina and Sout Carolina)															
	2-Wire Voice Grade Port (Centrex) Basic Local Area			UEP91	UEPYA	2.23	40.31	19.84	24.90	6.58						
	2-Wire Voice Grade Port (Centrex 800 termination)Basic Local Area			UEP91	UEPYB	2.23	40.31	19.84	24.90	6.58						
	2-Wire Voice Grade Port (Centrex with Caller ID)Note1 Basic Local Area			UEP91	UEPYH	2.23	40.31	19.84	24.90	6.58						
	2-Wire Voice Grade Port (Centrex from diff Serving Wire Center) Note 2, 3 Basic Local Area			UEP91	UEPYM	2.23	108.35	70.57	54.24	11.70						
	2-Wire Voice Grade Port, Diff Serving Wire Center - 800 Service Term - Basic Local Area			UEP91	UEPYZ	2.23	108.35	70.57	54.24	11.70						
	2-Wire Voice Grade Port terminated in on Megalink or equivalent - Basic Local Area			UEP91	UEPY9	2.23	40.31	19.84	24.90	6.58						
	2-Wire Voice Grade Port Terminated on 800 Service Term - Basic Local Area			UEP91	UEPY2	2.23	40.31	19.84	24.90	6.58						
	AL, KY, LA, MS, & TN Only															
	2-Wire Voice Grade Port (Centrex)			UEP91	UEPQA	2.23	40.31	19.84	24.90	6.58						
	2-Wire Voice Grade Port (Centrex 800 termination)			UEP91	UEPQB	2.23	40.31	19.84	24.90	6.58						
	2-Wire Voice Grade Port (Centrex with Caller ID)1			UEP91	UEPQH	2.23	40.31	19.84	24.90	6.58						
	2-Wire Voice Grade Port (Centrex from diff Serving Wire Center)2,3			UEP91	UEPQM	2.23	108.35	70.57	54.24	11.70						

UNBUNDLED NETWORK ELEMENTS - Mississippi

Attachment: 2 Ex. A

CATEGORY	RATE ELEMENTS	Interim	Zone	.	USOC	RATES ($)					Svc Order Submitted Elec per LSR	Svc Order Submitted Manually per LSR	Incremental Charge - Manual Svc Order vs. Electronic-1st	Incremental Charge - Manual Svc Order vs. Electronic-Add'l	Incremental Charge - Manual Svc Order vs. Electronic-Disc 1st	Incremental Charge - Manual Svc Order vs. Electronic-Disc Add'l
						Rec	Nonrecurring		Nonrecurring Disconnect		OSS Rates ($)					
							First	Add'l	First	Add'l	SOMEC	SOMAN	SOMAN	SOMAN	SOMAN	SOMAN
	2-Wire Voice Grade Port, Diff Serving Wire Center - 2,3 - 800 Service Term			UEP91	UEPQZ	2.23	108.35	70.57	54.24	11.70						
	2-Wire Voice Grade Port terminated in on Megalink or equivalent			UEP91	UEPQ9	2.23	40.31	19.84	24.90	6.58						
	2-Wire Voice Grade Port Terminated on 800 Service Term			UEP91	UEPQ2	2.23	40.31	19.84	24.90	6.58						
Local Switching																
	Centrex Intercom Funtionality, per port			UEP91	URECS	0.7947										
Features																
	All Standard Features Offered, per port			UEP91	UEPVF	2.56										
	All Select Features Offered, per port			UEP91	UEPVS	0.00	404.98									
	All Centrex Control Features Offered, per port			UEP91	UEPVC	2.56										
NARS																
	Unbundled Network Access Register - Combination			UEP91	UARCX	0.00	0.00	0.00	0.00	0.00						
	Unbundled Network Access Register - Indial			UEP91	UAR1X	0.00	0.00	0.00	0.00	0.00						
	Unbundled Network Access Register - Outdial			UEP91	UAROX	0.00	0.00	0.00	0.00	0.00						
Miscellaneous Terminations																
2-Wire Trunk Side																
	Trunk Side Terminations, each			UEP91	CENA6	8.25	120.00	18.85	61.77	3.88						
Interoffice Channel Mileage - 2-Wire																
	Interoffice Channel Facilities Termination - Voice Grade			UEP91	M1GBC	22.52	40.77	27.57	17.26	7.11						
	Interoffice Channel mileage, per mile or fraction of mile			UEP91	M1GBM	0.0098										
Feature Activations (DS0) Centrex Loops on Channelized DS1 Service																
D4 Channel Bank Feature Activations																
	Feature Activation on D-4 Channel Bank Centrex Loop Slot			UEP91	1PQWS	0.57										
	Feature Activation on D-4 Channel Bank FX line Side Loop Slot			UEP91	1PQW6	0.57										
	Feature Activation on D-4 Channel Bank FX Trunk Side Loop Slot			UEP91	1PQW7	0.57										
	Feature Activation on D-4 Channel Bank Centrex Loop Slot - Different Wire Center			UEP91	1PQWP	0.57										
	Feature Activation on D-4 Channel Bank Private Line Loop Slot			UEP91	1PQWV	0.57										
	Feature Activation on D-4 Channel Bank Tjie Line/Trunk Loop Slot			UEP91	1PQWQ	0.57										
	Feature Activation on D-4 Channel Bank WATS Loop Slot			UEP91	1PQWA	0.57										
Non-Recurring Charges (NRC) Associated with UNE-P Centrex																
	Conversion - Currently Combined Switch-As-Is with allowed changes, per port			UEP91	USAC2		0.10	0.10								
	Conversion of Existing Centrex Common Block			UEP91	USACN		37.97	16.68								
	New Centrex Standard Common Block			UEP91	M1ACS	0.00	666.32									
	New Centrex Customized Common Block			UEP91	M1ACC	0.00	666.32									
	Secondary Block, per Block			UEP91	M2CC1	0.00	77.91									
	NAR Establishment Charge, Per Occasion			UEP91	URECA	0.00	72.63									
Additional Non-Recurring Charges (NRC)																
	Unbundled Miscellaneous Rate Element, Tag Loop at End Use Premise			UEP91	URETL		8.33	0.83								
	Unbundled Miscellaneous Rate Element, Tag Design Loop at End Use Premise			UEP91	URETN		11.19	1.10								
UNE-P CENTREX - 5ESS (Valid in All States)																
2-Wire VG Loop/2-Wire Voice Grade Port (Centrex) Combo																
UNE Port/Loop Combination Rates (Non-Design)																
	2-Wire VG Loop/2-Wire Voice Grade Port (Centrex) Port Combo - Non-Design					13.22										
	2-Wire VG Loop/2-Wire Voice Grade Port (Centrex)Port Combo - Non-Design					18.13										
	2-Wire VG Loop/2-Wire Voice Grade Port (Centrex)Port Combo - Non-Design					27.26										
	2-Wire VG Loop/2-Wire Voice Grade Port (Centrex) Port Combo - Non-Design					45.91										
UNE Port/Loop Combination Rates (Design)																
	2-Wire VG Loop/2-Wire Voice Grade Port (Centrex) Port Combo - Design					16.12										
	2-Wire VG Loop/2-Wire Voice Grade Port (Centrex)Port Combo - Design					20.98										

CATEGORY	RATE ELEMENTS	Interim	Zone	.	USOC	RATES ($)					Svc Order Submitted Elec per LSR	Svc Order Submitted Manually per LSR	Incremental Charge - Manual Svc Order vs. Electronic-1st	Incremental Charge - Manual Svc Order vs. Electronic-Add'l	Incremental Charge - Manual Svc Order vs. Electronic-Disc 1st	Incremental Charge - Manual Svc Order vs. Electronic-Disc Add'l
						Rec	Nonrecurring		Nonrecurring Disconnect		OSS Rates ($)					
							First	Add'l	First	Add'l	SOMEC	SOMAN	SOMAN	SOMAN	SOMAN	SOMAN
	2-Wire VG Loop/2-Wire Voice Grade Port (Centrex)Port Combo - Design					29.78										
	2-Wire VG Loop/2-Wire Voice Grade Port (Centrex) Port Combo - Design					47.95										
UNE Loop Rate																
	2-Wire Voice Grade Loop (SL 1) - Zone 1		1	UEP95	UECS1	10.98										
	2-Wire Voice Grade Loop (SL 1) - Zone 2		2	UEP95	UECS1	15.91										
	2-Wire Voice Grade Loop (SL 1) - Zone 3		3	UEP95	UECS1	25.04										
	2-Wire Voice Grade Loop (SL 1) - Zone 4		4	UEP95	UECS1	43.68										
	2-Wire Voice Grade Loop (SL 2) - Zone 1		1	UEP95	UECS2	13.89										
	2-Wire Voice Grade Loop (SL 2) - Zone 2		2	UEP95	UECS2	18.75										
	2-Wire Voice Grade Loop (SL 2) - Zone 3		3	UEP95	UECS2	27.55										
	2-Wire Voice Grade Loop (SL 2) - Zone 4		4	UEP95	UECS2	45.72										
UNE Port Rate																
All States																
	2-Wire Voice Grade Port (Centrex) Basic Local Area			UEP95	UEPYA	2.23	40.31	19.84	24.90	6.58						
	2-Wire Voice Grade Port (Centrex 800 termination)			UEP95	UEPYB	2.23	40.31	19.84	24.90	6.58						
	2-Wire Voice Grade Port (Centrex with Caller ID)1Basic Local Area			UEP95	UEPYH	2.23	40.31	19.84	24.90	6.58						
	2-Wire Voice Grade Port (Centrex from diff Serving Wire Center)2,3 Basic Local Area			UEP95	UEPYM	2.23	108.35	70.57	54.24	11.70						
	2-Wire Voice Grade Port, Diff Serving Wire Center 2,3 - 800 Service Term - Basic Local Area			UEP95	UEPYZ	2.23	108.35	70.57	54.24	11.70						
	2-Wire Voice Grade Port terminated in on Megalink or equivalent - Basic Local Area			UEP95	UEPY9	2.23	40.31	19.84	24.90	6.58						
	2-Wire Voice Grade Port Terminated on 800 Service Term - Basic Local Area			UEP95	UEPY2	2.23	40.31	19.84	24.90	6.58						
AL, KY, LA, MS, SC, & TN Only																
	2-Wire Voice Grade Port (Centrex)			UEP95	UEPQA	2.23	40.31	19.84	24.90	6.58						
	2-Wire Voice Grade Port (Centrex 800 termination)			UEP95	UEPQB	2.23	40.31	19.84	24.90	6.58						
	2-Wire Voice Grade Port (Centrex with Caller ID)1			UEP95	UEPQH	2.23	40.31	19.84	24.90	6.58						
	2-Wire Voice Grade Port (Centrex from diff Serving Wire Center)2,3			UEP95	UEPQM	2.23	108.35	70.57	54.24	11.70						
	2-Wire Voice Grade Port, Diff Serving Wire Center - 800 Service Term 2,3			UEP95	UEPQZ	2.23	108.35	70.57	54.24	11.70						
	2-Wire Voice Grade Port terminated in on Megalink or equivalent			UEP95	UEPQ9	2.23	40.31	19.84	24.90	6.58						
	2-Wire Voice Grade Port Terminated on 800 Service Term			UEP95	UEPQ2	2.23	40.31	19.84	24.90	6.58						
FL & GA Only																
Local Switching																
	Centrex Intercom Funtionality, per port			UEP95	URECS	0.7947										
Features																
	All Standard Features Offered, per port			UEP95	UEPVF	2.56										
	All Select Features Offered, per port			UEP95	UEPVS	0.00	404.98									
	All Centrex Control Features Offered, per port			UEP95	UEPVC	2.56										
NARS																
	Unbundled Network Access Register - Combination			UEP95	UARCX	0.00	0.00	0.00	0.00	0.00						
	Unbundled Network Access Register - Indial			UEP95	UAR1X	0.00	0.00	0.00	0.00	0.00						
	Unbundled Network Access Register - Outdial			UEP95	UAROX	0.00	0.00	0.00	0.00	0.00						
Miscellaneous Terminations																
2-Wire Trunk Side																
	Trunk Side Terminations, each			UEP95	CEND6	8.25	120.00	18.85	61.77	3.88						
4-Wire Digital (1.544 Megabits)																
	DS1 Circuit Terminations, each			UEP95	M1HD1	58.41	203.19	96.25	74.86	2.54						
	DS0 Channels Activated, each			UEP95	M1HDO	0.00	14.56									
Interoffice Channel Mileage - 2-Wire																
	Interoffice Channel Facilities Termination			UEP95	M1GBC	22.52	40.77	27.57	17.26	7.11						
	Interoffice Channel mileage, per mile or fraction of mile			UEP95	M1GBM	0.0098										
Feature Activations (DS0) Centrex Loops on Channelized DS1 Service																
D4 Channel Bank Feature Activations																
	Feature Activation on D-4 Channel Bank Centrex Loop Slot			UEP95	1PQWS	0.57										
	Feature Activation on D-4 Channel Bank FX line Side Loop Slot			UEP95	1PQW6	0.57										

CATEGORY	RATE ELEMENTS	Interim	Zone	.	USOC	RATES ($)					Svc Order Submitted Elec per LSR	Svc Order Submitted Manually per LSR	Incremental Charge - Manual Svc Order vs. Electronic-1st	Incremental Charge - Manual Svc Order vs. Electronic-Add'l	Incremental Charge - Manual Svc Order vs. Electronic-Disc 1st	Incremental Charge - Manual Svc Order vs. Electronic-Disc Add'l
						Rec	Nonrecurring		Nonrecurring Disconnect		OSS Rates ($)					
							First	Add'l	First	Add'l	SOMEC	SOMAN	SOMAN	SOMAN	SOMAN	SOMAN
	Feature Activation on D-4 Channel Bank FX Trunk Side Loop Slot			UEP95	1PQW7	0.57										
	Feature Activation on D-4 Channel Bank Centrex Loop Slot - Different Wire Center			UEP95	1PQWP	0.57										
	Feature Activation on D-4 Channel Bank Private Line Loop Slot			UEP95	1PQWV	0.57										
	Feature Activation on D-4 Channel Bank Tjie Line/Trunk Loop Slot			UEP95	1PQWQ	0.57										
	Feature Activation on D-4 Channel Bank WATS Loop Slot			UEP95	1PQWA	0.57										
	Non-Recurring Charges (NRC) Associated with UNE-P Centrex															
	NRC Conversion Currently Combined Switch-As-Is with allowed changes, per port			UEP95	USAC2		0.10	0.10								
	Conversion of Existing Centrex Common Block, each			UEP95	USACN		37.97	16.68								
	New Centrex Standard Common Block			UEP95	M1ACS	0.00	666.32									
	New Centrex Customized Common Block			UEP95	M1ACC	0.00	666.32									
	NAR Establishment Charge, Per Occasion			UEP95	URECA	0.00	72.63									
	Additional Non-Recurring Charges (NRC)															
	Unbundled Miscellaneous Rate Element, Tag Loop at End Use Premise			UEP95	URETL		8.33	0.83								
	Unbundled Miscellaneous Rate Element, Tag Design Loop at End Use Premise			UEP95	URETN		11.19	1.10								
	UNE-P CENTREX - DMS100 (Valid in All States)															
	2-Wire VG Loop/2-Wire Voice Grade Port (Centrex) Combo															
	UNE Port/Loop Combination Rates (Non-Design)															
	2-Wire VG Loop/2-Wire Voice Grade Port (Centrex) Port Combo - Non-Design					13.22										
	2-Wire VG Loop/2-Wire Voice Grade Port (Centrex)Port Combo - Non-Design					18.13										
	2-Wire VG Loop/2-Wire Voice Grade Port (Centrex)Port Combo - Non-Design					27.26										
	2-Wire VG Loop/2-Wire Voice Grade Port (Centrex) Port Combo - Non-Design					45.91										
	UNE Port/Loop Combination Rates (Design)															
	2-Wire VG Loop/2-Wire Voice Grade Port (Centrex) Port Combo - Design					16.12										
	2-Wire VG Loop/2-Wire Voice Grade Port (Centrex)Port Combo - Design					20.98										
	2-Wire VG Loop/2-Wire Voice Grade Port (Centrex)Port Combo - Design					29.78										
	2-Wire VG Loop/2-Wire Voice Grade Port (Centrex) Port Combo - Design					47.95										
	UNE Loop Rate															
	2-Wire Voice Grade Loop (SL 1) - Zone 1		1	UEP9D	UECS1	10.98										
	2-Wire Voice Grade Loop (SL 1) - Zone 2		2	UEP9D	UECS1	15.91										
	2-Wire Voice Grade Loop (SL 1) - Zone 3		3	UEP9D	UECS1	25.04										
	2-Wire Voice Grade Loop (SL 1) - Zone 4		4	UEP9D	UECS1	43.68										
	2-Wire Voice Grade Loop (SL 2) - Zone 1		1	UEP9D	UECS2	13.89										
	2-Wire Voice Grade Loop (SL 2) - Zone 2		2	UEP9D	UECS2	18.75										
	2-Wire Voice Grade Loop (SL 2) - Zone 3		3	UEP9D	UECS2	27.55										
	2-Wire Voice Grade Loop (SL 2) - Zone 4		4	UEP9D	UECS2	45.72										
	UNE Port Rate															
	ALL STATES															
	2-Wire Voice Grade Port (Centrex) Basic Local Area			UEP9D	UEPYA	2.23	40.31	19.84	24.90	6.58						
	2-Wire Voice Grade Port (Centrex 800 termination)Basic Local Area			UEP9D	UEPYB	2.23	40.31	19.84	24.90	6.58						
	2-Wire Voice Grade Port (Centrex / EBS-PSET)3Basic Local Area			UEP9D	UEPYC	2.23	40.31	19.84	24.90	6.58						
	2-Wire Voice Grade Port (Centrex / EBS-M5009)3Basic Local Area			UEP9D	UEPYD	2.23	40.31	19.84	24.90	6.58						
	2-Wire Voice Grade Port (Centrex / EBS-M5209))3 Basic Local Area			UEP9D	UEPYE	2.23	40.31	19.84	24.90	6.58						
	2-Wire Voice Grade Port (Centrex / EBS-M5112))3 Basic Local Area			UEP9D	UEPYF	2.23	40.31	19.84	24.90	6.58						

CATEGORY		RATE ELEMENTS	Interim	Zone	.	USOC	RATES ($)					Svc Order Submitted Elec per LSR	Svc Order Submitted Manually per LSR	Incremental Charge - Manual Svc Order vs. Electronic-1st	Incremental Charge - Manual Svc Order vs. Electronic-Add'l	Incremental Charge - Manual Svc Order vs. Electronic-Disc 1st	Incremental Charge - Manual Svc Order vs. Electronic-Disc Add'l	
							Rec	Nonrecurring		Nonrecurring Disconnect		OSS Rates ($)						
								First	Add'l	First	Add'l	SOMEC	SOMAN	SOMAN	SOMAN	SOMAN	SOMAN	
		2-Wire Voice Grade Port (Centrex / EBS-M5312))3Basic Local Area			UEP9D	UEPYG	2.23	40.31	19.84	24.90	6.58							
		2-Wire Voice Grade Port (Centrex / EBS-M5008))3 Basic Local Area			UEP9D	UEPYT	2.23	40.31	19.84	24.90	6.58							
		2-Wire Voice Grade Port (Centrex / EBS-M5208))3 Basic Local Area			UEP9D	UEPYU	2.23	40.31	19.84	24.90	6.58							
		2-Wire Voice Grade Port (Centrex / EBS-M5216))3 Basic Local Area			UEP9D	UEPYV	2.23	40.31	19.84	24.90	6.58							
		2-Wire Voice Grade Port (Centrex / EBS-M5316))3 Basic Local Area			UEP9D	UEPY3	2.23	40.31	19.84	24.90	6.58							
		2-Wire Voice Grade Port (Centrex with Caller ID) Basic Local Area			UEP9D	UEPYH	2.23	40.31	19.84	24.90	6.58							
		2-Wire Voice Grade Port (Centrex/Caller ID/Msg Wtg Lamp Indication))4 Basic Local Area			UEP9D	UEPYW	2.23	40.31	19.84	24.90	6.58							
		2-Wire Voice Grade Port (Centrex/Msg Wtg Lamp Indication))4 Basic Local Area			UEP9D	UEPYJ	2.23	40.31	19.84	24.90	6.58							
		2-Wire Voice Grade Port (Centrex from diff Serving Wire Center) 2,3-Basic Local Area			UEP9D	UEPYM	2.23	108.35	70.57	54.24	11.70							
		2-Wire Voice Grade Port (Centrex/differ SWC /EBS-PSET)2,3,4 Basic Local Area			UEP9D	UEPYO	2.23	108.35	70.57	54.24	11.70							
		2-Wire Voice Grade Port (Centrex/differ SWC /EBS-M5009)2,3,4 Basic Local Area			UEP9D	UEPYP	2.23	108.35	70.57	54.24	11.70							
		2-Wire Voice Grade Port (Centrex/differ SWC /EBS-5209)2,3,4 Basic Local Area			UEP9D	UEPYQ	2.23	108.35	70.57	54.24	11.70							
		2-Wire Voice Grade Port (Centrex/differ SWC /EBS-M5112)2,3,4 Basic Local Area			UEP9D	UEPYR	2.23	108.35	70.57	54.24	11.70							
		2-Wire Voice Grade Port (Centrex/differ SWC /EBS-M5312)2,3,4 Basic Local Area			UEP9D	UEPYS	2.23	108.35	70.57	54.24	11.70							
		2-Wire Voice Grade Port (Centrex/differ SWC /EBS-M5008)2,3,4 Basic Local Area			UEP9D	UEPY4	2.23	108.35	70.57	54.24	11.70							
		2-Wire Voice Grade Port (Centrex/differ SWC /EBS-M5208)2, 3 Basic Local Area			UEP9D	UEPY5	2.23	108.35	70.57	54.24	11.70							
		2-Wire Voice Grade Port (Centrex/differ SWC /EBS-M5216)2,3,4 Basic Local Area			UEP9D	UEPY6	2.23	108.35	70.57	54.24	11.70							
		2-Wire Voice Grade Port (Centrex/differ SWC /EBS-M5316)2,3,4 Basic Local Area			UEP9D	UEPY7	2.23	108.35	70.57	54.24	11.70							
		2-Wire Voice Grade Port, Diff Serving Wire Center - 800 Service Term 2,3			UEP9D	UEPYZ	2.23	108.35	70.57	54.24	11.70							
		2-Wire Voice Grade Port terminated in on Megalink or equivalent Basic Local Area			UEP9D	UEPY9	2.23	40.31	19.84	24.90	6.58							
		2-Wire Voice Grade Port Terminated on 800 Service Term Basic Local Area			UEP9D	UEPY2	2.23	40.31	19.84	24.90	6.58							
	AL, KY, LA, MS, SC, & TN Only																	
		2-Wire Voice Grade Port (Centrex)			UEP9D	UEPQA	2.23	40.31	19.84	24.90	6.58							
		2-Wire Voice Grade Port (Centrex 800 termination)			UEP9D	UEPQB	2.23	40.31	19.84	24.90	6.58							
		2-Wire Voice Grade Port (Centrex / EBS-PSET)4			UEP9D	UEPQC	2.23	40.31	19.84	24.90	6.58							
		2-Wire Voice Grade Port (Centrex / EBS-M5009)4			UEP9D	UEPQD	2.23	40.31	19.84	24.90	6.58							
		2-Wire Voice Grade Port (Centrex / EBS-M5209)4			UEP9D	UEPQE	2.23	40.31	19.84	24.90	6.58							
		2-Wire Voice Grade Port (Centrex / EBS-M5112)4			UEP9D	UEPQF	2.23	40.31	19.84	24.90	6.58							
		2-Wire Voice Grade Port (Centrex / EBS-M5312)4			UEP9D	UEPQG	2.23	40.31	19.84	24.90	6.58							
		2-Wire Voice Grade Port (Centrex / EBS-M5008)4			UEP9D	UEPQT	2.23	40.31	19.84	24.90	6.58							
		2-Wire Voice Grade Port (Centrex / EBS-M5208)4			UEP9D	UEPQU	2.23	40.31	19.84	24.90	6.58							
		2-Wire Voice Grade Port (Centrex / EBS-M5216)4			UEP9D	UEPQV	2.23	40.31	19.84	24.90	6.58							
		2-Wire Voice Grade Port (Centrex / EBS-M5316)4			UEP9D	UEPQ3	2.23	40.31	19.84	24.90	6.58							
		2-Wire Voice Grade Port (Centrex with Caller ID)			UEP9D	UEPQH	2.23	40.31	19.84	24.90	6.58							
		2-Wire Voice Grade Port (Centrex/Caller ID/Msg Wtg Lamp Indication)4			UEP9D	UEPQW	2.23	40.31	19.84	24.90	6.58							
		2-Wire Voice Grade Port (Centrex/Msg Wtg Lamp Indication)4			UEP9D	UEPQJ	2.23	40.31	19.84	24.90	6.58							
		2-Wire Voice Grade Port (Centrex from diff Serving Wire Center) 2,3			UEP9D	UEPQM	2.23	108.35	70.57	54.24	11.70							
		2-Wire Voice Grade Port (Centrex/differ SWC /EBS-PSET)2,3,4			UEP9D	UEPQO	2.23	108.35	70.57	54.24	11.70							
		2-Wire Voice Grade Port (Centrex/differ SWC /EBS-M5009)2,3,4			UEP9D	UEPQP	2.23	108.35	70.57	54.24	11.70							

CATEGORY	RATE ELEMENTS	Interim	Zone	.	USOC	RATES ($)					Svc Order Submitted Elec per LSR	Svc Order Submitted Manually per LSR	Incremental Charge - Manual Svc Order vs. Electronic-1st	Incremental Charge - Manual Svc Order vs. Electronic-Add'l	Incremental Charge - Manual Svc Order vs. Electronic-Disc 1st	Incremental Charge - Manual Svc Order vs. Electronic-Disc Add'l
						Rec	Nonrecurring		Nonrecurring Disconnect		OSS Rates ($)					
							First	Add'l	First	Add'l	SOMEC	SOMAN	SOMAN	SOMAN	SOMAN	SOMAN
	2-Wire Voice Grade Port (Centrex/differ SWC /EBS-5209)2,3,4			UEP9D	UEPQQ	2.23	108.35	70.57	54.24	11.70						
	2-Wire Voice Grade Port (Centrex/differ SWC /EBS-M5112)2,3,4			UEP9D	UEPQR	2.23	108.35	70.57	54.24	11.70						
	2-Wire Voice Grade Port (Centrex/differ SWC /EBS-M5312)2,3,4			UEP9D	UEPQS	2.23	108.35	70.57	54.24	11.70						
	2-Wire Voice Grade Port (Centrex/differ SWC /EBS-M5008)2,3,4			UEP9D	UEPQ4	2.23	108.35	70.57	54.24	11.70						
	2-Wire Voice Grade Port (Centrex/differ SWC /EBS-M5208)2,3,4			UEP9D	UEPQ5	2.23	108.35	70.57	54.24	11.70						
	2-Wire Voice Grade Port (Centrex/differ SWC /EBS-M5216)2,3,4			UEP9D	UEPQ6	2.23	108.35	70.57	54.24	11.70						
	2-Wire Voice Grade Port (Centrex/differ SWC /EBS-M5316)2,3,4			UEP9D	UEPQ7	2.23	108.35	70.57	54.24	11.70						
	2-Wire Voice Grade Port, Diff Serving Wire Center - 800 Service Term 2,3			UEP9D	UEPQZ	2.23	108.35	70.57	54.24	11.70						
	2-Wire Voice Grade Port terminated in on Megalink or equivalent			UEP9D	UEPQ9	2.23	40.31	19.84	24.90	6.58						
	2-Wire Voice Grade Port Terminated on 800 Service Term			UEP9D	UEPQ2	2.23	40.31	19.84	24.90	6.58						
Local Switching																
	Centrex Intercom Funtionality, per port			UEP9D	URECS	0.7947										
Features																
	All Standard Features Offered, per port			UEP9D	UEPVF	2.56										
	All Select Features Offered, per port			UEP9D	UEPVS	0.00	404.98									
	All Centrex Control Features Offered, per port			UEP9D	UEPVC	2.56										
NARS																
	Unbundled Network Access Register - Combination			UEP9D	UARCX	0.00	0.00	0.00	0.00	0.00						
	Unbundled Network Access Register - Inward			UEP9D	UAR1X	0.00	0.00	0.00	0.00	0.00						
	Unbundled Network Access Register - Outdial			UEP9D	UAROX	0.00	0.00	0.00	0.00	0.00						
Miscellaneous Terminations																
2-Wire Trunk Side																
	Trunk Side Terminations, each			UEP9D	CEND6	8.25	120.00	18.85	61.77	3.88						
4-Wire Digital (1.544 Megabits)																
	DS1 Circuit Terminations, each			UEP9D	M1HD1	58.41	203.19	96.25	74.86	2.54						
	DS0 Channels Activiated per Channel			UEP9D	M1HDO	0.00	14.56									
Interoffice Channel Mileage - 2-Wire																
	Interoffice Channel Facilities Termination			UEP9D	M1GBC	22.52	40.77	27.57	17.26	7.11						
	Interoffice Channel mileage, per mile or fraction of mile			UEP9D	M1GBM	0.0098										
Feature Activations (DS0) Centrex Loops on Channelized DS1 Service																
D4 Channel Bank Feature Activations																
	Feature Activation on D-4 Channel Bank Centrex Loop Slot			UEP9D	1PQWS	0.57										
	Feature Activation on D-4 Channel Bank FX line Side Loop Slot			UEP9D	1PQW6	0.57										
	Feature Activation on D-4 Channel Bank FX Trunk Side Loop Slot			UEP9D	1PQW7	0.57										
	Feature Activation on D-4 Channel Bank Centrex Loop Slot - Different Wire Center			UEP9D	1PQWP	0.57										
	Feature Activation on D-4 Channel Bank Private Line Loop Slot			UEP9D	1PQWV	0.57										
	Feature Activation on D-4 Channel Bank Tjie Line/Trunk Loop Slot			UEP9D	1PQWQ	0.57										
	Feature Activation on D-4 Channel Bank WATS Loop Slot			UEP9D	1PQWA	0.57										
Non-Recurring Charges (NRC) Associated with UNE-P Centrex																
	NRC Conversion Currently Combined Switch-As-Is with allowed changes, per port			UEP9D	USAC2		0.10	0.10								
	Conversion of existing Centrex Common Block, each			UEP9D	USACN		37.97	16.68								
	New Centrex Standard Common Block			UEP9D	M1ACS	0.00	666.32									
	New Centrex Customized Common Block			UEP9D	M1ACC	0.00	666.32									
	NAR Establishment Charge, Per Occasion			UEP9D	URECA	0.00	72.63									
Additional Non-Recurring Charges (NRC)																
	Unbundled Miscellaneous Rate Element, Tag Loop at End Use Premise			UEP9D	URETL		8.33	0.83								
	Unbundled Miscellaneous Rate Element, Tag Design Loop at End Use Premise			UEP9D	URETN		11.19	1.10								

UNBUNDLED NETWORK ELEMENTS - Mississippi

Attachment: 2 Ex. A

CATEGORY	RATE ELEMENTS	Interim	Zone	.	USOC	RATES ($)					Svc Order Submitted Elec per LSR	Svc Order Submitted Manually per LSR	Incremental Charge - Manual Svc Order vs. Electronic-1st	Incremental Charge - Manual Svc Order vs. Electronic-Add'l	Incremental Charge - Manual Svc Order vs. Electronic-Disc 1st	Incremental Charge - Manual Svc Order vs. Electronic-Disc Add'l
						Rec	Nonrecurring		Nonrecurring Disconnect		OSS Rates ($)					
							First	Add'l	First	Add'l	SOMEC	SOMAN	SOMAN	SOMAN	SOMAN	SOMAN
	UNE-P CENTREX - EWSD (Valid in AL, FL, KY, LA, MS & TN)															
	2-Wire VG Loop/2-Wire Voice Grade Port (Centrex) Combo															
	UNE Port/Loop Combination Rates (Non-Design)															
	2-Wire VG Loop/2-Wire Voice Grade Port (Centrex) Port Combo - Non-Design					13.22										
	2-Wire VG Loop/2-Wire Voice Grade Port (Centrex)Port Combo - Non-Design					18.13										
	2-Wire VG Loop/2-Wire Voice Grade Port (Centrex)Port Combo - Non-Design					27.26										
	2-Wire VG Loop/2-Wire Voice Grade Port (Centrex) Port Combo - Non-Design					45.91										
	UNE Port/Loop Combination Rates (Design)															
	2-Wire VG Loop/2-Wire Voice Grade Port (Centrex) Port Combo - Design					16.12										
	2-Wire VG Loop/2-Wire Voice Grade Port (Centrex)Port Combo - Design					20.98										
	2-Wire VG Loop/2-Wire Voice Grade Port (Centrex)Port Combo - Design					29.78										
	2-Wire VG Loop/2-Wire Voice Grade Port (Centrex) Port Combo - Design					47.95										
	UNE Loop Rate															
	2-Wire Voice Grade Loop (SL 1) - Zone 1		1	UEP9E	UECS1	10.98										
	2-Wire Voice Grade Loop (SL 1) - Zone 2		2	UEP9E	UECS1	15.91										
	2-Wire Voice Grade Loop (SL 1) - Zone 3		3	UEP9E	UECS1	25.04										
	2-Wire Voice Grade Loop (SL 1) - Zone 4		4	UEP9E	UECS1	43.68										
	2-Wire Voice Grade Loop (SL 2) - Zone 1		1	UEP9E	UECS2	13.89										
	2-Wire Voice Grade Loop (SL 2) - Zone 2		2	UEP9E	UECS2	18.75										
	2-Wire Voice Grade Loop (SL 2) - Zone 3		3	UEP9E	UECS2	27.55										
	2-Wire Voice Grade Loop (SL 2) - Zone 4		4	UEP9E	UECS2	45.72										
	UNE Port Rate															
	AL, FL, KY, LA, MS, & TN only															
	2-Wire Voice Grade Port (Centrex) Basic Local Area			UEP9E	UEPYA	2.23	40.31	19.84	24.90	6.58						
	2-Wire Voice Grade Port (Centrex 800 termination)Basic Local Area			UEP9E	UEPYB	2.23	40.31	19.84	24.90	6.58						
	2-Wire Voice Grade Port (Centrex with Caller ID)1Basic Local Area			UEP9E	UEPYH	2.23	40.31	19.84	24.90	6.58						
	2-Wire Voice Grade Port (Centrex from diff Serving Wire Center)2,3 Basic Local Area			UEP9E	UEPYM	2.23	108.35	70.57	54.24	11.70						
	2-Wire Voice Grade Port, Diff Serving Wire Center 2,3 - 800 Service Term - Basic Local Area			UEP9E	UEPYZ	2.23	108.35	70.57	54.24	11.70						
	2-Wire Voice Grade Port terminated in on Megalink or equivalent - Basic Local Area			UEP9E	UEPY9	2.23	40.31	19.84	24.90	6.58						
	2-Wire Voice Grade Port Terminated on 800 Service Term - Basic Local Area			UEP9E	UEPY2	2.23	40.31	19.84	24.90	6.58						
	AL, KY, LA, MS, & TN Only															
	2-Wire Voice Grade Port (Centrex)			UEP9E	UEPQA	2.23	40.31	19.84	24.90	6.58						
	2-Wire Voice Grade Port (Centrex 800 termination)			UEP9E	UEPQB	2.23	40.31	19.84	24.90	6.58						
	2-Wire Voice Grade Port (Centrex with Caller ID)1			UEP9E	UEPQH	2.23	40.31	19.84	24.90	6.58						
	2-Wire Voice Grade Port (Centrex from diff Serving Wire Center)2,3			UEP9E	UEPQM	2.23	108.35	70.57	54.24	11.70						
	2-Wire Voice Grade Port, Diff Serving Wire Center 2,3 - 800 Service Term			UEP9E	UEPQZ	2.23	108.35	70.57	54.24	11.70						
	2-Wire Voice Grade Port terminated in on Megalink or equivalent			UEP9E	UEPQ9	2.23	40.31	19.84	24.90	6.58						
	2-Wire Voice Grade Port Terminated on 800 Service Term			UEP9E	UEPQ2	2.23	40.31	19.84	24.90	6.58						
	Local Switching															
	Centrex Intercom Funtionality, per port			UEP9E	URECS	0.7947										
	Features															
	All Standard Features Offered, per port			UEP9E	UEPVF	2.56										
	All Select Features Offered, per port			UEP9E	UEPVS	0.00	404.98									
	All Centrex Control Features Offered, per port			UEP9E	UEPVC	2.56										
	NARS															
	Unbundled Network Access Register - Combination			UEP9E	UARCX	0.00	0.00	0.00	0.00	0.00						
	Unbundled Network Access Register - Indial			UEP9E	UAR1X	0.00	0.00	0.00	0.00	0.00						

CATEGORY	RATE ELEMENTS	Interim	Zone	.	USOC	RATES ($)					Svc Order Submitted Elec per LSR	Svc Order Submitted Manually per LSR	Incremental Charge - Manual Svc Order vs. Electronic-1st	Incremental Charge - Manual Svc Order vs. Electronic-Add'l	Incremental Charge - Manual Svc Order vs. Electronic-Disc 1st	Incremental Charge - Manual Svc Order vs. Electronic-Disc Add'l
						Rec	Nonrecurring		Nonrecurring Disconnect		OSS Rates ($)					
							First	Add'l	First	Add'l	SOMEC	SOMAN	SOMAN	SOMAN	SOMAN	SOMAN
	Unbundled Network Access Register - Outdial			UEP9E	UAROX	0.00	0.00	0.00	0.00	0.00						
Miscellaneous Terminations																
2-Wire Trunk Side																
	Trunk Side Terminations, each			UEP9E	CEND6	8.25	120.00	18.85	61.77	3.88						
4-Wire Digital (1.544 Megabits)																
	DS1 Circuit Terminations, each			UEP9E	M1HD1	58.41	203.19	96.25	74.86	2.54						
	DS0 Channel Activated Per Channel			UEP9E	M1HDO	0.00	14.56									
Interoffice Channel Mileage - 2-Wire																
	Interoffice Channel Facilities Termination			UEP9E	M1GBC	22.52	40.77	27.57	17.26	7.11						
	Interoffice Channel mileage, per mile or fraction of mile			UEP9E	M1GBM	0.0098										
Feature Activations (DS0) Centrex Loops on Channelized DS1 Service																
D4 Channel Bank Feature Activations																
	Feature Activation on D-4 Channel Bank Centrex Loop Slot			UEP9E	1PQWS	0.57										
	Feature Activation on D-4 Channel Bank FX line Side Loop Slot			UEP9E	1PQW6	0.57										
	Feature Activation on D-4 Channel Bank FX Trunk Side Loop Slot			UEP9E	1PQW7	0.57										
	Feature Activation on D-4 Channel Bank Centrex Loop Slot - Different Wire Center			UEP9E	1PQWP	0.57										
	Feature Activation on D-4 Channel Bank Private Line Loop Slot			UEP9E	1PQWV	0.57										
	Feature Activation on D-4 Channel Bank Tjie Line/Trunk Loop Slot			UEP9E	1PQWQ	0.57										
	Feature Activation on D-4 Channel Bank WATS Loop Slot			UEP9E	1PQWA	0.57										
Non-Recurring Charges (NRC) Associated with UNE-P Centrex																
	NRC Conversion Currently Combined Switch-As-Is with allowed changes, per port			UEP9E	USAC2		0.10	0.10								
	Conversion of Existing Centrex Common Block, each			UEP9E	USACN		37.97	16.68								
	New Centrex Standard Common Block			UEP9E	M1ACS	0.00	666.32									
	New Centrex Customized Common Block			UEP9E	M1ACC	0.00	666.32									
	NAR Establishment Charge, Per Occasion			UEP9E	URECA	0.00	72.63									
Additional Non-Recurring Charges (NRC)																
	Unbundled Miscellaneous Rate Element, Tag Loop at End Use Premise			UEP9E	URETL		8.33	0.83								
	Unbundled Miscellaneous Rate Element, Tag Design Loop at End Use Premise			UEP9E	URETN		11.19	1.10								
UNE-P CENTREX - DCO - Valid in AL, KY, LA, MS, & TN)																
2-Wire VG Loop/2-Wire Voice Grade Port (Centrex) Combo																
UNE Port/Loop Combination Rates (Non-Design)																
	2-Wire VG Loop/2-Wire Voice Grade Port (Centrex) Port Combo - Non-Design					13.22										
	2-Wire VG Loop/2-Wire Voice Grade Port (Centrex)Port Combo - Non-Design					18.13										
	2-Wire VG Loop/2-Wire Voice Grade Port (Centrex)Port Combo - Non-Design					27.26										
	2-Wire VG Loop/2-Wire Voice Grade Port (Centrex) Port Combo - Non-Design					45.91										
UNE Port/Loop Combination Rates (Design)																
	2-Wire VG Loop/2-Wire Voice Grade Port (Centrex) Port Combo - Design					16.12										
	2-Wire VG Loop/2-Wire Voice Grade Port (Centrex)Port Combo - Design					20.98										
	2-Wire VG Loop/2-Wire Voice Grade Port (Centrex)Port Combo - Design					29.78										
	2-Wire VG Loop/2-Wire Voice Grade Port (Centrex) Port Combo - Design					47.95										
UNE Loop Rate																
	2-Wire Voice Grade Loop (SL 1) - Zone 1		1	UEP93	UECS1	10.98										
	2-Wire Voice Grade Loop (SL 1) - Zone 2		2	UEP93	UECS1	15.91										
	2-Wire Voice Grade Loop (SL 1) - Zone 3		3	UEP93	UECS1	25.04										
	2-Wire Voice Grade Loop (SL 1) - Zone 4		4	UEP93	UECS1	43.68										
	2-Wire Voice Grade Loop (SL 2) - Zone 1		1	UEP93	UECS2	13.89										
	2-Wire Voice Grade Loop (SL 2) - Zone 2		2	UEP93	UECS2	18.75										
	2-Wire Voice Grade Loop (SL 2) - Zone 3		3	UEP93	UECS2	27.55										

UNBUNDLED NETWORK ELEMENTS - Mississippi

Attachment: 2 Ex. A

CATEGORY	RATE ELEMENTS	Interim	Zone	.	USOC	RATES ($) Rec	Nonrecurring First	Nonrecurring Add'l	Nonrecurring Disconnect First	Nonrecurring Disconnect Add'l	Svc Order Submitted Elec per LSR	Svc Order Submitted Manually per LSR	Incremental Charge - Manual Svc Order vs. Electronic-1st	Incremental Charge - Manual Svc Order vs. Electronic-Add'l	Incremental Charge - Manual Svc Order vs. Electronic-Disc 1st	Incremental Charge - Manual Svc Order vs. Electronic-Disc Add'l
											OSS Rates ($)					
							First	Add'l	First	Add'l	SOMEC	SOMAN	SOMAN	SOMAN	SOMAN	SOMAN
	2-Wire Voice Grade Loop (SL 2) - Zone 4		4	UEP93	UECS2	45.72										
	UNE Port Rate															
	AL, KY, LA, MS, & TN only															
	2-Wire Voice Grade Port (Centrex) Basic Local Area			UEP93	UEPYA	2.23	40.31	19.84	24.90	6.58						
	2-Wire Voice Grade Port (Centrex 800 termination)Basic Local Area			UEP93	UEPYB	2.23	40.31	19.84	24.90	6.58						
	2-Wire Voice Grade Port (Centrex with Caller ID)1Basic Local Area			UEP93	UEPYH	2.23	40.31	19.84	24.90	6.58						
	2-Wire Voice Grade Port (Centrex from diff Serving Wire Center)2,3 Basic Local Area			UEP93	UEPYM	2.23	108.35	70.57	54.24	11.70						
	2-Wire Voice Grade Port, Diff Serving Wire Center - 2,3 - 800 Service Term - Basic Local Area			UEP93	UEPYZ	2.23	108.35	70.57	54.24	11.70						
	2-Wire Voice Grade Port terminated in on Megalink or equivalent - Basic Local Area			UEP93	UEPY9	2.23	40.31	19.84	24.90	6.58						
	2-Wire Voice Grade Port Terminated on 800 Service Term - Basic Local Area			UEP93	UEPY2	2.23	40.31	19.84	24.90	6.58						
	2-Wire Voice Grade Port (Centrex)			UEP93	UEPQA	2.23	40.31	19.84	24.90	6.58						
	2-Wire Voice Grade Port (Centrex 800 termination)			UEP93	UEPQB	2.23	40.31	19.84	24.90	6.58						
	2-Wire Voice Grade Port (Centrex with Caller ID)1			UEP93	UEPQH	2.23	40.31	19.84	24.90	6.58						
	2-Wire Voice Grade Port (Centrex from diff Serving Wire Center)2,3			UEP93	UEPQM	2.23	108.35	70.57	54.24	11.70						
	2-Wire Voice Grade Port, Diff Serving Wire Center - 2,3 -800 Service Term			UEP93	UEPQZ	2.23	108.35	70.57	54.24	11.70						
	2-Wire Voice Grade Port terminated in on Megalink or equivalent			UEP93	UEPQ9	2.23	40.31	19.84	24.90	6.58						
	2-Wire Voice Grade Port Terminated on 800 Service Term			UEP93	UEPQ2	2.23	40.31	19.84	24.90	6.58						
	Local Switching															
	Centrex Intercom Funtionality, per port			UEP93	URECS	0.7947										
	Features															
	All Standard Features Offered, per port			UEP93	UEPVF	2.56										
	All Centrex Control Features Offered, per port			UEP93	UEPVC	2.56										
	NARS															
	Unbundled Network Access Register - Combination			UEP93	UARCX	0.00	0.00	0.00	0.00	0.00						
	Unbundled Network Access Register - Indial			UEP93	UAR1X	0.00	0.00	0.00	0.00	0.00						
	Unbundled Network Access Register - Outdial			UEP93	UAROX	0.00	0.00	0.00	0.00	0.00						
	Miscellaneous Terminations															
	2-Wire Trunk Side															
	Trunk Side Terminations, each			UEP93	CEND6	8.25	120.00	18.85	61.77	3.88						
	4-Wire Digital (1.544 Megabits)															
	DS1 Circuit Terminations, each			UEP93	M1HD1	58.41	203.19	96.25	74.86	2.54						
	DS0 Channels Activated, Per Channel			UEP93	M1HDO	0.00	14.56									
	Interoffice Channel Mileage - 2-Wire															
	Interoffice Channel Facilities Termination			UEP93	M1GBC	22.52	40.77	27.57	17.26	7.11						
	Interoffice Channel mileage, per mile or fraction of mile			UEP93	M1GBM	0.0098										
	Feature Activations (DS0) Centrex Loops on Channelized DS1 Service															
	D4 Channel Bank Feature Activations															
	Feature Activation on D-4 Channel Bank Centrex Loop Slot			UEP93	1PQWS	0.57										
	Feature Activation on D-4 Channel Bank FX Line Side Loop Slot			UEP93	1PQW6	0.57										
	Feature Activation on D-4 Channel Bank FX Trunk Side Loop Slot			UEP93	1PQW7	0.57										
	Feature Activation on D-4 Channel Bank Centrex Loop Slot - Different Wire Center			UEP93	1PQWP	0.57										
	Feature Activation on D-4 Channel Bank Private Line Loop Slot			UEP93	1PQWV	0.57										
	Feature Activation on D-4 Channel Bank Tie Line/Trunk Loop Slot			UEP93	1PQWQ	0.57										
	Feature Activation on D-4 Channel Bank WATS Loop Slot			UEP93	1PQWA	0.57										
	Non-Recurring Charges (NRC) Associated with UNE-P Centrex															
	NRC Conversion Currently Combined Switch-As-Is with allowed changes, per port			UEP93	USAC2		0.10	0.10								
	Conversion of Existing Centrex Common Block, each			UEP93	USACN		37.97	16.68								
	New Centrex Standard Common Block			UEP93	M1ACS	0.00	666.32									
	New Centrex Customized Common Block			UEP93	M1ACC	0.00	666.32									

UNBUNDLED NETWORK ELEMENTS - Mississippi														Attachment: 2 Ex. A				
CATEGORY	RATE ELEMENTS	Interim	Zone	.	USOC	RATES ($)					Svc Order Submitted Elec per LSR	Svc Order Submitted Manually per LSR	Incremental Charge - Manual Svc Order vs. Electronic-1st	Incremental Charge - Manual Svc Order vs. Electronic-Add'l	Incremental Charge - Manual Svc Order vs. Electronic-Disc 1st	Incremental Charge - Manual Svc Order vs. Electronic-Disc Add'l	
						Rec	Nonrecurring		Nonrecurring Disconnect		OSS Rates ($)						
							First	Add'l	First	Add'l	SOMEC	SOMAN	SOMAN	SOMAN	SOMAN	SOMAN	
	NAR Establishment Charge, Per Occasion			UEP93	URECA	0.00	72.63										
	Additional Non-Recurring Charges (NRC)																
	Unbundled Miscellaneous Rate Element, Tag Loop at End Use Premise			UEP93	URETL		8.33	0.83									
	Unbundled Miscellaneous Rate Element, Tag Design Loop at End Use Premise			UEP93	URETN		11.19	1.10									
	Note 1 - Required Port for Centrex Control in 1AESS, 5ESS & EWSD																
	Note 2 - Requres Interoffice Channel Mileage																
	Note 3 - Installation is combination of Installation charge for SL2 Loop and Port																
	Note 4 - Requires Specific Customer Premises Equipment																
	Note: Rates displaying an "I" in Interim column are interim as a result of a Commission order.																

UNBUNDLED NETWORK ELEMENTS - North Carolina

Attachment: 2 Ex. A

CATEGORY	RATE ELEMENTS	Interim	Zone	BCS	USOC	RATES ($)					Svc Order Submitted Elec per LSR	Svc Order Submitted Manually per LSR	Incremental Charge - Manual Svc Order vs. Electronic-1st	Incremental Charge - Manual Svc Order vs. Electronic-Add'l	Incremental Charge - Manual Svc Order vs. Electronic-Disc 1st	Incremental Charge - Manual Svc Order vs. Electronic-Disc Add'l
						Rec	Nonrecurring		Nonrecurring Disconnect		OSS Rates ($)					
							First	Add'l	First	Add'l	SOMEC	SOMAN	SOMAN	SOMAN	SOMAN	SOMAN
	The "Zone" shown in the sections for stand-alone loops or loops as part of a combination refers to Geographically Deaveraged UNE Zones. To view Geographically Deaveraged UNE Zone Designations by Central Office, refer to internet Website: http://www.interconnection.bellsouth.com/become_a_clec/html/interconnection.htm															
OPERATIONAL SUPPORT SYSTEMS (OSS) - "REGIONAL RATES"																
	NOTE: (1) CLEC should contact its contract negotiator if it prefers the "state specific" OSS charges as ordered by the State Commissions. The OSS charges currently contained in this rate exhibit are the BellSouth "regional" service ordering charges. CLEC may elect either the state specific Commission ordered rates for the service ordering charges, or CLEC may elect the regional service ordering charge, however, CLEC can not obtain a mixture of the two regardless if CLEC has a interconnection contract established in each of the 9 states.															
	NOTE: (2) Any element that can be ordered electronically will be billed according to the SOMEC rate listed in this category. Please refer to BellSouth's Local Ordering Handbook (LOH) to determine if a product can be ordered electronically. For those elements that cannot be ordered electronically at present per the LOH, the listed SOMEC rate in this category reflects the charge that would be billed to a CLEC once electronic ordering capabilities come on-line for that element. Otherwise, the manual ordering charge, SOMAN, will be applied to a CLECs bill when it submits an LSR to BellSouth.															
	OSS - Electronic Service Order Charge, Per Local Service Request (LSR) - UNE Only				SOMEC		3.50	0.00	3.50	0.00						
	OSS - Manual Service Order Charge, Per Local Service Request (LSR) - UNE Only				SOMAN		15.20	0.00	15.20	0.00						
UNE SERVICE DATE ADVANCEMENT CHARGE																
	NOTE: The Expedite charge will be maintained commensurate with BellSouth's FCC No.1 Tariff, Section 5 as applicable.															
	UNE Expedite Charge per Circuit or Line Assignable USOC, per Day			UAL, UEANL, UCL, UEF, UDF, UEQ, UDL, UENTW, UDN, UEA, UHL, ULC, USL, U1T12, U1T48, U1TD1, U1TD3, U1TDX, U1TO3, U1TS1, U1TVX, UC1BC, UC1BL, UC1CC, UC1CL, UC1DC, UC1DL, UC1EC, UC1EL, UC1FC, UC1FL, UC1GC, UC1GL, UC1HC, UC1HL, UDL12, UDL48, UDLO3, UDLSX, UE3, ULD12, ULD48, ULDD1, ULDD3, ULDDX, ULDO3, ULDS1, ULDVX, UNC1X, UNC3X, UNCDX, UNCNX, UNCSX, UNCVX, UNLD1, UNLD3, UXTD1, UXTD3, UXTS1, U1TUC, U1TUD, U1TUB, U1TUA	SDASP		200.00									
ORDER MODIFICATION CHARGE																
	Order Modification Charge (OMC)						26.21	0.00	0.00	0.00						
	Order Modification Additional Dispatch Charge (OMCAD)						0.00	0.00	0.00	0.00						
UNBUNDLED EXCHANGE ACCESS LOOP																
	2-WIRE ANALOG VOICE GRADE LOOP															
	2-Wire Analog Voice Grade Loop - Service Level 1- Zone 1		1	UEANL	UEAL2	12.11	57.99	42.37								
	2-Wire Analog Voice Grade Loop - Service Level 1- Zone 2		2	UEANL	UEAL2	21.24	57.99	42.37								
	2-Wire Analog Voice Grade Loop - Service Level 1- Zone 3		3	UEANL	UEAL2	33.65	57.99	42.37								
	2-Wire Analog Voice Grade Loop - Service Level 1- Zone 1		1	UEANL	UEASL	12.11	57.99	42.37								
	2-Wire Analog Voice Grade Loop - Service Level 1- Zone 2		2	UEANL	UEASL	21.24	57.99	42.37								
	2-Wire Analog Voice Grade Loop - Service Level 1- Zone 3		3	UEANL	UEASL	33.65	57.99	42.37								
	Unbundled Miscellaneous Rate Element, Tag Loop at End User Premise			UEANL	URETL		8.33	0.83								
	Loop Testing - Basic 1st Half Hour			UEANL	URET1		76.24	76.24								
	Loop Testing - Basic Additional Half Hour			UEANL	URETA		39.51	39.51								
	CLEC to CLEC Conversion Charge Without Outside Dispatch (UVL-SL1)			UEANL	UREWO		15.76	8.93								

UNBUNDLED NETWORK ELEMENTS - North Carolina

Attachment: 2 Ex. A

CATEGORY	RATE ELEMENTS	Interim	Zone	BCS	USOC	RATES ($)					Svc Order Submitted Elec per LSR	Svc Order Submitted Manually per LSR	Incremental Charge - Manual Svc Order vs. Electronic-1st	Incremental Charge - Manual Svc Order vs. Electronic-Add'l	Incremental Charge - Manual Svc Order vs. Electronic-Disc 1st	Incremental Charge - Manual Svc Order vs. Electronic-Disc Add'l
						Rec	Nonrecurring		Nonrecurring Disconnect		OSS Rates ($)					
							First	Add'l	First	Add'l	SOMEC	SOMAN	SOMAN	SOMAN	SOMAN	SOMAN
	Unbundled Voice Loop, Non-Design Voice Loop, billing for BST providing make-up (Engineering Information - E.I.)			UEANL	UEANM		28.74	28.74								
	Manual Order Coordination for UVL-SL1s (per loop)			UEANL	UEAMC		61.38	61.38								
	Order Coordination for Specified Conversion Time for UVL-SL1 (per LSR)			UEANL	OCOSL		45.34	45.34								
2-WIRE Unbundled COPPER LOOP																
	2-Wire Unbundled Copper Loop - Non-Designed Zone 1		1	UEQ	UEQ2X	10.16	35.27	15.60								
	2 Wire Unbundled Copper Loop - Non-Designed - Zone 2		2	UEQ	UEQ2X	17.55	35.27	15.60								
	2 Wire Unbundled Copper Loop - Non-Designed - Zone 3		3	UEQ	UEQ2X	27.58	35.27	15.60								
	Unbundled Miscellaneous Rate Element, Tag Loop at End User Premise			UEQ	URETL		8.33	0.83								
	Manual Order Coordination 2 Wire Unbundled Copper Loop - Non-Designed (per loop)			UEQ	USBMC		61.38	61.38								
	Unbundled Copper Loop, Non-Design Copper Loop, billing for BST providing make-up (Engineering Information - E.I.)			UEQ	UEQMU		28.74	28.74								
	Loop Testing - Basic 1st Half Hour			UEQ	URET1		76.24	76.24								
	Loop Testing - Basic Additional Half Hour			UEQ	URETA		39.51	39.51								
	CLEC to CLEC Conversion Charge Without Outside Dispatch (UCL-ND)			UEQ	UREWO		14.26	7.42								
UNBUNDLED EXCHANGE ACCESS LOOP																
2-WIRE ANALOG VOICE GRADE LOOP																
	2 Wire Analog Voice Grade Loop-Service Level 1-Line Splitting-Zone 1		1	UEPSR UEPSB	UEALS	12.11	57.99	42.37	0.00	0.00						
	2 Wire Analog Voice Grade Loop-Service Level 1-Line Splitting-Zone 1		1	UEPSR UEPSB	UEABS	12.11	57.99	42.37	0.00	0.00						
	2 Wire Analog Voice Grade Loop- Service Level 1-Line Splitting-Zone 2		2	UEPSR UEPSB	UEALS	21.24	57.99	42.37	0.00	0.00						
	2 Wire Analog Voice Grade Loop- Service Level 1-Line Splitting-Zone 2		2	UEPSR UEPSB	UEABS	21.24	57.99	42.37	0.00	0.00						
	2 Wire Analog Voice Grade Loop-Service Level 1-Line Splitting-Zone 3		3	UEPSR UEPSB	UEALS	33.65	57.99	42.37	0.00	0.00						
	2 Wire Analog Voice Grade Loop-Service Level 1-Line Splitting-Zone 3		3	UEPSR UEPSB	UEABS	33.65	57.99	42.37	0.00	0.00						
UNBUNDLED EXCHANGE ACCESS LOOP																
2-WIRE ANALOG VOICE GRADE LOOP																
	2-Wire Analog Voice Grade Loop - Service Level 2 w/Loop or Ground Start Signaling - Zone 1		1	UEA	UEAL2	14.97	142.97	106.56								
	2-Wire Analog Voice Grade Loop - Service Level 2 w/Loop or Ground Start Signaling - Zone 2		2	UEA	UEAL2	25.93	142.97	106.56								
	2-Wire Analog Voice Grade Loop - Service Level 2 w/Loop or Ground Start Signaling - Zone 3		3	UEA	UEAL2	40.81	142.97	106.56								
	Order Coordination for Specified Conversion Time (per LSR)			UEA	OCOSL		45.34									
	2-Wire Analog Voice Grade Loop - Service Level 2 w/Reverse Battery Signaling - Zone 1		1	UEA	UEAR2	14.97	142.97	106.56								
	2-Wire Analog Voice Grade Loop - Service Level 2 w/Reverse Battery Signaling - Zone 2		2	UEA	UEAR2	25.93	142.97	106.56								
	2-Wire Analog Voice Grade Loop - Service Level 2 w/Reverse Battery Signaling - Zone 3		3	UEA	UEAR2	40.81	142.97	106.56								
	Order Coordination for Specified Conversion Time (per LSR)			UEA	OCOSL		45.34									
	CLEC to CLEC Conversion Charge without outside dispatch			UEA	UREWO		87.64	36.33								
	Loop Tagging - Service Level 2 (SL2)			UEA	URETL		11.20	1.10								
4-WIRE ANALOG VOICE GRADE LOOP																
	4-Wire Analog Voice Grade Loop - Zone 1		1	UEA	UEAL4	21.32	288.47	237.45								
	4-Wire Analog Voice Grade Loop - Zone 2		2	UEA	UEAL4	36.27	288.47	237.45								
	4-Wire Analog Voice Grade Loop - Zone 3		3	UEA	UEAL4	56.57	288.47	237.45								
	Order Coordination for Specified Conversion Time (per LSR)			UEA	OCOSL		45.34									
	CLEC to CLEC Conversion Charge without outside dispatch			UEA	UREWO		87.64	36.33								
2-WIRE ISDN DIGITAL GRADE LOOP																
	2-Wire ISDN Digital Grade Loop - Zone 1		1	UDN	U1L2X	19.42	325.91	251.31								
	2-Wire ISDN Digital Grade Loop - Zone 2		2	UDN	U1L2X	32.88	325.91	251.31								
	2-Wire ISDN Digital Grade Loop - Zone 3		3	UDN	U1L2X	51.14	325.91	251.31								
	Order Coordination For Specified Conversion Time (per LSR)			UDN	OCOSL		45.34									
	CLEC to CLEC Conversion Charge without outside dispatch			UDN	UREWO		91.55	44.12								
2-WIRE ASYMMETRICAL DIGITAL SUBSCRIBER LINE (ADSL) COMPATIBLE LOOP																

UNBUNDLED NETWORK ELEMENTS - North Carolina

Attachment: 2 Ex. A

CATEGORY	RATE ELEMENTS	Interim	Zone	BCS	USOC	RATES ($)					Svc Order Submitted Elec per LSR	Svc Order Submitted Manually per LSR	Incremental Charge - Manual Svc Order vs. Electronic-1st	Incremental Charge - Manual Svc Order vs. Electronic-Add'l	Incremental Charge - Manual Svc Order vs. Electronic-Disc 1st	Incremental Charge - Manual Svc Order vs. Electronic-Disc Add'l
						Rec	Nonrecurring		Nonrecurring Disconnect		OSS Rates ($)					
							First	Add'l	First	Add'l	SOMEC	SOMAN	SOMAN	SOMAN	SOMAN	SOMAN
	2 Wire Unbundled ADSL Loop including manual service inquiry & facility reservation - Zone 1		1	UAL	UAL2X	11.00	264.71	145.60								
	2 Wire Unbundled ADSL Loop including manual service inquiry & facility reservation - Zone 2		2	UAL	UAL2X	18.39	264.71	145.60								
	2 Wire Unbundled ADSL Loop including manual service inquiry & facility reservation - Zone 3		3	UAL	UAL2X	28.42	264.71	145.60								
	Order Coordination for Specified Conversion Time (per LSR)			UAL	OCOSL		45.34									
	2 Wire Unbundled ADSL Loop without manual service inquiry & facility reservaton - Zone 1		1	UAL	UAL2W	11.00	190.25	114.82								
	2 Wire Unbundled ADSL Loop without manual service inquiry & facility reservaton - Zone 2		2	UAL	UAL2W	18.39	190.25	114.82								
	2 Wire Unbundled ADSL Loop without manual service inquiry & facility reservaton - Zone 3		3	UAL	UAL2W	28.42	190.25	114.82								
	Order Coordination for Specified Conversion Time (per LSR)			UAL	OCOSL		45.34									
	CLEC to CLEC Conversion Charge without outside dispatch			UAL	UREWO		86.12	40.36								
	2-WIRE HIGH BIT RATE DIGITAL SUBSCRIBER LINE (HDSL) COMPATIBLE LOOP															
	2 Wire Unbundled HDSL Loop including manual service inquiry & facility reservation - Zone 1		1	UHL	UHL2X	9.01	284.74	163.54								
	2 Wire Unbundled HDSL Loop including manual service inquiry & facility reservation - Zone 2		2	UHL	UHL2X	14.87	284.74	163.54								
	2 Wire Unbundled HDSL Loop including manual service inquiry & facility reservation - Zone 3		3	UHL	UHL2X	22.82	284.74	163.54								
	Order Coordination for Specified Conversion Time (per LSR)			UHL	OCOSL		45.34									
	2 Wire Unbundled HDSL Loop without manual service inquiry and facility reservation - Zone 1		1	UHL	UHL2W	9.01	207.48	132.05								
	2 Wire Unbundled HDSL Loop without manual service inquiry and facility reservation - Zone 2		2	UHL	UHL2W	14.87	207.48	132.05								
	2 Wire Unbundled HDSL Loop without manual service inquiry and facility reservation - Zone 3		3	UHL	UHL2W	22.82	207.48	132.05								
	Order Coordination for Specified Conversion Time (per LSR)			UHL	OCOSL		45.34									
	CLEC to CLEC Conversion Charge without outside dispatch			UHL	UREWO		86.06	40.36								
	4-WIRE HIGH BIT RATE DIGITAL SUBSCRIBER LINE (HDSL) COMPATIBLE LOOP															
	4 Wire Unbundled HDSL Loop including manual service inquiry and facility reservation - Zone 1		1	UHL	UHL4X	10.62	341.65	220.45								
	4-Wire Unbundled HDSL Loop including manual service inquiry and facility reservation - Zone 2		2	UHL	UHL4X	17.67	341.65	220.45								
	4-Wire Unbundled HDSL Loop including manual service inquiry and facility reservation - Zone 3		3	UHL	UHL4X	27.24	341.65	220.45								
	Order Coordination for Specified Conversion Time (per LSR)			UHL	OCOSL		45.34									
	4-Wire Unbundled HDSL Loop without manual service inquiry and facility reservation - Zone 1		1	UHL	UHL4W	10.62	264.39	188.96								
	4-Wire Unbundled HDSL Loop without manual service inquiry and facility reservation - Zone 2		2	UHL	UHL4W	17.67	264.39	188.96								
	4-Wire Unbundled HDSL Loop without manual service inquiry and facility reservation - Zone 3		3	UHL	UHL4W	27.24	264.39	188.96								
	Order Coordination for Specified Conversion Time (per LSR)			UHL	OCOSL		45.34									
	CLEC to CLEC Conversion Charge without outside dispatch			UHL	UREWO		86.06	40.36								
	4-WIRE DS1 DIGITAL LOOP															
	4-Wire DS1 Digital Loop - Zone 1		1	USL	USLXX	47.60	714.84	421.47								
	4-Wire DS1 Digital Loop - Zone 2		2	USL	USLXX	84.36	714.84	421.47								
	4-Wire DS1 Digital Loop - Zone 3		3	USL	USLXX	134.29	714.84	421.47								
	Order Coordination for Specified Conversion Time (per LSR)			USL	OCOSL		48.31									
	CLEC to CLEC Conversion Charge without outside dispatch			USL	UREWO		100.99	43.00								
	4-WIRE 19.2, 56 OR 64 KBPS DIGITAL GRADE LOOP															
	4 Wire Unbundled Digital 19.2 Kbps		1	UDL	UDL19	25.32	489.04	337.51								
	4 Wire Unbundled Digital 19.2 Kbps		2	UDL	UDL19	43.11	489.04	337.51								
	4 Wire Unbundled Digital 19.2 Kbps		3	UDL	UDL19	67.26	489.04	337.51								
	4 Wire Unbundled Digital Loop 56 Kbps - Zone 1		1	UDL	UDL56	25.32	489.04	337.51								
	4 Wire Unbundled Digital Loop 56 Kbps - Zone 2		2	UDL	UDL56	43.11	489.04	337.51								
	4 Wire Unbundled Digital Loop 56 Kbps - Zone 3		3	UDL	UDL56	67.26	489.04	337.51								
	Order Coordination for Specified Conversion Time (per LSR)			UDL	OCOSL		45.34									
	4 Wire Unbundled Digital Loop 64 Kbps - Zone 1		1	UDL	UDL64	25.32	489.04	337.51								
	4 Wire Unbundled Digital Loop 64 Kbps - Zone 2		2	UDL	UDL64	43.11	489.04	337.51								
	4 Wire Unbundled Digital Loop 64 Kbps - Zone 3		3	UDL	UDL64	67.26	489.04	337.51								

UNBUNDLED NETWORK ELEMENTS - North Carolina

Attachment: 2 Ex. A

CATEGORY		RATE ELEMENTS	Interim	Zone	BCS	USOC	RATES ($)					Svc Order Submitted Elec per LSR	Svc Order Submitted Manually per LSR	Incremental Charge - Manual Svc Order vs. Electronic-1st	Incremental Charge - Manual Svc Order vs. Electronic-Add'l	Incremental Charge - Manual Svc Order vs. Electronic-Disc 1st	Incremental Charge - Manual Svc Order vs. Electronic-Disc Add'l
							Rec	Nonrecurring		Nonrecurring Disconnect		OSS Rates ($)					
								First	Add'l	First	Add'l	SOMEC	SOMAN	SOMAN	SOMAN	SOMAN	SOMAN
		Order Coordination for Specified Conversion Time (per LSR)			UDL	OCOSL		45.34									
		CLEC to CLEC Conversion Charge without outside dispatch			UDL	UREWO		102.03	49.70								
	2-WIRE Unbundled COPPER LOOP																
		2-Wire Unbundled Copper Loop-Designed including manual service inquiry & facility reservation - Zone 1		1	UCL	UCLPB	13.26	262.86	143.75								
		2-Wire Unbundled Copper Loop-Designed including manual service inquiry & facility reservation - Zone 2		2	UCL	UCLPB	22.39	262.86	143.75								
		2 Wire Unbundled Copper Loop-Designed including manual service inquiry & facility reservation - Zone 3		3	UCL	UCLPB	34.80	262.86	143.75								
		Order Coordination for Unbundled Copper Loops (per loop)			UCL	UCLMC		61.38	61.38								
		2-Wire Unbundled Copper Loop-Designed without manual service inquiry and facility reservation - Zone 1		1	UCL	UCLPW	13.26	188.39	112.96								
		2-Wire Unbundled Copper Loop-Designed without manual service inquiry and facility reservation - Zone 2		2	UCL	UCLPW	22.39	188.39	112.96								
		2-Wire Unbundled Copper Loop-Designed without manual service inquiry and facility reservation - Zone 3		3	UCL	UCLPW	34.80	188.39	112.96								
		Order Coordination for Unbundled Copper Loops (per loop)			UCL	UCLMC		61.38	61.38								
		CLEC to CLEC Conversion Charge without outside dispatch (UCL Des)			UCL	UREWO		97.14	42.44								
	4-WIRE COPPER LOOP																
		4-Wire Copper Loop including manual service inquiry and facility reservation - Zone 1		1	UCL	UCL4S	17.36	311.03	191.93								
		4-Wire Copper Loop including manual service inquiry and facility reservation - Zone 2		2	UCL	UCL4S	29.61	311.03	191.93								
		4-Wire Copper Loop including manual service inquiry and facility reservation - Zone 3		3	UCL	UCL4S	46.26	311.03	191.93								
		Order Coordination for Unbundled Copper Loops (per loop)			UCL	UCLMC		61.38	61.38								
		4-Wire Copper Loop without manual service inquiry and facility reservation - Zone 1		1	UCL	UCL4W	17.36	236.57	161.14								
		4-Wire Copper Loop without manual service inquiry and facility reservation - Zone 2		2	UCL	UCL4W	29.61	236.57	161.14								
		4-Wire Copper Loop without manual service inquiry and facility reservation - Zone 3		3	UCL	UCL4W	46.26	236.57	161.14								
		Order Coordination for Unbundled Copper Loops (per loop)			UCL	UCLMC		61.38	61.38								
		CLEC to CLEC Conversion Charge without outside dispatch (UCL Des)			UCL	UREWO		97.14	42.44								
LOOP MODIFICATION																	
		Unbundled Loop Modification, Removal of Load Coils - 2 Wire pair less than or equal to 18k ft, per Unbundled Loop			UAL, UHL, UCL, UEQ, ULS, UEA, UEANL, UEPSR, UEPSB	ULM2L		21.24	21.24								
		Unbundled Loop Modification Removal of Load Coils - 4 Wire less than or equal to 18K ft, per Unbundled Loop			UHL, UCL, UEA	ULM4L		21.24	21.24								
		Unbundled Loop Modification Removal of Bridged Tap Removal, per unbundled loop			UAL, UHL, UCL, UEQ, ULS, UEA, UEANL, UEPSR, UEPSB	ULMBT		24.84	24.84								
SUB-LOOPS																	
	Sub-Loop Distribution																
		Sub-Loop - Per Cross Box Location - CLEC Feeder Facility Set-Up	I		UEANL	USBSA		373.57									
		Sub-Loop - Per Cross Box Location - Per 25 Pair Panel Set-Up	I		UEANL	USBSB		33.78									
		Sub-Loop - Per Building Equipment Room - CLEC Feeder Facility Set-Up	I		UEANL	USBSC		234.76									
		Sub-Loop - Per Building Equipment Room - Per 25 Pair Panel Set-Up	I		UEANL	USBSD		81.05									
		Sub-Loop Distribution Per 2-Wire Analog Voice Grade Loop - Zone 1	I	1	UEANL	USBN2	7.31	126.03	54.54								
		Sub-Loop Distribution Per 2-Wire Analog Voice Grade Loop - Zone 2	I	2	UEANL	USBN2	11.93	126.03	54.54								
		Sub-Loop Distribution Per 2-Wire Analog Voice Grade Loop - Zone 3	I	3	UEANL	USBN2	18.20	126.03	54.54								

CATEGORY	RATE ELEMENTS	Interim	Zone	BCS	USOC	RATES ($)					Svc Order Submitted Elec per LSR	Svc Order Submitted Manually per LSR	Incremental Charge - Manual Svc Order vs. Electronic-1st	Incremental Charge - Manual Svc Order vs. Electronic-Add'l	Incremental Charge - Manual Svc Order vs. Electronic-Disc 1st	Incremental Charge - Manual Svc Order vs. Electronic-Disc Add'l
						Rec	Nonrecurring		Nonrecurring Disconnect		OSS Rates ($)					
							First	Add'l	First	Add'l	SOMEC	SOMAN	SOMAN	SOMAN	SOMAN	SOMAN
	Order Coordination for Unbundled Sub-Loops, per sub-loop pair			UEANL	USBMC		61.38	61.38								
	Sub-Loop Distribution Per 4-Wire Analog Voice Grade Loop - Zone 1		1	UEANL	USBN4	8.44	156.52	79.66								
	Sub-Loop Distribution Per 4-Wire Analog Voice Grade Loop - Zone 2		2	UEANL	USBN4	13.81	156.52	79.66								
	Sub-Loop Distribution Per 4-Wire Analog Voice Grade Loop - Zone 3		3	UEANL	USBN4	21.10	156.52	79.66								
	Order Coordination for Unbundled Sub-Loops, per sub-loop pair			UEANL	USBMC		61.38	61.38								
	Sub-Loop 2-Wire Intrabuilding Network Cable (INC)	I		UEANL	USBR2	2.79	114.05	37.20								
	Order Coordination for Unbundled Sub-Loops, per sub-loop pair			UEANL	USBMC		61.38	61.38								
	Sub-Loop 4-Wire Intrabuilding Network Cable (INC)	I		UEANL	USBR4	3.74	127.67	50.82								
	Order Coordination for Unbundled Sub-Loops, per sub-loop pair			UEANL	USBMC		61.38	61.38								
	Loop Testing - Basic 1st Half Hour			UEANL	URET1		76.24	76.24								
	Loop Testing - Basic Additional Half Hour			UEANL	URETA		39.51	39.51								
	2 Wire Copper Unbundled Sub-Loop Distribution - Zone 1	I	1	UEF	UCS2X	6.10	137.10	60.24								
	2 Wire Copper Unbundled Sub-Loop Distribution - Zone 2	I	2	UEF	UCS2X	9.70	137.10	60.24								
	2 Wire Copper Unbundled Sub-Loop Distribution - Zone 3	I	3	UEF	UCS2X	14.59	137.10	60.24								
	Order Coordination for Unbundled Sub-Loops, per sub-loop pair			UEF	USBMC		61.38	61.38								
	4 Wire Copper Unbundled Sub-Loop Distribution - Zone 1	I	1	UEF	UCS4X	6.58	162.24	85.38								
	4 Wire Copper Unbundled Sub-Loop Distribution - Zone 2	I	2	UEF	UCS4X	10.51	162.24	85.38								
	4 Wire Copper Unbundled Sub-Loop Distribution - Zone 3	I	3	UEF	UCS4X	15.84	162.24	85.38								
	Order Coordination for Unbundled Sub-Loops, per sub-loop pair			UEF	USBMC		61.38	61.38								
	Loop Testing - Basic 1st Half Hour			UEF	URET1		76.24	76.24								
	Loop Testing - Basic Additional Half Hour			UEF	URETA		39.51	39.51								
	Unbundled Network Terminating Wire (UNTW)															
	Unbundled Network Terminating Wire (UNTW) per Pair			UENTW	UENPP	0.4351	64.98									
	Network Interface Device (NID)															
	Network Interface Device (NID) - 1-2 lines	I		UENTW	UND12		86.37	56.69								
	Network Interface Device (NID) - 1-6 lines	I		UENTW	UND16		127.93	98.21								
	Network Interface Device Cross Connect - 2 W	I		UENTW	UNDC2		11.68	11.68								
	Network Interface Device Cross Connect - 4W	I		UENTW	UNDC4		11.68	11.68								
UNE OTHER, PROVISIONING ONLY - NO RATE																
	NID - Dispatch and Service Order for NID installation			UENTW	UNDBX	0.00	0.00									
	UNTW Circuit Id Establishment, Provisioning Only - No Rate			UENTW	UENCE	0.00	0.00									
	Unbundled Contract Name, Provisioning Only - No Rate			UEANL,UEF,UEQ,UENTW	UNECN	0.00	0.00									
UNE OTHER, PROVISIONING ONLY - NO RATE																
	Unbundled Contact Name, Provisioning Only - no rate			UAL,UCL,UDC,UDL,UDN,UEA,UHL,USL	UNECN	0.00	0.00									
	Unbundled Sub-Loop Feeder-2 Wire Cross Box Jumper - no rate			UEA,UDN,UCL,UDC	USBFQ	0.00	0.00									
	Unbundled Sub-Loop Feeder-4 Wire Cross Box Jumper - no rate			UEA,USL,UCL,UDL	USBFR	0.00	0.00									
	Unbundled DS1 Loop - Superframe Format Option - no rate			USL	CCOSF	0.00	0.00									
	Unbundled DS1 Loop - Expanded Superframe Format option - no rate			USL	CCOEF	0.00	0.00									
HIGH CAPACITY UNBUNDLED LOCAL LOOP																
	High Capacity Unbundled Local Loop - DS3 - Per Mile per month			UE3	1L5ND	13.33										
	High Capacity Unbundled Local Loop - DS3 - Facility Termination per month			UE3	UE3PX	450.69	1,231.65	743.038								
	High Capacity Unbundled Local Loop - STS-1 - Per Mile per month			UDLSX	1L5ND	13.33										
	High Capacity Unbundled Local Loop - STS-1 - Facility Termination per month			UDLSX	UDLS1	464.26	1,231.65	743.038								
LOOP MAKE-UP																

CATEGORY	RATE ELEMENTS	Interim	Zone	BCS	USOC	RATES ($)					Svc Order Submitted Elec per LSR	Svc Order Submitted Manually per LSR	Incremental Charge - Manual Svc Order vs. Electronic-1st	Incremental Charge - Manual Svc Order vs. Electronic-Add'l	Incremental Charge - Manual Svc Order vs. Electronic-Disc 1st	Incremental Charge - Manual Svc Order vs. Electronic-Disc Add'l
						Rec	Nonrecurring		Nonrecurring Disconnect		OSS Rates ($)					
							First	Add'l	First	Add'l	SOMEC	SOMAN	SOMAN	SOMAN	SOMAN	SOMAN
	Loop Makeup - Preordering Without Reservation, per working or spare facility queried (Manual).			UMK	UMKLW		55.44	55.44								
	Loop Makeup - Preordering With Reservation, per spare facility queried (Manual).			UMK	UMKLP		55.73	55.73								
	Loop Makeup--With or Without Reservation, per working or spare facility queried (Mechanized)			UMK	UMKMQ		0.6960821	0.6960821								
LINE SPLITTING																
LINE SPLITTING																
END USER ORDERING-CENTRAL OFFICE BASED																
	Line Splitting - per line activation DLEC owned splitter			UEPSR UEPSB	UREOS	0.61										
	Line Splitting - per line activation BST owned - physical			UEPSR UEPSB	UREBP	0.61	56.92	28.59								
	Line Splitting - per line activation BST owned - virtual			UEPSR UEPSB	UREBV	0.61	56.92	28.59								
MAINTENANCE OF SERVICE																
NOTE: The Expedite charge will be maintained commensurate with BellSouth's FCC No.1 Tariff, Section 13.3.1 as applicable.																
	No Trouble Found - per 1/2 hour increments - Basic						80.00	55.00								
	No Trouble Found - per 1/2 hour increments - Overtime						90.00	65.00								
	No Trouble Found - per 1/2 hour increments - Premium						100.00	75.00								
UNBUNDLED DEDICATED TRANSPORT																
INTEROFFICE CHANNEL - DEDICATED TRANSPORT																
	Interoffice Channel - Dedicated Transport - 2-Wire Voice Grade - Per Mile per month			U1TVX	1L5XX	0.0125										
	Interoffice Channel - Dedicated Transport- 2- Wire Voice Grade - Facility Termination			U1TVX	U1TV2	18.00	137.48	52.58								
	Interoffice Channel - Dedicated Transpor t- 2-Wire Voice Grade Rev Bat. - Per Mile per month			U1TVX	1L5XX	0.0125										
	Interoffice Channel - Dedicated Transport- 2- Wire VG Rev Bat. - Facility Termination			U1TVX	U1TR2	18.00	137.48	52.58								
	Interoffice Channel - Dedicated Transport - 4-Wire Voice Grade - Per Mile per month			U1TVX	1L5XX	0.0125										
	Interoffice Channel - Dedicated Transport - 4- Wire Voice Grade - Facility Termination			U1TVX	U1TV4	22.16	106.11	65.95								
	Interoffice Channel - Dedicated Transport - 56 kbps - per mile per month			U1TDX	1L5XX	0.0282										
	Interoffice Channel - Dedicated Transport - 56 kbps - Facility Termination			U1TDX	U1TD5	17.40	137.48	52.58								
	Interoffice Channel - Dedicated Transport - 64 kbps - per mile per month			U1TDX	1L5XX	0.0282										
	Interoffice Channel - Dedicated Transport - 64 kbps - Facility Termination			U1TDX	U1TD6	17.40	137.48	52.58								
	Interoffice Channel - Dedicated Channel - DS1 - Per Mile per month			U1TD1	1L5XX	0.5753										
	Interoffice Channel - Dedicated Tranport - DS1 - Facility Termination			U1TD1	U1TF1	71.29	217.17	163.75								
	Interoffice Channel - Dedicated Transport - DS3 - Per Mile per month			U1TD3	1L5XX	12.98										
	Interoffice Channel - Dedicated Transport - DS3 - Facility Termination per month			U1TD3	U1TF3	720.38	794.94	579.55								
	Interoffice Channel - Dedicated Transport - STS-1 - Per Mile per month			U1TS1	1L5XX	6.14										
	Interoffice Channel - Dedicated Transport - STS-1 - Facility Termination			U1TS1	U1TFS	790.37	642.23	408.89								
DARK FIBER																
	Dark Fiber, Four Fiber Strands, Per Route Mile or Fraction Thereof per month - Local Channel			UDF, UDFCX	1L5DC	73.65										
	Dark Fiber, Four Fiber Strands, Per Route Mile or Fraction Thereof per month - Interoffice Channel			UDF, UDFCX	1L5DF	27.71										
	NRC Dark Fiber - Interoffice Channel			UDF, UDFCX	UDF14		1,807.00	562.96								
	Dark Fiber, Four Fiber Strands, Per Route Mile or Fraction Thereof per month - Local Loop			UDF, UDFCX	1L5DL	73.65										
8XX ACCESS TEN DIGIT SCREENING																
	8XX Access Ten Digit Screening, Per Call					0.0005										
LINE INFORMATION DATA BASE ACCESS (LIDB)																
	LIDB Common Transport Per Query					0.00003										
	LIDB Validation Per Query					0.0134										

UNBUNDLED NETWORK ELEMENTS - North Carolina

Attachment: 2 Ex. A

CATEGORY	RATE ELEMENTS	Interim	Zone	BCS	USOC	RATES ($) Rec	Nonrecurring First	Nonrecurring Add'l	Nonrecurring Disconnect First	Nonrecurring Disconnect Add'l	Svc Order Submitted Elec per LSR	Svc Order Submitted Manually per LSR	Incremental Charge - Manual Svc Order vs. Electronic-1st	Incremental Charge - Manual Svc Order vs. Electronic-Add'l	Incremental Charge - Manual Svc Order vs. Electronic-Disc 1st	Incremental Charge - Manual Svc Order vs. Electronic-Disc Add'l
											OSS Rates ($)					
											SOMEC	SOMAN	SOMAN	SOMAN	SOMAN	SOMAN
	LIDB Originating Point Code Establishment or Change			OQU	NRBPX		62.26									
CALLING NAME (CNAM) SERVICE																
	CNAM for DB & Non DB Owners, Per Query					0.0009592										
LNP Query Service																
	LNP Charge Per query					0.0007579										
	LNP Service Establishment Manual						12.16									
	LNP Service Provisioning with Point Code Establishment						576.33	294.43								
SELECTIVE ROUTING																
	Selective Routing Per Unique Line Class Code Per Request Per Switch						188.59									
VIRTUAL COLLOCATION																
	Virtual Collocation-2 Wire Cross Connects (Loop) for Line Splitting			UEPSR UEPSB	VE1LS	0.0287	33.96	32.08	0.00	0.00						
PHYSICAL COLLOCATION																
	Physical Collocation-2 Wire Cross Connects (Loop) for Line Splitting			UEPSR UEPSB	PE1LS	0.0309	33.53	31.65	0.00	0.00						
AIN SELECTIVE CARRIER ROUTING																
	Regional Service Establishment						215,597.00									
	End Office Establishment						347.27									
	Query NRC, per query					0.0053758										
AIN - BELLSOUTH AIN SMS ACCESS SERVICE																
	AIN SMS Access Service - Service Establishment, Per State, Initial Setup			A1N	CAMSE		294.77									
	AIN SMS Access Service - Port Connection - Dial/Shared Access			A1N	CAMDP		86.94									
	AIN SMS Access Service - Port Connection - ISDN Access			A1N	CAM1P		86.94									
	AIN SMS Access Service - User Identification Codes - Per User ID Code			A1N	CAMAU		200.83									
	AIN SMS Access Service - Security Card, Per User ID Code, Initial or Replacement			A1N	CAMRC		172.05									
	AIN SMS Access Service - Storage, Per Unit (100 Kilobytes)					0.0023										
	AIN SMS Access Service - Session, Per Minute					0.0791										
	AIN SMS Access Service - Company Performed Session, Per Minute					2.08										
SIGNALING (CCS7)																
	CCS7 Signaling Usage, Per ISUP Message					0.00004										
	CCS7 Signaling Usage, Per TCAP Message					0.00009										
911 PBX LOCATE																
	911 PBX LOCATE DATABASE CAPABILITY															
	Service Establishment per CLEC per End User Account			9PBDC	9PBEU		1,823.00									
	Changes to TN Range or Customer Profile			9PBDC	9PBTN		182.45									
	Per Telephone Number (Monthly)			9PBDC	9PBMM	0.07										
	Change Company (Service Provider) ID			9PBDC	9PBPC		535.57									
	PBX Locate Service Support per CLEC (Monthlt)			9PBDC	9PBMR	165.63										
	Service Order Charge			9PBDC	9PBSC		15.20									
	911 PBX LOCATE TRANSPORT COMPONENT															
	See Att 3															
ENHANCED EXTENDED LINK (EELs)																
	NOTE: The monthly recurring and non-recurring charges below will apply and the Switch-As-Is Charge will not apply for UNE combinations provisioned as ' Ordinarily Combined' Network Elements.															
	NOTE: The monthly recurring and the Switch-As-Is Charge and not the non-recurring charges below will apply for UNE combinations provisioned as ' Currently Combined' Network Elements.															
	2-WIRE VOICE GRADE LOOP FOR USE IN A COMBINATION															
	2-Wire VG Loop (SL2) in Combination - Zone 1		1	UNCVX	UEAL2	14.97	142.97	106.56								
	2-Wire VG Loop (SL2) in Combination - Zone 2		2	UNCVX	UEAL2	25.93	142.97	106.56								
	2-Wire VG Loop (SL2) in Combination - Zone 3		3	UNCVX	UEAL2	40.81	142.97	106.56								
	Voice Grade COCI - Per Month			UNCVX	1D1VG	1.27	13.09	9.38								
	4-WIRE VOICE GRADE LOOP FOR USE IN A COMBINATION															
	4-Wire Analog Voice Grade Loop in Combination - Zone 1		1	UNCVX	UEAL4	21.32	288.47	237.45								
	4-Wire Analog Voice Grade Loop in Combination - Zone 2		2	UNCVX	UEAL4	36.27	288.47	237.45								
	4-Wire Analog Voice Grade Loop in Combination - Zone 3		3	UNCVX	UEAL4	56.57	288.47	237.45								
	Voice Grade COCI in combination - per month			UNCVX	1D1VG	1.27	13.09	9.38								
	4-WIRE 56 KBPS DIGITAL LOOP FOR USE IN A COMBINATION															
	4-Wire 56Kbps Digital Grade Loop in Combination - Zone 1		1	UNCDX	UDL56	25.32	489.04	337.51								
	4-Wire 56Kbps Digital Grade Loop in Combination - Zone 2		2	UNCDX	UDL56	43.11	489.04	337.51								
	4-Wire 56Kbps Digital Grade Loop in Combination - Zone 3		3	UNCDX	UDL56	67.26	489.04	337.51								

UNBUNDLED NETWORK ELEMENTS - North Carolina

Attachment: 2 Ex. A

CATEGORY	RATE ELEMENTS	Interim	Zone	BCS	USOC	RATES ($)					Svc Order Submitted Elec per LSR	Svc Order Submitted Manually per LSR	Incremental Charge - Manual Svc Order vs. Electronic-1st	Incremental Charge - Manual Svc Order vs. Electronic-Add'l	Incremental Charge - Manual Svc Order vs. Electronic-Disc 1st	Incremental Charge - Manual Svc Order vs. Electronic-Disc Add'l
						Rec	Nonrecurring		Nonrecurring Disconnect		OSS Rates ($)					
							First	Add'l	First	Add'l	SOMEC	SOMAN	SOMAN	SOMAN	SOMAN	SOMAN
	OCU-DP COCI (data) per month (2.4-64kbs)			UNCDX	1D1DD	2.00	15.76	11.28								
	4-WIRE 64 KBPS DIGITAL LOOP FOR USE IN A COMBINATI\ON															
	4-Wire 64Kbps Digital Grade Loop in Combination - Zone 1		1	UNCDX	UDL64	25.32	489.04	337.51								
	4-Wire 64Kbps Digital Grade Loop in Combination - Zone 2		2	UNCDX	UDL64	43.11	489.04	337.51								
	4-Wire 64Kbps Digital Grade Loop in Combination - Zone 3		3	UNCDX	UDL64	67.26	489.04	337.51								
	OCU-DP COCI (data) - in combination - per month (2.4-64kbs)			UNCDX	1D1DD	2.00	15.76	11.28								
	2-WIRE ISDN LOOP FOR USE IN COMBINATION															
	2-Wire ISDN Loop in Combination - Zone 1		1	UNCNX	U1L2X	19.42	325.91	251.31								
	2-Wire ISDN Loop in Combination - Zone 2		2	UNCNX	U1L2X	32.88	325.91	251.31								
	2-Wire ISDN Loop in Combination - Zone 3		3	UNCNX	U1L2X	51.14	325.91	251.31								
	2-wire ISDN COCI (BRITE) - in combination - per month			UNCNX	UC1CA	3.59	15.76	11.28								
	4-WIRE DS1 DIGITAL LOOP FOR USE IN A COMBINATION															
	4-Wire DS1 Digital Loop in Combination - Zone 1		1	UNC1X	USLXX	47.60	714.84	421.47								
	4-Wire DS1 Digital Loop in Combination - Zone 2		2	UNC1X	USLXX	84.36	714.84	421.47								
	4-Wire DS1 Digital Loop in Combination - Zone 3		3	UNC1X	USLXX	134.29	714.84	421.47								
	DS1 COCI in combination per month			UNC1X	UC1D1	16.07	13.09	9.38								
	2 WIRE VOICE GRADE INTEROFFICE TRANSPORT FOR USE IN A COMBINATION															
	Interoffice Transport - 2-wire VG - Dedicated- Per Mile Per Month			UNCVX	1L5XX	0.0282										
	Interoffice Transport - 2-wire VG - Dedicated - Facility Termination per month			UNCVX	U1TV2	18.00	137.48	52.58								
	4 WIRE VOICE GRADE INTEROFFICE TRANSPORT FOR USE IN A COMBINATION															
	Interoffice Transport - 4-wire VG - Dedicated - Per Mile Per Month			UNCVX	1L5XX	0.0282										
	Interoffice Transport - 4-wire VG - Dedicated - Facility Termination per month			UNCVX	U1TV4	22.16	106.11	65.95								
	DS1 INTEROFFICE TRANSPORT FOR COMBINATION															
	Interoffice Transport - Dedicated - DS1 combination - Per Mile per month			UNC1X	1L5XX	16.07										
	Interoffice Transport - Dedicated - DS1 combination - Facility Termination per month			UNC1X	U1TF1	71.29	217.17	163.75								
	DS3 INTEROFFICE TRANSPORT FOR USE IN A COMBINATION															
	Interoffice Transport - Dedicated - DS3 combination - Per Mile Per Month			UNC3X	1L5XX	12.98										
	Interoffice Transport - Dedicated - DS3 - Facility Termination per month			UNC3X	U1TF3	720.38	794.94	579.55								
	STS-1 INTEROFFICE TRANSPORT FOR USE IN COMBINATION															
	Interoffice Transport - Dedicated - STS-1 combination - Per Mile Per Month			UNCSX	1L5XX	6.14										
	Interoffice Transport - Dedicated - STS-1 combination - Facility Termination per month			UNCSX	U1TFS	790.37	642.23	408.89								
	4-WIRE 56 KBPS DIGITAL LOOP WITH 56 KBPS INTEROFFICE TRANSPORT															
	4-wire 56 kbps Local Loop in combination - Zone 1		1	UNCDX	UDL56	25.32	489.04	337.51								
	4-wire 56 kbps Local Loop in combination - Zone 2		2	UNCDX	UDL56	43.11	489.04	337.51								
	4-wire 56 kbps Local Loop in combination - Zone 3		3	UNCDX	UDL56	67.26	489.04	337.51								
	Interoffice Transport - Dedicated - 4-wire 56 kbps combination - Per Mile per month			UNCDX	1L5XX	0.0282										
	Interoffice Transport - Dedicated - 4-wire 56 kbps combination - Facility Termination per month			UNCDX	U1TD5	17.40	137.48	52.58								
	4-WIRE 64 KBPS DIGITAL EXTENDED LOOP WITH 64 KBPS INTEROFFICE TRANSPORT															
	4-wire 64 kbps Lcoal Loop in Combination - Zone 1		1	UNCDX	UDL64	25.32	489.04	337.51								
	4-wire 64 kbps Lcoal Loop in Combination - Zone 2		2	UNCDX	UDL64	43.11	489.04	337.51								
	4-wire 64 kbps Lcoal Loop in Combination - Zone 3		3	UNCDX	UDL64	67.26	489.04	337.51								
	Interoffice Transport - Dedicated - 4-wire 64 kbps combination - Per Mile per month			UNCDX	1L5XX	0.0282										
	Interoffice Transport - Dedicated - 4-wire 64 kbps combination - Facility Termination per month			UNCDX	U1TD6	17.40	137.48	52.58								
	4-WIRE 56 KBPS DIGITAL EXTENDED LOOP WITH DS0 INTEROFFICE TRANSPORT															
	4-wire 56 kbps Local Loop in combination - Zone 1		1	UNCDX	UDL56	25.32	489.04	337.51								
	4-wire 56 kbps Local Loop in combination - Zone 2		2	UNCDX	UDL56	43.11	489.04	337.51								
	4-wire 56 kbps Local Loop in combination - Zone 3		3	UNCDX	UDL56	67.26	489.04	337.51								
	4-wiree 56 kbps Interoffice Transport - Dedicated - Per Mile per month			UNCDX	1L5XX	0.0282										

UNBUNDLED NETWORK ELEMENTS - North Carolina

Attachment: 2 Ex. A

CATEGORY	RATE ELEMENTS	Interim	Zone	BCS	USOC	RATES ($) Rec	Nonrecurring First	Nonrecurring Add'l	Nonrecurring Disconnect First	Nonrecurring Disconnect Add'l	Svc Order Submitted Elec per LSR	Svc Order Submitted Manually per LSR	Incremental Charge - Manual Svc Order vs. Electronic-1st	Incremental Charge - Manual Svc Order vs. Electronic-Add'l	Incremental Charge - Manual Svc Order vs. Electronic-Disc 1st	Incremental Charge - Manual Svc Order vs. Electronic-Disc Add'l
											OSS Rates ($)					
							First	Add'l	First	Add'l	SOMEC	SOMAN	SOMAN	SOMAN	SOMAN	SOMAN
	4-wire 56 kbps Interoffice Transport - Dedicated - Facility Termination per month			UNCDX	U1TD5	17.40	137.48	52.58								
	4-WIRE 64 KBPS DIGITAL EXTENDED LOOP WITH DS0 INTEROFFICE TRANSPORT															
	4-wire 64 kbps Local Loop in combination - Zone 1		1	UNCDX	UDL64	25.32	489.04	337.51								
	4-wire 64 kbps Local Loop in combination - Zone 2		2	UNCDX	UDL64	43.11	489.04	337.51								
	4-wire 64 kbps Local Loop in combination - Zone 3		3	UNCDX	UDL64	67.26	489.04	337.51								
	I4-wire 65 kbps Interoffice Transport - Dedicated - Per Mile per month			UNCDX	1L5XX	0.0282										
	4-wire 64 kbps Interoffice Transport - Dedicated - Facility Termination per month			UNCDX	U1TD6	17.40	137.48	52.58								
	DS1 DIGITAL LOOP AND DS1 INTERFOFFICE TRANSPORT															
	4-Wire DS1 Digital Loop in Combination - Zone 1		1	UNC1X	USLXX	47.60	714.84	421.47								
	4-Wire DS1 Digital Loop in Combination - Zone 2		2	UNC1X	USLXX	84.36	714.84	421.47								
	4-Wire DS1 Digital Loop in Combination - Zone 3		3	UNC1X	USLXX	134.29	714.84	421.47								
	Interoffice Transport - Dedicated - DS1 combination - Per Mile per month			UNC1X	1L5XX	16.07										
	Interoffice Transport - Dedicated - DS1 combination - Facility Termination per month			UNC1X	U1TF1	71.29	217.17	163.75								
	DS3 DIGITAL LOOP WITH DEDICATED DS3 INTEROFFICE TRANSPORT															
	DS3 Local Loop in combination - per mile per month			UNC3X	1L5ND	13.33										
	DS3 Local Loop in combination - Facility Termination per month			UNC3X	UE3PX	450.69	1,071.00	646.12								
	Interoffice Transport - Dedicated - DS3 - Per Mile per month			UNC3X	1L5XX	12.98										
	Interoffice Transport - Dedicated - DS3 combination - Facility Termination per month			UNC3X	U1TF3	720.38	794.94	579.55								
	STS-1 DIGITAL LOOP WITH DEDICATED STS-1 INTEROFFICE TRANSPORT															
	STS-1 Local Lolp in combination - per mile per month			UNCSX	1L5ND	13.33										
	STS-1 Local Loop in combination - Facility Termination per month			UNCSX	UDLS1	464.26	1,071.00	646.12								
	Interoffice Transport - Dedicated - STS-1 combination - per mile per month			UNCSX	1L5XX	6.14										
	Interoffice Transport - Dedicated - STS-1 combination - Facility Termination per month			UNCSX	U1TFS	790.37	642.23	408.89								
ADDITIONAL NETWORK ELEMENTS																
	When used as a part of a currently combined facility, the non-recurrng charges do not apply, but a Switch As Is charge does apply.															
	When used as ordinarily combined network elements in All States, the non-recurring charges apply and the Switch As Is Charge does not.															
	Commingling Authorization			UNCVX, UNCDX, UNC1X, UNC3X, UNCSX, U1TD1, U1TD3, U1TS1, UE3, UDLSX, U1TVX, U1TDX, U1TUB	CMGAU	0.00	0.00	0.00	0.00	0.00						
	Nonrecurring Currently Combined Network Elements "Switch As Is" Charge (One applies to each combination)															
	Nonrecurring Currently Combined Network Elements Switch -As-Is Charge			UNCVX, UNCDX, UNC1X, UNC3X, UNCSX	UNCCC		21.75	21.75	32.28	10.96						
	Optional Features & Functions:															
	Clear Channel Capability Extended Frame Option - per DS1	I		U1TD1, ULDD1,UNC1X	CCOEF		0.00	0.00	0.00	0.00						
	Clear Channel Capability Super FrameOption - per DS1	I		U1TD1, ULDD1,UNC1X	CCOSF		0.00	0.00	0.00	0.00						
	Clear Channel Capability (SF/ESF) Option - Subsequent Activity - per DS1	I		ULDD1, U1TD1, UNC1X, USL	NRCCC		184.76	23.80	1.99	0.78						
	C-bit Parity Option - Subsequent Activity - per DS3	i		U1TD3, ULDD3, UE3, UNC3X	NRCC3		218.92	7.66	0.7576	0.00						
	MULTIPLEXERS															
	DS1 to DS0 Channel System per month			UNC1X	MQ1	146.69	197.78	140.06								
	OCU-DP COCI (data) - DS1 to DS0 Channel System - per month (2.4-64kbs) used for a Local Loop			UDL	1D1DD	2.00	13.09	9.38								
	OCU-DP COCI (data) - DS1 to DS0 Channel System - per month (2.4-64kbs) used for connection to a channelized DS1 Local Channel in the same SWC as collocation			U1TUD	1D1DD	2.00	13.09	9.38								

UNBUNDLED NETWORK ELEMENTS - North Carolina

Attachment: 2 Ex. A

CATEGORY	RATE ELEMENTS	Interim	Zone	BCS	USOC	RATES ($)					Svc Order Submitted Elec per LSR	Svc Order Submitted Manually per LSR	Incremental Charge - Manual Svc Order vs. Electronic-1st	Incremental Charge - Manual Svc Order vs. Electronic-Add'l	Incremental Charge - Manual Svc Order vs. Electronic-Disc 1st	Incremental Charge - Manual Svc Order vs. Electronic-Disc Add'l
						Rec	Nonrecurring		Nonrecurring Disconnect		OSS Rates ($)					
							First	Add'l	First	Add'l	SOMEC	SOMAN	SOMAN	SOMAN	SOMAN	SOMAN
	2-wire ISDN COCI (BRITE) - DS1 to DS0 Channel Systsem - per month for a Local Loop			UDN	UC1CA	3.59	13.09	9.38								
	2-wire ISDN COCI (BRITE) - DS1 to DS0 Channel Systsem - per month used for connection to a channelized DS1 Local Channel in the same SWC as collocation			U1TUB	UC1CA	3.59	13.09	9.38								
	Voice Grade COCI - DS1 to DS0 Channel System - per month used for a Local Loop			UEA	1D1VG	1.27	13.09	9.38								
	Voice Grade COCI - DS1 to DS0 Channel System - per month used for connection to a channelized DS1 Local Channel in the same SWC as collocation			U1TUC	1D1VG	1.27	13.09	9.38								
	DS3 to DS1 Channel System per month			UNC3X	MQ3	233.10	403.97	234.40								
	STS-1 to DS1 Channel System per month			UNCSX	MQ3	233.10	403.97	234.40								
	DS1 COCI used with Loop per month			USL	UC1D1	16.07	13.09	9.38								
	DS1 COCI (used for connection to a channelized DS1 Local Channel in the same SWC as collocation) per month			U1TUA	UC1D1	16.07	13.09	9.38								
	DS1 COCI used with Interoffice Channel per month			U1TD1	UC1D1	16.07	13.09	9.38								
	DS3 Interface Unit (DS1 COCI) used with Local Channel per month			ULDD1	UC1D1	16.07	13.09	9.38								
UNBUNDLED LOCAL EXCHANGE SWITCHING(PORTS)																
	The Exchange Switching Port Rates Reflected Here Apply to Embedded Base Switching Ports as of March 10, 2005 and Consist of the TELRIC Cost Based Rates Plus $1.00 in Accordance with the TRRO.															
	Exchange Ports															
	NOTE: Although the Port Rate includes all available features in GA, KY, LA & TN, the desired features will need to be ordered using retail USOCs															
	2-WIRE VOICE GRADE LINE PORT RATES (RES)															
	Exchange Ports - 2-Wire Analog Line Port- Res.			UEPSR	UEPRL	3.19	21.60	21.60								
	Exchange Ports - 2-Wire Analog Line Port with Caller ID - Res.			UEPSR	UEPRC	3.19	21.60	21.60								
	Exchange Ports - 2-Wire Analog Line Port outgoing only - Res.			UEPSR	UEPRO	3.19	21.60	21.60								
	Exchange Ports - 2-Wire VG unbundled res, low usage line port with Caller ID (LUM)			UEPSR	UEPAP	3.19	21.60	21.60								
	2-Wire voice unbundled Low Usage Line Port without Caller ID Capability			UEPSR	UEPRT	3.19	21.60	21.60								
	2-Wire Voice Grade Unbundled Port without Caller ID capability, North Carolina			UEPSR	UEPRZ	3.19	21.60	21.60								
	2-Wire Voice Grade Unbundled Port with Caller ID capability, North Carolina			UEPSR	UEPRY	3.19	21.60	21.60								
	Subsequent Activity			UEPSR	USASC	0.00	0.00	0.00								
	FEATURES															
	All Available Vertical Features			UEPSR	UEPVF	3.40	0.00	0.00								
	2-WIRE VOICE GRADE LINE PORT RATES (BUS)															
	Exchange Ports - 2-Wire Analog Line Port without Caller ID - Bus			UEPSB	UEPBL	3.19	21.60	21.60								
	Exchange Ports - 2-Wire VG unbundled Line Port with unbundled port with Caller+E484 ID - Bus.			UEPSB	UEPBC	3.19	21.60	21.60								
	Exchange Ports - 2-Wire Analog Line Port outgoing only - Bus.			UEPSB	UEPBO	3.19	21.60	21.60								
	Exhange Ports - 2-Wire VG unbundled incoming only port with Caller ID - Bus			UEPSB	UEPB1	3.19	21.60	21.60								
	2-Wire voice unbundled Incoming Only Port without Caller ID Capability			UEPSB	UEPBE	3.19	21.60	21.60								
	Subsequent Activity			UEPSB	USASC	0.00	0.00	0.00								
	FEATURES															
	All Available Vertical Features			UEPSB	UEPVF	3.40	0.00	0.00								
	EXCHANGE PORT RATES (DID & PBX)															
	2-Wire VG Unbundled 2-Way PBX Trunk - Res			UEPSE	UEPRD	3.18	21.60	21.60								
	2-Wire VG Line Side Unbundled 2-Way PBX Trunk - Bus			UEPSP	UEPPC	3.18	21.60	21.60								
	2-Wire VG Line Side Unbundled Outward PBX Trunk - Bus			UEPSP	UEPPO	3.18	21.60	21.60								
	2-Wire VG Line Side Unbundled Incoming PBX Trunk - Bus			UEPSP	UEPP1	3.18	21.60	21.60								
	2-Wire Analog Long Distance Terminal PBX Trunk - Bus			UEPSP	UEPLD	3.18	21.60	21.60								
	2-Wire Voice Unbundled PBX LD Terminal Ports			UEPSP	UEPLD	3.18	21.60	21.60								
	2-Wire Vice Unbundled 2-Way PBX Usage Port			UEPSP	UEPXA	3.18	21.60	21.60								
	2-Wire Voice Unbundled PBX Toll Terminal Hotel Ports			UEPSP	UEPXB	3.18	21.60	21.60								
	2-Wire Voice Unbundled PBX LD DDD Terminals Port			UEPSP	UEPXC	3.18	21.60	21.60								

UNBUNDLED NETWORK ELEMENTS - North Carolina

Attachment: 2 Ex. A

CATEGORY	RATE ELEMENTS	Interim	Zone	BCS	USOC	RATES ($)					Svc Order Submitted Elec per LSR	Svc Order Submitted Manually per LSR	Incremental Charge - Manual Svc Order vs. Electronic-1st	Incremental Charge - Manual Svc Order vs. Electronic-Add'l	Incremental Charge - Manual Svc Order vs. Electronic-Disc 1st	Incremental Charge - Manual Svc Order vs. Electronic-Disc Add'l
						Rec	Nonrecurring		Nonrecurring Disconnect		OSS Rates ($)					
							First	Add'l	First	Add'l	SOMEC	SOMAN	SOMAN	SOMAN	SOMAN	SOMAN
	2-Wire Voice Unbundled PBX LD Terminal Switchboard Port			UEPSP	UEPXD	3.18	21.60	21.60								
	2-Wire Voice Unbundled PBX LD Terminal Switchboard IDD Capable Port			UEPSP	UEPXE	3.18	21.60	21.60								
	2-Wire Voice Unbundled 2-Way PBX Hotel/Hospital Economy Administrative Calling Port			UEPSP	UEPXL	3.18	21.60	21.60								
	2-Wire Voice Unbundled 2-Way PBX Hotel/Hospital Economy Room Calling Port			UEPSP	UEPXM	3.18	21.60	21.60								
	2-Wire Voice Unbundled 1-Way Outgoing PBX Hotel/Hospital Discount Room Calling Port			UEPSP	UEPXO	3.18	21.60	21.60								
	2-Wire Voice Unbundled 1-Way Outgoing PBX Measured Port			UEPSP	UEPXS	3.18	21.60	21.60								
	Subsequent Activity			UEPSP	USASC	0.00	0.00	0.00								
FEATURES																
	All Available Vertical Features			UEPSP UEPSE	UEPVF	3.40	0.00	0.00								
NOTE: Transmission/usage charges associated with POTS circuit switched usage will also apply to circuit switched voice and/or circuit switched data transmission by B-Channels associated with 2-wire ISDN ports.																
NOTE: Access to B Channel or D Channel Packet capabilities will be available only through BFR/New Business Request Process. Rates for the packet capabilities will be determined via the Bona Fide Request/New Business Request Process.																
2-WIRE VOICE GRADE LINE PORT RATES (DID)																
	Exchange Ports - 2-Wire DID Port			UEPEX	UEPP2	13.36	81.84	81.84								
2-WIRE VOICE GRADE LINE PORT RATES (ISDN-BRI)																
	Exchange Ports - 2-Wire ISDN Port (See Notes below.)			UEPTX, UEPSX	U1PMA	25.50	62.29	62.29								
	All Features Offered			UEPTX, UEPSX	UEPVF	3.40	0.00	0.00								
	Exchange Ports - 2-Wire ISDN Port -- Channel Profiles			UEPTX, UEPSX	U1UMA	0.00	0.00	0.00								
NOTE: Transmission/usage charges associated with POTS circuit switched usage will also apply to circuit switched voice and/or circuit switched data transmission by B-Channels associated with 2-wire ISDN ports.																
NOTE: Access to B Channel or D Channel Packet capabilities will be available only through BFR/New Business Request Process. Rates for the packet capabilities will be determined via the Bona Fide Request/New Business Request Process.																
UNBUNDLED PORT with REMOTE CALL FORWARDING CAPABILITY																
UNBUNDLED REMOTE CALL FORWARDING SERVICE - RESIDENCE																
	Unbundled Remote Call Forwarding Service, Area Calling, Res			UEPVR	UERAC	3.19	21.60	21.60								
	Unbundled Remote Call Forwarding Service, Local Calling - Res			UEPVR	UERLC	3.19	21.60	21.60								
	Unbundled Remote Call Forwarding Service, InterLATA - Res			UEPVR	UERTE	3.19	21.60	21.60								
	Unbundled Remote Call Forwarding Service, IntraLATA - Res			UEPVR	UERTR	3.19	21.60	21.60								
Non-Recurring																
	Unbundled Remote Call Forwarding Service - Conversion - Switch-as-is			UEPVR	USAC2		2.77	0.40								
	Unbundled Remote Call Forwarding Service - Conversion with allowed change (PIC and LPIC)			UEPVR	USACC		2.77	0.40								
UNBUNDLED REMOTE CALL FORWARDING - Bus																
	Unbundled Remote Call Forwarding Service, Area Calling - Bus			UEPVB	UERAC	3.19	21.60	21.60								
	Unbundled Remote Call Forwarding Service, Local Calling - Bus			UEPVB	UERLC	3.19	21.60	21.60								
	Unbundled Remote Call Forwarding Service, InterLATA - Bus			UEPVB	UERTE	3.19	21.60	21.60								
	Unbundled Remote Call Forwarding Service, IntraLATA - Bus			UEPVB	UERTR	3.19	21.60	21.60								
	Unbundled Remote Call Forwarding Service Expanded and Exception Local Calling			UEPVB	UERVJ	3.19	21.60	21.60								
Non-Recurring																
	Unbundled Remote Call Forwarding Service - Conversion - Switch-as-is			UEPVB	USAC2		2.77	0.40								
	Unbundled Remote Call Forwarding Service - Conversion with allowed change (PIC and LPIC)			UEPVB	USACC		2.77	0.40								
UNBUNDLED LOCAL SWITCHING, PORT USAGE																
End Office Switching (Port Usage)																
	End Office Switching Function, Per MOU					0.0015										
	End Office Trunk Port - Shared, Per MOU					0.00023										
Tandem Switching (Port Usage) (Local or Access Tandem)																
	Tandem Switching Function Per MOU					0.0006										
	Tandem Trunk Port - Shared, Per MOU					0.0003										
	Tandem Switching Function Per MOU (Melded)					0.00024618										
	Tandem Trunk Port - Shared, Per MOU (Melded)					0.00012309										
Melded Factor: 41.03% of the Tandem Rate																
Common Transport																
	Common Transport - Per Mile, Per MOU					0.00001										
	Common Transport - Facilities Termination Per MOU					0.00034										
UNBUNDLED PORT/LOOP COMBINATIONS - COST BASED RATES																
>Cost Based Rates are applied where BellSouth is required by FCC and/or State Commission rule to provide Unbundled Local Switching or Switch Ports.																

UNBUNDLED NETWORK ELEMENTS - North Carolina

Attachment: 2 Ex. A

CATEGORY	RATE ELEMENTS	Interim	Zone	BCS	USOC	RATES ($)					Svc Order Submitted Elec per LSR	Svc Order Submitted Manually per LSR	Incremental Charge - Manual Svc Order vs. Electronic-1st	Incremental Charge - Manual Svc Order vs. Electronic-Add'l	Incremental Charge - Manual Svc Order vs. Electronic-Disc 1st	Incremental Charge - Manual Svc Order vs. Electronic-Disc Add'l
						Rec	Nonrecurring		Nonrecurring Disconnect		OSS Rates ($)					
							First	Add'l	First	Add'l	SOMEC	SOMAN	SOMAN	SOMAN	SOMAN	SOMAN
	> The UNE-P Switching Port Rates Reflected in the Cost Based Section Apply to Embedded Base UNE-Ps as of March 10, 2005 and Consist of the TELRIC Cost Based Rates Plus $1.00 in Accordance with the TRRO.															
	>Features shall apply to the Unbundled Port/Loop Combination - Cost Based Rate section in the same manner as they are applied to the Stand-Alone Unbundled Port section of this Rate Exhibit.															
	>End Office and Tandem Switching Usage and Common Transport Usage rates in the Port section of this rate exhibit shall apply to all combinations of loop/port network elements except for UNE Coin Port/Loop Combinations.															
	>The first and additional Port nonrecurring charges apply to Not Currently Combined Combos. For Currently Combined Combos the nonrecurring charges shall be those identified in the Nonrecurring - Currently Combined sections.															
	2-WIRE VOICE GRADE LOOP WITH 2-WIRE LINE PORT (RES)															
	UNE Port/Loop Combination Rates															
	2-Wire VG Loop/Port Combo - Zone 1					14.03										
	2-Wire VG Loop/Port Combo - Zone 2					22.33										
	2-Wire VG Loop/Port Combo - Zone 3					33.61										
	UNE Loop Rates															
	2-Wire Voice Grade Loop (SL1) - Zone 1		1	UEPRX	UEPLX	10.75										
	2-Wire Voice Grade Loop (SL1) - Zone 2		2	UEPRX	UEPLX	19.05										
	2-Wire Voice Grade Loop (SL1) - Zone 3		3	UEPRX	UEPLX	30.33										
	2-Wire Voice Grade Line Port Rates (Res)															
	2-Wire voice unbundled port - residence			UEPRX	UEPRL	3.28	79.59	63.97								
	2-Wire voice unbundled port with Caller ID - res			UEPRX	UEPRC	3.28	79.59	63.97								
	2-Wire voice unbundled port outgoing only - res			UEPRX	UEPRO	3.28	79.59	63.97								
	2-Wire voice unbundles res, low usage line port with Caller ID (LUM)			UEPRX	UEPAP	3.28	79.59	63.97								
	2-Wire voice unbundled Low Usage Line Port without Caller ID Capability			UEPRX	UEPRT	3.28	79.59	63.97								
	2-Wire Voice Grade Unbundled Port without Caller ID capability, North Carolina			UEPRX	UEPRZ	3.28	79.59	63.97								
	2-Wire Voice Grade Unbundled Port without Caller ID capability, North Carolina			UEPRX	UEPRY	3.28	79.59	63.97								
	FEATURES															
	All Features Offered			UEPRX	UEPVF	3.40	0.00	0.00								
	NONRECURRING CHARGES (NRCs) - CURRENTLY COMBINED															
	2-Wire Voice Grade Loop / Line Port Combination - Conversion - Switch-as-is			UEPRX	USAC2		2.77	0.40								
	2-Wire Voice Grade Loop / Line Port Combination - Conversion - Switch with change			UEPRX	USACC		2.77	0.40								
	2-Wire Voice Grade Loop / Line Port Combination - Conversion - Subsequent Database Update						1.42									
	2-Wire Voice Grade Loop / Line Port Platform - Installation Charge at QuickService location - Not Conversion of Existing Service			UEPRX	URECC		2.77									
	ADDITIONAL NRCs															
	2-Wire Voice Grade Loop/Line Port Combination - Subsequent Activity			UEPRX	USAS2	0.00	0.00	0.00								
	Unbundled Miscellaneous Rate Element, Tag Loop at End User Premise			UEPRX	URETL		8.33	0.83								
	OFF/ON PREMISES EXTENSION CHANNELS															
	2 Wire Analog Voice Grade Extension Loop – Non-Design		1	UEPRX	UEAEN	12.11	57.99	42.37								
	2 Wire Analog Voice Grade Extension Loop – Non-Design		2	UEPRX	UEAEN	21.24	57.99	42.37								
	2 Wire Analog Voice Grade Extension Loop – Non-Design		3	UEPRX	UEAEN	33.65	57.99	42.37								
	2 Wire Analog Voice Grade Extension Loop – Design		1	UEPRX	UEAED	14.97	142.97	106.56								
	2 Wire Analog Voice Grade Extension Loop – Design		2	UEPRX	UEAED	25.93	142.97	106.56								
	2 Wire Analog Voice Grade Extension Loop – Design		3	UEPRX	UEAED	40.81	142.97	106.56								
	INTEROFFICE TRANSPORT															
	Interoffice Transport - Dedicated - 2 Wire Voice Grade - Facility Termination			UEPRX	U1TV2	18.00	137.48	52.58								
	Interoffice Transport - Dedicated - 2 Wire Voice Grade - Per Mile or Fraction Mile			UEPRX	U1TVM	0.0125	0.00	0.00								
	2-WIRE VOICE GRADE LOOP WITH 2-WIRE LINE PORT (BUS)															
	UNE Port/Loop Combination Rates															
	2-Wire VG Loop/Port Combo - Zone 1					14.03										
	2-Wire VG Loop/Port Combo - Zone 2					22.33										
	2-Wire VG Loop/Port Combo - Zone 3					33.61										
	UNE Loop Rates															

UNBUNDLED NETWORK ELEMENTS - North Carolina

Attachment: 2 Ex. A

CATEGORY	RATE ELEMENTS	Interim	Zone	BCS	USOC	RATES ($)					Svc Order Submitted Elec per LSR	Svc Order Submitted Manually per LSR	Incremental Charge - Manual Svc Order vs. Electronic-1st	Incremental Charge - Manual Svc Order vs. Electronic-Add'l	Incremental Charge - Manual Svc Order vs. Electronic-Disc 1st	Incremental Charge - Manual Svc Order vs. Electronic-Disc Add'l
						Rec	Nonrecurring		Nonrecurring Disconnect		OSS Rates ($)					
							First	Add'l	First	Add'l	SOMEC	SOMAN	SOMAN	SOMAN	SOMAN	SOMAN
	2-Wire Voice Grade Loop (SL1) - Zone 1		1	UEPBX	UEPLX	10.75										
	2-Wire Voice Grade Loop (SL1) - Zone 2		2	UEPBX	UEPLX	19.05										
	2-Wire Voice Grade Loop (SL1) - Zone 3		3	UEPBX	UEPLX	30.33										
2-Wire Voice Grade Line Port (Bus)																
	2-Wire voice unbundled port without Caller ID - bus			UEPBX	UEPBL	3.28	79.59	63.97								
	2-Wire voice unbundled port with Caller + E484 ID - bus			UEPBX	UEPBC	3.28	79.59	63.97								
	2-Wire voice unbundled port outgoing only - bus			UEPBX	UEPBO	3.28	79.59	63.97								
	2-Wire voice unbundled incoming only port with Caller ID - Bus			UEPBX	UEPB1	3.28	79.59	63.97								
	2-Wire voice unbundled Incoming Only Port without Caller ID Capability			UEPBX	UEPBE	3.28	79.59	63.97								
FEATURES																
	All Features Offered			UEPBX	UEPVF	3.40	0.00	0.00								
NONRECURRING CHARGES (NRCs) - CURRENTLY COMBINED																
	2-Wire Voice Grade Loop / Line Port Combination - Conversion - Switch-as-is			UEPBX	USAC2		2.77	0.40								
	2-Wire Voice Grade Loop / Line Port Combination - Conversion - Switch with change			UEPBX	USACC		2.77	0.40								
	2-Wire Voice Grade Loop / Line Port Combination - Conversion - Subsequent Database Update						1.42									
ADDITIONAL NRCs																
	2-Wire Voice Grade Loop/Line Port Combination - Subsequent Activity			UEPBX	USAS2		0.00	0.00								
	Unbundled Miscellaneous Rate Element, Tag Loop at End User Premise			UEPBX	URETL		8.33	0.83								
OFF/ON PREMISES EXTENSION CHANNELS																
	2 Wire Analog Voice Grade Extension Loop – Non-Design		1	UEPBX	UEAEN	12.11	57.99	42.37								
	2 Wire Analog Voice Grade Extension Loop – Non-Design		2	UEPBX	UEAEN	21.24	57.99	42.37								
	2 Wire Analog Voice Grade Extension Loop – Non-Design		3	UEPBX	UEAEN	33.65	57.99	42.37								
	2 Wire Analog Voice Grade Extension Loop – Design		1	UEPBX	UEAED	14.97	142.97	106.56								
	2 Wire Analog Voice Grade Extension Loop – Design		2	UEPBX	UEAED	25.93	142.97	106.56								
	2 Wire Analog Voice Grade Extension Loop – Design		3	UEPBX	UEAED	40.81	142.97	106.56								
INTEROFFICE TRANSPORT																
	Interoffice Transport - Dedicated - 2 Wire Voice Grade - Facility Termination			UEPBX	U1TV2	18.00	137.48	52.58								
	Interoffice Transport - Dedicated - 2 Wire Voice Grade - Per Mile or Fraction Mile			UEPBX	U1TVM	0.0125	0.00	0.00								
2-WIRE VOICE GRADE LOOP WITH 2-WIRE LINE PORT (RES - PBX)																
UNE Port/Loop Combination Rates																
	2-Wire VG Loop/Port Combo - Zone 1					14.03										
	2-Wire VG Loop/Port Combo - Zone 2					22.33										
	2-Wire VG Loop/Port Combo - Zone 3					33.61										
UNE Loop Rates																
	2-Wire Voice Grade Loop (SL 1) - Zone 1		1	UEPRG	UEPLX	10.75										
	2-Wire Voice Grade Loop (SL 1) - Zone 2		2	UEPRG	UEPLX	19.05										
	2-Wire Voice Grade Loop (SL 1) - Zone 3		3	UEPRG	UEPLX	30.33										
2-Wire Voice Grade Line Port Rates (RES - PBX)																
	2-Wire VG Unbundled Combination 2-Way PBX Trunk Port - Res			UEPRG	UEPRD	3.28	164.57	128.16								
FEATURES																
	All Features Offered			UEPRG	UEPVF	3.40	0.00	0.00								
NONRECURRING CHARGES (NRCs) - CURRENTLY COMBINED																
	2-Wire Voice Grade Loop/ Line Port Combination (PBX) - Conversion - Switch-As-Is			UEPRG	USAC2		2.77	0.40								
	2-Wire Voice Grade Loop/ Line Port Combination (PBX) - Conversion - Switch with Change			UEPRG	USACC		2.77	0.40								
	2-Wire Voice Grade Loop / Line Port Combination - Conversion - Subsequent Database Update						1.42									
ADDITIONAL NRCs																
	2-Wire Voice Grade Loop/ Line Port Combination (PBX) - Subsequent Activity			UEPRG	USAS2	0.00	0.00	0.00								
	Unbundled Miscellaneous Rate Element, Tag Loop at End User Premise			UEPRG	URETL		8.33	0.83								
OFF/ON PREMISES EXTENSION CHANNELS																
	Local Channel Voice grade, per termination		1	UEPRG	P2JHX	14.97	142.97	106.56								

UNBUNDLED NETWORK ELEMENTS - North Carolina

Attachment: 2 Ex. A

CATEGORY	RATE ELEMENTS	Interim	Zone	BCS	USOC	RATES ($)					Svc Order Submitted Elec per LSR	Svc Order Submitted Manually per LSR	Incremental Charge - Manual Svc Order vs. Electronic-1st	Incremental Charge - Manual Svc Order vs. Electronic-Add'l	Incremental Charge - Manual Svc Order vs. Electronic-Disc 1st	Incremental Charge - Manual Svc Order vs. Electronic-Disc Add'l
						Rec	Nonrecurring		Nonrecurring Disconnect		OSS Rates ($)					
							First	Add'l	First	Add'l	SOMEC	SOMAN	SOMAN	SOMAN	SOMAN	SOMAN
	Local Channel Voice grade, per termination		2	UEPRG	P2JHX	25.93	142.97	106.56								
	Local Channel Voice grade, per termination		3	UEPRG	P2JHX	40.81	142.97	106.56								
	Non-Wire Direct Serve Channel Voice Grade		1	UEPRG	SDD2X	14.62	252.06	109.08								
	Non-Wire Direct Serve Channel Voice Grade		2	UEPRG	SDD2X	23.86	126.03	54.54								
	Non-Wire Direct Serve Channel Voice Grade		3	UEPRG	SDD2X	36.40	126.03	54.54								
INTEROFFICE TRANSPORT																
	Interoffice Transport - Dedicated - 2 Wire Voice Grade - Facility Termination			UEPRG	U1TV2	18.00	137.48	52.58								
	Interoffice Transport - Dedicated - 2 Wire Voice Grade - Per Mile or Fraction Mile			UEPRG	U1TVM	0.0125	0.00	0.00								
2-WIRE VOICE GRADE LOOP WITH 2-WIRE LINE PORT (BUS - PBX)																
UNE Port/Loop Combination Rates																
	2-Wire VG Loop/Port Combo - Zone 1					14.03										
	2-Wire VG Loop/Port Combo - Zone 2					22.33										
	2-Wire VG Loop/Port Combo - Zone 3					33.61										
UNE Loop Rates																
	2-Wire Voice Grade Loop (SL 1) - Zone 1		1	UEPPX	UEPLX	10.75										
	2-Wire Voice Grade Loop (SL 1) - Zone 2		2	UEPPX	UEPLX	19.05										
	2-Wire Voice Grade Loop (SL 1) - Zone 3		3	UEPPX	UEPLX	30.33										
2-Wire Voice Grade Line Port Rates (BUS - PBX)																
	Line Side Unbundled Combination 2-Way PBX Trunk Port - Bus			UEPPX	UEPPC	3.28	164.57	128.16								
	Line Side Unbundled Outward PBX Trunk Port - Bus			UEPPX	UEPPO	3.28	164.57	128.16								
	Line Side Unbundled Incoming PBX Trunk Port - Bus			UEPPX	UEPP1	3.28	164.57	128.16								
	2-Wire Voice Unbundled PBX LD Terminal Ports			UEPPX	UEPLD	3.28	164.57	128.16								
	2-Wire Voice Unbundled 2-Way Combination PBX Usage Port			UEPPX	UEPXA	3.28	164.57	128.16								
	2-Wire Voice Unbundled PBX Toll Terminal Hotel Ports			UEPPX	UEPXB	3.28	164.57	128.16								
	2-Wire Voice Unbundled PBX LD DDD Terminals Port			UEPPX	UEPXC	3.28	164.57	128.16								
	2-Wire Voice Unbundled PBX LD Terminal Switchboard Port			UEPPX	UEPXD	3.28	164.57	128.16								
	2-Wire Voice Unbundled PBX LD Terminal Switchboard IDD Capable Port			UEPPX	UEPXE	3.28	164.57	128.16								
	2-Wire Voice Unbundled 2-Way PBX Hotel/Hospital Economy Administrative Calling Port			UEPPX	UEPXL	3.28	164.57	128.16								
	2-Wire Voice Unbundled 2-Way PBX Hotel/Hospital Economy Room Calling Port			UEPPX	UEPXM	3.28	164.57	128.16								
	2-Wire Voice Unbundled 1-Way Outgoing PBX Hotel/Hospital Discount Room Calling Port			UEPPX	UEPXO	3.28	164.57	128.16								
	2-Wire Voice Unbundled 1-Way Outgoing PBX Measured Port			UEPPX	UEPXS	3.28	164.57	128.16								
FEATURES																
	All Features Offered			UEPPX	UEPVF	3.40	0.00	0.00								
NONRECURRING CHARGES (NRCs) - CURRENTLY COMBINED																
	2-Wire Voice Grade Loop/ Line Port Combination (PBX) - Conversion - Switch-As-Is			UEPPX	USAC2		2.77	0.40								
	2-Wire Voice Grade Loop/ Line Port Combination (PBX) - Conversion - Switch with Change			UEPPX	USACC		2.77	0.40								
	2-Wire Voice Grade Loop / Line Port Combination - Conversion - Subsequent Database Update						1.42									
ADDITIONAL NRCs																
	2-Wire Voice Grade Loop/ Line Port Combination (PBX) - Subsequent Activity			UEPPX	USAS2	0.00	0.00	0.00								
	Unbundled Miscellaneous Rate Element, Tag Loop at End User Premise			UEPPX	URETL		8.33	0.83								
OFF/ON PREMISES EXTENSION CHANNELS																
	Local Channel Voice grade, per termination		1	UEPPX	P2JHX	14.97	142.97	106.56								
	Local Channel Voice grade, per termination		2	UEPPX	P2JHX	25.93	142.97	106.56								
	Local Channel Voice grade, per termination		3	UEPPX	P2JHX	40.81	142.97	106.56								
	Non-Wire Direct Serve Channel Voice Grade		1	UEPPX	SDD2X	14.62	252.06	109.08								
	Non-Wire Direct Serve Channel Voice Grade		2	UEPPX	SDD2X	23.86	126.03	54.54								
	Non-Wire Direct Serve Channel Voice Grade		3	UEPPX	SDD2X	36.40	126.03	54.54								
INTEROFFICE TRANSPORT																
	Interoffice Transport - Dedicated - 2 Wire Voice Grade - Facility Termination			UEPPX	U1TV2	18.00	137.48	52.58								
	Interoffice Transport - Dedicated - 2 Wire Voice Grade - Per Mile or Fraction Mile			UEPPX	U1TVM	0.0125	0.00	0.00								

UNBUNDLED NETWORK ELEMENTS - North Carolina

Attachment: 2 Ex. A

CATEGORY	RATE ELEMENTS	Interim	Zone	BCS	USOC	RATES ($)					Svc Order Submitted Elec per LSR	Svc Order Submitted Manually per LSR	Incremental Charge - Manual Svc Order vs. Electronic-1st	Incremental Charge - Manual Svc Order vs. Electronic-Add'l	Incremental Charge - Manual Svc Order vs. Electronic-Disc 1st	Incremental Charge - Manual Svc Order vs. Electronic-Disc Add'l
						Rec	Nonrecurring		Nonrecurring Disconnect		OSS Rates ($)					
							First	Add'l	First	Add'l	SOMEC	SOMAN	SOMAN	SOMAN	SOMAN	SOMAN
	2-WIRE VOICE GRADE LOOP WITH 2-WIRE ANALOG LINE COIN PORT															
	UNE Port/Loop Combination Rates															
	2-Wire VG Coin Port/Loop Combo – Zone 1					14.03										
	2-Wire VG Coin Port/Loop Combo – Zone 2					22.33										
	2-Wire VG Coin Port/Loop Combo – Zone 3					33.61										
	UNE Loop Rates															
	2-Wire Voice Grade Loop (SL1) - Zone 1		1	UEPCO	UEPLX	10.75										
	2-Wire Voice Grade Loop (SL1) - Zone 2		2	UEPCO	UEPLX	19.05										
	2-Wire Voice Grade Loop (SL1) - Zone 3		3	UEPCO	UEPLX	30.33										
	2-Wire Voice Grade Line Ports (COIN)															
	2-Wire Coin 2-Way without Operator Screening and without Blocking (NC)			UEPCO	UEPND	3.28	79.59	63.97								
	2-Wire Coin 2-Way with Operator Screening (NC)			UEPCO	UEPNC	3.28	79.59	63.97								
	2-Wire Coin 2-Way with Operator Screening and Blocking: 011, 900/976, 1+DDD (NC, TN)			UEPCO	UEPRP	3.28	79.59	63.97								
	2-Wire Coin 2-Way with Operator Screening and 011 Blocking (NC)			UEPCO	UEPNB	3.28	79.59	63.97								
	2-Wire Coin 2-Way with Operator Screening: 900 Blocking: 900/976, 1+DDD, 011+, and Local (NC, TN)			UEPCO	UEPCA	3.28	79.59	63.97								
	2-Wire Coin Outward with Operator Screening and 011 Blocking (NC)			UEPCO	UEPNE	3.28	79.59	63.97								
	2-Wire Coin Outward with Operator Screening and Blocking: 900/976, 1+DDD, 011+, and Local (NC)			UEPCO	UEPCL	3.28	79.59	63.97								
	2-Wire 2-Way Smartline with 900/976 (all states except LA)			UEPCO	UEPCK	3.28	79.59	63.97								
	2-Wire Coin Outward Smartline with 900/976 (all states except LA)			UEPCO	UEPCR	3.28	79.59	63.97								
	ADDITIONAL UNE COIN PORT/LOOP (RC)															
	UNE Coin Port/Loop Combo Usage (Flat Rate)			UEPCO	URECU	3.70	0.00	0.00	0.00	0.00						
	NONRECURRING CHARGES - CURRENTLY COMBINED															
	2-Wire Voice Grade Loop / Line Port Combination - Conversion - Switch-as-is			UEPCO	USAC2		2.77	0.40								
	2-Wire Voice Grade Loop / Line Port Combination - Conversion - Switch with change			UEPCO	USACC		2.77	0.40								
	2-Wire Voice Grade Loop / Line Port Combination - Conversion - Subsequent Database Update						1.42									
	ADDITIONAL NRCs															
	2-Wire Voice Grade Loop/Line Port Combination - Subsequent Activity			UEPCO	USAS2		0.00	0.00								
	Unbundled Miscellaneous Rate Element, Tag Loop at End User Premise			UEPCO	URETL		8.33	0.83								
	2-WIRE VOICE LOOP/ 2WIRE VOICE GRADE IO TRANSPORT/ 2-WIRE LINE PORT (RES)															
	UNE Port/Loop Combination Rates															
	2-Wire VG Loop/IO Tranport/Port Combo - Zone 1					18.16										
	2-Wire VG Loop/IO Tranport/Port Combo - Zone 2					29.12										
	2-Wire VG Loop/IO Tranport/Port Combo - Zone 3					44.00										
	UNE Loop Rates															
	2-Wire Voice Grade Loop (SL2) - Zone 1		1	UEPFR	UECF2	14.97										
	2-Wire Voice Grade Loop (SL2) - Zone 2		2	UEPFR	UECF2	25.93										
	2-Wire Voice Grade Loop (SL2) - Zone 3		3	UEPFR	UECF2	40.81										
	2-Wire Voice Grade Line Port Rates (Res)															
	2-Wire voice unbundled port - residence			UEPFR	UEPRL	3.19	225.00	225.00								
	2-Wire voice unbundled port with Caller ID - res			UEPFR	UEPRC	3.19	225.00	225.00								
	2-Wire voice unbundled port outgoing only - res			UEPFR	UEPRO	3.19	225.00	225.00								
	2-Wire voice unbundles res, low usage line port with Caller ID (LUM)			UEPFR	UEPAP	3.19	225.00	225.00								
	2-Wire voice res, low usage line port without Caller ID capabilty			UEPFR	UEPRZ	3.19	225.00	225.00								
	2-Wire voice North Carolina port without Caller ID capability - res			UEPFR	UEPRZ	3.19	225.00	225.00								
	2-Wire voice North Carolina port with Caller ID capability - res			UEPFR	UEPRY	3.19	225.00	225.00								
	INTEROFFICE TRANSPORT															
	Interoffice Transport - Dedicated - 2 Wire Voice Grade - Facility Termination			UEPFR	U1TV2	18.00	140.00	71.00								

CATEGORY	RATE ELEMENTS	Interim	Zone	BCS	USOC	RATES ($)					Svc Order Submitted Elec per LSR	Svc Order Submitted Manually per LSR	Incremental Charge - Manual Svc Order vs. Electronic-1st	Incremental Charge - Manual Svc Order vs. Electronic-Add'l	Incremental Charge - Manual Svc Order vs. Electronic-Disc 1st	Incremental Charge - Manual Svc Order vs. Electronic-Disc Add'l
						Rec	Nonrecurring		Nonrecurring Disconnect		OSS Rates ($)					
							First	Add'l	First	Add'l	SOMEC	SOMAN	SOMAN	SOMAN	SOMAN	SOMAN
	Interoffice Transport - Dedicated - 2 Wire Voice Grade - Per Mile or Fraction Mile			UEPFR	1L5XX	0.0125										
	FEATURES															
	All Features Offered			UEPFR	UEPVF	3.40	0.00	0.00								
	NONRECURRING CHARGES (NRCs) - CURRENTLY COMBINED															
	2-Wire Loop / Dedicated IO Transport / 2 Wire Line Port Combination - Conversion - Switch-as-is			UEPFR	USAC2		9.03	1.87								
	2-Wire Loop / Dedicated IO Transport / 2 Wire Line Port Combination - Conversion - Switch-With-Change			UEPFR	USACC		9.03	1.87								
	Unbundled Miscellaneous Rate Element, Tag Designed Loop at End User Premise			UEPFR	URETN		11.20	1.10								
	2-WIRE VOICE LOOP/ 2WIRE VOICE GRADE IO TRANSPORT/ 2-WIRE LINE PORT (BUS)															
	UNE Port/Loop Combination Rates															
	2-Wire VG Loop/IO Tranport/Port Combo - Zone 1					18.16										
	2-Wire VG Loop/IO Tranport/Port Combo - Zone 2					29.12										
	2-Wire VG Loop/IO Tranport/Port Combo - Zone 3					44.00										
	UNE Loop Rates															
	2-Wire Voice Grade Loop (SL2) - Zone 1		1	UEPFB	UECF2	14.97										
	2-Wire Voice Grade Loop (SL2) - Zone 2		2	UEPFB	UECF2	25.93										
	2-Wire Voice Grade Loop (SL2) - Zone 3		3	UEPFB	UECF2	40.81										
	2-Wire Voice Grade Line Port (Bus)															
	2-Wire voice unbundled port without Caller ID - bus			UEPFB	UEPBL	3.19	225.00	225.00								
	2-Wire voice unbundled port with Caller + E484 ID - bus			UEPFB	UEPBC	3.19	225.00	225.00								
	2-Wire voice unbundled port outgoing only - bus			UEPFB	UEPBO	3.19	225.00	225.00								
	2-Wire voice unbundled incoming only port with Caller ID - Bus			UEPFB	UEPB1	3.19	225.00	225.00								
	INTEROFFICE TRANSPORT															
	Interoffice Transport - Dedicated - 2 Wire Voice Grade - Facility Termination			UEPFB	U1TV2	18.00	140.00	71.00								
	Interoffice Transport - Dedicated - 2 Wire Voice Grade - Per Mile or Fraction Mile			UEPFB	1L5XX	0.0125										
	FEATURES															
	All Features Offered			UEPFB	UEPVF	3.40	0.00	0.00								
	NONRECURRING CHARGES (NRCs) - CURRENTLY COMBINED															
	2-Wire Loop / Dedicated IO Transport / 2 Wire Line Port Combination - Conversion - Switch-as-is			UEPFB	USAC2		9.03	1.87								
	2-Wire Loop / Dedicated IO Transport / 2 Wire Line Port Combination - Conversion - Switch with change			UEPFB	USACC		9.03	1.87								
	Unbundled Miscellaneous Rate Element, Tag Designed Loop at End User Premise			UEPFB	URETN		11.20	1.10								
	2-WIRE VOICE LOOP/ 2WIRE VOICE GRADE IO TRANSPORT/ 2-WIRE LINE PORT (PBX)															
	UNE Port/Loop Combination Rates															
	2-Wire VG Loop/IO Tranport/Port Combo - Zone 1					18.16										
	2-Wire VG Loop/IO Tranport/Port Combo - Zone 2					29.12										
	2-Wire VG Loop/IO Tranport/Port Combo - Zone 3					44.00										
	UNE Loop Rates															
	2-Wire Voice Grade Loop (SL2) - Zone 1		1	UEPFP	UECF2	14.97										
	2-Wire Voice Grade Loop (SL2) - Zone 2		2	UEPFP	UECF2	25.93										
	2-Wire Voice Grade Loop (SL2) - Zone 3		3	UEPFP	UECF2	40.81										
	2-Wire Voice Grade Line Port Rates (BUS - PBX)															
	Line Side Unbundled Combination 2-Way PBX Trunk Port - Bus			UEPFP	UEPPC	3.18	225.00	225.00								
	Line Side Unbundled Outward PBX Trunk Port - Bus			UEPFP	UEPPO	3.18	225.00	225.00								
	Line Side Unbundled Incoming PBX Trunk Port - Bus			UEPFP	UEPP1	3.18	225.00	225.00								
	2-Wire Voice Unbundled PBX LD Terminal Ports			UEPFP	UEPLD	3.18	225.00	225.00								
	2-Wire Voice Unbundled 2-Way Combination PBX Usage Port			UEPFP	UEPXA	3.18	225.00	225.00								
	2-Wire Voice Unbundled PBX Toll Terminal Hotel Ports			UEPFP	UEPXB	3.18	225.00	225.00								
	2-Wire Voice Unbundled PBX LD DDD Terminals Port			UEPFP	UEPXC	3.18	225.00	225.00								
	2-Wire Voice Unbundled PBX LD Terminal Switchboard Port			UEPFP	UEPXD	3.18	225.00	225.00								
	2-Wire Voice Unbundled PBX LD Terminal Switchboard IDD Capable Port			UEPFP	UEPXE	3.18	225.00	225.00								
	2-Wire Voice Unbundled 2-Way PBX Hotel/Hospital Economy Administrative Calling Port			UEPFP	UEPXL	3.18	225.00	225.00								
	2-Wire Voice Unbundled 2-Way PBX Hotel/Hospital Economy Room Calling Port			UEPFP	UEPXM	3.18	225.00	225.00								

CATEGORY	RATE ELEMENTS	Interim	Zone	BCS	USOC	RATES ($) Rec	Nonrecurring First	Nonrecurring Add'l	Nonrecurring Disconnect First	Nonrecurring Disconnect Add'l	Svc Order Submitted Elec per LSR	Svc Order Submitted Manually per LSR	Incremental Charge - Manual Svc Order vs. Electronic-1st	Incremental Charge - Manual Svc Order vs. Electronic-Add'l	Incremental Charge - Manual Svc Order vs. Electronic-Disc 1st	Incremental Charge - Manual Svc Order vs. Electronic-Disc Add'l
											OSS Rates ($)					
											SOMEC	SOMAN	SOMAN	SOMAN	SOMAN	SOMAN
	2-Wire Voice Unbundled 1-Way Outgoing PBX Hotel/Hospital Discount Room Calling Port			UEPFP	UEPXO	3.18	225.00	225.00								
	2-Wire Voice Unbundled 1-Way Outgoing PBX Measured Port			UEPFP	UEPXS	3.18	225.00	225.00								
INTEROFFICE TRANSPORT																
	Interoffice Transport - Dedicated - 2 Wire Voice Grade - Facility Termination			UEPFP	U1TV2	18.00	140.00	71.00								
	Interoffice Transport - Dedicated - 2 Wire Voice Grade - Per Mile or Fraction Mile			UEPFP	1L5XX	0.0125										
FEATURES																
	All Features Offered			UEPFP	UEPVF	3.40	0.00	0.00								
NONRECURRING CHARGES (NRCs) - CURRENTLY COMBINED																
	2-Wire Loop / Dedicated IO Transport / 2 Wire Line Port Combination - Conversion - Switch-as-is			UEPFP	USAC2		9.03	1.87								
	2-Wire Loop / Dedicated IO Transport / 2 Wire Line Port Combination - Conversion - Switch with change			UEPFP	USACC		9.03	1.87								
	Unbundled Miscellaneous Rate Element, Tag Designed Loop at End User Premise			UEPFP	URETN		11.20	1.10								
2-WIRE VOICE GRADE LOOP- BUS ONLY - WITH 2-WIRE DID TRUNK PORT																
UNE Port/Loop Combination Rates																
	2-Wire VG Loop/2-Wire DID Trunk Port Combo - UNE Zone 1					21.97										
	2-Wire VG Loop/2-Wire DID Trunk Port Combo - UNE Zone 2					28.80										
	2-Wire VG Loop/2-Wire DID Trunk Port Combo - UNE Zone 3					38.08										
UNE Loop Rates																
	2-Wire Analog Voice Grade Loop - (SL2) - UNE Zone 1		1	UEPPX	UECD1	8.85										
	2-Wire Analog Voice Grade Loop - (SL2) - UNE Zone 2		2	UEPPX	UECD1	15.68										
	2-Wire Analog Voice Grade Loop - (SL2) - UNE Zone 3		3	UEPPX	UECD1	24.96										
UNE Port Rate																
	Exchange Ports - 2-Wire DID Port			UEPPX	UEPD1	13.12	224.81	188.40								
NONRECURRING CHARGES - CURRENTLY COMBINED																
	2-Wire Voice Grade Loop / 2-Wire DID Trunk Port Combination - Switch-as-is			UEPPX	USAC1		13.26	8.39								
	2-Wire Voice Grade Loop / 2-Wire DID Trunk Port Conversion with BellSouth Allowable Changes			UEPPX	USA1C		13.26	8.39								
ADDITIONAL NRCs																
	2-Wire DID Subsequent Activity - Add Trunks, Per Trunk			UEPPX	USAS1		53.49									
	Unbundled Miscellaneous Rate Element, Tag Designed Loop at End User Premise			UEPPX	URETN		11.20	1.10								
Telephone Number/Trunk Group Establisment Charges																
	DID Trunk Termination (One Per Port)			UEPPX	NDT	0.00	0.00	0.00								
	DID Numbers, Establish Trunk Group and Provide First Group of 20 DID Numbers			UEPPX	NDZ	0.00	0.00	0.00								
	Additional DID Numbers for each Group of 20 DID Numbers			UEPPX	ND4	0.00	0.00	0.00								
	DID Numbers, Non- consecutive DID Numbers , Per Number			UEPPX	ND5	0.00	0.00	0.00								
	Reserve Non-Consecutive DID numbers			UEPPX	ND6	0.00	0.00	0.00								
	Reserve DID Numbers			UEPPX	NDV	0.00	0.00	0.00								
2-WIRE ISDN DIGITAL GRADE LOOP WITH 2-WIRE ISDN DIGITAL LINE SIDE PORT																
UNE Port/Loop Combination Rates																
	2W ISDN Digital Grade Loop/2W ISDN Digital Line Side Port - UNE Zone 1					39.84										
	2W ISDN Digital Grade Loop/2W ISDN Digital Line Side Port - UNE Zone 2					51.01										
	2W ISDN Digital Grade Loop/2W ISDN Digital Line Side Port - UNE Zone 3					66.18										
UNE Loop Rates																
	2-Wire ISDN Digital Grade Loop - UNE Zone 1		1	UEPPB UEPPR	USL2X	14.47										
	2-Wire ISDN Digital Grade Loop - UNE Zone 2		2	UEPPB UEPPR	USL2X	25.64										
	2-Wire ISDN Digital Grade Loop - UNE Zone 3		3	UEPPB UEPPR	USL2X	40.81										
UNE Port Rate																
	Exchange Port - 2-Wire ISDN Line Side Port			UEPPR	UEPPR	25.37	388.20	302.77								
	Exchange Port - 2-Wire ISDN Line Side Port			UEPPB	UEPPB	25.37	388.20	302.77								
NONRECURRING CHARGES - CURRENTLY COMBINED																
	2-Wire ISDN Digital Grade Loop / 2-Wire ISDN Line Side Port Combination - Conversion			UEPPB UEPPR	USACB	0.00	174.35	174.35								

UNBUNDLED NETWORK ELEMENTS - North Carolina

Attachment: 2 Ex. A

CATEGORY	RATE ELEMENTS	Interim	Zone	BCS	USOC	RATES ($) Rec	Nonrecurring First	Nonrecurring Add'l	Nonrecurring Disconnect First	Nonrecurring Disconnect Add'l	Svc Order Submitted Elec per LSR	Svc Order Submitted Manually per LSR	Incremental Charge - Manual Svc Order vs. Electronic- 1st	Incremental Charge - Manual Svc Order vs. Electronic- Add'l	Incremental Charge - Manual Svc Order vs. Electronic- Disc 1st	Incremental Charge - Manual Svc Order vs. Electronic- Disc Add'l
											OSS Rates ($)					
											SOMEC	SOMAN	SOMAN	SOMAN	SOMAN	SOMAN
ADDITIONAL NRCs																
	Unbundled Miscellaneous Rate Element, Tag Designed Loop at End User Premise			UEPPB UEPPR	URETN		11.20	1.10								
	Unbundled Miscellaneous Rate Element, Tag Loop at End User Premise			UEPPB UEPPR	URETL		8.33	0.83								
B-CHANNEL USER PROFILE ACCESS:																
	CVS/CSD (DMS/5ESS)			UEPPB UEPPR	U1UCA	0.00	0.00	0.00								
	CVS (EWSD)			UEPPB UEPPR	U1UCB	0.00	0.00	0.00								
	CSD			UEPPB UEPPR	U1UCC	0.00	0.00	0.00								
B-CHANNEL AREA PLUS USER PROFILE ACCESS: (AL,KY,LA,MS SC,MS, & TN)																
USER TERMINAL PROFILE																
	User Terminal Profile (EWSD only)			UEPPB UEPPR	U1UMA	0.00	0.00	0.00								
VERTICAL FEATURES																
	All Vertical Features - One per Channel B User Profile			UEPPB UEPPR	UEPVF	3.40	0.00	0.00								
INTEROFFICE CHANNEL MILEAGE																
	Interoffice Channel mileage each, including first mile and facilities termination			UEPPB UEPPR	M1GNC	18.0282	137.48	52.58								
	Interoffice Channel mileage each, additional mile			UEPPB UEPPR	M1GNM	0.0282	0.00	0.00								
UNBUNDLED CENTREX PORT/LOOP COMBINATIONS - COST BASED RATES																
UNE-P CENTREX - 5ESS (Valid in All States)																
2-Wire VG Loop/2-Wire Voice Grade Port (Centrex) Combo																
UNE Port/Loop Combination Rates (Non-Design)																
	2-Wire VG Loop/2-Wire Voice Grade Port (Centrex) Port Combo - Non-Design					14.03										
	2-Wire VG Loop/2-Wire Voice Grade Port (Centrex)Port Combo - Non-Design					22.33										
	2-Wire VG Loop/2-Wire Voice Grade Port (Centrex)Port Combo - Non-Design					33.61										
UNE Port/Loop Combination Rates (Design)																
	2-Wire VG Loop/2-Wire Voice Grade Port (Centrex) Port Combo - Design					18.25										
	2-Wire VG Loop/2-Wire Voice Grade Port (Centrex)Port Combo - Design					29.21										
	2-Wire VG Loop/2-Wire Voice Grade Port (Centrex)Port Combo - Design					44.09										
UNE Loop Rate																
	2-Wire Voice Grade Loop (SL 1) - Zone 1		1	UEP95	UECS1	10.75										
	2-Wire Voice Grade Loop (SL 1) - Zone 2		2	UEP95	UECS1	19.05										
	2-Wire Voice Grade Loop (SL 1) - Zone 3		3	UEP95	UECS1	30.33										
	2-Wire Voice Grade Loop (SL 2) - Zone 1		1	UEP95	UECS2	14.97										
	2-Wire Voice Grade Loop (SL 2) - Zone 2		2	UEP95	UECS2	25.93										
	2-Wire Voice Grade Loop (SL 2) - Zone 3		3	UEP95	UECS2	40.81										
UNE Port Rate																
All States																
	2-Wire Voice Grade Port (Centrex) Basic Local Area			UEP95	UEPYA	3.28	79.59	63.97								
	2-Wire Voice Grade Port (Centrex 800 termination)			UEP95	UEPYB	3.28	79.59	63.97								
	2-Wire Voice Grade Port (Centrex with Caller ID)1Basic Local Area			UEP95	UEPYH	3.28	79.59	63.97								
	2-Wire Voice Grade Port (Centrex from diff Serving Wire Center)2,3 Basic Local Area			UEP95	UEPYM	3.28	164.57	128.16								
	2-Wire Voice Grade Port, Diff Serving Wire Center 2,3 - 800 Service Term - Basic Local Area			UEP95	UEPYZ	3.28										
	2-Wire Voice Grade Port terminated in on Megalink or equivalent - Basic Local Area			UEP95	UEPY9	3.28	79.59	63.97								
	2-Wire Voice Grade Port Terminated on 800 Service Term - Basic Local Area			UEP95	UEPY2	3.28	79.59	63.97								
NC Only																
	2-Wire Voice Grade Port (Centrex)			UEP95	UEPUA	3.28	79.59	63.97								
	2-Wire Voice Grade Port (Centrex 800 termination)			UEP95	UEPUB	3.28	79.59	63.97								
	2-Wire Voice Grade Port (Centrex with Caller ID)1			UEP95	UEPUH	3.28	79.59	63.97								
	2-Wire Voice Grade Port (Centrex from diff Serving Wire Center)2,3			UEP95	UEPUM	3.28	164.57	128.16								
	2-Wire Voice Grade Port, Diff Serving Wire Center - 800 Service Term 2,3			UEP95	UEPUZ	3.28	164.57	128.16								

CATEGORY	RATE ELEMENTS	Interim	Zone	BCS	USOC	RATES ($)					Svc Order Submitted Elec per LSR	Svc Order Submitted Manually per LSR	Incremental Charge - Manual Svc Order vs. Electronic-1st	Incremental Charge - Manual Svc Order vs. Electronic-Add'l	Incremental Charge - Manual Svc Order vs. Electronic-Disc 1st	Incremental Charge - Manual Svc Order vs. Electronic-Disc Add'l
						Rec	Nonrecurring		Nonrecurring Disconnect		OSS Rates ($)					
							First	Add'l	First	Add'l	SOMEC	SOMAN	SOMAN	SOMAN	SOMAN	SOMAN
	2-Wire Voice Grade Port terminated in on Megalink or equivalent			UEP95	UEPU9	3.28	79.59	63.97								
	2-Wire Voice Grade Port Terminated on 800 Service Term			UEP95	UEPU2	3.28	79.59	63.97								
Local Switching																
	Centrex Intercom Funtionality, per port			UEP95	URECS	0.903										
Features																
	All Standard Features Offered, per port			UEP95	UEPVF	3.40										
	All Select Features Offered, per port			UEP95	UEPVS	0.00	457.83									
	All Centrex Control Features Offered, per port			UEP95	UEPVC	3.40										
NARS																
	Unbundled Network Access Register - Combination			UEP95	UARCX	0.00	0.00	0.00	0.00	0.00						
	Unbundled Network Access Register - Indial			UEP95	UAR1X	0.00	0.00	0.00	0.00	0.00						
	Unbundled Network Access Register - Outdial			UEP95	UAROX	0.00	0.00	0.00	0.00	0.00						
Miscellaneous Terminations																
2-Wire Trunk Side																
	Trunk Side Terminations, each			UEP95	CEND6	12.36										
4-Wire Digital (1.544 Megabits)																
	DS1 Circuit Terminations, each			UEP95	M1HD1	123.65										
	DS0 Channels Activated, each			UEP95	M1HDO	0.00	28.81									
Interoffice Channel Mileage - 2-Wire																
	Interoffice Channel Facilities Termination			UEP95	M1GBC	18.00										
	Interoffice Channel mileage, per mile or fraction of mile			UEP95	M1GBM	0.0282										
Feature Activations (DS0) Centrex Loops on Channelized DS1 Service																
D4 Channel Bank Feature Activations																
	Feature Activation on D-4 Channel Bank Centrex Loop Slot			UEP95	1PQWS	0.65										
	Feature Activation on D-4 Channel Bank FX line Side Loop Slot			UEP95	1PQW6	0.65										
	Feature Activation on D-4 Channel Bank FX Trunk Side Loop Slot			UEP95	1PQW7	0.65										
	Feature Activation on D-4 Channel Bank Centrex Loop Slot - Different Wire Center			UEP95	1PQWP	0.65										
	Feature Activation on D-4 Channel Bank Private Line Loop Slot			UEP95	1PQWV	0.65										
	Feature Activation on D-4 Channel Bank Tjie Line/Trunk Loop Slot			UEP95	1PQWQ	0.65										
	Feature Activation on D-4 Channel Bank WATS Loop Slot			UEP95	1PQWA	0.65										
Non-Recurring Charges (NRC) Associated with UNE-P Centrex																
	NRC Conversion Currently Combined Switch-As-Is with allowed changes, per port			UEP95	USAC2		2.77	0.40								
	New Centrex Standard Common Block			UEP95	M1ACS	0.00	695.11									
	New Centrex Customized Common Block			UEP95	M1ACC	0.00	695.11									
	NAR Establishment Charge, Per Occasion			UEP95	URECA	0.00	72.73									
Additional Non-Recurring Charges (NRC)																
	Unbundled Miscellaneous Rate Element, Tag Loop at End Use Premise			UEP95	URETL		8.33	0.83								
	Unbundled Miscellaneous Rate Element, Tag Design Loop at End Use Premise			UEP95	URETN		11.20	1.10								
UNE-P CENTREX - DMS100 (Valid in All States)																
2-Wire VG Loop/2-Wire Voice Grade Port (Centrex) Combo																
UNE Port/Loop Combination Rates (Non-Design)																
	2-Wire VG Loop/2-Wire Voice Grade Port (Centrex) Port Combo - Non-Design					14.03										
	2-Wire VG Loop/2-Wire Voice Grade Port (Centrex)Port Combo - Non-Design					22.33										
	2-Wire VG Loop/2-Wire Voice Grade Port (Centrex)Port Combo - Non-Design					33.61										
UNE Port/Loop Combination Rates (Design)																
	2-Wire VG Loop/2-Wire Voice Grade Port (Centrex) Port Combo - Design					18.25										
	2-Wire VG Loop/2-Wire Voice Grade Port (Centrex)Port Combo - Design					29.21										
	2-Wire VG Loop/2-Wire Voice Grade Port (Centrex)Port Combo - Design					44.09										
UNE Loop Rate																

UNBUNDLED NETWORK ELEMENTS - North Carolina

Attachment: 2 Ex. A

CATEGORY	RATE ELEMENTS	Interim	Zone	BCS	USOC	RATES ($)					Svc Order Submitted Elec per LSR	Svc Order Submitted Manually per LSR	Incremental Charge - Manual Svc Order vs. Electronic-1st	Incremental Charge - Manual Svc Order vs. Electronic-Add'l	Incremental Charge - Manual Svc Order vs. Electronic-Disc 1st	Incremental Charge - Manual Svc Order vs. Electronic-Disc Add'l
						Rec	Nonrecurring		Nonrecurring Disconnect		OSS Rates ($)					
							First	Add'l	First	Add'l	SOMEC	SOMAN	SOMAN	SOMAN	SOMAN	SOMAN
	2-Wire Voice Grade Loop (SL 1) - Zone 1		1	UEP9D	UECS1	10.75										
	2-Wire Voice Grade Loop (SL 1) - Zone 2		2	UEP9D	UECS1	19.05										
	2-Wire Voice Grade Loop (SL 1) - Zone 3		3	UEP9D	UECS1	30.33										
	2-Wire Voice Grade Loop (SL 2) - Zone 1		1	UEP9D	UECS2	14.97										
	2-Wire Voice Grade Loop (SL 2) - Zone 2		2	UEP9D	UECS2	25.93										
	2-Wire Voice Grade Loop (SL 2) - Zone 3		3	UEP9D	UECS2	40.81										
UNE Port Rate																
ALL STATES																
	2-Wire Voice Grade Port (Centrex) Basic Local Area			UEP9D	UEPYA	3.28	79.59	63.97								
	2-Wire Voice Grade Port (Centrex 800 termination)Basic Local Area			UEP9D	UEPYB	3.28	79.59	63.97								
	2-Wire Voice Grade Port (Centrex / EBS-PSET)3Basic Local Area			UEP9D	UEPYC	3.28	79.59	63.97								
	2-Wire Voice Grade Port (Centrex / EBS-M5009)3Basic Local Area			UEP9D	UEPYD	3.28	79.59	63.97								
	2-Wire Voice Grade Port (Centrex / EBS-M5209))3 Basic Local Area			UEP9D	UEPYE	3.28	79.59	63.97								
	2-Wire Voice Grade Port (Centrex / EBS-M5112))3 Basic Local Area			UEP9D	UEPYF	3.28	79.59	63.97								
	2-Wire Voice Grade Port (Centrex / EBS-M5312))3Basic Local Area			UEP9D	UEPYG	3.28	79.59	63.97								
	2-Wire Voice Grade Port (Centrex / EBS-M5008))3 Basic Local Area			UEP9D	UEPYT	3.28	79.59	63.97								
	2-Wire Voice Grade Port (Centrex / EBS-M5208))3 Basic Local Area			UEP9D	UEPYU	3.28	79.59	63.97								
	2-Wire Voice Grade Port (Centrex / EBS-M5216))3 Basic Local Area			UEP9D	UEPYV	3.28	79.59	63.97								
	2-Wire Voice Grade Port (Centrex / EBS-M5316))3 Basic Local Area			UEP9D	UEPY3	3.28	79.59	63.97								
	2-Wire Voice Grade Port (Centrex with Caller ID) Basic Local Area			UEP9D	UEPYH	3.28	79.59	63.97								
	2-Wire Voice Grade Port (Centrex/Caller ID/Msg Wtg Lamp Indication))4 Basic Local Area			UEP9D	UEPYW	3.28	79.59	63.97								
	2-Wire Voice Grade Port (Centrex/Msg Wtg Lamp Indication))4 Basic Local Area			UEP9D	UEPYJ	3.28	79.59	63.97								
	2-Wire Voice Grade Port (Centrex from diff Serving Wire Center) 2,3-Basic Local Area			UEP9D	UEPYM	3.28	164.57	128.16								
	2-Wire Voice Grade Port (Centrex/differ SWC /EBS-PSET)2,3,4 Basic Local Area			UEP9D	UEPYO	3.28	164.57	128.16								
	2-Wire Voice Grade Port (Centrex/differ SWC /EBS-M5009)2,3,4 Basic Local Area			UEP9D	UEPYP	3.28	164.57	128.16								
	2-Wire Voice Grade Port (Centrex/differ SWC /EBS-5209)2,3,4 Basic Local Area			UEP9D	UEPYQ	3.28	164.57	128.16								
	2-Wire Voice Grade Port (Centrex/differ SWC /EBS-M5112)2,3,4 Basic Local Area			UEP9D	UEPYR	3.28	164.57	128.16								
	2-Wire Voice Grade Port (Centrex/differ SWC /EBS-M5312)2,3,4 Basic Local Area			UEP9D	UEPYS	3.28	164.57	128.16								
	2-Wire Voice Grade Port (Centrex/differ SWC /EBS-M5008)2,3,4 Basic Local Area			UEP9D	UEPY4	3.28	164.57	128.16								
	2-Wire Voice Grade Port (Centrex/differ SWC /EBS-M5208)2, 3 Basic Local Area			UEP9D	UEPY5	3.28	164.57	128.16								
	2-Wire Voice Grade Port (Centrex/differ SWC /EBS-M5216)2,3,4 Basic Local Area			UEP9D	UEPY6	3.28	164.57	128.16								
	2-Wire Voice Grade Port (Centrex/differ SWC /EBS-M5316)2,3,4 Basic Local Area			UEP9D	UEPY7	3.28	164.57	128.16								
	2-Wire Voice Grade Port, Diff Serving Wire Center - 800 Service Term 2,3			UEP9D	UEPYZ	3.28	164.57	128.16								
	2-Wire Voice Grade Port terminated in on Megalink or equivalent Basic Local Area			UEP9D	UEPY9	3.28	79.59	63.97								
	2-Wire Voice Grade Port Terminated on 800 Service Term Basic Local Area			UEP9D	UEPY2	3.28	79.59	63.97								
NC Only																
	2-Wire Voice Grade Port (Centrex)			UEP9D	UEPUA	3.28	79.59	63.97								
	2-Wire Voice Grade Port (Centrex 800 termination)			UEP9D	UEPUB	3.28	79.59	63.97								

CATEGORY	RATE ELEMENTS	Interim	Zone	BCS	USOC	RATES ($)					Svc Order Submitted Elec per LSR	Svc Order Submitted Manually per LSR	Incremental Charge - Manual Svc Order vs. Electronic-1st	Incremental Charge - Manual Svc Order vs. Electronic-Add'l	Incremental Charge - Manual Svc Order vs. Electronic-Disc 1st	Incremental Charge - Manual Svc Order vs. Electronic-Disc Add'l
						Rec	Nonrecurring		Nonrecurring Disconnect		OSS Rates ($)					
							First	Add'l	First	Add'l	SOMEC	SOMAN	SOMAN	SOMAN	SOMAN	SOMAN
	2-Wire Voice Grade Port (Centrex / EBS-PSET)4			UEP9D	UEPUC	3.28	79.59	63.97								
	2-Wire Voice Grade Port (Centrex / EBS-M5009)4			UEP9D	UEPUD	3.28	79.59	63.97								
	2-Wire Voice Grade Port (Centrex / EBS-M5209)4			UEP9D	UEPUE	3.28	79.59	63.97								
	2-Wire Voice Grade Port (Centrex / EBS-M5112)4			UEP9D	UEPUF	3.28	79.59	63.97								
	2-Wire Voice Grade Port (Centrex / EBS-M5312)4			UEP9D	UEPUG	3.28	79.59	63.97								
	2-Wire Voice Grade Port (Centrex / EBS-M5008)4			UEP9D	UEPUT	3.28	79.59	63.97								
	2-Wire Voice Grade Port (Centrex / EBS-M5208)4			UEP9D	UEPUU	3.28	79.59	63.97								
	2-Wire Voice Grade Port (Centrex / EBS-M5216)4			UEP9D	UEPUV	3.28	79.59	63.97								
	2-Wire Voice Grade Port (Centrex / EBS-M5316)4			UEP9D	UEPU3	3.28	79.59	63.97								
	2-Wire Voice Grade Port (Centrex with Caller ID)			UEP9D	UEPUH	3.28	79.59	63.97								
	2-Wire Voice Grade Port (Centrex/Caller ID/Msg Wtg Lamp Indication)4			UEP9D	UEPUW	3.28	79.59	63.97								
	2-Wire Voice Grade Port (Centrex/Msg Wtg Lamp Indication)4			UEP9D	UEPUJ	3.28	79.59	63.97								
	2-Wire Voice Grade Port (Centrex from diff Serving Wire Center) 2,3			UEP9D	UEPUM	3.28	164.57	128.16								
	2-Wire Voice Grade Port (Centrex/differ SWC /EBS-PSET)2,3,4			UEP9D	UEPUO	3.28	164.57	128.16								
	2-Wire Voice Grade Port (Centrex/differ SWC /EBS-M5009)2,3,4			UEP9D	UEPUP	3.28	164.57	128.16								
	2-Wire Voice Grade Port (Centrex/differ SWC /EBS-5209)2,3,4			UEP9D	UEPUQ	3.28	164.57	128.16								
	2-Wire Voice Grade Port (Centrex/differ SWC /EBS-M5112)2,3,4			UEP9D	UEPUR	3.28	164.57	128.16								
	2-Wire Voice Grade Port (Centrex/differ SWC /EBS-M5312)2,3,4			UEP9D	UEPUS	3.28	164.57	128.16								
	2-Wire Voice Grade Port (Centrex/differ SWC /EBS-M5008)2,3,4			UEP9D	UEPU4	3.28	164.57	128.16								
	2-Wire Voice Grade Port (Centrex/differ SWC /EBS-M5208)2,3,4			UEP9D	UEPU5	3.28	164.57	128.16								
	2-Wire Voice Grade Port (Centrex/differ SWC /EBS-M5216)2,3,4			UEP9D	UEPU6	3.28	164.57	128.16								
	2-Wire Voice Grade Port (Centrex/differ SWC /EBS-M5316)2,3,4			UEP9D	UEPU7	3.28	164.57	128.16								
	2-Wire Voice Grade Port, Diff Serving Wire Center - 800 Service Term 2,3			UEP9D	UEPUZ	3.28	164.57	128.16								
	2-Wire Voice Grade Port terminated in on Megalink or equivalent			UEP9D	UEPU9	3.28	79.59	63.97								
	2-Wire Voice Grade Port Terminated on 800 Service Term			UEP9D	UEPU2	3.28	79.59	63.97								
Local Switching																
	Centrex Intercom Funtionality, per port			UEP9D	URECS	0.903										
Features																
	All Standard Features Offered, per port			UEP9D	UEPVF	3.40										
	All Select Features Offered, per port			UEP9D	UEPVS	0.00	457.83									
	All Centrex Control Features Offered, per port			UEP9D	UEPVC	3.40										
NARS																
	Unbundled Network Access Register - Combination			UEP9D	UARCX	0.00	0.00	0.00	0.00	0.00						
	Unbundled Network Access Register - Inward			UEP9D	UAR1X	0.00	0.00	0.00	0.00	0.00						
	Unbundled Network Access Register - Outdial			UEP9D	UAROX	0.00	0.00	0.00	0.00	0.00						
Miscellaneous Terminations																
2-Wire Trunk Side																
	Trunk Side Terminations, each			UEP9D	CEND6	12.36										
4-Wire Digital (1.544 Megabits)																
	DS1 Circuit Terminations, each			UEP9D	M1HD1	123.65										
	DS0 Channels Activiated per Channel			UEP9D	M1HDO	0.00	28.81									
Interoffice Channel Mileage - 2-Wire																
	Interoffice Channel Facilities Termination			UEP9D	M1GBC	18.00										
	Interoffice Channel mileage, per mile or fraction of mile			UEP9D	M1GBM	0.0282										
Feature Activations (DS0) Centrex Loops on Channelized DS1 Service																
D4 Channel Bank Feature Activations																
	Feature Activation on D-4 Channel Bank Centrex Loop Slot			UEP9D	1PQWS	0.65										
	Feature Activation on D-4 Channel Bank FX line Side Loop Slot			UEP9D	1PQW6	0.65										
	Feature Activation on D-4 Channel Bank FX Trunk Side Loop Slot			UEP9D	1PQW7	0.65										

UNBUNDLED NETWORK ELEMENTS - North Carolina														Attachment: 2 Ex. A				
CATEGORY	RATE ELEMENTS	Interim	Zone	BCS	USOC	RATES ($)					Svc Order Submitted Elec per LSR	Svc Order Submitted Manually per LSR	Incremental Charge - Manual Svc Order vs. Electronic-1st	Incremental Charge - Manual Svc Order vs. Electronic-Add'l	Incremental Charge - Manual Svc Order vs. Electronic-Disc 1st	Incremental Charge - Manual Svc Order vs. Electronic-Disc Add'l	
						Rec	Nonrecurring		Nonrecurring Disconnect		OSS Rates ($)						
							First	Add'l	First	Add'l	SOMEC	SOMAN	SOMAN	SOMAN	SOMAN	SOMAN	
	Feature Activation on D-4 Channel Bank Centrex Loop Slot - Different Wire Center			UEP9D	1PQWP	0.65											
	Feature Activation on D-4 Channel Bank Private Line Loop Slot			UEP9D	1PQWV	0.65											
	Feature Activation on D-4 Channel Bank Tjie Line/Trunk Loop Slot			UEP9D	1PQWQ	0.65											
	Feature Activation on D-4 Channel Bank WATS Loop Slot			UEP9D	1PQWA	0.65											
Non-Recurring Charges (NRC) Associated with UNE-P Centrex																	
	NRC Conversion Currently Combined Switch-As-Is with allowed changes, per port			UEP9D	USAC2		2.77	0.40									
	New Centrex Standard Common Block			UEP9D	M1ACS	0.00	695.11										
	New Centrex Customized Common Block			UEP9D	M1ACC	0.00	695.11										
	NAR Establishment Charge, Per Occasion			UEP9D	URECA	0.00	72.73										
Additional Non-Recurring Charges (NRC)																	
	Unbundled Miscellaneous Rate Element, Tag Loop at End Use Premise			UEP9D	URETL		8.33	0.83									
	Unbundled Miscellaneous Rate Element, Tag Design Loop at End Use Premise			UEP9D	URETN		11.20	1.10									
Note 1 - Required Port for Centrex Control in 1AESS, 5ESS & EWSD																	
Note 2 - Requres Interoffice Channel Mileage																	
Note 3 - Installation is combination of Installation charge for SL2 Loop and Port																	
Note 4 - Requires Specific Customer Premises Equipment																	
Note: Rates displaying an "I" in Interim column are interim as a result of a Commission order.																	

UNBUNDLED NETWORK ELEMENTS - South Carolina														Attachment: 2 Ex. A				
CATEGORY		RATE ELEMENTS	Interim	Zone	BCS	USOC	RATES ($)					Svc Order Submitted Elec per LSR	Svc Order Submitted Manually per LSR	Incremental Charge - Manual Svc Order vs. Electronic-1st	Incremental Charge - Manual Svc Order vs. Electronic-Add'l	Incremental Charge - Manual Svc Order vs. Electronic-Disc 1st	Incremental Charge - Manual Svc Order vs. Electronic-Disc Add'l	
							Rec	Nonrecurring		Nonrecurring Disconnect		OSS Rates ($)						
								First	Add'l	First	Add'l	SOMEC	SOMAN	SOMAN	SOMAN	SOMAN	SOMAN	
	The "Zone" shown in the sections for stand-alone loops or loops as part of a combination refers to Geographically Deaveraged UNE Zones. To view Geographically Deaveraged UNE Zone Designations by Central Office, refer to internet Website: http://www.interconnection.bellsouth.com/become_a_clec/html/interconnection.htm																	
OPERATIONAL SUPPORT SYSTEMS (OSS) - "REGIONAL RATES"																		
	NOTE: (1) CLEC should contact its contract negotiator if it prefers the "state specific" OSS charges as ordered by the State Commissions. The OSS charges currently contained in this rate exhibit are the BellSouth "regional" service ordering charges. CLEC may elect either the state specific Commission ordered rates for the service ordering charges, or CLEC may elect the regional service ordering charge, however, CLEC can not obtain a mixture of the two regardless if CLEC has a interconnection contract established in each of the 9 states.																	
	NOTE: (2) Any element that can be ordered electronically will be billed according to the SOMEC rate listed in this category. Please refer to BellSouth's Local Ordering Handbook (LOH) to determine if a product can be ordered electronically. For those elements that cannot be ordered electronically at present per the LOH, the listed SOMEC rate in this category reflects the charge that would be billed to a CLEC once electronic ordering capabilities come on-line for that element. Otherwise, the manual ordering charge, SOMAN, will be applied to a CLECs bill when it submits an LSR to BellSouth.																	
		OSS - Electronic Service Order Charge, Per Local Service Request (LSR) - UNE Only				SOMEC		3.50	0.00	3.50	0.00							
		OSS - Manual Service Order Charge, Per Local Service Request (LSR) - UNE Only				SOMAN		15.69	0.00	1.97	0.00							
UNE SERVICE DATE ADVANCEMENT CHARGE																		
	NOTE: The Expedite charge will be maintained commensurate with BellSouth's FCC No.1 Tariff, Section 5 as applicable.																	
		UNE Expedite Charge per Circuit or Line Assignable USOC, per Day			UAL, UEANL, UCL, UEF, UDF, UEQ, UDL, UENTW, UDN, UEA, UHL, ULC, USL, U1T12, U1T48, U1TD1, U1TD3, U1TDX, U1TO3, U1TS1, U1TVX, UC1BC, UC1BL, UC1CC, UC1CL, UC1DC, UC1DL, UC1EC, UC1EL, UC1FC, UC1FL, UC1GC, UC1GL, UC1HC, UC1HL, UDL12, UDL48, UDLO3, UDLSX, UE3, ULD12, ULD48, ULDD1, ULDD3, ULDDX, ULDO3, ULDS1, ULDVX, UNC1X, UNC3X, UNCDX, UNCNX, UNCSX, UNCVX, UNLD1, UNLD3, UXTD1, UXTD3, UXTS1, U1TUC, U1TUD, U1TUB, U1TUA	SDASP		200.00										
ORDER MODIFICATION CHARGE																		
		Order Modification Charge (OMC)						26.21	0.00	0.00	0.00							
		Order Modification Additional Dispatch Charge (OMCAD)						150.00	0.00	0.00	0.00							
UNBUNDLED EXCHANGE ACCESS LOOP																		
	2-WIRE ANALOG VOICE GRADE LOOP																	
		2-Wire Analog Voice Grade Loop - Service Level 1- Zone 1		1	UEANL	UEAL2	14.94	37.92	17.62	23.56	5.32							
		2-Wire Analog Voice Grade Loop - Service Level 1- Zone 2		2	UEANL	UEAL2	21.39	37.92	17.62	23.56	5.32							
		2-Wire Analog Voice Grade Loop - Service Level 1- Zone 3		3	UEANL	UEAL2	26.72	37.92	17.62	23.56	5.32							
		2-Wire Analog Voice Grade Loop - Service Level 1- Zone 1		1	UEANL	UEASL	14.94	37.92	17.62	23.56	5.32							
		2-Wire Analog Voice Grade Loop - Service Level 1- Zone 2		2	UEANL	UEASL	21.39	37.92	17.62	23.56	5.32							
		2-Wire Analog Voice Grade Loop - Service Level 1- Zone 3		3	UEANL	UEASL	26.72	37.92	17.62	23.56	5.32							
		Unbundled Miscellaneous Rate Element, Tag Loop at End User Premise			UEANL	URETL		8.33	0.83									
		Loop Testing - Basic 1st Half Hour			UEANL	URET1		34.23	34.23									
		Loop Testing - Basic Additional Half Hour			UEANL	URETA		19.90	19.90									
		CLEC to CLEC Conversion Charge Without Outside Dispatch (UVL-SL1)			UEANL	UREWO		15.81	8.96									

CATEGORY	RATE ELEMENTS	Interim	Zone	BCS	USOC	RATES ($)					Svc Order Submitted Elec per LSR	Svc Order Submitted Manually per LSR	Incremental Charge - Manual Svc Order vs. Electronic-1st	Incremental Charge - Manual Svc Order vs. Electronic-Add'l	Incremental Charge - Manual Svc Order vs. Electronic-Disc 1st	Incremental Charge - Manual Svc Order vs. Electronic-Disc Add'l
						Rec	Nonrecurring		Nonrecurring Disconnect		OSS Rates ($)					
							First	Add'l	First	Add'l	SOMEC	SOMAN	SOMAN	SOMAN	SOMAN	SOMAN
	Unbundled Voice Loop, Non-Design Voice Loop, billing for BST providing make-up (Engineering Information - E.I.)			UEANL	UEANM		13.47	13.47								
	Manual Order Coordination for UVL-SL1s (per loop)			UEANL	UEAMC		8.17	8.17								
	Order Coordination for Specified Conversion Time for UVL-SL1 (per LSR)			UEANL	OCOSL		18.13	18.13								
2-WIRE Unbundled COPPER LOOP																
	2-Wire Unbundled Copper Loop - Non-Designed Zone 1		1	UEQ	UEQ2X	12.94	36.40	16.10	22.66	4.42						
	2 Wire Unbundled Copper Loop - Non-Designed - Zone 2		2	UEQ	UEQ2X	14.51	36.40	16.10	22.66	4.42						
	2 Wire Unbundled Copper Loop - Non-Designed - Zone 3		3	UEQ	UEQ2X	15.02	36.40	16.10	22.66	4.42						
	Unbundled Miscellaneous Rate Element, Tag Loop at End User Premise			UEQ	URETL		8.33	0.83								
	Manual Order Coordination 2 Wire Unbundled Copper Loop - Non-Designed (per loop)			UEQ	USBMC		8.17	8.17								
	Unbundled Copper Loop, Non-Design Copper Loop, billing for BST providing make-up (Engineering Information - E.I.)			UEQ	UEQMU		13.47	13.47								
	Loop Testing - Basic 1st Half Hour			UEQ	URET1		34.23	34.23								
	Loop Testing - Basic Additional Half Hour			UEQ	URETA		19.90	19.90								
	CLEC to CLEC Conversion Charge Without Outside Dispatch (UCL-ND)			UEQ	UREWO		14.30	7.45								
UNBUNDLED EXCHANGE ACCESS LOOP																
2-WIRE ANALOG VOICE GRADE LOOP																
	2 Wire Analog Voice Grade Loop-Service Level 1-Line Splitting-Zone 1		1	UEPSR UEPSB	UEALS	14.94	37.92	17.62	23.56	5.32						
	2 Wire Analog Voice Grade Loop-Service Level 1-Line Splitting-Zone 1		1	UEPSR UEPSB	UEABS	14.94	37.92	17.62	23.56	5.32						
	2 Wire Analog Voice Grade Loop- Service Level 1-Line Splitting-Zone 2		2	UEPSR UEPSB	UEALS	21.39	37.92	17.62	23.56	5.32						
	2 Wire Analog Voice Grade Loop- Service Level 1-Line Splitting-Zone 2		2	UEPSR UEPSB	UEABS	21.39	37.92	17.62	23.56	5.32						
	2 Wire Analog Voice Grade Loop-Service Level 1-Line Splitting-Zone 3		3	UEPSR UEPSB	UEALS	26.72	37.92	17.62	23.56	5.32						
	2 Wire Analog Voice Grade Loop-Service Level 1-Line Splitting-Zone 3		3	UEPSR UEPSB	UEABS	26.72	37.92	17.62	23.56	5.32						
UNBUNDLED EXCHANGE ACCESS LOOP																
2-WIRE ANALOG VOICE GRADE LOOP																
	2-Wire Analog Voice Grade Loop - Service Level 2 w/Loop or Ground Start Signaling - Zone 1		1	UEA	UEAL2	16.68	105.98	68.43	53.05	10.61						
	2-Wire Analog Voice Grade Loop - Service Level 2 w/Loop or Ground Start Signaling - Zone 2		2	UEA	UEAL2	23.13	105.98	68.43	53.05	10.61						
	2-Wire Analog Voice Grade Loop - Service Level 2 w/Loop or Ground Start Signaling - Zone 3		3	UEA	UEAL2	28.46	105.98	68.43	53.05	10.61						
	Order Coordination for Specified Conversion Time (per LSR)			UEA	OCOSL		18.13									
	2-Wire Analog Voice Grade Loop - Service Level 2 w/Reverse Battery Signaling - Zone 1		1	UEA	UEAR2	16.68	105.98	68.43	53.05	10.61						
	2-Wire Analog Voice Grade Loop - Service Level 2 w/Reverse Battery Signaling - Zone 2		2	UEA	UEAR2	23.13	105.98	68.43	53.05	10.61						
	2-Wire Analog Voice Grade Loop - Service Level 2 w/Reverse Battery Signaling - Zone 3		3	UEA	UEAR2	28.46	105.98	68.43	53.05	10.61						
	Order Coordination for Specified Conversion Time (per LSR)			UEA	OCOSL		18.13									
	CLEC to CLEC Conversion Charge without outside dispatch			UEA	UREWO		87.90	36.44								
	Loop Tagging - Service Level 2 (SL2)			UEA	URETL		11.24	1.10								
4-WIRE ANALOG VOICE GRADE LOOP																
	4-Wire Analog Voice Grade Loop - Zone 1		1	UEA	UEAL4	32.59	132.38	94.83	59.35	14.61						
	4-Wire Analog Voice Grade Loop - Zone 2		2	UEA	UEAL4	43.89	132.38	94.83	59.35	14.61						
	4-Wire Analog Voice Grade Loop - Zone 3		3	UEA	UEAL4	43.38	132.38	94.83	59.35	14.61						
	Order Coordination for Specified Conversion Time (per LSR)			UEA	OCOSL		18.13									
	CLEC to CLEC Conversion Charge without outside dispatch			UEA	UREWO		87.90	36.44								
2-WIRE ISDN DIGITAL GRADE LOOP																
	2-Wire ISDN Digital Grade Loop - Zone 1		1	UDN	U1L2X	25.21	117.58	80.03	53.05	10.61						
	2-Wire ISDN Digital Grade Loop - Zone 2		2	UDN	U1L2X	32.76	117.58	80.03	53.05	10.61						
	2-Wire ISDN Digital Grade Loop - Zone 3		3	UDN	U1L2X	37.70	117.58	80.03	53.05	10.61						
	Order Coordination For Specified Conversion Time (per LSR)			UDN	OCOSL		18.13									
	CLEC to CLEC Conversion Charge without outside dispatch			UDN	UREWO		91.82	44.25								
2-WIRE ASYMMETRICAL DIGITAL SUBSCRIBER LINE (ADSL) COMPATIBLE LOOP																

CATEGORY	RATE ELEMENTS	Interim	Zone	BCS	USOC	RATES ($)					Svc Order Submitted Elec per LSR	Svc Order Submitted Manually per LSR	Incremental Charge - Manual Svc Order vs. Electronic-1st	Incremental Charge - Manual Svc Order vs. Electronic-Add'l	Incremental Charge - Manual Svc Order vs. Electronic-Disc 1st	Incremental Charge - Manual Svc Order vs. Electronic-Disc Add'l
						Rec	Nonrecurring		Nonrecurring Disconnect		OSS Rates ($)					
							First	Add'l	First	Add'l	SOMEC	SOMAN	SOMAN	SOMAN	SOMAN	SOMAN
	2 Wire Unbundled ADSL Loop including manual service inquiry & facility reservation - Zone 1		1	UAL	UAL2X	12.19	120.84	70.56	50.37	7.93						
	2 Wire Unbundled ADSL Loop including manual service inquiry & facility reservation - Zone 2		2	UAL	UAL2X	13.71	120.84	70.56	50.37	7.93						
	2 Wire Unbundled ADSL Loop including manual service inquiry & facility reservation - Zone 3		3	UAL	UAL2X	14.14	120.84	70.56	50.37	7.93						
	Order Coordination for Specified Conversion Time (per LSR)			UAL	OCOSL		18.13									
	2 Wire Unbundled ADSL Loop without manual service inquiry & facility reservaton - Zone 1		1	UAL	UAL2W	12.19	95.81	57.82	50.37	7.93						
	2 Wire Unbundled ADSL Loop without manual service inquiry & facility reservaton - Zone 2		2	UAL	UAL2W	13.71	95.81	57.82	50.37	7.93						
	2 Wire Unbundled ADSL Loop without manual service inquiry & facility reservaton - Zone 3		3	UAL	UAL2W	14.14	95.81	57.82	50.37	7.93						
	Order Coordination for Specified Conversion Time (per LSR)			UAL	OCOSL		18.13									
	CLEC to CLEC Conversion Charge without outside dispatch			UAL	UREWO		86.38	40.48								
2-WIRE HIGH BIT RATE DIGITAL SUBSCRIBER LINE (HDSL) COMPATIBLE LOOP																
	2 Wire Unbundled HDSL Loop including manual service inquiry & facility reservation - Zone 1		1	UHL	UHL2X	9.58	129.52	79.24	50.37	7.93						
	2 Wire Unbundled HDSL Loop including manual service inquiry & facility reservation - Zone 2		2	UHL	UHL2X	10.92	129.52	79.24	50.37	7.93						
	2 Wire Unbundled HDSL Loop including manual service inquiry & facility reservation - Zone 3		3	UHL	UHL2X	11.40	129.52	79.24	50.37	7.93						
	Order Coordination for Specified Conversion Time (per LSR)			UHL	OCOSL		18.13									
	2 Wire Unbundled HDSL Loop without manual service inquiry and facility reservation - Zone 1		1	UHL	UHL2W	9.58	104.49	66.50	50.37	7.93						
	2 Wire Unbundled HDSL Loop without manual service inquiry and facility reservation - Zone 2		2	UHL	UHL2W	10.92	104.49	66.50	50.37	7.93						
	2 Wire Unbundled HDSL Loop without manual service inquiry and facility reservation - Zone 3		3	UHL	UHL2W	11.40	104.49	66.50	50.37	7.93						
	Order Coordination for Specified Conversion Time (per LSR)			UHL	OCOSL		18.13									
	CLEC to CLEC Conversion Charge without outside dispatch			UHL	UREWO		86.32	40.48								
4-WIRE HIGH BIT RATE DIGITAL SUBSCRIBER LINE (HDSL) COMPATIBLE LOOP																
	4 Wire Unbundled HDSL Loop including manual service inquiry and facility reservation - Zone 1		1	UHL	UHL4X	16.02	158.18	107.89	55.12	10.38						
	4-Wire Unbundled HDSL Loop including manual service inquiry and facility reservation - Zone 2		2	UHL	UHL4X	14.33	158.18	107.89	55.12	10.38						
	4-Wire Unbundled HDSL Loop including manual service inquiry and facility reservation - Zone 3		3	UHL	UHL4X	16.84	158.18	107.89	55.12	10.38						
	Order Coordination for Specified Conversion Time (per LSR)			UHL	OCOSL		18.13									
	4-Wire Unbundled HDSL Loop without manual service inquiry and facility reservation - Zone 1		1	UHL	UHL4W	16.02	133.14	95.16	55.12	10.38						
	4-Wire Unbundled HDSL Loop without manual service inquiry and facility reservation - Zone 2		2	UHL	UHL4W	14.33	133.14	95.16	55.12	10.38						
	4-Wire Unbundled HDSL Loop without manual service inquiry and facility reservation - Zone 3		3	UHL	UHL4W	16.84	133.14	95.16	55.12	10.38						
	Order Coordination for Specified Conversion Time (per LSR)			UHL	OCOSL		18.13									
	CLEC to CLEC Conversion Charge without outside dispatch			UHL	UREWO		86.32	40.48								
4-WIRE DS1 DIGITAL LOOP																
	4-Wire DS1 Digital Loop - Zone 1		1	USL	USLXX	79.51	253.03	157.89	44.80	11.73						
	4-Wire DS1 Digital Loop - Zone 2		2	USL	USLXX	136.00	253.03	157.89	44.80	11.73						
	4-Wire DS1 Digital Loop - Zone 3		3	USL	USLXX	229.15	253.03	157.89	44.80	11.73						
	Order Coordination for Specified Conversion Time (per LSR)			USL	OCOSL		18.13									
	CLEC to CLEC Conversion Charge without outside dispatch			USL	UREWO		101.30	43.13								
4-WIRE 19.2, 56 OR 64 KBPS DIGITAL GRADE LOOP																
	4 Wire Unbundled Digital 19.2 Kbps		1	UDL	UDL19	29.93	126.66	89.12	59.35	14.61						
	4 Wire Unbundled Digital 19.2 Kbps		2	UDL	UDL19	33.99	126.66	89.12	59.35	14.61						
	4 Wire Unbundled Digital 19.2 Kbps		3	UDL	UDL19	34.74	126.66	89.12	59.35	14.61						
	4 Wire Unbundled Digital Loop 56 Kbps - Zone 1		1	UDL	UDL56	29.93	126.66	89.12	59.35	14.61						
	4 Wire Unbundled Digital Loop 56 Kbps - Zone 2		2	UDL	UDL56	33.99	126.66	89.12	59.35	14.61						
	4 Wire Unbundled Digital Loop 56 Kbps - Zone 3		3	UDL	UDL56	34.74	126.66	89.12	59.35	14.61						
	Order Coordination for Specified Conversion Time (per LSR)			UDL	OCOSL		18.13									
	4 Wire Unbundled Digital Loop 64 Kbps - Zone 1		1	UDL	UDL64	29.93	126.66	89.12	59.35	14.61						
	4 Wire Unbundled Digital Loop 64 Kbps - Zone 2		2	UDL	UDL64	33.99	126.66	89.12	59.35	14.61						
	4 Wire Unbundled Digital Loop 64 Kbps - Zone 3		3	UDL	UDL64	34.74	126.66	89.12	59.35	14.61						

UNBUNDLED NETWORK ELEMENTS - South Carolina														Attachment: 2 Ex. A				
CATEGORY		RATE ELEMENTS	Interim	Zone	BCS	USOC	RATES ($)					Svc Order Submitted Elec per LSR	Svc Order Submitted Manually per LSR	Incremental Charge - Manual Svc Order vs. Electronic-1st	Incremental Charge - Manual Svc Order vs. Electronic-Add'l	Incremental Charge - Manual Svc Order vs. Electronic-Disc 1st	Incremental Charge - Manual Svc Order vs. Electronic-Disc Add'l	
							Rec	Nonrecurring		Nonrecurring Disconnect		OSS Rates ($)						
								First	Add'l	First	Add'l	SOMEC	SOMAN	SOMAN	SOMAN	SOMAN	SOMAN	
		Order Coordination for Specified Conversion Time (per LSR)			UDL	OCOSL		18.13										
		CLEC to CLEC Conversion Charge without outside dispatch			UDL	UREWO		102.34	49.85									
	2-WIRE Unbundled COPPER LOOP																	
		2-Wire Unbundled Copper Loop-Designed including manual service inquiry & facility reservation - Zone 1		1	UCL	UCLPB	12.19	119.91	69.62	50.37	7.93							
		2-Wire Unbundled Copper Loop-Designed including manual service inquiry & facility reservation - Zone 2		2	UCL	UCLPB	13.71	119.91	69.62	50.37	7.93							
		2 Wire Unbundled Copper Loop-Designed including manual service inquiry & facility reservation - Zone 3		3	UCL	UCLPB	14.14	119.91	69.62	50.37	7.93							
		Order Coordination for Unbundled Copper Loops (per loop)			UCL	UCLMC		8.17	8.17									
		2-Wire Unbundled Copper Loop-Designed without manual service inquiry and facility reservation - Zone 1		1	UCL	UCLPW	12.19	94.87	56.89	50.37	7.93							
		2-Wire Unbundled Copper Loop-Designed without manual service inquiry and facility reservation - Zone 2		2	UCL	UCLPW	13.71	94.87	56.89	50.37	7.93							
		2-Wire Unbundled Copper Loop-Designed without manual service inquiry and facility reservation - Zone 3		3	UCL	UCLPW	14.14	94.87	56.89	50.37	7.93							
		Order Coordination for Unbundled Copper Loops (per loop)			UCL	UCLMC		8.17	8.17									
		CLEC to CLEC Conversion Charge without outside dispatch (UCL-Des)			UCL	UREWO		94.87	42.57									
	4-WIRE COPPER LOOP																	
		4-Wire Copper Loop-Designed including manual service inquiry and facility reservation - Zone 1		1	UCL	UCL4S	19.64	144.17	93.88	55.12	10.38							
		4-Wire Copper Loop-Designed including manual service inquiry and facility reservation - Zone 2		2	UCL	UCL4S	20.90	144.17	93.88	55.12	10.38							
		4-Wire Copper Loop-Designed including manual service inquiry and facility reservation - Zone 3		3	UCL	UCL4S	19.34	144.17	93.88	55.12	10.38							
		Order Coordination for Unbundled Copper Loops (per loop)			UCL	UCLMC		8.17	8.17									
		4-Wire Copper Loop-Designed without manual service inquiry and facility reservation - Zone 1		1	UCL	UCL4W	19.64	119.13	81.15	55.12	10.38							
		4-Wire Copper Loop-Designed without manual service inquiry and facility reservation - Zone 2		2	UCL	UCL4W	20.90	119.13	81.15	55.12	10.38							
		4-Wire Copper Loop-Designed without manual service inquiry and facility reservation - Zone 3		3	UCL	UCL4W	19.34	119.13	81.15	55.12	10.38							
		Order Coordination for Unbundled Copper Loops (per loop)			UCL	UCLMC		8.17	8.17									
		CLEC to CLEC Conversion Charge without outside dispatch (UCL-Des)			UCL	UREWO		94.87	42.57									
LOOP MODIFICATION																		
		Unbundled Loop Modification, Removal of Load Coils - 2 Wire pair less than or equal to 18k ft, per Unbundled Loop			UAL, UHL, UCL, UEQ, ULS, UEA, UEANL, UEPSR, UEPSB	ULM2L		32.46	32.46									
		Unbundled Loop Modification Removal of Load Coils - 4 Wire less than or equal to 18K ft, per Unbundled Loop			UHL, UCL, UEA	ULM4L		32.46	32.46									
		Unbundled Loop Modification Removal of Bridged Tap Removal, per unbundled loop			UAL, UHL, UCL, UEQ, ULS, UEA, UEANL, UEPSR, UEPSB	ULMBT		32.48	32.48									
SUB-LOOPS																		
	Sub-Loop Distribution																	
		Sub-Loop - Per Cross Box Location - CLEC Feeder Facility Set-Up	I		UEANL	USBSA		241.42	241.42									
		Sub-Loop - Per Cross Box Location - Per 25 Pair Panel Set-Up	I		UEANL	USBSB		22.69	22.69									
		Sub-Loop - Per Building Equipment Room - CLEC Feeder Facility Set-Up	I		UEANL	USBSC		177.84	177.84									
		Sub-Loop - Per Building Equipment Room - Per 25 Pair Panel Set-Up	I		UEANL	USBSD		55.58	55.58									
		Sub-Loop Distribution Per 2-Wire Analog Voice Grade Loop - Zone 1	I	1	UEANL	USBN2	8.87	65.94	31.03	45.35	6.71							
		Sub-Loop Distribution Per 2-Wire Analog Voice Grade Loop - Zone 2	I	2	UEANL	USBN2	12.58	65.94	31.03	45.35	6.71							
		Sub-Loop Distribution Per 2-Wire Analog Voice Grade Loop - Zone 3	I	3	UEANL	USBN2	14.79	65.94	31.03	45.35	6.71							

CATEGORY	RATE ELEMENTS	Interim	Zone	BCS	USOC	RATES ($)					Svc Order Submitted Elec per LSR	Svc Order Submitted Manually per LSR	Incremental Charge - Manual Svc Order vs. Electronic-1st	Incremental Charge - Manual Svc Order vs. Electronic-Add'l	Incremental Charge - Manual Svc Order vs. Electronic-Disc 1st	Incremental Charge - Manual Svc Order vs. Electronic-Disc Add'l
						Rec	Nonrecurring		Nonrecurring Disconnect		OSS Rates ($)					
							First	Add'l	First	Add'l	SOMEC	SOMAN	SOMAN	SOMAN	SOMAN	SOMAN
	Order Coordination for Unbundled Sub-Loops, per sub-loop pair			UEANL	USBMC		8.17	8.17								
	Sub-Loop Distribution Per 4-Wire Analog Voice Grade Loop - Zone 1		1	UEANL	USBN4	14.11	79.21	44.29	49.82	9.09						
	Sub-Loop Distribution Per 4-Wire Analog Voice Grade Loop - Zone 2		2	UEANL	USBN4	19.40	79.21	44.29	49.82	9.09						
	Sub-Loop Distribution Per 4-Wire Analog Voice Grade Loop - Zone 3		3	UEANL	USBN4	18.90	79.21	44.29	49.82	9.09						
	Order Coordination for Unbundled Sub-Loops, per sub-loop pair			UEANL	USBMC		8.17	8.17								
	Sub-Loop 2-Wire Intrabuilding Network Cable (INC)	I		UEANL	USBR2	2.41	53.13	18.21	45.35	6.71						
	Order Coordination for Unbundled Sub-Loops, per sub-loop pair			UEANL	USBMC		8.17	8.17								
	Sub-Loop 4-Wire Intrabuilding Network Cable (INC)	I		UEANL	USBR4	5.36	59.38	24.47	49.82	9.09						
	Order Coordination for Unbundled Sub-Loops, per sub-loop pair			UEANL	USBMC		8.17	8.17								
	Loop Testing - Basic 1st Half Hour			UEANL	URET1		34.23	34.23								
	Loop Testing - Basic Additional Half Hour			UEANL	URETA		19.90	19.90								
	2 Wire Copper Unbundled Sub-Loop Distribution - Zone 1	I	1	UEF	UCS2X	7.11	65.94	31.03	45.35	6.71						
	2 Wire Copper Unbundled Sub-Loop Distribution - Zone 2	I	2	UEF	UCS2X	9.83	65.94	31.03	45.35	6.71						
	2 Wire Copper Unbundled Sub-Loop Distribution - Zone 3	I	3	UEF	UCS2X	10.48	65.94	31.03	45.35	6.71						
	Order Coordination for Unbundled Sub-Loops, per sub-loop pair			UEF	USBMC		8.17	8.17								
	4 Wire Copper Unbundled Sub-Loop Distribution - Zone 1	I	1	UEF	UCS4X	7.85	79.21	44.29	49.82	9.09						
	4 Wire Copper Unbundled Sub-Loop Distribution - Zone 2	I	2	UEF	UCS4X	14.17	79.21	44.29	49.82	9.09						
	4 Wire Copper Unbundled Sub-Loop Distribution - Zone 3	I	3	UEF	UCS4X	12.64	79.21	44.29	49.82	9.09						
	Order Coordination for Unbundled Sub-Loops, per sub-loop pair			UEF	USBMC		8.17	8.17								
	Loop Testing - Basic 1st Half Hour			UEF	URET1		34.23	34.23								
	Loop Testing - Basic Additional Half Hour			UEF	URETA		19.90	19.90								
	Unbundled Network Terminating Wire (UNTW)															
	Unbundled Network Terminating Wire (UNTW) per Pair			UENTW	UENPP	0.3303	30.20	30.20								
	Network Interface Device (NID)															
	Network Interface Device (NID) - 1-2 lines			UENTW	UND12		43.68	28.79								
	Network Interface Device (NID) - 1-6 lines			UENTW	UND16		64.42	49.53								
	Network Interface Device Cross Connect - 2 W			UENTW	UNDC2		5.92	5.92								
	Network Interface Device Cross Connect - 4W			UENTW	UNDC4		5.92	5.92								
UNE OTHER, PROVISIONING ONLY - NO RATE																
	NID - Dispatch and Service Order for NID installation			UENTW	UNDBX	0.00	0.00									
	UNTW Circuit Id Establishment, Provisioning Only - No Rate			UENTW	UENCE	0.00	0.00									
	Unbundled Contract Name, Provisioning Only - No Rate			UEANL,UEF,UEQ,UENTW	UNECN	0.00	0.00									
UNE OTHER, PROVISIONING ONLY - NO RATE																
	Unbundled Contact Name, Provisioning Only - no rate			UAL,UCL,UDC,UDL, UDN,UEA,UHL, USL	UNECN	0.00	0.00									
	Unbundled Sub-Loop Feeder-2 Wire Cross Box Jumper - no rate			UEA,UDN,UCL,UDC	USBFQ	0.00	0.00									
	Unbundled Sub-Loop Feeder-4 Wire Cross Box Jumper - no rate			UEA,USL,UCL,UDL	USBFR	0.00	0.00									
	Unbundled DS1 Loop - Superframe Format Option - no rate			USL	CCOSF	0.00	0.00									
	Unbundled DS1 Loop - Expanded Superframe Format option - no rate			USL	CCOEF	0.00	0.00									
HIGH CAPACITY UNBUNDLED LOCAL LOOP																
	High Capacity Unbundled Local Loop - DS3 - Per Mile per month			UE3	1L5ND	12.26										
	High Capacity Unbundled Local Loop - DS3 - Facility Termination per month			UE3	UE3PX	306.36	520.398	304.2095	137.7125	96.3355						
	High Capacity Unbundled Local Loop - STS-1 - Per Mile per month			UDLSX	1L5ND	12.26										
	High Capacity Unbundled Local Loop - STS-1 - Facility Termination per month			UDLSX	UDLS1	313.49	520.398	304.2095	137.7125	96.3355						
LOOP MAKE-UP																

CATEGORY	RATE ELEMENTS	Interim	Zone	BCS	USOC	RATES ($)					Svc Order Submitted Elec per LSR	Svc Order Submitted Manually per LSR	Incremental Charge - Manual Svc Order vs. Electronic-1st	Incremental Charge - Manual Svc Order vs. Electronic-Add'l	Incremental Charge - Manual Svc Order vs. Electronic-Disc 1st	Incremental Charge - Manual Svc Order vs. Electronic-Disc Add'l
						Rec	Nonrecurring		Nonrecurring Disconnect		OSS Rates ($)					
							First	Add'l	First	Add'l	SOMEC	SOMAN	SOMAN	SOMAN	SOMAN	SOMAN
	Loop Makeup - Preordering Without Reservation, per working or spare facility queried (Manual).			UMK	UMKLW		24.04	24.04								
	Loop Makeup - Preordering With Reservation, per spare facility queried (Manual).			UMK	UMKLP		25.49	25.49								
	Loop Makeup--With or Without Reservation, per working or spare facility queried (Mechanized)			UMK	UMKMQ		0.34	0.34								
LINE SPLITTING																
LINE SPLITTING																
END USER ORDERING-CENTRAL OFFICE BASED																
	Line Splitting - per line activation DLEC owned splitter			UEPSR UEPSB	UREOS	0.61										
	Line Splitting - per line activation BST owned - physical			UEPSR UEPSB	UREBP	0.61	37.09	21.24	20.07	9.85						
	Line Splitting - per line activation BST owned - virtual			UEPSR UEPSB	UREBV	0.61	37.09	21.24	20.07	9.85						
MAINTENANCE OF SERVICE																
NOTE: The Expedite charge will be maintained commensurate with BellSouth's FCC No.1 Tariff, Section 13.3.1 as applicable.																
	No Trouble Found - per 1/2 hour increments - Basic						80.00	55.00								
	No Trouble Found - per 1/2 hour increments - Overtime						90.00	65.00								
	No Trouble Found - per 1/2 hour increments - Premium						100.00	75.00								
UNBUNDLED DEDICATED TRANSPORT																
INTEROFFICE CHANNEL - DEDICATED TRANSPORT																
	Interoffice Channel - Dedicated Transport - 2-Wire Voice Grade - Per Mile per month			U1TVX	1L5XX	0.0167										
	Interoffice Channel - Dedicated Transport- 2- Wire Voice Grade - Facility Termination			U1TVX	U1TV2	24.30	40.63	27.47	16.77	6.91						
	Interoffice Channel - Dedicated Transpor t- 2-Wire Voice Grade Rev Bat. - Per Mile per month			U1TVX	1L5XX	0.0167										
	Interoffice Channel - Dedicated Transport- 2- Wire VG Rev Bat. - Facility Termination			U1TVX	U1TR2	24.30	40.63	27.47	16.77	6.91						
	Interoffice Channel - Dedicated Transport - 4-Wire Voice Grade - Per Mile per month			U1TVX	1L5XX	0.0167										
	Interoffice Channel - Dedicated Transport - 4- Wire Voice Grade - Facility Termination			U1TVX	U1TV4	21.29	40.63	27.47	16.77	6.91						
	Interoffice Channel - Dedicated Transport - 56 kbps - per mile per month			U1TDX	1L5XX	0.0167										
	Interoffice Channel - Dedicated Transport - 56 kbps - Facility Termination			U1TDX	U1TD5	16.76	40.63	27.47	16.77	6.91						
	Interoffice Channel - Dedicated Transport - 64 kbps - per mile per month			U1TDX	1L5XX	0.0167										
	Interoffice Channel - Dedicated Transport - 64 kbps - Facility Termination			U1TDX	U1TD6	16.76	40.63	27.47	16.77	6.91						
	Interoffice Channel - Dedicated Channel - DS1 - Per Mile per month			U1TD1	1L5XX	0.3415										
	Interoffice Channel - Dedicated Tranport - DS1 - Facility Termination			U1TD1	U1TF1	77.14	89.47	81.99	16.39	14.48						
	Interoffice Channel - Dedicated Transport - DS3 - Per Mile per month			U1TD3	1L5XX	8.02										
	Interoffice Channel - Dedicated Transport - DS3 - Facility Termination per month			U1TD3	U1TF3	880.65	279.37	163.12	60.33	58.59						
	Interoffice Channel - Dedicated Transport - STS-1 - Per Mile per month			U1TS1	1L5XX	8.02										
	Interoffice Channel - Dedicated Transport - STS-1 - Facility Termination			U1TS1	U1TFS	880.55	279.37	163.12	60.33	58.59						
DARK FIBER																
	Dark Fiber, Four Fiber Strands, Per Route Mile or Fraction Thereof per month - Local Channel			UDF, UDFCX	1L5DC	112.30										
	Dark Fiber, Four Fiber Strands, Per Route Mile or Fraction Thereof per month - Interoffice Channel			UDF, UDFCX	1L5DF	36.41										
	NRC Dark Fiber - Interoffice Channel			UDF, UDFCX	UDF14		640.51	138.17	317.76	198.11						
	Dark Fiber, Four Fiber Strands, Per Route Mile or Fraction Thereof per month - Local Loop			UDF, UDFCX	1L5DL	112.30										
8XX ACCESS TEN DIGIT SCREENING																
	8XX Access Ten Digit Screening, Per Call					0.0006673										
	8XX Access Ten Digit Screening, w/ 8XX No. Delivery					0.0006673										
	8XX Access Ten Digit Screening, w/ POTS No. Delivery					0.0006673										
LINE INFORMATION DATA BASE ACCESS (LIDB)																

UNBUNDLED NETWORK ELEMENTS - South Carolina

Attachment: 2 Ex. A

CATEGORY	RATE ELEMENTS	Interim	Zone	BCS	USOC	RATES ($)					Svc Order Submitted Elec per LSR	Svc Order Submitted Manually per LSR	Incremental Charge - Manual Svc Order vs. Electronic- 1st	Incremental Charge - Manual Svc Order vs. Electronic- Add'l	Incremental Charge - Manual Svc Order vs. Electronic- Disc 1st	Incremental Charge - Manual Svc Order vs. Electronic- Disc Add'l
						Rec	Nonrecurring		Nonrecurring Disconnect		OSS Rates ($)					
							First	Add'l	First	Add'l	SOMEC	SOMAN	SOMAN	SOMAN	SOMAN	SOMAN
	LIDB Common Transport Per Query					0.0000246										
	LIDB Validation Per Query					0.0138158										
	LIDB Originating Point Code Establishment or Change			OQU	NRBPX		34.40		42.18							
CALLING NAME (CNAM) SERVICE																
	CNAM For DB Owners - Service Establishment						23.00	23.00	21.15	21.15						
	CNAM For Non DB Owners - Service Establishment						23.00	23.00	21.15	21.15						
	CNAM For DB Owners - Service Provisioning With Point Code Establishment						993.09	734.47	269.53	198.18						
	CNAM For Non DB Owners - Service Provisioning With Point Code Establishment						343.09	245.69	275.87	198.18						
	CNAM for DB Owners, Per Query					0.0010433										
	CNAM for Non DB Owners, Per Query					0.0010433										
LNP Query Service																
	LNP Charge Per query					0.0008837										
	LNP Service Establishment Manual						25.09	25.09	23.07	23.07						
	LNP Service Provisioning with Point Code Establishment						594.82	303.88	269.53	198.18						
SELECTIVE ROUTING																
	Selective Routing Per Unique Line Class Code Per Request Per Switch						84.89	84.89	14.14	14.14						
VIRTUAL COLLOCATION																
	Virtual Collocation-2 Wire Cross Connects (Loop) for Line Splitting			UEPSR UEPSB	VE1LS	0.0317	12.32	11.83	6.04	5.45						
PHYSICAL COLLOCATION																
	Physical Collocation-2 Wire Cross Connects (Loop) for Line Splitting			UEPSR UEPSB	PE1LS	0.0341	12.32	11.83	6.04	5.45						
AIN SELECTIVE CARRIER ROUTING																
	Regional Service Establishment						101,324.34	101,324.34	8,609.85	8,609.85						
	End Office Establishment						175.66	175.66	1.70	1.70						
	Query NRC, per query					0.0035036										
AIN - BELLSOUTH AIN SMS ACCESS SERVICE																
	AIN SMS Access Service - Service Establishment, Per State, Initial Setup			A1N	CAMSE		39.53	39.53	40.78	40.78						
	AIN SMS Access Service - Port Connection - Dial/Shared Access			A1N	CAMDP		7.85	7.85	9.11	9.11						
	AIN SMS Access Service - Port Connection - ISDN Access			A1N	CAM1P		7.85	7.85	9.11	9.11						
	AIN SMS Access Service - User Identification Codes - Per User ID Code			A1N	CAMAU		35.08	35.08	27.12	27.12						
	AIN SMS Access Service - Security Card, Per User ID Code, Initial or Replacement			A1N	CAMRC		41.98	41.98	11.74	11.74						
	AIN SMS Access Service - Storage, Per Unit (100 Kilobytes)					0.0027										
	AIN SMS Access Service - Session, Per Minute					0.7121										
	AIN SMS Access Service - Company Performed Session, Per Minute					0.8364										
SIGNALING (CCS7)																
	CCS7 Signaling Usage, Per TCAP Message					0.0000692										
	CCS7 Signaling Usage, Per ISUP Message					0.0000173										
911 PBX LOCATE																
	911 PBX LOCATE DATABASE CAPABILITY															
	Service Establishment per CLEC per End User Account			9PBDC	9PBEU		1,813.00									
	Changes to TN Range or Customer Profile			9PBDC	9PBTN		181.40									
	Per Telephone Number (Monthly)			9PBDC	9PBMM	0.07										
	Change Company (Service Provider) ID			9PBDC	9PBPC		532.48									
	PBX Locate Service Support per CLEC (Monthlt)			9PBDC	9PBMR	181.29										
	Service Order Charge			9PBDC	9PBSC		15.69									
	911 PBX LOCATE TRANSPORT COMPONENT															
	See Att 3															
ENHANCED EXTENDED LINK (EELs)																
	NOTE: The monthly recurring and non-recurring charges below will apply and the Switch-As-Is Charge will not apply for UNE combinations provisioned as ' Ordinarily Combined' Network Elements.															
	NOTE: The monthly recurring and the Switch-As-Is Charge and not the non-recurring charges below will apply for UNE combinations provisioned as ' Currently Combined' Network Elements.															
	2-WIRE VOICE GRADE LOOP FOR USE IN A COMBINATION															
	2-Wire VG Loop (SL2) in Combination - Zone 1		1	UNCVX	UEAL2	16.68	105.98	68.43	53.05	10.61						
	2-Wire VG Loop (SL2) in Combination - Zone 2		2	UNCVX	UEAL2	23.13	105.98	68.43	53.05	10.61						
	2-Wire VG Loop (SL2) in Combination - Zone 3		3	UNCVX	UEAL2	28.46	105.98	68.43	53.05	10.61						
	Voice Grade COCI - Per Month			UNCVX	1D1VG	0.56	6.59	4.73	0.00	0.00						

CATEGORY	RATE ELEMENTS	Interim	Zone	BCS	USOC	RATES ($)					Svc Order Submitted Elec per LSR	Svc Order Submitted Manually per LSR	Incremental Charge - Manual Svc Order vs. Electronic-1st	Incremental Charge - Manual Svc Order vs. Electronic-Add'l	Incremental Charge - Manual Svc Order vs. Electronic-Disc 1st	Incremental Charge - Manual Svc Order vs. Electronic-Disc Add'l
						Rec	Nonrecurring		Nonrecurring Disconnect		OSS Rates ($)					
							First	Add'l	First	Add'l	SOMEC	SOMAN	SOMAN	SOMAN	SOMAN	SOMAN
4-WIRE VOICE GRADE LOOP FOR USE IN A COMBINATION																
	4-Wire Analog Voice Grade Loop in Combination - Zone 1		1	UNCVX	UEAL4	32.59	132.38	94.83	59.35	14.61						
	4-Wire Analog Voice Grade Loop in Combination - Zone 2		2	UNCVX	UEAL4	43.89	132.38	94.83	59.35	14.61						
	4-Wire Analog Voice Grade Loop in Combination - Zone 3		3	UNCVX	UEAL4	43.38	132.38	94.83	59.35	14.61						
	Voice Grade COCI in combination - per month			UNCVX	1D1VG	0.56	6.59	4.73	0.00	0.00						
4-WIRE 56 KBPS DIGITAL LOOP FOR USE IN A COMBINATION																
	4-Wire 56Kbps Digital Grade Loop in Combination - Zone 1		1	UNCDX	UDL56	29.93	126.66	89.12	59.35	14.61						
	4-Wire 56Kbps Digital Grade Loop in Combination - Zone 2		2	UNCDX	UDL56	33.99	126.66	89.12	59.35	14.61						
	4-Wire 56Kbps Digital Grade Loop in Combination - Zone 3		3	UNCDX	UDL56	34.74	126.66	89.12	59.35	14.61						
	OCU-DP COCI (data) per month (2.4-64kbs)			UNCDX	1D1DD	1.19	6.59	4.73	0.00	0.00						
4-WIRE 64 KBPS DIGITAL LOOP FOR USE IN A COMBINATI\ON																
	4-Wire 64Kbps Digital Grade Loop in Combination - Zone 1		1	UNCDX	UDL64	29.93	126.66	89.12	59.35	14.61						
	4-Wire 64Kbps Digital Grade Loop in Combination - Zone 2		2	UNCDX	UDL64	33.99	126.66	89.12	59.35	14.61						
	4-Wire 64Kbps Digital Grade Loop in Combination - Zone 3		3	UNCDX	UDL64	34.74	126.66	89.12	59.35	14.61						
	OCU-DP COCI (data) - in combination - per month (2.4-64kbs)			UNCDX	1D1DD	1.19	6.59	4.73	0.00	0.00						
2-WIRE ISDN LOOP FOR USE IN COMBINATION																
	2-Wire ISDN Loop in Combination - Zone 1		1	UNCNX	U1L2X	25.21	117.58	80.03	53.05	10.61						
	2-Wire ISDN Loop in Combination - Zone 2		2	UNCNX	U1L2X	32.76	117.58	80.03	53.05	10.61						
	2-Wire ISDN Loop in Combination - Zone 3		3	UNCNX	U1L2X	37.70	117.58	80.03	53.05	10.61						
	2-wire ISDN COCI (BRITE) - in combination - per month			UNCNX	UC1CA	2.56	6.59	4.73								
4-WIRE DS1 DIGITAL LOOP FOR USE IN A COMBINATION																
	4-Wire DS1 Digital Loop in Combination - Zone 1		1	UNC1X	USLXX	90.87	253.03	157.89	44.80	11.73						
	4-Wire DS1 Digital Loop in Combination - Zone 2		2	UNC1X	USLXX	155.43	253.03	157.89	44.80	11.73						
	4-Wire DS1 Digital Loop in Combination - Zone 3		3	UNC1X	USLXX	261.89	253.03	157.89	44.80	11.73						
	DS1 COCI in combination per month			UNC1X	UC1D1	8.64	6.59	4.73								
2 WIRE VOICE GRADE INTEROFFICE TRANSPORT FOR USE IN A COMBINATION																
	Interoffice Transport - 2-wire VG - Dedicated- Per Mile Per Month			UNCVX	1L5XX	0.0134										
	Interoffice Transport - 2-wire VG - Dedicated - Facility Termination per month			UNCVX	U1TV2	19.44	40.63	27.47	16.77	6.91						
4 WIRE VOICE GRADE INTEROFFICE TRANSPORT FOR USE IN A COMBINATION																
	Interoffice Transport - 4-wire VG - Dedicated - Per Mile Per Month			UNCVX	1L5XX	0.0134										
	Interoffice Transport - 4-wire VG - Dedicated - Facility Termination per month			UNCVX	U1TV4	17.03	40.63	27.47	16.77	6.91						
DS1 INTEROFFICE TRANSPORT FOR COMBINATION																
	Interoffice Transport - Dedicated - DS1 combination - Per Mile per month			UNC1X	1L5XX	0.27										
	Interoffice Transport - Dedicated - DS1 combination - Facility Termination per month			UNC1X	U1TF1	61.71	89.47	81.99	16.39	14.48						
	1/0 Channelization System in combination Per Month			UNC1X	MQ1	107.57	91.24	62.71	10.56	9.81						
DS3 INTEROFFICE TRANSPORT FOR USE IN A COMBINATION																
	Interoffice Transport - Dedicated - DS3 combination - Per Mile Per Month			UNC3X	1L5XX	6.42										
	Interoffice Transport - Dedicated - DS3 - Facility Termination per month			UNC3X	U1TF3	704.52	279.37	163.12	60.33	58.59						
STS-1 INTEROFFICE TRANSPORT FOR USE IN COMBINATION																
	Interoffice Transport - Dedicated - STS-1 combination - Per Mile Per Month			UNCSX	1L5XX	6.42										
	Interoffice Transport - Dedicated - STS-1 combination - Facility Termination per month			UNCSX	U1TFS	704.44	279.37	163.12	60.33	58.59						
4-WIRE 56 KBPS DIGITAL LOOP WITH 56 KBPS INTEROFFICE TRANSPORT																
	4-wire 56 kbps Local Loop in combination - Zone 1		1	UNCDX	UDL56	29.93	126.66	89.12	59.35	14.61						
	4-wire 56 kbps Local Loop in combination - Zone 2		2	UNCDX	UDL56	33.99	126.66	89.12	59.35	14.61						
	4-wire 56 kbps Local Loop in combination - Zone 3		3	UNCDX	UDL56	34.74	126.66	89.12	59.35	14.61						
	Interoffice Transport - Dedicated - 4-wire 56 kbps combination - Per Mile per month			UNCDX	1L5XX	0.0134										
	Interoffice Transport - Dedicated - 4-wire 56 kbps combination - Facility Termination per month			UNCDX	U1TD5	13.41	40.63	27.47	16.77	6.91						
4-WIRE 64 KBPS DIGITAL EXTENDED LOOP WITH 64 KBPS INTEROFFICE TRANSPORT																
	4-wire 64 kbps Lcoal Loop in Combination - Zone 1		1	UNCDX	UDL64	29.93	126.66	89.12	59.35	14.61						
	4-wire 64 kbps Lcoal Loop in Combination - Zone 2		2	UNCDX	UDL64	33.99	126.66	89.12	59.35	14.61						
	4-wire 64 kbps Lcoal Loop in Combination - Zone 3		3	UNCDX	UDL64	34.74	126.66	89.12	59.35	14.61						

CATEGORY	RATE ELEMENTS	Interim	Zone	BCS	USOC	RATES ($)					Svc Order Submitted Elec per LSR	Svc Order Submitted Manually per LSR	Incremental Charge - Manual Svc Order vs. Electronic-1st	Incremental Charge - Manual Svc Order vs. Electronic-Add'l	Incremental Charge - Manual Svc Order vs. Electronic-Disc 1st	Incremental Charge - Manual Svc Order vs. Electronic-Disc Add'l
						Rec	Nonrecurring		Nonrecurring Disconnect		OSS Rates ($)					
							First	Add'l	First	Add'l	SOMEC	SOMAN	SOMAN	SOMAN	SOMAN	SOMAN
	Interoffice Transport - Dedicated - 4-wire 64 kbps combination - Per Mile per month			UNCDX	1L5XX	0.0134										
	Interoffice Transport - Dedicated - 4-wire 64 kbps combination - Facility Termination per month			UNCDX	U1TD6	13.41	40.63	27.47	16.77	6.91						
4-WIRE 56 KBPS DIGITAL EXTENDED LOOP WITH DS0 INTEROFFICE TRANSPORT																
	4-wire 56 kbps Local Loop in combination - Zone 1		1	UNCDX	UDL56	29.93	126.66	89.12	59.35	14.61						
	4-wire 56 kbps Local Loop in combination - Zone 2		2	UNCDX	UDL56	33.99	126.66	89.12	59.35	14.61						
	4-wire 56 kbps Local Loop in combination - Zone 3		3	UNCDX	UDL56	34.74	126.66	89.12	59.35	14.61						
	4-wiree 56 kbps Interoffice Transport - Dedicated - Per Mile per month			UNCDX	1L5XX	0.0134										
	4-wire 56 kbps Interoffice Transport - Dedicated - Facility Termination per month			UNCDX	U1TD5	13.41	40.63	27.47	16.77	6.91						
4-WIRE 64 KBPS DIGITAL EXTENDED LOOP WITH DS0 INTEROFFICE TRANSPORT																
	4-wire 64 kbps Local Loop in combination - Zone 1		1	UNCDX	UDL64	29.93	126.66	89.12	59.35	14.61						
	4-wire 64 kbps Local Loop in combination - Zone 2		2	UNCDX	UDL64	33.99	126.66	89.12	59.35	14.61						
	4-wire 64 kbps Local Loop in combination - Zone 3		3	UNCDX	UDL64	34.74	126.66	89.12	59.35	14.61						
	I4-wire 65 kbps Interoffice Transport - Dedicated - Per Mile per month			UNCDX	1L5XX	0.0134										
	4-wire 64 kbps Interoffice Transport - Dedicated - Facility Termination per month			UNCDX	U1TD6	13.41	40.63	27.47	16.77	6.91						
DS1 DIGITAL LOOP AND DS1 INTERFOFFICE TRANSPORT																
	4-Wire DS1 Digital Loop in Combination - Zone 1		1	UNC1X	USLXX	90.87	253.03	157.89	44.80	11.73						
	4-Wire DS1 Digital Loop in Combination - Zone 2		2	UNC1X	USLXX	155.43	253.03	157.89	44.80	11.73						
	4-Wire DS1 Digital Loop in Combination - Zone 3		3	UNC1X	USLXX	261.89	253.03	157.89	44.80	11.73						
	Interoffice Transport - Dedicated - DS1 combination - Per Mile per month			UNC1X	1L5XX	0.27										
	Interoffice Transport - Dedicated - DS1 combination - Facility Termination per month			UNC1X	U1TF1	61.71	89.47	81.99	16.39	14.48						
DS3 DIGITAL LOOP WITH DEDICATED DS3 INTEROFFICE TRANSPORT																
	DS3 Local Loop in combination - per mile per month			UNC3X	1L5ND	12.26										
	DS3 Local Loop in combination - Facility Termination per month			UNC3X	UE3PX	306.36	452.52	264.53	119.75	83.77						
	Interoffice Transport - Dedicated - DS3 - Per Mile per month			UNC3X	1L5XX	6.42										
	Interoffice Transport - Dedicated - DS3 combination - Facility Termination per month			UNC3X	U1TF3	704.52	279.37	163.12	60.33	58.59						
STS-1 DIGITAL LOOP WITH DEDICATED STS-1 INTEROFFICE TRANSPORT																
	STS-1 Local Lolp in combination - per mile per month			UNCSX	1L5ND	12.26										
	STS-1 Local Loop in combination - Facility Termination per month			UNCSX	UDLS1	313.49	452.52	264.53	119.75	83.77						
	Interoffice Transport - Dedicated - STS-1 combination - per mile per month			UNCSX	1L5XX	6.42										
	Interoffice Transport - Dedicated - STS-1 combination - Facility Termination per month			UNCSX	U1TFS	704.44	279.37	163.12	60.33	58.59						
ADDITIONAL NETWORK ELEMENTS																
	When used as a part of a currently combined facility, the non-recurrng charges do not apply, but a Switch As Is charge does apply.															
	When used as ordinarily combined network elements in All States, the non-recurring charges apply and the Switch As Is Charge does not.															
	Commingling Authorization			UNCVX, UNCDX, UNC1X, UNC3X, UNCSX, U1TD1, U1TD3, U1TS1, UE3, UDLSX, U1TVX, U1TDX, U1TUB	CMGAU	0.00	0.00	0.00	0.00	0.00						
	Nonrecurring Currently Combined Network Elements "Switch As Is" Charge (One applies to each combination)															
	Nonrecurring Currently Combined Network Elements Switch -As-Is Charge			UNCVX, UNCDX, UNC1X, UNC3X, UNCSX	UNCCC		5.61	5.61	7.00	7.00						
	Optional Features & Functions:															
	Clear Channel Capability Extended Frame Option - per DS1	I		U1TD1, ULDD1,UNC1X	CCOEF		0.00	0.00	0.00	0.00						
	Clear Channel Capability Super FrameOption - per DS1	I		U1TD1, ULDD1,UNC1X	CCOSF		0.00	0.00	0.00	0.00						
	Clear Channel Capability (SF/ESF) Option - Subsequent Activity - per DS1	I		ULDD1, U1TD1, UNC1X, USL	NRCCC		185.26	23.86	1.99	0.78						

CATEGORY	RATE ELEMENTS	Interim	Zone	BCS	USOC	RATES ($)					Svc Order Submitted Elec per LSR	Svc Order Submitted Manually per LSR	Incremental Charge - Manual Svc Order vs. Electronic-1st	Incremental Charge - Manual Svc Order vs. Electronic-Add'l	Incremental Charge - Manual Svc Order vs. Electronic-Disc 1st	Incremental Charge - Manual Svc Order vs. Electronic-Disc Add'l
						Rec	Nonrecurring		Nonrecurring Disconnect		OSS Rates ($)					
							First	Add'l	First	Add'l	SOMEC	SOMAN	SOMAN	SOMAN	SOMAN	SOMAN
	C-bit Parity Option - Subsequent Activity - per DS3	i		U1TD3, ULDD3, UE3, UNC3X	NRCC3		219.58	7.69	0.737	0.00						
	MULTIPLEXERS															
	DS1 to DS0 Channel System per month			UNC1X	MQ1	107.57	91.24	62.71	10.56	9.81						
	OCU-DP COCI (data) - DS1 to DS0 Channel System - per month (2.4-64kbs) used for a Local Loop			UDL	1D1DD	1.19	6.59	4.73								
	OCU-DP COCI (data) - DS1 to DS0 Channel System - per month (2.4-64kbs) used for connection to a channelized DS1 Local Channel in the same SWC as collocation			U1TUD	1D1DD	1.19	6.59	4.73								
	2-wire ISDN COCI (BRITE) - DS1 to DS0 Channel Systsem - per month for a Local Loop			UDN	UC1CA	2.56	6.59	4.73								
	2-wire ISDN COCI (BRITE) - DS1 to DS0 Channel Systsem - per month used for connection to a channelized DS1 Local Channel in the same SWC as collocation			U1TUB	UC1CA	2.56	6.59	4.73								
	Voice Grade COCI - DS1 to DS0 Channel System - per month used for a Local Loop			UEA	1D1VG	0.56	6.59	4.73								
	Voice Grade COCI - DS1 to DS0 Channel System - per month used for connection to a channelized DS1 Local Channel in the same SWC as collocation			U1TUC	1D1VG	0.56	6.59	4.73								
	DS3 to DS1 Channel System per month			UNC3X	MQ3	144.02	178.54	94.18	33.33	31.90						
	STS-1 to DS1 Channel System per month			UNCSX	MQ3	144.02	178.54	94.18	33.33	31.90						
	DS1 COCI used with Loop per month			USL	UC1D1	8.64	6.59	4.73								
	DS1 COCI (used for connection to a channelized DS1 Local Channel in the same SWC as collocation) per month			U1TUA	UC1D1	8.64	6.59	4.73								
	DS1 COCI used with Interoffice Channel per month			U1TD1	UC1D1	8.64	6.59	4.73								
	DS3 Interface Unit (DS1 COCI) used with Local Channel per month			ULDD1	UC1D1	8.64	6.59	4.73								
UNBUNDLED LOCAL EXCHANGE SWITCHING(PORTS)																
	The Exchange Switching Port Rates Reflected Here Apply to Embedded Base Switching Ports as of March 10, 2005 and Consist of the TELRIC Cost Based Rates Plus $1.00 in Accordance with the TRRO.															
	Exchange Ports															
	NOTE: Although the Port Rate includes all available features in GA, KY, LA & TN, the desired features will need to be ordered using retail USOCs															
	2-WIRE VOICE GRADE LINE PORT RATES (RES)															
	Exchange Ports - 2-Wire Analog Line Port- Res.			UEPSR	UEPRL	2.65	2.38	2.28	1.42	1.33						
	Exchange Ports - 2-Wire Analog Line Port with Caller ID - Res.			UEPSR	UEPRC	2.65	2.38	2.28	1.42	1.33						
	Exchange Ports - 2-Wire Analog Line Port outgoing only - Res.			UEPSR	UEPRO	2.65	2.38	2.28	1.42	1.33						
	Exchange Ports - 2-Wire VG unbundled SC extended local dialing parity Port with Caller ID - Res.			UEPSR	UEPAU	2.65	2.38	2.28	1.42	1.33						
	Exchange Ports - 2-Wire VG unbundled South Carolina Area Calling port with Caller ID - Res (LW8)			UEPSR	UEPAJ	2.65	2.38	2.28	1.42	1.33						
	Exchange Ports - 2-Wire VG unbundled res, low usage line port with Caller ID (LUM)			UEPSR	UEPAP	2.65	2.38	2.28	1.42	1.33						
	Exchange Ports - 2-Wire VG South Carolina Residence Dialing Plan without Caller ID			UEPSR	UEPWL	2.65	2.38	2.28	1.42	1.33						
	Exchange Ports - 2-Wire VG South Carolina Residence Area Calling Plan without Caller ID capability			UEPSR	UEPRS	2.65	2.38	2.28	1.42	1.33						
	2-Wire voice unbundled Low Usage Line Port without Caller ID Capability			UEPSR	UEPRT	2.65	2.38	2.28	1.42	1.33						
	Subsequent Activity			UEPSR	USASC	0.00	0.00	0.00								
	FEATURES															
	All Available Vertical Features			UEPSR	UEPVF	3.04	0.00	0.00								
	2-WIRE VOICE GRADE LINE PORT RATES (BUS)															
	Exchange Ports - 2-Wire Analog Line Port without Caller ID - Bus			UEPSB	UEPBL	2.65	2.38	2.28	1.42	1.33						
	Exchange Ports - 2-Wire VG unbundled Line Port with unbundled port with Caller+E484 ID - Bus.			UEPSB	UEPBC	2.65	2.38	2.28	1.42	1.33						
	Exchange Ports - 2-Wire Analog Line Port outgoing only - Bus.			UEPSB	UEPBO	2.65	2.38	2.28	1.42	1.33						
	Exchange Ports - 2-Wire VG unbundled SC extended local dialing parity Port with Caller ID - Bus.			UEPSB	UEPAZ	2.65	2.38	2.28	1.42	1.33						
	Exhange Ports - 2-Wire VG unbundled incoming only port with Caller ID - Bus			UEPSB	UEPB1	2.65	2.38	2.28	1.42	1.33						

CATEGORY	RATE ELEMENTS	Interim	Zone	BCS	USOC	RATES ($)					Svc Order Submitted Elec per LSR	Svc Order Submitted Manually per LSR	Incremental Charge - Manual Svc Order vs. Electronic-1st	Incremental Charge - Manual Svc Order vs. Electronic-Add'l	Incremental Charge - Manual Svc Order vs. Electronic-Disc 1st	Incremental Charge - Manual Svc Order vs. Electronic-Disc Add'l
						Rec	Nonrecurring		Nonrecurring Disconnect		OSS Rates ($)					
							First	Add'l	First	Add'l	SOMEC	SOMAN	SOMAN	SOMAN	SOMAN	SOMAN
	Exchange Ports - 2-Wire VG unbundled South Carolina Bus Area Calling Port with Caller ID - Bus (LMB)			UEPSB	UEPAB	2.65	2.38	2.28	1.42	1.33						
	Exchange Ports - 2-Wire Voice South Carolina Business Dialing Plan without Caller ID			UEPSB	UEPWM	2.65	2.38	2.28	1.42	1.33						
	Exchange Ports - 2-Wire Voice South Carolina Business Area Calling Port without Caller ID			UEPSB	UEPBB	2.65	2.38	2.28	1.42	1.33						
	2-Wire voice unbundled Incoming Only Port without Caller ID Capability			UEPSB	UEPBE	2.65	2.38	2.28	1.42	1.33						
	Subsequent Activity			UEPSB	USASC	0.00	0.00	0.00								
FEATURES																
	All Available Vertical Features			UEPSB	UEPVF	3.04	0.00	0.00								
	All Available Vertical Features					3.04	0.00	0.00								
EXCHANGE PORT RATES (DID & PBX)																
	2-Wire VG Unbundled 2-Way PBX Trunk - Res			UEPSE	UEPRD	2.65	31.34	14.88	13.97	0.90						
	2-Wire VG Line Side Unbundled 2-Way PBX Trunk - Bus			UEPSP	UEPPC	2.65	31.34	14.88	13.97	0.90						
	2-Wire VG Line Side Unbundled Outward PBX Trunk - Bus			UEPSP	UEPPO	2.65	31.34	14.88	13.97	0.90						
	2-Wire VG Line Side Unbundled Incoming PBX Trunk - Bus			UEPSP	UEPP1	2.65	31.34	14.88	13.97	0.90						
	2-Wire Analog Long Distance Terminal PBX Trunk - Bus			UEPSP	UEPLD	2.65	31.34	14.88	13.97	0.90						
	2-Wire Voice Unbundled PBX LD Terminal Ports			UEPSP	UEPLD	2.65	31.34	14.88	13.97	0.90						
	2-Wire Vice Unbundled 2-Way PBX Usage Port			UEPSP	UEPXA	2.65	31.34	14.88	13.97	0.90						
	2-Wire Voice Unbundled PBX Toll Terminal Hotel Ports			UEPSP	UEPXB	2.65	31.34	14.88	13.97	0.90						
	2-Wire Voice Unbundled PBX LD DDD Terminals Port			UEPSP	UEPXC	2.65	31.34	14.88	13.97	0.90						
	2-Wire Voice Unbundled PBX LD Terminal Switchboard Port			UEPSP	UEPXD	2.65	31.34	14.88	13.97	0.90						
	2-Wire Voice Unbundled PBX LD Terminal Switchboard IDD Capable Port			UEPSP	UEPXE	2.65	31.34	14.88	13.97	0.90						
	2-Wire Voice Unbundled 2-Way PBX Hotel/Hospital Economy Administrative Calling Port			UEPSP	UEPXL	2.65	31.34	14.88	13.97	0.90						
	2-Wire Voice Unbundled 2-Way PBX Hotel/Hospital Economy Room Calling Port			UEPSP	UEPXM	2.65	31.34	14.88	13.97	0.90						
	2-Wire Voice Unbundled 1-Way Outgoing PBX Hotel/Hospital Discount Room Calling Port			UEPSP	UEPXO	2.65	31.34	14.88	13.97	0.90						
	2-Wire Voice Unbundled 1-Way Outgoing PBX Measured Port			UEPSP	UEPXS	2.65	31.34	14.88	13.97	0.90						
	2-Wire Voice Unbundled 2-Way PBX South Carolina Area Plus Calling Port			UEPSP	UEPXT	2.65	31.34	14.88	13.97	0.90						
	Subsequent Activity			UEPSP	USASC	0.00	0.00	0.00								
FEATURES																
	All Available Vertical Features			UEPSP UEPSE	UEPVF	3.04	0.00	0.00								
Local Switching Features offered with Port																
NOTE: Transmission/usage charges associated with POTS circuit switched usage will also apply to circuit switched voice and/or circuit switched data transmission by B-Channels associated with 2-wire ISDN ports.																
NOTE: Access to B Channel or D Channel Packet capabilities will be available only through BFR/New Business Request Process. Rates for the packet capabilities will be determined via the Bona Fide Request/New Business Request Process.																
2-WIRE VOICE GRADE LINE PORT RATES (DID)																
	Exchange Ports - 2-Wire DID Port			UEPEX	UEPP2	9.86	119.57	18.78	60.03	3.77						
2-WIRE VOICE GRADE LINE PORT RATES (ISDN-BRI)																
	Exchange Ports - 2-Wire ISDN Port (See Notes below.)			UEPTX, UEPSX	U1PMA	14.38	72.93	53.11	47.90	10.76						
	All Features Offered			UEPTX, UEPSX	UEPVF	3.04	0.00	0.00								
	Exchange Ports - 2-Wire ISDN Port -- Channel Profiles			UEPTX, UEPSX	U1UMA	0.00	0.00	0.00								
NOTE: Transmission/usage charges associated with POTS circuit switched usage will also apply to circuit switched voice and/or circuit switched data transmission by B-Channels associated with 2-wire ISDN ports.																
NOTE: Access to B Channel or D Channel Packet capabilities will be available only through BFR/New Business Request Process. Rates for the packet capabilities will be determined via the Bona Fide Request/New Business Request Process.																
UNBUNDLED PORT with REMOTE CALL FORWARDING CAPABILITY																
UNBUNDLED REMOTE CALL FORWARDING SERVICE - RESIDENCE																
	Unbundled Remote Call Forwarding Service, Area Calling, Res			UEPVR	UERAC	2.65	2.38	2.28	1.42	1.33						
	Unbundled Remote Call Forwarding Service, Local Calling - Res			UEPVR	UERLC	2.65	2.38	2.28	1.42	1.33						
	Unbundled Remote Call Forwarding Service, InterLATA - Res			UEPVR	UERTE	2.65	2.38	2.28	1.42	1.33						
	Unbundled Remote Call Forwarding Service, IntraLATA - Res			UEPVR	UERTR	2.65	2.38	2.28	1.42	1.33						
Non-Recurring																
	Unbundled Remote Call Forwarding Service - Conversion - Switch-as-is			UEPVR	USAC2		0.10	0.10								
	Unbundled Remote Call Forwarding Service - Conversion with allowed change (PIC and LPIC)			UEPVR	USACC		0.10	0.10								
UNBUNDLED REMOTE CALL FORWARDING - Bus																
	Unbundled Remote Call Forwarding Service, Area Calling - Bus			UEPVB	UERAC	2.65	2.38	2.28	1.42	1.33						
	Unbundled Remote Call Forwarding Service, Local Calling - Bus			UEPVB	UERLC	2.65	2.38	2.28	1.42	1.33						

UNBUNDLED NETWORK ELEMENTS - South Carolina														Attachment: 2 Ex. A				
CATEGORY		RATE ELEMENTS	Interim	Zone	BCS	USOC	RATES ($)					Svc Order Submitted Elec per LSR	Svc Order Submitted Manually per LSR	Incremental Charge - Manual Svc Order vs. Electronic-1st	Incremental Charge - Manual Svc Order vs. Electronic-Add'l	Incremental Charge - Manual Svc Order vs. Electronic-Disc 1st	Incremental Charge - Manual Svc Order vs. Electronic-Disc Add'l	
							Rec	Nonrecurring		Nonrecurring Disconnect		OSS Rates ($)						
								First	Add'l	First	Add'l	SOMEC	SOMAN	SOMAN	SOMAN	SOMAN	SOMAN	
		Unbundled Remote Call Forwarding Service, InterLATA - Bus			UEPVB	UERTE	2.65	2.38	2.28	1.42	1.33							
		Unbundled Remote Call Forwarding Service, IntraLATA - Bus			UEPVB	UERTR	2.65	2.38	2.28	1.42	1.33							
		Unbundled Remote Call Forwarding Service Expanded and Exception Local Calling			UEPVB	UERVJ	2.65	2.38	2.28	1.42	1.33							
	Non-Recurring																	
		Unbundled Remote Call Forwarding Service - Conversion - Switch-as-is			UEPVB	USAC2		0.10	0.10									
		Unbundled Remote Call Forwarding Service - Conversion with allowed change (PIC and LPIC)			UEPVB	USACC		0.10	0.10									
UNBUNDLED LOCAL SWITCHING, PORT USAGE																		
	End Office Switching (Port Usage)																	
		End Office Switching Function, Per MOU					0.0010519											
		End Office Trunk Port - Shared, Per MOU					0.0002136											
	Tandem Switching (Port Usage) (Local or Access Tandem)																	
		Tandem Switching Function Per MOU					0.0001634											
		Tandem Trunk Port - Shared, Per MOU					0.0002863											
		Tandem Switching Function Per MOU (Melded)					0.00004951											
		Tandem Trunk Port - Shared, Per MOU (Melded)					0.000086749											
	Melded Factor: 30.30% of the Tandem Rate																	
	Common Transport																	
		Common Transport - Per Mile, Per MOU					0.0000045											
		Common Transport - Facilities Termination Per MOU					0.0004095											
UNBUNDLED PORT/LOOP COMBINATIONS - COST BASED RATES																		
	>Cost Based Rates are applied where BellSouth is required by FCC and/or State Commission rule to provide Unbundled Local Switching or Switch Ports.																	
	> The UNE-P Switching Port Rates Reflected in the Cost Based Section Apply to Embedded Base UNE-Ps as of March 10, 2005 and Consist of the TELRIC Cost Based Rates Plus $1.00 in Accordance with the TRRO.																	
	>Features shall apply to the Unbundled Port/Loop Combination - Cost Based Rate section in the same manner as they are applied to the Stand-Alone Unbundled Port section of this Rate Exhibit.																	
	>End Office and Tandem Switching Usage and Common Transport Usage rates in the Port section of this rate exhibit shall apply to all combinations of loop/port network elements except for UNE Coin Port/Loop Combinations.																	
	>The first and additional Port nonrecurring charges apply to Not Currently Combined Combos. For Currently Combined Combos the nonrecurring charges shall be those identified in the Nonrecurring - Currently Combined sections.																	
	2-WIRE VOICE GRADE LOOP WITH 2-WIRE LINE PORT (RES)																	
	UNE Port/Loop Combination Rates																	
		2-Wire VG Loop/Port Combo - Zone 1					15.89											
		2-Wire VG Loop/Port Combo - Zone 2					22.52											
		2-Wire VG Loop/Port Combo - Zone 3					28.17											
	UNE Loop Rates																	
		2-Wire Voice Grade Loop (SL1) - Zone 1		1	UEPRX	UEPLX	13.76											
		2-Wire Voice Grade Loop (SL1) - Zone 2		2	UEPRX	UEPLX	20.38											
		2-Wire Voice Grade Loop (SL1) - Zone 3		3	UEPRX	UEPLX	26.04											
	2-Wire Voice Grade Line Port Rates (Res)																	
		2-Wire voice unbundled port - residence			UEPRX	UEPRL	2.13	40.30	19.90	24.98	6.65							
		2-Wire voice unbundled port with Caller ID - res			UEPRX	UEPRC	2.13	40.30	19.90	24.98	6.65							
		2-Wire voice unbundled port outgoing only - res			UEPRX	UEPRO	2.13	40.30	19.90	24.98	6.65							
		2-Wire voice Grade unbundled South Carolina extended local dialing parity port with Caller ID - res			UEPRX	UEPAU	2.13	40.30	19.90	24.98	6.65							
		2-Wire voice unbundled South Carolina Area Calling port with Caller ID - res (LW8)			UEPRX	UEPAJ	2.13	40.30	19.90	24.98	6.65							
		2-Wire voice unbundles res, low usage line port with Caller ID (LUM)			UEPRX	UEPAP	2.13	37.93	16.72									
		2-Wire Voice Unbundled South Carolina Residence Dialing Plan without Caller ID			UEPRX	UEPWL	2.13	40.30	19.90	24.98	6.65							
		2-Wire voice unbundled South Carolina Area Calling Port without Caller ID Capability			UEPRX	UEPRS	2.13	40.30	19.90	24.98	6.65							
		2-Wire voice unbundled Low Usage Line Port without Caller ID Capability			UEPRX	UEPRT	2.13	40.30	19.90	24.98	6.65							
	FEATURES																	
		All Features Offered			UEPRX	UEPVF	3.04	0.00	0.00									
	NONRECURRING CHARGES (NRCs) - CURRENTLY COMBINED																	
		2-Wire Voice Grade Loop / Line Port Combination - Conversion - Switch-as-is			UEPRX	USAC2		0.10	0.10									

CATEGORY	RATE ELEMENTS	Interim	Zone	BCS	USOC	RATES ($)					Svc Order Submitted Elec per LSR	Svc Order Submitted Manually per LSR	Incremental Charge - Manual Svc Order vs. Electronic-1st	Incremental Charge - Manual Svc Order vs. Electronic-Add'l	Incremental Charge - Manual Svc Order vs. Electronic-Disc 1st	Incremental Charge - Manual Svc Order vs. Electronic-Disc Add'l
						Rec	Nonrecurring		Nonrecurring Disconnect		OSS Rates ($)					
							First	Add'l	First	Add'l	SOMEC	SOMAN	SOMAN	SOMAN	SOMAN	SOMAN
	2-Wire Voice Grade Loop / Line Port Combination - Conversion - Switch with change			UEPRX	USACC		0.10	0.10								
	2-Wire Voice Grade Loop / Line Port Platform - Installation Charge at QuickService location - Not Conversion of Existing Service			UEPRX	URECC		0.10									
ADDITIONAL NRCs																
	2-Wire Voice Grade Loop/Line Port Combination - Subsequent Activity			UEPRX	USAS2	0.00	0.00	0.00								
	Unbundled Miscellaneous Rate Element, Tag Loop at End User Premise			UEPRX	URETL		8.33	0.83								
OFF/ON PREMISES EXTENSION CHANNELS																
	2 Wire Analog Voice Grade Extension Loop – Non-Design		1	UEPRX	UEAEN	14.94	37.92	17.62	23.56	5.32						
	2 Wire Analog Voice Grade Extension Loop – Non-Design		2	UEPRX	UEAEN	21.39	37.92	17.62	23.56	5.32						
	2 Wire Analog Voice Grade Extension Loop – Non-Design		3	UEPRX	UEAEN	26.72	37.92	17.62	23.56	5.32						
	2 Wire Analog Voice Grade Extension Loop – Design		1	UEPRX	UEAED	16.68	105.98	68.43	53.05	10.61						
	2 Wire Analog Voice Grade Extension Loop – Design		2	UEPRX	UEAED	23.13	105.98	68.43	53.05	10.61						
	2 Wire Analog Voice Grade Extension Loop – Design		3	UEPRX	UEAED	28.46	105.98	68.43	53.05	10.61						
INTEROFFICE TRANSPORT																
	Interoffice Transport - Dedicated - 2 Wire Voice Grade - Facility Termination			UEPRX	U1TV2	24.30	40.63	27.47	16.77	6.91						
	Interoffice Transport - Dedicated - 2 Wire Voice Grade - Per Mile or Fraction Mile			UEPRX	U1TVM	0.0167	0.00	0.00								
2-WIRE VOICE GRADE LOOP WITH 2-WIRE LINE PORT (BUS)																
UNE Port/Loop Combination Rates																
	2-Wire VG Loop/Port Combo - Zone 1					15.89										
	2-Wire VG Loop/Port Combo - Zone 2					22.52										
	2-Wire VG Loop/Port Combo - Zone 3					28.17										
UNE Loop Rates																
	2-Wire Voice Grade Loop (SL1) - Zone 1		1	UEPBX	UEPLX	13.76										
	2-Wire Voice Grade Loop (SL1) - Zone 2		2	UEPBX	UEPLX	20.38										
	2-Wire Voice Grade Loop (SL1) - Zone 3		3	UEPBX	UEPLX	26.04										
2-Wire Voice Grade Line Port (Bus)																
	2-Wire voice unbundled port without Caller ID - bus			UEPBX	UEPBL	2.13	40.30	19.90	24.98	6.65						
	2-Wire voice unbundled port with Caller + E484 ID - bus			UEPBX	UEPBC	2.13	40.30	19.90	24.98	6.65						
	2-Wire voice unbundled port outgoing only - bus			UEPBX	UEPBO	2.13	40.30	19.90	24.98	6.65						
	2-Wire voice Grade unbundled South Carolina extended local dialing parity port with Caller ID - bus			UEPBX	UEPAZ	2.13	40.30	19.90	24.98	6.65						
	2-Wire voice unbundled incoming only port with Caller ID - Bus			UEPBX	UEPB1	2.13	40.30	19.90	24.98	6.65						
	2-Wire voice unbundled South Carolina Bus Area Calling Port with Caller ID (LMB)			UEPBX	UEPAB	2.13	40.30	19.90	24.98	6.65						
	2-Wire Voice Unbundled South Carolina Business Dialing Plan without Caller ID			UEPBX	UEPWM	2.13	40.30	19.90	24.98	6.65						
	2-Wire voice unbundled South Carolina Business Area Calling Port without Caller ID Capability			UEPBX	UEPBB	2.13	40.30	19.90	24.98	6.65						
	2-Wire voice unbundled Incoming Only Port without Caller ID Capability			UEPBX	UEPBE	2.13	40.30	19.90	24.98	6.65						
FEATURES																
	All Features Offered			UEPBX	UEPVF	3.04	0.00	0.00								
NONRECURRING CHARGES (NRCs) - CURRENTLY COMBINED																
	2-Wire Voice Grade Loop / Line Port Combination - Conversion - Switch-as-is			UEPBX	USAC2		0.10	0.10								
	2-Wire Voice Grade Loop / Line Port Combination - Conversion - Switch with change			UEPBX	USACC		0.10	0.10								
ADDITIONAL NRCs																
	2-Wire Voice Grade Loop/Line Port Combination - Subsequent Activity			UEPBX	USAS2		0.00	0.00								
	Unbundled Miscellaneous Rate Element, Tag Loop at End User Premise			UEPBX	URETL		8.33	0.83								
OFF/ON PREMISES EXTENSION CHANNELS																
	2 Wire Analog Voice Grade Extension Loop – Non-Design		1	UEPBX	UEAEN	14.94	37.92	17.62	23.56	5.32						
	2 Wire Analog Voice Grade Extension Loop – Non-Design		2	UEPBX	UEAEN	21.39	37.92	17.62	23.56	5.32						
	2 Wire Analog Voice Grade Extension Loop – Non-Design		3	UEPBX	UEAEN	26.72	37.92	17.62	23.56	5.32						
	2 Wire Analog Voice Grade Extension Loop – Design		1	UEPBX	UEAED	16.68	105.98	68.43	53.05	10.61						
	2 Wire Analog Voice Grade Extension Loop – Design		2	UEPBX	UEAED	23.13	105.98	68.43	53.05	10.61						

CATEGORY	RATE ELEMENTS	Interim	Zone	BCS	USOC	RATES ($)					Svc Order Submitted Elec per LSR	Svc Order Submitted Manually per LSR	Incremental Charge - Manual Svc Order vs. Electronic-1st	Incremental Charge - Manual Svc Order vs. Electronic-Add'l	Incremental Charge - Manual Svc Order vs. Electronic-Disc 1st	Incremental Charge - Manual Svc Order vs. Electronic-Disc Add'l
						Rec	Nonrecurring		Nonrecurring Disconnect		OSS Rates ($)					
							First	Add'l	First	Add'l	SOMEC	SOMAN	SOMAN	SOMAN	SOMAN	SOMAN
	2 Wire Analog Voice Grade Extension Loop – Design		3	UEPBX	UEAED	28.46	105.98	68.43	53.05	10.61						
INTEROFFICE TRANSPORT																
	Interoffice Transport - Dedicated - 2 Wire Voice Grade - Facility Termination			UEPBX	U1TV2	24.30	40.63	27.47	16.77	6.91						
	Interoffice Transport - Dedicated - 2 Wire Voice Grade - Per Mile or Fraction Mile			UEPBX	U1TVM	0.0167	0.00	0.00								
2-WIRE VOICE GRADE LOOP WITH 2-WIRE LINE PORT (RES - PBX)																
UNE Port/Loop Combination Rates																
	2-Wire VG Loop/Port Combo - Zone 1					15.89										
	2-Wire VG Loop/Port Combo - Zone 2					22.52										
	2-Wire VG Loop/Port Combo - Zone 3					28.17										
UNE Loop Rates																
	2-Wire Voice Grade Loop (SL 1) - Zone 1		1	UEPRG	UEPLX	13.76										
	2-Wire Voice Grade Loop (SL 1) - Zone 2		2	UEPRG	UEPLX	20.38										
	2-Wire Voice Grade Loop (SL 1) - Zone 3		3	UEPRG	UEPLX	26.04										
2-Wire Voice Grade Line Port Rates (RES - PBX)																
	2-Wire VG Unbundled Combination 2-Way PBX Trunk Port - Res			UEPRG	UEPRD	2.13	69.26	32.50	37.53	6.22						
FEATURES																
	All Features Offered			UEPRG	UEPVF	3.04	0.00	0.00								
NONRECURRING CHARGES (NRCs) - CURRENTLY COMBINED																
	2-Wire Voice Grade Loop/ Line Port Combination (PBX) - Conversion - Switch-As-Is			UEPRG	USAC2		7.93	1.91								
	2-Wire Voice Grade Loop/ Line Port Combination (PBX) - Conversion - Switch with Change			UEPRG	USACC		7.93	1.91								
ADDITIONAL NRCs																
	2-Wire Voice Grade Loop/ Line Port Combination (PBX) - Subsequent Activity			UEPRG	USAS2	0.00	0.00	0.00								
	PBX Subsequent Activity - Change/Rearrange Multiline Hunt Group						7.34	7.34								
	Unbundled Miscellaneous Rate Element, Tag Loop at End User Premise			UEPRG	URETL		8.33	0.83								
OFF/ON PREMISES EXTENSION CHANNELS																
	Local Channel Voice grade, per termination		1	UEPRG	P2JHX	16.68	105.98	68.43	53.05	10.61						
	Local Channel Voice grade, per termination		2	UEPRG	P2JHX	23.13	105.98	68.43	53.05	10.61						
	Local Channel Voice grade, per termination		3	UEPRG	P2JHX	28.46	105.98	68.43	53.05	10.61						
	Non-Wire Direct Serve Channel Voice Grade		1	UEPRG	SDD2X	17.74	131.88	62.06	90.70	13.42						
	Non-Wire Direct Serve Channel Voice Grade		2	UEPRG	SDD2X	25.16	65.94	31.03	45.35	6.71						
	Non-Wire Direct Serve Channel Voice Grade		3	UEPRG	SDD2X	29.58	65.94	31.03	45.35	6.71						
INTEROFFICE TRANSPORT																
	Interoffice Transport - Dedicated - 2 Wire Voice Grade - Facility Termination			UEPRG	U1TV2	24.30	40.63	27.47	16.77	6.91						
	Interoffice Transport - Dedicated - 2 Wire Voice Grade - Per Mile or Fraction Mile			UEPRG	U1TVM	0.0167	0.00	0.00								
2-WIRE VOICE GRADE LOOP WITH 2-WIRE LINE PORT (BUS - PBX)																
UNE Port/Loop Combination Rates																
	2-Wire VG Loop/Port Combo - Zone 1					15.89										
	2-Wire VG Loop/Port Combo - Zone 2					22.52										
	2-Wire VG Loop/Port Combo - Zone 3					28.17										
UNE Loop Rates																
	2-Wire Voice Grade Loop (SL 1) - Zone 1		1	UEPPX	UEPLX	13.76										
	2-Wire Voice Grade Loop (SL 1) - Zone 2		2	UEPPX	UEPLX	20.38										
	2-Wire Voice Grade Loop (SL 1) - Zone 3		3	UEPPX	UEPLX	26.04										
2-Wire Voice Grade Line Port Rates (BUS - PBX)																
	Line Side Unbundled Combination 2-Way PBX Trunk Port - Bus			UEPPX	UEPPC	2.13	69.26	32.50	37.53	6.22						
	Line Side Unbundled Outward PBX Trunk Port - Bus			UEPPX	UEPPO	2.13	69.26	32.50	37.53	6.22						
	Line Side Unbundled Incoming PBX Trunk Port - Bus			UEPPX	UEPP1	2.13	69.26	32.50	37.53	6.22						
	2-Wire Voice Unbundled PBX LD Terminal Ports			UEPPX	UEPLD	2.13	69.26	32.50	37.53	6.22						
	2-Wire Voice Unbundled 2-Way Combination PBX Usage Port			UEPPX	UEPXA	2.13	69.26	32.50	37.53	6.22						
	2-Wire Voice Unbundled PBX Toll Terminal Hotel Ports			UEPPX	UEPXB	2.13	69.26	32.50	37.53	6.22						
	2-Wire Voice Unbundled PBX LD DDD Terminals Port			UEPPX	UEPXC	2.13	69.26	32.50	37.53	6.22						
	2-Wire Voice Unbundled PBX LD Terminal Switchboard Port			UEPPX	UEPXD	2.13	69.26	32.50	37.53	6.22						

CATEGORY	RATE ELEMENTS	Interim	Zone	BCS	USOC	RATES ($)					Svc Order Submitted Elec per LSR	Svc Order Submitted Manually per LSR	Incremental Charge - Manual Svc Order vs. Electronic-1st	Incremental Charge - Manual Svc Order vs. Electronic-Add'l	Incremental Charge - Manual Svc Order vs. Electronic-Disc 1st	Incremental Charge - Manual Svc Order vs. Electronic-Disc Add'l
						Rec	Nonrecurring		Nonrecurring Disconnect		OSS Rates ($)					
							First	Add'l	First	Add'l	SOMEC	SOMAN	SOMAN	SOMAN	SOMAN	SOMAN
	2-Wire Voice Unbundled PBX LD Terminal Switchboard IDD Capable Port			UEPPX	UEPXE	2.13	69.26	32.50	37.53	6.22						
	2-Wire Voice Unbundled 2-Way PBX Hotel/Hospital Economy Administrative Calling Port			UEPPX	UEPXL	2.13	69.26	32.50	37.53	6.22						
	2-Wire Voice Unbundled 2-Way PBX Hotel/Hospital Economy Room Calling Port			UEPPX	UEPXM	2.13	69.26	32.50	37.53	6.22						
	2-Wire Voice Unbundled 1-Way Outgoing PBX Hotel/Hospital Discount Room Calling Port			UEPPX	UEPXO	2.13	69.26	32.50	37.53	6.22						
	2-Wire Voice Unbundled 1-Way Outgoing PBX Measured Port			UEPPX	UEPXS	2.13	69.26	32.50	37.53	6.22						
	2-Wire Voice Unbundled 2-Way PBX South Carolina Area Plus Calling Port			UEPPX	UEPXT	2.13	69.26	32.50	37.53	6.22						
FEATURES																
	All Features Offered			UEPPX	UEPVF	3.04	0.00	0.00								
NONRECURRING CHARGES (NRCs) - CURRENTLY COMBINED																
	2-Wire Voice Grade Loop/ Line Port Combination (PBX) - Conversion - Switch-As-Is			UEPPX	USAC2		7.93	1.91								
	2-Wire Voice Grade Loop/ Line Port Combination (PBX) - Conversion - Switch with Change			UEPPX	USACC		7.93	1.91								
ADDITIONAL NRCs																
	2-Wire Voice Grade Loop/ Line Port Combination (PBX) - Subsequent Activity			UEPPX	USAS2	0.00	0.00	0.00								
	PBX Subsequent Activity - Change/Rearrange Multiline Hunt Group						7.34	7.34								
	Unbundled Miscellaneous Rate Element, Tag Loop at End User Premise			UEPPX	URETL		8.33	0.83								
OFF/ON PREMISES EXTENSION CHANNELS																
	Local Channel Voice grade, per termination		1	UEPPX	P2JHX	16.68	105.98	68.43	53.05	10.61						
	Local Channel Voice grade, per termination		2	UEPPX	P2JHX	23.13	105.98	68.43	53.05	10.61						
	Local Channel Voice grade, per termination		3	UEPPX	P2JHX	28.46	105.98	68.43	53.05	10.61						
	Non-Wire Direct Serve Channel Voice Grade		1	UEPPX	SDD2X	17.74	131.88	62.06	90.70	13.42						
	Non-Wire Direct Serve Channel Voice Grade		2	UEPPX	SDD2X	25.16	65.94	31.03	45.35	6.71						
	Non-Wire Direct Serve Channel Voice Grade		3	UEPPX	SDD2X	29.58	65.94	31.03	45.35	6.71						
INTEROFFICE TRANSPORT																
	Interoffice Transport - Dedicated - 2 Wire Voice Grade - Facility Termination			UEPPX	U1TV2	24.30	40.63	27.47	16.77	6.91						
	Interoffice Transport - Dedicated - 2 Wire Voice Grade - Per Mile or Fraction Mile			UEPPX	U1TVM	0.0167	0.00	0.00								
2-WIRE VOICE GRADE LOOP WITH 2-WIRE ANALOG LINE COIN PORT																
UNE Port/Loop Combination Rates																
	2-Wire VG Coin Port/Loop Combo – Zone 1					15.89										
	2-Wire VG Coin Port/Loop Combo – Zone 2					22.52										
	2-Wire VG Coin Port/Loop Combo – Zone 3					28.17										
UNE Loop Rates																
	2-Wire Voice Grade Loop (SL1) - Zone 1		1	UEPCO	UEPLX	13.76										
	2-Wire Voice Grade Loop (SL1) - Zone 2		2	UEPCO	UEPLX	20.38										
	2-Wire Voice Grade Loop (SL1) - Zone 3		3	UEPCO	UEPLX	26.04										
2-Wire Voice Grade Line Ports (COIN)																
	2-Wire Coin 2-Way without Operator Screening and without Blocking (SC)			UEPCO	UEPSD	2.13	40.30	19.90	24.98	6.65						
	2-Wire Coin 2-Way with Operator Screening and Blocking: 011, 900/976, 1+DDD (SC)			UEPCO	UEPSA	2.13	40.30	19.90	24.98	6.65						
	2-Wire Coin 2-Way with Operator Screening and 011 Blocking (SC)			UEPCO	UEPSH	2.13	40.30	19.90	24.98	6.65						
	2-Wire Coin 2-Way with Operator Screening and 011 Blocking; with Dialing Parity (SC)			UEPCO	UEPSC	2.13	40.30	19.90	24.98	6.65						
	2-Wire Coin 2-Way with Operator Screening and: 900 Blocking: 900/976, 1+DDD, 011+, and Local (SC)			UEPCO	UEPCC	2.13	40.30	19.90	24.98	6.65						
	2-Wire Coin 2-W Operator Screen: 900 Block: 900/976, 1+DDD, 011+, Local; Enhanced Call OPT 3YV (SC)			UEPCO	UEPCE	2.13	40.30	19.90	24.98	6.65						
	2-Wire Coin 2-W Operator Screen: 900 Block: 900/976, 1+DDD, 011+, Local; Enhanced Call OPT AP7 (SC)			UEPCO	UEPCF	2.13	40.30	19.90	24.98	6.65						
	2-Wire Coin Outward without Blocking and without Operator Screening (SC)			UEPCO	UEPSG	2.13	40.30	19.90	24.98	6.65						

CATEGORY	RATE ELEMENTS	Interim	Zone	BCS	USOC	RATES ($)					Svc Order Submitted Elec per LSR	Svc Order Submitted Manually per LSR	Incremental Charge - Manual Svc Order vs. Electronic-1st	Incremental Charge - Manual Svc Order vs. Electronic-Add'l	Incremental Charge - Manual Svc Order vs. Electronic-Disc 1st	Incremental Charge - Manual Svc Order vs. Electronic-Disc Add'l
						Rec	Nonrecurring		Nonrecurring Disconnect		OSS Rates ($)					
							First	Add'l	First	Add'l	SOMEC	SOMAN	SOMAN	SOMAN	SOMAN	SOMAN
	2-Wire Coin Outward with Operator Screening and 011 Blocking (SC)			UEPCO	UEPSF	2.13	40.30	19.90	24.98	6.65						
	2-Wire Coin Outward with Operator Screening and Blocking: 011, 900/976, 1+DDD (SC)			UEPCO	UEPSJ	2.13	40.30	19.90	24.98	6.65						
	2-Wire Coin Outward with Operator Screening and Blocking: 900/976, 1+DDD, 011+, and Local (SC)			UEPCO	UEPCM	2.13	40.30	19.90	24.98	6.65						
	2-Wire Coin Out Operator Screen & Block: 900/976, 1+DDD, 011+, Local; Enhanced Calling OPT 3YW (SC)			UEPCO	UEPCP	2.13	40.30	19.90	24.98	6.65						
	2-Wire 2-Way Smartline with 900/976 (all states except LA)			UEPCO	UEPCK	2.13	40.30	19.90	24.98	6.65						
	2-Wire Coin Outward Smartline with 900/976 (all states except LA)			UEPCO	UEPCR	2.13	40.30	19.90	24.98	6.65						
ADDITIONAL UNE COIN PORT/LOOP (RC)																
	UNE Coin Port/Loop Combo Usage (Flat Rate)			UEPCO	URECU	4.05	0.00	0.00	0.00	0.00						
NONRECURRING CHARGES - CURRENTLY COMBINED																
	2-Wire Voice Grade Loop / Line Port Combination - Conversion - Switch-as-is			UEPCO	USAC2		0.10	0.10								
	2-Wire Voice Grade Loop / Line Port Combination - Conversion - Switch with change			UEPCO	USACC		0.10	0.10								
ADDITIONAL NRCs																
	2-Wire Voice Grade Loop/Line Port Combination - Subsequent Activity			UEPCO	USAS2		0.00	0.00								
	Unbundled Miscellaneous Rate Element, Tag Loop at End User Premise			UEPCO	URETL		8.33	0.83								
2-WIRE VOICE LOOP/ 2WIRE VOICE GRADE IO TRANSPORT/ 2-WIRE LINE PORT (RES)																
UNE Port/Loop Combination Rates																
	2-Wire VG Loop/IO Tranport/Port Combo - Zone 1					19.00										
	2-Wire VG Loop/IO Tranport/Port Combo - Zone 2					25.45										
	2-Wire VG Loop/IO Tranport/Port Combo - Zone 3					30.78										
UNE Loop Rates																
	2-Wire Voice Grade Loop (SL2) - Zone 1		1	UEPFR	UECF2	16.68										
	2-Wire Voice Grade Loop (SL2) - Zone 2		2	UEPFR	UECF2	23.13										
	2-Wire Voice Grade Loop (SL2) - Zone 3		3	UEPFR	UECF2	28.46										
2-Wire Voice Grade Line Port Rates (Res)																
	2-Wire voice unbundled port - residence			UEPFR	UEPRL	2.32	108.36	70.71	1.42	1.33						
	2-Wire voice unbundled port with Caller ID - res			UEPFR	UEPRC	2.32	108.36	70.71	1.42	1.33						
	2-Wire voice unbundled port outgoing only - res			UEPFR	UEPRO	2.32	108.36	70.71	1.42	1.33						
	2-Wire voice Grade unbundled South Carolina extended local dialing parity port with Caller ID - res			UEPFR	UEPAU	2.32	108.36	70.71	1.42	1.33						
	2-Wire voice unbundled South Carolina Area Calling port with Caller ID - res (LW8)			UEPFR	UEPAJ	2.32	108.36	70.71	1.42	1.33						
	2-Wire voice unbundles res, low usage line port with Caller ID (LUM)			UEPFR	UEPAP	2.32	108.36	70.71	1.42	1.33						
	2-Wire Voice Unbundled South Carolina Residence Dialing Plan without Caller ID			UEPFR	UEPWL	2.32	108.36	70.71	1.42	1.33						
INTEROFFICE TRANSPORT																
	Interoffice Transport - Dedicated - 2 Wire Voice Grade - Facility Termination			UEPFR	U1TV2	19.44	40.63	27.47	16.77	6.91						
	Interoffice Transport - Dedicated - 2 Wire Voice Grade - Per Mile or Fraction Mile			UEPFR	1L5XX	0.0134										
FEATURES																
	All Features Offered			UEPFR	UEPVF	3.04	0.00	0.00								
NONRECURRING CHARGES (NRCs) - CURRENTLY COMBINED																
	2-Wire Loop / Dedicated IO Transport / 2 Wire Line Port Combination - Conversion - Switch-as-is			UEPFR	USAC2		8.50	1.87								
	2-Wire Loop / Dedicated IO Transport / 2 Wire Line Port Combination - Conversion - Switch-With-Change			UEPFR	USACC		8.50	1.87								
	Unbundled Miscellaneous Rate Element, Tag Designed Loop at End User Premise			UEPFR	URETN		11.24	1.10								
2-WIRE VOICE LOOP/ 2WIRE VOICE GRADE IO TRANSPORT/ 2-WIRE LINE PORT (BUS)																
UNE Port/Loop Combination Rates																
	2-Wire VG Loop/IO Tranport/Port Combo - Zone 1					19.00										
	2-Wire VG Loop/IO Tranport/Port Combo - Zone 2					25.45										
	2-Wire VG Loop/IO Tranport/Port Combo - Zone 3					30.78										
UNE Loop Rates																

CATEGORY	RATE ELEMENTS	Interim	Zone	BCS	USOC	RATES ($)					Svc Order Submitted Elec per LSR	Svc Order Submitted Manually per LSR	Incremental Charge - Manual Svc Order vs. Electronic-1st	Incremental Charge - Manual Svc Order vs. Electronic-Add'l	Incremental Charge - Manual Svc Order vs. Electronic-Disc 1st	Incremental Charge - Manual Svc Order vs. Electronic-Disc Add'l
						Rec	Nonrecurring		Nonrecurring Disconnect		OSS Rates ($)					
							First	Add'l	First	Add'l	SOMEC	SOMAN	SOMAN	SOMAN	SOMAN	SOMAN
	2-Wire Voice Grade Loop (SL2) - Zone 1		1	UEPFB	UECF2	16.68										
	2-Wire Voice Grade Loop (SL2) - Zone 2		2	UEPFB	UECF2	23.13										
	2-Wire Voice Grade Loop (SL2) - Zone 3		3	UEPFB	UECF2	28.46										
2-Wire Voice Grade Line Port (Bus)																
	2-Wire voice unbundled port without Caller ID - bus			UEPFB	UEPBL	2.32	108.36	70.71	1.42	1.33						
	2-Wire voice unbundled port with Caller + E484 ID - bus			UEPFB	UEPBC	2.32	108.36	70.71	1.42	1.33						
	2-Wire voice unbundled port outgoing only - bus			UEPFB	UEPBO	2.32	108.36	70.71	1.42	1.33						
	2-Wire voice Grade unbundled South Carolina extended local dialing parity port with Caller ID - bus			UEPFB	UEPAZ	2.32	108.36	70.71	1.42	1.33						
	2-Wire voice unbundled incoming only port with Caller ID - Bus			UEPFB	UEPB1	2.32	108.36	70.71	1.42	1.33						
	2-Wire voice unbundled South Carolina Bus Area Calling Port with Caller ID (LMB)			UEPFB	UEPAB	2.32	108.36	70.71	1.42	1.33						
	2-Wire Voice Unbundled South Carolina Business Dialing Plan without Caller ID			UEPFB	UEPWM	2.32	108.36	70.71	1.42	1.33						
INTEROFFICE TRANSPORT																
	Interoffice Transport - Dedicated - 2 Wire Voice Grade - Facility Termination			UEPFB	U1TV2	19.44	40.63	27.47	16.77	6.91						
	Interoffice Transport - Dedicated - 2 Wire Voice Grade - Per Mile or Fraction Mile			UEPFB	1L5XX	0.0134										
FEATURES																
	All Features Offered			UEPFB	UEPVF	3.04	0.00	0.00								
NONRECURRING CHARGES (NRCs) - CURRENTLY COMBINED																
	2-Wire Loop / Dedicated IO Transport / 2 Wire Line Port Combination - Conversion - Switch-as-is			UEPFB	USAC2		8.50	1.87								
	2-Wire Loop / Dedicated IO Transport / 2 Wire Line Port Combination - Conversion - Switch with change			UEPFB	USACC		8.50	1.87								
	Unbundled Miscellaneous Rate Element, Tag Designed Loop at End User Premise			UEPFB	URETN		11.24	1.10								
2-WIRE VOICE LOOP/ 2WIRE VOICE GRADE IO TRANSPORT/ 2-WIRE LINE PORT (PBX)																
UNE Port/Loop Combination Rates																
	2-Wire VG Loop/IO Tranport/Port Combo - Zone 1					19.00										
	2-Wire VG Loop/IO Tranport/Port Combo - Zone 2					25.45										
	2-Wire VG Loop/IO Tranport/Port Combo - Zone 3					30.78										
UNE Loop Rates																
	2-Wire Voice Grade Loop (SL2) - Zone 1		1	UEPFP	UECF2	16.68										
	2-Wire Voice Grade Loop (SL2) - Zone 2		2	UEPFP	UECF2	23.13										
	2-Wire Voice Grade Loop (SL2) - Zone 3		3	UEPFP	UECF2	28.46										
2-Wire Voice Grade Line Port Rates (BUS - PBX)																
	Line Side Unbundled Combination 2-Way PBX Trunk Port - Bus			UEPFP	UEPPC	2.32	137.32	83.31	67.02	11.51						
	Line Side Unbundled Outward PBX Trunk Port - Bus			UEPFP	UEPPO	2.32	137.32	83.31	67.02	11.51						
	Line Side Unbundled Incoming PBX Trunk Port - Bus			UEPFP	UEPP1	2.32	137.32	83.31	67.02	11.51						
	2-Wire Voice Unbundled PBX LD Terminal Ports			UEPFP	UEPLD	2.32	137.32	83.31	67.02	11.51						
	2-Wire Voice Unbundled 2-Way Combination PBX Usage Port			UEPFP	UEPXA	2.32	137.32	83.31	67.02	11.51						
	2-Wire Voice Unbundled PBX Toll Terminal Hotel Ports			UEPFP	UEPXB	2.32	137.32	83.31	67.02	11.51						
	2-Wire Voice Unbundled PBX LD DDD Terminals Port			UEPFP	UEPXC	2.32	137.32	83.31	67.02	11.51						
	2-Wire Voice Unbundled PBX LD Terminal Switchboard Port			UEPFP	UEPXD	2.32	137.32	83.31	67.02	11.51						
	2-Wire Voice Unbundled PBX LD Terminal Switchboard IDD Capable Port			UEPFP	UEPXE	2.32	137.32	83.31	67.02	11.51						
	2-Wire Voice Unbundled 2-Way PBX Hotel/Hospital Economy Administrative Calling Port			UEPFP	UEPXL	2.32	137.32	83.31	67.02	11.51						
	2-Wire Voice Unbundled 2-Way PBX Hotel/Hospital Economy Room Calling Port			UEPFP	UEPXM	2.32	137.32	83.31	67.02	11.51						
	2-Wire Voice Unbundled 1-Way Outgoing PBX Hotel/Hospital Discount Room Calling Port			UEPFP	UEPXO	2.32	137.32	83.31	67.02	11.51						
	2-Wire Voice Unbundled 1-Way Outgoing PBX Measured Port			UEPFP	UEPXS	2.32	137.32	83.31	67.02	11.51						
	2-Wire Voice Unbundled 2-Way PBX South Carolina Area Plus Calling Port			UEPFP	UEPXT	2.32	137.32	83.31	67.02	11.51						
INTEROFFICE TRANSPORT																
	Interoffice Transport - Dedicated - 2 Wire Voice Grade - Facility Termination			UEPFP	U1TV2	19.44	40.63	27.47	16.77	6.91						
	Interoffice Transport - Dedicated - 2 Wire Voice Grade - Per Mile or Fraction Mile			UEPFP	1L5XX	0.0134										
FEATURES																

UNBUNDLED NETWORK ELEMENTS - South Carolina

Attachment: 2 Ex. A

CATEGORY	RATE ELEMENTS	Interim	Zone	BCS	USOC	RATES ($)					Svc Order Submitted Elec per LSR	Svc Order Submitted Manually per LSR	Incremental Charge - Manual Svc Order vs. Electronic-1st	Incremental Charge - Manual Svc Order vs. Electronic-Add'l	Incremental Charge - Manual Svc Order vs. Electronic-Disc 1st	Incremental Charge - Manual Svc Order vs. Electronic-Disc Add'l
						Rec	Nonrecurring		Nonrecurring Disconnect		OSS Rates ($)					
							First	Add'l	First	Add'l	SOMEC	SOMAN	SOMAN	SOMAN	SOMAN	SOMAN
	All Features Offered			UEPFP	UEPVF	3.04	0.00	0.00								
	NONRECURRING CHARGES (NRCs) - CURRENTLY COMBINED															
	2-Wire Loop / Dedicated IO Transport / 2 Wire Line Port Combination - Conversion - Switch-as-is			UEPFP	USAC2		8.50	1.87								
	2-Wire Loop / Dedicated IO Transport / 2 Wire Line Port Combination - Conversion - Switch with change			UEPFP	USACC		8.50	1.87								
	Unbundled Miscellaneous Rate Element, Tag Designed Loop at End User Premise			UEPFP	URETN		11.24	1.10								
	2-WIRE VOICE GRADE LOOP- BUS ONLY - WITH 2-WIRE DID TRUNK PORT															
	UNE Port/Loop Combination Rates															
	2-Wire VG Loop/2-Wire DID Trunk Port Combo - UNE Zone 1					24.75										
	2-Wire VG Loop/2-Wire DID Trunk Port Combo - UNE Zone 2					31.20										
	2-Wire VG Loop/2-Wire DID Trunk Port Combo - UNE Zone 3					36.52										
	UNE Loop Rates															
	2-Wire Analog Voice Grade Loop - (SL2) - UNE Zone 1		1	UEPPX	UECD1	16.68										
	2-Wire Analog Voice Grade Loop - (SL2) - UNE Zone 2		2	UEPPX	UECD1	23.13										
	2-Wire Analog Voice Grade Loop - (SL2) - UNE Zone 3		3	UEPPX	UECD1	28.46										
	UNE Port Rate															
	Exchange Ports - 2-Wire DID Port			UEPPX	UEPD1	8.06	225.55	87.21	113.08	14.38						
	NONRECURRING CHARGES - CURRENTLY COMBINED															
	2-Wire Voice Grade Loop / 2-Wire DID Trunk Port Combination - Switch-as-is			UEPPX	USAC1		7.32	1.87								
	2-Wire Voice Grade Loop / 2-Wire DID Trunk Port Conversion with BellSouth Allowable Changes			UEPPX	USA1C		7.32	1.87								
	ADDITIONAL NRCs															
	2-Wire DID Subsequent Activity - Add Trunks, Per Trunk			UEPPX	USAS1		26.84									
	Unbundled Miscellaneous Rate Element, Tag Designed Loop at End User Premise			UEPPX	URETN		11.24	1.10								
	Telephone Number/Trunk Group Establisment Charges															
	DID Trunk Termination (One Per Port)			UEPPX	NDT	0.00	0.00	0.00								
	DID Numbers, Establish Trunk Group and Provide First Group of 20 DID Numbers			UEPPX	NDZ	0.00	0.00	0.00								
	Additional DID Numbers for each Group of 20 DID Numbers			UEPPX	ND4	0.00	0.00	0.00								
	DID Numbers, Non- consecutive DID Numbers , Per Number			UEPPX	ND5	0.00	0.00	0.00								
	Reserve Non-Consecutive DID numbers			UEPPX	ND6	0.00	0.00	0.00								
	Reserve DID Numbers			UEPPX	NDV	0.00	0.00	0.00								
	2-WIRE ISDN DIGITAL GRADE LOOP WITH 2-WIRE ISDN DIGITAL LINE SIDE PORT															
	UNE Port/Loop Combination Rates															
	2W ISDN Digital Grade Loop/2W ISDN Digital Line Side Port - UNE Zone 1					31.86										
	2W ISDN Digital Grade Loop/2W ISDN Digital Line Side Port - UNE Zone 2					39.60										
	2W ISDN Digital Grade Loop/2W ISDN Digital Line Side Port - UNE Zone 3					45.23										
	UNE Loop Rates															
	2-Wire ISDN Digital Grade Loop - UNE Zone 1		1	UEPPB UEPPR	USL2X	21.90										
	2-Wire ISDN Digital Grade Loop - UNE Zone 2		2	UEPPB UEPPR	USL2X	29.64										
	2-Wire ISDN Digital Grade Loop - UNE Zone 3		3	UEPPB UEPPR	USL2X	35.27										
	UNE Port Rate															
	Exchange Port - 2-Wire ISDN Line Side Port			UEPPR	UEPPR	9.96	190.51	133.14	100.95	21.37						
	Exchange Port - 2-Wire ISDN Line Side Port			UEPPB	UEPPB	9.96	190.51	133.14	100.95	21.37						
	NONRECURRING CHARGES - CURRENTLY COMBINED															
	2-Wire ISDN Digital Grade Loop / 2-Wire ISDN Line Side Port Combination - Conversion			UEPPB UEPPR	USACB	0.00	38.59	27.08								
	ADDITIONAL NRCs															
	Unbundled Miscellaneous Rate Element, Tag Designed Loop at End User Premise			UEPPB UEPPR	URETN		11.24	1.10								
	Unbundled Miscellaneous Rate Element, Tag Loop at End User Premise			UEPPB UEPPR	URETL		8.33	0.83								
	B-CHANNEL USER PROFILE ACCESS:															
	CVS/CSD (DMS/5ESS)			UEPPB UEPPR	U1UCA	0.00	0.00	0.00								
	CVS (EWSD)			UEPPB UEPPR	U1UCB	0.00	0.00	0.00								
	CSD			UEPPB UEPPR	U1UCC	0.00	0.00	0.00								

CATEGORY	RATE ELEMENTS	Interim	Zone	BCS	USOC	RATES ($)					Svc Order Submitted Elec per LSR	Svc Order Submitted Manually per LSR	Incremental Charge - Manual Svc Order vs. Electronic-1st	Incremental Charge - Manual Svc Order vs. Electronic-Add'l	Incremental Charge - Manual Svc Order vs. Electronic-Disc 1st	Incremental Charge - Manual Svc Order vs. Electronic-Disc Add'l
						Rec	Nonrecurring		Nonrecurring Disconnect		OSS Rates ($)					
							First	Add'l	First	Add'l	SOMEC	SOMAN	SOMAN	SOMAN	SOMAN	SOMAN
	B-CHANNEL AREA PLUS USER PROFILE ACCESS: (AL,KY,LA,MS SC,MS, & TN)															
	CVS/CSD (DMS/5ESS)			UEPPB UEPPR	U1UCD	0.00	0.00	0.00								
	CVS (EWSD)			UEPPB UEPPR	U1UCE	0.00	0.00	0.00								
	CSD			UEPPB UEPPR	U1UCF	0.00	0.00	0.00								
	USER TERMINAL PROFILE															
	User Terminal Profile (EWSD only)			UEPPB UEPPR	U1UMA	0.00	0.00	0.00								
	VERTICAL FEATURES															
	All Vertical Features - One per Channel B User Profile			UEPPB UEPPR	UEPVF	3.04	0.00	0.00								
	INTEROFFICE CHANNEL MILEAGE															
	Interoffice Channel mileage each, including first mile and facilities termination			UEPPB UEPPR	M1GNC	24.30	40.63	27.47	16.77	6.91						
	Interoffice Channel mileage each, additional mile			UEPPB UEPPR	M1GNM	0.0167	0.00	0.00								
UNBUNDLED CENTREX PORT/LOOP COMBINATIONS - COST BASED RATES																
	UNE-P CENTREX - 5ESS (Valid in All States)															
	2-Wire VG Loop/2-Wire Voice Grade Port (Centrex) Combo															
	UNE Port/Loop Combination Rates (Non-Design)															
	2-Wire VG Loop/2-Wire Voice Grade Port (Centrex) Port Combo - Non-Design					15.89										
	2-Wire VG Loop/2-Wire Voice Grade Port (Centrex)Port Combo - Non-Design					22.52										
	2-Wire VG Loop/2-Wire Voice Grade Port (Centrex)Port Combo - Non-Design					28.17										
	UNE Port/Loop Combination Rates (Design)															
	2-Wire VG Loop/2-Wire Voice Grade Port (Centrex) Port Combo - Design					18.81										
	2-Wire VG Loop/2-Wire Voice Grade Port (Centrex)Port Combo - Design					25.26										
	2-Wire VG Loop/2-Wire Voice Grade Port (Centrex)Port Combo - Design					30.59										
	UNE Loop Rate															
	2-Wire Voice Grade Loop (SL 1) - Zone 1		1	UEP95	UECS1	13.76										
	2-Wire Voice Grade Loop (SL 1) - Zone 2		2	UEP95	UECS1	20.38										
	2-Wire Voice Grade Loop (SL 1) - Zone 3		3	UEP95	UECS1	26.04										
	2-Wire Voice Grade Loop (SL 2) - Zone 1		1	UEP95	UECS2	16.68										
	2-Wire Voice Grade Loop (SL 2) - Zone 2		2	UEP95	UECS2	23.13										
	2-Wire Voice Grade Loop (SL 2) - Zone 3		3	UEP95	UECS2	28.46										
	UNE Port Rate															
	All States															
	2-Wire Voice Grade Port (Centrex) Basic Local Area			UEP95	UEPYA	2.13	40.30	19.90	24.98	6.65						
	2-Wire Voice Grade Port (Centrex 800 termination)			UEP95	UEPYB	2.13	40.30	19.90	24.98	6.65						
	2-Wire Voice Grade Port (Centrex with Caller ID)1Basic Local Area			UEP95	UEPYH	2.13	40.30	19.90	24.98	6.65						
	2-Wire Voice Grade Port (Centrex from diff Serving Wire Center)2,3 Basic Local Area			UEP95	UEPYM	2.13	108.36	70.71	54.47	11.94						
	2-Wire Voice Grade Port, Diff Serving Wire Center 2,3 - 800 Service Term - Basic Local Area			UEP95	UEPYZ	2.13	108.36	70.71	54.47	11.94						
	2-Wire Voice Grade Port terminated in on Megalink or equivalent - Basic Local Area			UEP95	UEPY9	2.13	40.30	19.90	24.98	6.65						
	2-Wire Voice Grade Port Terminated on 800 Service Term - Basic Local Area			UEP95	UEPY2	2.13	40.30	19.90	24.98	6.65						
	AL, KY, LA, MS, SC, & TN Only															
	2-Wire Voice Grade Port (Centrex)			UEP95	UEPQA	2.13	40.30	19.90	24.98	6.65						
	2-Wire Voice Grade Port (Centrex 800 termination)			UEP95	UEPQB	2.13	40.30	19.90	24.98	6.65						
	2-Wire Voice Grade Port (Centrex with Caller ID)1			UEP95	UEPQH	2.13	40.30	19.90	24.98	6.65						
	2-Wire Voice Grade Port (Centrex from diff Serving Wire Center)2,3			UEP95	UEPQM	2.13	108.36	70.71	54.47	11.94						
	2-Wire Voice Grade Port, Diff Serving Wire Center - 800 Service Term 2,3			UEP95	UEPQZ	2.13	108.36	70.71	54.47	11.94						
	2-Wire Voice Grade Port terminated in on Megalink or equivalent			UEP95	UEPQ9	2.13	40.30	19.90	24.98	6.65						
	2-Wire Voice Grade Port Terminated on 800 Service Term			UEP95	UEPQ2	2.13	40.30	19.90	24.98	6.65						
	Local Switching															
	Centrex Intercom Funtionality, per port			UEP95	URECS	0.7996										
	Features															

UNBUNDLED NETWORK ELEMENTS - South Carolina

Attachment: 2 Ex. A

CATEGORY	RATE ELEMENTS	Interim	Zone	BCS	USOC	RATES ($)					Svc Order Submitted Elec per LSR	Svc Order Submitted Manually per LSR	Incremental Charge - Manual Svc Order vs. Electronic-1st	Incremental Charge - Manual Svc Order vs. Electronic-Add'l	Incremental Charge - Manual Svc Order vs. Electronic-Disc 1st	Incremental Charge - Manual Svc Order vs. Electronic-Disc Add'l
						Rec	Nonrecurring		Nonrecurring Disconnect		OSS Rates ($)					
							First	Add'l	First	Add'l	SOMEC	SOMAN	SOMAN	SOMAN	SOMAN	SOMAN
	All Standard Features Offered, per port			UEP95	UEPVF	3.04										
	All Select Features Offered, per port			UEP95	UEPVS	0.00	406.42									
	All Centrex Control Features Offered, per port			UEP95	UEPVC	3.04										
NARS																
	Unbundled Network Access Register - Combination			UEP95	UARCX	0.00	0.00	0.00	0.00	0.00						
	Unbundled Network Access Register - Indial			UEP95	UAR1X	0.00	0.00	0.00	0.00	0.00						
	Unbundled Network Access Register - Outdial			UEP95	UAROX	0.00	0.00	0.00	0.00	0.00						
Miscellaneous Terminations																
2-Wire Trunk Side																
	Trunk Side Terminations, each			UEP95	CEND6	8.86	119.57	18.78	60.03	3.77						
4-Wire Digital (1.544 Megabits)																
	DS1 Circuit Terminations, each			UEP95	M1HD1	73.62	202.47	95.90	72.75	2.47						
	DS0 Channels Activated, each			UEP95	M1HDO	0.00	14.51									
Interoffice Channel Mileage - 2-Wire																
	Interoffice Channel Facilities Termination			UEP95	M1GBC	24.30	40.63	27.47	16.77	6.91						
	Interoffice Channel mileage, per mile or fraction of mile			UEP95	M1GBM	0.0167										
Feature Activations (DS0) Centrex Loops on Channelized DS1 Service																
D4 Channel Bank Feature Activations																
	Feature Activation on D-4 Channel Bank Centrex Loop Slot			UEP95	1PQWS	0.56										
	Feature Activation on D-4 Channel Bank FX line Side Loop Slot			UEP95	1PQW6	0.56										
	Feature Activation on D-4 Channel Bank FX Trunk Side Loop Slot			UEP95	1PQW7	0.56										
	Feature Activation on D-4 Channel Bank Centrex Loop Slot - Different Wire Center			UEP95	1PQWP	0.56										
	Feature Activation on D-4 Channel Bank Private Line Loop Slot			UEP95	1PQWV	0.56										
	Feature Activation on D-4 Channel Bank Tjie Line/Trunk Loop Slot			UEP95	1PQWQ	0.56										
	Feature Activation on D-4 Channel Bank WATS Loop Slot			UEP95	1PQWA	0.56										
Non-Recurring Charges (NRC) Associated with UNE-P Centrex																
	NRC Conversion Currently Combined Switch-As-Is with allowed changes, per port			UEP95	USAC2		37.93	16.72								
	New Centrex Standard Common Block			UEP95	M1ACS	0.00	668.70									
	New Centrex Customized Common Block			UEP95	M1ACC	0.00	668.70									
	NAR Establishment Charge, Per Occasion			UEP95	URECA	0.00	72.89									
Additional Non-Recurring Charges (NRC)																
	Unbundled Miscellaneous Rate Element, Tag Loop at End Use Premise			UEP95	URETL		8.33	0.83								
	Unbundled Miscellaneous Rate Element, Tag Design Loop at End Use Premise			UEP95	URETN		11.24	1.10								
UNE-P CENTREX - DMS100 (Valid in All States)																
2-Wire VG Loop/2-Wire Voice Grade Port (Centrex) Combo																
UNE Port/Loop Combination Rates (Non-Design)																
	2-Wire VG Loop/2-Wire Voice Grade Port (Centrex) Port Combo - Non-Design					15.89										
	2-Wire VG Loop/2-Wire Voice Grade Port (Centrex)Port Combo - Non-Design					22.52										
	2-Wire VG Loop/2-Wire Voice Grade Port (Centrex)Port Combo - Non-Design					28.17										
UNE Port/Loop Combination Rates (Design)																
	2-Wire VG Loop/2-Wire Voice Grade Port (Centrex) Port Combo - Design					18.81										
	2-Wire VG Loop/2-Wire Voice Grade Port (Centrex)Port Combo - Design					25.26										
	2-Wire VG Loop/2-Wire Voice Grade Port (Centrex)Port Combo - Design					30.59										
UNE Loop Rate																
	2-Wire Voice Grade Loop (SL 1) - Zone 1		1	UEP9D	UECS1	13.76										
	2-Wire Voice Grade Loop (SL 1) - Zone 2		2	UEP9D	UECS1	20.38										
	2-Wire Voice Grade Loop (SL 1) - Zone 3		3	UEP9D	UECS1	26.04										
	2-Wire Voice Grade Loop (SL 2) - Zone 1		1	UEP9D	UECS2	16.68										
	2-Wire Voice Grade Loop (SL 2) - Zone 2		2	UEP9D	UECS2	23.13										
	2-Wire Voice Grade Loop (SL 2) - Zone 3		3	UEP9D	UECS2	28.46										

CATEGORY	RATE ELEMENTS	Interim	Zone	BCS	USOC	RATES ($)					Svc Order Submitted Elec per LSR	Svc Order Submitted Manually per LSR	Incremental Charge - Manual Svc Order vs. Electronic-1st	Incremental Charge - Manual Svc Order vs. Electronic-Add'l	Incremental Charge - Manual Svc Order vs. Electronic-Disc 1st	Incremental Charge - Manual Svc Order vs. Electronic-Disc Add'l
						Rec	Nonrecurring		Nonrecurring Disconnect		OSS Rates ($)					
							First	Add'l	First	Add'l	SOMEC	SOMAN	SOMAN	SOMAN	SOMAN	SOMAN
UNE Port Rate																
ALL STATES																
	2-Wire Voice Grade Port (Centrex) Basic Local Area			UEP9D	UEPYA	2.13	40.30	19.90	24.98	6.65						
	2-Wire Voice Grade Port (Centrex 800 termination)Basic Local Area			UEP9D	UEPYB	2.13	40.30	19.90	24.98	6.65						
	2-Wire Voice Grade Port (Centrex / EBS-PSET)3Basic Local Area			UEP9D	UEPYC	2.13	40.30	19.90	24.98	6.65						
	2-Wire Voice Grade Port (Centrex / EBS-M5009)3Basic Local Area			UEP9D	UEPYD	2.13	40.30	19.90	24.98	6.65						
	2-Wire Voice Grade Port (Centrex / EBS-M5209))3 Basic Local Area			UEP9D	UEPYE	2.13	40.30	19.90	24.98	6.65						
	2-Wire Voice Grade Port (Centrex / EBS-M5112))3 Basic Local Area			UEP9D	UEPYF	2.13	40.30	19.90	24.98	6.65						
	2-Wire Voice Grade Port (Centrex / EBS-M5312))3Basic Local Area			UEP9D	UEPYG	2.13	40.30	19.90	24.98	6.65						
	2-Wire Voice Grade Port (Centrex / EBS-M5008))3 Basic Local Area			UEP9D	UEPYT	2.13	40.30	19.90	24.98	6.65						
	2-Wire Voice Grade Port (Centrex / EBS-M5208))3 Basic Local Area			UEP9D	UEPYU	2.13	40.30	19.90	24.98	6.65						
	2-Wire Voice Grade Port (Centrex / EBS-M5216))3 Basic Local Area			UEP9D	UEPYV	2.13	40.30	19.90	24.98	6.65						
	2-Wire Voice Grade Port (Centrex / EBS-M5316))3 Basic Local Area			UEP9D	UEPY3	2.13	40.30	19.90	24.98	6.65						
	2-Wire Voice Grade Port (Centrex with Caller ID) Basic Local Area			UEP9D	UEPYH	2.13	40.30	19.90	24.98	6.65						
	2-Wire Voice Grade Port (Centrex/Caller ID/Msg Wtg Lamp Indication))4 Basic Local Area			UEP9D	UEPYW	2.13	40.30	19.90	24.98	6.65						
	2-Wire Voice Grade Port (Centrex/Msg Wtg Lamp Indication))4 Basic Local Area			UEP9D	UEPYJ	2.13	40.30	19.90	24.98	6.65						
	2-Wire Voice Grade Port (Centrex from diff Serving Wire Center) 2,3-Basic Local Area			UEP9D	UEPYM	2.13	108.36	70.71	54.47	11.94						
	2-Wire Voice Grade Port (Centrex/differ SWC /EBS-PSET)2,3,4 Basic Local Area			UEP9D	UEPYO	2.13	108.36	70.71	54.47	11.94						
	2-Wire Voice Grade Port (Centrex/differ SWC /EBS-M5009)2,3,4 Basic Local Area			UEP9D	UEPYP	2.13	108.36	70.71	54.47	11.94						
	2-Wire Voice Grade Port (Centrex/differ SWC /EBS-5209)2,3,4 Basic Local Area			UEP9D	UEPYQ	2.13	108.36	70.71	54.47	11.94						
	2-Wire Voice Grade Port (Centrex/differ SWC /EBS-M5112)2,3,4 Basic Local Area			UEP9D	UEPYR	2.13	108.36	70.71	54.47	11.94						
	2-Wire Voice Grade Port (Centrex/differ SWC /EBS-M5312)2,3,4 Basic Local Area			UEP9D	UEPYS	2.13	108.36	70.71	54.47	11.94						
	2-Wire Voice Grade Port (Centrex/differ SWC /EBS-M5008)2,3,4 Basic Local Area			UEP9D	UEPY4	2.13	108.36	70.71	54.47	11.94						
	2-Wire Voice Grade Port (Centrex/differ SWC /EBS-M5208)2, 3 Basic Local Area			UEP9D	UEPY5	2.13	108.36	70.71	54.47	11.94						
	2-Wire Voice Grade Port (Centrex/differ SWC /EBS-M5216)2,3,4 Basic Local Area			UEP9D	UEPY6	2.13	108.36	70.71	54.47	11.94						
	2-Wire Voice Grade Port (Centrex/differ SWC /EBS-M5316)2,3,4 Basic Local Area			UEP9D	UEPY7	2.13	108.36	70.71	54.47	11.94						
	2-Wire Voice Grade Port, Diff Serving Wire Center - 800 Service Term 2,3			UEP9D	UEPYZ	2.13	108.36	70.71	54.47	11.94						
	2-Wire Voice Grade Port terminated in on Megalink or equivalent Basic Local Area			UEP9D	UEPY9	2.13	40.30	19.90	24.98	6.65						
	2-Wire Voice Grade Port Terminated on 800 Service Term Basic Local Area			UEP9D	UEPY2	2.13	40.30	19.90	24.98	6.65						
AL, KY, LA, MS, SC, & TN Only																
	2-Wire Voice Grade Port (Centrex)			UEP9D	UEPQA	2.13	40.30	19.90	24.98	6.65						
	2-Wire Voice Grade Port (Centrex 800 termination)			UEP9D	UEPQB	2.13	40.30	19.90	24.98	6.65						
	2-Wire Voice Grade Port (Centrex / EBS-PSET)4			UEP9D	UEPQC	2.13	40.30	19.90	24.98	6.65						
	2-Wire Voice Grade Port (Centrex / EBS-M5009)4			UEP9D	UEPQD	2.13	40.30	19.90	24.98	6.65						
	2-Wire Voice Grade Port (Centrex / EBS-M5209)4			UEP9D	UEPQE	2.13	40.30	19.90	24.98	6.65						
	2-Wire Voice Grade Port (Centrex / EBS-M5112)4			UEP9D	UEPQF	2.13	40.30	19.90	24.98	6.65						
	2-Wire Voice Grade Port (Centrex / EBS-M5312)4			UEP9D	UEPQG	2.13	40.30	19.90	24.98	6.65						
	2-Wire Voice Grade Port (Centrex / EBS-M5008)4			UEP9D	UEPQT	2.13	40.30	19.90	24.98	6.65						

CATEGORY	RATE ELEMENTS	Interim	Zone	BCS	USOC	RATES ($)					Svc Order Submitted Elec per LSR	Svc Order Submitted Manually per LSR	Incremental Charge - Manual Svc Order vs. Electronic-1st	Incremental Charge - Manual Svc Order vs. Electronic-Add'l	Incremental Charge - Manual Svc Order vs. Electronic-Disc 1st	Incremental Charge - Manual Svc Order vs. Electronic-Disc Add'l
						Rec	Nonrecurring		Nonrecurring Disconnect		OSS Rates ($)					
							First	Add'l	First	Add'l	SOMEC	SOMAN	SOMAN	SOMAN	SOMAN	SOMAN
	2-Wire Voice Grade Port (Centrex / EBS-M5208)4			UEP9D	UEPQU	2.13	40.30	19.90	24.98	6.65						
	2-Wire Voice Grade Port (Centrex / EBS-M5216)4			UEP9D	UEPQV	2.13	40.30	19.90	24.98	6.65						
	2-Wire Voice Grade Port (Centrex / EBS-M5316)4			UEP9D	UEPQ3	2.13	40.30	19.90	24.98	6.65						
	2-Wire Voice Grade Port (Centrex with Caller ID)			UEP9D	UEPQH	2.13	40.30	19.90	24.98	6.65						
	2-Wire Voice Grade Port (Centrex/Caller ID/Msg Wtg Lamp Indication)4			UEP9D	UEPQW	2.13	40.30	19.90	24.98	6.65						
	2-Wire Voice Grade Port (Centrex/Msg Wtg Lamp Indication)4			UEP9D	UEPQJ	2.13	40.30	19.90	24.98	6.65						
	2-Wire Voice Grade Port (Centrex from diff Serving Wire Center) 2,3			UEP9D	UEPQM	2.13	108.36	70.71	54.47	11.94						
	2-Wire Voice Grade Port (Centrex/differ SWC /EBS-PSET)2,3,4			UEP9D	UEPQO	2.13	108.36	70.71	54.47	11.94						
	2-Wire Voice Grade Port (Centrex/differ SWC /EBS-M5009)2,3,4			UEP9D	UEPQP	2.13	108.36	70.71	54.47	11.94						
	2-Wire Voice Grade Port (Centrex/differ SWC /EBS-5209)2,3,4			UEP9D	UEPQQ	2.13	108.36	70.71	54.47	11.94						
	2-Wire Voice Grade Port (Centrex/differ SWC /EBS-M5112)2,3,4			UEP9D	UEPQR	2.13	108.36	70.71	54.47	11.94						
	2-Wire Voice Grade Port (Centrex/differ SWC /EBS-M5312)2,3,4			UEP9D	UEPQS	2.13	108.36	70.71	54.47	11.94						
	2-Wire Voice Grade Port (Centrex/differ SWC /EBS-M5008)2,3,4			UEP9D	UEPQ4	2.13	108.36	70.71	54.47	11.94						
	2-Wire Voice Grade Port (Centrex/differ SWC /EBS-M5208)2,3,4			UEP9D	UEPQ5	2.13	108.36	70.71	54.47	11.94						
	2-Wire Voice Grade Port (Centrex/differ SWC /EBS-M5216)2,3,4			UEP9D	UEPQ6	2.13	108.36	70.71	54.47	11.94						
	2-Wire Voice Grade Port (Centrex/differ SWC /EBS-M5316)2,3,4			UEP9D	UEPQ7	2.13	108.36	70.71	54.47	11.94						
	2-Wire Voice Grade Port, Diff Serving Wire Center - 800 Service Term 2,3			UEP9D	UEPQZ	2.13	108.36	70.71	54.47	11.94						
	2-Wire Voice Grade Port terminated in on Megalink or equivalent			UEP9D	UEPQ9	2.13	40.30	19.90	24.98	6.65						
	2-Wire Voice Grade Port Terminated on 800 Service Term			UEP9D	UEPQ2	2.13	40.30	19.90	24.98	6.65						
Local Switching																
	Centrex Intercom Funtionality, per port			UEP9D	URECS	0.7996										
Features																
	All Standard Features Offered, per port			UEP9D	UEPVF	3.04										
	All Select Features Offered, per port			UEP9D	UEPVS	0.00	406.42									
	All Centrex Control Features Offered, per port			UEP9D	UEPVC	3.04										
NARS																
	Unbundled Network Access Register - Combination			UEP9D	UARCX	0.00	0.00	0.00	0.00	0.00						
	Unbundled Network Access Register - Inward			UEP9D	UAR1X	0.00	0.00	0.00	0.00	0.00						
	Unbundled Network Access Register - Outdial			UEP9D	UAROX	0.00	0.00	0.00	0.00	0.00						
Miscellaneous Terminations																
2-Wire Trunk Side																
	Trunk Side Terminations, each			UEP9D	CEND6	8.86	119.57	18.78	60.03	3.77						
4-Wire Digital (1.544 Megabits)																
	DS1 Circuit Terminations, each			UEP9D	M1HD1	73.62	202.47	95.90	72.75	2.47						
	DS0 Channels Activiated per Channel			UEP9D	M1HDO	0.00	14.51									
Interoffice Channel Mileage - 2-Wire																
	Interoffice Channel Facilities Termination			UEP9D	M1GBC	24.30	40.63	27.47	16.77	6.91						
	Interoffice Channel mileage, per mile or fraction of mile			UEP9D	M1GBM	0.0167										
Feature Activations (DS0) Centrex Loops on Channelized DS1 Service																
D4 Channel Bank Feature Activations																
	Feature Activation on D-4 Channel Bank Centrex Loop Slot			UEP9D	1PQWS	0.56										
	Feature Activation on D-4 Channel Bank FX line Side Loop Slot			UEP9D	1PQW6	0.56										
	Feature Activation on D-4 Channel Bank FX Trunk Side Loop Slot			UEP9D	1PQW7	0.56										
	Feature Activation on D-4 Channel Bank Centrex Loop Slot - Different Wire Center			UEP9D	1PQWP	0.56										
	Feature Activation on D-4 Channel Bank Private Line Loop Slot			UEP9D	1PQWV	0.56										
	Feature Activation on D-4 Channel Bank Tjie Line/Trunk Loop Slot			UEP9D	1PQWQ	0.56										

UNBUNDLED NETWORK ELEMENTS - South Carolina														Attachment: 2 Ex. A				
CATEGORY		RATE ELEMENTS	Interim	Zone	BCS	USOC	RATES ($)					Svc Order Submitted Elec per LSR	Svc Order Submitted Manually per LSR	Incremental Charge - Manual Svc Order vs. Electronic-1st	Incremental Charge - Manual Svc Order vs. Electronic-Add'l	Incremental Charge - Manual Svc Order vs. Electronic-Disc 1st	Incremental Charge - Manual Svc Order vs. Electronic-Disc Add'l	
							Rec	Nonrecurring		Nonrecurring Disconnect		OSS Rates ($)						
								First	Add'l	First	Add'l	SOMEC	SOMAN	SOMAN	SOMAN	SOMAN	SOMAN	
		Feature Activation on D-4 Channel Bank WATS Loop Slot			UEP9D	1PQWA	0.56											
	Non-Recurring Charges (NRC) Associated with UNE-P Centrex																	
		NRC Conversion Currently Combined Switch-As-Is with allowed changes, per port			UEP9D	USAC2		37.93	16.72									
		New Centrex Standard Common Block			UEP9D	M1ACS	0.00	668.70										
		New Centrex Customized Common Block			UEP9D	M1ACC	0.00	668.70										
		NAR Establishment Charge, Per Occasion			UEP9D	URECA	0.00	72.89										
	Additional Non-Recurring Charges (NRC)																	
		Unbundled Miscellaneous Rate Element, Tag Loop at End Use Premise			UEP9D	URETL		8.33	0.83									
		Unbundled Miscellaneous Rate Element, Tag Design Loop at End Use Premise			UEP9D	URETN		11.24	1.10									
	Note 1 - Required Port for Centrex Control in 1AESS, 5ESS & EWSD																	
	Note 2 - Requres Interoffice Channel Mileage																	
	Note 3 - Installation is combination of Installation charge for SL2 Loop and Port																	
	Note 4 - Requires Specific Customer Premises Equipment																	
	Note: Rates displaying an "I" in Interim column are interim as a result of a Commission order.																	

UNBUNDLED NETWORK ELEMENTS - Tennessee

Attachment: 2 Ex. A

CATEGORY	RATE ELEMENTS	Interim	Zone	BCS	USOC	RATES ($)					Svc Order Submitted Elec per LSR	Svc Order Submitted Manually per LSR	Incremental Charge - Manual Svc Order vs. Electronic-1st	Incremental Charge - Manual Svc Order vs. Electronic-Add'l	Incremental Charge - Manual Svc Order vs. Electronic-Disc 1st	Incremental Charge - Manual Svc Order vs. Electronic-Disc Add'l
						Rec	Nonrecurring		Nonrecurring Disconnect		OSS Rates ($)					
							First	Add'l	First	Add'l	SOMEC	SOMAN	SOMAN	SOMAN	SOMAN	SOMAN
	The "Zone" shown in the sections for stand-alone loops or loops as part of a combination refers to Geographically Deaveraged UNE Zones. To view Geographically Deaveraged UNE Zone Designations by Central Office, refer to internet Website: http://www.interconnection.bellsouth.com/become_a_clec/html/interconnection.htm															
OPERATIONAL SUPPORT SYSTEMS (OSS) - "REGIONAL RATES"																
	NOTE: (1) CLEC should contact its contract negotiator if it prefers the "state specific" OSS charges as ordered by the State Commissions. The OSS charges currently contained in this rate exhibit are the BellSouth "regional" service ordering charges. CLEC may elect either the state specific Commission ordered rates for the service ordering charges, or CLEC may elect the regional service ordering charge, however, CLEC can not obtain a mixture of the two regardless if CLEC has a interconnection contract established in each of the 9 states.															
	NOTE: (2) Any element that can be ordered electronically will be billed according to the SOMEC rate listed in this category. Please refer to BellSouth's Local Ordering Handbook (LOH) to determine if a product can be ordered electronically. For those elements that cannot be ordered electronically at present per the LOH, the listed SOMEC rate in this category reflects the charge that would be billed to a CLEC once electronic ordering capabilities come on-line for that element. Otherwise, the manual ordering charge, SOMAN, will be applied to a CLECs bill when it submits an LSR to BellSouth.															
	NOTE: (3) OSS - Manual Service Order Charge, Per Element - UNE Only **Please see applicable rate element for SOMAN charge**															
	OSS - Electronic Service Order Charge, Per Local Service Request (LSR) - UNE Only				SOMEC		3.50	0.00	3.50	0.00						
UNE SERVICE DATE ADVANCEMENT CHARGE																
	NOTE: The Expedite charge will be maintained commensurate with BellSouth's FCC No.1 Tariff, Section 5 as applicable.															
	UNE Expedite Charge per Circuit or Line Assignable USOC, per Day			UAL, UEANL, UCL, UEF, UDF, UEQ, UDL, UENTW, UDN, UEA, UHL, ULC, USL, U1T12, U1T48, U1TD1, U1TD3, U1TDX, U1TO3, U1TS1, U1TVX, UC1BC, UC1BL, UC1CC, UC1CL, UC1DC, UC1DL, UC1EC, UC1EL, UC1FC, UC1FL, UC1GC, UC1GL, UC1HC, UC1HL, UDL12, UDL48, UDLO3, UDLSX, UE3, ULD12, ULD48, ULDD1, ULDD3, ULDDX, ULDO3, ULDS1, ULDVX, UNC1X, UNC3X, UNCDX, UNCNX, UNCSX, UNCVX, UNLD1, UNLD3, UXTD1, UXTD3, UXTS1, U1TUC, U1TUD, U1TUB, U1TUA	SDASP		200.00									
ORDER MODIFICATION CHARGE																
	Order Modification Charge (OMC)						26.21	0.00	0.00	0.00						
	Order Modification Additional Dispatch Charge (OMCAD)						150.00	0.00	0.00	0.00						
UNBUNDLED EXCHANGE ACCESS LOOP																
	2-WIRE ANALOG VOICE GRADE LOOP															
	2-Wire Analog Voice Grade Loop - Service Level 1- Zone 1		1	UEANL	UEAL2	13.19	31.99	20.02	10.65	1.41			20.35	10.54	13.32	13.32
	2-Wire Analog Voice Grade Loop - Service Level 1- Zone 2		2	UEANL	UEAL2	17.23	31.99	20.02	10.65	1.41			20.35	10.54	13.32	13.32
	2-Wire Analog Voice Grade Loop - Service Level 1- Zone 3		3	UEANL	UEAL2	22.53	31.99	20.02	10.65	1.41			20.35	10.54	13.32	13.32
	2-Wire Analog Voice Grade Loop - Service Level 1- Zone 1		1	UEANL	UEASL	13.19	31.99	20.02	10.65	1.41			20.35	10.54	13.32	13.32
	2-Wire Analog Voice Grade Loop - Service Level 1- Zone 2		2	UEANL	UEASL	17.23	31.99	20.02	10.65	1.41			20.35	10.54	13.32	13.32
	2-Wire Analog Voice Grade Loop - Service Level 1- Zone 3		3	UEANL	UEASL	22.53	31.99	20.02	10.65	1.41			20.35	10.54	13.32	13.32
	Unbundled Miscellaneous Rate Element, Tag Loop at End User Premise			UEANL	URETL		8.33	0.83					20.35	10.54	13.32	13.32
	Loop Testing - Basic 1st Half Hour			UEANL	URET1		78.92	78.92					20.35	10.54	13.32	13.32
	Loop Testing - Basic Additional Half Hour			UEANL	URETA		23.33	23.33					20.35	10.54	13.32	13.32
	CLEC to CLEC Conversion Charge Without Outside Dispatch (UVL-SL1)			UEANL	UREWO		15.80	8.95					20.35	10.54	13.32	13.32
	Unbundled Voice Loop, Non-Design Voice Loop, billing for BST providing make-up (Engineering Information - E.I.)			UEANL	UEANM		28.80	28.80								

CATEGORY	RATE ELEMENTS	Interim	Zone	BCS	USOC	RATES ($) Rec	Nonrecurring First	Nonrecurring Add'l	Nonrecurring Disconnect First	Nonrecurring Disconnect Add'l	Svc Order Submitted Elec per LSR	Svc Order Submitted Manually per LSR	Incremental Charge - Manual Svc Order vs. Electronic-1st	Incremental Charge - Manual Svc Order vs. Electronic-Add'l	Incremental Charge - Manual Svc Order vs. Electronic-Disc 1st	Incremental Charge - Manual Svc Order vs. Electronic-Disc Add'l
											OSS Rates ($)					
											SOMEC	SOMAN	SOMAN	SOMAN	SOMAN	SOMAN
	Manual Order Coordination for UVL-SL1s (per loop)			UEANL	UEAMC		36.52	36.52								
	Order Coordination for Specified Conversion Time for UVL-SL1 (per LSR)			UEANL	OCOSL		34.29	34.29								
2-WIRE Unbundled COPPER LOOP																
	2-Wire Unbundled Copper Loop - Non-Designed Zone 1		1	UEQ	UEQ2X	13.19	31.99	20.02	10.65	1.41			20.35	10.54	13.32	13.32
	2 Wire Unbundled Copper Loop - Non-Designed - Zone 2		2	UEQ	UEQ2X	17.23	31.99	20.02	10.65	1.41			20.35	10.54	13.32	13.32
	2 Wire Unbundled Copper Loop - Non-Designed - Zone 3		3	UEQ	UEQ2X	22.53	31.99	20.02	10.65	1.41			20.35	10.54	13.32	13.32
	Unbundled Miscellaneous Rate Element, Tag Loop at End User Premise			UEQ	URETL		8.33	0.83					20.35	10.54	13.32	13.32
	Manual Order Coordination 2 Wire Unbundled Copper Loop - Non-Designed (per loop)			UEQ	USBMC		36.52	36.52								
	Unbundled Copper Loop, Non-Design Copper Loop, billing for BST providing make-up (Engineering Information - E.I.)			UEQ	UEQMU		28.80	28.80					20.35	10.54	13.32	13.32
	Loop Testing - Basic 1st Half Hour			UEQ	URET1		78.92	78.92					20.35	10.54	13.32	13.32
	Loop Testing - Basic Additional Half Hour			UEQ	URETA		23.33	23.33					20.35	10.54	13.32	13.32
	CLEC to CLEC Conversion Charge Without Outside Dispatch (UCL-ND)			UEQ	UREWO		14.29	7.44					20.35	10.54	13.32	13.32
UNBUNDLED EXCHANGE ACCESS LOOP																
2-WIRE ANALOG VOICE GRADE LOOP																
	2 Wire Analog Voice Grade Loop-Service Level 1-Line Splitting-Zone 1		1	UEPSR UEPSB	UEALS	13.19	31.99	20.02	10.65	1.41			20.35	10.54	13.32	13.32
	2 Wire Analog Voice Grade Loop-Service Level 1-Line Splitting-Zone 1		1	UEPSR UEPSB	UEABS	13.19	31.99	20.02	10.65	1.41			20.35	10.54	13.32	13.32
	2 Wire Analog Voice Grade Loop- Service Level 1-Line Splitting-Zone 2		2	UEPSR UEPSB	UEALS	17.23	31.99	20.02	10.65	1.41			20.35	10.54	13.32	13.32
	2 Wire Analog Voice Grade Loop- Service Level 1-Line Splitting-Zone 2		2	UEPSR UEPSB	UEABS	17.23	31.99	20.02	10.65	1.41			20.35	10.54	13.32	13.32
	2 Wire Analog Voice Grade Loop-Service Level 1-Line Splitting-Zone 3		3	UEPSR UEPSB	UEALS	22.53	31.99	20.02	10.65	1.41			20.35	10.54	13.32	13.32
	2 Wire Analog Voice Grade Loop-Service Level 1-Line Splitting-Zone 3		3	UEPSR UEPSB	UEABS	22.53	31.99	20.02	10.65	1.41			20.35	10.54	13.32	13.32
UNBUNDLED EXCHANGE ACCESS LOOP																
2-WIRE ANALOG VOICE GRADE LOOP																
	2-Wire Analog Voice Grade Loop - Service Level 2 w/Loop or Ground Start Signaling - Zone 1		1	UEA	UEAL2	16.56	75.06	48.20	28.70	17.64			20.35	10.54	13.32	13.32
	2-Wire Analog Voice Grade Loop - Service Level 2 w/Loop or Ground Start Signaling - Zone 2		2	UEA	UEAL2	21.63	75.06	48.20	28.70	17.64			20.35	10.54	13.32	13.32
	2-Wire Analog Voice Grade Loop - Service Level 2 w/Loop or Ground Start Signaling - Zone 3		3	UEA	UEAL2	28.28	75.06	48.20	28.70	17.64			20.35	10.54	13.32	13.32
	Order Coordination for Specified Conversion Time (per LSR)			UEA	OCOSL		34.29									
	2-Wire Analog Voice Grade Loop - Service Level 2 w/Reverse Battery Signaling - Zone 1		1	UEA	UEAR2	16.56	75.06	48.20	28.70	17.64			20.35	10.54	13.32	13.32
	2-Wire Analog Voice Grade Loop - Service Level 2 w/Reverse Battery Signaling - Zone 2		2	UEA	UEAR2	21.63	75.06	48.20	28.70	17.64			20.35	10.54	13.32	13.32
	2-Wire Analog Voice Grade Loop - Service Level 2 w/Reverse Battery Signaling - Zone 3		3	UEA	UEAR2	28.28	75.06	48.20	28.70	17.64			20.35	10.54	13.32	13.32
	Order Coordination for Specified Conversion Time (per LSR)			UEA	OCOSL		34.29									
	CLEC to CLEC Conversion Charge without outside dispatch			UEA	UREWO		75.06	36.41					20.35	10.54	13.32	13.32
	Loop Tagging - Service Level 2 (SL2)			UEA	URETL		11.23	1.10					20.35	10.54	13.32	13.32
4-WIRE ANALOG VOICE GRADE LOOP																
	4-Wire Analog Voice Grade Loop - Zone 1		1	UEA	UEAL4	24.70	122.76	85.57	76.35	39.16			20.35	10.54	13.32	13.32
	4-Wire Analog Voice Grade Loop - Zone 2		2	UEA	UEAL4	32.25	122.76	85.57	76.35	39.16			20.35	10.54	13.32	13.32
	4-Wire Analog Voice Grade Loop - Zone 3		3	UEA	UEAL4	42.17	122.76	85.57	76.35	39.16			20.35	10.54	13.32	13.32
	Order Coordination for Specified Conversion Time (per LSR)			UEA	OCOSL		34.29									
	CLEC to CLEC Conversion Charge without outside dispatch			UEA	UREWO		75.06	36.41					20.35	10.54	13.32	13.32
2-WIRE ISDN DIGITAL GRADE LOOP																
	2-Wire ISDN Digital Grade Loop - Zone 1		1	UDN	U1L2X	22.22	142.76	88.88	76.35	39.16			20.35	10.54	13.32	13.32
	2-Wire ISDN Digital Grade Loop - Zone 2		2	UDN	U1L2X	29.02	142.76	88.88	76.35	39.16			20.35	10.54	13.32	13.32
	2-Wire ISDN Digital Grade Loop - Zone 3		3	UDN	U1L2X	37.95	142.76	88.88	76.35	39.16			20.35	10.54	13.32	13.32
	Order Coordination For Specified Conversion Time (per LSR)			UDN	OCOSL		34.29									
	CLEC to CLEC Conversion Charge without outside dispatch			UDN	UREWO		91.77	44.22					20.35	10.54	13.32	13.32
2-WIRE ASYMMETRICAL DIGITAL SUBSCRIBER LINE (ADSL) COMPATIBLE LOOP																
	2 Wire Unbundled ADSL Loop including manual service inquiry & facility reservation - Zone 1		1	UAL	UAL2X	13.82	270.01	234.63	74.54	39.14			20.35	10.54	13.32	13.32

UNBUNDLED NETWORK ELEMENTS - Tennessee

Attachment: 2 Ex. A

CATEGORY	RATE ELEMENTS	Interim	Zone	BCS	USOC	RATES ($) Rec	Nonrecurring First	Nonrecurring Add'l	Nonrecurring Disconnect First	Nonrecurring Disconnect Add'l	Svc Order Submitted Elec per LSR	Svc Order Submitted Manually per LSR	Incremental Charge - Manual Svc Order vs. Electronic-1st	Incremental Charge - Manual Svc Order vs. Electronic-Add'l	Incremental Charge - Manual Svc Order vs. Electronic-Disc 1st	Incremental Charge - Manual Svc Order vs. Electronic-Disc Add'l
											OSS Rates ($)					
							First	Add'l	First	Add'l	SOMEC	SOMAN	SOMAN	SOMAN	SOMAN	SOMAN
	2 Wire Unbundled ADSL Loop including manual service inquiry & facility reservation - Zone 2		2	UAL	UAL2X	18.05	270.01	234.63	74.54	39.14			20.35	10.54	13.32	13.32
	2 Wire Unbundled ADSL Loop including manual service inquiry & facility reservation - Zone 3		3	UAL	UAL2X	23.60	270.01	234.63	74.54	39.14			20.35	10.54	13.32	13.32
	Order Coordination for Specified Conversion Time (per LSR)			UAL	OCOSL		34.29									
	2 Wire Unbundled ADSL Loop without manual service inquiry & facility reservaton - Zone 1	I	1	UAL	UAL2W	13.82	31.99	20.02	10.65	1.41			20.35	10.54	13.32	13.32
	2 Wire Unbundled ADSL Loop without manual service inquiry & facility reservaton - Zone 2	I	2	UAL	UAL2W	18.05	31.99	20.02	10.65	1.41			20.35	10.54	13.32	13.32
	2 Wire Unbundled ADSL Loop without manual service inquiry & facility reservaton - Zone 3	I	3	UAL	UAL2W	23.60	31.99	20.02	10.65	1.41			20.35	10.54	13.32	13.32
	Order Coordination for Specified Conversion Time (per LSR)			UAL	OCOSL		34.29									
	CLEC to CLEC Conversion Charge without outside dispatch	I		UAL	UREWO		31.99	20.02					20.35	10.54	13.32	13.32
2-WIRE HIGH BIT RATE DIGITAL SUBSCRIBER LINE (HDSL) COMPATIBLE LOOP																
	2 Wire Unbundled HDSL Loop including manual service inquiry & facility reservation - Zone 1		1	UHL	UHL2X	10.83	270.01	234.63	74.54	39.14			20.35	10.54	13.32	13.32
	2 Wire Unbundled HDSL Loop including manual service inquiry & facility reservation - Zone 2		2	UHL	UHL2X	14.15	270.01	234.63	74.54	39.14			20.35	10.54	13.32	13.32
	2 Wire Unbundled HDSL Loop including manual service inquiry & facility reservation - Zone 3		3	UHL	UHL2X	18.50	270.01	234.63	74.54	39.14			20.35	10.54	13.32	13.32
	Order Coordination for Specified Conversion Time (per LSR)			UHL	OCOSL		34.29									
	2 Wire Unbundled HDSL Loop without manual service inquiry and facility reservation - Zone 1	I	1	UHL	UHL2W	10.83	31.99	20.02	10.65	1.41			20.35	10.54	13.32	13.32
	2 Wire Unbundled HDSL Loop without manual service inquiry and facility reservation - Zone 2	I	2	UHL	UHL2W	14.15	31.99	20.02	10.65	1.41			20.35	10.54	13.32	13.32
	2 Wire Unbundled HDSL Loop without manual service inquiry and facility reservation - Zone 3	I	3	UHL	UHL2W	18.50	31.99	20.02	10.65	1.41			20.35	10.54	13.32	13.32
	Order Coordination for Specified Conversion Time (per LSR)			UHL	OCOSL		34.29									
	CLEC to CLEC Conversion Charge without outside dispatch	I		UHL	UREWO		31.99	20.02					20.35	10.54	13.32	13.32
4-WIRE HIGH BIT RATE DIGITAL SUBSCRIBER LINE (HDSL) COMPATIBLE LOOP																
	4 Wire Unbundled HDSL Loop including manual service inquiry and facility reservation - Zone 1		1	UHL	UHL4X	13.93	279.60	244.22	74.54	39.14			20.35	10.54	13.32	13.32
	4-Wire Unbundled HDSL Loop including manual service inquiry and facility reservation - Zone 2		2	UHL	UHL4X	18.20	279.60	244.22	74.54	39.14			20.35	10.54	13.32	13.32
	4-Wire Unbundled HDSL Loop including manual service inquiry and facility reservation - Zone 3		3	UHL	UHL4X	23.80	279.60	244.22	74.54	39.14			20.35	10.54	13.32	13.32
	Order Coordination for Specified Conversion Time (per LSR)			UHL	OCOSL		34.29									
	4-Wire Unbundled HDSL Loop without manual service inquiry and facility reservation - Zone 1	I	1	UHL	UHL4W	13.93	31.99	20.02	10.65	1.41			20.35	10.54	13.32	13.32
	4-Wire Unbundled HDSL Loop without manual service inquiry and facility reservation - Zone 2	I	2	UHL	UHL4W	18.20	31.99	20.02	10.65	1.41			20.35	10.54	13.32	13.32
	4-Wire Unbundled HDSL Loop without manual service inquiry and facility reservation - Zone 3	I	3	UHL	UHL4W	23.80	31.99	20.02	10.65	1.41			20.35	10.54	13.32	13.32
	Order Coordination for Specified Conversion Time (per LSR)			UHL	OCOSL		34.29									
	CLEC to CLEC Conversion Charge without outside dispatch	I		UHL	UREWO		31.99	20.02					20.35	10.54	13.32	13.32
4-WIRE DS1 DIGITAL LOOP																
	4-Wire DS1 Digital Loop - Zone 1		1	USL	USLXX	57.73	313.08	219.72	96.86	40.45			18.98	8.43	11.95	11.95
	4-Wire DS1 Digital Loop - Zone 2		2	USL	USLXX	75.40	313.08	219.72	96.86	40.45			18.98	8.43	11.95	11.95
	4-Wire DS1 Digital Loop - Zone 3		3	USL	USLXX	98.59	313.08	219.72	96.86	40.45			18.98	8.43	11.95	11.95
	Order Coordination for Specified Conversion Time (per LSR)			USL	OCOSL		34.59									
	CLEC to CLEC Conversion Charge without outside dispatch			USL	UREWO		130.47	40.11					20.35	10.54	13.32	13.32
4-WIRE 19.2, 56 OR 64 KBPS DIGITAL GRADE LOOP																
	4 Wire Unbundled Digital 19.2 Kbps		1	UDL	UDL19	31.10	207.01	141.38	90.70	44.18			20.35	10.54	13.32	13.32
	4 Wire Unbundled Digital 19.2 Kbps		2	UDL	UDL19	40.61	207.01	141.38	90.70	44.18			20.35	10.54	13.32	13.32
	4 Wire Unbundled Digital 19.2 Kbps		3	UDL	UDL19	53.11	207.01	141.38	90.70	44.18			20.35	10.54	13.32	13.32
	4 Wire Unbundled Digital Loop 56 Kbps - Zone 1		1	UDL	UDL56	31.10	207.01	141.38	90.70	44.18			20.35	10.54	13.32	13.32
	4 Wire Unbundled Digital Loop 56 Kbps - Zone 2		2	UDL	UDL56	40.61	207.01	141.38	90.70	44.18			20.35	10.54	13.32	13.32
	4 Wire Unbundled Digital Loop 56 Kbps - Zone 3		3	UDL	UDL56	53.11	207.01	141.38	90.70	44.18			20.35	10.54	13.32	13.32
	Order Coordination for Specified Conversion Time (per LSR)			UDL	OCOSL		34.29									
	4 Wire Unbundled Digital Loop 64 Kbps - Zone 1		1	UDL	UDL64	31.10	207.01	141.38	90.70	44.18			20.35	10.54	13.32	13.32
	4 Wire Unbundled Digital Loop 64 Kbps - Zone 2		2	UDL	UDL64	40.61	207.01	141.38	90.70	44.18			20.35	10.54	13.32	13.32
	4 Wire Unbundled Digital Loop 64 Kbps - Zone 3		3	UDL	UDL64	53.11	207.01	141.38	90.70	44.18			20.35	10.54	13.32	13.32
	Order Coordination for Specified Conversion Time (per LSR)			UDL	OCOSL		34.29									
	CLEC to CLEC Conversion Charge without outside dispatch			UDL	UREWO		102.28	49.82					20.35	10.54	13.32	13.32

UNBUNDLED NETWORK ELEMENTS - Tennessee

Attachment: 2 Ex. A

CATEGORY	RATE ELEMENTS	Interim	Zone	BCS	USOC	RATES ($)					Svc Order Submitted Elec per LSR	Svc Order Submitted Manually per LSR	Incremental Charge - Manual Svc Order vs. Electronic-1st	Incremental Charge - Manual Svc Order vs. Electronic-Add'l	Incremental Charge - Manual Svc Order vs. Electronic-Disc 1st	Incremental Charge - Manual Svc Order vs. Electronic-Disc Add'l
						Rec	Nonrecurring		Nonrecurring Disconnect		OSS Rates ($)					
							First	Add'l	First	Add'l	SOMEC	SOMAN	SOMAN	SOMAN	SOMAN	SOMAN
2-WIRE Unbundled COPPER LOOP																
	2-Wire Unbundled Copper Loop-Designed including manual service inquiry & facility reservation - Zone 1	I	1	UCL	UCLPB	13.19	31.99	20.02	10.65	1.41			20.35	10.54	13.32	13.32
	2-Wire Unbundled Copper Loop-Designed including manual service inquiry & facility reservation - Zone 2	I	2	UCL	UCLPB	17.23	31.99	20.02	10.65	1.41			20.35	10.54	13.32	13.32
	2 Wire Unbundled Copper Loop-Designed including manual service inquiry & facility reservation - Zone 3	I	3	UCL	UCLPB	22.53	31.99	20.02	10.65	1.41			20.35	10.54	13.32	13.32
	Order Coordination for Unbundled Copper Loops (per loop)			UCL	UCLMC		36.52	36.52								
	2-Wire Unbundled Copper Loop-Designed without manual service inquiry and facility reservation - Zone 1	I	1	UCL	UCLPW	13.19	31.99	20.02	10.65	1.41			20.35	10.54	13.32	13.32
	2-Wire Unbundled Copper Loop-Designed without manual service inquiry and facility reservation - Zone 2	I	2	UCL	UCLPW	17.23	31.99	20.02	10.65	1.41			20.35	10.54	13.32	13.32
	2-Wire Unbundled Copper Loop-Designed without manual service inquiry and facility reservation - Zone 3	I	3	UCL	UCLPW	22.53	31.99	20.02	10.65	1.41			20.35	10.54	13.32	13.32
	Order Coordination for Unbundled Copper Loops (per loop)			UCL	UCLMC		36.52	36.52								
	CLEC to CLEC Conversion Charge without outside dispatch (UCL-Des)	I		UCL	UREWO		31.99	20.02					20.35	10.54	13.32	13.32
4-WIRE COPPER LOOP																
	4-Wire Copper Loop-Designed including manual service inquiry and facility reservation - Zone 1	I	1	UCL	UCL4S	24.70	122.76	85.57	76.35	39.16			20.35	10.54	13.32	13.32
	4-Wire Copper Loop-Designed including manual service inquiry and facility reservation - Zone 2	I	2	UCL	UCL4S	32.25	122.76	85.57	76.35	39.16			20.35	10.54	13.32	13.32
	4-Wire Copper Loop-Designed including manual service inquiry and facility reservation - Zone 3	I	3	UCL	UCL4S	42.17	122.76	85.57	76.35	39.16			20.35	10.54	13.32	13.32
	Order Coordination for Unbundled Copper Loops (per loop)			UCL	UCLMC		36.52	36.52								
	4-Wire Copper Loop-Designed without manual service inquiry and facility reservation - Zone 1	I	1	UCL	UCL4W	24.70	122.76	85.57	76.35	39.16			20.35	10.54	13.32	13.32
	4-Wire Copper Loop-Designed without manual service inquiry and facility reservation - Zone 2	I	2	UCL	UCL4W	32.25	122.76	85.57	76.35	39.16			20.35	10.54	13.32	13.32
	4-Wire Copper Loop-Designed without manual service inquiry and facility reservation - Zone 3	I	3	UCL	UCL4W	42.17	122.76	85.57	76.35	39.16			20.35	10.54	13.32	13.32
	Order Coordination for Unbundled Copper Loops (per loop)			UCL	UCLMC		36.52	36.52								
	CLEC to CLEC Conversion Charge without outside dispatch (UCL-Des)	I		UCL	UREWO		31.99	20.02					20.35	10.54	13.32	13.32
LOOP MODIFICATION																
	Unbundled Loop Modification, Removal of Load Coils - 2 Wire pair less than or equal to 18k ft, per Unbundled Loop			UAL, UHL, UCL, UEQ, ULS, UEA, UEANL, UEPSR, UEPSB	ULM2L		65.40	65.40					20.35	10.54	13.32	13.32
	Unbundled Loop Modification Removal of Load Coils - 4 Wire less than or equal to 18K ft, per Unbundled Loop			UHL, UCL, UEA	ULM4L		65.40	65.40					20.35	10.54	13.32	13.32
	Unbundled Loop Modification Removal of Bridged Tap Removal, per unbundled loop	I		UAL, UHL, UCL, UEQ, ULS, UEA, UEANL, UEPSR, UEPSB	ULMBT		65.44	65.44					20.35	10.54	13.32	13.32
SUB-LOOPS																
Sub-Loop Distribution																
	Sub-Loop - Per Cross Box Location - CLEC Feeder Facility Set-Up	I		UEANL	USBSA		517.25	517.25					20.35	10.54	13.32	13.32
	Sub-Loop - Per Cross Box Location - Per 25 Pair Panel Set-Up	I		UEANL	USBSB		42.68	42.68					20.35	10.54	13.32	13.32
	Sub-Loop - Per Building Equipment Room - CLEC Feeder Facility Set-Up	I		UEANL	USBSC		313.01	313.01					20.35	10.54	13.32	13.32
	Sub-Loop - Per Building Equipment Room - Per 25 Pair Panel Set-Up	I		UEANL	USBSD		108.06	108.06					20.35	10.54	13.32	13.32
	Sub-Loop Distribution Per 2-Wire Analog Voice Grade Loop - Statewide		sw	UEANL	USBN2	10.02	148.84	112.34	73.14	36.65			20.35	10.54	13.32	13.32
	Order Coordination for Unbundled Sub-Loops, per sub-loop pair			UEANL	USBMC		34.29	34.29								
	Sub-Loop Distribution Per 4-Wire Analog Voice Grade Loop - Zone 1		1	UEANL	USBN4	7.30	147.93	75.11	99.96	16.98			20.35	10.54	13.32	13.32
	Sub-Loop Distribution Per 4-Wire Analog Voice Grade Loop - Zone 2		2	UEANL	USBN4	9.54	147.93	75.11	99.96	16.98			20.35	10.54	13.32	13.32

UNBUNDLED NETWORK ELEMENTS - Tennessee

Attachment: 2 Ex. A

CATEGORY	RATE ELEMENTS	Interim	Zone	BCS	USOC	RATES ($) Rec	Nonrecurring First	Nonrecurring Add'l	Nonrecurring Disconnect First	Nonrecurring Disconnect Add'l	Svc Order Submitted Elec per LSR	Svc Order Submitted Manually per LSR	Incremental Charge - Manual Svc Order vs. Electronic-1st	Incremental Charge - Manual Svc Order vs. Electronic-Add'l	Incremental Charge - Manual Svc Order vs. Electronic-Disc 1st	Incremental Charge - Manual Svc Order vs. Electronic-Disc Add'l
											OSS Rates ($)					
							First	Add'l	First	Add'l	SOMEC	SOMAN	SOMAN	SOMAN	SOMAN	SOMAN
	Sub-Loop Distribution Per 4-Wire Analog Voice Grade Loop - Zone 3		3	UEANL	USBN4	12.47	147.93	75.11	99.96	16.98			20.35	10.54	13.32	13.32
	Order Coordination for Unbundled Sub-Loops, per sub-loop pair			UEANL	USBMC		34.29	34.29								
	Sub-Loop 2-Wire Intrabuilding Network Cable (INC)	I		UEANL	USBR2	1.35	94.56	29.35					20.35	10.54	13.32	13.32
	Order Coordination for Unbundled Sub-Loops, per sub-loop pair			UEANL	USBMC		34.29	34.29								
	Sub-Loop 4-Wire Intrabuilding Network Cable (INC)	I		UEANL	USBR4	2.26	116.14	37.10					20.35	10.54	13.32	13.32
	Order Coordination for Unbundled Sub-Loops, per sub-loop pair			UEANL	USBMC		34.29	34.29								
	Loop Testing - Basic 1st Half Hour			UEANL	URET1		78.92	78.92								
	Loop Testing - Basic Additional Half Hour			UEANL	URETA		23.33	23.33								
	2 Wire Copper Unbundled Sub-Loop Distribution - Zone 1	I	1	UEF	UCS2X	5.16	110.71	37.89	94.41	13.09			20.35	10.54	13.32	13.32
	2 Wire Copper Unbundled Sub-Loop Distribution - Zone 2	I	2	UEF	UCS2X	6.74	110.71	37.89	94.41	13.09			20.35	10.54	13.32	13.32
	2 Wire Copper Unbundled Sub-Loop Distribution - Zone 3	I	3	UEF	UCS2X	8.81	110.71	37.89	94.41	13.09			20.35	10.54	13.32	13.32
	Order Coordination for Unbundled Sub-Loops, per sub-loop pair			UEF	USBMC		34.29	34.29								
	4 Wire Copper Unbundled Sub-Loop Distribution - Zone 1	I	1	UEF	UCS4X	6.52	117.12	44.30	99.96	16.98			20.35	10.54	13.32	13.32
	4 Wire Copper Unbundled Sub-Loop Distribution - Zone 2	I	2	UEF	UCS4X	8.52	117.12	44.30	99.96	16.98			20.35	10.54	13.32	13.32
	4 Wire Copper Unbundled Sub-Loop Distribution - Zone 3	I	3	UEF	UCS4X	11.14	117.12	44.30	99.96	16.98			20.35	10.54	13.32	13.32
	Order Coordination for Unbundled Sub-Loops, per sub-loop pair			UEF	USBMC		34.29	34.29								
	Loop Testing - Basic 1st Half Hour			UEF	URET1		78.92	78.92								
	Loop Testing - Basic Additional Half Hour			UEF	URETA		23.33	23.33								
	Unbundled Network Terminating Wire (UNTW)															
	Unbundled Network Terminating Wire (UNTW) per Pair	I		UENTW	UENPP	0.4555	2.48	2.48					20.35	10.54	13.32	13.32
	Network Interface Device (NID)															
	Network Interface Device (NID) - 1-2 lines			UENTW	UND12		89.69	54.56	0.6391	0.6391			20.35	10.54	13.32	13.32
	Network Interface Device (NID) - 1-6 lines			UENTW	UND16		129.65	94.51	0.6522	0.6522			20.35	10.54	13.32	13.32
	Network Interface Device Cross Connect - 2 W			UENTW	UNDC2		11.11	11.11					20.35	10.54	13.32	13.32
	Network Interface Device Cross Connect - 4W			UENTW	UNDC4		11.11	11.11					20.35	10.54	13.32	13.32
UNE OTHER, PROVISIONING ONLY - NO RATE																
	NID - Dispatch and Service Order for NID installation			UENTW	UNDBX	0.00	0.00									
	UNTW Circuit Id Establishment, Provisioning Only - No Rate			UENTW	UENCE	0.00	0.00									
	Unbundled Contract Name, Provisioning Only - No Rate			UEANL,UEF,UEQ,UENTW	UNECN	0.00	0.00									
UNE OTHER, PROVISIONING ONLY - NO RATE																
	Unbundled Contact Name, Provisioning Only - no rate			UAL,UCL,UDC,UDL,UDN,UEA,UHL,USL	UNECN	0.00	0.00									
	Unbundled Sub-Loop Feeder-2 Wire Cross Box Jumper - no rate			UEA,UDN,UCL,UDC	USBFQ	0.00	0.00									
	Unbundled Sub-Loop Feeder-4 Wire Cross Box Jumper - no rate			UEA,USL,UCL,UDL	USBFR	0.00	0.00									
	Unbundled DS1 Loop - Superframe Format Option - no rate			USL	CCOSF	0.00	0.00									
	Unbundled DS1 Loop - Expanded Superframe Format option - no rate			USL	CCOEF	0.00	0.00									
HIGH CAPACITY UNBUNDLED LOCAL LOOP																
	High Capacity Unbundled Local Loop - DS3 - Per Mile per month			UE3	1L5ND	9.19										
	High Capacity Unbundled Local Loop - DS3 - Facility Termination per month			UE3	UE3PX	374.24	684.6755	350.175	270.0545	195.684			20.35	10.54		
	High Capacity Unbundled Local Loop - STS-1 - Per Mile per month			UDLSX	1L5ND	9.19										
	High Capacity Unbundled Local Loop - STS-1 - Facility Termination per month			UDLSX	UDLS1	389.35	684.6755	350.175	248.193	173.8225			20.35	10.54		
	Note (1): Rates provided in TN for both electronic and manual Loop Makeup are interim and subject to retro-active true-up adjustments pending a permanent rate ruling on these rate elements from the Tennessee Regulatory Authority.															
LOOP MAKE-UP																
	Loop Makeup - Preordering Without Reservation, per working or spare facility queried (Manual).	R		UMK	UMKLW		0.76	0.76					19.99	19.99	19.99	19.99
	Loop Makeup - Preordering With Reservation, per spare facility queried (Manual).	R		UMK	UMKLP		0.76	0.76					19.99	19.99	19.99	19.99
	Loop Makeup--With or Without Reservation, per working or spare facility queried (Mechanized)	R		UMK	UMKMQ		0.76	0.76								

UNBUNDLED NETWORK ELEMENTS - Tennessee

Attachment: 2 Ex. A

CATEGORY	RATE ELEMENTS	Interim	Zone	BCS	USOC	RATES ($) Rec	Nonrecurring First	Nonrecurring Add'l	Nonrecurring Disconnect First	Nonrecurring Disconnect Add'l	Svc Order Submitted Elec per LSR	Svc Order Submitted Manually per LSR	Incremental Charge - Manual Svc Order vs. Electronic- 1st	Incremental Charge - Manual Svc Order vs. Electronic- Add'l	Incremental Charge - Manual Svc Order vs. Electronic- Disc 1st	Incremental Charge - Manual Svc Order vs. Electronic- Disc Add'l
											OSS Rates ($)					
							First	Add'l	First	Add'l	SOMEC	SOMAN	SOMAN	SOMAN	SOMAN	SOMAN
LINE SPLITTING																
	LINE SPLITTING															
	END USER ORDERING-CENTRAL OFFICE BASED															
	Line Splitting - per line activation DLEC owned splitter			UEPSR UEPSB	UREOS	0.61										
	Line Splitting - per line activation BST owned - physical			UEPSR UEPSB	UREBP	0.61	48.96	21.39	35.06	10.79			20.35	10.54	13.32	13.32
	Line Splitting - per line activation BST owned - virtual			UEPSR UEPSB	UREBV	0.61	48.96	21.39	35.06	10.79			20.35	10.54	13.32	13.32
MAINTENANCE OF SERVICE																
	NOTE: The Expedite charge will be maintained commensurate with BellSouth's FCC No.1 Tariff, Section 13.3.1 as applicable.															
	No Trouble Found - per 1/2 hour increments - Basic						80.00	55.00								
	No Trouble Found - per 1/2 hour increments - Overtime						90.00	65.00								
	No Trouble Found - per 1/2 hour increments - Premium						100.00	75.00								
UNBUNDLED DEDICATED TRANSPORT																
	INTEROFFICE CHANNEL - DEDICATED TRANSPORT															
	Interoffice Channel - Dedicated Transport - 2-Wire Voice Grade - Per Mile per month			U1TVX	1L5XX	0.0054										
	Interoffice Channel - Dedicated Transport- 2- Wire Voice Grade - Facility Termination			U1TVX	U1TV2	18.58	55.39	17.37	27.96	3.51			20.35	21.09		
	Interoffice Channel - Dedicated Transpor t- 2-Wire Voice Grade Rev Bat. - Per Mile per month			U1TVX	1L5XX	0.0054										
	Interoffice Channel - Dedicated Transport- 2- Wire VG Rev Bat. - Facility Termination			U1TVX	U1TR2	18.58	55.39	17.37	27.96	3.51			20.35	21.09		
	Interoffice Channel - Dedicated Transport - 4-Wire Voice Grade - Per Mile per month			U1TVX	1L5XX	0.0054										
	Interoffice Channel - Dedicated Transport - 4- Wire Voice Grade - Facility Termination			U1TVX	U1TV4	24.09	37.87	26.02	30.78	13.07			15.08	15.08		
	Interoffice Channel - Dedicated Transport - 56 kbps - per mile per month			U1TDX	1L5XX	0.0174										
	Interoffice Channel - Dedicated Transport - 56 kbps - Facility Termination			U1TDX	U1TD5	17.98	55.39	17.37	27.96	3.51			20.35	21.09		
	Interoffice Channel - Dedicated Transport - 64 kbps - per mile per month			U1TDX	1L5XX	0.0174										
	Interoffice Channel - Dedicated Transport - 64 kbps - Facility Termination			U1TDX	U1TD6	17.98	55.39	17.37	27.96	3.51			20.35	21.09		
	Interoffice Channel - Dedicated Channel - DS1 - Per Mile per month			U1TD1	1L5XX	0.3562										
	Interoffice Channel - Dedicated Tranport - DS1 - Facility Termination			U1TD1	U1TF1	77.86	112.40	76.27	19.55	14.99			20.35	21.09		
	Interoffice Channel - Dedicated Transport - DS3 - Per Mile per month			U1TD3	1L5XX	2.34										
	Interoffice Channel - Dedicated Transport - DS3 - Facility Termination per month			U1TD3	U1TF3	848.99	395.29	176.56	109.04	105.91			36.84	36.84		
	Interoffice Channel - Dedicated Transport - STS-1 - Per Mile per month			U1TS1	1L5XX	2.34										
	Interoffice Channel - Dedicated Transport - STS-1 - Facility Termination			U1TS1	U1TFS	849.30	395.29	176.56	109.04	105.91			36.84	36.84		
DARK FIBER																
	Dark Fiber, Four Fiber Strands, Per Route Mile or Fraction Thereof per month - Local Channel			UDF, UDFCX	1L5DC	67.65										
	Dark Fiber, Four Fiber Strands, Per Route Mile or Fraction Thereof per month - Interoffice Channel			UDF, UDFCX	1L5DF	28.74										
	NRC Dark Fiber - Interoffice Channel			UDF, UDFCX	UDF14		1,121.00	153.19	580.26	357.17			20.35	10.54	13.32	13.32
	Dark Fiber, Four Fiber Strands, Per Route Mile or Fraction Thereof per month - Local Loop			UDF, UDFCX	1L5DL	67.65										
8XX ACCESS TEN DIGIT SCREENING																
	8XX Access Ten Digit Screening, Per Call					0.0005192										
LINE INFORMATION DATA BASE ACCESS (LIDB)																
	LIDB Common Transport Per Query					0.0000354										
	LIDB Validation Per Query					0.0117403										
	LIDB Originating Point Code Establishment or Change			OQT, OQU	NRBPX		49.03						20.35	20.35	13.28	13.28
CALLING NAME (CNAM) SERVICE																
	CNAM for DB Owners, Per Query					0.0010541										
	CNAM for Non DB Owners, Per Query					0.0010541										
SELECTIVE ROUTING																

UNBUNDLED NETWORK ELEMENTS - Tennessee

Attachment: 2 Ex. A

CATEGORY	RATE ELEMENTS	Interim	Zone	BCS	USOC	RATES ($)					Svc Order Submitted Elec per LSR	Svc Order Submitted Manually per LSR	Incremental Charge - Manual Svc Order vs. Electronic-1st	Incremental Charge - Manual Svc Order vs. Electronic-Add'l	Incremental Charge - Manual Svc Order vs. Electronic-Disc 1st	Incremental Charge - Manual Svc Order vs. Electronic-Disc Add'l
						Rec	Nonrecurring		Nonrecurring Disconnect		OSS Rates ($)					
							First	Add'l	First	Add'l	SOMEC	SOMAN	SOMAN	SOMAN	SOMAN	SOMAN
	Selective Routing Per Unique Line Class Code Per Request Per Switch						179.60	179.60					20.35	20.35		
VIRTUAL COLLOCATION																
	Virtual Collocation-2 Wire Cross Connects (Loop) for Line Splitting			UEPSR UEPSB	VE1LS	0.57	11.62	9.90	10.38	8.66			19.99	19.99	19.99	19.99
PHYSICAL COLLOCATION																
	Physical Collocation-2 Wire Cross Connects (Loop) for Line Splitting			UEPSR UEPSB	PE1LS	0.7905	11.62	9.90	10.38	8.66			19.99	19.99	19.99	19.99
AIN SELECTIVE CARRIER ROUTING																
	Regional Service Establishment						190,638.00						20.35			
	End Office Establishment						317.55	317.55	3.19	3.19			20.35	20.35	13.28	13.28
	Query NRC, per query					0.0206047										
AIN - BELLSOUTH AIN SMS ACCESS SERVICE																
	AIN SMS Access Service - Service Establishment, Per State, Initial Setup			A1N	CAMSE		135.56	135.56					20.35	20.35	13.28	13.28
	AIN SMS Access Service - Port Connection - Dial/Shared Access			A1N	CAMDP		41.75	41.75					20.35	20.35	13.28	13.28
	AIN SMS Access Service - Port Connection - ISDN Access			A1N	CAM1P		41.75	41.75					20.35	20.35	13.28	13.28
	AIN SMS Access Service - User Identification Codes - Per User ID Code			A1N	CAMAU		96.63	96.63					20.35	20.35	13.28	13.28
	AIN SMS Access Service - Security Card, Per User ID Code, Initial or Replacement			A1N	CAMRC		113.67	113.67					20.35	20.35	13.28	13.28
	AIN SMS Access Service - Storage, Per Unit (100 Kilobytes)					0.0024										
	AIN SMS Access Service - Session, Per Minute					0.0820123										
	AIN SMS Access Service - Company Performed Session, Per Minute					2.27										
SIGNALING (CCS7)																
	CCS7 Signaling Usage, Per TCAP Message					0.0000916										
	CCS7 Signaling Usage, Per ISUP Message					0.0000373										
911 PBX LOCATE																
	911 PBX LOCATE DATABASE CAPABILITY															
	Service Establishment per CLEC per End User Account			9PBDC	9PBEU		1,706.00									
	Changes to TN Range or Customer Profile			9PBDC	9PBTN		170.69									
	Per Telephone Number (Monthly)			9PBDC	9PBMM	0.07										
	Change Company (Service Provider) ID			9PBDC	9PBPC		501.06									
	PBX Locate Service Support per CLEC (Monthlt)			9PBDC	9PBMR	191.92										
	Service Order Charge			9PBDC	9PBSC		23.20									
	911 PBX LOCATE TRANSPORT COMPONENT															
	See Att 3															
ENHANCED EXTENDED LINK (EELs)																
	NOTE: The monthly recurring and non-recurring charges below will apply and the Switch-As-Is Charge will not apply for UNE combinations provisioned as ' Ordinarily Combined' Network Elements.															
	NOTE: The monthly recurring and the Switch-As-Is Charge and not the non-recurring charges below will apply for UNE combinations provisioned as ' Currently Combined' Network Elements.															
	2-WIRE VOICE GRADE LOOP FOR USE IN A COMBINATION															
	2-Wire VG Loop (SL2) in Combination - Zone 1		1	UNCVX	UEAL2	16.56	108.76	35.47	72.94	10.86			20.35	21.09		
	2-Wire VG Loop (SL2) in Combination - Zone 2		2	UNCVX	UEAL2	21.63	108.76	35.47	72.94	10.86			20.35	21.09		
	2-Wire VG Loop (SL2) in Combination - Zone 3		3	UNCVX	UEAL2	28.28	108.76	35.47	72.94	10.86			20.35	21.09		
	Voice Grade COCI - Per Month			UNCVX	1D1VG	0.91	5.70	4.42								
	4-WIRE VOICE GRADE LOOP FOR USE IN A COMBINATION															
	4-Wire Analog Voice Grade Loop in Combination - Zone 1		1	UNCVX	UEAL4	24.70	108.76	35.47	72.94	10.86			20.35	21.09		
	4-Wire Analog Voice Grade Loop in Combination - Zone 2		2	UNCVX	UEAL4	32.26	108.76	35.47	72.94	10.86			20.35	21.09		
	4-Wire Analog Voice Grade Loop in Combination - Zone 3		3	UNCVX	UEAL4	42.18	108.76	35.47	72.94	10.86			20.35	21.09		
	Voice Grade COCI in combination - per month			UNCVX	1D1VG	0.91	5.70	4.42								
	4-WIRE 56 KBPS DIGITAL LOOP FOR USE IN A COMBINATION															
	4-Wire 56Kbps Digital Grade Loop in Combination - Zone 1		1	UNCDX	UDL56	31.10	108.76	35.47	72.94	10.86			20.35	21.09		
	4-Wire 56Kbps Digital Grade Loop in Combination - Zone 2		2	UNCDX	UDL56	40.61	108.76	35.47	72.94	10.86			20.35	21.09		
	4-Wire 56Kbps Digital Grade Loop in Combination - Zone 3		3	UNCDX	UDL56	53.11	108.76	35.47	72.94	10.86			20.35	21.09		
	OCU-DP COCI (data) per month (2.4-64kbs)			UNCDX	1D1DD	0.91	5.70	4.42								
	4-WIRE 64 KBPS DIGITAL LOOP FOR USE IN A COMBINATION															
	4-Wire 64Kbps Digital Grade Loop in Combination - Zone 1		1	UNCDX	UDL64	31.10	108.76	35.47	72.94	10.86			20.35	21.09		
	4-Wire 64Kbps Digital Grade Loop in Combination - Zone 2		2	UNCDX	UDL64	40.61	108.76	35.47	72.94	10.86			20.35	21.09		
	4-Wire 64Kbps Digital Grade Loop in Combination - Zone 3		3	UNCDX	UDL64	53.11	108.76	35.47	72.94	10.86			20.35	21.09		
	OCU-DP COCI (data) - in combination - per month (2.4-64kbs)			UNCDX	1D1DD	0.91	5.70	4.42								
	2-WIRE ISDN LOOP FOR USE IN COMBINATION															
	2-Wire ISDN Loop in Combination - Zone 1		1	UNCNX	U1L2X	22.22	108.76	35.47	72.94	10.86			20.35	21.09		

CATEGORY	RATE ELEMENTS	Interim	Zone	BCS	USOC	RATES ($)					Svc Order Submitted Elec per LSR	Svc Order Submitted Manually per LSR	Incremental Charge - Manual Svc Order vs. Electronic-1st	Incremental Charge - Manual Svc Order vs. Electronic-Add'l	Incremental Charge - Manual Svc Order vs. Electronic-Disc 1st	Incremental Charge - Manual Svc Order vs. Electronic-Disc Add'l
						Rec	Nonrecurring		Nonrecurring Disconnect		OSS Rates ($)					
							First	Add'l	First	Add'l	SOMEC	SOMAN	SOMAN	SOMAN	SOMAN	SOMAN
	2-Wire ISDN Loop in Combination - Zone 2		2	UNCNX	U1L2X	29.02	108.76	35.47	72.94	10.86			20.35	21.09		
	2-Wire ISDN Loop in Combination - Zone 3		3	UNCNX	U1L2X	37.95	108.76	35.47	72.94	10.86			20.35	21.09		
	2-wire ISDN COCI (BRITE) - in combination - per month			UNCNX	UC1CA	3.24	5.70	4.42								
4-WIRE DS1 DIGITAL LOOP FOR USE IN A COMBINATION																
	4-Wire DS1 Digital Loop in Combination - Zone 1		1	UNC1X	USLXX	57.73	228.40	161.74	79.87	24.88			20.35	21.09		
	4-Wire DS1 Digital Loop in Combination - Zone 2		2	UNC1X	USLXX	75.40	228.40	161.74	79.87	24.88			20.35	21.09		
	4-Wire DS1 Digital Loop in Combination - Zone 3		3	UNC1X	USLXX	98.59	228.40	161.74	79.87	24.88			20.35	21.09		
	DS1 COCI in combination per month			UNC1X	UC1D1	17.58	5.70	4.42								
2 WIRE VOICE GRADE INTEROFFICE TRANSPORT FOR USE IN A COMBINATION																
	Interoffice Transport - 2-wire VG - Dedicated- Per Mile Per Month			UNCVX	1L5XX	0.0174										
	Interoffice Transport - 2-wire VG - Dedicated - Facility Termination per month			UNCVX	U1TV2	21.79	79.83	44.08	69.32	31.00			20.35	21.09		
4 WIRE VOICE GRADE INTEROFFICE TRANSPORT FOR USE IN A COMBINATION																
	Interoffice Transport - 4-wire VG - Dedicated - Per Mile Per Month			UNCVX	1L5XX	0.0174										
	Interoffice Transport - 4-wire VG - Dedicated - Facility Termination per month			UNCVX	U1TV4	27.30	79.83	44.08	69.32	31.00			20.35	21.09		
DS1 INTEROFFICE TRANSPORT FOR COMBINATION																
	Interoffice Transport - Dedicated - DS1 combination - Per Mile per month			UNC1X	1L5XX	0.3562										
	Interoffice Transport - Dedicated - DS1 combination - Facility Termination per month			UNC1X	U1TF1	77.86	171.24	113.12	70.07	30.90			20.35	21.09		
DS3 INTEROFFICE TRANSPORT FOR USE IN A COMBINATION																
	Interoffice Transport - Dedicated - DS3 combination - Per Mile Per Month			UNC3X	1L5XX	2.34										
	Interoffice Transport - Dedicated - DS3 - Facility Termination per month			UNC3X	U1TF3	854.97	482.01	153.81	64.43	35.43			36.84	36.84		
STS-1 INTEROFFICE TRANSPORT FOR USE IN COMBINATION																
	Interoffice Transport - Dedicated - STS-1 combination - Per Mile Per Month			UNCSX	1L5XX	2.34										
	Interoffice Transport - Dedicated - STS-1 combination - Facility Termination per month			UNCSX	U1TFS	849.30	482.01	153.81	64.43	35.43			36.84	36.84		
4-WIRE 56 KBPS DIGITAL LOOP WITH 56 KBPS INTEROFFICE TRANSPORT																
	4-wire 56 kbps Local Loop in combination - Zone 1		1	UNCDX	UDL56	31.10	108.76	35.47	72.94	10.86						
	4-wire 56 kbps Local Loop in combination - Zone 2		2	UNCDX	UDL56	40.61	108.76	35.47	72.94	10.86						
	4-wire 56 kbps Local Loop in combination - Zone 3		3	UNCDX	UDL56	53.11	108.76	35.47	72.94	10.86						
	Interoffice Transport - Dedicated - 4-wire 56 kbps combination - Per Mile per month			UNCDX	1L5XX	0.0174										
	Interoffice Transport - Dedicated - 4-wire 56 kbps combination - Facility Termination per month			UNCDX	U1TD5	21.19	79.83	44.08	69.32	31.00			20.35	21.09		
4-WIRE 64 KBPS DIGITAL EXTENDED LOOP WITH 64 KBPS INTEROFFICE TRANSPORT																
	4-wire 64 kbps Lcoal Loop in Combination - Zone 1		1	UNCDX	UDL64	31.10	108.76	35.47	72.94	10.86						
	4-wire 64 kbps Lcoal Loop in Combination - Zone 2		2	UNCDX	UDL64	40.61	108.76	35.47	72.94	10.86						
	4-wire 64 kbps Lcoal Loop in Combination - Zone 3		3	UNCDX	UDL64	53.11	108.76	35.47	72.94	10.86						
	Interoffice Transport - Dedicated - 4-wire 64 kbps combination - Per Mile per month			UNCDX	1L5XX	0.0174										
	Interoffice Transport - Dedicated - 4-wire 64 kbps combination - Facility Termination per month			UNCDX	U1TD6	21.19	79.83	44.08	69.32	31.00			20.35	21.09		
4-WIRE 56 KBPS DIGITAL EXTENDED LOOP WITH DS0 INTEROFFICE TRANSPORT																
	4-wire 56 kbps Local Loop in combination - Zone 1		1	UNCDX	UDL56	31.10	108.76	35.47	72.94	10.86						
	4-wire 56 kbps Local Loop in combination - Zone 2		2	UNCDX	UDL56	40.61	108.76	35.47	72.94	10.86						
	4-wire 56 kbps Local Loop in combination - Zone 3		3	UNCDX	UDL56	53.11	108.76	35.47	72.94	10.86						
	4-wiree 56 kbps Interoffice Transport - Dedicated - Per Mile per month			UNCDX	1L5XX	0.0174										
	4-wire 56 kbps Interoffice Transport - Dedicated - Facility Termination per month			UNCDX	U1TD5	21.19	79.83	44.08	69.32	31.00			20.35	21.09		
4-WIRE 64 KBPS DIGITAL EXTENDED LOOP WITH DS0 INTEROFFICE TRANSPORT																
	4-wire 64 kbps Local Loop in combination - Zone 1		1	UNCDX	UDL64	31.10	108.76	35.47	72.94	10.86						
	4-wire 64 kbps Local Loop in combination - Zone 2		2	UNCDX	UDL64	40.61	108.76	35.47	72.94	10.86						
	4-wire 64 kbps Local Loop in combination - Zone 3		3	UNCDX	UDL64	53.11	108.76	35.47	72.94	10.86						
	I4-wire 65 kbps Interoffice Transport - Dedicated - Per Mile per month			UNCDX	1L5XX	0.0174										

UNBUNDLED NETWORK ELEMENTS - Tennessee

Attachment: 2 Ex. A

CATEGORY	RATE ELEMENTS	Interim	Zone	BCS	USOC	RATES ($) Rec	Nonrecurring First	Nonrecurring Add'l	Nonrecurring Disconnect First	Nonrecurring Disconnect Add'l	Svc Order Submitted Elec per LSR	Svc Order Submitted Manually per LSR	Incremental Charge - Manual Svc Order vs. Electronic-1st	Incremental Charge - Manual Svc Order vs. Electronic-Add'l	Incremental Charge - Manual Svc Order vs. Electronic-Disc 1st	Incremental Charge - Manual Svc Order vs. Electronic-Disc Add'l
											OSS Rates ($)					
							First	Add'l	First	Add'l	SOMEC	SOMAN	SOMAN	SOMAN	SOMAN	SOMAN
	4-wire 64 kbps Interoffice Transport - Dedicated - Facility Termination per month			UNCDX	U1TD6	21.19	79.83	44.08	69.32	31.00			20.35	21.09		
	DS1 DIGITAL LOOP AND DS1 INTERFOFFICE TRANSPORT															
	4-Wire DS1 Digital Loop in Combination - Zone 1		1	UNC1X	USLXX	57.73	228.40	161.74	79.87	24.88						
	4-Wire DS1 Digital Loop in Combination - Zone 2		2	UNC1X	USLXX	75.40	228.40	161.74	79.87	24.88						
	4-Wire DS1 Digital Loop in Combination - Zone 3		3	UNC1X	USLXX	98.59	228.40	161.74	79.87	24.88						
	Interoffice Transport - Dedicated - DS1 combination - Per Mile per month			UNC1X	1L5XX	0.3562										
	Interoffice Transport - Dedicated - DS1 combination - Facility Termination per month			UNC1X	U1TF1	77.86	171.24	113.12	70.07	30.90			20.35	21.09		
	DS3 DIGITAL LOOP WITH DEDICATED DS3 INTEROFFICE TRANSPORT															
	DS3 Local Loop in combination - per mile per month			UNC3X	1L5ND	9.19										
	DS3 Local Loop in combination - Facility Termination per month			UNC3X	UE3PX	373.47	240.23	180.87	106.78	45.24						
	Interoffice Transport - Dedicated - DS3 - Per Mile per month			UNC3X	1L5XX	2.34										
	Interoffice Transport - Dedicated - DS3 combination - Facility Termination per month			UNC3X	U1TF3	854.97	482.01	153.81	64.43	35.43			36.84	36.84		
	STS-1 DIGITAL LOOP WITH DEDICATED STS-1 INTEROFFICE TRANSPORT															
	STS-1 Local Lolp in combination - per mile per month			UNCSX	1L5ND	9.19										
	STS-1 Local Loop in combination - Facility Termination per month			UNCSX	UDLS1	394.56	240.23	180.87	106.78	45.24						
	Interoffice Transport - Dedicated - STS-1 combination - per mile per month			UNCSX	1L5XX	2.34										
	Interoffice Transport - Dedicated - STS-1 combination - Facility Termination per month			UNCSX	U1TFS	849.30	482.01	153.81	64.43	35.43			36.84	36.84		
ADDITIONAL NETWORK ELEMENTS																
	When used as a part of a currently combined facility, the non-recurrng charges do not apply, but a Switch As Is charge does apply.															
	When used as ordinarily combined network elements in All States, the non-recurring charges apply and the Switch As Is Charge does not.															
	Commingling Authorization			UNCVX, UNCDX, UNC1X, UNC3X, UNCSX, U1TD1, U1TD3, U1TS1, UE3, UDLSX, U1TVX, U1TDX, U1TUB	CMGAU	0.00	0.00	0.00	0.00	0.00						
	Nonrecurring Currently Combined Network Elements "Switch As Is" Charge (One applies to each combination)															
	Nonrecurring Currently Combined Network Elements Switch -As-Is Charge			UNCVX, UNCDX, UNC1X, UNC3X, UNCSX	UNCCC		52.73	24.62	9.12	9.12			53.73	24.62		
	Optional Features & Functions:															
	Clear Channel Capability Extended Frame Option - per DS1	I		U1TD1, ULDD1,UNC1X	CCOEF		0.00	0.00	0.00	0.00						
	Clear Channel Capability Super FrameOption - per DS1	i		U1TD1, ULDD1,UNC1X	CCOSF		0.00	0.00	0.00	0.00						
	Clear Channel Capability (SF/ESF) Option - Subsequent Activity - per DS1	I		ULDD1, U1TD1, UNC1X, USL	NRCCC		185.16	23.85	2.03	0.79			45.68	1.76		
	C-bit Parity Option - Subsequent Activity - per DS3	i		U1TD3, ULDD3, UE3, UNC3X	NRCC3		219.46	7.68	0.7637	0.00			45.68	1.76		
	MULTIPLEXERS															
	DS1 to DS0 Channel System per month			UNC1X	MQ1	80.77	105.76	14.48	3.04	2.74			20.35	9.80		
	OCU-DP COCI (data) - DS1 to DS0 Channel System - per month (2.4-64kbs) used for a Local Loop			UDL	1D1DD	1.82	6.07	4.66						9.80		
	OCU-DP COCI (data) - DS1 to DS0 Channel System - per month (2.4-64kbs) used for connection to a channelized DS1 Local Channel in the same SWC as collocation			U1TUD	1D1DD	1.82	6.07	4.66								
	2-wire ISDN COCI (BRITE) - DS1 to DS0 Channel Systsem - per month for a Local Loop			UDN	UC1CA	3.10	6.07	4.66								
	2-wire ISDN COCI (BRITE) - DS1 to DS0 Channel Systsem - per month used for connection to a channelized DS1 Local Channel in the same SWC as collocation			U1TUB	UC1CA	3.10	6.07	4.66								
	Voice Grade COCI - DS1 to DS0 Channel System - per month used for a Local Loop			UEA	1D1VG	0.91	6.07	4.66								

CATEGORY	RATE ELEMENTS	Interim	Zone	BCS	USOC	RATES ($)					Svc Order Submitted Elec per LSR	Svc Order Submitted Manually per LSR	Incremental Charge - Manual Svc Order vs. Electronic-1st	Incremental Charge - Manual Svc Order vs. Electronic-Add'l	Incremental Charge - Manual Svc Order vs. Electronic-Disc 1st	Incremental Charge - Manual Svc Order vs. Electronic-Disc Add'l
						Rec	Nonrecurring		Nonrecurring Disconnect		OSS Rates ($)					
							First	Add'l	First	Add'l	SOMEC	SOMAN	SOMAN	SOMAN	SOMAN	SOMAN
	Voice Grade COCI - DS1 to DS0 Channel System - per month used for connection to a channelized DS1 Local Channel in the same SWC as collocation			U1TUC	1D1VG	0.91	6.07	4.66								
	DS3 to DS1 Channel System per month			UNC3X	MQ3	222.98	156.02	49.41	17.12	6.77			20.35	9.80		
	STS-1 to DS1 Channel System per month			UNCSX	MQ3	222.98	156.02	49.41	17.12	6.77			20.35	9.80		
	DS1 COCI used with Loop per month			USL	UC1D1	17.58	6.07	4.66								
	DS1 COCI (used for connection to a channelized DS1 Local Channel in the same SWC as collocation) per month			U1TUA	UC1D1	17.58	6.07	4.66								
	DS1 COCI used with Interoffice Channel per month			U1TD1	UC1D1	17.58	6.07	4.66								
	DS3 Interface Unit (DS1 COCI) used with Local Channel per month			ULDD1	UC1D1	17.58	6.07	4.66								
UNBUNDLED LOCAL EXCHANGE SWITCHING(PORTS)																
	The Exchange Switching Port Rates Reflected Here Apply to Embedded Base Switching Ports as of March 10, 2005 and Consist of the TELRIC Cost Based Rates Plus $1.00 in Accordance with the TRRO.															
	Exchange Ports															
	NOTE: Although the Port Rate includes all available features in GA, KY, LA & TN, the desired features will need to be ordered using retail USOCs															
	2-WIRE VOICE GRADE LINE PORT RATES (RES)															
	Exchange Ports - 2-Wire Analog Line Port- Res.			UEPSR	UEPRL	2.89	9.93	9.19	3.66	2.92			20.35	10.54	13.32	1.40
	Exchange Ports - 2-Wire Analog Line Port with Caller ID - Res.			UEPSR	UEPRC	2.89	9.93	9.19	3.66	2.92			20.35	10.54	13.32	1.40
	Exchange Ports - 2-Wire Analog Line Port outgoing only - Res.			UEPSR	UEPRO	2.89	9.93	9.19	3.66	2.92			20.35	10.54	13.32	1.40
	Exchange Ports - 2-Wire VG unbundled TN extended local dialing parity Port with Caller ID - Res.			UEPSR	UEPAQ	2.89	9.93	9.19	3.66	2.92			20.35	10.54	13.32	1.40
	Exchange Ports - 2-Wire VG unbundled Tennessee Area Plus with Caller ID - Res (AC7)			UEPSR	UEPAH	2.89	9.93	9.19	3.66	2.92			20.35	10.54	13.32	1.40
	Exchange Ports - 2-Wire VG unbundled Tennessee Area Calling port with Caller ID - Res (F2R)			UEPSR	UEPAK	2.89	9.93	9.19	3.66	2.92			20.35	10.54	13.32	1.40
	Exchange Ports - 2-Wire VG unbundled Tennessee Area Calling port with Caller ID - Res (TACER)			UEPSR	UEPAL	2.89	9.93	9.19	3.66	2.92			20.35	10.54	13.32	1.40
	Exchange Ports - 2-Wire VG unbundled Tennessee Area Calling port with Caller ID - Res (TACSR)			UEPSR	UEPAM	2.89	9.93	9.19	3.66	2.92			20.35	10.54	13.32	1.40
	Exchange Ports - 2-Wire VG unbundled Tennessee Area Calling port with Caller ID - Res (1MF2X)			UEPSR	UEPAN	2.89	9.93	9.19	3.66	2.92			20.35	10.54	13.32	1.40
	Exchange Ports - 2-Wire VG unbundled Tennessee Area Calling port with Caller ID - Res (2MR)			UEPSR	UEPAO	2.89	9.93	9.19	3.66	2.92			20.35	10.54	13.32	1.40
	Exchange Ports - 2-Wire VG unbundled res, low usage line port with Caller ID (LUM)			UEPSR	UEPAP	2.89	9.93	9.19	3.66	2.92			20.35	10.54	13.32	1.40
	Exchange Port - 2-Wire VG Tennessee Residence Dialing Plan without Caller ID			UEPSR	UEPWN	2.89	9.93	9.19	3.66	2.92			20.35	10.54	13.32	1.40
	Exchange Port - 2-Wire VG Tennessee Residence Area Plus without Caller ID			UEPSR	UEPRR	2.89	9.93	9.19	3.66	2.92			20.35	10.54	13.32	1.40
	2-Wire voice unbundled Low Usage Line Port without Caller ID Capability			UEPSR	UEPRT	2.89	9.93	9.19	3.66	2.92			20.35	10.54	13.32	1.40
	Subsequent Activity			UEPSR	USASC	0.00	0.00	0.00					20.35	10.54	13.32	1.40
	FEATURES															
	All Available Vertical Features			UEPSR	UEPVF	0.00	0.00	0.00					20.35	10.54	13.32	1.40
	2-WIRE VOICE GRADE LINE PORT RATES (BUS)															
	Exchange Ports - 2-Wire Analog Line Port without Caller ID - Bus			UEPSB	UEPBL	2.89	9.93	9.19	3.66	2.92			20.35	10.54	13.32	1.40
	Exchange Ports - 2-Wire VG unbundled Line Port with unbundled port with Caller+E484 ID - Bus.			UEPSB	UEPBC	2.89	9.93	9.19	3.66	2.92			20.35	10.54	13.32	1.40
	Exchange Ports - 2-Wire Analog Line Port outgoing only - Bus.			UEPSB	UEPBO	2.89	9.93	9.19	3.66	2.92			20.35	10.54	13.32	1.40
	Exchange Ports - 2-Wire VG unbundled TN extended local dialing parity Port with Caller ID - Bus.			UEPSB	UEPAV	2.89	9.93	9.19	3.66	2.92			20.35	10.54	13.32	1.40
	Exhange Ports - 2-Wire VG unbundled incoming only port with Caller ID - Bus			UEPSB	UEPB1	2.89	9.93	9.19	3.66	2.92			20.35	10.54	13.32	1.40
	Exchange Ports - 2-Wire VG unbundled TN Bus 2-Way Area Calling Port Economy Option - Bus (TACC1)			UEPSB	UEPAC	2.89	9.93	9.19	3.66	2.92			20.35	10.54	13.32	1.40
	Exchange Ports - 2-Wire VG unbundled TN Bus 2-Way Area Calling Port Standard Option - Bus (TACC2)			UEPSB	UEPAD	2.89	9.93	9.19	3.66	2.92			20.35	10.54	13.32	1.40
	Exchange Ports - 2-W VG unbundled TN Bus 2-Way Collierville & Memphis Local Calling Port - Bus (B2F)			UEPSB	UEPAE	2.89	9.93	9.19	3.66	2.92			20.35	10.54	13.32	1.40

UNBUNDLED NETWORK ELEMENTS - Tennessee

Attachment: 2 Ex. A

CATEGORY	RATE ELEMENTS	Interim	Zone	BCS	USOC	RATES ($)					Svc Order Submitted Elec per LSR	Svc Order Submitted Manually per LSR	Incremental Charge - Manual Svc Order vs. Electronic-1st	Incremental Charge - Manual Svc Order vs. Electronic-Add'l	Incremental Charge - Manual Svc Order vs. Electronic-Disc 1st	Incremental Charge - Manual Svc Order vs. Electronic-Disc Add'l
						Rec	Nonrecurring		Nonrecurring Disconnect		OSS Rates ($)					
							First	Add'l	First	Add'l	SOMEC	SOMAN	SOMAN	SOMAN	SOMAN	SOMAN
	Exchange Ports - 2-W VG unbundled TN Bus 2-Way Collierville & Memphis Local Calling Port			UEPSB	UEPB2	2.89	9.93	9.19	3.66	2.92			20.35	10.54	13.32	1.40
	Exchange Ports - 2-W VG unbundled TN, Business Line Inward, Collierville & Memphis Local Calling Plan			UEPSB	UEPB3	2.89	9.93	9.19	3.66	2.92			20.35	10.54	13.32	1.40
	Exchange Ports - 2-Wire Voice Tennessee Business Dialing Plan without Caller ID			UEPSB	UEPWO	2.89	9.93	9.19	3.66	2.92			20.35	10.54	13.32	1.40
	2-Wire voice unbundled Incoming Only Port without Caller ID Capability			UEPSB	UEPBE	2.89	9.93	9.19	3.66	2.92			20.35	10.54	13.32	1.40
	Subsequent Activity			UEPSB	USASC	0.00	0.00	0.00					20.35	10.54	13.32	1.40
FEATURES																
	All Available Vertical Features			UEPSB	UEPVF	0.00	0.00	0.00					20.35	10.54	13.32	1.40
EXCHANGE PORT RATES (DID & PBX)																
	2-Wire VG Unbundled 2-Way PBX Trunk - Res			UEPSE	UEPRD	2.79	9.93	9.19	3.66	2.92			20.35	10.54	13.32	1.40
	2-Wire VG Line Side Unbundled 2-Way PBX Trunk - Bus			UEPSP	UEPPC	2.79	9.93	9.19	3.66	2.92			20.35	10.54	13.32	1.40
	2-Wire VG Line Side Unbundled Outward PBX Trunk - Bus			UEPSP	UEPPO	2.79	9.93	9.19	3.66	2.92			20.35	10.54	13.32	1.40
	2-Wire VG Line Side Unbundled Incoming PBX Trunk - Bus			UEPSP	UEPP1	2.79	9.93	9.19	3.66	2.92			20.35	10.54	13.32	1.40
	2-Wire Analog Long Distance Terminal PBX Trunk - Bus			UEPSP	UEPLD	2.79	9.93	9.19	3.66	2.92			20.35	10.54	13.32	1.40
	2-Wire Analog TN 2-Way Calling Plan PBX Trunk - Bus			UEPSP	UEPT2	2.79	9.93	9.19	3.66	2.92			20.35	10.54	13.32	1.40
	2-Wire TN Outward Calling Plan PBX Trunk - Bus			UEPSP	UEPTO	2.79	9.93	9.19	3.66	2.92			20.35	10.54	13.32	1.40
	2-Wire Voice Unbundled PBX LD Terminal Ports			UEPSP	UEPLD	2.79	9.93	9.19	3.66	2.92			20.35	10.54	13.32	1.40
	2-Wire Voice Unbundled 2-Way PBX Tennessee Calling Port			UEPSP	UEPT2	2.79	9.93	9.19	3.66	2.92			20.35	10.54	13.32	1.40
	2-Wire Voice Unbundled 1-Way Outgoing PBX Tennessee Calling Port			UEPSP	UEPTO	2.79	9.93	9.19	3.66	2.92			20.35	10.54	13.32	1.40
	2-Wire Vice Unbundled 2-Way PBX Usage Port			UEPSP	UEPXA	2.79	9.93	9.19	3.66	2.92			20.35	10.54	13.32	1.40
	2-Wire Voice Unbundled PBX Toll Terminal Hotel Ports			UEPSP	UEPXB	2.79	9.93	9.19	3.66	2.92			20.35	10.54	13.32	1.40
	2-Wire Voice Unbundled PBX LD DDD Terminals Port			UEPSP	UEPXC	2.79	9.93	9.19	3.66	2.92			20.35	10.54	13.32	1.40
	2-Wire Voice Unbundled PBX LD Terminal Switchboard Port			UEPSP	UEPXD	2.79	9.93	9.19	3.66	2.92			20.35	10.54	13.32	1.40
	2-Wire Voice Unbundled PBX LD Terminal Switchboard IDD Capable Port			UEPSP	UEPXE	2.79	9.93	9.19	3.66	2.92			20.35	10.54	13.32	1.40
	2-Wire Voice Unbundled 2-Way PBX Hotel/Hospital Economy Administrative Calling Port			UEPSP	UEPXL	2.79	9.93	9.19	3.66	2.92			20.35	10.54	13.32	1.40
	2-Wire Voice Unbundled 2-Way PBX Hotel/Hospital Economy Room Calling Port			UEPSP	UEPXM	2.79	9.93	9.19	3.66	2.92			20.35	10.54	13.32	1.40
	2-W Voice Unbundled 1-Way Out PBX Hotel/Hospital Economy Administrative Calling Port TN Calling Port			UEPSP	UEPXN	2.79	9.93	9.19	3.66	2.92			20.35	10.54	13.32	1.40
	2-Wire Voice Unbundled 1-Way Outgoing PBX Hotel/Hospital Discount Room Calling Port			UEPSP	UEPXO	2.79	9.93	9.19	3.66	2.92			20.35	10.54	13.32	1.40
	Unbundled Exchange Ports, PBX Trunk Combination, Collierville and Memphis Local Calling Plan			UEPSP	UEPA6	2.79	9.93	9.19	3.66	2.92			20.35	10.54	13.32	1.40
	Unbundled Exchange Ports, PBX Trunk Combination, first trunk, Collierville and Memphis Local Calling Plan			UEPSP	UEPA7	2.79	9.93	9.19	3.66	2.92			20.35	10.54	13.32	1.40
	2-Wire Voice Unbundled 1-Way Outgoing PBX Measured Port			UEPSP	UEPXS	2.79	9.93	9.19	3.66	2.92			20.35	10.54	13.32	1.40
	2-Wire Voice Unbundled PBX Collierville and Memphis Calling Port			UEPSP	UEPXU	2.79	9.93	9.19	3.66	2.92			20.35	10.54	13.32	1.40
	2-Wire Voice Unbundled 2-Way PBX Tennessee RegionServ Calling Port			UEPSP	UEPXV	2.79	9.93	9.19	3.66	2.92			20.35	10.54	13.32	1.40
	Subsequent Activity			UEPSP	USASC	0.00	0.00	0.00					20.35	10.54	13.32	1.40
FEATURES																
	All Available Vertical Features			UEPSP UEPSE	UEPVF	0.00	0.00	0.00								
NOTE: Transmission/usage charges associated with POTS circuit switched usage will also apply to circuit switched voice and/or circuit switched data transmission by B-Channels associated with 2-wire ISDN ports.																
NOTE: Access to B Channel or D Channel Packet capabilities will be available only through BFR/New Business Request Process. Rates for the packet capabilities will be determined via the Bona Fide Request/New Business Request Process.																
2-WIRE VOICE GRADE LINE PORT RATES (DID)																
	Exchange Ports - 2-Wire DID Port			UEPEX	UEPP2	9.97	47.75	47.01	9.21	8.47			20.35	10.54	13.32	1.40
2-WIRE VOICE GRADE LINE PORT RATES (ISDN-BRI)																
	Exchange Ports - 2-Wire ISDN Port (See Notes below.)			UEPTX, UEPSX	U1PMA	17.26	30.23	29.49	4.10	4.10			20.35	10.54	13.32	1.40
	All Features Offered			UEPTX, UEPSX	UEPVF	0.00	0.00	0.00								
	Exchange Ports - 2-Wire ISDN Port -- Channel Profiles			UEPTX, UEPSX	U1UMA	0.00	0.00	0.00								
NOTE: Transmission/usage charges associated with POTS circuit switched usage will also apply to circuit switched voice and/or circuit switched data transmission by B-Channels associated with 2-wire ISDN ports.																
NOTE: Access to B Channel or D Channel Packet capabilities will be available only through BFR/New Business Request Process. Rates for the packet capabilities will be determined via the Bona Fide Request/New Business Request Process.																
UNBUNDLED PORT with REMOTE CALL FORWARDING CAPABILITY																
UNBUNDLED REMOTE CALL FORWARDING SERVICE - RESIDENCE																
	Unbundled Remote Call Forwarding Service, Area Calling, Res			UEPVR	UERAC	2.89	9.93	9.19	3.66	2.92			20.35	10.54	13.32	1.40
	Unbundled Remote Call Forwarding Service, Local Calling - Res			UEPVR	UERLC	2.89	9.93	9.19	3.66	2.92			20.35	10.54	13.32	1.40
	Unbundled Remote Call Forwarding Service, InterLATA - Res			UEPVR	UERTE	2.89	9.93	9.19	3.66	2.92			20.35	10.54	13.32	1.40

UNBUNDLED NETWORK ELEMENTS - Tennessee

Attachment: 2 Ex. A

CATEGORY	RATE ELEMENTS	Interim	Zone	BCS	USOC	RATES ($) Rec	Nonrecurring First	Nonrecurring Add'l	Nonrecurring Disconnect First	Nonrecurring Disconnect Add'l	Svc Order Submitted Elec per LSR	Svc Order Submitted Manually per LSR	Incremental Charge - Manual Svc Order vs. Electronic-1st	Incremental Charge - Manual Svc Order vs. Electronic-Add'l	Incremental Charge - Manual Svc Order vs. Electronic-Disc 1st	Incremental Charge - Manual Svc Order vs. Electronic-Disc Add'l
											OSS Rates ($)					
							First	Add'l	First	Add'l	SOMEC	SOMAN	SOMAN	SOMAN	SOMAN	SOMAN
	Unbundled Remote Call Forwarding Service, IntraLATA - Res			UEPVR	UERTR	2.89	9.93	9.19	3.66	2.92			20.35	10.54	13.32	1.40
	Non-Recurring															
	Unbundled Remote Call Forwarding Service - Conversion - Switch-as-is			UEPVR	USAC2		1.03	0.29								
	Unbundled Remote Call Forwarding Service - Conversion with allowed change (PIC and LPIC)			UEPVR	USACC		1.03	0.29								
	UNBUNDLED REMOTE CALL FORWARDING - Bus															
	Unbundled Remote Call Forwarding Service, Area Calling - Bus			UEPVB	UERAC	2.89	9.93	9.19	3.66	2.92			20.35	10.54	13.32	1.40
	Unbundled Remote Call Forwarding Service, Local Calling - Bus			UEPVB	UERLC	2.89	9.93	9.19	3.66	2.92			20.35	10.54	13.32	1.40
	Unbundled Remote Call Forwarding Service, InterLATA - Bus			UEPVB	UERTE	2.89	9.93	9.19	3.66	2.92			20.35	10.54	13.32	1.40
	Unbundled Remote Call Forwarding Service, IntraLATA - Bus			UEPVB	UERTR	2.89	9.93	9.19	3.66	2.92			20.35	10.54	13.32	1.40
	Unbundled Remote Call Forwarding Service Expanded and Exception Local Calling			UEPVB	UERVJ	2.89	9.93	9.19	3.66	2.92			20.35	10.54	13.32	1.40
	Non-Recurring															
	Unbundled Remote Call Forwarding Service - Conversion - Switch-as-is			UEPVB	USAC2		1.03	0.29								
	Unbundled Remote Call Forwarding Service - Conversion with allowed change (PIC and LPIC)			UEPVB	USACC		1.03	0.29								
UNBUNDLED LOCAL SWITCHING, PORT USAGE																
	End Office Switching (Port Usage)															
	End Office Switching Function, Per MOU					0.0008041										
	Tandem Switching (Port Usage) (Local or Access Tandem)															
	Tandem Switching Function Per MOU					0.0009778										
	Tandem Switching Function Per MOU (Melded)					.000380364										
	Melded Factor: 38.90% of the Tandem Rate															
	Common Transport															
	Common Transport - Per Mile, Per MOU					0.0000064										
	Common Transport - Facilities Termination Per MOU					0.0003871										
UNBUNDLED PORT/LOOP COMBINATIONS - COST BASED RATES																
	>Cost Based Rates are applied where BellSouth is required by FCC and/or State Commission rule to provide Unbundled Local Switching or Switch Ports.															
	> The UNE-P Switching Port Rates Reflected in the Cost Based Section Apply to Embedded Base UNE-Ps as of March 10, 2005 and Consist of the TELRIC Cost Based Rates Plus $1.00 in Accordance with the TRRO.															
	>Features shall apply to the Unbundled Port/Loop Combination - Cost Based Rate section in the same manner as they are applied to the Stand-Alone Unbundled Port section of this Rate Exhibit.															
	>End Office and Tandem Switching Usage and Common Transport Usage rates in the Port section of this rate exhibit shall apply to all combinations of loop/port network elements except for UNE Coin Port/Loop Combinations.															
	>The first and additional Port nonrecurring charges apply to Not Currently Combined Combos. For Currently Combined Combos the nonrecurring charges shall be those identified in the Nonrecurring - Currently Combined sections.															
	2-WIRE VOICE GRADE LOOP WITH 2-WIRE LINE PORT (RES)															
	UNE Port/Loop Combination Rates															
	2-Wire VG Loop/Port Combo - Zone 1					15.18										
	2-Wire VG Loop/Port Combo - Zone 2					19.01										
	2-Wire VG Loop/Port Combo - Zone 3					24.02										
	UNE Loop Rates															
	2-Wire Voice Grade Loop (SL1) - Zone 1		1	UEPRX	UEPLX	12.48										
	2-Wire Voice Grade Loop (SL1) - Zone 2		2	UEPRX	UEPLX	16.31										
	2-Wire Voice Grade Loop (SL1) - Zone 3		3	UEPRX	UEPLX	21.32										
	2-Wire Voice Grade Line Port Rates (Res)															
	2-Wire voice unbundled port - residence			UEPRX	UEPRL	2.70	22.14	15.25	8.45	3.91			20.35	10.54	13.32	13.32
	2-Wire voice unbundled port with Caller ID - res			UEPRX	UEPRC	2.70	22.14	15.25	8.45	3.91			20.35	10.54	13.32	13.32
	2-Wire voice unbundled port outgoing only - res			UEPRX	UEPRO	2.70	22.14	15.25	8.45	3.91			20.35	10.54	13.32	13.32
	2-Wire voice Grade unbundled Tennessee extended local dialing parity port with Caller ID - res			UEPRX	UEPAQ	2.70	22.14	15.25	8.45	3.91			20.35	10.54	13.32	13.32
	2-Wire voice unbundled Tennessee Area Plus with Caller ID - res (AC7)			UEPRX	UEPAH	2.70	22.14	15.25	8.45	3.91			20.35	10.54	13.32	13.32
	2-Wire voice unbundled Tennessee Area Calling port with Caller ID - res (F2R)			UEPRX	UEPAK	2.70	22.14	15.25	8.45	3.91			20.35	10.54	13.32	13.32
	2-Wire voice unbundled Tennessee Area Calling port with Caller ID - res (TACER)			UEPRX	UEPAL	2.70	22.14	15.25	8.45	3.91			20.35	10.54	13.32	13.32
	2-Wire voice unbundled Tennessee Area Calling port with Caller ID - res (TACSR)			UEPRX	UEPAM	2.70	22.14	15.25	8.45	3.91			20.35	10.54	13.32	13.32

UNBUNDLED NETWORK ELEMENTS - Tennessee

Attachment: 2 Ex. A

CATEGORY	RATE ELEMENTS	Interim	Zone	BCS	USOC	RATES ($)					Svc Order Submitted Elec per LSR	Svc Order Submitted Manually per LSR	Incremental Charge - Manual Svc Order vs. Electronic-1st	Incremental Charge - Manual Svc Order vs. Electronic-Add'l	Incremental Charge - Manual Svc Order vs. Electronic-Disc 1st	Incremental Charge - Manual Svc Order vs. Electronic-Disc Add'l
						Rec	Nonrecurring		Nonrecurring Disconnect		OSS Rates ($)					
							First	Add'l	First	Add'l	SOMEC	SOMAN	SOMAN	SOMAN	SOMAN	SOMAN
	2-Wire voice unbundled Tennessee Area Calling port with Caller ID - res (1MF2X)			UEPRX	UEPAN	2.70	22.14	15.25	8.45	3.91			20.35	10.54	13.32	13.32
	2-Wire voice unbundled Tennessee Area Calling port with Caller ID - res (2MR)			UEPRX	UEPAO	2.70	22.14	15.25	8.45	3.91			20.35	10.54	13.32	13.32
	2-Wire voice unbundles res, low usage line port with Caller ID (LUM)			UEPRX	UEPAP	2.70	22.14	15.25	8.45	3.91			20.35	10.54	13.32	13.32
	2-Wire Voice Unbundled Tennessee Residence Dialing Plan without Caller ID			UEPRX	UEPWN	2.70	22.14	15.25	8.45	3.91			20.35	10.54	13.32	13.32
	2-Wire voice unbundled Tennessee Area Plus Port without Caller ID Capability			UEPRX	UEPRR	2.70	22.14	15.25	8.45	3.91			20.35	10.54	13.32	13.32
	2-Wire voice unbundled Low Usage Line Port without Caller ID Capability			UEPRX	UEPRT	2.70	22.14	15.25	8.45	3.91			20.35	10.54	13.32	13.32
FEATURES																
	All Features Offered			UEPRX	UEPVF	0.00	0.00	0.00								
NONRECURRING CHARGES (NRCs) - CURRENTLY COMBINED																
	2-Wire Voice Grade Loop / Line Port Combination - Conversion - Switch-as-is			UEPRX	USAC2		1.03	0.29								
	2-Wire Voice Grade Loop / Line Port Combination - Conversion - Switch with change			UEPRX	USACC		1.03	0.29								
	2-Wire Voice Grade Loop / Line Port Combination - Conversion - Subsequent Database Update						0.76									
	2-Wire Voice Grade Loop / Line Port Platform - Installation Charge at QuickService location - Not Conversion of Existing Service			UEPRX	URECC		1.03									
ADDITIONAL NRCs																
	2-Wire Voice Grade Loop/Line Port Combination - Subsequent Activity			UEPRX	USAS2	0.00	0.00	0.00								
	Unbundled Miscellaneous Rate Element, Tag Loop at End User Premise			UEPRX	URETL		8.33	0.83					20.35	10.54	13.32	13.32
OFF/ON PREMISES EXTENSION CHANNELS																
	2 Wire Analog Voice Grade Extension Loop – Non-Design		1	UEPRX	UEAEN	13.19	31.99	20.02	10.65	1.41			20.35	10.54	13.32	13.32
	2 Wire Analog Voice Grade Extension Loop – Non-Design		2	UEPRX	UEAEN	17.23	31.99	20.02	10.65	1.41			20.35	10.54	13.32	13.32
	2 Wire Analog Voice Grade Extension Loop – Non-Design		3	UEPRX	UEAEN	22.53	31.99	20.02	10.65	1.41			20.35	10.54	13.32	13.32
	2 Wire Analog Voice Grade Extension Loop – Design		1	UEPRX	UEAED	16.56	75.06	48.20	28.70	17.64			20.35	10.54	13.32	13.32
	2 Wire Analog Voice Grade Extension Loop – Design		2	UEPRX	UEAED	21.63	75.06	48.20	28.70	17.64			20.35	10.54	13.32	13.32
	2 Wire Analog Voice Grade Extension Loop – Design		3	UEPRX	UEAED	28.28	75.06	48.20	28.70	17.64			20.35	10.54	13.32	13.32
INTEROFFICE TRANSPORT																
	Interoffice Transport - Dedicated - 2 Wire Voice Grade - Facility Termination			UEPRX	U1TV2	18.58	55.39	17.37	27.96	3.51						
	Interoffice Transport - Dedicated - 2 Wire Voice Grade - Per Mile or Fraction Mile			UEPRX	U1TVM	0.0174	0.00	0.00								
2-WIRE VOICE GRADE LOOP WITH 2-WIRE LINE PORT (BUS)																
UNE Port/Loop Combination Rates																
	2-Wire VG Loop/Port Combo - Zone 1					15.18										
	2-Wire VG Loop/Port Combo - Zone 2					19.01										
	2-Wire VG Loop/Port Combo - Zone 3					24.02										
UNE Loop Rates																
	2-Wire Voice Grade Loop (SL1) - Zone 1		1	UEPBX	UEPLX	12.48										
	2-Wire Voice Grade Loop (SL1) - Zone 2		2	UEPBX	UEPLX	16.31										
	2-Wire Voice Grade Loop (SL1) - Zone 3		3	UEPBX	UEPLX	21.32										
2-Wire Voice Grade Line Port (Bus)																
	2-Wire voice unbundled port without Caller ID - bus			UEPBX	UEPBL	2.70	22.14	15.25	8.45	3.91			20.35	10.54	13.32	13.32
	2-Wire voice unbundled port with Caller + E484 ID - bus			UEPBX	UEPBC	2.70	22.14	15.25	8.45	3.91			20.35	10.54	13.32	13.32
	2-Wire voice unbundled port outgoing only - bus			UEPBX	UEPBO	2.70	22.14	15.25	8.45	3.91			20.35	10.54	13.32	13.32
	2-Wire voice Grade unbundled Tennessee extended local dialing parity port with Caller ID - bus			UEPBX	UEPAV	2.70	22.14	15.25	8.45	3.91			20.35	10.54	13.32	13.32
	2-Wire voice unbundled incoming only port with Caller ID - Bus			UEPBX	UEPB1	2.70	22.14	15.25	8.45	3.91			20.35	10.54	13.32	13.32
	2-Wire voice unbundled Tennessee Bus 2-Way Area Calling Port Economy Option (TACC1)			UEPBX	UEPAC	2.70	22.14	15.25	8.45	3.91			20.35	10.54	13.32	13.32
	2-Wire voice unbundled Tennessee Bus 2-Way Area Calling Port Standard Option (TACC2)			UEPBX	UEPAD	2.70	22.14	15.25	8.45	3.91			20.35	10.54	13.32	13.32
	2-Wire voice unbundled Tennessee Bus 2-Way Collierville and Memphis Local Calling Port (B2F)			UEPBX	UEPAE	2.70	22.14	15.25	8.45	3.91			20.35	10.54	13.32	13.32

UNBUNDLED NETWORK ELEMENTS - Tennessee

Attachment: 2 Ex. A

CATEGORY	RATE ELEMENTS	Interim	Zone	BCS	USOC	RATES ($)					Svc Order Submitted Elec per LSR	Svc Order Submitted Manually per LSR	Incremental Charge - Manual Svc Order vs. Electronic-1st	Incremental Charge - Manual Svc Order vs. Electronic-Add'l	Incremental Charge - Manual Svc Order vs. Electronic-Disc 1st	Incremental Charge - Manual Svc Order vs. Electronic-Disc Add'l
						Rec	Nonrecurring		Nonrecurring Disconnect		OSS Rates ($)					
							First	Add'l	First	Add'l	SOMEC	SOMAN	SOMAN	SOMAN	SOMAN	SOMAN
	2-Wire Voice Unbundled Tennessee Business Dialing Plan without Caller ID			UEPBX	UEPWO	2.70	22.14	15.25	8.45	3.91			20.35	10.54	13.32	13.32
	Tennessee Inward Collierville and Memphis Local Calling Plan (BUS)			UEPBX	UEPB2	2.70	22.14	15.25	8.45	3.91			20.35	10.54	13.32	13.32
	Tennessee 2-Way Collierville and Memphis Local Calling Plan (BUS)			UEPBX	UEPB3	2.70	22.14	15.25	8.45	3.91			20.35	10.54	13.32	13.32
	2-Wire voice unbundled Incoming Only Port without Caller ID Capability			UEPBX	UEPBE	2.70	22.14	15.25	8.45	3.91			20.35	10.54	13.32	13.32
FEATURES																
	All Features Offered			UEPBX	UEPVF	0.00	0.00	0.00								
NONRECURRING CHARGES (NRCs) - CURRENTLY COMBINED																
	2-Wire Voice Grade Loop / Line Port Combination - Conversion - Switch-as-is			UEPBX	USAC2		1.03	0.29								
	2-Wire Voice Grade Loop / Line Port Combination - Conversion - Switch with change			UEPBX	USACC		1.03	0.29								
	2-Wire Voice Grade Loop / Line Port Combination - Conversion - Subsequent Database Update						0.76									
ADDITIONAL NRCs																
	2-Wire Voice Grade Loop/Line Port Combination - Subsequent Activity			UEPBX	USAS2	0.00	0.00	0.00								
	Unbundled Miscellaneous Rate Element, Tag Loop at End User Premise			UEPBX	URETL		8.33	0.83								
OFF/ON PREMISES EXTENSION CHANNELS																
	2 Wire Analog Voice Grade Extension Loop – Non-Design		1	UEPBX	UEAEN	13.19	31.99	20.02	10.65	1.41			20.35	10.54	13.32	13.32
	2 Wire Analog Voice Grade Extension Loop – Non-Design		2	UEPBX	UEAEN	17.23	31.99	20.02	10.65	1.41			20.35	10.54	13.32	13.32
	2 Wire Analog Voice Grade Extension Loop – Non-Design		3	UEPBX	UEAEN	22.53	31.99	20.02	10.65	1.41			20.35	10.54	13.32	13.32
	2 Wire Analog Voice Grade Extension Loop – Design		1	UEPBX	UEAED	16.56	75.06	48.20	28.70	17.64			20.35	10.54	13.32	13.32
	2 Wire Analog Voice Grade Extension Loop – Design		2	UEPBX	UEAED	21.63	75.06	48.20	28.70	17.64			20.35	10.54	13.32	13.32
	2 Wire Analog Voice Grade Extension Loop – Design		3	UEPBX	UEAED	28.28	75.06	48.20	28.70	17.64			20.35	10.54	13.32	13.32
INTEROFFICE TRANSPORT																
	Interoffice Transport - Dedicated - 2 Wire Voice Grade - Facility Termination			UEPBX	U1TV2	18.58	55.39	17.37	27.96	3.51						
	Interoffice Transport - Dedicated - 2 Wire Voice Grade - Per Mile or Fraction Mile			UEPBX	U1TVM	0.0174	0.00	0.00								
2-WIRE VOICE GRADE LOOP WITH 2-WIRE LINE PORT (RES - PBX)																
UNE Port/Loop Combination Rates																
	2-Wire VG Loop/Port Combo - Zone 1					15.18										
	2-Wire VG Loop/Port Combo - Zone 2					19.01										
	2-Wire VG Loop/Port Combo - Zone 3					24.02										
UNE Loop Rates																
	2-Wire Voice Grade Loop (SL 1) - Zone 1		1	UEPRG	UEPLX	12.48										
	2-Wire Voice Grade Loop (SL 1) - Zone 2		2	UEPRG	UEPLX	16.31										
	2-Wire Voice Grade Loop (SL 1) - Zone 3		3	UEPRG	UEPLX	21.32										
2-Wire Voice Grade Line Port Rates (RES - PBX)																
	2-Wire VG Unbundled Combination 2-Way PBX Trunk Port - Res			UEPRG	UEPRD	2.70	22.14	15.25	8.45	3.91			20.35	10.54	13.32	13.32
FEATURES																
	All Features Offered			UEPRG	UEPVF	0.00	0.00	0.00								
NONRECURRING CHARGES (NRCs) - CURRENTLY COMBINED																
	2-Wire Voice Grade Loop/ Line Port Combination (PBX) - Conversion - Switch-As-Is			UEPRG	USAC2		1.03	0.29								
	2-Wire Voice Grade Loop/ Line Port Combination (PBX) - Conversion - Switch with Change			UEPRG	USACC		1.03	0.29								
	2-Wire Voice Grade Loop / Line Port Combination - Conversion - Subsequent Database Update						0.76									
ADDITIONAL NRCs																
	2-Wire Voice Grade Loop/ Line Port Combination (PBX) - Subsequent Activity			UEPRG	USAS2	0.00	0.00	0.00								
	PBX Subsequent Activity - Change/Rearrange Multiline Hunt Group						14.64	14.64								
	Unbundled Miscellaneous Rate Element, Tag Loop at End User Premise			UEPRG	URETL		8.33	0.83								
OFF/ON PREMISES EXTENSION CHANNELS																
	Local Channel Voice grade, per termination		1	UEPRG	P2JHX	16.56	75.06	48.20	28.70	17.64			20.35	10.54	13.32	13.32

UNBUNDLED NETWORK ELEMENTS - Tennessee

Attachment: 2 Ex. A

CATEGORY	RATE ELEMENTS	Interim	Zone	BCS	USOC	RATES ($)					Svc Order Submitted Elec per LSR	Svc Order Submitted Manually per LSR	Incremental Charge - Manual Svc Order vs. Electronic-1st	Incremental Charge - Manual Svc Order vs. Electronic-Add'l	Incremental Charge - Manual Svc Order vs. Electronic-Disc 1st	Incremental Charge - Manual Svc Order vs. Electronic-Disc Add'l
						Rec	Nonrecurring		Nonrecurring Disconnect		OSS Rates ($)					
							First	Add'l	First	Add'l	SOMEC	SOMAN	SOMAN	SOMAN	SOMAN	SOMAN
	Local Channel Voice grade, per termination		2	UEPRG	P2JHX	21.63	75.06	48.20	28.70	17.64			20.35	10.54	13.32	13.32
	Local Channel Voice grade, per termination		3	UEPRG	P2JHX	28.28	75.06	48.20	28.70	17.64			20.35	10.54	13.32	13.32
	Non-Wire Direct Serve Channel Voice Grade		SW	UEPRG	SDD2X	10.02	148.84	112.34	73.14	36.65			20.35	10.54	13.32	13.32
INTEROFFICE TRANSPORT																
	Interoffice Transport - Dedicated - 2 Wire Voice Grade - Facility Termination			UEPRG	U1TV2	18.58	55.39	17.37	27.96	3.51						
	Interoffice Transport - Dedicated - 2 Wire Voice Grade - Per Mile or Fraction Mile			UEPRG	U1TVM	0.0174	0.00	0.00								
2-WIRE VOICE GRADE LOOP WITH 2-WIRE LINE PORT (BUS - PBX)																
UNE Port/Loop Combination Rates																
	2-Wire VG Loop/Port Combo - Zone 1					15.18										
	2-Wire VG Loop/Port Combo - Zone 2					19.01										
	2-Wire VG Loop/Port Combo - Zone 3					24.02										
UNE Loop Rates																
	2-Wire Voice Grade Loop (SL 1) - Zone 1		1	UEPPX	UEPLX	12.48										
	2-Wire Voice Grade Loop (SL 1) - Zone 2		2	UEPPX	UEPLX	16.31										
	2-Wire Voice Grade Loop (SL 1) - Zone 3		3	UEPPX	UEPLX	21.32										
2-Wire Voice Grade Line Port Rates (BUS - PBX)																
	Line Side Unbundled Combination 2-Way PBX Trunk Port - Bus			UEPPX	UEPPC	2.70	22.14	15.25	8.45	3.91			20.35	10.54	13.32	13.32
	Line Side Unbundled Outward PBX Trunk Port - Bus			UEPPX	UEPPO	2.70	22.14	15.25	8.45	3.91			20.35	10.54	13.32	13.32
	Line Side Unbundled Incoming PBX Trunk Port - Bus			UEPPX	UEPP1	2.70	22.14	15.25	8.45	3.91			20.35	10.54	13.32	13.32
	2-Wire Voice Unbundled PBX LD Terminal Ports			UEPPX	UEPLD	2.70	22.14	15.25	8.45	3.91			20.35	10.54	13.32	13.32
	2-Wire Voice Unbundled 2-Way Combination PBX Tennessee Calling Port			UEPPX	UEPT2	2.70	22.14	15.25	8.45	3.91			20.35	10.54	13.32	13.32
	2-Wire Voice Unbundled 1-Way Outgoing PBX Tennessee Calling Port			UEPPX	UEPTO	2.70	22.14	15.25	8.45	3.91			20.35	10.54	13.32	13.32
	2-Wire Voice Unbundled 2-Way Combination PBX Usage Port			UEPPX	UEPXA	2.70	22.14	15.25	8.45	3.91			20.35	10.54	13.32	13.32
	2-Wire Voice Unbundled PBX Toll Terminal Hotel Ports			UEPPX	UEPXB	2.70	22.14	15.25	8.45	3.91			20.35	10.54	13.32	13.32
	2-Wire Voice Unbundled PBX LD DDD Terminals Port			UEPPX	UEPXC	2.70	22.14	15.25	8.45	3.91			20.35	10.54	13.32	13.32
	2-Wire Voice Unbundled PBX LD Terminal Switchboard Port			UEPPX	UEPXD	2.70	22.14	15.25	8.45	3.91			20.35	10.54	13.32	13.32
	2-Wire Voice Unbundled PBX LD Terminal Switchboard IDD Capable Port			UEPPX	UEPXE	2.70	22.14	15.25	8.45	3.91			20.35	10.54	13.32	13.32
	2-Wire Voice Unbundled 2-Way PBX Hotel/Hospital Economy Administrative Calling Port			UEPPX	UEPXL	2.70	22.14	15.25	8.45	3.91			20.35	10.54	13.32	13.32
	2-Wire Voice Unbundled 2-Way PBX Hotel/Hospital Economy Room Calling Port			UEPPX	UEPXM	2.70	22.14	15.25	8.45	3.91			20.35	10.54	13.32	13.32
	2-Wire Voice Unbundled 1W Out PBX Hotel/Hospital Economy Administrative Calling Port TN Calling Port			UEPPX	UEPXN	2.70	22.14	15.25	8.45	3.91			20.35	10.54	13.32	13.32
	2-Wire Voice Unbundled 1-Way Outgoing PBX Hotel/Hospital Discount Room Calling Port			UEPPX	UEPXO	2.70	22.14	15.25	8.45	3.91			20.35	10.54	13.32	13.32
	2-Wire Voice Unbundled 1-Way Outgoing PBX Measured Port			UEPPX	UEPXS	2.70	22.14	15.25	8.45	3.91			20.35	10.54	13.32	13.32
	2-Wire Voice Unbundled PBX Collierville and Memphis Calling Port			UEPPX	UEPXU	2.70	22.14	15.25	8.45	3.91			20.35	10.54	13.32	13.32
	2-Wire Voice Unbundled 2-Way PBX Tennessee RegionServ Callling Port			UEPPX	UEPXV	2.70	22.14	15.25	8.45	3.91			20.35	10.54	13.32	13.32
	Tennessee PBX 2-Way Combo Each Additional Trunk Collierville and Memphis Local Calling Plan			UEPPX	UEPA6	2.70	22.14	15.25	8.45	3.91			20.35	10.54	13.32	13.32
	Tennessee PBX 2-Way Combo First Trunk Collierville and Memphis Local Calling Plan			UEPPX	UEPA7	2.70	22.14	15.25	8.45	3.91			20.35	10.54	13.32	13.32
FEATURES																
	All Features Offered			UEPPX	UEPVF	0.00	0.00	0.00								
NONRECURRING CHARGES (NRCs) - CURRENTLY COMBINED																
	2-Wire Voice Grade Loop/ Line Port Combination (PBX) - Conversion - Switch-As-Is			UEPPX	USAC2		1.03	0.29								
	2-Wire Voice Grade Loop/ Line Port Combination (PBX) - Conversion - Switch with Change			UEPPX	USACC		1.03	0.29								
	2-Wire Voice Grade Loop / Line Port Combination - Conversion - Subsequent Database Update						0.76									
ADDITIONAL NRCs																
	2-Wire Voice Grade Loop/ Line Port Combination (PBX) - Subsequent Activity			UEPPX	USAS2	0.00	0.00	0.00								
	PBX Subsequent Activity - Change/Rearrange Multiline Hunt Group						14.64	14.64								

UNBUNDLED NETWORK ELEMENTS - Tennessee

Attachment: 2 Ex. A

CATEGORY	RATE ELEMENTS	Interim	Zone	BCS	USOC	RATES ($)					Svc Order Submitted Elec per LSR	Svc Order Submitted Manually per LSR	Incremental Charge - Manual Svc Order vs. Electronic-1st	Incremental Charge - Manual Svc Order vs. Electronic-Add'l	Incremental Charge - Manual Svc Order vs. Electronic-Disc 1st	Incremental Charge - Manual Svc Order vs. Electronic-Disc Add'l
						Rec	Nonrecurring		Nonrecurring Disconnect		OSS Rates ($)					
							First	Add'l	First	Add'l	SOMEC	SOMAN	SOMAN	SOMAN	SOMAN	SOMAN
	Unbundled Miscellaneous Rate Element, Tag Loop at End User Premise			UEPPX	URETL		8.33	0.83					20.35	10.54	13.32	13.32
	OFF/ON PREMISES EXTENSION CHANNELS															
	Local Channel Voice grade, per termination		1	UEPPX	P2JHX	16.56	75.06	48.20	28.70	17.64			20.35	10.54	13.32	13.32
	Local Channel Voice grade, per termination		2	UEPPX	P2JHX	21.63	75.06	48.20	28.70	17.64			20.35	10.54	13.32	13.32
	Local Channel Voice grade, per termination		3	UEPPX	P2JHX	28.28	75.06	48.20	28.70	17.64			20.35	10.54	13.32	13.32
	Non-Wire Direct Serve Channel Voice Grade		SW	UEPPX	SDD2X	10.02	148.84	112.34	73.14	36.65			20.35	10.54	13.32	13.32
	INTEROFFICE TRANSPORT															
	Interoffice Transport - Dedicated - 2 Wire Voice Grade - Facility Termination			UEPPX	U1TV2	18.58	55.39	17.37	27.96	3.51						
	Interoffice Transport - Dedicated - 2 Wire Voice Grade - Per Mile or Fraction Mile			UEPPX	U1TVM	0.0174	0.00	0.00								
	2-WIRE VOICE GRADE LOOP WITH 2-WIRE LINE PORT (COIN)															
	UNE Port/Loop Combination Rates															
	2-Wire VG Coin Port/Loop Combo – Zone 1					15.18										
	2-Wire VG Coin Port/Loop Combo – Zone 2					19.01										
	2-Wire VG Coin Port/Loop Combo – Zone 3					24.02										
	UNE Loop Rates															
	2-Wire Voice Grade Loop (SL1) - Zone 1		1	UEPCO	UEPLX	12.48										
	2-Wire Voice Grade Loop (SL1) - Zone 2		2	UEPCO	UEPLX	16.31										
	2-Wire Voice Grade Loop (SL1) - Zone 3		3	UEPCO	UEPLX	21.32										
	2-Wire Voice Grade Line Ports (COIN)															
	2-Wire Coin 2-Way without Operator Screening and without Blocking (TN)			UEPCO	UEPTB	2.70	22.14	15.25	8.45	3.91			20.35	10.54	13.32	13.32
	2-Wire Coin 2-Way with Operator Screening and Blocking: 011, 900/976, 1+DDD (NC, TN)			UEPCO	UEPRP	2.70	22.14	15.25	8.45	3.91			20.35	10.54	13.32	13.32
	2-Wire Coin 2-Way with Operator Screening and 011 Blocking (TN)			UEPCO	UEPTA	2.70	22.14	15.25	8.45	3.91			20.35	10.54	13.32	13.32
	2-Wire Coin 2-Way with Operator Screening: 900 Blocking: 900/976, 1+DDD, 011+, and Local (NC, TN)			UEPCO	UEPCA	2.70	22.14	15.25	8.45	3.91			20.35	10.54	13.32	13.32
	2-Wire Coin Outward with Operator Screening and 011 Blocking (TN)			UEPCO	UEPTC	2.70	22.14	15.25	8.45	3.91			20.35	10.54	13.32	13.32
	2-Wire Coin Outward with Operator Screening and Blocking: 900/976, 1+DDD, 011+, and Local (TN)			UEPCO	UEPOT	2.70	22.14	15.25	8.45	3.91			20.35	10.54	13.32	13.32
	2-Wire 2-Way Smartline with 900/976 (all states except LA)			UEPCO	UEPCK	2.88							20.35	10.54	13.32	13.32
	2-Wire Coin Outward Smartline with 900/976 (all states except LA)			UEPCO	UEPCR	2.88							20.35	10.54	13.32	13.32
	ADDITIONAL UNE COIN PORT/LOOP (RC)															
	UNE Coin Port/Loop Combo Usage (Flat Rate)			UEPCO	URECU	3.45	0.00	0.00	0.00	0.00						
	2-Wire Voice Grade Loop / Line Port Combination - Conversion - Switch-as-is			UEPCO	USAC2		1.03	0.29								
	2-Wire Voice Grade Loop / Line Port Combination - Conversion - Switch with change			UEPCO	USACC		1.03	0.29								
	2-Wire Voice Grade Loop/Line Port Combination - Subsequent Activity			UEPCO	USAS2	0.00	0.00	0.00								
	Unbundled Miscellaneous Rate Element, Tag Loop at End User Premise			UEPCO	URETL		8.33	0.83								
	2-WIRE VOICE LOOP/ 2WIRE VOICE GRADE IO TRANSPORT/ 2-WIRE LINE PORT (RES)															
	UNE Port/Loop Combination Rates															
	2-Wire VG Loop/IO Tranport/Port Combo - Zone 1					19.45										
	2-Wire VG Loop/IO Tranport/Port Combo - Zone 2					24.52										
	2-Wire VG Loop/IO Tranport/Port Combo - Zone 3					31.17										
	UNE Loop Rates															
	2-Wire Voice Grade Loop (SL2) - Zone 1		1	UEPFR	UECF2	16.56										
	2-Wire Voice Grade Loop (SL2) - Zone 2		2	UEPFR	UECF2	21.63										
	2-Wire Voice Grade Loop (SL2) - Zone 3		3	UEPFR	UECF2	28.28										
	2-Wire Voice Grade Line Port Rates (Res)															
	2-Wire voice unbundled port - residence			UEPFR	UEPRL	2.89	84.99	57.39	32.36	20.56			20.35	10.54	13.32	13.32
	2-Wire voice unbundled port with Caller ID - res			UEPFR	UEPRC	2.89	84.99	57.39	32.36	20.56			20.35	10.54	13.32	13.32
	2-Wire voice unbundled port outgoing only - res			UEPFR	UEPRO	2.89	84.99	57.39	32.36	20.56			20.35	10.54	13.32	13.32
	2-Wire voice Grade unbundled Tennessee extended local dialing parity port with Caller ID - res			UEPFR	UEPAQ	2.89	84.99	57.39	32.36	20.56			20.35	10.54	13.32	13.32
	2-Wire voice unbundled Tennessee Area Plus with Caller ID - res (AC7)			UEPFR	UEPAH	2.89	84.99	57.39	32.36	20.56			20.35	10.54	13.32	13.32

CATEGORY	RATE ELEMENTS	Interim	Zone	BCS	USOC	RATES ($)					Svc Order Submitted Elec per LSR	Svc Order Submitted Manually per LSR	Incremental Charge - Manual Svc Order vs. Electronic-1st	Incremental Charge - Manual Svc Order vs. Electronic-Add'l	Incremental Charge - Manual Svc Order vs. Electronic-Disc 1st	Incremental Charge - Manual Svc Order vs. Electronic-Disc Add'l
						Rec	Nonrecurring		Nonrecurring Disconnect		OSS Rates ($)					
							First	Add'l	First	Add'l	SOMEC	SOMAN	SOMAN	SOMAN	SOMAN	SOMAN
	2-Wire voice unbundled Tennessee Area Calling port with Caller ID - res (F2R)			UEPFR	UEPAK	2.89	84.99	57.39	32.36	20.56			20.35	10.54	13.32	13.32
	2-Wire voice unbundled Tennessee Area Calling port with Caller ID - res (TACER)			UEPFR	UEPAL	2.89	84.99	57.39	32.36	20.56			20.35	10.54	13.32	13.32
	2-Wire voice unbundled Tennessee Area Calling port with Caller ID - res (TACSR)			UEPFR	UEPAM	2.89	84.99	57.39	32.36	20.56			20.35	10.54	13.32	13.32
	2-Wire voice unbundled Tennessee Area Calling port with Caller ID - res (1MF2X)			UEPFR	UEPAN	2.89	84.99	57.39	32.36	20.56			20.35	10.54	13.32	13.32
	2-Wire voice unbundled Tennessee Area Calling port with Caller ID - res (2MR)			UEPFR	UEPAO	2.89	84.99	57.39	32.36	20.56			20.35	10.54	13.32	13.32
	2-Wire voice unbundles res, low usage line port with Caller ID (LUM)			UEPFR	UEPAP	2.89	84.99	57.39	32.36	20.56			20.35	10.54	13.32	13.32
	2-Wire Voice Unbundled Tennessee Residence Dialing Plan without Caller ID			UEPFR	UEPWN	2.89	84.99	57.39	32.36	20.56			20.35	10.54	13.32	13.32
INTEROFFICE TRANSPORT																
	Interoffice Transport - Dedicated - 2 Wire Voice Grade - Facility Termination			UEPFR	U1TV2	18.58	55.39	17.37	27.96	3.51						
	Interoffice Transport - Dedicated - 2 Wire Voice Grade - Per Mile or Fraction Mile			UEPFR	1L5XX	0.0174										
FEATURES																
	All Features Offered			UEPFR	UEPVF	0.00	0.00	0.00								
NONRECURRING CHARGES (NRCs) - CURRENTLY COMBINED																
	2-Wire Loop / Dedicated IO Transport / 2 Wire Line Port Combination - Conversion - Switch-as-is			UEPFR	USAC2		16.94	3.72								
	2-Wire Loop / Dedicated IO Transport / 2 Wire Line Port Combination - Conversion - Switch-With-Change			UEPFR	USACC		16.94	3.72								
	Unbundled Miscellaneous Rate Element, Tag Designed Loop at End User Premise			UEPFR	URETN		11.23	1.10								
2-WIRE VOICE LOOP/ 2WIRE VOICE GRADE IO TRANSPORT/ 2-WIRE LINE PORT (BUS)																
UNE Port/Loop Combination Rates																
	2-Wire VG Loop/IO Tranport/Port Combo - Zone 1					19.45										
	2-Wire VG Loop/IO Tranport/Port Combo - Zone 2					24.52										
	2-Wire VG Loop/IO Tranport/Port Combo - Zone 3					31.17										
UNE Loop Rates																
	2-Wire Voice Grade Loop (SL2) - Zone 1		1	UEPFB	UECF2	16.56										
	2-Wire Voice Grade Loop (SL2) - Zone 2		2	UEPFB	UECF2	21.63										
	2-Wire Voice Grade Loop (SL2) - Zone 3		3	UEPFB	UECF2	28.28										
2-Wire Voice Grade Line Port (Bus)																
	2-Wire voice unbundled port without Caller ID - bus			UEPFB	UEPBL	2.89	84.99	57.39	32.36	20.56			20.35	10.54	13.32	13.32
	2-Wire voice unbundled port with Caller + E484 ID - bus			UEPFB	UEPBC	2.89	84.99	57.39	32.36	20.56			20.35	10.54	13.32	13.32
	2-Wire voice unbundled port outgoing only - bus			UEPFB	UEPBO	2.89	84.99	57.39	32.36	20.56			20.35	10.54	13.32	13.32
	2-Wire voice Grade unbundled Tennessee extended local dialing parity port with Caller ID - bus			UEPFB	UEPAV	2.89	84.99	57.39	32.36	20.56			20.35	10.54	13.32	13.32
	2-Wire voice unbundled incoming only port with Caller ID - Bus			UEPFB	UEPB1	2.89	84.99	57.39	32.36	20.56			20.35	10.54	13.32	13.32
	2-Wire voice unbundled Tennessee Bus 2-Way Area Calling Port Economy Option (TACC1)			UEPFB	UEPAC	2.89	84.99	57.39	32.36	20.56			20.35	10.54	13.32	13.32
	2-Wire voice unbundled Tennessee Bus 2-Way Area Calling Port Standard Option (TACC2)			UEPFB	UEPAD	2.89	84.99	57.39	32.36	20.56			20.35	10.54	13.32	13.32
	2-Wire voice unbundled Tennessee Bus 2-Way Collierville and Memphis Local Calling Port (B2F)			UEPFB	UEPAE	2.89	84.99	57.39	32.36	20.56			20.35	10.54	13.32	13.32
	2-Wire Voice Unbundled Tennessee Business Dialing Plan without Caller ID			UEPFB	UEPWO	2.89	84.99	57.39	32.36	20.56			20.35	10.54	13.32	13.32
	Tennessee Inward Collierville and Memphis Local Calling Plan (BUS)			UEPFB	UEPB2	2.89	84.99	57.39	32.36	20.56			20.35	10.54	13.32	13.32
	Tennessee 2-Way Collierville and Memphis Local Calling Plan (BUS)			UEPFB	UEPB3	2.89	84.99	57.39	32.36	20.56			20.35	10.54	13.32	13.32
INTEROFFICE TRANSPORT																
	Interoffice Transport - Dedicated - 2 Wire Voice Grade - Facility Termination			UEPFB	U1TV2	18.58	55.39	17.37	27.96	3.51						
	Interoffice Transport - Dedicated - 2 Wire Voice Grade - Per Mile or Fraction Mile			UEPFB	1L5XX	0.0174										
FEATURES																
	All Features Offered			UEPFB	UEPVF	0.00	0.00	0.00								
NONRECURRING CHARGES (NRCs) - CURRENTLY COMBINED																

UNBUNDLED NETWORK ELEMENTS - Tennessee

Attachment: 2 Ex. A

CATEGORY	RATE ELEMENTS	Interim	Zone	BCS	USOC	RATES ($) Rec	Nonrecurring First	Nonrecurring Add'l	Nonrecurring Disconnect First	Nonrecurring Disconnect Add'l	Svc Order Submitted Elec per LSR	Svc Order Submitted Manually per LSR	Incremental Charge - Manual Svc Order vs. Electronic-1st	Incremental Charge - Manual Svc Order vs. Electronic-Add'l	Incremental Charge - Manual Svc Order vs. Electronic-Disc 1st	Incremental Charge - Manual Svc Order vs. Electronic-Disc Add'l
											OSS Rates ($)					
											SOMEC	SOMAN	SOMAN	SOMAN	SOMAN	SOMAN
	2-Wire Loop / Dedicated IO Transport / 2 Wire Line Port Combination - Conversion - Switch-as-is			UEPFB	USAC2		16.94	3.72								
	2-Wire Loop / Dedicated IO Transport / 2 Wire Line Port Combination - Conversion - Switch with change			UEPFB	USACC		16.94	3.72								
	Unbundled Miscellaneous Rate Element, Tag Designed Loop at End User Premise			UEPFB	URETN		11.23	1.10								
2-WIRE VOICE LOOP/ 2WIRE VOICE GRADE IO TRANSPORT/ 2-WIRE LINE PORT (PBX)																
UNE Port/Loop Combination Rates																
	2-Wire VG Loop/IO Tranport/Port Combo - Zone 1					19.45										
	2-Wire VG Loop/IO Tranport/Port Combo - Zone 2					24.52										
	2-Wire VG Loop/IO Tranport/Port Combo - Zone 3					31.17										
UNE Loop Rates																
	2-Wire Voice Grade Loop (SL2) - Zone 1		1	UEPFP	UECF2	16.56										
	2-Wire Voice Grade Loop (SL2) - Zone 2		2	UEPFP	UECF2	21.63										
	2-Wire Voice Grade Loop (SL2) - Zone 3		3	UEPFP	UECF2	28.28										
2-Wire Voice Grade Line Port Rates (BUS - PBX)																
	Line Side Unbundled Combination 2-Way PBX Trunk Port - Bus			UEPFP	UEPPC	2.79	106.40	63.08	42.67	18.54			20.35	10.54	13.32	13.32
	Line Side Unbundled Outward PBX Trunk Port - Bus			UEPFP	UEPPO	2.79	106.40	63.08	42.67	18.54			20.35	10.54	13.32	13.32
	Line Side Unbundled Incoming PBX Trunk Port - Bus			UEPFP	UEPP1	2.79	106.40	63.08	42.67	18.54			20.35	10.54	13.32	13.32
	2-Wire Voice Unbundled PBX LD Terminal Ports			UEPFP	UEPLD	2.79	106.40	63.08	42.67	18.54			20.35	10.54	13.32	13.32
	2-Wire Voice Unbundled 2-Way Combination PBX Tennessee Calling Port			UEPFP	UEPT2	2.79	106.40	63.08	42.67	18.54			20.35	10.54	13.32	13.32
	2-Wire Voice Unbundled 1-Way Outgoing PBX Tennessee Calling Port			UEPFP	UEPTO	2.79	106.40	63.08	42.67	18.54			20.35	10.54	13.32	13.32
	2-Wire Voice Unbundled 2-Way Combination PBX Usage Port			UEPFP	UEPXA	2.79	106.40	63.08	42.67	18.54			20.35	10.54	13.32	13.32
	2-Wire Voice Unbundled PBX Toll Terminal Hotel Ports			UEPFP	UEPXB	2.79	106.40	63.08	42.67	18.54			20.35	10.54	13.32	13.32
	2-Wire Voice Unbundled PBX LD DDD Terminals Port			UEPFP	UEPXC	2.79	106.40	63.08	42.67	18.54			20.35	10.54	13.32	13.32
	2-Wire Voice Unbundled PBX LD Terminal Switchboard Port			UEPFP	UEPXD	2.79	106.40	63.08	42.67	18.54			20.35	10.54	13.32	13.32
	2-Wire Voice Unbundled PBX LD Terminal Switchboard IDD Capable Port			UEPFP	UEPXE	2.79	106.40	63.08	42.67	18.54			20.35	10.54	13.32	13.32
	2-Wire Voice Unbundled 2-Way PBX Hotel/Hospital Economy Administrative Calling Port			UEPFP	UEPXL	2.79	106.40	63.08	42.67	18.54			20.35	10.54	13.32	13.32
	2-Wire Voice Unbundled 2-Way PBX Hotel/Hospital Economy Room Calling Port			UEPFP	UEPXM	2.79	106.40	63.08	42.67	18.54			20.35	10.54	13.32	13.32
	2-Wire Voice Unbundled 1W Out PBX Hotel/Hospital Economy Administrative Calling Port TN Calling Port			UEPFP	UEPXN	2.79	106.40	63.08	42.67	18.54			20.35	10.54	13.32	13.32
	2-Wire Voice Unbundled 1-Way Outgoing PBX Hotel/Hospital Discount Room Calling Port			UEPFP	UEPXO	2.79	106.40	63.08	42.67	18.54			20.35	10.54	13.32	13.32
	2-Wire Voice Unbundled 1-Way Outgoing PBX Measured Port			UEPFP	UEPXS	2.79	106.40	63.08	42.67	18.54			20.35	10.54	13.32	13.32
	2-Wire Voice Unbundled PBX Collierville and Memphis Calling Port			UEPFP	UEPXU	2.79	106.40	63.08	42.67	18.54			20.35	10.54	13.32	13.32
	2-Wire Voice Unbundled 2-Way PBX Tennessee RegionServ Callling Port			UEPFP	UEPXV	2.79	106.40	63.08	42.67	18.54			20.35	10.54	13.32	13.32
INTEROFFICE TRANSPORT																
	Interoffice Transport - Dedicated - 2 Wire Voice Grade - Facility Termination			UEPFP	U1TV2	18.58	55.39	17.37	27.96	3.51						
	Interoffice Transport - Dedicated - 2 Wire Voice Grade - Per Mile or Fraction Mile			UEPFP	1L5XX	0.0174										
FEATURES																
	All Features Offered			UEPFP	UEPVF	0.00	0.00	0.00								
NONRECURRING CHARGES (NRCs) - CURRENTLY COMBINED																
	2-Wire Loop / Dedicated IO Transport / 2 Wire Line Port Combination - Conversion - Switch-as-is			UEPFP	USAC2		16.94	3.72								
	2-Wire Loop / Dedicated IO Transport / 2 Wire Line Port Combination - Conversion - Switch with change			UEPFP	USACC		16.94	3.72								
	Unbundled Miscellaneous Rate Element, Tag Designed Loop at End User Premise			UEPFP	URETN		11.23	1.10								
2-WIRE VOICE GRADE LOOP- BUS ONLY - WITH 2-WIRE DID TRUNK PORT																
UNE Port/Loop Combination Rates																
	2-Wire VG Loop/2-Wire DID Trunk Port Combo - UNE Zone 1					19.38										
	2-Wire VG Loop/2-Wire DID Trunk Port Combo - UNE Zone 2					20.87										
	2-Wire VG Loop/2-Wire DID Trunk Port Combo - UNE Zone 3					25.78										
UNE Loop Rates																

UNBUNDLED NETWORK ELEMENTS - Tennessee

Attachment: 2 Ex. A

CATEGORY	RATE ELEMENTS	Interim	Zone	BCS	USOC	RATES ($) Rec	Nonrecurring First	Nonrecurring Add'l	Nonrecurring Disconnect First	Nonrecurring Disconnect Add'l	Svc Order Submitted Elec per LSR	Svc Order Submitted Manually per LSR	Incremental Charge - Manual Svc Order vs. Electronic-1st	Incremental Charge - Manual Svc Order vs. Electronic-Add'l	Incremental Charge - Manual Svc Order vs. Electronic-Disc 1st	Incremental Charge - Manual Svc Order vs. Electronic-Disc Add'l
											OSS Rates ($)					
							First	Add'l	First	Add'l	SOMEC	SOMAN	SOMAN	SOMAN	SOMAN	SOMAN
	2-Wire Analog Voice Grade Loop - (SL2) - UNE Zone 1		1	UEPPX	UECD1	9.60										
	2-Wire Analog Voice Grade Loop - (SL2) - UNE Zone 2		2	UEPPX	UECD1	11.09										
	2-Wire Analog Voice Grade Loop - (SL2) - UNE Zone 3		3	UEPPX	UECD1	16.00										
UNE Port Rate																
	Exchange Ports - 2-Wire DID Port			UEPPX	UEPD1	9.78	45.44	29.94	8.45	3.91			30.89	7.03		
NONRECURRING CHARGES - CURRENTLY COMBINED																
	2-Wire Voice Grade Loop / 2-Wire DID Trunk Port Combination - Switch-as-is			UEPPX	USAC1		8.76	5.75								
	2-Wire Voice Grade Loop / 2-Wire DID Trunk Port Conversion with BellSouth Allowable Changes			UEPPX	USA1C		8.76	5.75								
	Unbundled Miscellaneous Rate Element, Tag Designed Loop at End User Premise			UEPPX	URETN		11.23	1.10								
Telephone Number/Trunk Group Establisment Charges																
	DID Trunk Termination (One Per Port)			UEPPX	NDT	0.00	0.00	0.00								
	Additional DID Numbers for each Group of 20 DID Numbers			UEPPX	ND4	0.00	0.00	0.00								
	DID Numbers, Non- consecutive DID Numbers , Per Number			UEPPX	ND5	0.00	0.00	0.00								
	Reserve Non-Consecutive DID numbers			UEPPX	ND6	0.00	0.00	0.00								
	Reserve DID Numbers			UEPPX	NDV	0.00	0.00	0.00								
2-WIRE ISDN DIGITAL GRADE LOOP WITH 2-WIRE ISDN DIGITAL LINE SIDE PORT																
UNE Port/Loop Combination Rates																
	2W ISDN Digital Grade Loop/2W ISDN Digital Line Side Port - UNE Zone 1					33.27										
	2W ISDN Digital Grade Loop/2W ISDN Digital Line Side Port - UNE Zone 2					35.78										
	2W ISDN Digital Grade Loop/2W ISDN Digital Line Side Port - UNE Zone 3					45.32										
UNE Loop Rates																
	2-Wire ISDN Digital Grade Loop - UNE Zone 1		1	UEPPB UEPPR	USL2X	16.20										
	2-Wire ISDN Digital Grade Loop - UNE Zone 2		2	UEPPB UEPPR	USL2X	18.71										
	2-Wire ISDN Digital Grade Loop - UNE Zone 3		3	UEPPB UEPPR	USL2X	28.25										
UNE Port Rate																
	Exchange Port - 2-Wire ISDN Line Side Port			UEPPR	UEPPR	17.07	141.75	118.37	49.20	43.26			19.99	19.99		
	Exchange Port - 2-Wire ISDN Line Side Port			UEPPB	UEPPB	17.07	141.75	118.37	49.20	43.26			19.99	19.99		
NONRECURRING CHARGES - CURRENTLY COMBINED																
	2-Wire ISDN Digital Grade Loop / 2-Wire ISDN Line Side Port Combination - Conversion			UEPPB UEPPR	USACB	0.00	117.23	117.23					19.99	19.99		
ADDITIONAL NRCs																
	2-Wire ISDN Loop / 2-Wire ISDN Port Combination - Sub Actvy - Non Feature/Add Trunk			UEPPB UEPPR	USASB		212.88						19.99	19.99		
	Unbundled Miscellaneous Rate Element, Tag Designed Loop at End User Premise			UEPPB UEPPR	URETN		11.23	1.10								
	Unbundled Miscellaneous Rate Element, Tag Loop at End User Premise			UEPPB UEPPR	URETL		8.33	0.83								
B-CHANNEL USER PROFILE ACCESS:																
	CVS/CSD (DMS/5ESS)			UEPPB UEPPR	U1UCA	0.00	0.00	0.00								
	CVS (EWSD)			UEPPB UEPPR	U1UCB	0.00	0.00	0.00								
	CSD			UEPPB UEPPR	U1UCC	0.00	0.00	0.00								
B-CHANNEL AREA PLUS USER PROFILE ACCESS: (AL,KY,LA,MS SC,MS, & TN)																
	CVS/CSD (DMS/5ESS)			UEPPB UEPPR	U1UCD	0.00	0.00	0.00								
	CVS (EWSD)			UEPPB UEPPR	U1UCE	0.00	0.00	0.00								
	CSD			UEPPB UEPPR	U1UCF	0.00	0.00	0.00								
USER TERMINAL PROFILE																
	User Terminal Profile (EWSD only)			UEPPB UEPPR	U1UMA	0.00	0.00	0.00								
VERTICAL FEATURES																
	All Vertical Features - One per Channel B User Profile			UEPPB UEPPR	UEPVF	0.00	0.00	0.00								
INTEROFFICE CHANNEL MILEAGE																
	Interoffice Channel mileage each, including first mile and facilities termination			UEPPB UEPPR	M1GNC	17.91	53.99	17.37					19.99	19.99		
	Interoffice Channel mileage each, additional mile			UEPPB UEPPR	M1GNM	0.173	0.00	0.00								
UNBUNDLED CENTREX PORT/LOOP COMBINATIONS - COST BASED RATES																
UNE-P CENTREX - 1AESS - (Valid in AL,FL,GA,KY,LA,MS,&TN only)																
2-Wire VG Loop/2-Wire Voice Grade Port (Centrex) Combo																
UNE Port/Loop Combination Rates (Non-Design)																

CATEGORY	RATE ELEMENTS	Interim	Zone	BCS	USOC	RATES ($)					Svc Order Submitted Elec per LSR	Svc Order Submitted Manually per LSR	Incremental Charge - Manual Svc Order vs. Electronic-1st	Incremental Charge - Manual Svc Order vs. Electronic-Add'l	Incremental Charge - Manual Svc Order vs. Electronic-Disc 1st	Incremental Charge - Manual Svc Order vs. Electronic-Disc Add'l
						Rec	Nonrecurring		Nonrecurring Disconnect		OSS Rates ($)					
							First	Add'l	First	Add'l	SOMEC	SOMAN	SOMAN	SOMAN	SOMAN	SOMAN
	2-Wire VG Loop/2-Wire Voice Grade Port (Centrex) Port Combo - Non-Design					15.18										
	2-Wire VG Loop/2-Wire Voice Grade Port (Centrex)Port Combo - Non-Design					19.01										
	2-Wire VG Loop/2-Wire Voice Grade Port (Centrex)Port Combo - Non-Design					24.02										
UNE Port/Loop Combination Rates (Design)																
	2-Wire VG Loop/2-Wire Voice Grade Port (Centrex) Port Combo - Design					19.26										
	2-Wire VG Loop/2-Wire Voice Grade Port (Centrex)Port Combo - Design					24.33										
	2-Wire VG Loop/2-Wire Voice Grade Port (Centrex)Port Combo - Design					30.98										
UNE Loop Rate																
	2-Wire Voice Grade Loop (SL 1) - Zone 1		1	UEP91	UECS1	12.48										
	2-Wire Voice Grade Loop (SL 1) - Zone 2		2	UEP91	UECS1	16.31										
	2-Wire Voice Grade Loop (SL 1) - Zone 3		3	UEP91	UECS1	21.32										
	2-Wire Voice Grade Loop (SL 2) - Zone 1		1	UEP91	UECS2	16.56										
	2-Wire Voice Grade Loop (SL 2) - Zone 2		2	UEP91	UECS2	21.63										
	2-Wire Voice Grade Loop (SL 2) - Zone 3		3	UEP91	UECS2	28.28										
UNE Ports																
All States (Except North Carolina and Sout Carolina)																
	2-Wire Voice Grade Port (Centrex) Basic Local Area			UEP91	UEPYA	2.70	22.14	15.25	8.45	3.91			**30.89**	**7.03**		
	2-Wire Voice Grade Port (Centrex 800 termination)Basic Local Area			UEP91	UEPYB	2.70	22.14	15.25	8.45	3.91			**30.89**	**7.03**		
	2-Wire Voice Grade Port (Centrex with Caller ID)Note1 Basic Local Area			UEP91	UEPYH	2.70	22.14	15.25	8.45	3.91			**30.89**	**7.03**		
	2-Wire Voice Grade Port (Centrex from diff Serving Wire Center) Note 2, 3 Basic Local Area			UEP91	UEPYM	2.70	22.14	15.25	8.45	3.91			**30.89**	**7.03**		
	2-Wire Voice Grade Port, Diff Serving Wire Center - 800 Service Term - Basic Local Area			UEP91	UEPYZ	2.70	22.14	15.25	8.45	3.91			**30.89**	**7.03**		
	2-Wire Voice Grade Port terminated in on Megalink or equivalent - Basic Local Area			UEP91	UEPY9	2.70	22.14	15.25	8.45	3.91			**30.89**	**7.03**		
	2-Wire Voice Grade Port Terminated on 800 Service Term - Basic Local Area			UEP91	UEPY2	2.70	22.14	15.25	8.45	3.91			**30.89**	**7.03**		
AL, KY, LA, MS, & TN Only																
	2-Wire Voice Grade Port (Centrex)			UEP91	UEPQA	2.70	22.14	15.25	8.45	3.91			**30.89**	**7.03**		
	2-Wire Voice Grade Port (Centrex 800 termination)			UEP91	UEPQB	2.70	22.14	15.25	8.45	3.91			**30.89**	**7.03**		
	2-Wire Voice Grade Port (Centrex with Caller ID)1			UEP91	UEPQH	2.70	22.14	15.25	8.45	3.91			**30.89**	**7.03**		
	2-Wire Voice Grade Port (Centrex from diff Serving Wire Center)2,3			UEP91	UEPQM	2.70	22.14	15.25	8.45	3.91			**30.89**	**7.03**		
	2-Wire Voice Grade Port, Diff Serving Wire Center - 2,3 - 800 Service Term			UEP91	UEPQZ	2.70	22.14	15.25	8.45	3.91			**30.89**	**7.03**		
	2-Wire Voice Grade Port terminated in on Megalink or equivalent			UEP91	UEPQ9	2.70	22.14	15.25	8.45	3.91			**30.89**	**7.03**		
	2-Wire Voice Grade Port Terminated on 800 Service Term			UEP91	UEPQ2	2.70	22.14	15.25	8.45	3.91			**30.89**	**7.03**		
Local Switching																
	Centrex Intercom Funtionality, per port			UEP91	URECS	0.6381										
Features																
	All Standard Features Offered, per port			UEP91	UEPVF	0.00							**30.89**	**7.03**		
	All Select Features Offered, per port			UEP91	UEPVS	0.00	433.78						**30.89**	**7.03**		
	All Centrex Control Features Offered, per port			UEP91	UEPVC	0.00							**30.89**	**7.03**		
NARS																
	Unbundled Network Access Register - Combination			UEP91	UARCX	0.00	0.00	0.00	0.00	0.00			**30.89**	**7.03**		
	Unbundled Network Access Register - Indial			UEP91	UAR1X	0.00	0.00	0.00	0.00	0.00			**30.89**	**7.03**		
	Unbundled Network Access Register - Outdial			UEP91	UAROX	0.00	0.00	0.00	0.00	0.00			**30.89**	**7.03**		
Miscellaneous Terminations																
2-Wire Trunk Side																
	Trunk Side Terminations, each			UEP91	CENA6	8.78	22.14	15.25	8.45	3.91			**30.89**	**7.03**		
Interoffice Channel Mileage - 2-Wire																
	Interoffice Channel Facilities Termination - Voice Grade			UEP91	M1GBC	18.58	22.14	15.25	8.45	3.91			**30.89**	**7.03**		
	Interoffice Channel mileage, per mile or fraction of mile			UEP91	M1GBM	0.0174										
Feature Activations (DS0) Centrex Loops on Channelized DS1 Service																
D4 Channel Bank Feature Activations																

CATEGORY	RATE ELEMENTS	Interim	Zone	BCS	USOC	RATES ($) Rec	Nonrecurring First	Nonrecurring Add'l	Nonrecurring Disconnect First	Nonrecurring Disconnect Add'l	Svc Order Submitted Elec per LSR	Svc Order Submitted Manually per LSR	Incremental Charge - Manual Svc Order vs. Electronic-1st	Incremental Charge - Manual Svc Order vs. Electronic-Add'l	Incremental Charge - Manual Svc Order vs. Electronic-Disc 1st	Incremental Charge - Manual Svc Order vs. Electronic-Disc Add'l
											OSS Rates ($)					
							First	Add'l	First	Add'l	SOMEC	SOMAN	SOMAN	SOMAN	SOMAN	SOMAN
	Feature Activation on D-4 Channel Bank Centrex Loop Slot			UEP91	1PQWS	0.66										
	Feature Activation on D-4 Channel Bank FX line Side Loop Slot			UEP91	1PQW6	0.66										
	Feature Activation on D-4 Channel Bank FX Trunk Side Loop Slot			UEP91	1PQW7	0.66										
	Feature Activation on D-4 Channel Bank Centrex Loop Slot - Different Wire Center			UEP91	1PQWP	0.66										
	Feature Activation on D-4 Channel Bank Private Line Loop Slot			UEP91	1PQWV	0.66										
	Feature Activation on D-4 Channel Bank Tjie Line/Trunk Loop Slot			UEP91	1PQWQ	0.66										
	Feature Activation on D-4 Channel Bank WATS Loop Slot			UEP91	1PQWA	0.66										
Non-Recurring Charges (NRC) Associated with UNE-P Centrex																
	Conversion - Currently Combined Switch-As-Is with allowed changes, per port			UEP91	USAC2		1.03	0.29					**30.89**	**7.03**		
	New Centrex Standard Common Block			UEP91	M1ACS	0.00	658.60						**30.89**	**7.03**		
	New Centrex Customized Common Block			UEP91	M1ACC	0.00	658.60						**30.89**	**7.03**		
	Secondary Block, per Block			UEP91	M2CC1	0.00	73.55						**30.89**	**7.03**		
	NAR Establishment Charge, Per Occasion			UEP91	URECA		68.57						**30.89**	**7.03**		
Additional Non-Recurring Charges (NRC)																
	Unbundled Miscellaneous Rate Element, Tag Loop at End Use Premise			UEP91	URETL		8.33	0.83								
	Unbundled Miscellaneous Rate Element, Tag Design Loop at End Use Premise			UEP91	URETN		11.23	1.10								
UNE-P CENTREX - 5ESS (Valid in All States)																
2-Wire VG Loop/2-Wire Voice Grade Port (Centrex) Combo																
UNE Port/Loop Combination Rates (Non-Design)																
	2-Wire VG Loop/2-Wire Voice Grade Port (Centrex) Port Combo - Non-Design					15.18										
	2-Wire VG Loop/2-Wire Voice Grade Port (Centrex)Port Combo - Non-Design					19.01										
	2-Wire VG Loop/2-Wire Voice Grade Port (Centrex)Port Combo - Non-Design					24.02										
UNE Port/Loop Combination Rates (Design)																
	2-Wire VG Loop/2-Wire Voice Grade Port (Centrex) Port Combo - Design					19.26										
	2-Wire VG Loop/2-Wire Voice Grade Port (Centrex)Port Combo - Design					24.33										
	2-Wire VG Loop/2-Wire Voice Grade Port (Centrex)Port Combo - Design					30.98										
UNE Loop Rate																
	2-Wire Voice Grade Loop (SL 1) - Zone 1		1	UEP95	UECS1	12.48										
	2-Wire Voice Grade Loop (SL 1) - Zone 2		2	UEP95	UECS1	16.31										
	2-Wire Voice Grade Loop (SL 1) - Zone 3		3	UEP95	UECS1	21.32										
	2-Wire Voice Grade Loop (SL 2) - Zone 1		1	UEP95	UECS2	16.56										
	2-Wire Voice Grade Loop (SL 2) - Zone 2		2	UEP95	UECS2	21.63										
	2-Wire Voice Grade Loop (SL 2) - Zone 3		3	UEP95	UECS2	28.28										
UNE Port Rate																
All States																
	2-Wire Voice Grade Port (Centrex) Basic Local Area			UEP95	UEPYA	2.70	22.14	15.25	8.45	3.91			**30.89**	**7.03**		
	2-Wire Voice Grade Port (Centrex 800 termination)			UEP95	UEPYB	2.70	22.14	15.25	8.45	3.91			**30.89**	**7.03**		
	2-Wire Voice Grade Port (Centrex with Caller ID)1Basic Local Area			UEP95	UEPYH	2.70	22.14	15.25	8.45	3.91			**30.89**	**7.03**		
	2-Wire Voice Grade Port (Centrex from diff Serving Wire Center)2,3 Basic Local Area			UEP95	UEPYM	2.70	22.14	15.25	8.45	3.91			**30.89**	**7.03**		
	2-Wire Voice Grade Port, Diff Serving Wire Center 2,3 - 800 Service Term - Basic Local Area			UEP95	UEPYZ	2.70	22.14	15.25	8.45	3.91			**30.89**	**7.03**		
	2-Wire Voice Grade Port terminated in on Megalink or equivalent - Basic Local Area			UEP95	UEPY9	2.70	22.14	15.25	8.45	3.91			**30.89**	**7.03**		
	2-Wire Voice Grade Port Terminated on 800 Service Term - Basic Local Area			UEP95	UEPY2	2.70	22.14	15.25	8.45	3.91			**30.89**	**7.03**		
AL, KY, LA, MS, SC, & TN Only																
	2-Wire Voice Grade Port (Centrex)			UEP95	UEPQA	2.70	22.14	15.25	8.45	3.91			**30.89**	**7.03**		
	2-Wire Voice Grade Port (Centrex 800 termination)			UEP95	UEPQB	2.70	22.14	15.25	8.45	3.91			**30.89**	**7.03**		

UNBUNDLED NETWORK ELEMENTS - Tennessee

Attachment: 2 Ex. A

CATEGORY	RATE ELEMENTS	Interim	Zone	BCS	USOC	RATES ($)					Svc Order Submitted Elec per LSR	Svc Order Submitted Manually per LSR	Incremental Charge - Manual Svc Order vs. Electronic-1st	Incremental Charge - Manual Svc Order vs. Electronic-Add'l	Incremental Charge - Manual Svc Order vs. Electronic-Disc 1st	Incremental Charge - Manual Svc Order vs. Electronic-Disc Add'l
						Rec	Nonrecurring		Nonrecurring Disconnect		OSS Rates ($)					
							First	Add'l	First	Add'l	SOMEC	SOMAN	SOMAN	SOMAN	SOMAN	SOMAN
	2-Wire Voice Grade Port (Centrex with Caller ID)1			UEP95	UEPQH	2.70	22.14	15.25	8.45	3.91			**30.89**	**7.03**		
	2-Wire Voice Grade Port (Centrex from diff Serving Wire Center)2,3			UEP95	UEPQM	2.70	22.14	15.25	8.45	3.91			**30.89**	**7.03**		
	2-Wire Voice Grade Port, Diff Serving Wire Center - 800 Service Term 2,3			UEP95	UEPQZ	2.70	22.14	15.25	8.45	3.91			**30.89**	**7.03**		
	2-Wire Voice Grade Port terminated in on Megalink or equivalent			UEP95	UEPQ9	2.70	22.14	15.25	8.45	3.91			**30.89**	**7.03**		
	2-Wire Voice Grade Port Terminated on 800 Service Term			UEP95	UEPQ2	2.70	22.14	15.25	8.45	3.91			**30.89**	**7.03**		
FL & GA Only																
Local Switching																
	Centrex Intercom Funtionality, per port			UEP95	URECS	0.6381										
Features																
	All Standard Features Offered, per port			UEP95	UEPVF	0.00										
	All Select Features Offered, per port			UEP95	UEPVS	0.00	433.78									
	All Centrex Control Features Offered, per port			UEP95	UEPVC	0.00										
NARS																
	Unbundled Network Access Register - Combination			UEP95	UARCX	0.00	0.00	0.00	0.00	0.00						
	Unbundled Network Access Register - Indial			UEP95	UAR1X	0.00	0.00	0.00	0.00	0.00						
	Unbundled Network Access Register - Outdial			UEP95	UAROX	0.00	0.00	0.00	0.00	0.00						
Miscellaneous Terminations																
2-Wire Trunk Side																
	Trunk Side Terminations, each			UEP95	CEND6	8.78	47.75	47.01	9.21	8.47			**30.89**	**7.03**		
4-Wire Digital (1.544 Megabits)																
	DS1 Circuit Terminations, each			UEP95	M1HD1	35.55	75.93	38.15					**30.89**	**7.03**		
	DS0 Channels Activated, each			UEP95	M1HDO	0.00	108.67						**30.89**	**7.03**		
Interoffice Channel Mileage - 2-Wire																
	Interoffice Channel Facilities Termination			UEP95	M1GBC	18.58	22.14	15.25	8.45	3.91			**30.89**	**7.03**		
	Interoffice Channel mileage, per mile or fraction of mile			UEP95	M1GBM	0.0174										
Feature Activations (DS0) Centrex Loops on Channelized DS1 Service																
D4 Channel Bank Feature Activations																
	Feature Activation on D-4 Channel Bank Centrex Loop Slot			UEP95	1PQWS	0.66										
	Feature Activation on D-4 Channel Bank FX line Side Loop Slot			UEP95	1PQW6	0.66										
	Feature Activation on D-4 Channel Bank FX Trunk Side Loop Slot			UEP95	1PQW7	0.66										
	Feature Activation on D-4 Channel Bank Centrex Loop Slot - Different Wire Center			UEP95	1PQWP	0.66										
	Feature Activation on D-4 Channel Bank Private Line Loop Slot			UEP95	1PQWV	0.66										
	Feature Activation on D-4 Channel Bank Tjie Line/Trunk Loop Slot			UEP95	1PQWQ	0.66										
	Feature Activation on D-4 Channel Bank WATS Loop Slot			UEP95	1PQWA	0.66										
Non-Recurring Charges (NRC) Associated with UNE-P Centrex																
	NRC Conversion Currently Combined Switch-As-Is with allowed changes, per port			UEP95	USAC2		1.03	0.29					**30.89**	**7.03**		
	New Centrex Standard Common Block			UEP95	M1ACS	0.00	658.60						**30.89**	**7.03**		
	New Centrex Customized Common Block			UEP95	M1ACC	0.00	658.60						**30.89**	**7.03**		
	NAR Establishment Charge, Per Occasion			UEP95	URECA	0.00	68.57						**30.89**	**7.03**		
Additional Non-Recurring Charges (NRC)																
	Unbundled Miscellaneous Rate Element, Tag Loop at End Use Premise			UEP95	URETL		8.33	0.83								
	Unbundled Miscellaneous Rate Element, Tag Design Loop at End Use Premise			UEP95	URETN		11.23	1.10								
UNE-P CENTREX - DMS100 (Valid in All States)																
2-Wire VG Loop/2-Wire Voice Grade Port (Centrex) Combo																
UNE Port/Loop Combination Rates (Non-Design)																
	2-Wire VG Loop/2-Wire Voice Grade Port (Centrex) Port Combo - Non-Design					15.18										
	2-Wire VG Loop/2-Wire Voice Grade Port (Centrex)Port Combo - Non-Design					19.01										
	2-Wire VG Loop/2-Wire Voice Grade Port (Centrex)Port Combo - Non-Design					24.02										
UNE Port/Loop Combination Rates (Design)																

CATEGORY	RATE ELEMENTS	Interim	Zone	BCS	USOC	RATES ($)					Svc Order Submitted Elec per LSR	Svc Order Submitted Manually per LSR	Incremental Charge - Manual Svc Order vs. Electronic-1st	Incremental Charge - Manual Svc Order vs. Electronic-Add'l	Incremental Charge - Manual Svc Order vs. Electronic-Disc 1st	Incremental Charge - Manual Svc Order vs. Electronic-Disc Add'l
						Rec	Nonrecurring		Nonrecurring Disconnect		OSS Rates ($)					
							First	Add'l	First	Add'l	SOMEC	SOMAN	SOMAN	SOMAN	SOMAN	SOMAN
	2-Wire VG Loop/2-Wire Voice Grade Port (Centrex) Port Combo - Design					19.26										
	2-Wire VG Loop/2-Wire Voice Grade Port (Centrex)Port Combo - Design					24.33										
	2-Wire VG Loop/2-Wire Voice Grade Port (Centrex)Port Combo - Design					30.98										
UNE Loop Rate																
	2-Wire Voice Grade Loop (SL 1) - Zone 1		1	UEP9D	UECS1	12.48										
	2-Wire Voice Grade Loop (SL 1) - Zone 2		2	UEP9D	UECS1	16.31										
	2-Wire Voice Grade Loop (SL 1) - Zone 3		3	UEP9D	UECS1	21.32										
	2-Wire Voice Grade Loop (SL 2) - Zone 1		1	UEP9D	UECS2	16.56										
	2-Wire Voice Grade Loop (SL 2) - Zone 2		2	UEP9D	UECS2	21.63										
	2-Wire Voice Grade Loop (SL 2) - Zone 3		3	UEP9D	UECS2	28.28										
UNE Port Rate																
ALL STATES																
	2-Wire Voice Grade Port (Centrex) Basic Local Area			UEP9D	UEPYA	2.70	22.14	15.25	8.45	3.91			**30.89**	**7.03**		
	2-Wire Voice Grade Port (Centrex 800 termination)Basic Local Area			UEP9D	UEPYB	2.70	22.14	15.25	8.45	3.91			**30.89**	**7.03**		
	2-Wire Voice Grade Port (Centrex / EBS-PSET)3Basic Local Area			UEP9D	UEPYC	2.70	22.14	15.25	8.45	3.91			**30.89**	**7.03**		
	2-Wire Voice Grade Port (Centrex / EBS-M5009)3Basic Local Area			UEP9D	UEPYD	2.70	22.14	15.25	8.45	3.91			**30.89**	**7.03**		
	2-Wire Voice Grade Port (Centrex / EBS-M5209))3 Basic Local Area			UEP9D	UEPYE	2.70	22.14	15.25	8.45	3.91			**30.89**	**7.03**		
	2-Wire Voice Grade Port (Centrex / EBS-M5112))3 Basic Local Area			UEP9D	UEPYF	2.70	22.14	15.25	8.45	3.91			**30.89**	**7.03**		
	2-Wire Voice Grade Port (Centrex / EBS-M5312))3Basic Local Area			UEP9D	UEPYG	2.70	22.14	15.25	8.45	3.91			**30.89**	**7.03**		
	2-Wire Voice Grade Port (Centrex / EBS-M5008))3 Basic Local Area			UEP9D	UEPYT	2.70	22.14	15.25	8.45	3.91			**30.89**	**7.03**		
	2-Wire Voice Grade Port (Centrex / EBS-M5208))3 Basic Local Area			UEP9D	UEPYU	2.70	22.14	15.25	8.45	3.91			**30.89**	**7.03**		
	2-Wire Voice Grade Port (Centrex / EBS-M5216))3 Basic Local Area			UEP9D	UEPYV	2.70	22.14	15.25	8.45	3.91			**30.89**	**7.03**		
	2-Wire Voice Grade Port (Centrex / EBS-M5316))3 Basic Local Area			UEP9D	UEPY3	2.70	22.14	15.25	8.45	3.91			**30.89**	**7.03**		
	2-Wire Voice Grade Port (Centrex with Caller ID) Basic Local Area			UEP9D	UEPYH	2.70	22.14	15.25	8.45	3.91			**30.89**	**7.03**		
	2-Wire Voice Grade Port (Centrex/Caller ID/Msg Wtg Lamp Indication))4 Basic Local Area			UEP9D	UEPYW	2.70	22.14	15.25	8.45	3.91			**30.89**	**7.03**		
	2-Wire Voice Grade Port (Centrex/Msg Wtg Lamp Indication))4 Basic Local Area			UEP9D	UEPYJ	2.70	22.14	15.25	8.45	3.91			**30.89**	**7.03**		
	2-Wire Voice Grade Port (Centrex from diff Serving Wire Center) 2,3-Basic Local Area			UEP9D	UEPYM	2.70	22.14	15.25	8.45	3.91			**30.89**	**7.03**		
	2-Wire Voice Grade Port (Centrex/differ SWC /EBS-PSET)2,3,4 Basic Local Area			UEP9D	UEPYO	2.70	22.14	15.25	8.45	3.91			**30.89**	**7.03**		
	2-Wire Voice Grade Port (Centrex/differ SWC /EBS-M5009)2,3,4 Basic Local Area			UEP9D	UEPYP	2.70	22.14	15.25	8.45	3.91			**30.89**	**7.03**		
	2-Wire Voice Grade Port (Centrex/differ SWC /EBS-5209)2,3,4 Basic Local Area			UEP9D	UEPYQ	2.70	22.14	15.25	8.45	3.91			**30.89**	**7.03**		
	2-Wire Voice Grade Port (Centrex/differ SWC /EBS-M5112)2,3,4 Basic Local Area			UEP9D	UEPYR	2.70	22.14	15.25	8.45	3.91			**30.89**	**7.03**		
	2-Wire Voice Grade Port (Centrex/differ SWC /EBS-M5312)2,3,4 Basic Local Area			UEP9D	UEPYS	2.70	22.14	15.25	8.45	3.91			**30.89**	**7.03**		
	2-Wire Voice Grade Port (Centrex/differ SWC /EBS-M5008)2,3,4 Basic Local Area			UEP9D	UEPY4	2.70	22.14	15.25	8.45	3.91			**30.89**	**7.03**		
	2-Wire Voice Grade Port (Centrex/differ SWC /EBS-M5208)2, 3 Basic Local Area			UEP9D	UEPY5	2.70	22.14	15.25	8.45	3.91			**30.89**	**7.03**		
	2-Wire Voice Grade Port (Centrex/differ SWC /EBS-M5216)2,3,4 Basic Local Area			UEP9D	UEPY6	2.70	22.14	15.25	8.45	3.91			**30.89**	**7.03**		
	2-Wire Voice Grade Port (Centrex/differ SWC /EBS-M5316)2,3,4 Basic Local Area			UEP9D	UEPY7	2.70	22.14	15.25	8.45	3.91			**30.89**	**7.03**		
	2-Wire Voice Grade Port, Diff Serving Wire Center - 800 Service Term 2,3			UEP9D	UEPYZ	2.70	22.14	15.25	8.45	3.91			**30.89**	**7.03**		

CATEGORY	RATE ELEMENTS	Interim	Zone	BCS	USOC	RATES ($)					Svc Order Submitted Elec per LSR	Svc Order Submitted Manually per LSR	Incremental Charge - Manual Svc Order vs. Electronic-1st	Incremental Charge - Manual Svc Order vs. Electronic-Add'l	Incremental Charge - Manual Svc Order vs. Electronic-Disc 1st	Incremental Charge - Manual Svc Order vs. Electronic-Disc Add'l
						Rec	Nonrecurring		Nonrecurring Disconnect		OSS Rates ($)					
							First	Add'l	First	Add'l	SOMEC	SOMAN	SOMAN	SOMAN	SOMAN	SOMAN
	2-Wire Voice Grade Port terminated in on Megalink or equivalent Basic Local Area			UEP9D	UEPY9	2.70	22.14	15.25	8.45	3.91			**30.89**	**7.03**		
	2-Wire Voice Grade Port Terminated on 800 Service Term Basic Local Area			UEP9D	UEPY2	2.70	22.14	15.25	8.45	3.91			**30.89**	**7.03**		
AL, KY, LA, MS, SC, & TN Only																
	2-Wire Voice Grade Port (Centrex)			UEP9D	UEPQA	2.70	22.14	15.25	8.45	3.91			**30.89**	**7.03**		
	2-Wire Voice Grade Port (Centrex 800 termination)			UEP9D	UEPQB	2.70	22.14	15.25	8.45	3.91			**30.89**	**7.03**		
	2-Wire Voice Grade Port (Centrex / EBS-PSET)4			UEP9D	UEPQC	2.70	22.14	15.25	8.45	3.91			**30.89**	**7.03**		
	2-Wire Voice Grade Port (Centrex / EBS-M5009)4			UEP9D	UEPQD	2.70	22.14	15.25	8.45	3.91			**30.89**	**7.03**		
	2-Wire Voice Grade Port (Centrex / EBS-M5209)4			UEP9D	UEPQE	2.70	22.14	15.25	8.45	3.91			**30.89**	**7.03**		
	2-Wire Voice Grade Port (Centrex / EBS-M5112)4			UEP9D	UEPQF	2.70	22.14	15.25	8.45	3.91			**30.89**	**7.03**		
	2-Wire Voice Grade Port (Centrex / EBS-M5312)4			UEP9D	UEPQG	2.70	22.14	15.25	8.45	3.91			**30.89**	**7.03**		
	2-Wire Voice Grade Port (Centrex / EBS-M5008)4			UEP9D	UEPQT	2.70	22.14	15.25	8.45	3.91			**30.89**	**7.03**		
	2-Wire Voice Grade Port (Centrex / EBS-M5208)4			UEP9D	UEPQU	2.70	22.14	15.25	8.45	3.91			**30.89**	**7.03**		
	2-Wire Voice Grade Port (Centrex / EBS-M5216)4			UEP9D	UEPQV	2.70	22.14	15.25	8.45	3.91			**30.89**	**7.03**		
	2-Wire Voice Grade Port (Centrex / EBS-M5316)4			UEP9D	UEPQ3	2.70	22.14	15.25	8.45	3.91			**30.89**	**7.03**		
	2-Wire Voice Grade Port (Centrex with Caller ID)			UEP9D	UEPQH	2.70	22.14	15.25	8.45	3.91			**30.89**	**7.03**		
	2-Wire Voice Grade Port (Centrex/Caller ID/Msg Wtg Lamp Indication)4			UEP9D	UEPQW	2.70	22.14	15.25	8.45	3.91			**30.89**	**7.03**		
	2-Wire Voice Grade Port (Centrex/Msg Wtg Lamp Indication)4			UEP9D	UEPQJ	2.70	22.14	15.25	8.45	3.91			**30.89**	**7.03**		
	2-Wire Voice Grade Port (Centrex from diff Serving Wire Center) 2,3			UEP9D	UEPQM	2.70	22.14	15.25	8.45	3.91			**30.89**	**7.03**		
	2-Wire Voice Grade Port (Centrex/differ SWC /EBS-PSET)2,3,4			UEP9D	UEPQO	2.70	22.14	15.25	8.45	3.91			**30.89**	**7.03**		
	2-Wire Voice Grade Port (Centrex/differ SWC /EBS-M5009)2,3,4			UEP9D	UEPQP	2.70	22.14	15.25	8.45	3.91			**30.89**	**7.03**		
	2-Wire Voice Grade Port (Centrex/differ SWC /EBS-5209)2,3,4			UEP9D	UEPQQ	2.70	22.14	15.25	8.45	3.91			**30.89**	**7.03**		
	2-Wire Voice Grade Port (Centrex/differ SWC /EBS-M5112)2,3,4			UEP9D	UEPQR	2.70	22.14	15.25	8.45	3.91			**30.89**	**7.03**		
	2-Wire Voice Grade Port (Centrex/differ SWC /EBS-M5312)2,3,4			UEP9D	UEPQS	2.70	22.14	15.25	8.45	3.91			**30.89**	**7.03**		
	2-Wire Voice Grade Port (Centrex/differ SWC /EBS-M5008)2,3,4			UEP9D	UEPQ4	2.70	22.14	15.25	8.45	3.91			**30.89**	**7.03**		
	2-Wire Voice Grade Port (Centrex/differ SWC /EBS-M5208)2,3,4			UEP9D	UEPQ5	2.70	22.14	15.25	8.45	3.91			**30.89**	**7.03**		
	2-Wire Voice Grade Port (Centrex/differ SWC /EBS-M5216)2,3,4			UEP9D	UEPQ6	2.70	22.14	15.25	8.45	3.91			**30.89**	**7.03**		
	2-Wire Voice Grade Port (Centrex/differ SWC /EBS-M5316)2,3,4			UEP9D	UEPQ7	2.70	22.14	15.25	8.45	3.91			**30.89**	**7.03**		
	2-Wire Voice Grade Port, Diff Serving Wire Center - 800 Service Term 2,3			UEP9D	UEPQZ	2.70	22.14	15.25	8.45	3.91			**30.89**	**7.03**		
	2-Wire Voice Grade Port terminated in on Megalink or equivalent			UEP9D	UEPQ9	2.70	22.14	15.25	8.45	3.91			**30.89**	**7.03**		
	2-Wire Voice Grade Port Terminated on 800 Service Term			UEP9D	UEPQ2	2.70	22.14	15.25	8.45	3.91			**30.89**	**7.03**		
Local Switching																
	Centrex Intercom Funtionality, per port			UEP9D	URECS	0.6381										
Features																
	All Standard Features Offered, per port			UEP9D	UEPVF	0.00										
	All Select Features Offered, per port			UEP9D	UEPVS	0.00	433.78									
	All Centrex Control Features Offered, per port			UEP9D	UEPVC	0.00										
NARS																
	Unbundled Network Access Register - Combination			UEP9D	UARCX	0.00	0.00	0.00	0.00	0.00						
	Unbundled Network Access Register - Inward			UEP9D	UAR1X	0.00	0.00	0.00	0.00	0.00						
	Unbundled Network Access Register - Outdial			UEP9D	UAROX	0.00	0.00	0.00	0.00	0.00						
Miscellaneous Terminations																
2-Wire Trunk Side																
	Trunk Side Terminations, each			UEP9D	CEND6	8.78	22.14	15.25	8.45	3.91			**30.89**	**7.03**		
4-Wire Digital (1.544 Megabits)																
	DS1 Circuit Terminations, each			UEP9D	M1HD1	35.55	75.93	38.15					**30.89**	**7.03**		
	DS0 Channels Activiated per Channel			UEP9D	M1HDO	0.00	108.67						**30.89**	**7.03**		
Interoffice Channel Mileage - 2-Wire																
	Interoffice Channel Facilities Termination			UEP9D	M1GBC	18.58	22.14	15.25	8.45	3.91			**30.89**	**7.03**		
	Interoffice Channel mileage, per mile or fraction of mile			UEP9D	M1GBM	0.0174										

UNBUNDLED NETWORK ELEMENTS - Tennessee

Attachment: 2 Ex. A

CATEGORY	RATE ELEMENTS	Interim	Zone	BCS	USOC	RATES ($)					Svc Order Submitted Elec per LSR	Svc Order Submitted Manually per LSR	Incremental Charge - Manual Svc Order vs. Electronic-1st	Incremental Charge - Manual Svc Order vs. Electronic-Add'l	Incremental Charge - Manual Svc Order vs. Electronic-Disc 1st	Incremental Charge - Manual Svc Order vs. Electronic-Disc Add'l
						Rec	Nonrecurring		Nonrecurring Disconnect		OSS Rates ($)					
							First	Add'l	First	Add'l	SOMEC	SOMAN	SOMAN	SOMAN	SOMAN	SOMAN
Feature Activations (DS0) Centrex Loops on Channelized DS1 Service																
D4 Channel Bank Feature Activations																
	Feature Activation on D-4 Channel Bank Centrex Loop Slot			UEP9D	1PQWS	0.66										
	Feature Activation on D-4 Channel Bank FX line Side Loop Slot			UEP9D	1PQW6	0.66										
	Feature Activation on D-4 Channel Bank FX Trunk Side Loop Slot			UEP9D	1PQW7	0.66										
	Feature Activation on D-4 Channel Bank Centrex Loop Slot - Different Wire Center			UEP9D	1PQWP	0.66										
	Feature Activation on D-4 Channel Bank Private Line Loop Slot			UEP9D	1PQWV	0.66										
	Feature Activation on D-4 Channel Bank Tjie Line/Trunk Loop Slot			UEP9D	1PQWQ	0.66										
	Feature Activation on D-4 Channel Bank WATS Loop Slot			UEP9D	1PQWA	0.66										
Non-Recurring Charges (NRC) Associated with UNE-P Centrex																
	NRC Conversion Currently Combined Switch-As-Is with allowed changes, per port			UEP9D	USAC2		1.03	0.29					**30.89**	**7.03**		
	New Centrex Standard Common Block			UEP9D	M1ACS	0.00	658.60						**30.89**	**7.03**		
	New Centrex Customized Common Block			UEP9D	M1ACC	0.00	658.60						**30.89**	**7.03**		
	NAR Establishment Charge, Per Occasion			UEP9D	URECA		68.57						**30.89**	**7.03**		
Additional Non-Recurring Charges (NRC)																
	Unbundled Miscellaneous Rate Element, Tag Loop at End Use Premise			UEP9D	URETL		8.33	0.83								
	Unbundled Miscellaneous Rate Element, Tag Design Loop at End Use Premise			UEP9D	URETN		11.23	1.10								
UNE-P CENTREX - EWSD (Valid in AL, FL, KY, LA, MS & TN)																
2-Wire VG Loop/2-Wire Voice Grade Port (Centrex) Combo																
UNE Port/Loop Combination Rates (Non-Design)																
	2-Wire VG Loop/2-Wire Voice Grade Port (Centrex) Port Combo - Non-Design					15.18										
	2-Wire VG Loop/2-Wire Voice Grade Port (Centrex)Port Combo - Non-Design					19.01										
	2-Wire VG Loop/2-Wire Voice Grade Port (Centrex)Port Combo - Non-Design					24.02										
UNE Port/Loop Combination Rates (Design)																
	2-Wire VG Loop/2-Wire Voice Grade Port (Centrex) Port Combo - Design					19.26										
	2-Wire VG Loop/2-Wire Voice Grade Port (Centrex)Port Combo - Design					24.33										
	2-Wire VG Loop/2-Wire Voice Grade Port (Centrex)Port Combo - Design					30.98										
UNE Loop Rate																
	2-Wire Voice Grade Loop (SL 1) - Zone 1		1	UEP9E	UECS1	12.48										
	2-Wire Voice Grade Loop (SL 1) - Zone 2		2	UEP9E	UECS1	16.31										
	2-Wire Voice Grade Loop (SL 1) - Zone 3		3	UEP9E	UECS1	21.32										
	2-Wire Voice Grade Loop (SL 2) - Zone 1		1	UEP9E	UECS2	16.56										
	2-Wire Voice Grade Loop (SL 2) - Zone 2		2	UEP9E	UECS2	21.63										
	2-Wire Voice Grade Loop (SL 2) - Zone 3		3	UEP9E	UECS2	28.28										
UNE Port Rate																
AL, FL, KY, LA, MS, & TN only																
	2-Wire Voice Grade Port (Centrex) Basic Local Area			UEP9E	UEPYA	2.70	22.14	15.25	8.45	3.91			**30.89**	**7.03**		
	2-Wire Voice Grade Port (Centrex 800 termination)Basic Local Area			UEP9E	UEPYB	2.70	22.14	15.25	8.45	3.91			**30.89**	**7.03**		
	2-Wire Voice Grade Port (Centrex with Caller ID)1Basic Local Area			UEP9E	UEPYH	2.70	22.14	15.25	8.45	3.91			**30.89**	**7.03**		
	2-Wire Voice Grade Port (Centrex from diff Serving Wire Center)2,3 Basic Local Area			UEP9E	UEPYM	2.70	22.14	15.25	8.45	3.91			**30.89**	**7.03**		
	2-Wire Voice Grade Port, Diff Serving Wire Center 2,3 - 800 Service Term - Basic Local Area			UEP9E	UEPYZ	2.70	22.14	15.25	8.45	3.91			**30.89**	**7.03**		
	2-Wire Voice Grade Port terminated in on Megalink or equivalent - Basic Local Area			UEP9E	UEPY9	2.70	22.14	15.25	8.45	3.91			**30.89**	**7.03**		
	2-Wire Voice Grade Port Terminated on 800 Service Term - Basic Local Area			UEP9E	UEPY2	2.70	22.14	15.25	8.45	3.91			**30.89**	**7.03**		
AL, KY, LA, MS, & TN Only																

UNBUNDLED NETWORK ELEMENTS - Tennessee

Attachment: 2 Ex. A

CATEGORY	RATE ELEMENTS	Interim	Zone	BCS	USOC	RATES ($)					Svc Order Submitted Elec per LSR	Svc Order Submitted Manually per LSR	Incremental Charge - Manual Svc Order vs. Electronic-1st	Incremental Charge - Manual Svc Order vs. Electronic-Add'l	Incremental Charge - Manual Svc Order vs. Electronic-Disc 1st	Incremental Charge - Manual Svc Order vs. Electronic-Disc Add'l
						Rec	Nonrecurring		Nonrecurring Disconnect		OSS Rates ($)					
							First	Add'l	First	Add'l	SOMEC	SOMAN	SOMAN	SOMAN	SOMAN	SOMAN
	2-Wire Voice Grade Port (Centrex)			UEP9E	UEPQA	2.70	22.14	15.25	8.45	3.91			**30.89**	**7.03**		
	2-Wire Voice Grade Port (Centrex 800 termination)			UEP9E	UEPQB	2.70	22.14	15.25	8.45	3.91			**30.89**	**7.03**		
	2-Wire Voice Grade Port (Centrex with Caller ID)1			UEP9E	UEPQH	2.70	22.14	15.25	8.45	3.91			**30.89**	**7.03**		
	2-Wire Voice Grade Port (Centrex from diff Serving Wire Center)2,3			UEP9E	UEPQM	2.70	22.14	15.25	8.45	3.91			**30.89**	**7.03**		
	2-Wire Voice Grade Port, Diff Serving Wire Center 2,3 - 800 Service Term			UEP9E	UEPQZ	2.70	22.14	15.25	8.45	3.91			**30.89**	**7.03**		
	2-Wire Voice Grade Port terminated in on Megalink or equivalent			UEP9E	UEPQ9	2.70	22.14	15.25	8.45	3.91			**30.89**	**7.03**		
	2-Wire Voice Grade Port Terminated on 800 Service Term			UEP9E	UEPQ2	2.70	22.14	15.25	8.45	3.91			**30.89**	**7.03**		
Local Switching																
	Centrex Intercom Funtionality, per port			UEP9E	URECS	0.6381										
Features																
	All Standard Features Offered, per port			UEP9E	UEPVF	0.00							**30.89**	**7.03**		
	All Select Features Offered, per port			UEP9E	UEPVS	0.00	433.78						**30.89**	**7.03**		
	All Centrex Control Features Offered, per port			UEP9E	UEPVC	0.00							**30.89**	**7.03**		
NARS																
	Unbundled Network Access Register - Combination			UEP9E	UARCX	0.00	0.00	0.00	0.00	0.00			**30.89**	**7.03**		
	Unbundled Network Access Register - Indial			UEP9E	UAR1X	0.00	0.00	0.00	0.00	0.00			**30.89**	**7.03**		
	Unbundled Network Access Register - Outdial			UEP9E	UAROX	0.00	0.00	0.00	0.00	0.00			**30.89**	**7.03**		
Miscellaneous Terminations																
2-Wire Trunk Side																
	Trunk Side Terminations, each			UEP9E	CEND6	8.78	22.14	15.25	8.45	3.91			**30.89**	**7.03**		
4-Wire Digital (1.544 Megabits)																
	DS1 Circuit Terminations, each			UEP9E	M1HD1	35.55	75.93	38.15					**30.89**	**7.03**		
	DS0 Channel Activated Per Channel			UEP9E	M1HDO	0.00	108.67						**30.89**	**7.03**		
Interoffice Channel Mileage - 2-Wire																
	Interoffice Channel Facilities Termination			UEP9E	M1GBC	18.58	22.14	15.25	8.45	3.91			**30.89**	**7.03**		
	Interoffice Channel mileage, per mile or fraction of mile			UEP9E	M1GBM	0.0174										
Feature Activations (DS0) Centrex Loops on Channelized DS1 Service																
D4 Channel Bank Feature Activations																
	Feature Activation on D-4 Channel Bank Centrex Loop Slot			UEP9E	1PQWS	0.66										
	Feature Activation on D-4 Channel Bank FX line Side Loop Slot			UEP9E	1PQW6	0.66										
	Feature Activation on D-4 Channel Bank FX Trunk Side Loop Slot			UEP9E	1PQW7	0.66										
	Feature Activation on D-4 Channel Bank Centrex Loop Slot - Different Wire Center			UEP9E	1PQWP	0.66										
	Feature Activation on D-4 Channel Bank Private Line Loop Slot			UEP9E	1PQWV	0.66										
	Feature Activation on D-4 Channel Bank Tjie Line/Trunk Loop Slot			UEP9E	1PQWQ	0.66										
	Feature Activation on D-4 Channel Bank WATS Loop Slot			UEP9E	1PQWA	0.66										
Non-Recurring Charges (NRC) Associated with UNE-P Centrex																
	NRC Conversion Currently Combined Switch-As-Is with allowed changes, per port			UEP9E	USAC2		1.03	0.29					**30.89**	**7.03**		
	New Centrex Standard Common Block			UEP9E	M1ACS	0.00	658.60						**30.89**	**7.03**		
	New Centrex Customized Common Block			UEP9E	M1ACC	0.00	658.60						**30.89**	**7.03**		
	NAR Establishment Charge, Per Occasion			UEP9E	URECA	0.00	68.57						**30.89**	**7.03**		
Additional Non-Recurring Charges (NRC)																
	Unbundled Miscellaneous Rate Element, Tag Loop at End Use Premise			UEP9E	URETL		8.33	0.83								
	Unbundled Miscellaneous Rate Element, Tag Design Loop at End Use Premise			UEP9E	URETN		11.23	1.10								
UNE-P CENTREX - DCO - Valid in AL, KY, LA, MS, & TN)																
2-Wire VG Loop/2-Wire Voice Grade Port (Centrex) Combo																
UNE Port/Loop Combination Rates (Non-Design)																
	2-Wire VG Loop/2-Wire Voice Grade Port (Centrex) Port Combo - Non-Design					15.18										
	2-Wire VG Loop/2-Wire Voice Grade Port (Centrex)Port Combo - Non-Design					19.01										
	2-Wire VG Loop/2-Wire Voice Grade Port (Centrex)Port Combo - Non-Design					24.02										
UNE Port/Loop Combination Rates (Design)																

CATEGORY	RATE ELEMENTS	Interim	Zone	BCS	USOC	RATES ($)					Svc Order Submitted Elec per LSR	Svc Order Submitted Manually per LSR	Incremental Charge - Manual Svc Order vs. Electronic-1st	Incremental Charge - Manual Svc Order vs. Electronic-Add'l	Incremental Charge - Manual Svc Order vs. Electronic-Disc 1st	Incremental Charge - Manual Svc Order vs. Electronic-Disc Add'l
						Rec	Nonrecurring		Nonrecurring Disconnect		OSS Rates ($)					
							First	Add'l	First	Add'l	SOMEC	SOMAN	SOMAN	SOMAN	SOMAN	SOMAN
	2-Wire VG Loop/2-Wire Voice Grade Port (Centrex) Port Combo - Design					19.26										
	2-Wire VG Loop/2-Wire Voice Grade Port (Centrex)Port Combo - Design					24.33										
	2-Wire VG Loop/2-Wire Voice Grade Port (Centrex)Port Combo - Design					30.98										
UNE Loop Rate																
	2-Wire Voice Grade Loop (SL 1) - Zone 1		1	UEP93	UECS1	12.48										
	2-Wire Voice Grade Loop (SL 1) - Zone 2		2	UEP93	UECS1	16.31										
	2-Wire Voice Grade Loop (SL 1) - Zone 3		3	UEP93	UECS1	21.32										
	2-Wire Voice Grade Loop (SL 2) - Zone 1		1	UEP93	UECS2	16.56										
	2-Wire Voice Grade Loop (SL 2) - Zone 2		2	UEP93	UECS2	21.63										
	2-Wire Voice Grade Loop (SL 2) - Zone 3		3	UEP93	UECS2	28.28										
UNE Port Rate																
AL, KY, LA, MS, & TN only																
	2-Wire Voice Grade Port (Centrex) Basic Local Area			UEP93	UEPYA	2.70	22.14	15.25	8.45	3.91			**30.89**	**7.03**		
	2-Wire Voice Grade Port (Centrex 800 termination)Basic Local Area			UEP93	UEPYB	2.70	22.14	15.25	8.45	3.91			**30.89**	**7.03**		
	2-Wire Voice Grade Port (Centrex with Caller ID)1Basic Local Area			UEP93	UEPYH	2.70	22.14	15.25	8.45	3.91			**30.89**	**7.03**		
	2-Wire Voice Grade Port (Centrex from diff Serving Wire Center)2,3 Basic Local Area			UEP93	UEPYM	2.70	22.14	15.25	8.45	3.91			**30.89**	**7.03**		
	2-Wire Voice Grade Port, Diff Serving Wire Center - 2,3 - 800 Service Term - Basic Local Area			UEP93	UEPYZ	2.70	22.14	15.25	8.45	3.91			**30.89**	**7.03**		
	2-Wire Voice Grade Port terminated in on Megalink or equivalent - Basic Local Area			UEP93	UEPY9	2.70	22.14	15.25	8.45	3.91			**30.89**	**7.03**		
	2-Wire Voice Grade Port Terminated on 800 Service Term - Basic Local Area			UEP93	UEPY2	2.70	22.14	15.25	8.45	3.91			**30.89**	**7.03**		
	2-Wire Voice Grade Port (Centrex)			UEP93	UEPQA	2.70	22.14	15.25	8.45	3.91			**30.89**	**7.03**		
	2-Wire Voice Grade Port (Centrex 800 termination)			UEP93	UEPQB	2.70	22.14	15.25	8.45	3.91			**30.89**	**7.03**		
	2-Wire Voice Grade Port (Centrex with Caller ID)1			UEP93	UEPQH	2.70	22.14	15.25	8.45	3.91			**30.89**	**7.03**		
	2-Wire Voice Grade Port (Centrex from diff Serving Wire Center)2,3			UEP93	UEPQM	2.70	22.14	15.25	8.45	3.91			**30.89**	**7.03**		
	2-Wire Voice Grade Port, Diff Serving Wire Center - 2,3 -800 Service Term			UEP93	UEPQZ	2.70	22.14	15.25	8.45	3.91			**30.89**	**7.03**		
	2-Wire Voice Grade Port terminated in on Megalink or equivalent			UEP93	UEPQ9	2.70	22.14	15.25	8.45	3.91			**30.89**	**7.03**		
	2-Wire Voice Grade Port Terminated on 800 Service Term			UEP93	UEPQ2	2.70	22.14	15.25	8.45	3.91			**30.89**	**7.03**		
Local Switching																
	Centrex Intercom Funtionality, per port			UEP93	URECS	0.6381										
Features																
	All Standard Features Offered, per port			UEP93	UEPVF	0.00										
	All Centrex Control Features Offered, per port			UEP93	UEPVC	0.00										
NARS																
	Unbundled Network Access Register - Combination			UEP93	UARCX	0.00	0.00	0.00	0.00	0.00						
	Unbundled Network Access Register - Indial			UEP93	UAR1X	0.00	0.00	0.00	0.00	0.00						
	Unbundled Network Access Register - Outdial			UEP93	UAROX	0.00	0.00	0.00	0.00	0.00						
Miscellaneous Terminations																
2-Wire Trunk Side																
	Trunk Side Terminations, each			UEP93	CEND6	8.78	22.14	15.25	8.45	3.91			**30.89**	**7.03**		
4-Wire Digital (1.544 Megabits)																
	DS1 Circuit Terminations, each			UEP93	M1HD1	35.55	75.93	38.15					**30.89**	**7.03**		
	DS0 Channels Activated, Per Channel			UEP93	M1HDO	0.00	108.67						**30.89**	**7.03**		
Interoffice Channel Mileage - 2-Wire																
	Interoffice Channel Facilities Termination			UEP93	M1GBC	18.58	22.14	15.25	8.45	3.91			**30.89**	**7.03**		
	Interoffice Channel mileage, per mile or fraction of mile			UEP93	M1GBM	0.0174										
Feature Activations (DS0) Centrex Loops on Channelized DS1 Service																
D4 Channel Bank Feature Activations																
	Feature Activation on D-4 Channel Bank Centrex Loop Slot			UEP93	1PQWS	0.66										
	Feature Activation on D-4 Channel Bank FX Line Side Loop Slot			UEP93	1PQW6	0.66										
	Feature Activation on D-4 Channel Bank FX Trunk Side Loop Slot			UEP93	1PQW7	0.66										

UNBUNDLED NETWORK ELEMENTS - Tennessee														Attachment: 2 Ex. A				
CATEGORY	RATE ELEMENTS	Interim	Zone	BCS	USOC	RATES ($)					Svc Order Submitted Elec per LSR	Svc Order Submitted Manually per LSR	Incremental Charge - Manual Svc Order vs. Electronic-1st	Incremental Charge - Manual Svc Order vs. Electronic-Add'l	Incremental Charge - Manual Svc Order vs. Electronic-Disc 1st	Incremental Charge - Manual Svc Order vs. Electronic-Disc Add'l	
						Rec	Nonrecurring		Nonrecurring Disconnect		OSS Rates ($)						
							First	Add'l	First	Add'l	SOMEC	SOMAN	SOMAN	SOMAN	SOMAN	SOMAN	
	Feature Activation on D-4 Channel Bank Centrex Loop Slot - Different Wire Center			UEP93	1PQWP	0.66											
	Feature Activation on D-4 Channel Bank Private Line Loop Slot			UEP93	1PQWV	0.66											
	Feature Activation on D-4 Channel Bank Tie Line/Trunk Loop Slot			UEP93	1PQWQ	0.66											
	Feature Activation on D-4 Channel Bank WATS Loop Slot			UEP93	1PQWA	0.66											
Non-Recurring Charges (NRC) Associated with UNE-P Centrex																	
	NRC Conversion Currently Combined Switch-As-Is with allowed changes, per port			UEP93	USAC2		1.03	0.29					**30.89**	**7.03**			
	New Centrex Standard Common Block			UEP93	M1ACS	0.00	658.60						**30.89**	**7.03**			
	New Centrex Customized Common Block			UEP93	M1ACC	0.00	658.60						**30.89**	**7.03**			
	NAR Establishment Charge, Per Occasion			UEP93	URECA		68.57						**30.89**	**7.03**			
Additional Non-Recurring Charges (NRC)																	
	Unbundled Miscellaneous Rate Element, Tag Loop at End Use Premise			UEP93	URETL		8.33	0.83									
	Unbundled Miscellaneous Rate Element, Tag Design Loop at End Use Premise			UEP93	URETN		11.23	1.10									
Note 1 - Required Port for Centrex Control in 1AESS, 5ESS & EWSD																	
Note 2 - Requres Interoffice Channel Mileage																	
Note 3 - Installation is combination of Installation charge for SL2 Loop and Port																	
Note 4 - Requires Specific Customer Premises Equipment																	
Note: Rates displaying an "I" in Interim column are interim as a result of a Commission order.																	

UNBUNDLED NETWORK ELEMENTS - Alabama

Attachment: 2 Exh. B

CATEGORY	RATE ELEMENTS	Interim	Zone	BCS	USOC	RATES ($)					Svc Order Submitted Elec per LSR	Svc Order Submitted Manually per LSR	Incremental Charge - Manual Svc Order vs. Electronic-1st	Incremental Charge - Manual Svc Order vs. Electronic-Add'l	Incremental Charge - Manual Svc Order vs. Electronic-Disc 1st	Incremental Charge - Manual Svc Order vs. Electronic-Disc Add'l
						Rec	Nonrecurring		Nonrecurring Disconnect		OSS Rates ($)					
							First	Add'l	First	Add'l	SOMEC	SOMAN	SOMAN	SOMAN	SOMAN	SOMAN
UNBUNDLED EXCHANGE ACCESS LOOP																
2-WIRE HIGH BIT RATE DIGITAL SUBSCRIBER LINE (HDSL) COMPATIBLE LOOP																
	2 Wire Unbundled HDSL Loop including manual service inquiry & facility reservation - Zone 1		1	UHL	UHL2X	10.05	110.00	68.00	47.24	7.44						
	2 Wire Unbundled HDSL Loop including manual service inquiry & facility reservation - Zone 2		2	UHL	UHL2X	11.70	110.00	68.00	47.24	7.44						
	2 Wire Unbundled HDSL Loop including manual service inquiry & facility reservation - Zone 3		3	UHL	UHL2X	13.16	110.00	68.00	47.24	7.44						
	2 Wire Unbundled HDSL Loop without manual service inquiry and facility reservation - Zone 1		1	UHL	UHL2W	10.05	90.00	57.00	47.24	7.44						
	2 Wire Unbundled HDSL Loop without manual service inquiry and facility reservation - Zone 2		2	UHL	UHL2W	11.70	90.00	57.00	47.24	7.44						
	2 Wire Unbundled HDSL Loop without manual service inquiry and facility reservation - Zone 3		3	UHL	UHL2W	13.16	90.00	57.00	47.24	7.44						
4-WIRE HIGH BIT RATE DIGITAL SUBSCRIBER LINE (HDSL) COMPATIBLE LOOP																
	4 Wire Unbundled HDSL Loop including manual service inquiry and facility reservation - Zone 1		1	UHL	UHL4X	16.04	148.36	68.00	51.70	9.73						
	4-Wire Unbundled HDSL Loop including manual service inquiry and facility reservation - Zone 2		2	UHL	UHL4X	17.89	148.36	68.00	51.70	9.73						
	4-Wire Unbundled HDSL Loop including manual service inquiry and facility reservation - Zone 3		3	UHL	UHL4X	17.54	148.36	68.00	51.70	9.73						
	4-Wire Unbundled HDSL Loop without manual service inquiry and facility reservation - Zone 1		1	UHL	UHL4W	16.04	94.00	57.00	51.70	9.73						
	4-Wire Unbundled HDSL Loop without manual service inquiry and facility reservation - Zone 2		2	UHL	UHL4W	17.89	94.00	57.00	51.70	9.73						
	4-Wire Unbundled HDSL Loop without manual service inquiry and facility reservation - Zone 3		3	UHL	UHL4W	17.54	94.00	57.00	51.70	9.73						
4-WIRE DS1 DIGITAL LOOP																
	4-Wire DS1 Digital Loop - Zone 1		1	USL	USLXX	94.93	252.47	157.54	44.70	11.71						
	4-Wire DS1 Digital Loop - Zone 2		2	USL	USLXX	177.31	252.47	157.54	44.70	11.71						
	4-Wire DS1 Digital Loop - Zone 3		3	USL	USLXX	361.70	252.47	157.54	44.70	11.71						
HIGH CAPACITY UNBUNDLED LOCAL LOOP																
	High Capacity Unbundled Local Loop - DS3 - Per Mile per month			UE3	1L5ND	9.64										
	High Capacity Unbundled Local Loop - DS3 - Facility Termination per month			UE3	UE3PX	355.33										
	High Capacity Unbundled Local Loop - STS-1 - Per Mile per month			UDLSX	1L5ND	9.64										
	High Capacity Unbundled Local Loop - STS-1 - Facility Termination per month			UDLSX	UDLS1	367.80										
UNBUNDLED DEDICATED TRANSPORT																
INTEROFFICE CHANNEL - DEDICATED TRANSPORT																
	Interoffice Channel - Dedicated Channel - DS1 - Per Mile per month			U1TD1	1L5XX	0.21										
	Interoffice Channel - Dedicated Tranport - DS1 - Facility Termination			U1TD1	U1TF1	69.18										
	Interoffice Channel - Dedicated Transport - DS3 - Per Mile per month			U1TD3	1L5XX	4.70										
	Interoffice Channel - Dedicated Transport - DS3 - Facility Termination per month			U1TD3	U1TF3	809.05										
	Interoffice Channel - Dedicated Transport - STS-1 - Per Mile per month			U1TS1	1L5XX	4.70										
	Interoffice Channel - Dedicated Transport - STS-1 - Facility Termination			U1TS1	U1TFS	806.58										
	Local Channel - Dedicated - 2-Wire Voice Grade			ULDVX, UNCVX	ULDV2	16.07										
	Local Channel - Dedicated - 2-Wire Voice Grade Rev Bat			ULDVX	ULDR2	16.07										
	Local Channel - Dedicated - 4-Wire Voice Grade			ULDVX, UNCVX	ULDV4	17.17										
	Local Channel - Dedicated - DS1 - Zone 1		1	ULDD1, UNC1X	ULDF1	41.12										

UNBUNDLED NETWORK ELEMENTS - Alabama

Attachment: 2 Exh. B

CATEGORY	RATE ELEMENTS	Interim	Zone	BCS	USOC	RATES ($) Rec	Nonrecurring First	Nonrecurring Add'l	Nonrecurring Disconnect First	Nonrecurring Disconnect Add'l	Svc Order Submitted Elec per LSR	Svc Order Submitted Manually per LSR	Incremental Charge - Manual Svc Order vs. Electronic- 1st	Incremental Charge - Manual Svc Order vs. Electronic- Add'l	Incremental Charge - Manual Svc Order vs. Electronic- Disc 1st	Incremental Charge - Manual Svc Order vs. Electronic- Disc Add'l
											OSS Rates ($)					
											SOMEC	SOMAN	SOMAN	SOMAN	SOMAN	SOMAN
	Local Channel - Dedicated - DS1 - Zone 2		2	ULDD1, UNC1X	ULDF1	57.48										
	Local Channel - Dedicated - DS1 - Zone 3		3	ULDD1, UNC1X	ULDF1	123.77										
	Local Channel - Dedicated - DS3 - Per Mile per month			ULDD3, UNC3X	1L5NC	7.96										
	Local Channel - Dedicated - DS3 - Facility Termination			ULDD3, UNC3X	ULDF3	479.02										
	Local Channel - Dedicated - STS-1- Per Mile per month			ULDS1, UNCSX	1L5NC	7.96										
	Local Channel - Dedicated - STS-1 - Facility Termination			ULDS1, UNCSX	ULDFS	469.76										
ENHANCED EXTENDED LINK (EELs)																
	NOTE: The monthly recurring and non-recurring charges below will apply and the Switch-As-Is Charge will not apply for UNE combinations provisioned as ' Ordinarily Combined' Network Elements.															
	NOTE: The monthly recurring and the Switch-As-Is Charge and not the non-recurring charges below will apply for UNE combinations provisioned as ' Currently Combined' Network Elements.															
	2-WIRE VOICE GRADE LOOP FOR USE IN A COMBINATION															
	2-Wire VG Loop (SL2) in Combination - Zone 1		1	UNCVX	UEAL2	16.54										
	2-Wire VG Loop (SL2) in Combination - Zone 2		2	UNCVX	UEAL2	26.28										
	2-Wire VG Loop (SL2) in Combination - Zone 3		3	UNCVX	UEAL2	41.56										
	Voice Grade COCI - Per Month			UNCVX	1D1VG	0.61										
	4-WIRE VOICE GRADE LOOP FOR USE IN A COMBINATION															
	4-Wire Analog Voice Grade Loop in Combination - Zone 1		1	UNCVX	UEAL4	29.14										
	4-Wire Analog Voice Grade Loop in Combination - Zone 2		2	UNCVX	UEAL4	44.37										
	4-Wire Analog Voice Grade Loop in Combination - Zone 3		3	UNCVX	UEAL4	69.02										
	Voice Grade COCI in combination - per month			UNCVX	1D1VG	0.61										
	4-WIRE 56 KBPS DIGITAL LOOP FOR USE IN A COMBINATION															
	4-Wire 56Kbps Digital Grade Loop in Combination - Zone 1		1	UNCDX	UDL56	30.00										
	4-Wire 56Kbps Digital Grade Loop in Combination - Zone 2		2	UNCDX	UDL56	41.34										
	4-Wire 56Kbps Digital Grade Loop in Combination - Zone 3		3	UNCDX	UDL56	43.56										
	OCU-DP COCI (data) per month (2.4-64kbs)			UNCDX	1D1DD	1.29										
	4-WIRE 64 KBPS DIGITAL LOOP FOR USE IN A COMBINATI\ON															
	4-Wire 64Kbps Digital Grade Loop in Combination - Zone 1		1	UNCDX	UDL64	30.00										
	4-Wire 64Kbps Digital Grade Loop in Combination - Zone 2		2	UNCDX	UDL64	41.34										
	4-Wire 64Kbps Digital Grade Loop in Combination - Zone 3		3	UNCDX	UDL64	43.56										
	OCU-DP COCI (data) - in combination - per month (2.4-64kbs)			UNCDX	1D1DD	1.29										
	2-WIRE ISDN LOOP FOR USE IN COMBINATION															
	2-Wire ISDN Loop in Combination - Zone 1		1	UNCNX	U1L2X	25.16										
	2-Wire ISDN Loop in Combination - Zone 2		2	UNCNX	U1L2X	37.78										
	2-Wire ISDN Loop in Combination - Zone 3		3	UNCNX	U1L2X	55.83										
	2-wire ISDN COCI (BRITE) - in combination - per month			UNCNX	UC1CA	2.77										
	4-WIRE DS1 DIGITAL LOOP FOR USE IN A COMBINATION															
	4-Wire DS1 Digital Loop in Combination - Zone 1		1	UNC1X	USLXX	94.93										
	4-Wire DS1 Digital Loop in Combination - Zone 2		2	UNC1X	USLXX	177.31										
	4-Wire DS1 Digital Loop in Combination - Zone 3		3	UNC1X	USLXX	361.70										
	DS1 COCI in combination per month			UNC1X	UC1D1	14.60										
	2 WIRE VOICE GRADE INTEROFFICE TRANSPORT FOR USE IN A COMBINATION															
	Interoffice Transport - 2-wire VG - Dedicated- Per Mile Per Month			UNCVX	1L5XX	0.01										
	Interoffice Transport - 2-wire VG - Dedicated - Facility Termination per month			UNCVX	U1TV2	24.30										
	4 WIRE VOICE GRADE INTEROFFICE TRANSPORT FOR USE IN A COMBINATION															
	Interoffice Transport - 4-wire VG - Dedicated - Per Mile Per Month			UNCVX	1L5XX	0.01										
	Interoffice Transport - 4-wire VG - Dedicated - Facility Termination per month			UNCVX	U1TV4	21.54										
	DS1 INTEROFFICE TRANSPORT FOR COMBINATION															
	Interoffice Transport - Dedicated - DS1 combination - Per Mile per month			UNC1X	1L5XX	0.21										
	Interoffice Transport - Dedicated - DS1 combination - Facility Termination per month			UNC1X	U1TF1	69.18										
	DS3 INTEROFFICE TRANSPORT FOR USE IN A COMBINATION															
	Interoffice Transport - Dedicated - DS3 combination - Per Mile Per Month			UNC3X	1L5XX	4.70										

CATEGORY	RATE ELEMENTS	Interim	Zone	BCS	USOC	RATES ($)					Svc Order Submitted Elec per LSR	Svc Order Submitted Manually per LSR	Incremental Charge - Manual Svc Order vs. Electronic-1st	Incremental Charge - Manual Svc Order vs. Electronic-Add'l	Incremental Charge - Manual Svc Order vs. Electronic-Disc 1st	Incremental Charge - Manual Svc Order vs. Electronic-Disc Add'l
						Rec	Nonrecurring		Nonrecurring Disconnect		OSS Rates ($)					
							First	Add'l	First	Add'l	SOMEC	SOMAN	SOMAN	SOMAN	SOMAN	SOMAN
	Interoffice Transport - Dedicated - DS3 - Facility Termination per month			UNC3X	U1TF3	809.05										
	STS-1 INTEROFFICE TRANSPORT FOR USE IN COMBINATION															
	Interoffice Transport - Dedicated - STS-1 combination - Per Mile Per Month			UNCSX	1L5XX	4.70										
	Interoffice Transport - Dedicated - STS-1 combination - Facility Termination per month			UNCSX	U1TFS	806.58										
	4-WIRE 56 KBPS DIGITAL LOOP WITH 56 KBPS INTEROFFICE TRANSPORT															
	4-wire 56 kbps Local Loop in combination - Zone 1		1	UNCDX	UDL56	30.00										
	4-wire 56 kbps Local Loop in combination - Zone 2		2	UNCDX	UDL56	41.34										
	4-wire 56 kbps Local Loop in combination - Zone 3		3	UNCDX	UDL56	43.56										
	Interoffice Transport - Dedicated - 4-wire 56 kbps combination - Per Mile per month			UNCDX	1L5XX	0.01										
	Interoffice Transport - Dedicated - 4-wire 56 kbps combination - Facility Termination per month			UNCDX	U1TD5	17.39										
	4-WIRE 64 KBPS DIGITAL EXTENDED LOOP WITH 64 KBPS INTEROFFICE TRANSPORT															
	4-wire 64 kbps Lcoal Loop in Combination - Zone 1		1	UNCDX	UDL64	30.00										
	4-wire 64 kbps Lcoal Loop in Combination - Zone 2		2	UNCDX	UDL64	41.34										
	4-wire 64 kbps Lcoal Loop in Combination - Zone 3		3	UNCDX	UDL64	43.56										
	Interoffice Transport - Dedicated - 4-wire 64 kbps combination - Per Mile per month			UNCDX	1L5XX	0.01										
	Interoffice Transport - Dedicated - 4-wire 64 kbps combination - Facility Termination per month			UNCDX	U1TD6	17.39										
	4-WIRE 56 KBPS DIGITAL EXTENDED LOOP WITH DS0 INTEROFFICE TRANSPORT															
	4-wire 56 kbps Local Loop in combination - Zone 1		1	UNCDX	UDL56	30.00										
	4-wire 56 kbps Local Loop in combination - Zone 2		2	UNCDX	UDL56	41.34										
	4-wire 56 kbps Local Loop in combination - Zone 3		3	UNCDX	UDL56	43.56										
	4-wiree 56 kbps Interoffice Transport - Dedicated - Per Mile per month			UNCDX	1L5XX	0.01										
	4-wire 56 kbps Interoffice Transport - Dedicated - Facility Termination per month			UNCDX	U1TD5	17.39										
	4-WIRE 64 KBPS DIGITAL EXTENDED LOOP WITH DS0 INTEROFFICE TRANSPORT															
	4-wire 64 kbps Local Loop in combination - Zone 1		1	UNCDX	UDL64	30.00										
	4-wire 64 kbps Local Loop in combination - Zone 2		2	UNCDX	UDL64	41.34										
	4-wire 64 kbps Local Loop in combination - Zone 3		3	UNCDX	UDL64	43.56										
	I4-wire 65 kbps Interoffice Transport - Dedicated - Per Mile per month			UNCDX	1L5XX	0.01										
	4-wire 64 kbps Interoffice Transport - Dedicated - Facility Termination per month			UNCDX	U1TD6	17.39										
	DS1 DIGITAL LOOP AND DS1 INTERFOFFICE TRANSPORT															
	4-Wire DS1 Digital Loop in Combination - Zone 1		1	UNC1X	USLXX	94.93										
	4-Wire DS1 Digital Loop in Combination - Zone 2		2	UNC1X	USLXX	177.31										
	4-Wire DS1 Digital Loop in Combination - Zone 3		3	UNC1X	USLXX	361.70										
	Interoffice Transport - Dedicated - DS1 combination - Per Mile per month			UNC1X	1L5XX	0.21										
	Interoffice Transport - Dedicated - DS1 combination - Facility Termination per month			UNC1X	U1TF1	69.18										
	DS3 DIGITAL LOOP WITH DEDICATED DS3 INTEROFFICE TRANSPORT															
	DS3 Local Loop in combination - per mile per month			UNC3X	1L5ND	11.08										
	DS3 Local Loop in combination - Facility Termination per month			UNC3X	UE3PX	408.63										
	Interoffice Transport - Dedicated - DS3 - Per Mile per month			UNC3X	1L5XX	4.70										
	Interoffice Transport - Dedicated - DS3 combination - Facility Termination per month			UNC3X	U1TF3	809.05										
	STS-1 DIGITAL LOOP WITH DEDICATED STS-1 INTEROFFICE TRANSPORT															
	STS-1 Local Lolp in combination - per mile per month			UNCSX	1L5ND	11.08										
	STS-1 Local Loop in combination - Facility Termination per month			UNCSX	UDLS1	422.98										

UNBUNDLED NETWORK ELEMENTS - Alabama														Attachment: 2 Exh. B			
CATEGORY		RATE ELEMENTS	Interim	Zone	BCS	USOC	RATES ($)					Svc Order Submitted Elec per LSR	Svc Order Submitted Manually per LSR	Incremental Charge - Manual Svc Order vs. Electronic-1st	Incremental Charge - Manual Svc Order vs. Electronic-Add'l	Incremental Charge - Manual Svc Order vs. Electronic-Disc 1st	Incremental Charge - Manual Svc Order vs. Electronic-Disc Add'l
							Rec	Nonrecurring		Nonrecurring Disconnect		OSS Rates ($)					
								First	Add'l	First	Add'l	SOMEC	SOMAN	SOMAN	SOMAN	SOMAN	SOMAN
		Interoffice Transport - Dedicated - STS-1 combination - per mile per month			UNCSX	1L5XX	4.70										
		Interoffice Transport - Dedicated - STS-1 combination - Facility Termination per month			UNCSX	U1TFS	806.58										
ADDITIONAL NETWORK ELEMENTS																	
	When used as a part of a currently combined facility, the non-recurrng charges do not apply, but a Switch As Is charge does apply.																
	When used as ordinarily combined network elements in All States, the non-recurring charges apply and the Switch As Is Charge does not.																
	Nonrecurring Currently Combined Network Elements "Switch As Is" Charge (One applies to each combination)																
	Optional Features & Functions:																
		Clear Channel Capability Extended Frame Option - per DS1	I		U1TD1, ULDD1,UNC1X	CCOEF		0.00	0.00	0.00	0.00						
		Clear Channel Capability Super FrameOption - per DS1	I		U1TD1, ULDD1,UNC1X	CCOSF		0.00	0.00	0.00	0.00						
		Clear Channel Capability (SF/ESF) Option - Subsequent Activity - per DS1	I		ULDD1, U1TD1, UNC1X, USL	NRCCC		184.85	23.81	1.99	0.7741						
		C-bit Parity Option - Subsequent Activity - per DS3	i		U1TD3, ULDD3, UE3, UNC3X	NRCC3		219.13	7.67	0.7355	0.00						
	MULTIPLEXERS																
		DS1 to DS0 Channel System per month			UNC1X	MQ1	116.22										
		OCU-DP COCI (data) - DS1 to DS0 Channel System - per month (2.4-64kbs) used for a Local Loop			UDL	1D1DD	1.29										
		OCU-DP COCI (data) - DS1 to DS0 Channel System - per month (2.4-64kbs) used for connection to a channelized DS1 Local Channel in the same SWC as collocation			U1TUD	1D1DD	1.29										
		2-wire ISDN COCI (BRITE) - DS1 to DS0 Channel Systsem - per month for a Local Loop			UDN	UC1CA	2.77										
		2-wire ISDN COCI (BRITE) - DS1 to DS0 Channel Systsem - per month used for connection to a channelized DS1 Local Channel in the same SWC as collocation			U1TUB	UC1CA	2.77										
		Voice Grade COCI - DS1 to DS0 Channel System - per month used for a Local Loop			UEA	1D1VG	0.61										
		Voice Grade COCI - DS1 to DS0 Channel System - per month used for connection to a channelized DS1 Local Channel in the same SWC as collocation			U1TUC	1D1VG	0.61										
		DS3 to DS1 Channel System per month			UNC3X	MQ3	191.05										
		STS-1 to DS1 Channel System per month			UNCSX	MQ3	191.05										
		DS1 COCI used with Loop per month			USL	UC1D1	14.60										
		DS1 COCI (used for connection to a channelized DS1 Local Channel in the same SWC as collocation) per month			U1TUA	UC1D1	14.60										
		DS1 COCI used with Interoffice Channel per month			U1TD1	UC1D1	14.60										
		DS3 Interface Unit (DS1 COCI) used with Local Channel per month			ULDD1	UC1D1	14.60										

UNBUNDLED NETWORK ELEMENTS - Florida														Attachment: 2 Exh. B			
CATEGORY		RATE ELEMENTS	Interim	Zone	BCS	USOC	RATES ($)					Svc Order Submitted Elec per LSR	Svc Order Submitted Manually per LSR	Incremental Charge - Manual Svc Order vs. Electronic-1st	Incremental Charge - Manual Svc Order vs. Electronic-Add'l	Incremental Charge - Manual Svc Order vs. Electronic-Disc 1st	Incremental Charge - Manual Svc Order vs. Electronic-Disc Add'l
							Rec	Nonrecurring		Nonrecurring Disconnect		OSS Rates ($)					
								First	Add'l	First	Add'l	SOMEC	SOMAN	SOMAN	SOMAN	SOMAN	SOMAN
UNBUNDLED EXCHANGE ACCESS LOOP																	
	2-WIRE HIGH BIT RATE DIGITAL SUBSCRIBER LINE (HDSL) COMPATIBLE LOOP																
		2 Wire Unbundled HDSL Loop including manual service inquiry & facility reservation - Zone 1		1	UHL	UHL2X	8.30	159.09	113.41	75.05	15.63						
		2 Wire Unbundled HDSL Loop including manual service inquiry & facility reservation - Zone 2		2	UHL	UHL2X	11.80	159.09	113.41	75.05	15.63						
		2 Wire Unbundled HDSL Loop including manual service inquiry & facility reservation - Zone 3		3	UHL	UHL2X	20.94	159.09	113.41	75.05	15.63						
		2 Wire Unbundled HDSL Loop without manual service inquiry and facility reservation - Zone 1		1	UHL	UHL2W	8.30	134.40	80.69	60.64	9.12						
		2 Wire Unbundled HDSL Loop without manual service inquiry and facility reservation - Zone 2		2	UHL	UHL2W	11.80	134.40	80.69	60.64	9.12						
		2 Wire Unbundled HDSL Loop without manual service inquiry and facility reservation - Zone 3		3	UHL	UHL2W	20.94	134.40	80.69	60.64	9.12						
	4-WIRE HIGH BIT RATE DIGITAL SUBSCRIBER LINE (HDSL) COMPATIBLE LOOP																
		4 Wire Unbundled HDSL Loop including manual service inquiry and facility reservation - Zone 1		1	UHL	UHL4X	12.49	193.31	138.98	77.15	12.61						
		4-Wire Unbundled HDSL Loop including manual service inquiry and facility reservation - Zone 2		2	UHL	UHL4X	17.76	193.31	138.98	77.15	12.61						
		4-Wire Unbundled HDSL Loop including manual service inquiry and facility reservation - Zone 3		3	UHL	UHL4X	31.50	193.31	138.98	77.15	12.61						
		4-Wire Unbundled HDSL Loop without manual service inquiry and facility reservation - Zone 1		1	UHL	UHL4W	12.49	168.62	115.47	62.74	11.22						
		4-Wire Unbundled HDSL Loop without manual service inquiry and facility reservation - Zone 2		2	UHL	UHL4W	17.76	168.62	115.47	62.74	11.22						
		4-Wire Unbundled HDSL Loop without manual service inquiry and facility reservation - Zone 3		3	UHL	UHL4W	31.50	168.62	115.47	62.74	11.22						
	4-WIRE DS1 DIGITAL LOOP																
		4-Wire DS1 Digital Loop - Zone 1		1	USL	USLXX	81.35	313.75	181.48	61.22	13.53						
		4-Wire DS1 Digital Loop - Zone 2		2	USL	USLXX	115.62	313.75	181.48	61.22	13.53						
		4-Wire DS1 Digital Loop - Zone 3		3	USL	USLXX	205.15	313.75	181.48	61.22	13.53						
HIGH CAPACITY UNBUNDLED LOCAL LOOP																	
		High Capacity Unbundled Local Loop - DS3 - Per Mile per month			UE3	1L5ND	12.56										
		High Capacity Unbundled Local Loop - DS3 - Facility Termination per month			UE3	UE3PX	444.91										
		High Capacity Unbundled Local Loop - STS-1 - Per Mile per month			UDLSX	1L5ND	12.56										
		High Capacity Unbundled Local Loop - STS-1 - Facility Termination per month			UDLSX	UDLS1	490.59										
UNBUNDLED DEDICATED TRANSPORT																	
	INTEROFFICE CHANNEL - DEDICATED TRANSPORT																
		Interoffice Channel - Dedicated Channel - DS1 - Per Mile per month			U1TD1	1L5XX	0.21										
		Interoffice Channel - Dedicated Tranport - DS1 - Facility Termination			U1TD1	U1TF1	101.71										
		Interoffice Channel - Dedicated Transport - DS3 - Per Mile per month			U1TD3	1L5XX	4.45										
		Interoffice Channel - Dedicated Transport - DS3 - Facility Termination per month			U1TD3	U1TF3	1231.65										
		Interoffice Channel - Dedicated Transport - STS-1 - Per Mile per month			U1TS1	1L5XX	4.45										
		Interoffice Channel - Dedicated Transport - STS-1 - Facility Termination			U1TS1	U1TFS	1214.40										
		Local Channel - Dedicated - 2-Wire Voice Grade - Zone 1		1	ULDVX, UNCVX	ULDV2	22.61										
		Local Channel - Dedicated - 2-Wire Voice Grade - Zone 2		2	ULDVX, UNCVX	ULDV2	32.13										
		Local Channel - Dedicated - 2-Wire Voice Grade - Zone 3		3	ULDVX, UNCVX	ULDV2	57.02										

UNBUNDLED NETWORK ELEMENTS - Florida														Attachment: 2 Exh. B			
CATEGORY		RATE ELEMENTS	Interim	Zone	BCS	USOC	RATES ($)					Svc Order Submitted Elec per LSR	Svc Order Submitted Manually per LSR	Incremental Charge - Manual Svc Order vs. Electronic-1st	Incremental Charge - Manual Svc Order vs. Electronic-Add'l	Incremental Charge - Manual Svc Order vs. Electronic-Disc 1st	Incremental Charge - Manual Svc Order vs. Electronic-Disc Add'l
							Rec	Nonrecurring		Nonrecurring Disconnect		OSS Rates ($)					
								First	Add'l	First	Add'l	SOMEC	SOMAN	SOMAN	SOMAN	SOMAN	SOMAN
		Local Channel - Dedicated - 2-Wire Voice Grade Rev. Bat. - Zone 1		1	ULDVX	ULDR2	22.61										
		Local Channel - Dedicated - 2-Wire Voice Grade Rev. Bat. - Zone 2		2	ULDVX	ULDR2	32.13										
		Local Channel - Dedicated - 2-Wire Voice Grade Rev. Bat. - Zone 3		3	ULDVX	ULDR2	57.02										
		Local Channel - Dedicated - 4-Wire Voice Grade - Zone 1		1	ULDVX, UNCVX	ULDV4	23.52										
		Local Channel - Dedicated - 4-Wire Voice Grade - Zone 2		2	ULDVX, UNCVX	ULDV4	33.42										
		Local Channel - Dedicated - 4-Wire Voice Grade - Zone 3		3	ULDVX, UNCVX	ULDV4	59.29										
		Local Channel - Dedicated - DS1 - Zone 1		1	ULDD1, UNC1X	ULDF1	41.96										
		Local Channel - Dedicated - DS1 - Zone 2		2	ULDD1, UNC1X	ULDF1	59.63										
		Local Channel - Dedicated - DS1 - Zone 3		3	ULDD1, UNC1X	ULDF1	105.80										
		Local Channel - Dedicated - DS3 - Per Mile per month			ULDD3, UNC3X	1L5NC	9.78										
		Local Channel - Dedicated - DS3 - Facility Termination			ULDD3, UNC3X	ULDF3	611.70										
		Local Channel - Dedicated - STS-1- Per Mile per month			ULDS1, UNCSX	1L5NC	9.78										
		Local Channel - Dedicated - STS-1 - Facility Termination			ULDS1, UNCSX	ULDFS	621.79										
ENHANCED EXTENDED LINK (EELs)																	
	NOTE: The monthly recurring and non-recurring charges below will apply and the Switch-As-Is Charge will not apply for UNE combinations provisioned as ' Ordinarily Combined' Network Elements.																
	NOTE: The monthly recurring and the Switch-As-Is Charge and not the non-recurring charges below will apply for UNE combinations provisioned as ' Currently Combined' Network Elements.																
	2-WIRE VOICE GRADE LOOP FOR USE IN A COMBINATION																
		2-Wire VG Loop (SL2) in Combination - Zone 1		1	UNCVX	UEAL2	14.08										
		2-Wire VG Loop (SL2) in Combination - Zone 2		2	UNCVX	UEAL2	20.01										
		2-Wire VG Loop (SL2) in Combination - Zone 3		3	UNCVX	UEAL2	35.50										
		Voice Grade COCI - Per Month			UNCVX	1D1VG	1.59										
	4-WIRE VOICE GRADE LOOP FOR USE IN A COMBINATION																
		4-Wire Analog Voice Grade Loop in Combination - Zone 1		1	UNCVX	UEAL4	21.72										
		4-Wire Analog Voice Grade Loop in Combination - Zone 2		2	UNCVX	UEAL4	30.87										
		4-Wire Analog Voice Grade Loop in Combination - Zone 3		3	UNCVX	UEAL4	54.76										
		Voice Grade COCI in combination - per month			UNCVX	1D1VG	1.59										
	4-WIRE 56 KBPS DIGITAL LOOP FOR USE IN A COMBINATION																
		4-Wire 56Kbps Digital Grade Loop in Combination - Zone 1		1	UNCDX	UDL56	25.53										
		4-Wire 56Kbps Digital Grade Loop in Combination - Zone 2		2	UNCDX	UDL56	36.29										
		4-Wire 56Kbps Digital Grade Loop in Combination - Zone 3		3	UNCDX	UDL56	64.39										
		OCU-DP COCI (data) per month (2.4-64kbs)			UNCDX	1D1DD	2.42										
	4-WIRE 64 KBPS DIGITAL LOOP FOR USE IN A COMBINATI\ON																
		4-Wire 64Kbps Digital Grade Loop in Combination - Zone 1		1	UNCDX	UDL64	25.53										
		4-Wire 64Kbps Digital Grade Loop in Combination - Zone 2		2	UNCDX	UDL64	36.29										
		4-Wire 64Kbps Digital Grade Loop in Combination - Zone 3		3	UNCDX	UDL64	64.39										
		OCU-DP COCI (data) - in combination - per month (2.4-64kbs)			UNCDX	1D1DD	2.42										
	2-WIRE ISDN LOOP FOR USE IN COMBINATION																
		2-Wire ISDN Loop in Combination - Zone 1		1	UNCNX	U1L2X	22.17										
		2-Wire ISDN Loop in Combination - Zone 2		2	UNCNX	U1L2X	31.51										
		2-Wire ISDN Loop in Combination - Zone 3		3	UNCNX	U1L2X	55.91										
		2-wire ISDN COCI (BRITE) - in combination - per month			UNCNX	UC1CA	4.21										
	4-WIRE DS1 DIGITAL LOOP FOR USE IN A COMBINATION																
		4-Wire DS1 Digital Loop in Combination - Zone 1		1	UNC1X	USLXX	81.35										
		4-Wire DS1 Digital Loop in Combination - Zone 2		2	UNC1X	USLXX	115.62										
		4-Wire DS1 Digital Loop in Combination - Zone 3		3	UNC1X	USLXX	205.15										
		DS1 COCI in combination per month			UNC1X	UC1D1	15.82										
	2 WIRE VOICE GRADE INTEROFFICE TRANSPORT FOR USE IN A COMBINATION																
		Interoffice Transport - 2-wire VG - Dedicated- Per Mile Per Month			UNCVX	1L5XX	0.01										
		Interoffice Transport - 2-wire VG - Dedicated - Facility Termination per month			UNCVX	U1TV2	29.12										
	4 WIRE VOICE GRADE INTEROFFICE TRANSPORT FOR USE IN A COMBINATION																
		Interoffice Transport - 4-wire VG - Dedicated - Per Mile Per Month			UNCVX	1L5XX	0.01										
		Interoffice Transport - 4-wire VG - Dedicated - Facility Termination per month			UNCVX	U1TV4	25.97										

CATEGORY	RATE ELEMENTS	Interim	Zone	BCS	USOC	RATES ($)					Svc Order Submitted Elec per LSR	Svc Order Submitted Manually per LSR	Incremental Charge - Manual Svc Order vs. Electronic-1st	Incremental Charge - Manual Svc Order vs. Electronic-Add'l	Incremental Charge - Manual Svc Order vs. Electronic-Disc 1st	Incremental Charge - Manual Svc Order vs. Electronic-Disc Add'l
						Rec	Nonrecurring		Nonrecurring Disconnect		OSS Rates ($)					
							First	Add'l	First	Add'l	SOMEC	SOMAN	SOMAN	SOMAN	SOMAN	SOMAN
	DS1 INTEROFFICE TRANSPORT FOR COMBINATION															
	Interoffice Transport - Dedicated - DS1 combination - Per Mile per month			UNC1X	1L5XX	0.21										
	Interoffice Transport - Dedicated - DS1 combination - Facility Termination per month			UNC1X	U1TF1	101.71										
	DS3 INTEROFFICE TRANSPORT FOR USE IN A COMBINATION															
	Interoffice Transport - Dedicated - DS3 combination - Per Mile Per Month			UNC3X	1L5XX	4.45										
	Interoffice Transport - Dedicated - DS3 - Facility Termination per month			UNC3X	U1TF3	1231.65										
	STS-1 INTEROFFICE TRANSPORT FOR USE IN COMBINATION															
	Interoffice Transport - Dedicated - STS-1 combination - Per Mile Per Month			UNCSX	1L5XX	4.45										
	Interoffice Transport - Dedicated - STS-1 combination - Facility Termination per month			UNCSX	U1TFS	1214.40										
	4-WIRE 56 KBPS DIGITAL LOOP WITH 56 KBPS INTEROFFICE TRANSPORT															
	4-wire 56 kbps Local Loop in combination - Zone 1		1	UNCDX	UDL56	25.53										
	4-wire 56 kbps Local Loop in combination - Zone 2		2	UNCDX	UDL56	36.29										
	4-wire 56 kbps Local Loop in combination - Zone 3		3	UNCDX	UDL56	64.39										
	Interoffice Transport - Dedicated - 4-wire 56 kbps combination - Per Mile per month			UNCDX	1L5XX	0.01										
	Interoffice Transport - Dedicated - 4-wire 56 kbps combination - Facility Termination per month			UNCDX	U1TD5	21.21										
	4-WIRE 64 KBPS DIGITAL EXTENDED LOOP WITH 64 KBPS INTEROFFICE TRANSPORT															
	4-wire 64 kbps Lcoal Loop in Combination - Zone 1		1	UNCDX	UDL64	25.53										
	4-wire 64 kbps Lcoal Loop in Combination - Zone 2		2	UNCDX	UDL64	36.29										
	4-wire 64 kbps Lcoal Loop in Combination - Zone 3		3	UNCDX	UDL64	64.39										
	Interoffice Transport - Dedicated - 4-wire 64 kbps combination - Per Mile per month			UNCDX	1L5XX	0.01										
	Interoffice Transport - Dedicated - 4-wire 64 kbps combination - Facility Termination per month			UNCDX	U1TD6	21.21										
	4-WIRE 56 KBPS DIGITAL EXTENDED LOOP WITH DS0 INTEROFFICE TRANSPORT															
	4-wire 56 kbps Local Loop in combination - Zone 1		1	UNCDX	UDL56	25.53										
	4-wire 56 kbps Local Loop in combination - Zone 2		2	UNCDX	UDL56	36.29										
	4-wire 56 kbps Local Loop in combination - Zone 3		3	UNCDX	UDL56	64.39										
	4-wiree 56 kbps Interoffice Transport - Dedicated - Per Mile per month			UNCDX	1L5XX	0.01										
	4-wire 56 kbps Interoffice Transport - Dedicated - Facility Termination per month			UNCDX	U1TD5	21.21										
	4-WIRE 64 KBPS DIGITAL EXTENDED LOOP WITH DS0 INTEROFFICE TRANSPORT															
	4-wire 64 kbps Local Loop in combination - Zone 1		1	UNCDX	UDL64	25.53										
	4-wire 64 kbps Local Loop in combination - Zone 2		2	UNCDX	UDL64	36.29										
	4-wire 64 kbps Local Loop in combination - Zone 3		3	UNCDX	UDL64	64.39										
	I4-wire 65 kbps Interoffice Transport - Dedicated - Per Mile per month			UNCDX	1L5XX	0.01										
	4-wire 64 kbps Interoffice Transport - Dedicated - Facility Termination per month			UNCDX	U1TD6	21.21										
	DS1 DIGITAL LOOP AND DS1 INTERFOFFICE TRANSPORT															
	4-Wire DS1 Digital Loop in Combination - Zone 1		1	UNC1X	USLXX	81.35										
	4-Wire DS1 Digital Loop in Combination - Zone 2		2	UNC1X	USLXX	115.62										
	4-Wire DS1 Digital Loop in Combination - Zone 3		3	UNC1X	USLXX	205.15										
	Interoffice Transport - Dedicated - DS1 combination - Per Mile per month			UNC1X	1L5XX	0.21										
	Interoffice Transport - Dedicated - DS1 combination - Facility Termination per month			UNC1X	U1TF1	101.71										
	DS3 DIGITAL LOOP WITH DEDICATED DS3 INTEROFFICE TRANSPORT															
	DS3 Local Loop in combination - per mile per month			UNC3X	1L5ND	14.44										
	DS3 Local Loop in combination - Facility Termination per month			UNC3X	UE3PX	511.65										

UNBUNDLED NETWORK ELEMENTS - Florida

Attachment: 2 Exh. B

CATEGORY	RATE ELEMENTS	Interim	Zone	BCS	USOC	RATES ($)					Svc Order Submitted Elec per LSR	Svc Order Submitted Manually per LSR	Incremental Charge - Manual Svc Order vs. Electronic-1st	Incremental Charge - Manual Svc Order vs. Electronic-Add'l	Incremental Charge - Manual Svc Order vs. Electronic-Disc 1st	Incremental Charge - Manual Svc Order vs. Electronic-Disc Add'l
						Rec	Nonrecurring		Nonrecurring Disconnect		OSS Rates ($)					
							First	Add'l	First	Add'l	SOMEC	SOMAN	SOMAN	SOMAN	SOMAN	SOMAN
	Interoffice Transport - Dedicated - DS3 - Per Mile per month			UNC3X	1L5XX	4.45										
	Interoffice Transport - Dedicated - DS3 combination - Facility Termination per month			UNC3X	U1TF3	1231.65										
	STS-1 DIGITAL LOOP WITH DEDICATED STS-1 INTEROFFICE TRANSPORT															
	STS-1 Local Lolp in combination - per mile per month			UNCSX	1L5ND	14.44										
	STS-1 Local Loop in combination - Facility Termination per month			UNCSX	UDLS1	564.18										
	Interoffice Transport - Dedicated - STS-1 combination - per mile per month			UNCSX	1L5XX	4.45										
	Interoffice Transport - Dedicated - STS-1 combination - Facility Termination per month			UNCSX	U1TFS	1214.40										
ADDITIONAL NETWORK ELEMENTS																
	When used as a part of a currently combined facility, the non-recurrng charges do not apply, but a Switch As Is charge does apply.															
	When used as ordinarily combined network elements in All States, the non-recurring charges apply and the Switch As Is Charge does not.															
	Nonrecurring Currently Combined Network Elements "Switch As Is" Charge (One applies to each combination)															
	Optional Features & Functions:															
	Clear Channel Capability Extended Frame Option - per DS1	I		U1TD1, ULDD1,UNC1X	CCOEF		0.00	0.00	0.00	0.00						
	Clear Channel Capability Super FrameOption - per DS1	I		U1TD1, ULDD1,UNC1X	CCOSF		0.00	0.00	0.00	0.00						
	Clear Channel Capability (SF/ESF) Option - Subsequent Activity - per DS1	I		ULDD1, U1TD1, UNC1X, USL	NRCCC		184.92	23.82	2.07	0.80						
	C-bit Parity Option - Subsequent Activity - per DS3	i		U1TD3, ULDD3, UE3, UNC3X	NRCC3		219.09	7.67	0.773	0.00						
	MULTIPLEXERS															
	DS1 to DS0 Channel System per month			UNC1X	MQ1	168.79										
	OCU-DP COCI (data) - DS1 to DS0 Channel System - per month (2.4-64kbs) used for a Local Loop			UDL	1D1DD	2.42										
	OCU-DP COCI (data) - DS1 to DS0 Channel System - per month (2.4-64kbs) used for connection to a channelized DS1 Local Channel in the same SWC as collocation			U1TUD	1D1DD	2.42										
	2-wire ISDN COCI (BRITE) - DS1 to DS0 Channel Systsem - per month for a Local Loop			UDN	UC1CA	4.21										
	2-wire ISDN COCI (BRITE) - DS1 to DS0 Channel Systsem - per month used for connection to a channelized DS1 Local Channel in the same SWC as collocation			U1TUB	UC1CA	4.21										
	Voice Grade COCI - DS1 to DS0 Channel System - per month used for a Local Loop			UEA	1D1VG	1.59										
	Voice Grade COCI - DS1 to DS0 Channel System - per month used for connection to a channelized DS1 Local Channel in the same SWC as collocation			U1TUC	1D1VG	1.59										
	DS3 to DS1 Channel System per month			UNC3X	MQ3	242.87										
	STS-1 to DS1 Channel System per month			UNCSX	MQ3	242.87										
	DS1 COCI used with Loop per month			USL	UC1D1	15.82										
	DS1 COCI (used for connection to a channelized DS1 Local Channel in the same SWC as collocation) per month			U1TUA	UC1D1	15.82										
	DS1 COCI used with Interoffice Channel per month			U1TD1	UC1D1	15.82										
	DS3 Interface Unit (DS1 COCI) used with Local Channel per month			ULDD1	UC1D1	15.82										

UNBUNDLED NETWORK ELEMENTS - Georgia

Attachment: 2 Exh. B

CATEGORY	RATE ELEMENTS	Interim	Zone	BCS	USOC	RATES ($) Rec	Nonrecurring First	Nonrecurring Add'l	Nonrecurring Disconnect First	Nonrecurring Disconnect Add'l	Svc Order Submitted Elec per LSR	Svc Order Submitted Manually per LSR	Incremental Charge - Manual Svc Order vs. Electronic-1st	Incremental Charge - Manual Svc Order vs. Electronic-Add'l	Incremental Charge - Manual Svc Order vs. Electronic-Disc 1st	Incremental Charge - Manual Svc Order vs. Electronic-Disc Add'l
											OSS Rates ($)					
											SOMEC	SOMAN	SOMAN	SOMAN	SOMAN	SOMAN
UNBUNDLED EXCHANGE ACCESS LOOP																
2-WIRE HIGH BIT RATE DIGITAL SUBSCRIBER LINE (HDSL) COMPATIBLE LOOP																
	2 Wire Unbundled HDSL Loop including manual service inquiry & facility reservation - Zone 1	I	1	UHL	UHL2X	9.06	44.69	31.55	0.00	0.00						
	2 Wire Unbundled HDSL Loop including manual service inquiry & facility reservation - Zone 2	I	2	UHL	UHL2X	10.45	44.69	31.55	0.00	0.00						
	2 Wire Unbundled HDSL Loop including manual service inquiry & facility reservation - Zone 3	I	3	UHL	UHL2X	16.65	44.69	31.55	0.00	0.00						
	2 Wire Unbundled HDSL Loop without manual service inquiry and facility reservation - Zone 1	I	1	UHL	UHL2W	9.06	44.69	31.55	0.00	0.00						
	2 Wire Unbundled HDSL Loop without manual service inquiry and facility reservation - Zone 2	I	2	UHL	UHL2W	10.45	44.69	31.55	0.00	0.00						
	2 Wire Unbundled HDSL Loop without manual service inquiry and facility reservation - Zone 3	I	3	UHL	UHL2W	16.65	44.69	31.55	0.00	0.00						
4-WIRE HIGH BIT RATE DIGITAL SUBSCRIBER LINE (HDSL) COMPATIBLE LOOP																
	4 Wire Unbundled HDSL Loop including manual service inquiry and facility reservation - Zone 1	I	1	UHL	UHL4X	11.95	44.69	31.55	0.00	0.00						
	4-Wire Unbundled HDSL Loop including manual service inquiry and facility reservation - Zone 2	I	2	UHL	UHL4X	13.80	44.69	31.55	0.00	0.00						
	4-Wire Unbundled HDSL Loop including manual service inquiry and facility reservation - Zone 3	I	3	UHL	UHL4X	21.93	44.69	31.55	0.00	0.00						
	4-Wire Unbundled HDSL Loop without manual service inquiry and facility reservation - Zone 1	I	1	UHL	UHL4W	11.95	44.69	31.55	0.00	0.00						
	4-Wire Unbundled HDSL Loop without manual service inquiry and facility reservation - Zone 2	I	2	UHL	UHL4W	13.80	44.69	31.55	0.00	0.00						
	4-Wire Unbundled HDSL Loop without manual service inquiry and facility reservation - Zone 3	I	3	UHL	UHL4W	21.93	44.69	31.55	0.00	0.00						
4-WIRE DS1 DIGITAL LOOP																
	4-Wire DS1 Digital Loop - Zone 1		1	USL	USLXX	47.17	211.93	72.49	38.24	7.20						
	4-Wire DS1 Digital Loop - Zone 2		2	USL	USLXX	53.37	211.93	72.49	38.24	7.20						
	4-Wire DS1 Digital Loop - Zone 3		3	USL	USLXX	71.33	211.93	72.49	38.24	7.20						
HIGH CAPACITY UNBUNDLED LOCAL LOOP																
	High Capacity Unbundled Local Loop - DS3 - Per Mile per month			UE3	1L5ND	12.62										
	High Capacity Unbundled Local Loop - DS3 - Facility Termination per month			UE3	UE3PX	291.39										
	High Capacity Unbundled Local Loop - STS-1 - Per Mile per month			UDLSX	1L5ND	12.62										
	High Capacity Unbundled Local Loop - STS-1 - Facility Termination per month			UDLSX	UDLS1	351.23										
UNBUNDLED DEDICATED TRANSPORT																
INTEROFFICE CHANNEL - DEDICATED TRANSPORT																
	Interoffice Channel - Dedicated Channel - DS1 - Per Mile per month			U1TD1	1L5XX	0.13										
	Interoffice Channel - Dedicated Tranport - DS1 - Facility Termination			U1TD1	U1TF1	39.32										
	Interoffice Channel - Dedicated Transport - DS3 - Per Mile per month			U1TD3	1L5XX	2.91										
	Interoffice Channel - Dedicated Transport - DS3 - Facility Termination per month			U1TD3	U1TF3	393.32										
	Interoffice Channel - Dedicated Transport - STS-1 - Per Mile per month			U1TS1	1L5XX	2.92										
	Interoffice Channel - Dedicated Transport - STS-1 - Facility Termination			U1TS1	U1TFS	412.47										
	Local Channel - Dedicated - 2-Wire Voice Grade			ULDVX, UNCVX	ULDV2	8.90										
	Local Channel - Dedicated - 2-Wire Voice Grade Rev Bat			ULDVX	ULDR2	8.90										
	Local Channel - Dedicated - 4-Wire Voice Grade			ULDVX, UNCVX	ULDV4	10.03										
	Local Channel - Dedicated - DS1 Zone 1		1	ULDD1, UNC1X	ULDF1	21.24										

UNBUNDLED NETWORK ELEMENTS - Georgia														Attachment: 2 Exh. B			
CATEGORY	RATE ELEMENTS	Interim	Zone	BCS	USOC	RATES ($)					Svc Order Submitted Elec per LSR	Svc Order Submitted Manually per LSR	Incremental Charge - Manual Svc Order vs. Electronic-1st	Incremental Charge - Manual Svc Order vs. Electronic-Add'l	Incremental Charge - Manual Svc Order vs. Electronic-Disc 1st	Incremental Charge - Manual Svc Order vs. Electronic-Disc Add'l
						Rec	Nonrecurring		Nonrecurring Disconnect		OSS Rates ($)					
							First	Add'l	First	Add'l	SOMEC	SOMAN	SOMAN	SOMAN	SOMAN	SOMAN
	Local Channel - Dedicated - DS1 Zone 2		2	ULDD1, UNC1X	ULDF1	64.75										
	Local Channel - Dedicated - DS1 Zone 3		3	ULDD1, UNC1X	ULDF1	189.41										
	Local Channel - Dedicated - DS3 - Per Mile per month			ULDD3, UNC3X	1L5NC	1.66										
	Local Channel - Dedicated - DS3 - Facility Termination			ULDD3, UNC3X	ULDF3	169.06										
	Local Channel - Dedicated - STS-1- Per Mile per month			ULDS1, UNCSX	1L5NC	1.66										
	Local Channel - Dedicated - STS-1 - Facility Termination			ULDS1, UNCSX	ULDFS	177.81										
ENHANCED EXTENDED LINK (EELs)																
	NOTE: The monthly recurring and non-recurring charges below will apply and the Switch-As-Is Charge will not apply for UNE combinations provisioned as ' Ordinarily Combined' Network Elements.															
	NOTE: The monthly recurring and the Switch-As-Is Charge and not the non-recurring charges below will apply for UNE combinations provisioned as ' Currently Combined' Network Elements.															
	2-WIRE VOICE GRADE LOOP FOR USE IN A COMBINATION															
	2-Wire VG Loop (SL2) in Combination - Zone 1		1	UNCVX	UEAL2	13.31										
	2-Wire VG Loop (SL2) in Combination - Zone 2		2	UNCVX	UEAL2	19.49										
	2-Wire VG Loop (SL2) in Combination - Zone 3		3	UNCVX	UEAL2	38.04										
	Voice Grade COCI - Per Month			UNCVX	1D1VG	0.54										
	4-WIRE VOICE GRADE LOOP FOR USE IN A COMBINATION															
	4-Wire Analog Voice Grade Loop in Combination - Zone 1		1	UNCVX	UEAL4	20.47										
	4-Wire Analog Voice Grade Loop in Combination - Zone 2		2	UNCVX	UEAL4	24.93										
	4-Wire Analog Voice Grade Loop in Combination - Zone 3		3	UNCVX	UEAL4	34.79										
	Voice Grade COCI in combination - per month			UNCVX	1D1VG	0.54										
	4-WIRE 56 KBPS DIGITAL LOOP FOR USE IN A COMBINATION															
	4-Wire 56Kbps Digital Grade Loop in Combination - Zone 1		1	UNCDX	UDL56	25.14										
	4-Wire 56Kbps Digital Grade Loop in Combination - Zone 2		2	UNCDX	UDL56	32.61										
	4-Wire 56Kbps Digital Grade Loop in Combination - Zone 3		3	UNCDX	UDL56	43.95										
	OCU-DP COCI (data) per month (2.4-64kbs)			UNCDX	1D1DD	1.15										
	4-WIRE 64 KBPS DIGITAL LOOP FOR USE IN A COMBINATI\ON															
	4-Wire 64Kbps Digital Grade Loop in Combination - Zone 1		1	UNCDX	UDL64	25.14										
	4-Wire 64Kbps Digital Grade Loop in Combination - Zone 2		2	UNCDX	UDL64	32.61										
	4-Wire 64Kbps Digital Grade Loop in Combination - Zone 3		3	UNCDX	UDL64	43.95										
	OCU-DP COCI (data) - in combination - per month (2.4-64kbs)			UNCDX	1D1DD	1.15										
	2-WIRE ISDN LOOP FOR USE IN COMBINATION															
	2-Wire ISDN Loop in Combination - Zone 1		1	UNCNX	U1L2X	22.79										
	2-Wire ISDN Loop in Combination - Zone 2		2	UNCNX	U1L2X	30.20										
	2-Wire ISDN Loop in Combination - Zone 3		3	UNCNX	U1L2X	48.50										
	2-wire ISDN COCI (BRITE) - in combination - per month			UNCNX	UC1CA	1.91										
	4-WIRE DS1 DIGITAL LOOP FOR USE IN A COMBINATION															
	4-Wire DS1 Digital Loop in Combination - Zone 1		1	UNC1X	USLXX	47.17										
	4-Wire DS1 Digital Loop in Combination - Zone 2		2	UNC1X	USLXX	53.37										
	4-Wire DS1 Digital Loop in Combination - Zone 3		3	UNC1X	USLXX	71.33										
	DS1 COCI in combination per month			UNC1X	UC1D1	8.45										
	2 WIRE VOICE GRADE INTEROFFICE TRANSPORT FOR USE IN A COMBINATION															
	Interoffice Transport - 2-wire VG - Dedicated- Per Mile Per Month			UNCVX	1L5XX	0.01										
	Interoffice Transport - 2-wire VG - Dedicated - Facility Termination per month			UNCVX	U1TV2	14.80										
	4 WIRE VOICE GRADE INTEROFFICE TRANSPORT FOR USE IN A COMBINATION															
	Interoffice Transport - 4-wire VG - Dedicated - Per Mile Per Month			UNCVX	1L5XX	0.01										
	Interoffice Transport - 4-wire VG - Dedicated - Facility Termination per month			UNCVX	U1TV4	12.40										
	DS1 INTEROFFICE TRANSPORT FOR COMBINATION															
	Interoffice Transport - Dedicated - DS1 combination - Per Mile per month			UNC1X	1L5XX	0.13										
	Interoffice Transport - Dedicated - DS1 combination - Facility Termination per month			UNC1X	U1TF1	39.32										
	1/0 Channelization System in combination Per Month			UNC1X	MQ1	80.21										
	DS3 INTEROFFICE TRANSPORT FOR USE IN A COMBINATION															
	Interoffice Transport - Dedicated - DS3 combination - Per Mile Per Month			UNC3X	1L5XX	2.91										

CATEGORY	RATE ELEMENTS	Interim	Zone	BCS	USOC	RATES ($)					Svc Order Submitted Elec per LSR	Svc Order Submitted Manually per LSR	Incremental Charge - Manual Svc Order vs. Electronic-1st	Incremental Charge - Manual Svc Order vs. Electronic-Add'l	Incremental Charge - Manual Svc Order vs. Electronic-Disc 1st	Incremental Charge - Manual Svc Order vs. Electronic-Disc Add'l
						Rec	Nonrecurring		Nonrecurring Disconnect		OSS Rates ($)					
							First	Add'l	First	Add'l	SOMEC	SOMAN	SOMAN	SOMAN	SOMAN	SOMAN
	Interoffice Transport - Dedicated - DS3 - Facility Termination per month			UNC3X	U1TF3	393.32										
	STS-1 INTEROFFICE TRANSPORT FOR USE IN COMBINATION															
	Interoffice Transport - Dedicated - STS-1 combination - Per Mile Per Month			UNCSX	1L5XX	2.91										
	Interoffice Transport - Dedicated - STS-1 combination - Facility Termination per month			UNCSX	U1TFS	412.47										
	4-WIRE 56 KBPS DIGITAL LOOP WITH 56 KBPS INTEROFFICE TRANSPORT															
	4-wire 56 kbps Local Loop in combination - Zone 1		1	UNCDX	UDL56	25.14										
	4-wire 56 kbps Local Loop in combination - Zone 2		2	UNCDX	UDL56	32.61										
	4-wire 56 kbps Local Loop in combination - Zone 3		3	UNCDX	UDL56	43.95										
	Interoffice Transport - Dedicated - 4-wire 56 kbps combination - Per Mile per month			UNCDX	1L5XX	0.01										
	Interoffice Transport - Dedicated - 4-wire 56 kbps combination - Facility Termination per month			UNCDX	U1TD5	9.00										
	4-WIRE 64 KBPS DIGITAL EXTENDED LOOP WITH 64 KBPS INTEROFFICE TRANSPORT															
	4-wire 64 kbps Lcoal Loop in Combination - Zone 1		1	UNCDX	UDL64	25.14										
	4-wire 64 kbps Lcoal Loop in Combination - Zone 2		2	UNCDX	UDL64	32.61										
	4-wire 64 kbps Lcoal Loop in Combination - Zone 3		3	UNCDX	UDL64	43.95										
	Interoffice Transport - Dedicated - 4-wire 64 kbps combination - Per Mile per month			UNCDX	1L5XX	0.01										
	Interoffice Transport - Dedicated - 4-wire 64 kbps combination - Facility Termination per month			UNCDX	U1TD6	9.00										
	4-WIRE 56 KBPS DIGITAL EXTENDED LOOP WITH DS0 INTEROFFICE TRANSPORT															
	4-wire 56 kbps Local Loop in combination - Zone 1		1	UNCDX	UDL56	25.14										
	4-wire 56 kbps Local Loop in combination - Zone 2		2	UNCDX	UDL56	32.61										
	4-wire 56 kbps Local Loop in combination - Zone 3		3	UNCDX	UDL56	43.95										
	4-wiree 56 kbps Interoffice Transport - Dedicated - Per Mile per month			UNCDX	1L5XX	0.01										
	4-wire 56 kbps Interoffice Transport - Dedicated - Facility Termination per month			UNCDX	U1TD5	9.00										
	4-WIRE 64 KBPS DIGITAL EXTENDED LOOP WITH DS0 INTEROFFICE TRANSPORT															
	4-wire 64 kbps Local Loop in combination - Zone 1		1	UNCDX	UDL64	25.14										
	4-wire 64 kbps Local Loop in combination - Zone 2		2	UNCDX	UDL64	32.61										
	4-wire 64 kbps Local Loop in combination - Zone 3		3	UNCDX	UDL64	43.95										
	I4-wire 65 kbps Interoffice Transport - Dedicated - Per Mile per month			UNCDX	1L5XX	0.01										
	4-wire 64 kbps Interoffice Transport - Dedicated - Facility Termination per month			UNCDX	U1TD6	9.00										
	DS1 DIGITAL LOOP AND DS1 INTERFOFFICE TRANSPORT															
	4-Wire DS1 Digital Loop in Combination - Zone 1		1	UNC1X	USLXX	47.17										
	4-Wire DS1 Digital Loop in Combination - Zone 2		2	UNC1X	USLXX	53.37										
	4-Wire DS1 Digital Loop in Combination - Zone 3		3	UNC1X	USLXX	71.33										
	Interoffice Transport - Dedicated - DS1 combination - Per Mile per month			UNC1X	1L5XX	0.13										
	Interoffice Transport - Dedicated - DS1 combination - Facility Termination per month			UNC1X	U1TF1	39.32										
	DS3 DIGITAL LOOP WITH DEDICATED DS3 INTEROFFICE TRANSPORT															
	DS3 Local Loop in combination - per mile per month			UNC3X	1L5ND	14.51										
	DS3 Local Loop in combination - Facility Termination per month			UNC3X	UE3PX	335.10										
	Interoffice Transport - Dedicated - DS3 - Per Mile per month			UNC3X	1L5XX	2.91										
	Interoffice Transport - Dedicated - DS3 combination - Facility Termination per month			UNC3X	U1TF3	393.32										
	STS-1 DIGITAL LOOP WITH DEDICATED STS-1 INTEROFFICE TRANSPORT															
	STS-1 Local Lolp in combination - per mile per month			UNCSX	1L5ND	14.51										
	STS-1 Local Loop in combination - Facility Termination per month			UNCSX	UDLS1	403.92										

UNBUNDLED NETWORK ELEMENTS - Georgia														Attachment: 2 Exh. B			
CATEGORY		RATE ELEMENTS	Interim	Zone	BCS	USOC	RATES ($)					Svc Order Submitted Elec per LSR	Svc Order Submitted Manually per LSR	Incremental Charge - Manual Svc Order vs. Electronic-1st	Incremental Charge - Manual Svc Order vs. Electronic-Add'l	Incremental Charge - Manual Svc Order vs. Electronic-Disc 1st	Incremental Charge - Manual Svc Order vs. Electronic-Disc Add'l
							Rec	Nonrecurring		Nonrecurring Disconnect		OSS Rates ($)					
								First	Add'l	First	Add'l	SOMEC	SOMAN	SOMAN	SOMAN	SOMAN	SOMAN
		Interoffice Transport - Dedicated - STS-1 combination - per mile per month			UNCSX	1L5XX	2.91										
		Interoffice Transport - Dedicated - STS-1 combination - Facility Termination per month			UNCSX	U1TFS	412.47										
ADDITIONAL NETWORK ELEMENTS																	
	When used as a part of a currently combined facility, the non-recurrng charges do not apply, but a Switch As Is charge does apply.																
	When used as ordinarily combined network elements in All States, the non-recurring charges apply and the Switch As Is Charge does not.																
	Nonrecurring Currently Combined Network Elements "Switch As Is" Charge (One applies to each combination)																
	Optional Features & Functions:																
		Clear Channel Capability Extended Frame Option - per DS1	I		U1TD1, ULDD1,UNC1X	CCOEF		0.00	0.00	0.00	0.00						
		Clear Channel Capability Super FrameOption - per DS1	I		U1TD1, ULDD1,UNC1X	CCOSF		0.00	0.00	0.00	0.00						
		Clear Channel Capability (SF/ESF) Option - Subsequent Activity - per DS1	I		ULDD1, U1TD1, UNC1X, USL	NRCCC		184.62	23.78	2.03	0.79						
		C-bit Parity Option - Subsequent Activity - per DS3	i		U1TD3, ULDD3, UE3, UNC3X	NRCC3		218.74	7.66	0.7591	0.00						
	MULTIPLEXERS																
		DS1 to DS0 Channel System per month			UNC1X	MQ1	80.21										
		OCU-DP COCI (data) - DS1 to DS0 Channel System - per month (2.4-64kbs) used for a Local Loop			UDL	1D1DD	1.15										
		OCU-DP COCI (data) - DS1 to DS0 Channel System - per month (2.4-64kbs) used for connection to a channelized DS1 Local Channel in the same SWC as collocation			U1TUD	1D1DD	1.15										
		2-wire ISDN COCI (BRITE) - DS1 to DS0 Channel Systsem - per month for a Local Loop			UDN	UC1CA	1.91										
		2-wire ISDN COCI (BRITE) - DS1 to DS0 Channel Systsem - per month used for connection to a channelized DS1 Local Channel in the same SWC as collocation			U1TUB	UC1CA	1.91										
		Voice Grade COCI - DS1 to DS0 Channel System - per month used for a Local Loop			UEA	1D1VG	0.54										
		Voice Grade COCI - DS1 to DS0 Channel System - per month used for connection to a channelized DS1 Local Channel in the same SWC as collocation			U1TUC	1D1VG	0.54										
		DS3 to DS1 Channel System per month			UNC3X	MQ3	140.18										
		STS-1 to DS1 Channel System per month			UNCSX	MQ3	140.18										
		DS1 COCI used with Loop per month			USL	UC1D1	8.45										
		DS1 COCI (used for connection to a channelized DS1 Local Channel in the same SWC as collocation) per month			U1TUA	UC1D1	8.45										
		DS1 COCI used with Interoffice Channel per month			U1TD1	UC1D1	8.45										
		DS3 Interface Unit (DS1 COCI) used with Local Channel per month			ULDD1	UC1D1	8.45										

UNBUNDLED NETWORK ELEMENTS - Kentucky														Attachment: 2 Exh. B			
CATEGORY	RATE ELEMENTS	Interim	Zone	BCS	USOC	RATES ($)					Svc Order Submitted Elec per LSR	Svc Order Submitted Manually per LSR	Incremental Charge - Manual Svc Order vs. Electronic-1st	Incremental Charge - Manual Svc Order vs. Electronic-Add'l	Incremental Charge - Manual Svc Order vs. Electronic-Disc 1st	Incremental Charge - Manual Svc Order vs. Electronic-Disc Add'l
						Rec	Nonrecurring		Nonrecurring Disconnect		OSS Rates ($)					
							First	Add'l	First	Add'l	SOMEC	SOMAN	SOMAN	SOMAN	SOMAN	SOMAN
UNBUNDLED EXCHANGE ACCESS LOOP																
2-WIRE HIGH BIT RATE DIGITAL SUBSCRIBER LINE (HDSL) COMPATIBLE LOOP																
	2 Wire Unbundled HDSL Loop including manual service inquiry & facility reservation - Zone 1		1	UHL	UHL2X	10.06	151.54	89.29	69.09	11.54						
	2 Wire Unbundled HDSL Loop including manual service inquiry & facility reservation - Zone 2		2	UHL	UHL2X	10.99	151.54	89.29	69.09	11.54						
	2 Wire Unbundled HDSL Loop including manual service inquiry & facility reservation - Zone 3		3	UHL	UHL2X	12.20	151.54	89.29	69.09	11.54						
	2 Wire Unbundled HDSL Loop without manual service inquiry and facility reservation - Zone 1		1	UHL	UHL2W	10.06	130.74	78.56	69.09	11.54						
	2 Wire Unbundled HDSL Loop without manual service inquiry and facility reservation - Zone 2		2	UHL	UHL2W	10.99	130.74	78.56	69.09	11.54						
	2 Wire Unbundled HDSL Loop without manual service inquiry and facility reservation - Zone 3		3	UHL	UHL2W	12.20	130.74	78.56	69.09	11.54						
4-WIRE HIGH BIT RATE DIGITAL SUBSCRIBER LINE (HDSL) COMPATIBLE LOOP																
	4 Wire Unbundled HDSL Loop including manual service inquiry and facility reservation - Zone 1		1	UHL	UHL4X	16.04	185.75	123.50	74.95	14.69						
	4-Wire Unbundled HDSL Loop including manual service inquiry and facility reservation - Zone 2	I	2	UHL	UHL4X	18.03	185.75	123.50	74.95	14.69						
	4-Wire Unbundled HDSL Loop including manual service inquiry and facility reservation - Zone 3		3	UHL	UHL4X	19.53	185.75	123.50	74.95	14.69						
	4-Wire Unbundled HDSL Loop without manual service inquiry and facility reservation - Zone 1		1	UHL	UHL4W	16.04	164.95	114.04	77.32	15.80						
	4-Wire Unbundled HDSL Loop without manual service inquiry and facility reservation - Zone 2		2	UHL	UHL4W	18.03	164.95	114.04	77.32	15.80						
	4-Wire Unbundled HDSL Loop without manual service inquiry and facility reservation - Zone 3		3	UHL	UHL4W	19.53	164.95	114.04	77.32	15.80						
4-WIRE DS1 DIGITAL LOOP																
	4-Wire DS1 Digital Loop - Zone 1		1	USL	USLXX	99.44	306.69	174.44	65.83	14.55						
	4-Wire DS1 Digital Loop - Zone 2		2	USL	USLXX	131.22	306.69	174.44	65.83	14.55						
	4-Wire DS1 Digital Loop - Zone 3		3	USL	USLXX	342.42	306.69	174.44	65.83	14.55						
HIGH CAPACITY UNBUNDLED LOCAL LOOP																
	High Capacity Unbundled Local Loop - DS3 - Per Mile per month			UE3	1L5ND	10.64										
	High Capacity Unbundled Local Loop - DS3 - Facility Termination per month			UE3	UE3PX	354.56										
	High Capacity Unbundled Local Loop - STS-1 - Per Mile per month			UDLSX	1L5ND	10.64										
	High Capacity Unbundled Local Loop - STS-1 - Facility Termination per month			UDLSX	UDLS1	368.59										
UNBUNDLED DEDICATED TRANSPORT																
INTEROFFICE CHANNEL - DEDICATED TRANSPORT																
	Interoffice Channel - Dedicated Channel - DS1 - Per Mile per month			U1TD1	1L5XX	0.26										
	Interoffice Channel - Dedicated Tranport - DS1 - Facility Termination			U1TD1	U1TF1	110.45										
	Interoffice Channel - Dedicated Transport - DS3 - Per Mile per month			U1TD3	1L5XX	5.72										
	Interoffice Channel - Dedicated Transport - DS3 - Facility Termination per month			U1TD3	U1TF3	1351.42										
	Interoffice Channel - Dedicated Transport - STS-1 - Per Mile per month			U1TS1	1L5XX	5.72										
	Interoffice Channel - Dedicated Transport - STS-1 - Facility Termination			U1TS1	U1TFS	1321.94										
	Local Channel - Dedicated - 2-Wire Voice Grade			ULDVX, UNCVX	ULDV2	21.36										
	Local Channel - Dedicated - 2-Wire Voice Grade Rev Bat			ULDVX	ULDR2	21.36										
	Local Channel - Dedicated - 4-Wire Voice Grade			ULDVX, UNCVX	ULDV4	22.84										
	Local Channel - Dedicated - DS1 - Zone 1		1	ULDD1, UNC1X	ULDF1	46.53										

UNBUNDLED NETWORK ELEMENTS - Kentucky														Attachment: 2 Exh. B			
CATEGORY	RATE ELEMENTS	Interim	Zone	BCS	USOC	RATES ($)					Svc Order Submitted Elec per LSR	Svc Order Submitted Manually per LSR	Incremental Charge - Manual Svc Order vs. Electronic-1st	Incremental Charge - Manual Svc Order vs. Electronic-Add'l	Incremental Charge - Manual Svc Order vs. Electronic-Disc 1st	Incremental Charge - Manual Svc Order vs. Electronic-Disc Add'l
						Rec	Nonrecurring		Nonrecurring Disconnect		OSS Rates ($)					
							First	Add'l	First	Add'l	SOMEC	SOMAN	SOMAN	SOMAN	SOMAN	SOMAN
	Local Channel - Dedicated - DS1 - Zone 2		2	ULDD1, UNC1X	ULDF1	49.90										
	Local Channel - Dedicated - DS1 - Zone 3		3	ULDD1, UNC1X	ULDF1	189.18										
	Local Channel - Dedicated - DS3 - Per Mile per month			ULDD3, UNC3X	1L5NC	10.05										
	Local Channel - Dedicated - DS3 - Facility Termination			ULDD3, UNC3X	ULDF3	662.46										
	Local Channel - Dedicated - STS-1- Per Mile per month			ULDS1, UNCSX	1L5NC	10.05										
	Local Channel - Dedicated - STS-1 - Facility Termination			ULDS1, UNCSX	ULDFS	624.73										
ENHANCED EXTENDED LINK (EELs)																
	NOTE: The monthly recurring and non-recurring charges below will apply and the Switch-As-Is Charge will not apply for UNE combinations provisioned as ' Ordinarily Combined' Network Elements.															
	NOTE: The monthly recurring and the Switch-As-Is Charge and not the non-recurring charges below will apply for UNE combinations provisioned as ' Currently Combined' Network Elements.															
	2-WIRE VOICE GRADE LOOP FOR USE IN A COMBINATION															
	2-Wire VG Loop (SL2) in Combination - Zone 1		1	UNCVX	UEAL2	14.57										
	2-Wire VG Loop (SL2) in Combination - Zone 2		2	UNCVX	UEAL2	20.07										
	2-Wire VG Loop (SL2) in Combination - Zone 3		3	UNCVX	UEAL2	38.20										
	Voice Grade COCI - Per Month			UNCVX	1D1VG	0.71										
	4-WIRE VOICE GRADE LOOP FOR USE IN A COMBINATION															
	4-Wire Analog Voice Grade Loop in Combination - Zone 1		1	UNCVX	UEAL4	33.65										
	4-Wire Analog Voice Grade Loop in Combination - Zone 2		2	UNCVX	UEAL4	39.39										
	4-Wire Analog Voice Grade Loop in Combination - Zone 3		3	UNCVX	UEAL4	97.82										
	Voice Grade COCI in combination - per month			UNCVX	1D1VG	0.71										
	4-WIRE 56 KBPS DIGITAL LOOP FOR USE IN A COMBINATION															
	4-Wire 56Kbps Digital Grade Loop in Combination - Zone 1		1	UNCDX	UDL56	31.73										
	4-Wire 56Kbps Digital Grade Loop in Combination - Zone 2		2	UNCDX	UDL56	37.35										
	4-Wire 56Kbps Digital Grade Loop in Combination - Zone 3		3	UNCDX	UDL56	41.83										
	OCU-DP COCI (data) per month (2.4-64kbs)			UNCDX	1D1DD	1.52										
	4-WIRE 64 KBPS DIGITAL LOOP FOR USE IN A COMBINATI\ON															
	4-Wire 64Kbps Digital Grade Loop in Combination - Zone 1		1	UNCDX	UDL64	31.73										
	4-Wire 64Kbps Digital Grade Loop in Combination - Zone 2		2	UNCDX	UDL64	37.35										
	4-Wire 64Kbps Digital Grade Loop in Combination - Zone 3		3	UNCDX	UDL64	41.83										
	OCU-DP COCI (data) - in combination - per month (2.4-64kbs)			UNCDX	1D1DD	1.52										
	2-WIRE ISDN LOOP FOR USE IN COMBINATION															
	2-Wire ISDN Loop in Combination - Zone 1		1	UNCNX	U1L2X	21.21										
	2-Wire ISDN Loop in Combination - Zone 2		2	UNCNX	U1L2X	28.84										
	2-Wire ISDN Loop in Combination - Zone 3		3	UNCNX	U1L2X	49.30										
	2-wire ISDN COCI (BRITE) - in combination - per month			UNCNX	UC1CA	3.27										
	4-WIRE DS1 DIGITAL LOOP FOR USE IN A COMBINATION															
	4-Wire DS1 Digital Loop in Combination - Zone 1		1	UNC1X	USLXX	99.44										
	4-Wire DS1 Digital Loop in Combination - Zone 2		2	UNC1X	USLXX	131.22										
	4-Wire DS1 Digital Loop in Combination - Zone 3		3	UNC1X	USLXX	342.42										
	DS1 COCI in combination per month			UNC1X	UC1D1	13.57										
	2 WIRE VOICE GRADE INTEROFFICE TRANSPORT FOR USE IN A COMBINATION															
	Interoffice Transport - 2-wire VG - Dedicated- Per Mile Per Month			UNCVX	1L5XX	0.01										
	Interoffice Transport - 2-wire VG - Dedicated - Facility Termination per month			UNCVX	U1TV2	27.54										
	4 WIRE VOICE GRADE INTEROFFICE TRANSPORT FOR USE IN A COMBINATION															
	Interoffice Transport - 4-wire VG - Dedicated - Per Mile Per Month			UNCVX	1L5XX	0.01										
	Interoffice Transport - 4-wire VG - Dedicated - Facility Termination per month			UNCVX	U1TV4	27.54										
	DS1 INTEROFFICE TRANSPORT FOR COMBINATION															
	Interoffice Transport - Dedicated - DS1 combination - Per Mile per month			UNC1X	1L5XX	0.22										
	Interoffice Transport - Dedicated - DS1 combination - Facility Termination per month			UNC1X	U1TF1	90.87										
	DS3 INTEROFFICE TRANSPORT FOR USE IN A COMBINATION															
	Interoffice Transport - Dedicated - DS3 combination - Per Mile Per Month			UNC3X	1L5XX	4.70										

CATEGORY	RATE ELEMENTS	Interim	Zone	BCS	USOC	RATES ($)					Svc Order Submitted Elec per LSR	Svc Order Submitted Manually per LSR	Incremental Charge - Manual Svc Order vs. Electronic-1st	Incremental Charge - Manual Svc Order vs. Electronic-Add'l	Incremental Charge - Manual Svc Order vs. Electronic-Disc 1st	Incremental Charge - Manual Svc Order vs. Electronic-Disc Add'l
						Rec	Nonrecurring		Nonrecurring Disconnect		OSS Rates ($)					
							First	Add'l	First	Add'l	SOMEC	SOMAN	SOMAN	SOMAN	SOMAN	SOMAN
	Interoffice Transport - Dedicated - DS3 - Facility Termination per month			UNC3X	U1TF3	1111.92										
	STS-1 INTEROFFICE TRANSPORT FOR USE IN COMBINATION															
	Interoffice Transport - Dedicated - STS-1 combination - Per Mile Per Month			UNCSX	1L5XX	4.70										
	Interoffice Transport - Dedicated - STS-1 combination - Facility Termination per month			UNCSX	U1TFS	1087.66										
	4-WIRE 56 KBPS DIGITAL LOOP WITH 56 KBPS INTEROFFICE TRANSPORT															
	4-wire 56 kbps Local Loop in combination - Zone 1		1	UNCDX	UDL56	31.73										
	4-wire 56 kbps Local Loop in combination - Zone 2		2	UNCDX	UDL56	37.35										
	4-wire 56 kbps Local Loop in combination - Zone 3		3	UNCDX	UDL56	41.83										
	Interoffice Transport - Dedicated - 4-wire 56 kbps combination - Per Mile per month			UNCDX	1L5XX	0.01										
	Interoffice Transport - Dedicated - 4-wire 56 kbps combination - Facility Termination per month			UNCDX	U1TD5	19.84										
	4-WIRE 64 KBPS DIGITAL EXTENDED LOOP WITH 64 KBPS INTEROFFICE TRANSPORT															
	4-wire 64 kbps Lcoal Loop in Combination - Zone 1		1	UNCDX	UDL64	31.73										
	4-wire 64 kbps Lcoal Loop in Combination - Zone 2		2	UNCDX	UDL64	37.35										
	4-wire 64 kbps Lcoal Loop in Combination - Zone 3		3	UNCDX	UDL64	41.83										
	Interoffice Transport - Dedicated - 4-wire 64 kbps combination - Per Mile per month			UNCDX	1L5XX	0.01										
	Interoffice Transport - Dedicated - 4-wire 64 kbps combination - Facility Termination per month			UNCDX	U1TD6	19.84										
	4-WIRE 56 KBPS DIGITAL EXTENDED LOOP WITH DS0 INTEROFFICE TRANSPORT															
	4-wire 56 kbps Local Loop in combination - Zone 1		1	UNCDX	UDL56	31.73										
	4-wire 56 kbps Local Loop in combination - Zone 2		2	UNCDX	UDL56	37.35										
	4-wire 56 kbps Local Loop in combination - Zone 3		3	UNCDX	UDL56	41.83										
	4-wiree 56 kbps Interoffice Transport - Dedicated - Per Mile per month			UNCDX	1L5XX	0.01										
	4-wire 56 kbps Interoffice Transport - Dedicated - Facility Termination per month			UNCDX	U1TD5	19.84										
	4-WIRE 64 KBPS DIGITAL EXTENDED LOOP WITH DS0 INTEROFFICE TRANSPORT															
	4-wire 64 kbps Local Loop in combination - Zone 1		1	UNCDX	UDL64	31.73										
	4-wire 64 kbps Local Loop in combination - Zone 2		2	UNCDX	UDL64	37.35										
	4-wire 64 kbps Local Loop in combination - Zone 3		3	UNCDX	UDL64	41.83										
	I4-wire 65 kbps Interoffice Transport - Dedicated - Per Mile per month			UNCDX	1L5XX	0.01										
	4-wire 64 kbps Interoffice Transport - Dedicated - Facility Termination per month			UNCDX	U1TD6	19.84										
	DS1 DIGITAL LOOP AND DS1 INTERFOFFICE TRANSPORT															
	4-Wire DS1 Digital Loop in Combination - Zone 1		1	UNC1X	USLXX	99.44										
	4-Wire DS1 Digital Loop in Combination - Zone 2		2	UNC1X	USLXX	131.22										
	4-Wire DS1 Digital Loop in Combination - Zone 3		3	UNC1X	USLXX	342.42										
	Interoffice Transport - Dedicated - DS1 combination - Per Mile per month			UNC1X	1L5XX	0.22										
	Interoffice Transport - Dedicated - DS1 combination - Facility Termination per month			UNC1X	U1TF1	90.87										
	DS3 DIGITAL LOOP WITH DEDICATED DS3 INTEROFFICE TRANSPORT															
	DS3 Local Loop in combination - per mile per month			UNC3X	1L5ND	12.23										
	DS3 Local Loop in combination - Facility Termination per month			UNC3X	UE3PX	407.74										
	Interoffice Transport - Dedicated - DS3 - Per Mile per month			UNC3X	1L5XX	4.70										
	Interoffice Transport - Dedicated - DS3 combination - Facility Termination per month			UNC3X	U1TF3	1111.92										
	STS-1 DIGITAL LOOP WITH DEDICATED STS-1 INTEROFFICE TRANSPORT															
	STS-1 Local Lolp in combination - per mile per month			UNCSX	1L5ND	12.23										
	STS-1 Local Loop in combination - Facility Termination per month			UNCSX	UDLS1	423.87										

UNBUNDLED NETWORK ELEMENTS - Kentucky														Attachment: 2 Exh. B			
CATEGORY		RATE ELEMENTS	Interim	Zone	BCS	USOC	RATES ($)					Svc Order Submitted Elec per LSR	Svc Order Submitted Manually per LSR	Incremental Charge - Manual Svc Order vs. Electronic-1st	Incremental Charge - Manual Svc Order vs. Electronic-Add'l	Incremental Charge - Manual Svc Order vs. Electronic-Disc 1st	Incremental Charge - Manual Svc Order vs. Electronic-Disc Add'l
							Rec	Nonrecurring		Nonrecurring Disconnect		OSS Rates ($)					
								First	Add'l	First	Add'l	SOMEC	SOMAN	SOMAN	SOMAN	SOMAN	SOMAN
		Interoffice Transport - Dedicated - STS-1 combination - per mile per month			UNCSX	1L5XX	4.70										
		Interoffice Transport - Dedicated - STS-1 combination - Facility Termination per month			UNCSX	U1TFS	1087.66										
ADDITIONAL NETWORK ELEMENTS																	
	When used as a part of a currently combined facility, the non-recurrng charges do not apply, but a Switch As Is charge does apply.																
	When used as ordinarily combined network elements in All States, the non-recurring charges apply and the Switch As Is Charge does not.																
	Nonrecurring Currently Combined Network Elements "Switch As Is" Charge (One applies to each combination)																
	Optional Features & Functions:																
		Clear Channel Capability Extended Frame Option - per DS1	I		U1TD1, ULDD1,UNC1X	CCOEF		0.00	0.00	0.00	0.00						
		Clear Channel Capability Super FrameOption - per DS1	I		U1TD1, ULDD1,UNC1X	CCOSF		0.00	0.00	0.00	0.00						
		Clear Channel Capability (SF/ESF) Option - Subsequent Activity - per DS1	I		ULDD1, U1TD1, UNC1X, USL	NRCCC		184.91	23.82	1.99	0.78						
		C-bit Parity Option - Subsequent Activity - per DS3	i		U1TD3, ULDD3, UE3, UNC3X	NRCC3		205.70	7.20	0.6924	0.00						
	MULTIPLEXERS																
		DS1 to DS0 Channel System per month			UNC1X	MQ1	130.33										
		OCU-DP COCI (data) - DS1 to DS0 Channel System - per month (2.4-64kbs) used for a Local Loop			UDL	1D1DD	1.52										
		OCU-DP COCI (data) - DS1 to DS0 Channel System - per month (2.4-64kbs) used for connection to a channelized DS1 Local Channel in the same SWC as collocation			U1TUD	1D1DD	1.52										
		2-wire ISDN COCI (BRITE) - DS1 to DS0 Channel Systsem - per month for a Local Loop			UDN	UC1CA	3.27										
		2-wire ISDN COCI (BRITE) - DS1 to DS0 Channel Systsem - per month used for connection to a channelized DS1 Local Channel in the same SWC as collocation			U1TUB	UC1CA	3.27										
		Voice Grade COCI - DS1 to DS0 Channel System - per month used for a Local Loop			UEA	1D1VG	0.72										
		Voice Grade COCI - DS1 to DS0 Channel System - per month used for connection to a channelized DS1 Local Channel in the same SWC as collocation			U1TUC	1D1VG	0.72										
		DS3 to DS1 Channel System per month			UNC3X	MQ3	181.93										
		STS-1 to DS1 Channel System per month			UNCSX	MQ3	181.93										
		DS1 COCI used with Loop per month			USL	UC1D1	13.57										
		DS1 COCI (used for connection to a channelized DS1 Local Channel in the same SWC as collocation) per month			U1TUA	UC1D1	13.57										
		DS1 COCI used with Interoffice Channel per month			U1TD1	UC1D1	13.57										
		DS3 Interface Unit (DS1 COCI) used with Local Channel per month			ULDD1	UC1D1	13.57										

UNBUNDLED NETWORK ELEMENTS - Louisiana														Attachment: 2 Exh. B			
CATEGORY		RATE ELEMENTS	Interim	Zone	BCS	USOC	RATES ($)					Svc Order Submitted Elec per LSR	Svc Order Submitted Manually per LSR	Incremental Charge - Manual Svc Order vs. Electronic-1st	Incremental Charge - Manual Svc Order vs. Electronic-Add'l	Incremental Charge - Manual Svc Order vs. Electronic-Disc 1st	Incremental Charge - Manual Svc Order vs. Electronic-Disc Add'l
							Rec	Nonrecurring		Nonrecurring Disconnect		OSS Rates ($)					
								First	Add'l	First	Add'l	SOMEC	SOMAN	SOMAN	SOMAN	SOMAN	SOMAN
UNBUNDLED EXCHANGE ACCESS LOOP																	
	2-WIRE HIGH BIT RATE DIGITAL SUBSCRIBER LINE (HDSL) COMPATIBLE LOOP																
		2 Wire Unbundled HDSL Loop including manual service inquiry & facility reservation - Zone 1		1	UHL	UHL2X	11.26	125.50	76.77								
		2 Wire Unbundled HDSL Loop including manual service inquiry & facility reservation - Zone 2		2	UHL	UHL2X	13.25	125.50	76.77								
		2 Wire Unbundled HDSL Loop including manual service inquiry & facility reservation - Zone 3		3	UHL	UHL2X	14.65	125.50	76.77								
		2 Wire Unbundled HDSL Loop without manual service inquiry and facility reservation - Zone 1		1	UHL	UHL2W	11.26	101.24	64.43								
		2 Wire Unbundled HDSL Loop without manual service inquiry and facility reservation - Zone 2		2	UHL	UHL2W	13.25	101.24	64.43								
		2 Wire Unbundled HDSL Loop without manual service inquiry and facility reservation - Zone 3		3	UHL	UHL2W	14.65	101.24	64.43								
	4-WIRE HIGH BIT RATE DIGITAL SUBSCRIBER LINE (HDSL) COMPATIBLE LOOP																
		4 Wire Unbundled HDSL Loop including manual service inquiry and facility reservation - Zone 1		1	UHL	UHL4X	18.68	153.26	104.54								
		4-Wire Unbundled HDSL Loop including manual service inquiry and facility reservation - Zone 2		2	UHL	UHL4X	19.15	153.26	104.54								
		4-Wire Unbundled HDSL Loop including manual service inquiry and facility reservation - Zone 3		3	UHL	UHL4X	19.94	153.26	104.54								
		4-Wire Unbundled HDSL Loop without manual service inquiry and facility reservation - Zone 1		1	UHL	UHL4W	18.68	129.00	92.20								
		4-Wire Unbundled HDSL Loop without manual service inquiry and facility reservation - Zone 2		2	UHL	UHL4W	19.15	129.00	92.20								
		4-Wire Unbundled HDSL Loop without manual service inquiry and facility reservation - Zone 3		3	UHL	UHL4W	19.94	129.00	92.20								
	4-WIRE DS1 DIGITAL LOOP																
		4-Wire DS1 Digital Loop - Zone 1		1	USL	USLXX	98.56	245.16	152.98								
		4-Wire DS1 Digital Loop - Zone 2		2	USL	USLXX	224.20	245.16	152.98								
		4-Wire DS1 Digital Loop - Zone 3		3	USL	USLXX	565.73	245.16	152.98								
HIGH CAPACITY UNBUNDLED LOCAL LOOP																	
		High Capacity Unbundled Local Loop - DS3 - Per Mile per month			UE3	1L5ND	11.55										
		High Capacity Unbundled Local Loop - DS3 - Facility Termination per month			UE3	UE3PX	416.69										
		High Capacity Unbundled Local Loop - STS-1 - Per Mile per month			UDLSX	1L5ND	11.55										
		High Capacity Unbundled Local Loop - STS-1 - Facility Termination per month			UDLSX	UDLS1	430.74										
UNBUNDLED DEDICATED TRANSPORT																	
	INTEROFFICE CHANNEL - DEDICATED TRANSPORT																
		Interoffice Channel - Dedicated Channel - DS1 - Per Mile per month			U1TD1	1L5XX	0.30										
		Interoffice Channel - Dedicated Tranport - DS1 - Facility Termination			U1TD1	U1TF1	81.04										
		Interoffice Channel - Dedicated Transport - DS3 - Per Mile per month			U1TD3	1L5XX	6.95										
		Interoffice Channel - Dedicated Transport - DS3 - Facility Termination per month			U1TD3	U1TF3	978.02										
		Interoffice Channel - Dedicated Transport - STS-1 - Per Mile per month			U1TS1	1L5XX	6.95										
		Interoffice Channel - Dedicated Transport - STS-1 - Facility Termination			U1TS1	U1TFS	954.72										
		Local Channel - Dedicated - 2-Wire Voice Grade			ULDVX, UNCVX	ULDV2	21.07										
		Local Channel - Dedicated - 2-Wire Voice Grade Rev Bat			ULDVX	ULDR2	21.07										
		Local Channel - Dedicated - 4-Wire Voice Grade			ULDVX, UNCVX	ULDV4	22.32										
		Local Channel - Dedicated - DS1 - Zone 1		1	ULDD1, UNC1X	ULDF1	45.06										

CATEGORY	RATE ELEMENTS	Interim	Zone	BCS	USOC	RATES ($)					Svc Order Submitted Elec per LSR	Svc Order Submitted Manually per LSR	Incremental Charge - Manual Svc Order vs. Electronic-1st	Incremental Charge - Manual Svc Order vs. Electronic-Add'l	Incremental Charge - Manual Svc Order vs. Electronic-Disc 1st	Incremental Charge - Manual Svc Order vs. Electronic-Disc Add'l
						Rec	Nonrecurring		Nonrecurring Disconnect		OSS Rates ($)					
							First	Add'l	First	Add'l	SOMEC	SOMAN	SOMAN	SOMAN	SOMAN	SOMAN
	Local Channel - Dedicated - DS1 - Zone 2		2	ULDD1, UNC1X	ULDF1	139.82										
	Local Channel - Dedicated - DS1 - Zone 3		3	ULDD1, UNC1X	ULDF1	80.52										
	Local Channel - Dedicated - DS3 - Per Mile per month			ULDD3, UNC3X	1L5NC	8.99										
	Local Channel - Dedicated - DS3 - Facility Termination			ULDD3, UNC3X	ULDF3	539.86										
	Local Channel - Dedicated - STS-1- Per Mile per month			ULDS1, UNCSX	1L5NC	8.99										
	Local Channel - Dedicated - STS-1 - Facility Termination			ULDS1, UNCSX	ULDFS	525.80										
ENHANCED EXTENDED LINK (EELs)																
	NOTE: The monthly recurring and non-recurring charges below will apply and the Switch-As-Is Charge will not apply for UNE combinations provisioned as ' Ordinarily Combined' Network Elements.															
	NOTE: The monthly recurring and the Switch-As-Is Charge and not the non-recurring charges below will apply for UNE combinations provisioned as ' Currently Combined' Network Elements.															
	2-WIRE VOICE GRADE LOOP FOR USE IN A COMBINATION															
	2-Wire VG Loop (SL2) in Combination - Zone 1		1	UNCVX	UEAL2	17.17										
	2-Wire VG Loop (SL2) in Combination - Zone 2		2	UNCVX	UEAL2	29.15										
	2-Wire VG Loop (SL2) in Combination - Zone 3		3	UNCVX	UEAL2	58.03										
	Voice Grade COCI - Per Month			UNCVX	1D1VG	0.75										
	4-WIRE VOICE GRADE LOOP FOR USE IN A COMBINATION															
	4-Wire Analog Voice Grade Loop in Combination - Zone 1		1	UNCVX	UEAL4	35.43										
	4-Wire Analog Voice Grade Loop in Combination - Zone 2		2	UNCVX	UEAL4	44.07										
	4-Wire Analog Voice Grade Loop in Combination - Zone 3		3	UNCVX	UEAL4	69.45										
	Voice Grade COCI in combination - per month			UNCVX	1D1VG	0.75										
	4-WIRE 56 KBPS DIGITAL LOOP FOR USE IN A COMBINATION															
	4-Wire 56Kbps Digital Grade Loop in Combination - Zone 1		1	UNCDX	UDL56	35.64										
	4-Wire 56Kbps Digital Grade Loop in Combination - Zone 2		2	UNCDX	UDL56	42.30										
	4-Wire 56Kbps Digital Grade Loop in Combination - Zone 3		3	UNCDX	UDL56	44.76										
	OCU-DP COCI (data) per month (2.4-64kbs)			UNCDX	1D1DD	1.59										
	4-WIRE 64 KBPS DIGITAL LOOP FOR USE IN A COMBINATI\ON															
	4-Wire 64Kbps Digital Grade Loop in Combination - Zone 1		1	UNCDX	UDL64	35.64										
	4-Wire 64Kbps Digital Grade Loop in Combination - Zone 2		2	UNCDX	UDL64	42.30										
	4-Wire 64Kbps Digital Grade Loop in Combination - Zone 3		3	UNCDX	UDL64	44.76										
	OCU-DP COCI (data) - in combination - per month (2.4-64kbs)			UNCDX	1D1DD	1.59										
	2-WIRE ISDN LOOP FOR USE IN COMBINATION															
	2-Wire ISDN Loop in Combination - Zone 1		1	UNCNX	U1L2X	25.40										
	2-Wire ISDN Loop in Combination - Zone 2		2	UNCNX	U1L2X	40.57										
	2-Wire ISDN Loop in Combination - Zone 3		3	UNCNX	U1L2X	74.96										
	2-wire ISDN COCI (BRITE) - in combination - per month			UNCNX	UC1CA	3.40										
	4-WIRE DS1 DIGITAL LOOP FOR USE IN A COMBINATION															
	4-Wire DS1 Digital Loop in Combination - Zone 1		1	UNC1X	USLXX	98.56										
	4-Wire DS1 Digital Loop in Combination - Zone 2		2	UNC1X	USLXX	224.20										
	4-Wire DS1 Digital Loop in Combination - Zone 3		3	UNC1X	USLXX	565.73										
	DS1 COCI in combination per month			UNC1X	UC1D1	13.55										
	2 WIRE VOICE GRADE INTEROFFICE TRANSPORT FOR USE IN A COMBINATION															
	Interoffice Transport - 2-wire VG - Dedicated- Per Mile Per Month			UNCVX	1L5XX	0.01										
	Interoffice Transport - 2-wire VG - Dedicated - Facility Termination per month			UNCVX	U1TV2	25.99										
	4 WIRE VOICE GRADE INTEROFFICE TRANSPORT FOR USE IN A COMBINATION															
	Interoffice Transport - 4-wire VG - Dedicated - Per Mile Per Month			UNCVX	1L5XX	0.01										
	Interoffice Transport - 4-wire VG - Dedicated - Facility Termination per month			UNCVX	U1TV4	22.78										
	DS1 INTEROFFICE TRANSPORT FOR COMBINATION															
	Interoffice Transport - Dedicated - DS1 combination - Per Mile per month			UNC1X	1L5XX	0.30										
	Interoffice Transport - Dedicated - DS1 combination - Facility Termination per month			UNC1X	U1TF1	81.04										
	DS3 INTEROFFICE TRANSPORT FOR USE IN A COMBINATION															
	Interoffice Transport - Dedicated - DS3 combination - Per Mile Per Month			UNC3X	1L5XX	6.95										
	Interoffice Transport - Dedicated - DS3 - Facility Termination per month			UNC3X	U1TF3	978.02										

CATEGORY	RATE ELEMENTS	Interim	Zone	BCS	USOC	RATES ($)					Svc Order Submitted Elec per LSR	Svc Order Submitted Manually per LSR	Incremental Charge - Manual Svc Order vs. Electronic-1st	Incremental Charge - Manual Svc Order vs. Electronic-Add'l	Incremental Charge - Manual Svc Order vs. Electronic-Disc 1st	Incremental Charge - Manual Svc Order vs. Electronic-Disc Add'l
						Rec	Nonrecurring		Nonrecurring Disconnect		OSS Rates ($)					
							First	Add'l	First	Add'l	SOMEC	SOMAN	SOMAN	SOMAN	SOMAN	SOMAN
STS-1 INTEROFFICE TRANSPORT FOR USE IN COMBINATION																
	Interoffice Transport - Dedicated - STS-1 combination - Per Mile Per Month			UNCSX	1L5XX	6.95										
	Interoffice Transport - Dedicated - STS-1 combination - Facility Termination per month			UNCSX	U1TFS	954.72										
4-WIRE 56 KBPS DIGITAL LOOP WITH 56 KBPS INTEROFFICE TRANSPORT																
	4-wire 56 kbps Local Loop in combination - Zone 1		1	UNCDX	UDL56	35.64										
	4-wire 56 kbps Local Loop in combination - Zone 2		2	UNCDX	UDL56	42.30										
	4-wire 56 kbps Local Loop in combination - Zone 3		3	UNCDX	UDL56	44.76										
	Interoffice Transport - Dedicated - 4-wire 56 kbps combination - Per Mile per month			UNCDX	1L5XX	0.01										
	Interoffice Transport - Dedicated - 4-wire 56 kbps combination - Facility Termination per month			UNCDX	U1TD5	17.95										
4-WIRE 64 KBPS DIGITAL EXTENDED LOOP WITH 64 KBPS INTEROFFICE TRANSPORT																
	4-wire 64 kbps Lcoal Loop in Combination - Zone 1		1	UNCDX	UDL64	35.64										
	4-wire 64 kbps Lcoal Loop in Combination - Zone 2		2	UNCDX	UDL64	42.30										
	4-wire 64 kbps Lcoal Loop in Combination - Zone 3		3	UNCDX	UDL64	44.76										
	Interoffice Transport - Dedicated - 4-wire 64 kbps combination - Per Mile per month			UNCDX	1L5XX	0.01										
	Interoffice Transport - Dedicated - 4-wire 64 kbps combination - Facility Termination per month			UNCDX	U1TD6	17.95										
4-WIRE 56 KBPS DIGITAL EXTENDED LOOP WITH DS0 INTEROFFICE TRANSPORT																
	4-wire 56 kbps Local Loop in combination - Zone 1		1	UNCDX	UDL56	35.64										
	4-wire 56 kbps Local Loop in combination - Zone 2		2	UNCDX	UDL56	42.30										
	4-wire 56 kbps Local Loop in combination - Zone 3		3	UNCDX	UDL56	44.76										
	4-wiree 56 kbps Interoffice Transport - Dedicated - Per Mile per month			UNCDX	1L5XX	0.01										
	4-wire 56 kbps Interoffice Transport - Dedicated - Facility Termination per month			UNCDX	U1TD5	17.95										
4-WIRE 64 KBPS DIGITAL EXTENDED LOOP WITH DS0 INTEROFFICE TRANSPORT																
	4-wire 64 kbps Local Loop in combination - Zone 1		1	UNCDX	UDL64	35.64										
	4-wire 64 kbps Local Loop in combination - Zone 2		2	UNCDX	UDL64	42.30										
	4-wire 64 kbps Local Loop in combination - Zone 3		3	UNCDX	UDL64	44.76										
	I4-wire 65 kbps Interoffice Transport - Dedicated - Per Mile per month			UNCDX	1L5XX	0.01										
	4-wire 64 kbps Interoffice Transport - Dedicated - Facility Termination per month			UNCDX	U1TD6	17.95										
DS1 DIGITAL LOOP AND DS1 INTERFOFFICE TRANSPORT																
	4-Wire DS1 Digital Loop in Combination - Zone 1		1	UNC1X	USLXX	98.56										
	4-Wire DS1 Digital Loop in Combination - Zone 2		2	UNC1X	USLXX	224.20										
	4-Wire DS1 Digital Loop in Combination - Zone 3		3	UNC1X	USLXX	565.73										
	Interoffice Transport - Dedicated - DS1 combination - Per Mile per month			UNC1X	1L5XX	0.30										
	Interoffice Transport - Dedicated - DS1 combination - Facility Termination per month			UNC1X	U1TF1	81.04										
DS3 DIGITAL LOOP WITH DEDICATED DS3 INTEROFFICE TRANSPORT																
	DS3 Local Loop in combination - per mile per month			UNC3X	1L5ND	13.28										
	DS3 Local Loop in combination - Facility Termination per month			UNC3X	UE3PX	479.19										
	Interoffice Transport - Dedicated - DS3 - Per Mile per month			UNC3X	1L5XX	6.95										
	Interoffice Transport - Dedicated - DS3 combination - Facility Termination per month			UNC3X	U1TF3	978.02										
STS-1 DIGITAL LOOP WITH DEDICATED STS-1 INTEROFFICE TRANSPORT																
	STS-1 Local Lolp in combination - per mile per month			UNCSX	1L5ND	13.28										
	STS-1 Local Loop in combination - Facility Termination per month			UNCSX	UDLS1	495.36										
	Interoffice Transport - Dedicated - STS-1 combination - per mile per month			UNCSX	1L5XX	6.95										

UNBUNDLED NETWORK ELEMENTS - Louisiana														Attachment: 2 Exh. B			
CATEGORY		RATE ELEMENTS	Interim	Zone	BCS	USOC	RATES ($)					Svc Order Submitted Elec per LSR	Svc Order Submitted Manually per LSR	Incremental Charge - Manual Svc Order vs. Electronic-1st	Incremental Charge - Manual Svc Order vs. Electronic-Add'l	Incremental Charge - Manual Svc Order vs. Electronic-Disc 1st	Incremental Charge - Manual Svc Order vs. Electronic-Disc Add'l
							Rec	Nonrecurring		Nonrecurring Disconnect		OSS Rates ($)					
								First	Add'l	First	Add'l	SOMEC	SOMAN	SOMAN	SOMAN	SOMAN	SOMAN
		Interoffice Transport - Dedicated - STS-1 combination - Facility Termination per month			UNCSX	U1TFS	954.72										
ADDITIONAL NETWORK ELEMENTS																	
	When used as a part of a currently combined facility, the non-recurrng charges do not apply, but a Switch As Is charge does apply.																
	When used as ordinarily combined network elements in All States, the non-recurring charges apply and the Switch As Is Charge does not.																
	Nonrecurring Currently Combined Network Elements "Switch As Is" Charge (One applies to each combination)																
	Optional Features & Functions:																
		Clear Channel Capability Extended Frame Option - per DS1	I		U1TD1, ULDD1,UNC1X	CCOEF		0.00	0.00	0.00	0.00						
		Clear Channel Capability Super FrameOption - per DS1	I		U1TD1, ULDD1,UNC1X	CCOSF		0.00	0.00	0.00	0.00						
		Clear Channel Capability (SF/ESF) Option - Subsequent Activity - per DS1	I		ULDD1, U1TD1, UNC1X, USL	NRCCC		184.65	23.79	1.97	0.77						
		C-bit Parity Option - Subsequent Activity - per DS3	i		U1TD3, ULDD3, UE3, UNC3X	NRCC3		218.78	7.66	0.7263	0.00						
	MULTIPLEXERS																
		DS1 to DS0 Channel System per month			UNC1X	MQ1	120.85										
		OCU-DP COCI (data) - DS1 to DS0 Channel System - per month (2.4-64kbs) used for a Local Loop			UDL	1D1DD	1.59										
		OCU-DP COCI (data) - DS1 to DS0 Channel System - per month (2.4-64kbs) used for connection to a channelized DS1 Local Channel in the same SWC as collocation			U1TUD	1D1DD	1.59										
		2-wire ISDN COCI (BRITE) - DS1 to DS0 Channel Systsem - per month for a Local Loop			UDN	UC1CA	3.40										
		2-wire ISDN COCI (BRITE) - DS1 to DS0 Channel Systsem - per month used for connection to a channelized DS1 Local Channel in the same SWC as collocation			U1TUB	UC1CA	3.40										
		Voice Grade COCI - DS1 to DS0 Channel System - per month used for a Local Loop			UEA	1D1VG	0.75										
		Voice Grade COCI - DS1 to DS0 Channel System - per month used for connection to a channelized DS1 Local Channel in the same SWC as collocation			U1TUC	1D1VG	0.75										
		DS3 to DS1 Channel System per month			UNC3X	MQ3	231.70										
		STS-1 to DS1 Channel System per month			UNCSX	MQ3	231.70										
		DS1 COCI used with Loop per month			USL	UC1D1	13.55										
		DS1 COCI (used for connection to a channelized DS1 Local Channel in the same SWC as collocation) per month			U1TUA	UC1D1	13.55										
		DS1 COCI used with Interoffice Channel per month			U1TD1	UC1D1	13.55										
		DS3 Interface Unit (DS1 COCI) used with Local Channel per month			ULDD1	UC1D1	13.55										

UNBUNDLED NETWORK ELEMENTS - Mississippi														Attachment: 2 Exh. B			
CATEGORY	RATE ELEMENTS	Interim	Zone	BCS	USOC	RATES ($)					Svc Order Submitted Elec per LSR	Svc Order Submitted Manually per LSR	Incremental Charge - Manual Svc Order vs. Electronic-1st	Incremental Charge - Manual Svc Order vs. Electronic-Add'l	Incremental Charge - Manual Svc Order vs. Electronic-Disc 1st	Incremental Charge - Manual Svc Order vs. Electronic-Disc Add'l
						Rec	Nonrecurring		Nonrecurring Disconnect		OSS Rates ($)					
								Add'l		Add'l	SOMEC	SOMAN	SOMAN	SOMAN	SOMAN	SOMAN
UNBUNDLED EXCHANGE ACCESS LOOP																
2-WIRE HIGH BIT RATE DIGITAL SUBSCRIBER LINE (HDSL) COMPATIBLE LOOP																
	2 Wire Unbundled HDSL Loop including manual service inquiry & facility reservation - Zone 1		1	UHL	UHL2X	10.06	129.98	79.52	50.38	7.93						
	2 Wire Unbundled HDSL Loop including manual service inquiry & facility reservation - Zone 2		2	UHL	UHL2X	10.60	129.98	79.52	50.38	7.93						
	2 Wire Unbundled HDSL Loop including manual service inquiry & facility reservation - Zone 3		3	UHL	UHL2X	11.35	129.98	79.52	50.38	7.93						
	2 Wire Unbundled HDSL Loop including manual service inquiry & facility reservation - Zone 4		4	UHL	UHL2X	12.03	129.98	79.52	50.38	7.93						
	2 Wire Unbundled HDSL Loop without manual service inquiry and facility reservation - Zone 1		1	UHL	UHL2W	10.06	104.86	66.74	50.38	7.93						
	2 Wire Unbundled HDSL Loop without manual service inquiry and facility reservation - Zone 2		2	UHL	UHL2W	10.60	104.86	66.74	50.38	7.93						
	2 Wire Unbundled HDSL Loop without manual service inquiry and facility reservation - Zone 3		3	UHL	UHL2W	11.35	104.86	66.74	50.38	7.93						
	2 Wire Unbundled HDSL Loop without manual service inquiry and facility reservation - Zone 4		4	UHL	UHL2W	12.03	104.86	66.74	50.38	7.93						
4-WIRE HIGH BIT RATE DIGITAL SUBSCRIBER LINE (HDSL) COMPATIBLE LOOP																
	4 Wire Unbundled HDSL Loop including manual service inquiry and facility reservation - Zone 1		1	UHL	UHL4X	15.85	158.74	108.28	56.72	10.68						
	4-Wire Unbundled HDSL Loop including manual service inquiry and facility reservation - Zone 2		2	UHL	UHL4X	15.44	158.74	108.28	56.72	10.68						
	4-Wire Unbundled HDSL Loop including manual service inquiry and facility reservation - Zone 3		3	UHL	UHL4X	17.93	158.74	108.28	56.72	10.68						
	4-Wire Unbundled HDSL Loop including manual service inquiry and facility reservation - Zone 4		4	UHL	UHL4X	16.63	158.74	108.28	56.72	10.68						
	4-Wire Unbundled HDSL Loop without manual service inquiry and facility reservation - Zone 1		1	UHL	UHL4W	15.85	133.62	95.50	56.72	10.68						
	4-Wire Unbundled HDSL Loop without manual service inquiry and facility reservation - Zone 2		2	UHL	UHL4W	15.44	133.62	95.50	56.72	10.68						
	4-Wire Unbundled HDSL Loop without manual service inquiry and facility reservation - Zone 3		3	UHL	UHL4W	17.93	133.62	95.50	56.72	10.68						
	4-Wire Unbundled HDSL Loop without manual service inquiry and facility reservation - Zone 4		4	UHL	UHL4W	16.63	133.62	95.50	56.72	10.68						
4-WIRE DS1 DIGITAL LOOP																
	4-Wire DS1 Digital Loop - Zone 1		1	USL	USLXX	118.62	253.93	158.45	46.10	12.07						
	4-Wire DS1 Digital Loop - Zone 2		2	USL	USLXX	148.79	253.93	158.45	46.10	12.07						
	4-Wire DS1 Digital Loop - Zone 3		3	USL	USLXX	237.75	253.93	158.45	46.10	12.07						
	4-Wire DS1 Digital Loop - Zone 4		4	USL	USLXX	527.23	253.93	158.45	46.10	12.07						
HIGH CAPACITY UNBUNDLED LOCAL LOOP																
	High Capacity Unbundled Local Loop - DS3 - Per Mile per month			UE3	1L5ND	12.88										
	High Capacity Unbundled Local Loop - DS3 - Facility Termination per month			UE3	UE3PX	375.07										
	High Capacity Unbundled Local Loop - STS-1 - Per Mile per month			UDLSX	1L5ND	12.88										
	High Capacity Unbundled Local Loop - STS-1 - Facility Termination per month			UDLSX	UDLS1	389.33										
UNBUNDLED DEDICATED TRANSPORT																
INTEROFFICE CHANNEL - DEDICATED TRANSPORT																
	Interoffice Channel - Dedicated Channel - DS1 - Per Mile per month			U1TD1	1L5XX	0.23										
	Interoffice Channel - Dedicated Tranport - DS1 - Facility Termination			U1TD1	U1TF1	65.93										
	Interoffice Channel - Dedicated Transport - DS3 - Per Mile per month			U1TD3	1L5XX	5.47										

CATEGORY	RATE ELEMENTS	Interim	Zone	BCS	USOC	RATES ($) Rec	Nonrecurring	Nonrecurring Add'l	Nonrecurring Disconnect	Nonrecurring Disconnect Add'l	Svc Order Submitted Elec per LSR	Svc Order Submitted Manually per LSR	Incremental Charge - Manual Svc Order vs. Electronic- 1st	Incremental Charge - Manual Svc Order vs. Electronic- Add'l	Incremental Charge - Manual Svc Order vs. Electronic- Disc 1st	Incremental Charge - Manual Svc Order vs. Electronic- Disc Add'l
							OSS Rates ($)									
											SOMEC	SOMAN	SOMAN	SOMAN	SOMAN	SOMAN
	Interoffice Channel - Dedicated Transport - DS3 - Facility Termination per month			U1TD3	U1TF3	738.18										
	Interoffice Channel - Dedicated Transport - STS-1 - Per Mile per month			U1TS1	1L5XX	5.47										
	Interoffice Channel - Dedicated Transport - STS-1 - Facility Termination			U1TS1	U1TFS	740.84										
	Local Channel - Dedicated - 2-Wire Voice Grade			ULDVX, UNCVX	ULDV2	17.15										
	Local Channel - Dedicated - 2-Wire Voice Grade Rev Bat			ULDVX	ULDR2	17.15										
	Local Channel - Dedicated - 4-Wire Voice Grade			ULDVX, UNCVX	ULDV4	18.39										
	Local Channel - Dedicated - DS1 - Zone 1		1	ULDD1, UNC1X	ULDF1	42.35										
	Local Channel - Dedicated - DS1 - Zone 2		2	ULDD1, UNC1X	ULDF1	41.39										
	Local Channel - Dedicated - DS1 - Zone 3		3	ULDD1, UNC1X	ULDF1	254.87										
	Local Channel - Dedicated - DS1 - Zone 4		4	ULDD1, UNC1X	ULDF1	254.87										
	Local Channel - Dedicated - DS3 - Per Mile per month			ULDD3, UNC3X	1L5NC	11.11										
	Local Channel - Dedicated - DS3 - Facility Termination			ULDD3, UNC3X	ULDF3	475.95										
	Local Channel - Dedicated - STS-1- Per Mile per month			ULDS1, UNCSX	1L5NC	11.11										
	Local Channel - Dedicated - STS-1 - Facility Termination			ULDS1, UNCSX	ULDFS	469.22										
ENHANCED EXTENDED LINK (EELs)																
	NOTE: The monthly recurring and non-recurring charges below will apply and the Switch-As-Is Charge will not apply for UNE combinations provisioned as ' Ordinarily Combined' Network Elements.															
	NOTE: The monthly recurring and the Switch-As-Is Charge and not the non-recurring charges below will apply for UNE combinations provisioned as ' Currently Combined' Network Elements.															
	2-WIRE VOICE GRADE LOOP FOR USE IN A COMBINATION															
	2-Wire VG Loop (SL2) in Combination - Zone 1		1	UNCVX	UEAL2	15.97										
	2-Wire VG Loop (SL2) in Combination - Zone 2		2	UNCVX	UEAL2	21.56										
	2-Wire VG Loop (SL2) in Combination - Zone 3		3	UNCVX	UEAL2	31.68										
	2-Wire VG Loop (SL2) in Combination - Zone 4		4	UNCVX	UEAL2	52.58										
	Voice Grade COCI - Per Month			UNCVX	1D1VG	0.66										
	4-WIRE VOICE GRADE LOOP FOR USE IN A COMBINATION															
	4-Wire Analog Voice Grade Loop in Combination - Zone 1		1	UNCVX	UEAL4	31.59										
	4-Wire Analog Voice Grade Loop in Combination - Zone 2		2	UNCVX	UEAL4	44.00										
	4-Wire Analog Voice Grade Loop in Combination - Zone 3		3	UNCVX	UEAL4	57.53										
	4-Wire Analog Voice Grade Loop in Combination - Zone 4		4	UNCVX	UEAL4	57.53										
	Voice Grade COCI in combination - per month			UNCVX	1D1VG	0.66										
	4-WIRE 56 KBPS DIGITAL LOOP FOR USE IN A COMBINATION															
	4-Wire 56Kbps Digital Grade Loop in Combination - Zone 1		1	UNCDX	UDL56	31.56										
	4-Wire 56Kbps Digital Grade Loop in Combination - Zone 2		2	UNCDX	UDL56	39.73										
	4-Wire 56Kbps Digital Grade Loop in Combination - Zone 3		3	UNCDX	UDL56	46.87										
	4-Wire 56Kbps Digital Grade Loop in Combination - Zone 4		4	UNCDX	UDL56	37.09										
	OCU-DP COCI (data) per month (2.4-64kbs)			UNCDX	1D1DD	1.40										
	4-WIRE 64 KBPS DIGITAL LOOP FOR USE IN A COMBINATI\ON															
	4-Wire 64Kbps Digital Grade Loop in Combination - Zone 1		1	UNCDX	UDL64	31.56										
	4-Wire 64Kbps Digital Grade Loop in Combination - Zone 2		2	UNCDX	UDL64	39.73										
	4-Wire 64Kbps Digital Grade Loop in Combination - Zone 3		3	UNCDX	UDL64	46.87										
	4-Wire 64Kbps Digital Grade Loop in Combination - Zone 4		4	UNCDX	UDL64	37.09										
	OCU-DP COCI (data) - in combination - per month (2.4-64kbs)			UNCDX	1D1DD	1.40										
	2-WIRE ISDN LOOP FOR USE IN COMBINATION															
	2-Wire ISDN Loop in Combination - Zone 1		1	UNCNX	U1L2X	24.16										
	2-Wire ISDN Loop in Combination - Zone 2		2	UNCNX	U1L2X	31.73										
	2-Wire ISDN Loop in Combination - Zone 3		3	UNCNX	U1L2X	42.94										
	2-Wire ISDN Loop in Combination - Zone 4		4	UNCNX	U1L2X	68.06										
	2-wire ISDN COCI (BRITE) - in combination - per month			UNCNX	UC1CA	3.01										
	4-WIRE DS1 DIGITAL LOOP FOR USE IN A COMBINATION															
	4-Wire DS1 Digital Loop in Combination - Zone 1		1	UNC1X	USLXX	90.94										
	4-Wire DS1 Digital Loop in Combination - Zone 2		2	UNC1X	USLXX	148.79										
	4-Wire DS1 Digital Loop in Combination - Zone 3		3	UNC1X	USLXX	237.75										
	4-Wire DS1 Digital Loop in Combination - Zone 4		4	UNC1X	USLXX	527.23										
	DS1 COCI in combination per month			UNC1X	UC1D1	3.01										
	2 WIRE VOICE GRADE INTEROFFICE TRANSPORT FOR USE IN A COMBINATION															
	Interoffice Transport - 2-wire VG - Dedicated- Per Mile Per Month			UNCVX	1L5XX	0.00										

CATEGORY	RATE ELEMENTS	Interim	Zone	BCS	USOC	RATES ($) Rec	Nonrecurring	Nonrecurring Add'l	Nonrecurring Disconnect	Nonrecurring Disconnect Add'l	Svc Order Submitted Elec per LSR	Svc Order Submitted Manually per LSR	Incremental Charge - Manual Svc Order vs. Electronic-1st	Incremental Charge - Manual Svc Order vs. Electronic-Add'l	Incremental Charge - Manual Svc Order vs. Electronic-Disc 1st	Incremental Charge - Manual Svc Order vs. Electronic-Disc Add'l
											OSS Rates ($)					
											SOMEC	SOMAN	SOMAN	SOMAN	SOMAN	SOMAN
	Interoffice Transport - 2-wire VG - Dedicated - Facility Termination per month			UNCVX	U1TV2	23.37										
	4 WIRE VOICE GRADE INTEROFFICE TRANSPORT FOR USE IN A COMBINATION															
	Interoffice Transport - 4-wire VG - Dedicated - Per Mile Per Month			UNCVX	1L5XX	0.00										
	Interoffice Transport - 4-wire VG - Dedicated - Facility Termination per month			UNCVX	U1TV4	20.54										
	DS1 INTEROFFICE TRANSPORT FOR COMBINATION															
	Interoffice Transport - Dedicated - DS1 combination - Per Mile per month			UNC1X	1L5XX	0.21										
	Interoffice Transport - Dedicated - DS1 combination - Facility Termination per month			UNC1X	U1TF1	59.48										
	DS3 INTEROFFICE TRANSPORT FOR USE IN A COMBINATION															
	Interoffice Transport - Dedicated - DS3 combination - Per Mile Per Month			UNC3X	1L5XX	5.47										
	Interoffice Transport - Dedicated - DS3 - Facility Termination per month			UNC3X	U1TF3	738.18										
	STS-1 INTEROFFICE TRANSPORT FOR USE IN COMBINATION															
	Interoffice Transport - Dedicated - STS-1 combination - Per Mile Per Month			UNCSX	1L5XX	5.47										
	3/1 Channel System in combination per month			UNCSX	MQ3	196.22										
	4-WIRE 56 KBPS DIGITAL LOOP WITH 56 KBPS INTEROFFICE TRANSPORT															
	4-wire 56 kbps Local Loop in combination - Zone 1		1	UNCDX	UDL56	31.56										
	4-wire 56 kbps Local Loop in combination - Zone 2		2	UNCDX	UDL56	39.73										
	4-wire 56 kbps Local Loop in combination - Zone 3		3	UNCDX	UDL56	46.87										
	4-wire 56 kbps Local Loop in combination - Zone 4		4	UNCDX	UDL56	37.09										
	Interoffice Transport - Dedicated - 4-wire 56 kbps combination - Per Mile per month			UNCDX	1L5XX	0.01										
	Interoffice Transport - Dedicated - 4-wire 56 kbps combination - Facility Termination per month			UNCDX	U1TD5	25.90										
	4-WIRE 64 KBPS DIGITAL EXTENDED LOOP WITH 64 KBPS INTEROFFICE TRANSPORT															
	4-wire 64 kbps Lcoal Loop in Combination - Zone 1		1	UNCDX	UDL64	31.56										
	4-wire 64 kbps Lcoal Loop in Combination - Zone 2		2	UNCDX	UDL64	39.73										
	4-wire 64 kbps Lcoal Loop in Combination - Zone 3		3	UNCDX	UDL64	46.87										
	4-wire 64 kbps Lcoal Loop in Combination - Zone 4		4	UNCDX	UDL64	37.09										
	Interoffice Transport - Dedicated - 4-wire 64 kbps combination - Per Mile per month			UNCDX	1L5XX	0.01										
	Interoffice Transport - Dedicated - 4-wire 64 kbps combination - Facility Termination per month			UNCDX	U1TD6	25.90										
	4-WIRE 56 KBPS DIGITAL EXTENDED LOOP WITH DS0 INTEROFFICE TRANSPORT															
	4-wire 56 kbps Local Loop in combination - Zone 1		1	UNCDX	UDL56	31.56										
	4-wire 56 kbps Local Loop in combination - Zone 2		2	UNCDX	UDL56	39.73										
	4-wire 56 kbps Local Loop in combination - Zone 3		3	UNCDX	UDL56	46.87										
	4-wire 56 kbps Local Loop in combination - Zone 4		4	UNCDX	UDL56	37.09										
	4-wiree 56 kbps Interoffice Transport - Dedicated - Per Mile per month			UNCDX	1L5XX	0.01										
	4-wire 56 kbps Interoffice Transport - Dedicated - Facility Termination per month			UNCDX	U1TD5	25.90										
	4-WIRE 64 KBPS DIGITAL EXTENDED LOOP WITH DS0 INTEROFFICE TRANSPORT															
	4-wire 64 kbps Local Loop in combination - Zone 1		1	UNCDX	UDL64	31.56										
	4-wire 64 kbps Local Loop in combination - Zone 2		2	UNCDX	UDL64	39.73										
	4-wire 64 kbps Local Loop in combination - Zone 3		3	UNCDX	UDL64	46.87										
	4-wire 64 kbps Local Loop in combination - Zone 4		4	UNCDX	UDL64	37.09										
	l4-wire 65 kbps Interoffice Transport - Dedicated - Per Mile per month			UNCDX	1L5XX	0.01										
	4-wire 64 kbps Interoffice Transport - Dedicated - Facility Termination per month			UNCDX	U1TD6	25.90										
	DS1 DIGITAL LOOP AND DS1 INTERFOFFICE TRANSPORT															
	4-Wire DS1 Digital Loop in Combination - Zone 1		1	UNC1X	USLXX	90.94										

UNBUNDLED NETWORK ELEMENTS - Mississippi

Attachment: 2 Exh. B

CATEGORY	RATE ELEMENTS	Interim	Zone	BCS	USOC	RATES ($) Rec	Nonrecurring	Nonrecurring Add'l	Nonrecurring Disconnect	Nonrecurring Disconnect Add'l	Svc Order Submitted Elec per LSR	Svc Order Submitted Manually per LSR	Incremental Charge - Manual Svc Order vs. Electronic- 1st	Incremental Charge - Manual Svc Order vs. Electronic- Add'l	Incremental Charge - Manual Svc Order vs. Electronic- Disc 1st	Incremental Charge - Manual Svc Order vs. Electronic- Disc Add'l
											OSS Rates ($)					
											SOMEC	SOMAN	SOMAN	SOMAN	SOMAN	SOMAN
	4-Wire DS1 Digital Loop in Combination - Zone 2		2	UNC1X	USLXX	148.79										
	4-Wire DS1 Digital Loop in Combination - Zone 3		3	UNC1X	USLXX	237.75										
	4-wire DS1 Digital Lcoal Loop in Combination - Zone 4		4	UNC1X	USLXX	527.23										
	Interoffice Transport - Dedicated - DS1 combination - Per Mile per month			UNC1X	1L5XX	0.21										
	Interoffice Transport - Dedicated - DS1 combination - Facility Termination per month			UNC1X	U1TF1	59.48										
DS3 DIGITAL LOOP WITH DEDICATED DS3 INTEROFFICE TRANSPORT																
	DS3 Local Loop in combination - per mile per month			UNC3X	1L5ND	14.81										
	DS3 Local Loop in combination - Facility Termination per month			UNC3X	UE3PX	431.33										
	Interoffice Transport - Dedicated - DS3 - Per Mile per month			UNC3X	1L5XX	5.47										
	Interoffice Transport - Dedicated - DS3 combination - Facility Termination per month			UNC3X	U1TF3	738.18										
STS-1 DIGITAL LOOP WITH DEDICATED STS-1 INTEROFFICE TRANSPORT																
	STS-1 Local Lolp in combination - per mile per month			UNCSX	1L5ND	14.81										
	STS-1 Local Loop in combination - Facility Termination per month			UNCSX	UDLS1	447.73										
	Interoffice Transport - Dedicated - STS-1 combination - per mile per month			UNCSX	1L5XX	5.47										
	Interoffice Transport - Dedicated - STS-1 combination - Facility Termination per month			UNCSX	U1TFS	740.84										
ADDITIONAL NETWORK ELEMENTS																
When used as a part of a currently combined facility, the non-recurrng charges do not apply, but a Switch As Is charge does apply.																
When used as ordinarily combined network elements in All States, the non-recurring charges apply and the Switch As Is Charge does not.																
Nonrecurring Currently Combined Network Elements "Switch As Is" Charge (One applies to each combination)																
Optional Features & Functions:																
	Clear Channel Capability Extended Frame Option - per DS1	I		U1TD1, ULDD1,UNC1X	CCOEF		0.00	0.00	0.00	0.00						
	Clear Channel Capability Super FrameOption - per DS1	I		U1TD1, ULDD1,UNC1X	CCOSF		0.00	0.00	0.00	0.00						
	Clear Channel Capability (SF/ESF) Option - Subsequent Activity - per DS1	I		ULDD1, U1TD1, UNC1X, USL	NRCCC		184.60	23.78	1.96	0.76						
	C-bit Parity Option - Subsequent Activity - per DS3	i		U1TD3, ULDD3, UE3, UNC3X	NRCC3		218.72	7.66	0.7201	0.00						
MULTIPLEXERS																
	DS1 to DS0 Channel System per month			UNC1X	MQ1	118.28										
	OCU-DP COCI (data) - DS1 to DS0 Channel System - per month (2.4-64kbs) used for a Local Loop			UDL	1D1DD	1.40										
	OCU-DP COCI (data) - DS1 to DS0 Channel System - per month (2.4-64kbs) used for connection to a channelized DS1 Local Channel in the same SWC as collocation			U1TUD	1D1DD	1.40										
	2-wire ISDN COCI (BRITE) - DS1 to DS0 Channel Systsem - per month for a Local Loop			UDN	UC1CA	3.01										
	2-wire ISDN COCI (BRITE) - DS1 to DS0 Channel Systsem - per month used for connection to a channelized DS1 Local Channel in the same SWC as collocation			U1TUB	UC1CA	3.01										
	Voice Grade COCI - DS1 to DS0 Channel System - per month used for a Local Loop			UEA	1D1VG	0.66										
	Voice Grade COCI - DS1 to DS0 Channel System - per month used for connection to a channelized DS1 Local Channel in the same SWC as collocation			U1TUC	1D1VG	0.66										
	DS3 to DS1 Channel System per month			UNC3X	MQ3	196.22										
	STS-1 to DS1 Channel System per month			UNCSX	MQ3	196.22										
	DS1 COCI used with Loop per month			USL	UC1D1	14.90										
	DS1 COCI (used for connection to a channelized DS1 Local Channel in the same SWC as collocation) per month			U1TUA	UC1D1	14.90										
	DS1 COCI used with Interoffice Channel per month			U1TD1	UC1D1	14.90										

UNBUNDLED NETWORK ELEMENTS - Mississippi														Attachment: 2 Exh. B			
CATEGORY		RATE ELEMENTS	Interim	Zone	BCS	USOC	RATES ($)					Svc Order Submitted Elec per LSR	Svc Order Submitted Manually per LSR	Incremental Charge - Manual Svc Order vs. Electronic-1st	Incremental Charge - Manual Svc Order vs. Electronic-Add'l	Incremental Charge - Manual Svc Order vs. Electronic-Disc 1st	Incremental Charge - Manual Svc Order vs. Electronic-Disc Add'l
							Rec	Nonrecurring		Nonrecurring Disconnect		OSS Rates ($)					
									Add'l		Add'l	SOMEC	SOMAN	SOMAN	SOMAN	SOMAN	SOMAN
		DS3 Interface Unit (DS1 COCI) used with Local Channel per month			ULDD1	UC1D1	14.90										

UNBUNDLED NETWORK ELEMENTS - North Carolina														Attachment: 2 Exh. B			
CATEGORY	RATE ELEMENTS	Interim	Zone	BCS	USOC	RATES ($)					Svc Order Submitted Elec per LSR	Svc Order Submitted Manually per LSR	Incremental Charge - Manual Svc Order vs. Electronic-1st	Incremental Charge - Manual Svc Order vs. Electronic-Add'l	Incremental Charge - Manual Svc Order vs. Electronic-Disc 1st	Incremental Charge - Manual Svc Order vs. Electronic-Disc Add'l
						Rec	Nonrecurring		Nonrecurring Disconnect		OSS Rates ($)					
							First	Add'l	First	Add'l	SOMEC	SOMAN	SOMAN	SOMAN	SOMAN	SOMAN
UNBUNDLED EXCHANGE ACCESS LOOP																
2-WIRE HIGH BIT RATE DIGITAL SUBSCRIBER LINE (HDSL) COMPATIBLE LOOP																
	2 Wire Unbundled HDSL Loop including manual service inquiry & facility reservation - Zone 1		1	UHL	UHL2X	10.36	284.74	163.54					26.94	12.76	0.00	0.00
	2 Wire Unbundled HDSL Loop including manual service inquiry & facility reservation - Zone 2		2	UHL	UHL2X	17.10	284.74	163.54					26.94	12.76	0.00	0.00
	2 Wire Unbundled HDSL Loop including manual service inquiry & facility reservation - Zone 3		3	UHL	UHL2X	26.24	284.74	163.54					26.94	12.76	0.00	0.00
	2 Wire Unbundled HDSL Loop without manual service inquiry and facility reservation - Zone 1		1	UHL	UHL2W	10.36	207.48	132.05					26.94	12.76	0.00	0.00
	2 Wire Unbundled HDSL Loop without manual service inquiry and facility reservation - Zone 2		2	UHL	UHL2W	17.10	207.48	132.05					26.94	12.76	0.00	0.00
	2 Wire Unbundled HDSL Loop without manual service inquiry and facility reservation - Zone 3		3	UHL	UHL2W	26.24	207.48	132.05					26.94	12.76	0.00	0.00
4-WIRE HIGH BIT RATE DIGITAL SUBSCRIBER LINE (HDSL) COMPATIBLE LOOP																
	4 Wire Unbundled HDSL Loop including manual service inquiry and facility reservation - Zone 1		1	UHL	UHL4X	12.21	341.65	220.45					26.94	12.76	0.00	0.00
	4-Wire Unbundled HDSL Loop including manual service inquiry and facility reservation - Zone 2		2	UHL	UHL4X	20.32	341.65	220.45					26.94	12.76	0.00	0.00
	4-Wire Unbundled HDSL Loop including manual service inquiry and facility reservation - Zone 3		3	UHL	UHL4X	31.33	341.65	220.45					26.94	12.76	0.00	0.00
	4-Wire Unbundled HDSL Loop without manual service inquiry and facility reservation - Zone 1		1	UHL	UHL4W	12.21	264.39	188.96					26.94	12.76	0.00	0.00
	4-Wire Unbundled HDSL Loop without manual service inquiry and facility reservation - Zone 2		2	UHL	UHL4W	20.32	264.39	188.96					26.94	12.76	0.00	0.00
	4-Wire Unbundled HDSL Loop without manual service inquiry and facility reservation - Zone 3		3	UHL	UHL4W	31.33	264.39	188.96					26.94	12.76	0.00	0.00
4-WIRE DS1 DIGITAL LOOP																
	4-Wire DS1 Digital Loop - Zone 1		1	USL	USLXX	54.74	714.84	421.47					42.19	12.76	0.00	0.00
	4-Wire DS1 Digital Loop - Zone 2		2	USL	USLXX	97.01	714.84	421.47					42.19	12.76	0.00	0.00
	4-Wire DS1 Digital Loop - Zone 3		3	USL	USLXX	154.43	714.84	421.47					42.19	12.76	0.00	0.00
HIGH CAPACITY UNBUNDLED LOCAL LOOP																
	High Capacity Unbundled Local Loop - DS3 - Per Mile per month			UE3	1L5ND	15.33										
	High Capacity Unbundled Local Loop - DS3 - Facility Termination per month			UE3	UE3PX	518.29										
	High Capacity Unbundled Local Loop - STS-1 - Per Mile per month			UDLSX	1L5ND	15.33										
	High Capacity Unbundled Local Loop - STS-1 - Facility Termination per month			UDLSX	UDLS1	533.90										
UNBUNDLED DEDICATED TRANSPORT																
INTEROFFICE CHANNEL - DEDICATED TRANSPORT																
	Interoffice Channel - Dedicated Channel - DS1 - Per Mile per month			U1TD1	1L5XX	0.66										
	Interoffice Channel - Dedicated Tranport - DS1 - Facility Termination			U1TD1	U1TF1	81.98										
	Interoffice Channel - Dedicated Transport - DS3 - Per Mile per month			U1TD3	1L5XX	14.93										
	Interoffice Channel - Dedicated Transport - DS3 - Facility Termination per month			U1TD3	U1TF3	828.44										
	Interoffice Channel - Dedicated Transport - STS-1 - Per Mile per month			U1TS1	1L5XX	7.06										
	Interoffice Channel - Dedicated Transport - STS-1 - Facility Termination			U1TS1	U1TFS	908.93										
	Local Channel - Dedicated - 2-Wire Voice Grade - Zone 1		1	ULDVX, UNCVX	ULDV2	12.93										
	Local Channel - Dedicated - 2-Wire Voice Grade - Zone 2		2	ULDVX, UNCVX	ULDV2	22.90										
	Local Channel - Dedicated - 2-Wire Voice Grade - Zone 3		3	ULDVX, UNCVX	ULDV2	36.46										
	Local Channel - Dedicated - 4-Wire Voice Grade - Zone 1		1	ULDVX, UNCVX	ULDV4	13.83										

UNBUNDLED NETWORK ELEMENTS - North Carolina

Attachment: 2 Exh. B

CATEGORY	RATE ELEMENTS	Interim	Zone	BCS	USOC	RATES ($) Rec	Nonrecurring First	Nonrecurring Add'l	Nonrecurring Disconnect First	Nonrecurring Disconnect Add'l	Svc Order Submitted Elec per LSR	Svc Order Submitted Manually per LSR	Incremental Charge - Manual Svc Order vs. Electronic-1st	Incremental Charge - Manual Svc Order vs. Electronic-Add'l	Incremental Charge - Manual Svc Order vs. Electronic-Disc 1st	Incremental Charge - Manual Svc Order vs. Electronic-Disc Add'l
							OSS Rates ($)									
											SOMEC	SOMAN	SOMAN	SOMAN	SOMAN	SOMAN
	Local Channel - Dedicated - 4-Wire Voice Grade - Zone 2		2	ULDVX, UNCVX	ULDV4	24.53										
	Local Channel - Dedicated - 4-Wire Voice Grade - Zone 3		3	ULDVX, UNCVX	ULDV4	39.04										
	Local Channel - Dedicated - DS1 - Zone 1		1	ULDD1, UNC1X	ULDF1	31.11										
	Local Channel - Dedicated - DS1 - Zone 2		2	ULDD1, UNC1X	ULDF1	55.13										
	Local Channel - Dedicated - DS1 - Zone 3		3	ULDD1, UNC1X	ULDF1	87.77										
	Local Channel - Dedicated - DS3 - Per Mile per month			ULDD3, UNC3X	1L5NC	1.14										
	Local Channel - Dedicated - DS3 - Facility Termination			ULDD3, UNC3X	ULDF3	343.76										
	Local Channel - Dedicated - STS-1- Per Mile per month			ULDS1, UNCSX	1L5NC	1.14										
	Local Channel - Dedicated - STS-1 - Facility Termination			ULDS1, UNCSX	ULDFS	329.05										
ENHANCED EXTENDED LINK (EELs)																
	NOTE: The monthly recurring and non-recurring charges below will apply and the Switch-As-Is Charge will not apply for UNE combinations provisioned as ' Ordinarily Combined' Network Elements.															
	NOTE: The monthly recurring and the Switch-As-Is Charge and not the non-recurring charges below will apply for UNE combinations provisioned as ' Currently Combined' Network Elements.															
	2-WIRE VOICE GRADE LOOP FOR USE IN A COMBINATION															
	2-Wire VG Loop (SL2) in Combination - Zone 1		1	UNCVX	UEAL2	17.22										
	2-Wire VG Loop (SL2) in Combination - Zone 2		2	UNCVX	UEAL2	29.82										
	2-Wire VG Loop (SL2) in Combination - Zone 3		3	UNCVX	UEAL2	46.93										
	Voice Grade COCI - Per Month			UNCVX	1D1VG	1.46										
	4-WIRE VOICE GRADE LOOP FOR USE IN A COMBINATION															
	4-Wire Analog Voice Grade Loop in Combination - Zone 1		1	UNCVX	UEAL4	24.52										
	4-Wire Analog Voice Grade Loop in Combination - Zone 2		2	UNCVX	UEAL4	41.71										
	4-Wire Analog Voice Grade Loop in Combination - Zone 3		3	UNCVX	UEAL4	65.06										
	Voice Grade COCI in combination - per month			UNCVX	1D1VG	1.46										
	4-WIRE 56 KBPS DIGITAL LOOP FOR USE IN A COMBINATION															
	4-Wire 56Kbps Digital Grade Loop in Combination - Zone 1		1	UNCDX	UDL56	29.12										
	4-Wire 56Kbps Digital Grade Loop in Combination - Zone 2		2	UNCDX	UDL56	49.58										
	4-Wire 56Kbps Digital Grade Loop in Combination - Zone 3		3	UNCDX	UDL56	77.35										
	OCU-DP COCI (data) per month (2.4-64kbs)			UNCDX	1D1DD	2.30										
	4-WIRE 64 KBPS DIGITAL LOOP FOR USE IN A COMBINATI\ON															
	4-Wire 64Kbps Digital Grade Loop in Combination - Zone 1		1	UNCDX	UDL64	29.12										
	4-Wire 64Kbps Digital Grade Loop in Combination - Zone 2		2	UNCDX	UDL64	49.58										
	4-Wire 64Kbps Digital Grade Loop in Combination - Zone 3		3	UNCDX	UDL64	77.35										
	OCU-DP COCI (data) - in combination - per month (2.4-64kbs)			UNCDX	1D1DD	2.30										
	2-WIRE ISDN LOOP FOR USE IN COMBINATION															
	2-Wire ISDN Loop in Combination - Zone 1		1	UNCNX	U1L2X	22.33										
	2-Wire ISDN Loop in Combination - Zone 2		2	UNCNX	U1L2X	37.81										
	2-Wire ISDN Loop in Combination - Zone 3		3	UNCNX	U1L2X	58.81										
	2-wire ISDN COCI (BRITE) - in combination - per month			UNCNX	UC1CA	4.13										
	4-WIRE DS1 DIGITAL LOOP FOR USE IN A COMBINATION															
	4-Wire DS1 Digital Loop in Combination - Zone 1		1	UNC1X	USLXX	54.74										
	4-Wire DS1 Digital Loop in Combination - Zone 2		2	UNC1X	USLXX	97.01										
	4-Wire DS1 Digital Loop in Combination - Zone 3		3	UNC1X	USLXX	154.43										
	DS1 COCI in combination per month			UNC1X	UC1D1	18.48										
	2 WIRE VOICE GRADE INTEROFFICE TRANSPORT FOR USE IN A COMBINATION															
	Interoffice Transport - 2-wire VG - Dedicated- Per Mile Per Month			UNCVX	1L5XX	0.03										
	Interoffice Transport - 2-wire VG - Dedicated - Facility Termination per month			UNCVX	U1TV2	20.70										
	4 WIRE VOICE GRADE INTEROFFICE TRANSPORT FOR USE IN A COMBINATION															
	Interoffice Transport - 4-wire VG - Dedicated - Per Mile Per Month			UNCVX	1L5XX	0.03										
	Interoffice Transport - 4-wire VG - Dedicated - Facility Termination per month			UNCVX	U1TV4	22.16										
	DS1 INTEROFFICE TRANSPORT FOR COMBINATION															
	Interoffice Transport - Dedicated - DS1 combination - Per Mile per month			UNC1X	1L5XX	0.66										
	Interoffice Transport - Dedicated - DS1 combination - Facility Termination per month			UNC1X	U1TF1	81.98										
	DS3 INTEROFFICE TRANSPORT FOR USE IN A COMBINATION															

CATEGORY	RATE ELEMENTS	Interim	Zone	BCS	USOC	RATES ($)					Svc Order Submitted Elec per LSR	Svc Order Submitted Manually per LSR	Incremental Charge - Manual Svc Order vs. Electronic-1st	Incremental Charge - Manual Svc Order vs. Electronic-Add'l	Incremental Charge - Manual Svc Order vs. Electronic-Disc 1st	Incremental Charge - Manual Svc Order vs. Electronic-Disc Add'l
						Rec	Nonrecurring		Nonrecurring Disconnect		OSS Rates ($)					
							First	Add'l	First	Add'l	SOMEC	SOMAN	SOMAN	SOMAN	SOMAN	SOMAN
	Interoffice Transport - Dedicated - DS3 combination - Per Mile Per Month			UNC3X	1L5XX	14.93										
	Interoffice Transport - Dedicated - DS3 - Facility Termination per month			UNC3X	U1TF3	828.44										
	STS-1 INTEROFFICE TRANSPORT FOR USE IN COMBINATION															
	Interoffice Transport - Dedicated - STS-1 combination - Per Mile Per Month			UNCSX	1L5XX	7.06										
	Interoffice Transport - Dedicated - STS-1 combination - Facility Termination per month			UNCSX	U1TFS	908.93										
	4-WIRE 56 KBPS DIGITAL LOOP WITH 56 KBPS INTEROFFICE TRANSPORT															
	4-wire 56 kbps Local Loop in combination - Zone 1		1	UNCDX	UDL56	29.12										
	4-wire 56 kbps Local Loop in combination - Zone 2		2	UNCDX	UDL56	49.58										
	4-wire 56 kbps Local Loop in combination - Zone 3		3	UNCDX	UDL56	77.35										
	Interoffice Transport - Dedicated - 4-wire 56 kbps combination - Per Mile per month			UNCDX	1L5XX	0.03										
	Interoffice Transport - Dedicated - 4-wire 56 kbps combination - Facility Termination per month			UNCDX	U1TD5	20.01										
	4-WIRE 64 KBPS DIGITAL EXTENDED LOOP WITH 64 KBPS INTEROFFICE TRANSPORT															
	4-wire 64 kbps Lcoal Loop in Combination - Zone 1		1	UNCDX	UDL64	29.12										
	4-wire 64 kbps Lcoal Loop in Combination - Zone 2		2	UNCDX	UDL64	49.58										
	4-wire 64 kbps Lcoal Loop in Combination - Zone 3		3	UNCDX	UDL64	77.35										
	Interoffice Transport - Dedicated - 4-wire 64 kbps combination - Per Mile per month			UNCDX	1L5XX	0.03										
	Interoffice Transport - Dedicated - 4-wire 64 kbps combination - Facility Termination per month			UNCDX	U1TD6	20.01										
	4-WIRE 56 KBPS DIGITAL EXTENDED LOOP WITH DS0 INTEROFFICE TRANSPORT															
	4-wire 56 kbps Local Loop in combination - Zone 1		1	UNCDX	UDL56	29.12										
	4-wire 56 kbps Local Loop in combination - Zone 2		2	UNCDX	UDL56	49.58										
	4-wire 56 kbps Local Loop in combination - Zone 3		3	UNCDX	UDL56	77.35										
	4-wiree 56 kbps Interoffice Transport - Dedicated - Per Mile per month			UNCDX	1L5XX	0.03										
	4-wire 56 kbps Interoffice Transport - Dedicated - Facility Termination per month			UNCDX	U1TD5	20.01										
	4-WIRE 64 KBPS DIGITAL EXTENDED LOOP WITH DS0 INTEROFFICE TRANSPORT															
	4-wire 64 kbps Local Loop in combination - Zone 1		1	UNCDX	UDL64	29.12										
	4-wire 64 kbps Local Loop in combination - Zone 2		2	UNCDX	UDL64	49.58										
	4-wire 64 kbps Local Loop in combination - Zone 3		3	UNCDX	UDL64	77.35										
	I4-wire 65 kbps Interoffice Transport - Dedicated - Per Mile per month			UNCDX	1L5XX	0.03										
	4-wire 64 kbps Interoffice Transport - Dedicated - Facility Termination per month			UNCDX	U1TD6	20.01										
	DS1 DIGITAL LOOP AND DS1 INTERFOFFICE TRANSPORT															
	4-Wire DS1 Digital Loop in Combination - Zone 1		1	UNC1X	USLXX	54.74										
	4-Wire DS1 Digital Loop in Combination - Zone 2		2	UNC1X	USLXX	97.01										
	4-Wire DS1 Digital Loop in Combination - Zone 3		3	UNC1X	USLXX	154.43										
	Interoffice Transport - Dedicated - DS1 combination - Per Mile per month			UNC1X	1L5XX	0.66										
	Interoffice Transport - Dedicated - DS1 combination - Facility Termination per month			UNC1X	U1TF1	81.98										
	DS3 DIGITAL LOOP WITH DEDICATED DS3 INTEROFFICE TRANSPORT															
	DS3 Local Loop in combination - per mile per month			UNC3X	1L5ND	15.33										
	DS3 Local Loop in combination - Facility Termination per month			UNC3X	UE3PX	518.29										
	Interoffice Transport - Dedicated - DS3 - Per Mile per month			UNC3X	1L5XX	14.93										
	Interoffice Transport - Dedicated - DS3 combination - Facility Termination per month			UNC3X	U1TF3	828.44										
	STS-1 DIGITAL LOOP WITH DEDICATED STS-1 INTEROFFICE TRANSPORT															
	STS-1 Local Lolp in combination - per mile per month			UNCSX	1L5ND	15.33										

UNBUNDLED NETWORK ELEMENTS - North Carolina														Attachment: 2 Exh. B			
CATEGORY		RATE ELEMENTS	Interim	Zone	BCS	USOC	RATES ($)					Svc Order Submitted Elec per LSR	Svc Order Submitted Manually per LSR	Incremental Charge - Manual Svc Order vs. Electronic-1st	Incremental Charge - Manual Svc Order vs. Electronic-Add'l	Incremental Charge - Manual Svc Order vs. Electronic-Disc 1st	Incremental Charge - Manual Svc Order vs. Electronic-Disc Add'l
							Rec	Nonrecurring		Nonrecurring Disconnect		OSS Rates ($)					
								First	Add'l	First	Add'l	SOMEC	SOMAN	SOMAN	SOMAN	SOMAN	SOMAN
		STS-1 Local Loop in combination - Facility Termination per month			UNCSX	UDLS1	533.90										
		Interoffice Transport - Dedicated - STS-1 combination - per mile per month			UNCSX	1L5XX	7.06										
		Interoffice Transport - Dedicated - STS-1 combination - Facility Termination per month			UNCSX	U1TFS	908.93										
ADDITIONAL NETWORK ELEMENTS																	
	When used as a part of a currently combined facility, the non-recurrng charges do not apply, but a Switch As Is charge does apply.																
	When used as ordinarily combined network elements in All States, the non-recurring charges apply and the Switch As Is Charge does not.																
	Nonrecurring Currently Combined Network Elements "Switch As Is" Charge (One applies to each combination)																
	Optional Features & Functions:																
		Clear Channel Capability Extended Frame Option - per DS1	I		U1TD1, ULDD1,UNC1X	CCOEF		0.00	0.00	0.00	0.00						
		Clear Channel Capability Super FrameOption - per DS1	I		U1TD1, ULDD1,UNC1X	CCOSF		0.00	0.00	0.00	0.00						
		Clear Channel Capability (SF/ESF) Option - Subsequent Activity - per DS1	I		ULDD1, U1TD1, UNC1X, USL	NRCCC		184.76	23.80	1.99	0.78						
		C-bit Parity Option - Subsequent Activity - per DS3	i		U1TD3, ULDD3, UE3, UNC3X	NRCC3		218.92	7.66	0.7576	0.00						
	MULTIPLEXERS																
		DS1 to DS0 Channel System per month			UNC1X	MQ1	168.69										
		OCU-DP COCI (data) - DS1 to DS0 Channel System - per month (2.4-64kbs) used for a Local Loop			UDL	1D1DD	2.30										
		OCU-DP COCI (data) - DS1 to DS0 Channel System - per month (2.4-64kbs) used for connection to a channelized DS1 Local Channel in the same SWC as collocation			U1TUD	1D1DD	2.30										
		2-wire ISDN COCI (BRITE) - DS1 to DS0 Channel Systsem - per month for a Local Loop			UDN	UC1CA	4.13										
		2-wire ISDN COCI (BRITE) - DS1 to DS0 Channel Systsem - per month used for connection to a channelized DS1 Local Channel in the same SWC as collocation			U1TUB	UC1CA	4.13										
		Voice Grade COCI - DS1 to DS0 Channel System - per month used for a Local Loop			UEA	1D1VG	1.46										
		Voice Grade COCI - DS1 to DS0 Channel System - per month used for connection to a channelized DS1 Local Channel in the same SWC as collocation			U1TUC	1D1VG	1.46										
		DS3 to DS1 Channel System per month			UNC3X	MQ3	268.06										
		STS-1 to DS1 Channel System per month			UNCSX	MQ3	268.06										
		DS1 COCI used with Loop per month			USL	UC1D1	18.48										
		DS1 COCI (used for connection to a channelized DS1 Local Channel in the same SWC as collocation) per month			U1TUA	UC1D1	18.48										
		DS1 COCI used with Interoffice Channel per month			U1TD1	UC1D1	18.48										
		DS3 Interface Unit (DS1 COCI) used with Local Channel per month			ULDD1	UC1D1	18.48										

UNBUNDLED NETWORK ELEMENTS - South Carolina

Attachment: 2 Exh. B

CATEGORY	RATE ELEMENTS	Interim	Zone	BCS	USOC	RATES ($)					Svc Order Submitted Elec per LSR	Svc Order Submitted Manually per LSR	Incremental Charge - Manual Svc Order vs. Electronic-1st	Incremental Charge - Manual Svc Order vs. Electronic-Add'l	Incremental Charge - Manual Svc Order vs. Electronic-Disc 1st	Incremental Charge - Manual Svc Order vs. Electronic-Disc Add'l
						Rec	Nonrecurring		Nonrecurring Disconnect		OSS Rates ($)					
							First	Add'l	First	Add'l	SOMEC	SOMAN	SOMAN	SOMAN	SOMAN	SOMAN
UNBUNDLED EXCHANGE ACCESS LOOP																
2-WIRE HIGH BIT RATE DIGITAL SUBSCRIBER LINE (HDSL) COMPATIBLE LOOP																
	2 Wire Unbundled HDSL Loop including manual service inquiry & facility reservation - Zone 1		1	UHL	UHL2X	11.02	129.52	79.24	50.37	7.93						
	2 Wire Unbundled HDSL Loop including manual service inquiry & facility reservation - Zone 2		2	UHL	UHL2X	12.56	129.52	79.24	50.37	7.93						
	2 Wire Unbundled HDSL Loop including manual service inquiry & facility reservation - Zone 3		3	UHL	UHL2X	13.11	129.52	79.24	50.37	7.93						
	2 Wire Unbundled HDSL Loop without manual service inquiry and facility reservation - Zone 1		1	UHL	UHL2W	11.02	104.49	66.50	50.37	7.93						
	2 Wire Unbundled HDSL Loop without manual service inquiry and facility reservation - Zone 2		2	UHL	UHL2W	12.56	104.49	66.50	50.37	7.93						
	2 Wire Unbundled HDSL Loop without manual service inquiry and facility reservation - Zone 3		3	UHL	UHL2W	13.11	104.49	66.50	50.37	7.93						
4-WIRE HIGH BIT RATE DIGITAL SUBSCRIBER LINE (HDSL) COMPATIBLE LOOP																
	4 Wire Unbundled HDSL Loop including manual service inquiry and facility reservation - Zone 1		1	UHL	UHL4X	18.42	158.18	107.89	55.12	10.38						
	4-Wire Unbundled HDSL Loop including manual service inquiry and facility reservation - Zone 2		2	UHL	UHL4X	16.48	158.18	107.89	55.12	10.38						
	4-Wire Unbundled HDSL Loop including manual service inquiry and facility reservation - Zone 3		3	UHL	UHL4X	19.37	158.18	107.89	55.12	10.38						
	4-Wire Unbundled HDSL Loop without manual service inquiry and facility reservation - Zone 1		1	UHL	UHL4W	18.42	133.14	95.16	55.12	10.38						
	4-Wire Unbundled HDSL Loop without manual service inquiry and facility reservation - Zone 2		2	UHL	UHL4W	16.48	133.14	95.16	55.12	10.38						
	4-Wire Unbundled HDSL Loop without manual service inquiry and facility reservation - Zone 3		3	UHL	UHL4W	19.37	133.14	95.16	55.12	10.38						
4-WIRE DS1 DIGITAL LOOP																
	4-Wire DS1 Digital Loop - Zone 1		1	USL	USLXX	91.44	253.03	157.89	44.80	11.73						
	4-Wire DS1 Digital Loop - Zone 2		2	USL	USLXX	156.40	253.03	157.89	44.80	11.73						
	4-Wire DS1 Digital Loop - Zone 3		3	USL	USLXX	263.52	253.03	157.89	44.80	11.73						
HIGH CAPACITY UNBUNDLED LOCAL LOOP																
	High Capacity Unbundled Local Loop - DS3 - Per Mile per month			UE3	1L5ND	14.10										
	High Capacity Unbundled Local Loop - DS3 - Facility Termination per month			UE3	UE3PX	352.31										
	High Capacity Unbundled Local Loop - STS-1 - Per Mile per month			UDLSX	1L5ND	14.10										
	High Capacity Unbundled Local Loop - STS-1 - Facility Termination per month			UDLSX	UDLS1	360.51										
UNBUNDLED DEDICATED TRANSPORT																
INTEROFFICE CHANNEL - DEDICATED TRANSPORT																
	Interoffice Channel - Dedicated Channel - DS1 - Per Mile per month			U1TD1	1L5XX	0.39										
	Interoffice Channel - Dedicated Tranport - DS1 - Facility Termination			U1TD1	U1TF1	88.71										
	Interoffice Channel - Dedicated Transport - DS3 - Per Mile per month			U1TD3	1L5XX	9.22										
	Interoffice Channel - Dedicated Transport - DS3 - Facility Termination per month			U1TD3	U1TF3	1012.75										
	Interoffice Channel - Dedicated Transport - STS-1 - Per Mile per month			U1TS1	1L5XX	9.22										
	Interoffice Channel - Dedicated Transport - STS-1 - Facility Termination			U1TS1	U1TFS	1012.63										
	Local Channel - Dedicated - 2-Wire Voice Grade			ULDVX	ULDV2	17.63										
	Local Channel - Dedicated - 2-Wire Voice Grade Rev Bat			ULDVX	ULDR2	17.63										
	Local Channel - Dedicated - 4-Wire Voice Grade			ULDVX, UNCVX	ULDV4	19.02										
	Local Channel - Dedicated - DS1 - Zone 1		1	ULDD1, UNC1X	ULDF1	49.01										

UNBUNDLED NETWORK ELEMENTS - South Carolina														Attachment: 2 Exh. B			
CATEGORY	RATE ELEMENTS	Interim	Zone	BCS	USOC	RATES ($)					Svc Order Submitted Elec per LSR	Svc Order Submitted Manually per LSR	Incremental Charge - Manual Svc Order vs. Electronic-1st	Incremental Charge - Manual Svc Order vs. Electronic-Add'l	Incremental Charge - Manual Svc Order vs. Electronic-Disc 1st	Incremental Charge - Manual Svc Order vs. Electronic-Disc Add'l
						Rec	Nonrecurring		Nonrecurring Disconnect		OSS Rates ($)					
							First	Add'l	First	Add'l	SOMEC	SOMAN	SOMAN	SOMAN	SOMAN	SOMAN
	Local Channel - Dedicated - DS1 - Zone 2		2	ULDD1, UNC1X	ULDF1	80.87										
	Local Channel - Dedicated - DS1 - Zone 3		3	ULDD1, UNC1X	ULDF1	219.28										
	Local Channel - Dedicated - DS3 - Per Mile per month			ULDD3, UNC3X	1L5NC	13.72										
	Local Channel - Dedicated - DS3 - Facility Termination			ULDD3, UNC3X	ULDF3	512.90										
	Local Channel - Dedicated - STS-1- Per Mile per month			ULDS1, UNCSX	1L5NC	13.72										
	Local Channel - Dedicated - STS-1 - Facility Termination			ULDS1, UNCSX	ULDFS	500.37										
ENHANCED EXTENDED LINK (EELs)																
	NOTE: The monthly recurring and non-recurring charges below will apply and the Switch-As-Is Charge will not apply for UNE combinations provisioned as ' Ordinarily Combined' Network Elements.															
	NOTE: The monthly recurring and the Switch-As-Is Charge and not the non-recurring charges below will apply for UNE combinations provisioned as ' Currently Combined' Network Elements.															
	2-WIRE VOICE GRADE LOOP FOR USE IN A COMBINATION															
	2-Wire VG Loop (SL2) in Combination - Zone 1		1	UNCVX	UEAL2	19.18										
	2-Wire VG Loop (SL2) in Combination - Zone 2		2	UNCVX	UEAL2	26.60										
	2-Wire VG Loop (SL2) in Combination - Zone 3		3	UNCVX	UEAL2	32.73										
	Voice Grade COCI - Per Month			UNCVX	1D1VG	0.64										
	4-WIRE VOICE GRADE LOOP FOR USE IN A COMBINATION															
	4-Wire Analog Voice Grade Loop in Combination - Zone 1		1	UNCVX	UEAL4	37.48										
	4-Wire Analog Voice Grade Loop in Combination - Zone 2		2	UNCVX	UEAL4	50.47										
	4-Wire Analog Voice Grade Loop in Combination - Zone 3		3	UNCVX	UEAL4	49.89										
	Voice Grade COCI in combination - per month			UNCVX	1D1VG	0.64										
	4-WIRE 56 KBPS DIGITAL LOOP FOR USE IN A COMBINATION															
	4-Wire 56Kbps Digital Grade Loop in Combination - Zone 1		1	UNCDX	UDL56	34.42										
	4-Wire 56Kbps Digital Grade Loop in Combination - Zone 2		2	UNCDX	UDL56	39.09										
	4-Wire 56Kbps Digital Grade Loop in Combination - Zone 3		3	UNCDX	UDL56	39.95										
	OCU-DP COCI (data) per month (2.4-64kbs)			UNCDX	1D1DD	1.37										
	4-WIRE 64 KBPS DIGITAL LOOP FOR USE IN A COMBINATI\ON															
	4-Wire 64Kbps Digital Grade Loop in Combination - Zone 1		1	UNCDX	UDL64	34.42										
	4-Wire 64Kbps Digital Grade Loop in Combination - Zone 2		2	UNCDX	UDL64	39.09										
	4-Wire 64Kbps Digital Grade Loop in Combination - Zone 3		3	UNCDX	UDL64	39.95										
	OCU-DP COCI (data) - in combination - per month (2.4-64kbs)			UNCDX	1D1DD	1.37										
	2-WIRE ISDN LOOP FOR USE IN COMBINATION															
	2-Wire ISDN Loop in Combination - Zone 1		1	UNCNX	U1L2X	28.99										
	2-Wire ISDN Loop in Combination - Zone 2		2	UNCNX	U1L2X	37.67										
	2-Wire ISDN Loop in Combination - Zone 3		3	UNCNX	U1L2X	43.36										
	2-wire ISDN COCI (BRITE) - in combination - per month			UNCNX	UC1CA	2.94										
	4-WIRE DS1 DIGITAL LOOP FOR USE IN A COMBINATION															
	4-Wire DS1 Digital Loop in Combination - Zone 1		1	UNC1X	USLXX	104.50										
	4-Wire DS1 Digital Loop in Combination - Zone 2		2	UNC1X	USLXX	178.74										
	4-Wire DS1 Digital Loop in Combination - Zone 3		3	UNC1X	USLXX	301.17										
	DS1 COCI in combination per month			UNC1X	UC1D1	9.94										
	2 WIRE VOICE GRADE INTEROFFICE TRANSPORT FOR USE IN A COMBINATION															
	Interoffice Transport - 2-wire VG - Dedicated- Per Mile Per Month			UNCVX	1L5XX	0.02										
	Interoffice Transport - 2-wire VG - Dedicated - Facility Termination per month			UNCVX	U1TV2	22.36										
	4 WIRE VOICE GRADE INTEROFFICE TRANSPORT FOR USE IN A COMBINATION															
	Interoffice Transport - 4-wire VG - Dedicated - Per Mile Per Month			UNCVX	1L5XX	0.02										
	Interoffice Transport - 4-wire VG - Dedicated - Facility Termination per month			UNCVX	U1TV4	19.58										
	DS1 INTEROFFICE TRANSPORT FOR COMBINATION															
	Interoffice Transport - Dedicated - DS1 combination - Per Mile per month			UNC1X	1L5XX	0.31										
	Interoffice Transport - Dedicated - DS1 combination - Facility Termination per month			UNC1X	U1TF1	70.97										
	DS3 INTEROFFICE TRANSPORT FOR USE IN A COMBINATION															
	Interoffice Transport - Dedicated - DS3 combination - Per Mile Per Month			UNC3X	1L5XX	7.38										
	Interoffice Transport - Dedicated - DS3 - Facility Termination per month			UNC3X	U1TF3	810.20										

UNBUNDLED NETWORK ELEMENTS - South Carolina

Attachment: 2 Exh. B

CATEGORY	RATE ELEMENTS	Interim	Zone	BCS	USOC	RATES ($)					Svc Order Submitted Elec per LSR	Svc Order Submitted Manually per LSR	Incremental Charge - Manual Svc Order vs. Electronic-1st	Incremental Charge - Manual Svc Order vs. Electronic-Add'l	Incremental Charge - Manual Svc Order vs. Electronic-Disc 1st	Incremental Charge - Manual Svc Order vs. Electronic-Disc Add'l
						Rec	Nonrecurring		Nonrecurring Disconnect		OSS Rates ($)					
							First	Add'l	First	Add'l	SOMEC	SOMAN	SOMAN	SOMAN	SOMAN	SOMAN
STS-1 INTEROFFICE TRANSPORT FOR USE IN COMBINATION																
	Interoffice Transport - Dedicated - STS-1 combination - Per Mile Per Month			UNCSX	1L5XX	7.38										
	Interoffice Transport - Dedicated - STS-1 combination - Facility Termination per month			UNCSX	U1TFS	810.11										
4-WIRE 56 KBPS DIGITAL LOOP WITH 56 KBPS INTEROFFICE TRANSPORT																
	4-wire 56 kbps Local Loop in combination - Zone 1		1	UNCDX	UDL56	34.42										
	4-wire 56 kbps Local Loop in combination - Zone 2		2	UNCDX	UDL56	39.09										
	4-wire 56 kbps Local Loop in combination - Zone 3		3	UNCDX	UDL56	39.95										
	Interoffice Transport - Dedicated - 4-wire 56 kbps combination - Per Mile per month			UNCDX	1L5XX	0.02										
	Interoffice Transport - Dedicated - 4-wire 56 kbps combination - Facility Termination per month			UNCDX	U1TD5	15.42										
4-WIRE 64 KBPS DIGITAL EXTENDED LOOP WITH 64 KBPS INTEROFFICE TRANSPORT																
	4-wire 64 kbps Lcoal Loop in Combination - Zone 1		1	UNCDX	UDL64	34.42										
	4-wire 64 kbps Lcoal Loop in Combination - Zone 2		2	UNCDX	UDL64	39.09										
	4-wire 64 kbps Lcoal Loop in Combination - Zone 3		3	UNCDX	UDL64	39.95										
	Interoffice Transport - Dedicated - 4-wire 64 kbps combination - Per Mile per month			UNCDX	1L5XX	0.02										
	Interoffice Transport - Dedicated - 4-wire 64 kbps combination - Facility Termination per month			UNCDX	U1TD6	15.42										
4-WIRE 56 KBPS DIGITAL EXTENDED LOOP WITH DS0 INTEROFFICE TRANSPORT																
	4-wire 56 kbps Local Loop in combination - Zone 1		1	UNCDX	UDL56	34.42										
	4-wire 56 kbps Local Loop in combination - Zone 2		2	UNCDX	UDL56	39.09										
	4-wire 56 kbps Local Loop in combination - Zone 3		3	UNCDX	UDL56	39.95										
	4-wiree 56 kbps Interoffice Transport - Dedicated - Per Mile per month			UNCDX	1L5XX	0.02										
	4-wire 56 kbps Interoffice Transport - Dedicated - Facility Termination per month			UNCDX	U1TD5	15.42										
4-WIRE 64 KBPS DIGITAL EXTENDED LOOP WITH DS0 INTEROFFICE TRANSPORT																
	4-wire 64 kbps Local Loop in combination - Zone 1		1	UNCDX	UDL64	34.42										
	4-wire 64 kbps Local Loop in combination - Zone 2		2	UNCDX	UDL64	39.09										
	4-wire 64 kbps Local Loop in combination - Zone 3		3	UNCDX	UDL64	39.95										
	I4-wire 65 kbps Interoffice Transport - Dedicated - Per Mile per month			UNCDX	1L5XX	0.02										
	4-wire 64 kbps Interoffice Transport - Dedicated - Facility Termination per month			UNCDX	U1TD6	15.42										
DS1 DIGITAL LOOP AND DS1 INTERFOFFICE TRANSPORT																
	4-Wire DS1 Digital Loop in Combination - Zone 1		1	UNC1X	USLXX	104.50										
	4-Wire DS1 Digital Loop in Combination - Zone 2		2	UNC1X	USLXX	178.74										
	4-Wire DS1 Digital Loop in Combination - Zone 3		3	UNC1X	USLXX	301.17										
	Interoffice Transport - Dedicated - DS1 combination - Per Mile per month			UNC1X	1L5XX	0.31										
	Interoffice Transport - Dedicated - DS1 combination - Facility Termination per month			UNC1X	U1TF1	70.97										
DS3 DIGITAL LOOP WITH DEDICATED DS3 INTEROFFICE TRANSPORT																
	DS3 Local Loop in combination - per mile per month			UNC3X	1L5ND	14.10										
	DS3 Local Loop in combination - Facility Termination per month			UNC3X	UE3PX	352.31										
	Interoffice Transport - Dedicated - DS3 - Per Mile per month			UNC3X	1L5XX	7.38										
	Interoffice Transport - Dedicated - DS3 combination - Facility Termination per month			UNC3X	U1TF3	810.20										
STS-1 DIGITAL LOOP WITH DEDICATED STS-1 INTEROFFICE TRANSPORT																
	STS-1 Local Lolp in combination - per mile per month			UNCSX	1L5ND	14.10										
	STS-1 Local Loop in combination - Facility Termination per month			UNCSX	UDLS1	360.51										
	Interoffice Transport - Dedicated - STS-1 combination - per mile per month			UNCSX	1L5XX	7.38										

UNBUNDLED NETWORK ELEMENTS - South Carolina														Attachment: 2 Exh. B			
CATEGORY		RATE ELEMENTS	Interim	Zone	BCS	USOC	RATES ($)					Svc Order Submitted Elec per LSR	Svc Order Submitted Manually per LSR	Incremental Charge - Manual Svc Order vs. Electronic-1st	Incremental Charge - Manual Svc Order vs. Electronic-Add'l	Incremental Charge - Manual Svc Order vs. Electronic-Disc 1st	Incremental Charge - Manual Svc Order vs. Electronic-Disc Add'l
							Rec	Nonrecurring		Nonrecurring Disconnect		OSS Rates ($)					
								First	Add'l	First	Add'l	SOMEC	SOMAN	SOMAN	SOMAN	SOMAN	SOMAN
		Interoffice Transport - Dedicated - STS-1 combination - Facility Termination per month			UNCSX	U1TFS	810.11										
ADDITIONAL NETWORK ELEMENTS																	
	When used as a part of a currently combined facility, the non-recurrng charges do not apply, but a Switch As Is charge does apply.																
	When used as ordinarily combined network elements in All States, the non-recurring charges apply and the Switch As Is Charge does not.																
	Nonrecurring Currently Combined Network Elements "Switch As Is" Charge (One applies to each combination)																
	Optional Features & Functions:																
		Clear Channel Capability Extended Frame Option - per DS1	I		U1TD1, ULDD1,UNC1X	CCOEF		0.00	0.00	0.00	0.00						
		Clear Channel Capability Super FrameOption - per DS1	I		U1TD1, ULDD1,UNC1X	CCOSF		0.00	0.00	0.00	0.00						
		Clear Channel Capability (SF/ESF) Option - Subsequent Activity - per DS1	I		ULDD1, U1TD1, UNC1X, USL	NRCCC		185.26	23.86	1.99	0.78						
		C-bit Parity Option - Subsequent Activity - per DS3	i		U1TD3, ULDD3, UE3, UNC3X	NRCC3		219.58	7.69	0.737	0.00						
	MULTIPLEXERS																
		DS1 to DS0 Channel System per month			UNC1X	MQ1	123.71										
		OCU-DP COCI (data) - DS1 to DS0 Channel System - per month (2.4-64kbs) used for a Local Loop			UDL	1D1DD	1.37										
		OCU-DP COCI (data) - DS1 to DS0 Channel System - per month (2.4-64kbs) used for connection to a channelized DS1 Local Channel in the same SWC as collocation			U1TUD	1D1DD	1.37										
		2-wire ISDN COCI (BRITE) - DS1 to DS0 Channel Systsem - per month for a Local Loop			UDN	UC1CA	2.94										
		2-wire ISDN COCI (BRITE) - DS1 to DS0 Channel Systsem - per month used for connection to a channelized DS1 Local Channel in the same SWC as collocation			U1TUB	UC1CA	2.94										
		Voice Grade COCI - DS1 to DS0 Channel System - per month used for a Local Loop			UEA	1D1VG	0.64										
		Voice Grade COCI - DS1 to DS0 Channel System - per month used for connection to a channelized DS1 Local Channel in the same SWC as collocation			U1TUC	1D1VG	0.64										
		DS3 to DS1 Channel System per month			UNC3X	MQ3	165.62										
		STS-1 to DS1 Channel System per month			UNCSX	MQ3	165.62										
		DS1 COCI used with Loop per month			USL	UC1D1	9.94										
		DS1 COCI (used for connection to a channelized DS1 Local Channel in the same SWC as collocation) per month			U1TUA	UC1D1	9.94										
		DS1 COCI used with Interoffice Channel per month			U1TD1	UC1D1	9.94										
		DS3 Interface Unit (DS1 COCI) used with Local Channel per month			ULDD1	UC1D1	9.94										

UNBUNDLED NETWORK ELEMENTS - Tennessee

Attachment: 2 Exh. B

CATEGORY	RATE ELEMENTS	Interim	Zone	BCS	USOC	RATES ($) Rec	Nonrecurring First	Nonrecurring Add'l	Nonrecurring Disconnect First	Nonrecurring Disconnect Add'l	Svc Order Submitted Elec per LSR	Svc Order Submitted Manually per LSR	Incremental Charge - Manual Svc Order vs. Electronic-1st	Incremental Charge - Manual Svc Order vs. Electronic-Add'l	Incremental Charge - Manual Svc Order vs. Electronic-Disc 1st	Incremental Charge - Manual Svc Order vs. Electronic-Disc Add'l
											OSS Rates ($)					
											SOMEC	SOMAN	SOMAN	SOMAN	SOMAN	SOMAN
UNBUNDLED EXCHANGE ACCESS LOOP																
2-WIRE HIGH BIT RATE DIGITAL SUBSCRIBER LINE (HDSL) COMPATIBLE LOOP																
	2 Wire Unbundled HDSL Loop including manual service inquiry & facility reservation - Zone 1		1	UHL	UHL2X	12.45	270.01	234.63	74.54	39.14			20.35	10.54	13.32	13.32
	2 Wire Unbundled HDSL Loop including manual service inquiry & facility reservation - Zone 2		2	UHL	UHL2X	16.27	270.01	234.63	74.54	39.14			20.35	10.54	13.32	13.32
	2 Wire Unbundled HDSL Loop including manual service inquiry & facility reservation - Zone 3		3	UHL	UHL2X	21.28	270.01	234.63	74.54	39.14			20.35	10.54	13.32	13.32
	2 Wire Unbundled HDSL Loop without manual service inquiry and facility reservation - Zone 1	I	1	UHL	UHL2W	12.45	31.99	20.02	10.65	1.41			20.35	10.54	13.32	13.32
	2 Wire Unbundled HDSL Loop without manual service inquiry and facility reservation - Zone 2	I	2	UHL	UHL2W	16.27	31.99	20.02	10.65	1.41			20.35	10.54	13.32	13.32
	2 Wire Unbundled HDSL Loop without manual service inquiry and facility reservation - Zone 3	I	3	UHL	UHL2W	21.28	31.99	20.02	10.65	1.41			20.35	10.54	13.32	13.32
4-WIRE HIGH BIT RATE DIGITAL SUBSCRIBER LINE (HDSL) COMPATIBLE LOOP																
	4 Wire Unbundled HDSL Loop including manual service inquiry and facility reservation - Zone 1		1	UHL	UHL4X	16.02	279.60	244.22	74.54	39.14			20.35	10.54	13.32	13.32
	4-Wire Unbundled HDSL Loop including manual service inquiry and facility reservation - Zone 2		2	UHL	UHL4X	20.93	279.60	244.22	74.54	39.14			20.35	10.54	13.32	13.32
	4-Wire Unbundled HDSL Loop including manual service inquiry and facility reservation - Zone 3		3	UHL	UHL4X	27.37	279.60	244.22	74.54	39.14			20.35	10.54	13.32	13.32
	4-Wire Unbundled HDSL Loop without manual service inquiry and facility reservation - Zone 1	I	1	UHL	UHL4W	16.02	31.99	20.02	10.65	1.41			20.35	10.54	13.32	13.32
	4-Wire Unbundled HDSL Loop without manual service inquiry and facility reservation - Zone 2	I	2	UHL	UHL4W	20.93	31.99	20.02	10.65	1.41			20.35	10.54	13.32	13.32
	4-Wire Unbundled HDSL Loop without manual service inquiry and facility reservation - Zone 3	I	3	UHL	UHL4W	27.37	31.99	20.02	10.65	1.41			20.35	10.54	13.32	13.32
4-WIRE DS1 DIGITAL LOOP																
	4-Wire DS1 Digital Loop - Zone 1		1	USL	USLXX	66.39	313.08	219.72	96.86	40.45			18.98	8.43	11.95	11.95
	4-Wire DS1 Digital Loop - Zone 2		2	USL	USLXX	86.71	313.08	219.72	96.86	40.45			18.98	8.43	11.95	11.95
	4-Wire DS1 Digital Loop - Zone 3		3	USL	USLXX	113.38	313.08	219.72	96.86	40.45			18.98	8.43	11.95	11.95
HIGH CAPACITY UNBUNDLED LOCAL LOOP																
	High Capacity Unbundled Local Loop - DS3 - Per Mile per month			UE3	1L5ND	10.57										
	High Capacity Unbundled Local Loop - DS3 - Facility Termination per month			UE3	UE3PX	430.38										
	High Capacity Unbundled Local Loop - STS-1 - Per Mile per month			UDLSX	1L5ND	10.57										
	High Capacity Unbundled Local Loop - STS-1 - Facility Termination per month			UDLSX	UDLS1	447.75										
UNBUNDLED DEDICATED TRANSPORT																
INTEROFFICE CHANNEL - DEDICATED TRANSPORT																
	Interoffice Channel - Dedicated Channel - DS1 - Per Mile per month			U1TD1	1L5XX	0.41										
	Interoffice Channel - Dedicated Tranport - DS1 - Facility Termination			U1TD1	U1TF1	89.54										
	Interoffice Channel - Dedicated Transport - DS3 - Per Mile per month			U1TD3	1L5XX	2.69										
	Interoffice Channel - Dedicated Transport - DS3 - Facility Termination per month			U1TD3	U1TF3	976.34										
	Interoffice Channel - Dedicated Transport - STS-1 - Per Mile per month			U1TS1	1L5XX	2.69										
	Interoffice Channel - Dedicated Transport - STS-1 - Facility Termination			U1TS1	U1TFS	976.70										
	Local Channel - Dedicated - 2-Wire Voice Grade - Zone 1		1	ULDVX, UNCVX	ULDV2	19.76										
	Local Channel - Dedicated - 2-Wire Voice Grade - Zone 2		2	ULDVX, UNCVX	ULDV2	25.81										
	Local Channel - Dedicated - 2-Wire Voice Grade - Zone 3		3	ULDVX, UNCVX	ULDV2	33.74										

CATEGORY	RATE ELEMENTS	Interim	Zone	BCS	USOC	RATES ($)					Svc Order Submitted Elec per LSR	Svc Order Submitted Manually per LSR	Incremental Charge - Manual Svc Order vs. Electronic- 1st	Incremental Charge - Manual Svc Order vs. Electronic- Add'l	Incremental Charge - Manual Svc Order vs. Electronic- Disc 1st	Incremental Charge - Manual Svc Order vs. Electronic- Disc Add'l
						Rec	Nonrecurring		Nonrecurring Disconnect		OSS Rates ($)					
							First	Add'l	First	Add'l	SOMEC	SOMAN	SOMAN	SOMAN	SOMAN	SOMAN
	Local Channel - Dedicated - 2-Wire Voice Grade Rev. Bat. - Zone 1		1	ULDVX	ULDR2	19.76										
	Local Channel - Dedicated - 2-Wire Voice Grade Rev. Bat. - Zone 2		2	ULDVX	ULDR2	25.81										
	Local Channel - Dedicated - 2-Wire Voice Grade Rev. Bat. - Zone 3		3	ULDVX	ULDR2	33.74										
	Local Channel - Dedicated - 4-Wire Voice Grade - Zone 1		1	ULDVX, UNCVX	ULDV4	20.91										
	Local Channel - Dedicated - 4-Wire Voice Grade - Zone 2		2	ULDVX, UNCVX	ULDV4	27.30										
	Local Channel - Dedicated - 4-Wire Voice Grade - Zone 3		3	ULDVX, UNCVX	ULDV4	35.71										
	Local Channel - Dedicated - DS1 - Zone 1		1	ULDD1, UNC1X	ULDF1	41.68										
	Local Channel - Dedicated - DS1 - Zone 2		2	ULDD1, UNC1X	ULDF1	54.43										
	Local Channel - Dedicated - DS1 - Zone 3		3	ULDD1, UNC1X	ULDF1	71.17										
	Local Channel - Dedicated - DS3 - Per Mile per month			ULDD3, UNC3X	1L5NC	8.22										
	Local Channel - Dedicated - DS3 - Facility Termination			ULDD3, UNC3X	ULDF3	703.00										
	Local Channel - Dedicated - STS-1- Per Mile per month			ULDS1, UNCSX	1L5NC	8.22										
	Local Channel - Dedicated - STS-1 - Facility Termination			ULDS1, UNCSX	ULDFS	689.53										
ENHANCED EXTENDED LINK (EELs) AND THEIR COMPONETS																
	NOTE: The monthly recurring and non-recurring charges below will apply and the Switch-As-Is Charge will not apply for UNE combinations provisioned as ' Ordinarily Combined' Network Elements.															
	NOTE: The monthly recurring and the Switch-As-Is Charge and not the non-recurring charges below will apply for UNE combinations provisioned as ' Currently Combined' Network Elements.															
	2-WIRE VOICE GRADE LOOP FOR USE IN A COMBINATION															
	2-Wire VG Loop (SL2) in Combination - Zone 1		1	UNCVX	UEAL2	19.04										
	2-Wire VG Loop (SL2) in Combination - Zone 2		2	UNCVX	UEAL2	24.87										
	2-Wire VG Loop (SL2) in Combination - Zone 3		3	UNCVX	UEAL2	32.52										
	Voice Grade COCI - Per Month			UNCVX	1D1VG	1.05										
	4-WIRE VOICE GRADE LOOP FOR USE IN A COMBINATION															
	4-Wire Analog Voice Grade Loop in Combination - Zone 1		1	UNCVX	UEAL4	28.40										
	4-Wire Analog Voice Grade Loop in Combination - Zone 2		2	UNCVX	UEAL4	37.10										
	4-Wire Analog Voice Grade Loop in Combination - Zone 3		3	UNCVX	UEAL4	48.51										
	Voice Grade COCI in combination - per month			UNCVX	1D1VG	1.05										
	4-WIRE 56 KBPS DIGITAL LOOP FOR USE IN A COMBINATION															
	4-Wire 56Kbps Digital Grade Loop in Combination - Zone 1		1	UNCDX	UDL56	35.76										
	4-Wire 56Kbps Digital Grade Loop in Combination - Zone 2		2	UNCDX	UDL56	46.70										
	4-Wire 56Kbps Digital Grade Loop in Combination - Zone 3		3	UNCDX	UDL56	61.08										
	OCU-DP COCI (data) per month (2.4-64kbs)			UNCDX	1D1DD	1.05										
	4-WIRE 64 KBPS DIGITAL LOOP FOR USE IN A COMBINATI\ON															
	4-Wire 64Kbps Digital Grade Loop in Combination - Zone 1		1	UNCDX	UDL64	35.76										
	4-Wire 64Kbps Digital Grade Loop in Combination - Zone 2		2	UNCDX	UDL64	46.70										
	4-Wire 64Kbps Digital Grade Loop in Combination - Zone 3		3	UNCDX	UDL64	61.08										
	OCU-DP COCI (data) - in combination - per month (2.4-64kbs)			UNCDX	1D1DD	1.05										
	2-WIRE ISDN LOOP FOR USE IN COMBINATION															
	2-Wire ISDN Loop in Combination - Zone 1		1	UNCNX	U1L2X	25.55										
	2-Wire ISDN Loop in Combination - Zone 2		2	UNCNX	U1L2X	33.37										
	2-Wire ISDN Loop in Combination - Zone 3		3	UNCNX	U1L2X	43.64										
	2-wire ISDN COCI (BRITE) - in combination - per month			UNCNX	UC1CA	3.73										
	4-WIRE DS1 DIGITAL LOOP FOR USE IN A COMBINATION															
	4-Wire DS1 Digital Loop in Combination - Zone 1		1	UNC1X	USLXX	66.39										
	4-Wire DS1 Digital Loop in Combination - Zone 2		2	UNC1X	USLXX	86.71										
	4-Wire DS1 Digital Loop in Combination - Zone 3		3	UNC1X	USLXX	113.38										
	DS1 COCI in combination per month			UNC1X	UC1D1	20.22										
	2 WIRE VOICE GRADE INTEROFFICE TRANSPORT FOR USE IN A COMBINATION															
	Interoffice Transport - 2-wire VG - Dedicated- Per Mile Per Month			UNCVX	1L5XX	0.02										
	Interoffice Transport - 2-wire VG - Dedicated - Facility Termination per month			UNCVX	U1TV2	25.06										
	4 WIRE VOICE GRADE INTEROFFICE TRANSPORT FOR USE IN A COMBINATION															
	Interoffice Transport - 4-wire VG - Dedicated - Per Mile Per Month			UNCVX	1L5XX	0.02										
	Interoffice Transport - 4-wire VG - Dedicated - Facility Termination per month			UNCVX	U1TV4	31.40										

CATEGORY	RATE ELEMENTS	Interim	Zone	BCS	USOC	RATES ($)					Svc Order Submitted Elec per LSR	Svc Order Submitted Manually per LSR	Incremental Charge - Manual Svc Order vs. Electronic-1st	Incremental Charge - Manual Svc Order vs. Electronic-Add'l	Incremental Charge - Manual Svc Order vs. Electronic-Disc 1st	Incremental Charge - Manual Svc Order vs. Electronic-Disc Add'l
						Rec	Nonrecurring		Nonrecurring Disconnect		OSS Rates ($)					
							First	Add'l	First	Add'l	SOMEC	SOMAN	SOMAN	SOMAN	SOMAN	SOMAN
	DS1 INTEROFFICE TRANSPORT FOR COMBINATION															
	Interoffice Transport - Dedicated - DS1 combination - Per Mile per month			UNC1X	1L5XX	0.41										
	Interoffice Transport - Dedicated - DS1 combination - Facility Termination per month			UNC1X	U1TF1	89.54										
	1/0 Channelization System in combination Per Month			UNC1X	MQ1	92.89										
	DS3 INTEROFFICE TRANSPORT FOR USE IN A COMBINATION															
	Interoffice Transport - Dedicated - DS3 combination - Per Mile Per Month			UNC3X	1L5XX	2.69										
	Interoffice Transport - Dedicated - DS3 - Facility Termination per month			UNC3X	U1TF3	983.22										
	STS-1 INTEROFFICE TRANSPORT FOR USE IN COMBINATION															
	Interoffice Transport - Dedicated - STS-1 combination - Per Mile Per Month			UNCSX	1L5XX	2.69										
	3/1 Channel System in combination per month			UNCSX	MQ3	256.43										
	4-WIRE 56 KBPS DIGITAL LOOP WITH 56 KBPS INTEROFFICE TRANSPORT															
	4-wire 56 kbps Local Loop in combination - Zone 1		1	UNCDX	UDL56	35.76										
	4-wire 56 kbps Local Loop in combination - Zone 2		2	UNCDX	UDL56	46.70										
	4-wire 56 kbps Local Loop in combination - Zone 3		3	UNCDX	UDL56	61.08										
	Interoffice Transport - Dedicated - 4-wire 56 kbps combination - Per Mile per month			UNCDX	1L5XX	0.02										
	Interoffice Transport - Dedicated - 4-wire 56 kbps combination - Facility Termination per month			UNCDX	U1TD5	24.37										
	4-WIRE 64 KBPS DIGITAL EXTENDED LOOP WITH 64 KBPS INTEROFFICE TRANSPORT															
	4-wire 64 kbps Lcoal Loop in Combination - Zone 1		1	UNCDX	UDL64	35.76										
	4-wire 64 kbps Lcoal Loop in Combination - Zone 2		2	UNCDX	UDL64	46.70										
	4-wire 64 kbps Lcoal Loop in Combination - Zone 3		3	UNCDX	UDL64	61.08										
	Interoffice Transport - Dedicated - 4-wire 64 kbps combination - Per Mile per month			UNCDX	1L5XX	0.02										
	Interoffice Transport - Dedicated - 4-wire 64 kbps combination - Facility Termination per month			UNCDX	U1TD6	24.37										
	4-WIRE 56 KBPS DIGITAL EXTENDED LOOP WITH DS0 INTEROFFICE TRANSPORT															
	4-wire 56 kbps Local Loop in combination - Zone 1		1	UNCDX	UDL56	35.76										
	4-wire 56 kbps Local Loop in combination - Zone 2		2	UNCDX	UDL56	46.70										
	4-wire 56 kbps Local Loop in combination - Zone 3		3	UNCDX	UDL56	61.08										
	4-wiree 56 kbps Interoffice Transport - Dedicated - Per Mile per month			UNCDX	1L5XX	0.02										
	4-wire 56 kbps Interoffice Transport - Dedicated - Facility Termination per month			UNCDX	U1TD5	24.37										
	4-WIRE 64 KBPS DIGITAL EXTENDED LOOP WITH DS0 INTEROFFICE TRANSPORT															
	4-wire 64 kbps Local Loop in combination - Zone 1		1	UNCDX	UDL64	35.76										
	4-wire 64 kbps Local Loop in combination - Zone 2		2	UNCDX	UDL64	46.70										
	4-wire 64 kbps Local Loop in combination - Zone 3		3	UNCDX	UDL64	61.08										
	I4-wire 65 kbps Interoffice Transport - Dedicated - Per Mile per month			UNCDX	1L5XX	0.02										
	4-wire 64 kbps Interoffice Transport - Dedicated - Facility Termination per month			UNCDX	U1TD6	24.37										
	DS1 DIGITAL LOOP AND DS1 INTERFOFFICE TRANSPORT															
	4-Wire DS1 Digital Loop in Combination - Zone 1		1	UNC1X	USLXX	66.39										
	4-Wire DS1 Digital Loop in Combination - Zone 2		2	UNC1X	USLXX	86.71										
	4-Wire DS1 Digital Loop in Combination - Zone 3		3	UNC1X	USLXX	113.38										
	Interoffice Transport - Dedicated - DS1 combination - Per Mile per month			UNC1X	1L5XX	0.41										
	Interoffice Transport - Dedicated - DS1 combination - Facility Termination per month			UNC1X	U1TF1	89.54										
	DS3 DIGITAL LOOP WITH DEDICATED DS3 INTEROFFICE TRANSPORT															
	DS3 Local Loop in combination - per mile per month			UNC3X	1L5ND	10.57										
	DS3 Local Loop in combination - Facility Termination per month			UNC3X	UE3PX	429.49										

UNBUNDLED NETWORK ELEMENTS - Tennessee														Attachment: 2 Exh. B			
CATEGORY		RATE ELEMENTS	Interim	Zone	BCS	USOC	RATES ($)					Svc Order Submitted Elec per LSR	Svc Order Submitted Manually per LSR	Incremental Charge - Manual Svc Order vs. Electronic-1st	Incremental Charge - Manual Svc Order vs. Electronic-Add'l	Incremental Charge - Manual Svc Order vs. Electronic-Disc 1st	Incremental Charge - Manual Svc Order vs. Electronic-Disc Add'l
							Rec	Nonrecurring		Nonrecurring Disconnect		OSS Rates ($)					
								First	Add'l	First	Add'l	SOMEC	SOMAN	SOMAN	SOMAN	SOMAN	SOMAN
		Interoffice Transport - Dedicated - DS3 - Per Mile per month			UNC3X	1L5XX	2.69										
		Interoffice Transport - Dedicated - DS3 combination - Facility Termination per month			UNC3X	U1TF3	983.22										
	STS-1 DIGITAL LOOP WITH DEDICATED STS-1 INTEROFFICE TRANSPORT																
		STS-1 Local Lolp in combination - per mile per month			UNCSX	1L5ND	10.57										
		STS-1 Local Loop in combination - Facility Termination per month			UNCSX	UDLS1	453.74										
		Interoffice Transport - Dedicated - STS-1 combination - per mile per month			UNCSX	1L5XX	2.69										
		Interoffice Transport - Dedicated - STS-1 combination - Facility Termination per month			UNCSX	U1TFS	976.70										
ADDITIONAL NETWORK ELEMENTS																	
	When used as a part of a currently combined facility, the non-recurrng charges do not apply, but a Switch As Is charge does apply.																
	When used as ordinarily combined network elements in All States, the non-recurring charges apply and the Switch As Is Charge does not.																
	Nonrecurring Currently Combined Network Elements "Switch As Is" Charge (One applies to each combination)																
	Optional Features & Functions:																
		Clear Channel Capability Extended Frame Option - per DS1	I		U1TD1, ULDD1,UNC1X	CCOEF		0.00	0.00	0.00	0.00						
		Clear Channel Capability Super FrameOption - per DS1	i		U1TD1, ULDD1,UNC1X	CCOSF		0.00	0.00	0.00	0.00						
		Clear Channel Capability (SF/ESF) Option - Subsequent Activity - per DS1	I		ULDD1, U1TD1, UNC1X, USL	NRCCC		185.16	23.85	2.03	0.79						
		C-bit Parity Option - Subsequent Activity - per DS3	i		U1TD3, ULDD3, UE3, UNC3X	NRCC3		219.46	7.68	0.7637	0.00						
	MULTIPLEXERS																
		DS1 to DS0 Channel System per month			UNC1X	MQ1	92.89										
		OCU-DP COCI (data) - DS1 to DS0 Channel System - per month (2.4-64kbs) used for a Local Loop			UDL	1D1DD	2.09										
		OCU-DP COCI (data) - DS1 to DS0 Channel System - per month (2.4-64kbs) used for connection to a channelized DS1 Local Channel in the same SWC as collocation			U1TUD	1D1DD	2.09										
		2-wire ISDN COCI (BRITE) - DS1 to DS0 Channel Systsem - per month for a Local Loop			UDN	UC1CA	3.56										
		2-wire ISDN COCI (BRITE) - DS1 to DS0 Channel Systsem - per month used for connection to a channelized DS1 Local Channel in the same SWC as collocation			U1TUB	UC1CA	3.56										
		Voice Grade COCI - DS1 to DS0 Channel System - per month used for a Local Loop			UEA	1D1VG	1.05										
		Voice Grade COCI - DS1 to DS0 Channel System - per month used for connection to a channelized DS1 Local Channel in the same SWC as collocation			U1TUC	1D1VG	1.05										
		DS3 to DS1 Channel System per month			UNC3X	MQ3	256.43										
		STS-1 to DS1 Channel System per month			UNCSX	MQ3	256.43										
		DS1 COCI used with Loop per month			USL	UC1D1	20.22										
		DS1 COCI (used for connection to a channelized DS1 Local Channel in the same SWC as collocation) per month			U1TUA	UC1D1	20.22										
		DS1 COCI used with Interoffice Channel per month			U1TD1	UC1D1	20.22										
		DS3 Interface Unit (DS1 COCI) used with Local Channel per month			ULDD1	UC1D1	20.22										

Attachment 3

Network Interconnection

TABLE OF CONTENTS

1. GENERAL 3

2. DEFINITIONS: (FOR THE PURPOSE OF THIS ATTACHMENT) 3

3. NETWORK INTERCONNECTION 5

4. INTERCONNECTION TRUNK GROUP ARCHITECTURES 9

5. NETWORK DESIGN AND MANAGEMENT FOR INTERCONNECTION 16

6. SIGNALING 17

7. FORECASTING FOR TRUNK PROVISIONING 25

8. TRUNK UTILIZATION 26

9. INTERFERENCE OR IMPAIRMENT 28

10. COMPENSATION FOR CALL TRANSPORTATION AND TERMINATION FOR LOCAL TRAFFIC AND ISP-BOUND TRAFFIC 30

11. FRAME RELAY SERVICE INTERCONNECTION 39

12. BASIC 911 AND E911 INTERCONNECTION 42

Rates	**Exhibit A**
Basic Architecture	**Exhibit B**
One Way Architecture	**Exhibit C**
Two Way Architecture	**Exhibit D**
Supergroup Architecture	**Exhibit E**

NETWORK INTERCONNECTION

1. GENERAL

1.1 The Parties shall provide interconnection with each other's networks for the transmission and routing of telephone exchange service (Local Traffic), ISP-bound Traffic, and exchange access (Switched Access Traffic) on the following terms:

2. DEFINITIONS: (FOR THE PURPOSE OF THIS ATTACHMENT)

For purposes of this attachment only, the following terms shall have the definitions set forth below:

2.1 **Automatic Location Identification (ALI)** is a feature by which the address associated with the calling party's telephone number (ANI) is forwarded to the PSAP for display. Access to the ALI database is described in Attachment 2 to this Agreement.

2.2 **Automatic Number Identification (ANI)** corresponds to the seven-digit telephone number assigned by the serving local exchange carrier.

2.3 **Basic 911 Service (B911)** routes a call to one centralized answering location. The attendant at the answering location obtains the pertinent information that identifies the call and the caller's needs. The attendant then determines the appropriate agency and dials a seven (7)-digit number to transfer the caller to that agency. The calling party's emergency information is verbally relayed to the responding agency and a unit is dispatched to the caller's location.

2.4 **Call Termination** has the meaning set forth for "termination" in 47 C.F.R. § 51.701(d).

2.5 **Call Transport** has the meaning set forth for "transport" in 47 C.F.R. § 51.701(c).

2.6 **Call Transport and Termination** is used collectively to mean the switching and transport functions from the Interconnection Point to the last point of switching.

2.7 **Common (Shared) Transport** is defined as the transport of the originating Party's traffic by the terminating Party over the terminating Party's common (shared) facilities between (1) the terminating Party's tandem switch and end office switch, (2) between the terminating Party's tandem switches, and/or (3) between the terminating Party's host and remote end office switches. All switches referred herein must be entered into the Local Exchange Routing Guide (LERG).

2.8 **Cross Connect** is as defined in Attachment 4 of the Interconnection Agreement. If a Party provisions a cross connect for the purposes of interconnection under this Attachment 3, and such cross connect is not associated with a physical or virtual

collocation arrangement, the provisioning party shall not charge for such cross connect.

2.9 **Dedicated Interoffice Facility** is defined as a switch transport facility between a Party's Serving Wire Center and the first point of switching within the LATA on the other Party's network.

2.10 **End Office Switching** is defined as the function that establishes a communications path between the trunk side and line side of the End Office switch.

2.11 **Enhanced 911 Service** provides features not present in B911 Service, including ANI and ALI display, Selective Routing (SR) and other standard and optional features.

2.12 **Fiber Meet** is an interconnection arrangement whereby the Parties physically interconnect their networks via an optical fiber interface at which one Party's facilities, provisioning, and maintenance responsibility begins and the other Party's responsibility ends.

2.13 **Interconnection Point (IP)** is the physical telecommunications equipment interface that interconnects the networks of BellSouth and KMC III.

2.14 **IntraLATA Toll Traffic** does not exist for purposes of this Agreement, as the Parties have agreed upon a LATA-wide Local Traffic definition.

2.15 **ISP-bound Traffic** is defined as a call to an information service provider/enhanced service provider or Internet Service Provider (ISP) that is dialed by using a local dialing pattern (seven (7) or ten (10) digits).

2.16 **Local Channel** is defined as a switched transport facility between a Party's Point of Presence and its designated Serving Wire center where the POP is not located in the designated Serving Wire Center**.**

2.17 **Local Traffic** is as defined any circuit switched call that is originated by an end user of one Party and terminated to an end user of the other Party within a given LATA on that other Party's network, except for those calls that are originated or terminated through switched access arrangements as established by applicable FCC and Commissions rules and orders.

2.18 **Point of Presence** (POP) is the physical location at which a Party establishes itself for obtaining access to the other Party's network.

2.19 **Public Safety Answering Point (PSAP)** is the answering location for 911 calls.

2.20 **Reciprocal Trunk Group** is defined as a one-way trunk group carrying BellSouth originated traffic to be terminated by KMC III.

2.21 **Serving Wire Center** is defined as the first, or only, wire center (such as a tandem or an end office) owned, or leased by one Party that is designated by that Party to serve the geographic area in which the other Party's POP is located and to which the other Party's facilities are connected (i.e., interconnected or transverses/passes through) for the purposes of interconnection.

2.22 **Selective Routing (SR)** is a standard feature that routes an E911 call from the tandem to the designated PSAP based upon the address of the ANI of the calling party.

2.23 **Tandem Switching** is defined as the function that establishes a communications path between two switching offices through a third switching office through the provision of trunk side to trunk side switching.

2.23.1 Consistent with FCC rules and orders, a KMC III switch shall be considered a tandem switch if it serves a geographic area comparable, but not necessarily identical, to that served by the relevant BellSouth tandem switch. KMC III shall provide to BellSouth supporting data to show such geographic comparability and if the Parties are unable to agree then the issue shall be resolved pursuant to the Dispute Resolution process set forth in the General Terms and Conditions of this Agreement.

2.24 **Transit Traffic** is traffic originating on one Party's network that is switched and/or transported by the other Party and delivered to a third party's network, or traffic originating on a third party's network that is switched and/or transported by one Party and delivered to the other Party's network.

3. NETWORK INTERCONNECTION

3.1 This Attachment pertains only to the provision of network interconnection where KMC III owns, leases from a third party or otherwise provides its own switch(es).

3.2 Network interconnection may be provided by the Parties at any technically feasible point within BellSouth's network in accordance with applicable FCC and Commission Rules and Orders. In accordance with the terms of this Agreement, network interconnection may be provided via a DS0 where technically feasible and supported by applicable industry standards. Requests for interconnection via methods, such as OCn level interconnection, other than as set forth in this Attachment may be made through the Bona Fide Request (BFR) process set out in Attachment 11.

3.2.1 Each Party is responsible for providing, engineering and maintaining the network on its side of the IP. The IP must be located within BellSouth's serving territory in the LATA in which traffic is originating. The IP determines the point at which the originating Party shall pay the terminating Party for the Call Transport and Termination of Local Traffic, and ISP-bound Traffic.

3.2.2 Pursuant to the provisions of this Attachment, the location of the initial IP in a given LATA shall be established by mutual agreement of the Parties. Subject to the requirements for installing additional IPs, as set forth below, any IPs existing prior to the Effective Date of the Agreement will be accepted as initial IPs and BellSouth will not require re-grooming, however, KMC III may augment and re-groom such IP(s). When the Parties mutually agree to utilize two-way interconnection trunk groups for the exchange of Local Traffic, ISP-bound Traffic and between each other, the Parties shall mutually agree to the location of the IP. Notwithstanding the foregoing, if the Parties are unable to agree to a mutual initial IP, each Party, as originating Party, shall establish a single IP in the LATA for the delivery of its originated Local Traffic, ISP-bound Traffic and to the other Party for Call Transport and Termination by the terminating Party.

3.2.3 When first establishing the interconnection arrangement in each LATA, the location of the IP shall be established by mutual agreement of the Parties. In selecting the IP, both Parties will act in good faith and select the point that is most efficient for both Parties. If the Parties are unable to agree on the location of the IP, each Party will designate IPs for its originated traffic. Additional IP(s) in a LATA may be established by mutual agreement of the Parties. In selecting additional IP(s) both Parties will act in good faith and shall consider points that are efficient for both Parties. Notwithstanding the foregoing, and unless mutually agreed to otherwise, additional IP(s) in a particular LATA shall be established, at the request of either Party, when the following criteria are satisfied: (1) the Local Traffic and ISP-bound Traffic exceeds 8.9 million minutes per month for three (3) consecutive months at the proposed location of the additional IP; and (2) any end office to be designated as an IP must be more than twenty (20) miles from an existing IP. BellSouth will not request the establishment of an IP where physical or virtual collocation space is not available or where BellSouth fiber connectivity is not available. When the Parties agree to utilize two-way interconnection trunk groups for the exchange of Local Traffic, ISP-bound Traffic and the Parties must agree to the location of the additional IP(s).

3.2.4 Upon written notification from the Party requesting the establishment of an additional IP, the receiving Party has twenty (20) business days to analyze, respond to, and negotiate in good faith regarding the establishment of such IP.

3.3 <u>Interconnection via Dedicated Facilities</u>

3.3.1 With the exception of Transit Traffic, the Parties shall institute a “bill and keep” compensation plan under which neither Party will charge the other Party recurring and nonrecurring charges for trunks (i.e., one-way or two-way), trunk ports and associated dedicated facilities for the exchange of Local Traffic (non-transit) and ISP-bound Traffic (non-transit) and 911 traffic. The appropriate rate elements that are subject to this “bill and keep” compensation plan are set forth in Exhibit A. Each Party has the obligation to install and maintain the appropriate trunks, trunk

ports and associated facilities on its respective side of the IP and is responsible for bearing its costs for such trunks, trunk ports and associated facilities on its side of the IP. Both Parties, as appropriate, shall be compensated for the ordering of trunks, trunk ports and facilities used exclusively for transit traffic and for ancillary traffic types including, but not limited to OS/DA. The Parties agree that charges for such trunks, trunk ports and facilities are as set forth in Exhibit A or to the extent a rate associated with the interconnecting trunk group is not set forth in Exhibit A, the rate shall be as set forth in the appropriate Party's tariff as filed and effective with the FCC or Commission, or reasonable and non-discriminatory web-posted listing if the FCC or Commission does not require filing of a tariff.

3.3.2 Local Channel Facilities. In lieu of providing facilities on its side of Interconnection Point or as part of Call Transport and Termination, either Party may purchase Local Channel facilities from the other Party pursuant to the provisions of this Attachment, where such facilities are available. The percentage of Local Channel Facilities utilized for Local Traffic and ISP-bound Traffic shall be determined based upon the application of the Percent Local Facility (PLF) Factor on a statewide basis. The charges applied to the percentage of Local Channel facilities used for Local Traffic and ISP-bound Traffic as determined by the PLF are set forth in Section 3.3.1 above. The remaining percentage of Local Channel Facilities shall be billed at the appropriate Party's intrastate or interstate tariff rates for switched access services or reasonable and non-discriminatory web-posted listing if the FCC or Commission does not require filing of a tariff.

3.3.3 Dedicated Interoffice Facilities. In lieu of providing facilities on its side of Interconnection Point or as part of Call Transport and Termination, either Party may purchase Dedicated Interoffice facilities from the other Party pursuant to the provisions of this Attachment, where such facilities are available. The percentage of Dedicated Interoffice Facilities utilized for Local Traffic and ISP-bound Traffic shall be determined based upon the application of the PLF Factor on a statewide basis. The charges applied to the percentage of Dedicated Interoffice facilities used for Local Traffic and ISP-bound Traffic as determined by the PLF are set forth in Section 3.3.1 above. The remaining percentage of the Dedicated Interoffice Facilities shall be billed at the appropriate Party's intrastate or interstate tariff rates for switched access services or reasonable and non-discriminatory web-posted listing if the FCC or Commission does not require filing of a tariff.

3.3.4 In the event that a Party's point of presence is located within its designated Serving Wire Center, such Party may interconnect to the other Party's switch located in the same Serving Wire Center via a cross connect as defined in this Agreement or such Party may interconnect via any other technically feasible method as described herein. If a Party provisions a cross connect for the purposes of interconnection under this Attachment 3, and such cross connect is not associated with a physical or virtual collocation arrangement, the provisioning party shall not charge for such cross connect. When a cross connect is made in the provisioning of Local

Interconnection facilities/services, the providing Party will not charge the other Party a Local Channel Facility rate for such cross connect.

3.3.5 The facilities and associated components as set forth in Exhibit A purchased pursuant to this Section 3 shall be ordered via the Access Service Request (ASR) process. The terms, conditions and rates for ordering charges (i.e., expedite, cancellation, and order modification charges) are as set forth in the BellSouth FCC No. 1 Tariff. To the extent that BellSouth requests that KMC III submit an ASR for an augmentation to the facilities purchased by KMC III from BellSouth but utilized for BellSouth's originated traffic, the Parties will work in good faith and make best efforts to ensure that the ASR submitted for such augmentations does not require expedition, cancellation or modification and in the event that KMC III incurs ordering charges, BellSouth and KMC III shall work cooperatively to determine which Party caused the incurrence of such charges and that Party shall be responsible for such charges.

3.4 Fiber Meet

3.4.1 Notwithstanding Sections 3.2.1, 3.2.2, and 3.2.3 above, if KMC III elects to establish interconnection with BellSouth pursuant to a Fiber Meet Local Channel, KMC III and BellSouth shall jointly engineer, operate and maintain a Synchronous Optical Network (SONET) transmission system by which they shall interconnect their transmission and routing of Local Traffic via a Local Channel at either the DS1 or DS3 level. The Parties shall work jointly to determine the specific transmission system. However, KMC III's SONET transmission system must be compatible with BellSouth's equipment, and the Data Communications Channel (DCC) must be turned off, unless otherwise mutually agreed to by the Parties.

3.4.2 Each Party, at its own expense, shall procure, install and maintain the agreed upon SONET transmission system in its network.

3.4.3 The Parties shall agree to a Fiber Meet point between the BellSouth Serving Wire Center and the KMC III Serving Wire Center. The Parties shall deliver their fiber optic facilities to the Fiber Meet point with sufficient spare length to reach the fusion splice point for the Fiber Meet Point. BellSouth shall, at its own expense, provide and maintain the fusion splice point for the Fiber Meet. A building type Common Language Location Identification (CLLI) code will be established for each Fiber Meet point. All orders for interconnection facilities from the Fiber Meet point shall indicate the Fiber Meet point as the originating point for the facility.

3.4.4 Upon verbal request by KMC III, and within a reasonable and non-discriminatory time frame, BellSouth shall allow KMC III access to the fusion splice point for the Fiber Meet point for maintenance purposes on KMC III 's side of the Fiber Meet point.

3.4.5 Neither Party shall charge the other for its Local Channel portion of the Fiber Meet facility used exclusively for Local Traffic and ISP-Bound Traffic. The remaining portion of the Local Channel shall be billed at the appropriate Party's intrastate or interstate tariff rates for switched access services or reasonable and non-discriminatory web-posted listing if the FCC or Commission does not require filing of a tariff.

4. INTERCONNECTION TRUNK GROUP ARCHITECTURES

4.1 BellSouth and KMC III shall establish interconnecting trunk groups and trunk group configurations between networks, including the use of one (1)-way or two (2)-way trunks in accordance with the following provisions set forth in this Attachment**.** For trunking purposes, traffic will be routed based on the digits dialed by the originating customer and in accordance with the LERG.

4.2 Consistent with Sections 3.2, 3.2.1, 3.2.2, and 3.3.3. KMC III shall establish an interconnection trunk group(s) to at least one BellSouth access tandem within the LATA for the delivery of KMC III 's originated Local Traffic, ISP-bound Traffic and for the receipt and delivery of Transit Traffic. To the extent KMC III desires to deliver Local Traffic, ISP-bound Traffic, and/or Transit Traffic to BellSouth access tandems within the LATA, other than the tandems(s) to which KMC III has established interconnection trunk groups, KMC III shall order Multiple Tandem Access, as described in this Attachment, to such other BellSouth access tandems.

4.2.1 Notwithstanding the forgoing, KMC III shall establish an interconnection trunk group(s) to all BellSouth access and local tandems in the LATA where KMC III has homed (i.e., assigned) its NPA/NXXs. KMC III shall home its NPA/NXXs on the BellSouth tandems that serve the exchange rate center areas to which the NPA/NXXs are assigned. The specified exchange rate center assigned to each BellSouth tandem is defined in the LERG. KMC III shall enter its NPA/NXX access and/or local tandem homing arrangements into the LERG.

4.3 Switched access traffic will be delivered to and from Interexchange Carriers (IXCs) based on KMC III 's NXX access tandem homing arrangement as specified by KMC III in the LERG.

4.4 Any KMC III interconnection request that (1) deviates from the interconnection trunk group architectures as described in this Attachment, (2) affects traffic delivered to KMC III from a BellSouth switch, and (3) requires special BellSouth switch translations and other network modifications will require KMC III to submit a BFR/NBR via the BFR/NBR Process as set forth in Attachment 11. At such time that BellSouth submits a request for interconnection that meets the requirements of this section, the Parties will negotiate the rates, terms, and conditions for such request.

4.5 All trunk groups will be provisioned as Signaling System 7 (SS7) capable where technically feasible. If SS7 is not technically feasible multi-frequency (MF) protocol signaling shall be used.

4.6 In cases where KMC III is also an IXC, the IXC's Feature Group D (FG D) trunk group(s) must remain separate from the local interconnection trunk group(s).

4.7 Each Party shall order interconnection trunks and trunk group including trunk and trunk group augmentations via the ASR process. A Firm Order Confirmation (FOC) shall be returned to the ordering Party, after receipt of a valid, error free ASR, within the timeframes set forth in each state's applicable Performance Measures. Notwithstanding the foregoing, blocking situations and projects shall be managed through BellSouth's Carrier Interconnection Switching Center (CISC) Project Management Group and KMC III's equivalent trunking group, and FOCs for such orders shall be returned in the timeframes negotiated by the Parties and suitable to the project. No additional charges shall be triggered due to the involvement of such project management. A project is defined as (1) a new trunk group, excluding augments to existing routes or trunk groups already provided for pursuant to the terms of this Attachment or (2) a request for more than ninety-six (96) trunks on a single or multiple group(s) in a given BellSouth local calling area.

4.8 Interconnection Trunk Groups for Exchange of Local Traffic, ISP-bound Traffic and Transit Traffic

Upon mutual agreement of the Parties in a joint planning meeting, the Parties' shall exchange Local Traffic, ISP-bound Traffic and Transit Traffic, where applicable, on two (2)-way interconnection trunk group(s) with the quantity of trunks being mutually determined and the provisioning being jointly coordinated. Furthermore, the Parties shall agree upon the IP(s) for two (2)-way interconnection trunk groups transporting both Parties' Local Traffic, ISP-bound Traffic, and Transit Traffic, where applicable as set forth in Section 3 above. KMC III shall order such two (2)-way trunks via the ASR process. BellSouth will use the Trunk Group Service Request (TGSR) to request changes in trunking. Furthermore, the Parties shall jointly review trunk performance and forecasts on a periodic basis as set forth in Section 7 below. The Parties' use of two-way interconnection trunk groups for the transport of Local Traffic, ISP-bound Traffic, and Transit Traffic between the Parties does not preclude either Party from establishing additional one-way interconnection trunks for the delivery of its originated Local Traffic, ISP-bound Traffic and Transit Traffic to the other Party.

4.8.1 BellSouth Access Tandem Interconnection

BellSouth access tandem interconnection at a single access tandem provides access to those end offices subtending that access tandem (Intratandem Access). Access tandem interconnection is available for any of the following access tandem architectures

4.8.1.1 Basic Architecture

In the basic architecture, KMC III's originating Local Traffic, ISP-bound Traffic and originating and terminating Transit Traffic is transported on a single two-way trunk group between KMC III and BellSouth access tandem(s) within a LATA to provide Intratandem Access. This trunk group carries Transit Traffic between KMC III and ICOs, IXCs, other CLECs, CMRS providers that have a Meet Point Billing (MPB) arrangement with BellSouth, and other network providers with which KMC III desires to exchange traffic. This trunk group also carries KMC III originated Transit Traffic transiting a single BellSouth access tandem destined to third party tandems such as an ICO tandem or other CLEC tandem. BellSouth originated Local Traffic, ISP-bound Traffic and is transported on a separate single one-way trunk group terminating to KMC III. Other trunk groups for operator services, directory assistance, emergency services and intercept may be established pursuant to the applicable BellSouth tariff if service is requested. The LERG contains current routing and tandem serving arrangements. The basic Architecture is illustrated in Exhibit B.

4.8.1.2 <u>One-Way Trunk Group Architecture</u>

In one-way trunk group architecture, the Parties interconnect using three separate trunk groups. A one-way trunk group provides Intratandem Access for KMC III-originated Local Traffic, ISP-bound Traffic and destined for BellSouth customers. A second one (1)-way trunk group carries BellSouth-originated Local Traffic, ISP-bound Traffic and destined for KMC III customers. A two (2)-way trunk group provides Intratandem Access for KMC III's originating and terminating Transit Traffic. This trunk group carries Transit Traffic between KMC III and ICOs, IXCs, other CLECs, CMRS providers that have a MPB arrangement with BellSouth, and other network providers with which KMC III desires to exchange traffic. This trunk group also carries KMC III originated Transit Traffic transiting a single BellSouth access tandem destined to third party tandems such as an ICO tandem or other CLEC tandem. BellSouth originated Local Traffic, ISP-bound Traffic and is transported on a separate single one-way trunk group terminating to KMC III. Other trunk groups for operator services, directory assistance, emergency services and intercept may be established pursuant to the applicable BellSouth tariff if service is requested. The LERG contains current routing and tandem serving arrangements. The one (1)-way trunk group architecture is illustrated in Exhibit C.

4.8.1.3 <u>Two-Way Trunk Group Architecture</u>

The two-way trunk group Architecture establishes one (1) two (2)-way trunk group to provide Intratandem Access for the exchange of Local Traffic, ISP-bound Traffic and between KMC III and BellSouth. In addition, a separate two (2)-way transit trunk group must be established for KMC III's originating and terminating Transit Traffic. This trunk group carries Transit Traffic between KMC III and ICOs, IXC, other CLECs, CMRS providers that have a MPB arrangement with BellSouth, and other network providers with which KMC III desires to exchange traffic. This trunk group also carries KMC III originated Transit Traffic transiting

a single BellSouth access tandem destined to third party tandems such as an ICO tandem or other CLEC tandem. Upon reasonable notice, either Party's originated traffic may, in order to prevent or remedy traffic blocking situations, be transported on a separate single one-way trunk group terminating to the other Party. However, where KMC III is responsive in a timely manner to BellSouth's transport needs for its originated traffic, BellSouth originating traffic will be placed on the two-way Local Traffic trunk group carrying ISP-bound Traffic. Other trunk groups for operator services, directory assistance, emergency services and intercept may be established pursuant to the applicable BellSouth tariff if service is requested. The LERG contains current routing and tandem serving arrangements. The two (2)-way trunk group architecture is illustrated in Exhibit D.

4.8.1.4 Supergroup Architecture

In the supergroup architecture, the Parties' Local Traffic, ISP-bound Traffic and KMC III's Transit Traffic are exchanged on a single two-way trunk group between KMC III and BellSouth to provide Intratandem Access to KMC III. This trunk group carries Transit Traffic between KMC III and ICOs, IXCs, other CLECs, CMRS providers that have a MPB arrangement with BellSouth, and other network providers with which KMC III desires to exchange traffic. This trunk group also carries KMC III originated Transit Traffic transiting a single BellSouth access tandem destined to third party tandems such as an ICO tandem or other CLEC tandem. Upon reasonable notice, either Party's originated traffic may, in order to prevent or remedy traffic blocking situations, be transported on a separate single one-way trunk group terminating to the other Party. However, where KMC III is responsive in a timely manner to BellSouth's transport needs for its originated traffic, BellSouth originating traffic will be placed on the Supergroup. Other trunk groups for operator services, directory assistance, emergency services and intercept may be established pursuant to the applicable BellSouth tariff if service is requested. The LERG contains current routing and tandem serving arrangements. The supergroup architecture is illustrated in Exhibit E.

4.8.1.5 Multiple Tandem Access Interconnection

4.8.1.5.1 Where KMC III does not choose access tandem interconnection at every BellSouth access tandem within a LATA, KMC III may utilize BellSouth's multiple tandem access interconnection (MTA). To utilize MTA KMC III must establish an interconnection trunk group(s) at a BellSouth access tandem through multiple BellSouth access tandems within the LATA as required. BellSouth will route KMC III's originated Local Traffic, ISP-bound Traffic and for LATA wide transport and termination. KMC III must also establish an interconnection trunk group(s) at all BellSouth access tandems where KMC III NXXs are homed as described in Section 4.2.1 above. If KMC III does not have NXXs homed at any particular BellSouth access tandem within a LATA and elects not to establish an interconnection trunk group(s) at such BellSouth access tandem, KMC III can order MTA in each BellSouth access tandem within the LATA where it does have an interconnection trunk group(s) and BellSouth will terminate KMC III's Local

Traffic, ISP-bound Traffic and to End-Users served through those BellSouth access tandems where KMC III does not have an interconnection trunk group(s). MTA shall be provisioned in accordance with BellSouth's Ordering Guidelines.

4.8.1.5.2 KMC III may also utilize MTA to route its originated Transit Traffic; provided, however, that MTA may not be utilized to route switched access traffic that transits the BellSouth network to an IXC. Switched access traffic originated by or terminated to KMC III will be delivered to and from IXCs based on KMC III's NXX access tandem homing arrangement as specified by KMC III in the LERG.

4.8.1.5.3 Compensation for MTA shall be at the applicable tandem switching and transport charges specified in Exhibit A and shall be billed in addition to any Call Transport and Termination charges.

4.8.1.5.4 To the extent KMC III does not purchase MTA in a LATA served by multiple access tandems, KMC III must establish an interconnection trunk group(s) to every access tandem in the LATA to serve the entire LATA. To the extent KMC IIIroutes its traffic in such a way that utilizes BellSouth's MTA service without properly ordering MTA, KMC III shall pay BellSouth the associated MTA charges.

4.8.2 <u>Local Tandem Interconnection</u>

4.8.2.1 Local Tandem Interconnection arrangement allows KMC III to establish its IP, pursuant to the provisions of this Attachment, and the associated interconnection trunk group(s) at BellSouth local tandems for: (1) the delivery of KMC III-originated Local Traffic, ISP-bound Traffic and transported and terminated by BellSouth to BellSouth end offices served by those BellSouth local tandems, and (2) for local Transit Traffic transported by BellSouth for third party network providers who have also established an interconnection trunk group(s) at those BellSouth local tandems.

4.8.2.2 When a specified local calling area is served by more than one BellSouth local tandem, KMC III must designate a "home" local tandem for each of its assigned NPA/NXXs and establish trunk connections to such local tandems. Additionally, KMC III may choose to establish an interconnection trunk group(s) at the BellSouth local tandems where it has no codes homing but is not required to do so. KMC III may deliver Local Traffic, ISP-bound Traffic and to a "home" BellSouth local tandem that is destined for other BellSouth or third party network provider end offices subtending other BellSouth local tandems in the same local calling area where KMC III does not choose to establish an interconnection trunk group(s). It is KMC III's responsibility to enter its own NPA/NXX local tandem homing arrangements into the LERG either directly or via a vendor in order for other third party network providers to determine appropriate traffic routing to KMC III's codes. Likewise, KMC III shall obtain its routing information from the LERG.

4.8.2.3 Notwithstanding establishing an interconnection trunk group(s) to BellSouth's local tandems, KMC III must also establish an interconnection trunk group(s) to a BellSouth access tandem within the LATA on which KMC III has NPA/NXXs homed for the delivery of Interexchange Carrier Switched Access (SWA) and toll traffic, and traffic to Type 2A CMRS connections located at the access tandems. BellSouth shall not switch SWA traffic through more than one BellSouth access tandem. SWA, Type 2A CMRS or toll traffic routed to the local tandem in error will not be backhauled to the BellSouth access tandem for completion. (Type 2A CMRS interconnection is defined in BellSouth's A35 General Subscriber Services Tariff (GSST)).

4.8.2.4 BellSouth's provisioning of Local Tandem Interconnection assumes that KMC III has executed the necessary local interconnection agreements with the other third party network providers subtending those local tandems as required by the Act.

4.8.3 Direct End Office-to-End Office Interconnection

4.8.3.1 Direct End Office-to-End Office one (1)-way or two (2)-way interconnection trunk groups allow for the delivery of a Party's originating Local Traffic, ISP-bound Traffic and to the terminating Party on a direct end office-to-end office basis.

4.8.3.2 The Parties may utilize direct end office-to-end office trunk groups under any one of the following conditions:

4.8.3.2.1 Tandem Exhaust. If a tandem through which the Parties are interconnected is unable to, or is forecasted to be unable to support additional traffic loads for the Parties or any other carrier for any period of time, the Parties will endeavor to mutually agree on an end office trunking plan or an appropriate alternate routing plan that will alleviate the tandem capacity shortage and ensure completion of traffic between KMC III and BellSouth.

4.8.3.2.2 Traffic Volume. To the extent either Party has the capability to measure the amount of traffic between KMC III's switch and a BellSouth end office switch, and where such traffic exceeds or is forecasted to exceed a single DS3 (i.e., 8.9 million minutes) of traffic for three consecutive months, then the Parties shall install and maintain direct end office trunking sufficient to handle such traffic volumes. Either Party will install and maintain additional capacity between such points when overflow traffic exceeds or is forecasted to exceed a single DS3 (i.e., 8.9 million minutes) of traffic for three consecutive months. In the case of one-way trunking, additional trunking shall only be required by the Party whose trunking has achieved the preceding usage threshold.

4.8.3.2.3 Mutual Agreement. The Parties may install direct end office trunking upon mutual agreement in the absence of conditions (1) or (2) above.

4.8.3.3 Overflow Routing. To the extent technically feasible and where appropriate, BellSouth will provide overflow routing consistent with how BellSouth overflows its traffic. The overflow will be based on the homing arrangements displayed in the LERG.

4.8.4 Transit Traffic Trunk Group

Transit Traffic trunks can either be two-way trunks or two (2) one (1)-way trunks ordered by KMC III to deliver and receive Transit Traffic. Establishing Transit Traffic trunks at BellSouth access and local tandems provides intratandem access to the third parties also interconnected at those tandems.

4.8.5 Toll Free Traffic

4.8.5.1 If KMC III chooses BellSouth to perform the Service Switching Point (SSP) Function (i.e., handle Toll Free database queries) from BellSouth's switches, all KMC III originating Toll Free traffic will be routed over the Transit Traffic Trunk Group and shall be delivered using GR-394 format. Carrier Code "0110" and Circuit Code (to be determined for each LATA) shall be used for all such calls.

4.8.5.2 KMC III may choose to perform its own Toll Free database queries from its switch. In such cases, KMC III will determine the nature (local/intraLATA/interLATA) of the Toll Free call (local/IntraLATA/InterLATA) based on the response from the database. If the call is a BellSouth local or intraLATA Toll Free call, KMC III will route the post-query local or IntraLATA converted ten-digit local number to BellSouth over the local or intraLATA trunk group. If the call is a third party (ICO, IXC, CMRS or other CLEC) local or intraLATA Toll Free call, KMC III will route the post-query local or intraLATA converted ten (10)-digit local number to BellSouth over the Transit Traffic Trunk Group and KMC III shall provide to BellSouth a Toll Free billing record when appropriate. If the query reveals the call is an interLATA Toll Free call, KMC III will route the post-query interLATA Toll Free call (1) directly from its switch for carriers interconnected with its network or (2) over the Transit Traffic Trunk Group to carriers that are not directly connected to KMC III's network but that are connected to BellSouth's access tandem.

4.8.5.3 All post-query Toll Free calls for which KMC III performs the SSP function, if delivered to BellSouth, shall be delivered using GR-394 format for calls destined to IXCs, and GR-317 format for calls destined to end offices that directly subtend a BellSouth access tandem within the LATA.

4.8.6 High Volume Calling (Mass Calling) Trunk Groups

4.8.6.1 The Parties will cooperate to establish separate trunk groups, or provide some other means of protective controls (i.e., call gapping), for the completion of calls to high volume customers, such as radio contest lines.

4.8.6.2 Both parties agree to terminate each Party's mass calling codes as Local Traffic, where appropriate. The Parties agree that each will put in place controls for NXXs that are dedicated for media stimulated mass calling.

5. NETWORK DESIGN AND MANAGEMENT FOR INTERCONNECTION

5.1 Network Management and Changes. The Parties will work cooperatively with each other to install and maintain the most effective and reliable interconnected telecommunications networks, including but not limited to the exchange of toll-free maintenance contact numbers and escalation procedures. The Parties will provide public notice of network changes in the information necessary for the transmission and routing of services using their local exchange facilities and networks, to the extent required by, and in accordance with applicable federal and state rules and regulations.

5.2 Interconnection Technical Standards. The interconnection of all networks will be based upon accepted industry/national guidelines for transmission standards and traffic blocking criteria. Interconnecting facilities shall conform, at a minimum, to the telecommunications industry standard of DS1 pursuant to Telcordia Standard No. TR-NWT-00499. Where KMC III chooses to utilize Signaling System 7 signaling, also known as Common Channel Signaling (CCS), SS7 connectivity is required between the KMC III switch and the BellSouth Signaling Transfer Point (STP). BellSouth will provide SS7 signaling using Common Channel Signaling Access Capability (CCSAC) in accordance with the technical specifications set forth in the BellSouth Guidelines to Technical Publication, TR-TSV-000905. Facilities of each Party shall provide the necessary on-hook, off-hook answer and disconnect supervision and shall provide calling number ID (Calling Party Number) when technically feasible.

5.3 Quality of Interconnection. The local interconnection for the transmission and routing of telephone exchange service and exchange access that each Party provides to each other will be at least Equal in Quality to what it provides to itself and any subsidiary or affiliate, where technically feasible, or to any other Party to which each Party provides local interconnection.

5.3.1 In the event of an outage or trouble in any arrangement, facility, or service being provided by BellSouth hereunder, BellSouth will follow procedures for isolating and clearing the outage or trouble that are no less favorable than those that apply to comparable arrangements, facilities, or services being provided by BellSouth to itself, Affiliate or any other carrier whose network is connected to that of BellSouth.

5.3.2 "Equal in Quality" shall have the meaning accorded in 47 C.F.R. § 51.305(a)(3). As soon as possible and in no case later than twenty-four (24) hours after receipt of notification of blocking of traffic originated within the other Party's network,

the Parties shall determine and begin work to implement reasonable corrective measures in a manner consistent with industry practices.

5.4 Network Management Controls. Both Parties will work cooperatively to apply sound network management principles by invoking appropriate network management controls (e.g., call gapping) to alleviate or prevent network congestion.

6. SIGNALING

6.1 BellSouth shall offer access to signaling and access to BellSouth's signaling databases subject to compatibility testing and at the rates set forth in this Attachment. BellSouth may provide mediated access to BellSouth signaling systems and databases. Available signaling elements include signaling links, signal transfer points and service control points. Signaling functionality will be available with both A-link and B-link connectivity.

6.1.1 Both Parties will utilize LEC-to-LEC SS7 Signaling, where available, in conjunction with all traffic in order to enable full interoperability of CLASS features and functions except for call return. All SS7 signaling parameters will be provided, including but not limited to automatic number identification (ANI), originating line information (OLI) calling company category and charge number.

6.2 Signaling Link Transport

6.2.1 Signaling Link Transport is a set of two (2) or four (4) dedicated fifty-six (56) kilobits (kbps) transmission paths between KMC III designated Signaling Points of Interconnection that provide appropriate physical diversity.

6.2.2 Technical Requirements

6.2.2.1 Signaling Link Transport shall consist of full duplex mode fifty-six (56) kbps transmission paths and shall perform in the following two (2) ways:

6.2.2.2 An "A-link" Signaling Link Transport is a connection between a switch or SCP and a STP switch pair; and

6.2.2.3 As a "B-link" Signaling Link Transport is a connection between two (2) STP switch pairs in different company networks (e.g., between two (2) STP switch pairs for two (2) CLECs).

6.2.3 Signaling Link Transport shall consist of signaling link layers as follows:

6.2.3.1 An A-link layer shall consist of two (2) links. There shall be no more than two (2) minutes down time per year for an A-link layer.

6.2.3.2 A B-link layer shall consist of four (4) links. There shall be negligible (less than two (2) seconds) down time per year for a B-link layer.

6.2.4 A signaling link layer shall satisfy interoffice and intraoffice diversity of facilities and equipment, such that:

6.2.4.1 No single failure of facilities or equipment causes the failure of both links in an A-link layer (i.e., the links should be provided on a minimum of two (2) separate physical paths end-to-end); and

6.2.4.2 No two (2) concurrent failures of facilities or equipment shall cause the failure of all four (4) links in a B-link layer (i.e., the links should be provided on a minimum of three (3) separate physical paths end-to-end).

6.2.5 Interface Requirements

6.2.5.1 There shall be a DS1 (1.544 Mbps) interface at KMC III's designated SPOIs. Each 56 kbps transmission path shall appear as a DS0 channel within the DS1 interface.

6.3 STP

6.3.1 A Signaling Transfer Point is a signaling network function that includes all of the capabilities provided by the signaling transfer point switches (STPs) and their associated signaling links that enables the exchange of SS7 messages among and between switching elements, database elements and STPs.

6.3.2 Technical Requirements

6.3.2.1 STPs shall provide access to BellSouth Local Switching or Tandem Switching and to BellSouth Service Control Points/Databases connected to BellSouth SS7 network. STPs also provide access to third party local or tandem switching and third party provided STPs.

6.3.2.2 The connectivity provided by STPs shall fully support the functions of all other Network Elements connected to the BellSouth SS7 network. This includes the use of the BellSouth SS7 network to convey messages that neither originate nor terminate at a signaling end point directly connected to the BellSouth SS7 network (i.e., transit messages). When the BellSouth SS7 network is used to convey transit messages, there shall be no alteration of the Integrated Services Digital Network User Part (ISDNUP) or Transaction Capabilities Application Part (TCAP) user data that constitutes the content of the message.

6.3.2.3 STPs shall provide all functions of the SCCP necessary for Class 0 (basic connectionless) service, as defined in Telcordia ANSI Interconnection

Requirements. This includes Global Title Translation (GTT) and SCCP Management procedures, as specified in ANSI T1.112.4. Where the destination signaling point is a KMC III or third party local or tandem switching system directly connected to BellSouth SS7 network, BellSouth shall perform final GTT of messages to the destination and SCCP Subsystem Management of the destination. In all other cases, BellSouth shall perform intermediate GTT of messages to a gateway pair of STPs in an SS7 network connected with the BellSouth SS7 network, and shall not perform SCCP Subsystem Management of the destination. If BellSouth performs final GTT to a KMC III database, then KMC III agrees to provide BellSouth with the Destination Point Code for KMC III database.

6.3.2.4 STPs shall provide all functions of the Operations, Maintenance and Administration Part (OMAP) as specified in applicable industry standard technical references, which may include, where available in BellSouth's network, MTP Routing Verification Test (MRVT); and SCCP Routing Verification Test (SRVT).

6.3.2.5 Where the destination signaling point is a BellSouth local or tandem switching system or database, or is a KMC III or third party local or tandem switching system directly connected to the BellSouth SS7 network, STPs shall perform MRVT and SRVT to the destination signaling point. In all other cases, STPs shall perform MRVT and SRVT to a gateway pair of STPs in an SS7 network connected with the BellSouth SS7 network. This requirement may be superseded by the specifications for Internetwork MRVT and SRVT when these become approved ANSI standards and available capabilities of BellSouth STPs.

6.4 <u>SS7 Advanced Intelligent Network (AIN) Access</u>

6.4.1 <u>Interface Requirements</u>

6.4.1.1 BellSouth shall provide the following STP options to connect KMC III or KMC III-designated local switching systems to the BellSouth SS7 network:

6.4.1.1.1 An A-link interface from KMC III local switching systems; and,

6.4.1.1.2 A B-link interface from KMC III local STPs.

6.4.1.2 Each type of interface shall be provided by one (1) or more layers of signaling links.

6.4.1.3 The SPOI for each link shall be located at a cross connect element in the central office where the BellSouth STP is located.

6.4.1.4 BellSouth shall provide intraoffice diversity between the SPOI and BellSouth STPs, so that no single failure of intraoffice facilities or equipment shall cause the failure of both B-links in a layer connecting to a BellSouth STP.

6.4.1.5 STPs shall provide all functions of the MTP as defined in the applicable industry standard technical references.

6.4.2 Message Screening

6.4.2.1 BellSouth shall set message screening parameters so as to accept/send valid messages from KMC III local or tandem switching systems destined to/from any signaling point within BellSouth's SS7 network where the KMC III switching system has a valid signaling relationship.

6.4.2.2 BellSouth shall set message screening parameters so as to accept/send valid messages from KMC III local or tandem switching systems destined to/from any signaling point or network accessed through BellSouth's SS7 network where the KMC III switching system has a valid signaling relationship.

6.4.3 SCPs/Databases

6.4.3.1 Call Related Databases provide the storage of, access to, and manipulation of information required to offer a particular service and/or capability. BellSouth shall provide access to the following Databases: Local Number Portability (LNP), Line Information Database (LIDB), Toll Free Number Database, Automatic Location Identification/Data Management System (ALI/DMS), and Calling Name Database (CNAM). BellSouth also provides access to Service Creation Environment and Service Management System (SCE/SMS) application databases and Directory Assistance.

6.4.3.2 An SCP is deployed in a SS7 network that executes service application logic in response to SS7 queries sent to it by a switching system also connected to the SS7 network. Service Management Systems provide operational interfaces to allow for provisioning, administration and maintenance of subscriber data and service application data stored in SCPs.

6.4.4 Technical Requirements for SCPs/Databases

6.4.4.1 BellSouth shall provide physical access to SCPs through the SS7 network and protocols with TCAP as the application layer protocol.

6.4.4.2 BellSouth shall provide physical interconnection to databases via industry standard interfaces and protocols (e.g., SS7, ISDN and X.25).

6.4.4.3 The reliability of interconnection options shall be consistent with requirements for diversity and survivability.

6.5 LNP Database

6.5.1 The Permanent Number Portability (PNP) database supplies routing numbers for calls involving numbers that have been ported from one local service provider to another. BellSouth agrees to provide access to the PNP database at rates, terms and conditions as set forth by BellSouth and in accordance with an effective FCC or Commission directive.

6.6 SS7 Network Interconnection

6.6.1 SS7 Network Interconnection is the interconnection of KMC III local STPs or KMC III local or tandem switching systems with BellSouth STPs. This interconnection provides connectivity that enables the exchange of SS7 messages among BellSouth switching systems and databases, KMC III local or tandem switching systems, and other third party switching systems directly connected to the BellSouth SS7 network.

6.6.2 The connectivity provided by SS7 Network Interconnection shall fully support the functions of BellSouth switching systems and databases and KMC III or other third party switching systems with A-link access to the BellSouth SS7 network.

6.6.3 If traffic is routed based on dialed or translated digits between a KMC III local switching system and a BellSouth or other third-party local switching system, either directly or via a BellSouth tandem switching system, then it is a requirement that the BellSouth SS7 network convey via SS7 Network Interconnection the TCAP messages that are necessary to provide Call Management services (e.g., Automatic Callback, Automatic Recall, and Screening List Editing) between the KMC III local STPs and BellSouth or other third-party local switch.

6.6.4 SS7 Network Interconnection shall provide:

6.6.4.1 Signaling Data Link functions, as specified in ANSI T1.111.2;

6.6.4.2 Signaling Link functions, as specified in ANSI T1.111.3; and

6.6.4.3 Signaling Network Management functions, as specified in ANSI T1.111.4.

6.6.5 SS7 Network Interconnection shall provide all functions of the SCCP necessary for Class 0 (basic connectionless) service, as specified in ANSI T1.112. This includes GTT and SCCP Management procedures, as specified in ANSI T1.112.4. Where the destination signaling point is a BellSouth switching system or database, or is another third party local or tandem switching system directly connected to the

BellSouth SS7 network, SS7 Network Interconnection shall include final GTT of messages to the destination and SCCP Subsystem Management of the destination. Where the destination signaling point is a KMC III local or tandem switching system, SS7 Network Interconnection shall include intermediate GTT of messages to a gateway pair of KMC III local STPs, and shall not include SCCP Subsystem Management of the destination.

6.6.6 SS7 Network Interconnection shall provide all functions of the ISDNUP, as specified in ANSI T1.113.

6.6.7 SS7 Network Interconnection shall provide all functions of the TCAP, as specified in ANSI T1.114.

6.6.8 If Internetwork MRVT and SRVT become approved ANSI standards and available capabilities of BellSouth STPs, SS7 Network Interconnection may provide these functions of the OMAP.

6.6.9 Interface Requirements

6.6.9.1 The following SS7 Network Interconnection interface options are available to connect KMC III or KMC III-designated local or tandem switching systems or STPs to the BellSouth SS7 network:

6.6.9.1.1 A-link interface from KMC III local or tandem switching systems; and

6.6.9.1.2 B-link interface from KMC III STPs.

6.6.9.2 The SPOI for each link shall be located at a cross-connect element in the central office where the BellSouth STP is located. There shall be a DS1 or higher rate transport interface at each of the SPOIs. Each signaling link shall appear as a DS0 channel within the DS1 or higher rate interface.

6.6.9.3 BellSouth shall provide intraoffice diversity between the SPOIs and the BellSouth STP, so that no single failure of intraoffice facilities or equipment shall cause the failure of both B-links in a layer connecting to a BellSouth STP.

6.6.9.4 The protocol interface requirements for SS7 Network Interconnection include the MTP, ISDNUP, SCCP, and TCAP. These protocol interfaces shall conform to the applicable industry standard technical references. BellSouth does not have the capability to support any of the VoIP interfaces at the present time but is willing to negotiate new protocol interfaces IAW 7.7.8.

6.6.9.5 BellSouth shall set message screening parameters to accept messages from KMC III local or tandem switching systems destined to any signaling point in the

BellSouth SS7 network with which the KMC III switching system has a valid signaling relationship.

6.7 Rate Categories And Applications

6.7.1 Message Charges

6.7.1.1 Message charges, as set forth in Section 6.7.1.3 below, are assessed based on the type of message protocol, ISUP or TCAP. ISUP messages are associated with call set-up, while TCAP messages are used to query call related databases. ISUP message charges are assessed per terminating and originating call set-up request and TCAP message charges are assessed per data request.

6.7.1.2 Message charges do not apply for TCAP messages switched by the regional STPs to the BellSouth provided 800 Data Base, LIDB or LNP Database. Query charges are assessed in lieu of message charges. Query charges for 800 Data Base are described in Section 6.8.5 below. When TCAP messages are destined for a foreign database, including a non-company provided LNP Database, message charges are assessed in lieu of query charges.

6.7.1.3 Message charges are assessed in the following manner:

6.7.1.3.1 Signal Formulation

6.7.1.3.1.1 An ISUP Signal Formulation charge is assessed, per call set-up request, for terminating and originating formulating signaling messages in association with call set-up.

6.7.1.3.2 Signal Transport

6.7.1.3.2.1 An ISUP Signal Transport charge is assessed, per call set-up request, for signaling messages transported to and from the Company STP in association with call set-up.

6.7.1.3.2.2 A TCAP Signal Transport charge is assessed per data request transported to a BellSouth STP and destined for a foreign database.

6.7.1.3.3 Signal Switching

6.7.1.3.3.1 An ISUP Signal Switching charge is assessed per call set-up request that is switched at the Company STP for terminating and originating messages.

6.7.1.3.3.2 A TCAP Signal Switching charge is assessed for each data request that is switched by the Company STP and destined for a foreign network or database.

6.7.1.3.4 Query Charges

6.7.1.3.4.1 Query charges apply for queries to the Company LIDB and the LNP Database. When query charges apply for access to a Company provided database, message charges are not assessed. LIDB Query Charges are described in 6.8.3, following and the LNP Database Query Charge is described in Section 6.8.4 following.

6.7.1.4 TCAP Bill and Keep

6.7.1.4.1 The Parties agree to treat signaling messages, signaling ports, and signaling links associated with local calls on a bill and keep basis.

6.7.1.4.2 KMC III and BellSouth agree that BellSouth will bill KMC III for signaling links, signaling ports, and signaling messages associated with interstate calls and with intrastate non-local calls in accordance with BellSouth's interstate and intrastate tariffs.

6.7.1.4.3 Beginning on the Effective Date of this Agreement and continuing until KMC III implements a system that is capable of counting the total number of signaling messages that traveled over facilities connecting KMC III's CCS7 network and BellSouth's CCS7 network, BellSouth agrees that for the purposes of billing BellSouth for signaling messages for any given month, KMC III may use the total number of signaling messages that BellSouth's signaling bill to KMC III indicates have traveled over facilities connecting KMC III's CCS7 network and BellSouth's CCS7 network for that same month. When KMC III implements a system that is capable of counting the total number of signaling messages that travel over facilities connecting KMC III's CCS7 network and BellSouth's CCS7 network, KMC III will use the number of signaling messages counted by such system for the purposes of billing BellSouth for signaling messages, subject to BellSouth's right to contest the accuracy of the number of signaling messages counted by such system.

6.7.1.4.4 For the purposes of billing BellSouth for signaling messages, KMC III will apply the Signaling Percent Interstate Usage/Signaling Percent Local Usage (SPIU/SPLU) provided by BellSouth (which can, at BellSouth's option, be the same as the Percent Interstate Usage/Percent Local Usage (PIU/PLU) that BellSouth provides for minutes of use) to the number of messages calculated pursuant to Paragraph 6.8.1.4.3 above.

6.8 RATES AND CHARGES ASSOCIATED WITH SS7

6.8.1	Message Charge for ISUP Messages	RATE
	Per signaling message	Bill & Keep

6.8.2	Message Charge for TCAP Messages	RATE
	Per signaling message	Bill& Keep

6.8.3 LIDB Service

	RATE PER QUERY
Per Access Transport Query	Exhibit A of Attachment 2 for UNE-P Only, Tariff Rate for All Others
Per Validation Service Query	Exhibit A of Attachment 2 for UNE-P Only, Tariff Rate for All Others
Per OLNS Service Query	Tariff Rate

6.8.4 LNP Database Service

Per LNP Query	Exhibit A of Attachment 2 for UNE-P Only

Negotiated Rates Pursuant to a Separate Agreement for All Others

6.8.5 800 Database Service

Per 800 Query	Exhibit A of Attachment 2 for UNE-P Only, Tariff Rate for All Others

7. FORECASTING FOR TRUNK PROVISIONING

7.1 Within six (6) months after execution of this Agreement, KMC III shall provide an initial interconnection trunk group forecast for each LATA in which it plans to provide service within BellSouth's region. BellSouth shall then provide to KMC III reciprocal trunking forecasts. BellSouth's reciprocal trunking forecasts will be based upon information provided by KMC III in the initial forecast. If KMC III refuses to provide such information, BellSouth shall provide reciprocal trunking forecasts based only on existing trunk group growth and BellSouth's annual estimated percentage of BellSouth subscriber line growth. After the exchange of each Party's forecast, the Parties shall conduct a joint planning meeting to develop a joint interconnection trunk group forecast. Each forecast provided under this Section shall be deemed "Confidential Information" under the General Terms and Conditions of this Agreement.

7.2 The Parties shall use best efforts to make the initial and annual subsequent forecasts as accurate as possible based on reasonable engineering criteria. In addition, the Parties agree to proactively manage their interconnection trunking arrangements and use best efforts to timely notify each other if forecasted need quantities change or if a known or anticipated network event that may create a blocking situation is likely to occur during the time period between joint planning meetings. Joint planning meetings shall be conducted via conference call, unless mutual agreement is reached otherwise.

7.3 At a minimum, the joint forecast shall include the projected quantity of Transit Trunks, KMC III-to-BellSouth one-way trunks (KMC III Trunks), BellSouth-to-KMC III one-way trunks (Reciprocal Trunk Groups) and/or two-way interconnection trunks, if the Parties have agreed to interconnect using two-way trunking to transport the Parties' Local Traffic, ISP-bound Traffic. The quantities shall be projected for a minimum of six (6) months and shall include an estimate of the current year plus the next two (2) years total forecasted quantities. The Parties shall mutually develop Reciprocal Trunk Groups and/or two-way interconnection trunk forecast quantities

7.4 All forecasts shall include, at a minimum, Access Carrier Terminal Location (ACTL), trunk group type (local/intraLATA toll, Transit, Operator Services, 911, etc.), A location/Z location (CLLI codes for KMC III location and BellSouth location where the trunks shall terminate), interface type (e.g., DS1), Direction of Signaling, Trunk Group Number, if known, (commonly referred to as the two-six (2-6) code and forecasted trunks in service each year (cumulative).

7.5 Once initial interconnection trunk forecasts have been developed, KMC III shall continue to provide interconnection trunk forecasts on an annual basis or at otherwise mutually agreeable intervals. KMC III shall use its best efforts to make the forecasts as accurate as possible based on reasonable engineering criteria. The Parties shall continue to exchange Reciprocal Trunk Group and/or two-way interconnection trunk forecasts as described in Section 7.1 above.

7.6 The submitting and development of interconnection trunk forecasts shall not replace the ordering process for local interconnection trunks. Each Party shall exercise its best efforts to provide the quantity of interconnection trunks mutually forecasted. However, the provision of the forecasted quantity of interconnection trunks is subject to trunk terminations and facility capacity existing at the time the trunk order is submitted and the provisioning Party shall not be responsible for a lack of interconnection trunks provided that the provisioning Party can establish that best efforts and good faith have been exercised. Furthermore, the receipt and development of trunk forecasts does not imply any liability for failure to perform if capacity (trunk terminations or facilities) is not available for use at the forecasted time.

8. TRUNK UTILIZATION

8.1 For the Reciprocal Trunk Groups that cannot overflow traffic to another trunk group (Reciprocal Final Trunk Groups), BellSouth and KMC III shall monitor traffic on each interconnection Reciprocal Final Trunk Group that is ordered and installed. The Parties agree that the Reciprocal Final Trunk Groups will be utilized at 60 percent (60%) of the time consistent busy hour utilization level within one hundred twenty (120) days of installation. The Parties agree that the Reciprocal Final Trunk Groups will be utilized at eighty percent (80%) of the time consistent busy hour utilization level within one hundred eighty (180) days of installation. Any Reciprocal Final Trunk Group not meeting the minimum thresholds set forth in this Section are defined as "Under-utilized" trunks. BellSouth may disconnect any Under-utilized Reciprocal Final Trunk Groups and, for trunks not in excess of KMC III's forecast, KMC III shall refund to BellSouth the associated nonrecurring and recurring trunk and facility charges paid by BellSouth, if any.

8.1.1 Any Reciprocal Final Trunk Group not meeting the minimum thresholds set forth in this Section are defined as "Under-Utilized" trunks. BellSouth's CISC will notify KMC III of any under-utilized Reciprocal Trunk Groups and the number of such trunk groups that BellSouth wishes to disconnect. BellSouth will provide supporting information either by email or facsimile to the designated KMC III interface. KMC III will provide concurrence with the disconnection in ten (10) business days or will provide specific information supporting why the trunks should not be disconnected. Such supporting information should include expected traffic volumes (including traffic volumes generated due to Local Number Portability) and the timeframes within which KMC III expects to need such trunks. BellSouth's CISC Project Manager and Circuit Capacity Manager will discuss the information with KMC III to determine if agreement can be reached on the number of Reciprocal Final Trunk Groups to be removed. If no agreement can be reached, BellSouth will issue disconnect orders to KMC III. The due date of these orders will be thirty (30) calendar days after KMC III was first notified in writing of the underutilization of the trunk groups, unless otherwise agreed to by the Parties. When BellSouth issues disconnect orders to KMC III for any Under-utilized Reciprocal Final Trunk Groups, KMC III shall refund to BellSouth the associated nonrecurring and recurring trunk and facility charges paid by BellSouth to KMC III, if any.

8.1.2 To the extent that any interconnection trunk group is utilized at a time-consistent busy hour of eighty percent (80%) or greater, the Parties may review the trunk groups and, if necessary, shall negotiate in good faith for the installation of augmented facilities.

8.2 For the two-way trunk groups that cannot overflow traffic to another trunk group and other than alternate final trunk groups, BellSouth and KMC III shall monitor traffic on each interconnection trunk group that is ordered and installed. The Parties agree that within one hundred twenty (120) days of the installation of the BellSouth two (2)-way trunk or trunks, the trunks will be utilized at 60 percent

(60%) of the time consistent busy hour utilization level. The Parties agree that within one hundred eighty (180) days of the installation of a trunk or trunks, the trunks will be utilized at eighty percent (80%) of the time consistent busy hour utilization level. Any trunk or trunks not meeting the minimum thresholds set forth in this Section are defined as "Under-utilized" trunks. BellSouth will request the disconnection of any Under-utilized two-way trunk(s) and, for trunks not in excess of KMC III's forecast, KMC III shall refund to BellSouth the associated nonrecurring and recurring trunk and facility charges paid by BellSouth, if any.

8.2.1 BellSouth's LISC will notify KMC III of any under-utilized two-way trunk groups and the number of trunks that BellSouth wishes to disconnect. BellSouth will provide supporting information either by email or facsimile to the designated KMC III interface. KMC III will provide concurrence with the disconnection in ten (10) business days or will provide specific information supporting why the two-way trunks should not be disconnected. Such supporting information should include expected traffic volumes (including traffic volumes generated due to Local Number Portability) and the timeframes within which KMC III expects to need such trunks. BellSouth's CISC Project Manager and Circuit Capacity Manager will discuss the information with KMC III to determine if agreement can be reached on the number of trunks to be removed. If no agreement can be reached, KMC III will issue disconnect orders to BellSouth. The due date of these orders will be thirty (30) calendar days after KMC III was first notified in writing of the underutilization of the trunk groups, unless otherwise agreed to by the Parties.

8.2.2 To the extent that any interconnection trunk group is utilized at a time-consistent busy hour of eighty percent (80%) or greater, the Parties shall review the trunk groups and, if necessary, shall negotiate in good faith for the installation of augmented facilities.

9. INTERFERENCE OR IMPAIRMENT

9.1 As soon as possible and in no case later than twenty-four (24) hours after receipt of notification of blocking of traffic originated within the other Party's network, the Parties shall determine and begin work to implement reasonable corrective measures in a manner consistent with industry practices.

9.2 In the event of an outage or trouble in any arrangement, facility, or service being provided by BellSouth hereunder, BellSouth will follow procedures for isolating and clearing the outage or trouble that are no less favorable than those that apply to comparable arrangements, facilities, or services being provided by BellSouth to itself, Affiliate or any other carrier whose network is connected to that of BellSouth.

9.3 BellSouth will use best efforts to provide KMC III with at least thirty (30) days advance notification of scheduled maintenance activity. Upon such notice, KMC III may submit a reasonable request for additional information relevant to the

scheduled maintenance activity and BellSouth shall provide such information to the extent the scheduled maintenance activity may impact KMC III and such information is reasonably necessary for KMC III to identify and analyze potential risks associated with such maintenance. BellSouth may expedite or delay scheduled maintenance as a result of unscheduled maintenance or other unforeseen events. In those instances where BellSouth will not perform scheduled maintenance at the announced times, BellSouth will make best efforts to provide KMC III with as much notice as is reasonably possible concerning the changed schedule.

9.4 For switch software/processor updates, software upgrades/new releases to the SONET transport network elements, or other major scheduled events which might impact KMC III, BellSouth shall use best efforts to provide KMC III with at least thirty (30) days advance notification of scheduled maintenance activity. Upon such notice, KMC III may submit a reasonable request for additional information relevant to the scheduled maintenance activity and BellSouth shall provide such information to the extent the scheduled maintenance activity may impact KMC III and such information is reasonably necessary for KMC III to identify and analyze potential risks associated with such maintenance.

9.5 BellSouth will provide KMC III's Network Operations Center with written notice when translations are scheduled to be modified on KMC III's trunk groups. BellSouth shall use best efforts to provide such notice thirty (30) days in advance of such scheduled activity, or as close thereto as possible.

9.6 Once KMC III determines that there is an outage that encompasses either a particular section of the network or the whole network, then KMC III shall generate a trouble ticket to the CISC. After issuing the trouble ticket, KMC III will notify the appropriate BellSouth representative in the CISC via telephone. KMC III may then send an email confirmation to such BellSouth representative. BellSouth will work cooperatively with KMC III to determine the appropriate steps to resolve such outage. Additionally, KMC III will provide BellSouth with any applicable information that is necessary to resolve such outage and the Parties will work cooperatively to take all steps necessary to resolve the outage.

9.7 A "Global Outage" is an outage as defined as set forth in 47 C.F.R. § 63.100, including but not limited to trunk group outages. BellSouth will provide initial notification to KMC III of a Global Outage in accordance with BellSouth's Operational Understanding Guide. Subsequent to the initial notification of a Global Outage, KMC III may contact the CISC via normal procedures (e.g., electronic mail, phone, etc.) to request further information, including but not limited to the method used to restore service and steps taken to prevent the recurrence of the incident. BellSouth will provide such information in a written report to KMC III as soon as such information is available to BellSouth and no

later than thirty (30) days following the Global Outage. The aforementioned written report shall include the following information where available:

- Reporting Carrier
- Date Of Incident
- Time Of Incident
- Geographic Area Affected
- Types Of Services Affected
- Outage Duration
- Background Of The Incident
- Direct Cause
- Root Cause
- Methods Used To Restore Service
- Steps Taken To Prevent Recurrence Of The Incident

10. COMPENSATION FOR CALL TRANSPORTATION AND TERMINATION FOR LOCAL TRAFFIC AND ISP-BOUND TRAFFIC

10.1 For the purposes of this Attachment and for reciprocal compensation between the Parties pursuant to this Attachment, Local Traffic is defined as any circuit switched call that is originated by an end user of one Party and terminated to an end user of the other Party within a given LATA on that other Party's network, except for those calls that are originated or terminated through switched access arrangements as established by applicable FCC or Commissions rules and orders. Additionally, Local Traffic includes any cross boundary, intrastate, interLATA or interstate interLATA calls established as a local call by the ruling regulatory body.

10.2 ISP-bound Traffic is defined as a call to an information service provider/enhanced service provider or Internet Service Provider (ISP) that is dialed by using a local dialing pattern (seven (7) or ten (10) digits).

10.3 For the per minute of use rate elements associated with Call Transport and Termination, the Parties shall compensate each other at the composite rate of $0.0007 for Local Traffic and ISP-bound Traffic subject to the ceiling on minutes of use as set forth below.

10.3.1 For ISP-bound Traffic exchanged from February 1, 2004 through the Expiration Date of this Agreement, compensation as set forth above shall be billed by the terminating Party to the originating Party on the ISP-bound minutes up to a ceiling of ISP-bound minutes, which shall be calculated as set forth in the ISP Order on Remand. The Parties shall exchange data to determine the appropriate volume of minutes to be utilized.

10.3.2 In the event that the Parties disagree as to the amount of minutes utilized to calculate the ceiling on minutes of use as described herein, the Parties will assign representatives to identify the cause of such discrepancy and determine if the parties can mutually agree as to the appropriate ceiling on minutes of use. In the event that the Parties are unable to reach agreement, either Party may pursue resolution through the Dispute Resolution process set forth in this Agreement.

10.3.3 Any ISP-bound Traffic that exceeds the minute of use ceiling set forth above shall be exchanged on a bill and keep basis.

10.4 Notwithstanding the definitions of Local Traffic and ISP-bound Traffic in this Attachment, and pursuant to the FCC's Order on Remand and Report and Order in CC Docket 99- 68 released April 27, 2001 (ISP Order on Remand), BellSouth and KMC III agree to the rebuttable presumption that all combined Local and ISP-bound Traffic delivered to BellSouth or KMC III that exceeds a 3:1 ratio of terminating to originating traffic on a statewide basis shall be considered ISP-bound Traffic for compensation purposes. BellSouth and KMC III further agree to the rebuttable presumption that all combined Local and ISP-bound Traffic delivered to BellSouth or KMC III that does not exceed a 3:1 ratio of terminating to originating traffic on a statewide basis shall be considered Local Traffic for compensation purposes.

10.5 The appropriate composite rates set forth in Exhibit A shall apply for Transit Traffic as described in this Attachment and the appropriate elemental rates for Multiple Tandem Access shall apply as described in this Attachment.

10.6 Neither Party shall represent Switched Access Traffic as Local Traffic or ISP-bound Traffic for purposes of determining compensation for the call.

10.7 The Parties have been unable to agree as to whether non-ISP bound Virtual NXX Traffic constitutes Switched Access Traffic. Notwithstanding the foregoing, and without waiving any rights with respect to either Party's position as to the jurisdictional nature of non-ISP-bound Virtual NXX Traffic, the Parties agree to amend this Agreement in accordance with the General Terms and Conditions to this Agreement to abide by any effective and applicable FCC and Commission rules and orders regarding the nature of such traffic and the compensation payable by the Parties for such traffic, if any.

10.7.1 The Parties have been unable to agree on the treatment of calls where KMC III assigns NPA/NXXs to specific BellSouth rate centers within the LATA and assigns numbers from those NPA/NXXs to KMC III customers physically located outside of that LATA and such customers are Internet Service Providers (ISPs). Notwithstanding the foregoing, and without waiving any rights with respect to either Party's position as to the treatment of such calls, the Parties agree that, for purposes of this Agreement, traffic delivered to a customer that is an ISP physically located outside of such LATA shall be considered ISP-bound Traffic as defined in this Attachment.

10.8 Jurisdictional Reporting

10.8.1 PLU. Each Party shall report to the other a Percent Local Usage (PLU) factor. The application of the PLU will determine the amount of local or ISP-bound minutes to be billed to the other Party. Local Traffic and ISP-bound Traffic shall be treated as Local for purposes of calculating the PLU. Requirements associated with PLU calculation and reporting shall be as set forth in BellSouth's Jurisdictional Factors Reporting Guide, as it is amended from time to time.

10.8.2 Percent Local Facility (PLF). Each Party shall report to the other a PLF factor. The application of the PLF will determine the portion of switched dedicated transport to be billed per the local jurisdiction rates. The PLF shall be applied to Multiplexing, Local Channel and Interoffice Channel Switched Dedicated Transport utilized in the provision of local interconnection trunks. Local Traffic and ISP-bound Traffic shall be treated Local for the purposes of calculating the PLF. Requirements associated with PLF calculation and reporting shall be as set forth in BellSouth's Jurisdictional Factors Reporting Guide.

10.8.3 PIU. Each Party shall report to the other the projected PIU factor. After interstate and intrastate traffic percentages have been determined by use of PIU procedures, the PLU and PLF factors will be used for application and billing of local interconnection. Requirements associated with PIU calculation and reporting shall be as set forth in BellSouth Jurisdictional Factors Reporting Guide.

10.8.4 In Lieu of Jurisdictional Factors Reported. Notwithstanding the provisions in Sections 10.3.1, 10.3.2, and 10.3.3 above, where the terminating Party has message recording technology that identifies the jurisdiction of traffic terminated as defined in this Agreement, such information may, at the terminating Party's option, be utilized to determine the appropriate jurisdictional reporting factors, in lieu of those provided by the originating Party. In the event that the terminating Party opts to utilize its own data to determine jurisdictional reporting factors, such terminating Party shall notify the originating Party at least thirty (30) days prior to the beginning of the calendar quarter in which the terminating Party will begin to utilize its own data.

10.8.4.1 Upon the request of the originating Party, the terminating Party shall provide supporting data for the jurisdictional factors proposed by the terminating Party to be used in lieu of those reported by the originating Party. The originating Party shall have thirty (30) days to consent or object to the proposed replacement of reported factors. If the originating Party consents or fails to respond within thirty (30) days, the terminating Party may proceed with the replacement of factors effective at the beginning of the calendar quarter. If the originating Party objects to the proposed replacement of reported factors, the Parties shall proceed as set forth below.

10.8.4.2 Upon either Party's request, the Parties will work in good faith to resolve the discrepancy between the factors submitted by the originating party and those proposed by the terminating party pursuant to Section 10.8.4 above. In the event that the Parties are unable to mutually agree as to the appropriate resolution, the Parties may negotiate a mutually agreeable resolution based on the data specific to the traffic patterns of the originating party or either Party may request an audit of the factors in accordance with Section 10.8.5 below. In the event that negotiations and audits fail to resolve disputes between the parties, either Party may seek Dispute Resolution as set forth in the General Terms and Conditions. While such a dispute is pending, factors reported by the originating Party shall remain in place, unless the Parties mutually agree otherwise.

10.8.5 Audits. On thirty (30) days written notice, each Party must provide the other the ability and opportunity to conduct an annual audit of the jurisdictional reporting factors as reported or utilized pursuant to this Attachment 3 to ensure the proper billing of traffic. BellSouth and KMC III shall retain records of call detail for a minimum of nine months from which the jurisdictional reporting factors can be ascertained. The audit shall be conducted during normal business hours at an office designated by the Party being audited. Audit requests shall not be submitted more frequently than one (1) time per calendar year. The Parties shall use commercially reasonable efforts to complete audits in as timely a manner as possible. Audits shall be performed by a mutually acceptable independent auditor paid for by the Party requesting the audit. The jurisdictional reporting factors shall be adjusted based upon the audit results and shall apply for the quarter the audit was completed, for the quarter prior to the completion of the audit, and for the two quarters following the completion of the audit. If, as a result of an audit, either Party is found to have overstated jurisdictional reporting factors by twenty percentage points (20%) or more, that Party shall reimburse the auditing Party for the cost of the audit.

10.9 Compensation for 8XX Traffic

10.9.1 Each Party shall pay the other the appropriate switched access charges set forth in the BellSouth intrastate Access Services Tariff or BellSouth FCC No. 1 Tariff.

KMC III will pay BellSouth the database query charge as set forth in the BellSouth intrastate Access Services Tariff or BellSouth FCC No. 1 Tariff as applicable.

10.9.2 Records for 8XX Billing. Each Party will provide to the other the appropriate records necessary for billing intraLATA 8XX end users. The records provided will be in a standard EMI format.

10.9.3 8XX Access Screening. BellSouth's provision of 8XX Toll Free Dialing (TFD) to KMC III requires interconnection from KMC III to BellSouth's 8XX SCP. Such interconnections shall be established pursuant to BellSouth's CCS Interconnection Guidelines and Telcordia's CCS Network Interface Specification document, TR-TSV-000905. KMC III shall establish SS7 interconnection at the BellSouth Local Signal Transfer Points serving the BellSouth 8XX SCPs that KMC III desires to query. The terms and conditions for 8XX TFD are set out in BellSouth's intrastate Access Services Tariff.

10.10 Mutual Provision of Switched Access Service

10.10.1 Switched Access Traffic. Switched Access Traffic is described as telephone calls requiring local transmission or switching services for the purpose of the origination or termination of Telephone Toll Service. Switched Access Traffic includes, but is not limited to, the following types of traffic: Feature Group A, Feature Group B, Feature Group C, Feature Group D, toll free access (e.g., 8XX), and 900 access. Switched Access Traffic does not include Local Traffic and ISP-bound Traffic originated by one Party and terminated by the other.

10.10.2 Voice-Over-Internet-Protocol (VoIP) Transmissions. The Parties have been unable to agree as to whether "Voice-Over-Internet-Protocol" transmissions, which cross LATA boundaries constitute Switched Access Service Traffic. Notwithstanding the foregoing, and without waiving any rights with respect to either Party's position as to the jurisdictional nature of VoIP, the Parties agree to amend this Agreement in accordance with the General Terms and Conditions to this Agreement to abide by any effective and applicable FCC rules and orders regarding the nature of such traffic and the compensation payable by the Parties for such traffic, if any.

10.10.3 If the BellSouth customer chooses KMC III as their presubscribed interexchange carrier, or if the BellSouth customer uses KMC III as an interexchange carrier on a 101XXXX basis, BellSouth will charge KMC III the appropriate BellSouth tariff charges for originating switched access services.

10.10.4 When one (1) Party's end office switch, subtending the other Party's Access Tandem switch for receipt or delivery of switched access traffic, provides an access service connection to or from an IXC by either a direct trunk group to the IXC utilizing the other Party's facilities, or via the other Party's tandem switch, each Party will provide its own access services to the IXC and bill on a multi-bill,

multi-tariff meet-point basis. Each Party will bill its own access services rates to the IXC with the exception of the interconnection charge. The interconnection charge will be billed by the Party providing the end office function. The Parties will use the Multiple Exchange Carrier Access Billing (MECAB) guidelines to establish meet point billing for all applicable traffic. Thirty (30)-day billing periods will be employed for these arrangements. To the extent either party is providing the tandem function, that party (i.e., Initial Billing Company) agrees to provide to the other company (i.e., Subsequent Billing Company), as defined in MECAB, at no charge, the switched access detailed usage data within no more than sixty (60) days after the recording date where technically feasible. Each company will notify the other when it determines that it is not feasible to meet these requirements so that the customers may be notified for any necessary revenue accrual associated with the significantly delayed recording or billing. As business requirements change, data reporting requirements may be modified as necessary, by mutual agreement of the Parties or per a change in industry standards.

10.10.5 In the event that the Initial Billing Party, as defined herein, was provided the accurate switched access detailed usage data in a manner that allowed the Initial Billing Party to generate and provide such data to the Subsequent Billing Party within ninety (90) days after the recording date and where the Initial Billing Party failed to provide notice to the Subsequent Billing Party of any inability to provide such data within a reasonable and nondiscriminatory timeframe and the Subsequent Billing Party is unable to bill and/or collect access revenues due to the Initial Billing Party's failure to provide such data within said time period, then the Initial Billing Party shall be liable to the other Party in an amount equal to the unbillable or uncollectible revenues. Each company will provide complete documentation to the other to substantiate any claim of such unbillable or uncollectible revenues. In the event that the Parties disagree as to the liability of the Initial Billing Party for such unbillable or uncollectible revenues, then either Party may invoke the Dispute Resolution process set forth in General Terms and Conditions.

10.10.6 The Initial Billing Company will retain for a minimum period of sixty (60) days, access message detail sufficient to recreate any data that is lost or damaged by the tandem provider company or any third party involved in processing or transporting data. Initial Billing Company agrees to recreate the lost or damaged data within forty-eight (48) hours of notification by the other or by an authorized third party handling the data.

10.10.7 Initial Billing Company also agrees to process the recreated data within forty-eight (48) hours of receipt at its data processing center.

10.10.8 All claims for unbillable or uncollectible revenue should be filed with the Initial Billing Company within one hundred twenty (120) days of the date the receipt of the usage record.

10.10.9 The Initial Billing Party shall keep records of its billing activities relating to jointly-provided Intrastate and Interstate Switched Access Traffic Services in sufficient detail to permit the Subsequent Billing Party to, by formal or informal review or audit, to verify the accuracy and reasonableness of the jointly-provided access billing data provided by the Initial Billing Party. Each Party agrees to cooperate in such formal or informal reviews or audits and further agrees to jointly review the findings of such reviews or audits in order to resolve any differences concerning the findings thereof. In the absence of mutual agreement otherwise, the Audit provisions set forth in Section 10.8.5 above shall govern.

10.11 Transit Traffic

10.11.1 Each Party shall provide tandem switching and transport services for the other Party's Transit Traffic. Rates for Local Transit Traffic and ISP-bound Transit Traffic shall be as set forth below:

10.11.1.1 The composite rate of $0.0025 per minute of use will apply from the Effective Date of the Agreement through March 31, 2006.

10.11.1.2 Beginning April 1, 2006 the composite rate of $0.0030 per minute of use will apply.

10.11.1.3 Neither party may invoke Section 17.4 of the Modification of Agreement in General Terms and Conditions until January 1, 2007, after which either Party may pursue the Modification of Agreement process to prospectively incorporate the applicable rate for a state ordered by that Commission.

10.11.2 Rates for Switched Access Transit Traffic shall be the applicable charges as set forth in the applicable Party's Commission approved Interstate or Intrastate Switched Access tariffs as filed and effective with the FCC or Commission, or reasonable and non-discriminatory web-posted listing if the FCC or Commission does not require filing of a tariff. Billing associated with all Transit Traffic shall be pursuant to MECAB guidelines.

10.11.3 Traffic between KMC III and Wireless Type 1 third parties or a third party CLEC utilizing BellSouth switching (including resellers and UNE-P providers) shall not be treated as Transit Traffic from a routing or billing perspective. Traffic originated by a Wireless Type 1 third party or a third party CLEC utilizing BellSouth switching (including resellers and UNE-P providers) shall be treated as BellSouth-originated traffic and BellSouth shall compensate KMC III for transport and termination of such traffic based on the classification of such traffic as Local Traffic, ISP-bound Traffic, or Switched Access Traffic in accordance with the terms of this Attachment, until such time as BellSouth can provide the records necessary to identify the Wireless Type 1 third party or the third party CLEC utilizing BellSouth switching.

10.11.4 Traffic between KMC III and Wireless Type 2A third parties shall not be treated as Transit Traffic from a routing or billing perspective until BellSouth and the Wireless Type 2A carrier have the capability to properly meet-point-bill in accordance with MECAB guidelines. Until such time, such traffic originated by Wireless Type 2A third parties shall be treated as BellSouth-originated traffic and BellSouth shall compensate KMC III for transport and termination of such traffic based on the classification of such traffic as Local Traffic, ISP-bound Traffic, or Switched Access Traffic in accordance with the terms of this Attachment.

10.11.5 Traffic between BellSouth and Wireless Type 1 third parties or a third party CLEC utilizing KMC III switching shall not be treated as Transit Traffic from a routing or billing perspective. Such traffic originated by a Wireless Type 1 third party or a third party CLEC utilizing KMC III switching shall be treated as KMC III-originated traffic and KMC III shall compensate BellSouth for transport and termination of such traffic based on the classification of such traffic as Local Traffic, ISP-Bound Traffic or Switched Access Traffic in accordance with the terms of this Attachment.

10.11.6 Traffic between BellSouth and Wireless Type 2A third parties shall not be treated as Transit Traffic from a routing or billing perspective until KMC III and the Wireless Type 2A carrier have the capability to properly meet-point-bill in accordance with MECAB guidelines. Until such time, such traffic originated by Wireless Type 2A third parties shall be treated as KMC III-originated traffic and KMC III shall compensate BellSouth for transport and termination of such traffic based on the classification of such traffic as Local Traffic, ISP-bound Traffic, or Switched Access Traffic in accordance with the terms of this Attachment.

10.11.7 BellSouth agrees to deliver Transit Traffic originated by KMC III to the terminating carrier; provided, however, that KMC III is solely responsible for negotiating and executing any appropriate contractual agreements with the terminating carrier for the exchange of Transit Traffic through the BellSouth network. BellSouth will not be liable for any compensation to the terminating carrier or to KMC III for transiting KMC III-originated or terminated Transit Traffic. In the event that the terminating third party carrier imposes on BellSouth any charges or costs for the delivery of Transit Traffic originated by KMC III, KMC III shall reimburse BellSouth for all charges paid by BellSouth, provided that BellSouth notifies KMC III and, upon request, provides KMC III with a copy of such an invoice, if available, or other equivalent supporting documentation (if an invoice is not available), and proof of payment and other applicable supporting documentation. BellSouth will use commercially reasonable efforts to provide such notice and information in a timely, reasonable and nondiscriminatory manner. BellSouth shall diligently review, dispute and pay such third party invoices (or equivalent) in a manner that is at parity with its own practices for reviewing, disputing and paying such invoices (or equivalent) when no similar reimbursement provision applies. Once KMC III reimburses BellSouth for any such payments, any

disputes with respect to such charges shall be between KMC III and the terminating third party carrier. Additionally, the Parties agree that any billing to a third party or other telecommunications carrier under this section shall be pursuant to MECAB procedures.

10.11.8 Except for as provided otherwise in this Attachment, transit charges as described in this Attachment shall only be assessed on the carrier originating Transit Traffic and shall not be assessed on the terminating carrier.

10.11.9 Transit charges associated with the provisioning of toll free services (e.g., 800/888/877) shall be assessed upon the terminating carrier and shall not be imposed on the originating carrier.

10.12 Exchange of Traffic Subject to Primary Toll Provider Arrangements

10.12.1 Where BellSouth is the primary intraLATA toll provider for an ICO's customers (i.e., BellSouth receives from the ICO the intraLATA toll revenue paid by the customers) and where such ICO originates an intraLATA toll call that transits BellSouth's network and is terminated by KMC III, BellSouth and KMC III will work cooperatively together to determine the appropriate amount of usage to be paid by BellSouth for such traffic. BellSouth shall route such traffic over transit traffic trunk groups, where technically feasible, and will pass appropriate OLI associated with these calls, where technically feasible. KMC III will bill BellSouth at KMC III's intrastate switched access rate as set forth in KMC III's access tariff as filed and effective with the Commission or non-discriminatory web-posted listing if the FCC or Commission does not require filing of a tariff.

10.12.2 Where KMC III originates traffic that transits BellSouth's network and it is terminated by an ICO and where the ICO asserts that it has a legal right to charge BellSouth switched access for the termination of such traffic and charges BellSouth switched access for such traffic, which BellSouth pays to the ICO, KMC III agrees to reimburse BellSouth for the actual charges assessed by the ICO to BellSouth (and paid by BellSouth) for the KMC III originated calls. All reimbursement billing by BellSouth to KMC III shall be covered by the Billing Dispute provisions of this Agreement. This provision does not apply when KMC III has a direct relationship with the ICOs and has notified BellSouth of said relationship.

10.12.3 KMC III and BellSouth agree to conduct a semi-annual true-up in order to adjust for the appropriate ICO transit usage to be billed to or paid by each party.

10.13 Misrouting of Traffic.

10.13.1 The Parties shall route traffic to each other in a manner consistent with the Trunk Group Architectures selected by the Parties and as set forth in Section 4 above, except as otherwise set forth in this Agreement (e.g., overflow) or in instances

where a third party causes either Party to route traffic in a manner that is inconsistent with this Attachment.

10.13.2 In instances of misrouting, either Party may request that the Parties investigate, identify the cause of, and correct misrouting to the extent technically and economically feasible.

10.13.3 In the event that misrouting results in either Party's inability to bill or collect revenues from a third party and the Parties disagree as to the liability of the other Party for such revenues, then either Party may pursue the Dispute Resolution procedures set forth in this Agreement.

10.14 Records Exchange

10.14.1 Where feasible and appropriate, the Parties will generate and exchange all available messages for the purpose of billing third parties, including but not limited to CMRS providers and other LECs.

11. FRAME RELAY SERVICE INTERCONNECTION

11.1 In addition to the Local Interconnection services set forth above, BellSouth will offer a network-to-network Interconnection arrangement between BellSouth's and KMC III's frame relay switches as set forth below. The following provisions will apply only to Frame Relay Service and Exchange Access Frame Relay Service and Managed Shared Frame Relay Service in those states in which KMC III is certified and providing Frame Relay Service as a Local Exchange Carrier and where traffic is being exchanged between KMC III and BellSouth Frame Relay Switches in the same LATA.

11.2 The Parties agree to establish two-way Frame Relay facilities between their respective Frame Relay Switches to the mutually agreed upon Frame Relay Service point(s) of interconnection (IP(s)) within the LATA. All IPs shall be within the same Frame Relay Network Serving Areas as defined in Section A40 of BellSouth's GSST except as set forth in this Attachment.

11.3 Upon the request of either Party, such interconnection will be established where BellSouth and KMC III have Frame Relay Switches in the same LATA. Where there are multiple Frame Relay switches in one central office, an interconnection with any one of the switches will be considered an interconnection with all of the switches at that central office for purposes of routing packet traffic.

11.4 The Parties agree to provision local and intraLATA Frame Relay Service and Exchange Access Frame Relay Service and Managed Shared Frame Relay Service (both intrastate and interstate) over Frame Relay interconnection facilities between the respective Frame Relay switches and the IPs.

11.5 The Parties agree to assess each other reciprocal charges for the facilities that each provides to the other according to the Percent Local Circuit Use Factor (PLCU), determined as follows:

11.5.1 If the data packets originate and terminate in locations in the same LATA, and are consistent with the local definitions of the Agreement, the traffic is considered local. Frame Relay framed packet data is transported within Virtual Circuits (VC). For the purposes of this Agreement, if all the data packets transported within a VC remain within the LATA, then consistent with the local definitions in this Agreement, the traffic on that VC is local (Local VC).

11.5.2 If the originating and terminating locations of the two-way packet data traffic are not in the same LATA, the traffic on that VC is interLATA (InterLATA VC).

11.5.3 The PLCU is determined by dividing the total number of Local VCs, by the total number of VCs on each Frame Relay facility. To facilitate implementation, KMC III may determine its PLCU in aggregate, by dividing the total number of Local VCs in a given LATA by the total number VCs in that LATA. The Parties agree to renegotiate the method for determining PLCU, at BellSouth's request, and within 90 days, if BellSouth notifies KMC III that it has found that this method does not adequately represent the PLCU.

11.5.4 If there are no VCs on a facility when it is billed, the PLCU will be zero (0).

11.5.5 BellSouth will provide the circuit between the Parties' respective Frame Relay Switches. The Parties will be compensated as follows: BellSouth will invoice, and KMC III will pay, the total nonrecurring and recurring charges for the circuit based upon the rates set forth in BellSouth's FCC No. 1 Tariff. KMC III will then invoice, and BellSouth will pay, an amount calculated by multiplying the BellSouth billed charges for the circuit by one-half of KMC III's PLCU.

11.6 The Parties agree to compensate each other for Frame Relay network-to-network interface (NNI) ports based upon the NNI rates set forth in BellSouth's FCC No. 1 Tariff. Compensation for each pair of NNI ports will be calculated as follows: BellSouth will invoice, and KMC III will pay, the total nonrecurring and recurring charges for the NNI port. KMC III will then invoice, and BellSouth will pay, an amount calculated by multiplying the BellSouth billed nonrecurring and recurring charges for the NNI port by KMC III's PLCU.

11.7 Each Party agrees that there will be no charges to the other Party for its own subscriber's Permanent Virtual Circuit (PVC) rate elements for the local PVC segment from its Frame Relay switch to its own subscriber's premises. PVC rate elements include the Data Link Connection Identifier (DLCI) and Committed Information Rate (CIR).

11.8 For the PVC segment between the KMC III and BellSouth Frame Relay switches, compensation for the PVC charges is based upon the rates in BellSouth's FCC No. 1 Tariff.

11.9 Compensation for PVC rate elements will be calculated as follows:

11.9.1 If KMC III orders a VC connection between a BellSouth subscriber's PVC segment and a PVC segment from the BellSouth Frame Relay switch to the KMC III Frame Relay switch, BellSouth will invoice, and KMC III will pay, the total nonrecurring and recurring PVC charges for the PVC segment between the BellSouth and KMC III Frame Relay switches. If the VC is a Local VC, KMC III will then invoice and BellSouth will pay, the total nonrecurring and recurring PVC charges billed for that segment. If the VC is not local, no compensation will be paid to KMC III for the PVC segment.

11.9.2 If BellSouth orders a Local VC connection between a KMC III subscriber's PVC segment and a PVC segment from the KMC III Frame Relay switch to the BellSouth Frame Relay switch, BellSouth will invoice, and KMC III will pay, the total nonrecurring and recurring PVC and CIR charges for the PVC segment between the BellSouth and KMC III Frame Relay switches. If the VC is a Local VC, KMC III will then invoice and BellSouth will pay the total nonrecurring and recurring PVC and CIR charges billed for that segment. If the VC is not local, no compensation will be paid to KMC III for the PVC segment.

11.9.3 The Parties agree to compensate each other for requests to change a PVC segment or PVC service order record, according to the Feature Change charge as set forth in the BellSouth access tariff BellSouth FCC No. 1 Tariff.

11.9.4 If KMC III requests a change, BellSouth will invoice and KMC III will pay a Feature Change charge for each affected PVC segment.

11.9.4.1 If BellSouth requests a change to a Local VC, KMC III will invoice and BellSouth will pay a Feature Change charge for each affected PVC segment.

11.9.5 The Parties agree to limit the sum of the CIR for the VCs on a DS1 NNI port to not more than three (3) times the port speed, or not more than six (6) times the port speed on a DS3 NNI port.

11.9.6 Except as expressly provided herein, this Agreement does not address or alter in any way either Party's provision of Exchange Access Frame Relay Service, Managed Shared Frame Relay Service or interLATA Frame Relay Service. All charges by each Party to the other for carriage of Exchange Access Frame Relay Service or interLATA Frame Relay Service are included in the BellSouth access tariff BellSouth FCC No. 1 Tariff.

11.10 KMC III will identify and report quarterly to BellSouth the PLCU of the Frame Relay facilities it uses, per Section 11.5.3 above.

11.11 Either Party may request a review or audit of the various service components, consistent with the provisions of section E2 of the BellSouth intrastate Access Services tariffs or Section 2 of BellSouth's FCC No.1 Tariff.

12. BASIC 911 AND E911 INTERCONNECTION

12.1 Basic 911 and E911 provides a caller access to the applicable emergency service bureau by dialing 911.

12.2 Basic 911 Interconnection. BellSouth will provide to KMC III a list consisting of each municipality that subscribes to 911 service. The list will also provide, if known, the E911 conversion date for each municipality and, for network routing purposes, a ten (10)-digit directory number representing the appropriate emergency answering position for each municipality subscribing to 911. KMC III will be required to arrange to accept 911 calls from its end users in municipalities that subscribe to Basic 911 service and translate the 911 call to the appropriate 10-digit directory number as stated on the list provided by BellSouth. KMC III will be required to route the call to the appropriate PSAP. When a municipality converts to E911 service, KMC III will be required to begin using E911 procedures.

12.3 E911 Interconnection. KMC III shall install a minimum of two (2) dedicated trunks originating from its Serving Wire Center and terminating to the appropriate E911 tandem. The Serving Wire Center must be in the same LATA as the E911 tandem. The dedicated trunks shall be, at a minimum, DS0 level trunks configured as part of a digital (1.544 Megabits (Mbps)) interface (DS1 facility). The configuration shall use CAMA-type signaling with MF pulsing that will deliver ANI with the voice portion of the call. If the user interface is digital, MF pulses as well as other AC signals shall be encoded per the u-255 Law convention. KMC III will be required to provide BellSouth daily updates to the E911 database. KMC III will be required to forward 911 calls to the appropriate E911 tandem along with ANI based upon the current E911 end office to tandem homing arrangement as provided by BellSouth. If the E911 tandem trunks are not available, KMC III will be required to route the call to a designated seven (7)-digit or ten (10)-digit local number residing in the appropriate PSAP. This call will be transported over BellSouth’s interoffice network and will not carry the ANI of the calling party. KMC III shall be responsible for providing BellSouth with complete and accurate data for submission to the 911/E911 database for the purpose of providing 911/E911 to its end users.

12.4 Rates. Recurring and nonrecurring rates associated with trunk groups for 911 service are as set forth in Section 3.3.1above.

12.5 The detailed practices and procedures for 911/E911 interconnection are contained in the E911 Local Exchange Carrier Guide For Facility-Based Providers, found at BellSouth's Interconnection Services Web site: http://www.interconnection.bellsouth.com/guides/e911/html/gcuge001/index.htm.

Exhibit B

Basic Architecture

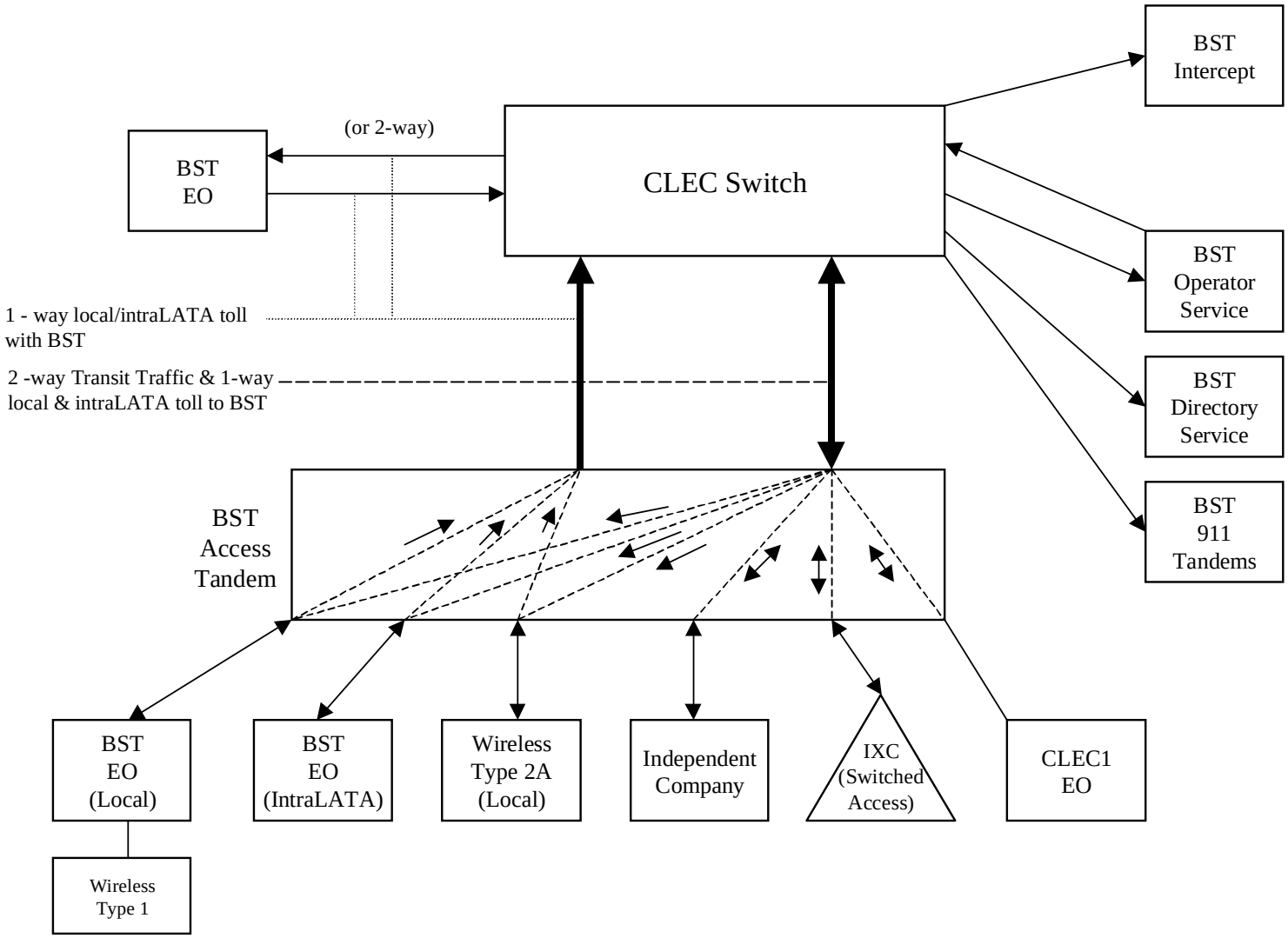

Exhibit C

One-Way Architecture

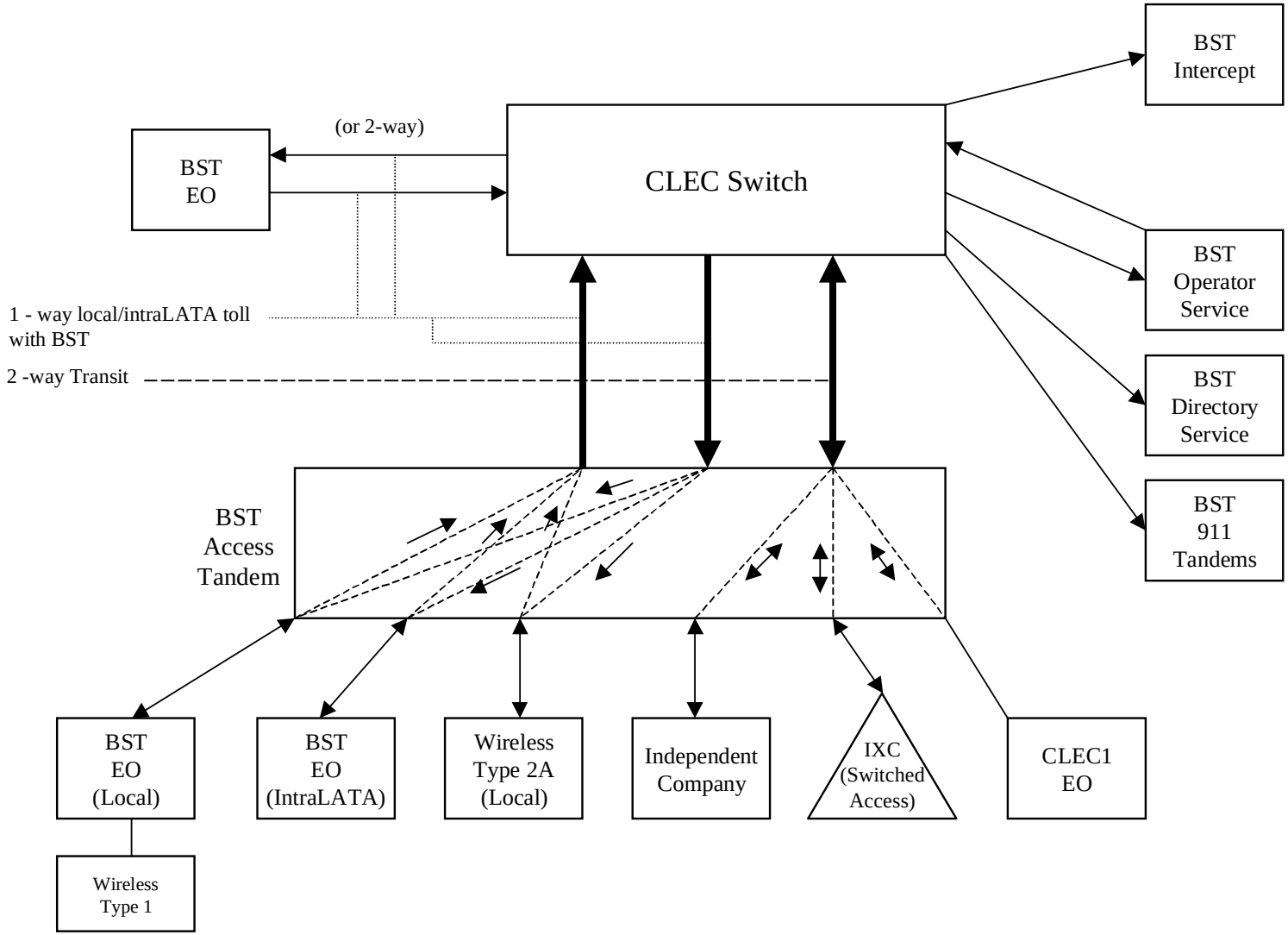

Exhibit D

Two-Way Architecture

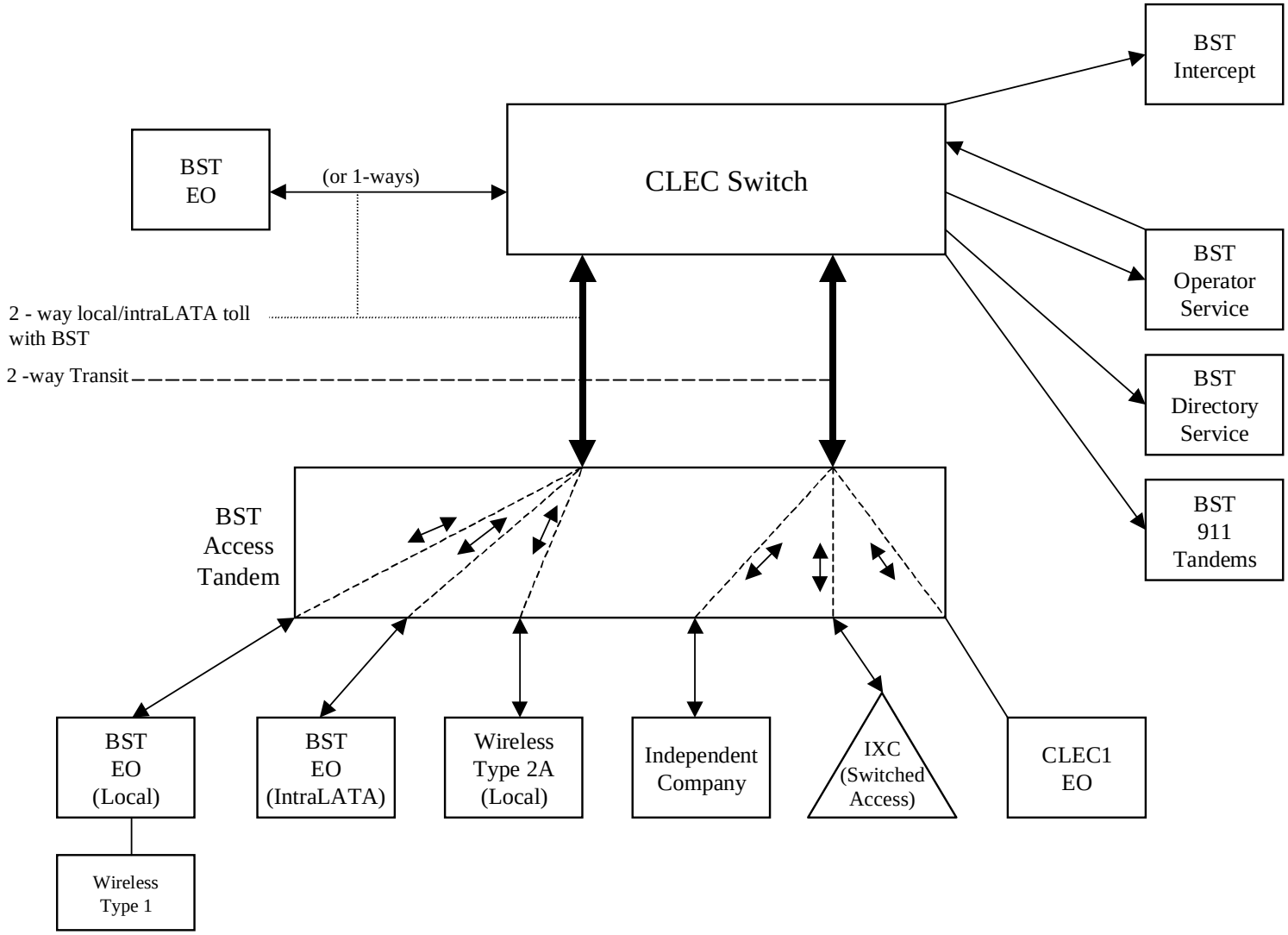

Exhibit E

Supergroup Architecture

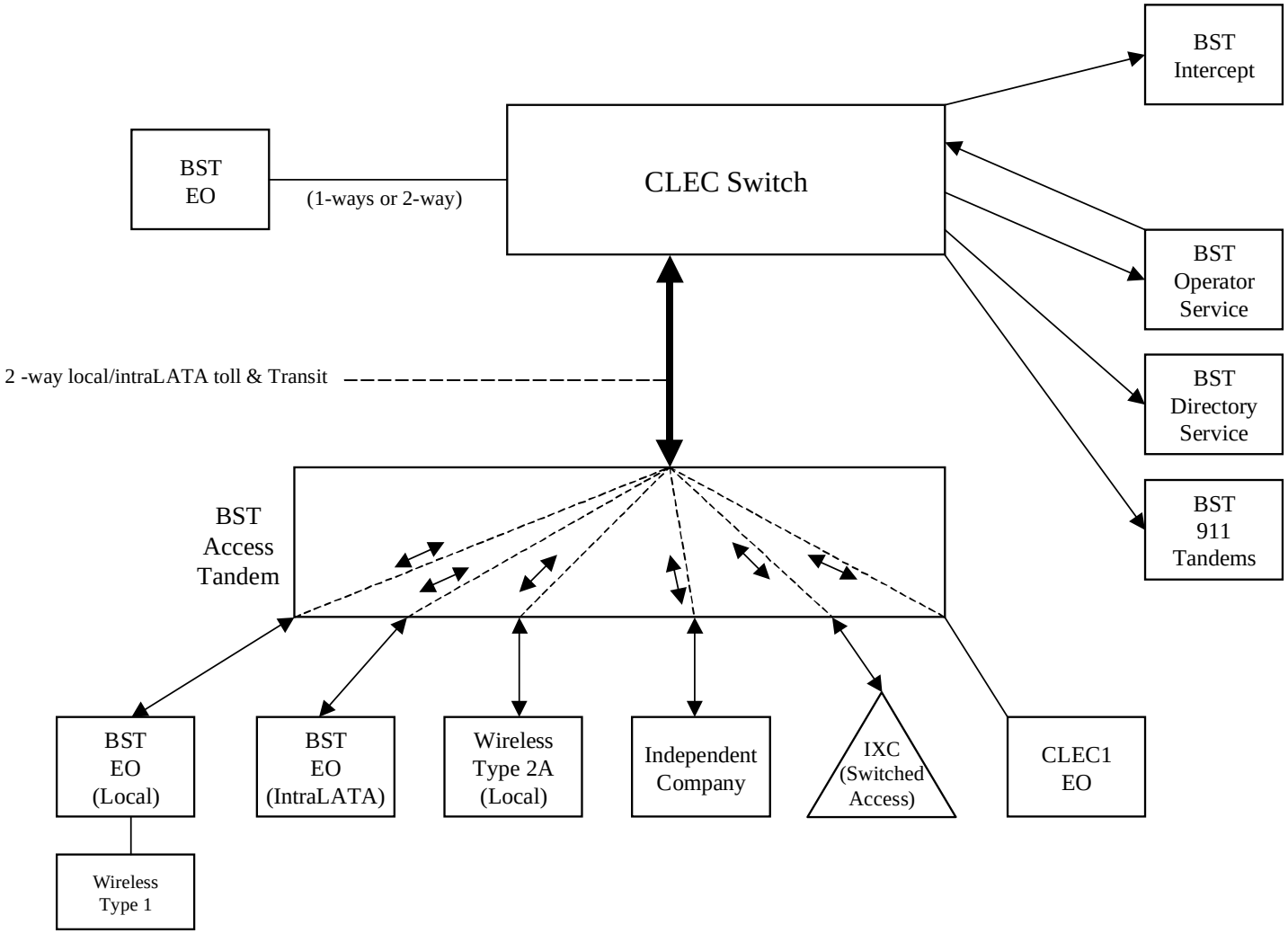

LOCAL INTERCONNECTION - Alabama														Attachment: 3		Exhibit: A	
CATEGORY	RATE ELEMENTS	Interim	Zone	BCS	USOC	RATES($)					Svc Order Submitted Elec per LSR	Svc Order Submitted Manually per LSR	Incremental Charge - Manual Svc Order vs. Electronic-1st	Incremental Charge - Manual Svc Order vs. Electronic-Add'l	Incremental Charge - Manual Svc Order vs. Electronic-Disc 1st	Incremental Charge - Manual Svc Order vs. Electronic-Disc Add'l
						Rec	Nonrecurring		Nonrecurring Disconnect		OSS Rates($)					
							First	Add'l	First	Add'l	SOMEC	SOMAN	SOMAN	SOMAN	SOMAN	SOMAN
LOCAL INTERCONNECTION (CALL TRANSPORT AND TERMINATION)																
NOTE: "bk" beside a rate indicates that the Parties have agreed to bill and keep for that element pursuant to the terms and conditions in Attachment 3.																
TANDEM SWITCHING																
	Tandem Switching Function Per MOU					0.0004980bk										
	Multiple Tandem Switching, per MOU (applies to intial tandem only)					0.000498										
	Tandem Intermediary Charge, per MOU*					0.0025										
*** This charge is applicable only to transit traffic and is applied in addition to applicable switching and/or interconnection charges.**																
TRUNK CHARGE																
	Installation Trunk Side Service - per DS0			OHD	TPP6X		21.56	8.12								
	Installation Trunk Side Service - per DS0			OHD	TPP9X		21.56	8.12								
	Dedicated End Office Trunk Port Service-per DS0**			OHD	TDEOP	0.00										
	Dedicated End Office Trunk Port Service-per DS1**			OH1 OH1MS	TDE1P	0.00										
	Dedicated Tandem Trunk Port Service-per DS0**			OHD	TDWOP	0.00										
	Dedicated Tandem Trunk Port Service-per DS1**			OH1 OH1MS	TDW1P	0.00										
**** This rate element is recovered on a per MOU basis and is included in the End Office Switching and Tandem Switching, per MOU rate elements**																
COMMON TRANSPORT (Shared)																
	Common Transport - Per Mile, Per MOU					0.0000023bk										
	Common Transport - Facilities Termination Per MOU					0.0003224bk										
LOCAL INTERCONNECTION (DEDICATED TRANSPORT)																
INTEROFFICE CHANNEL - DEDICATED TRANSPORT																
	Interoffice Channel - Dedicated Transport - 2-Wire Voice Grade - Per Mile per month			OHM	1L5NF	0.008838										
	Interoffice Channel - Dedicated Transport- 2- Wire Voice Grade - Facility Termination per month			OHM	1L5NF	21.13	40.54	27.41	16.74	6.90						
	Interoffice Channel - Dedicated Transport - 56 kbps - per mile per month			OHM	1L5NK	0.008838										
	Interoffice Channel - Dedicated Transport - 56 kbps - Facility Termination per month			OHM	1L5NK	15.12	40.54	27.41	16.74	6.90						
	Interoffice Channel - Dedicated Transport - 64 kbps - per mile per month			OHM	1L5NK	0.008838										
	Interoffice Channel - Dedicated Transport - 64 kbps - Facility Termination per month			OHM	1L5NK	15.12	40.54	27.41	16.74	6.90						
	Interoffice Channel - Dedicated Channel - DS1 - Per Mile per month			OH1, OH1MS	1L5NL	0.18										
	Interoffice Channel - Dedicated Tranport - DS1 - Facility Termination per month			OH1, OH1MS	1L5NL	60.16	89.27	81.81	16.35	14.44						
	Interoffice Channel - Dedicated Transport - DS3 - Per Mile per month			OH3, OH3MS	1L5NM	4.09										
	Interoffice Channel - Dedicated Transport - DS3 - Facility Termination per month			OH3, OH3MS	1L5NM	703.52	278.75	162.76	60.20	58.46						
LOCAL CHANNEL - DEDICATED TRANSPORT																
	Local Channel - Dedicated - 2-Wire Voice Grade per month			OHM	TEFV2	13.97	193.10	33.17	36.64	3.20						
	Local Channel - Dedicated - 4-Wire Voice Grade per month			OHM	TEFV4	14.93	193.53	33.60	37.11	3.67						
	Local Channel - Dedicated - DS1 per month			OH1	TEFHG	35.76	177.47	153.72	22.19	15.26						
	Local Channel - Dedicated - DS3 Facility Termination per month			OH3	TEFHJ	416.54	451.52	263.94	119.49	83.58						
LOCAL INTERCONNECTION MID-SPAN MEET																
	Local Channel - Dedicated - DS1 per month			OH1MS	TEFHG	0.00	0.00									
	Local Channel - Dedicated - DS3 per month			OH3MS	TEFHJ	0.00	0.00									
MULTIPLEXERS																
	Channelization - DS1 to DS0 Channel System			OH1, OH1MS	SATN1	101.06	91.04	62.57	10.54	9.79						
	DS3 to DS1 Channel System per month			OH3, OH3MS	SATNS	166.13	178.14	93.97	33.26	31.63						
	DS3 Interface Unit (DS1 COCI) per month			OH1, OH1MS	SATCO	12.70	6.58	4.72								
SIGNALING (CCS7)																
	CCS7 Signaling Connection, Per 56Kbps Facility					15.46	35.53	35.53	16.44	16.44						
	CCS7 Signaling Termination, Per STP Port			UDB	PT8SX	130.83										
	CCS7 Signaling Usage, Per TCAP Message					0.0000569										

LOCAL INTERCONNECTION - Alabama														Attachment: 3		Exhibit: A	
CATEGORY		RATE ELEMENTS	Interim	Zone	BCS	USOC	RATES($)					Svc Order Submitted Elec per LSR	Svc Order Submitted Manually per LSR	Incremental Charge - Manual Svc Order vs. Electronic-1st	Incremental Charge - Manual Svc Order vs. Electronic-Add'l	Incremental Charge - Manual Svc Order vs. Electronic-Disc 1st	Incremental Charge - Manual Svc Order vs. Electronic-Disc Add'l
							Rec	Nonrecurring		Nonrecurring Disconnect		OSS Rates($)					
								First	Add'l	First	Add'l	SOMEC	SOMAN	SOMAN	SOMAN	SOMAN	SOMAN
		CCS7 Signaling Connection, Per link (A link)			UDB	TPP6A	15.46	35.53	35.53	16.44	16.44						
		CCS7 Signaling Connection, Per link (B link) (also known as D link)			UDB	TPP6B	15.46	35.53	35.53	16.44	16.44						
		CCS7 Signaling Connection, Switched access service, interface groups, transmissiom paths 6 DS1 level path with bit stream signaling			UDB	TPP6X	15.46	35.53	35.53	16.44	16.44						
		CCS7 Signaling Connection-A link, per month			UDB	TPP9A	15.46	35.53	35.53	16.44	16.44						
		CCS7 Signaling Connection-B link(also known as D link) per month			UDB	TPP9B	15.46	35.53	35.53	16.44	16.44						
		CCS7 Signaling Connection, Switched access service, interface groups, transmissiom paths 9 DS3 level path with bit stream signaling			UDB	TPP9X	15.46	35.53	35.53	16.44	16.44						
		CCS7 Signaling Usage, Per ISUP Message					0.0000142										
		CCS7 Signaling Usage Surrogate, per link per LATA			UDB	STU56	650.33										
		CCS7 Signaling Point Code, per Originating Point Code Establishment or Change, per STP affected			UDB	CCAPO		29.01	29.01	35.57	35.57						
	Notes: If no rate is identified in the contract, the rates, terms, and conditions for the specific service or function will be as set forth in applicable BellSouth tariff.																

LOCAL INTERCONNECTION - Florida														Attachment: 3		Exhibit: A	
CATEGORY	RATE ELEMENTS	Interim	Zone	BCS	USOC	RATES($)					Svc Order Submitted Elec per LSR	Svc Order Submitted Manually per LSR	Incremental Charge - Manual Svc Order vs. Electronic-1st	Incremental Charge - Manual Svc Order vs. Electronic-Add'l	Incremental Charge - Manual Svc Order vs. Electronic-Disc 1st	Incremental Charge - Manual Svc Order vs. Electronic-Disc Add'l
						Rec	Nonrecurring		Nonrecurring Disconnect		OSS Rates($)					
							First	Add'l	First	Add'l	SOMEC	SOMAN	SOMAN	SOMAN	SOMAN	SOMAN
LOCAL INTERCONNECTION (CALL TRANSPORT AND TERMINATION)																
NOTE: "bk" beside a rate indicates that the Parties have agreed to bill and keep for that element pursuant to the terms and conditions in Attachment 3.																
TANDEM SWITCHING																
	Tandem Switching Function Per MOU					0.0006019bk										
	Multiple Tandem Switching, per MOU (applies to intial tandem only)					0.0006019										
	Tandem Intermediary Charge, per MOU*					0.0025										
*** This charge is applicable only to transit traffic and is applied in addition to applicable switching and/or interconnection charges.**																
TRUNK CHARGE																
	Installation Trunk Side Service - per DS0			OHD	TPP6X		21.73	8.19								
	Installation Trunk Side Service - per DS0			OHD	TPP9X		21.73	8.19								
	Dedicated End Office Trunk Port Service-per DS0**			OHD	TDEOP	0.00										
	Dedicated End Office Trunk Port Service-per DS1**			OH1 OH1MS	TDE1P	0.00										
	Dedicated Tandem Trunk Port Service-per DS0**			OHD	TDWOP	0.00										
	Dedicated Tandem Trunk Port Service-per DS1**			OH1 OH1MS	TDW1P	0.00										
**** This rate element is recovered on a per MOU basis and is included in the End Office Switching and Tandem Switching, per MOU rate elements**																
COMMON TRANSPORT (Shared)																
	Common Transport - Per Mile, Per MOU					0.0000035bk										
	Common Transport - Facilities Termination Per MOU					0.0004372bk										
LOCAL INTERCONNECTION (DEDICATED TRANSPORT)																
INTEROFFICE CHANNEL - DEDICATED TRANSPORT																
	Interoffice Channel - Dedicated Transport - 2-Wire Voice Grade - Per Mile per month			OHM	1L5NF	0.0091										
	Interoffice Channel - Dedicated Transport- 2- Wire Voice Grade - Facility Termination per month			OHM	1L5NF	25.32	47.35	31.78	18.31	7.03						
	Interoffice Channel - Dedicated Transport - 56 kbps - per mile per month			OHM	1L5NK	0.0091										
	Interoffice Channel - Dedicated Transport - 56 kbps - Facility Termination per month			OHM	1L5NK	18.44	47.35	31.78	18.31	7.03						
	Interoffice Channel - Dedicated Transport - 64 kbps - per mile per month			OHM	1L5NK	0.0091										
	Interoffice Channel - Dedicated Transport - 64 kbps - Facility Termination per month			OHM	1L5NK	18.44	47.35	31.78	18.31	7.03						
	Interoffice Channel - Dedicated Channel - DS1 - Per Mile per month			OH1, OH1MS	1L5NL	0.1856										
	Interoffice Channel - Dedicated Tranport - DS1 - Facility Termination per month			OH1, OH1MS	1L5NL	88.44	105.54	98.47	21.47	19.05						
	Interoffice Channel - Dedicated Transport - DS3 - Per Mile per month			OH3, OH3MS	1L5NM	3.87										
	Interoffice Channel - Dedicated Transport - DS3 - Facility Termination per month			OH3, OH3MS	1L5NM	1,071.00	335.46	219.28	72.03	70.56						
LOCAL CHANNEL - DEDICATED TRANSPORT																
	Local Channel - Dedicated - 2-Wire Voice Grade per month			OHM	TEFV2	19.66	265.84	46.97	37.63	4.00						
	Local Channel - Dedicated - 4-Wire Voice Grade per month			OHM	TEFV4	20.45	266.54	47.67	44.22	5.33						
	Local Channel - Dedicated - DS1 per month			OH1	TEFHG	36.49	216.65	183.54	24.30	16.95						
	Local Channel - Dedicated - DS3 Facility Termination per month			OH3	TEFHJ	531.91	556.37	343.01	139.13	96.84						
LOCAL INTERCONNECTION MID-SPAN MEET																
	Local Channel - Dedicated - DS1 per month			OH1MS	TEFHG	0.00	0.00									
	Local Channel - Dedicated - DS3 per month			OH3MS	TEFHJ	0.00	0.00									
MULTIPLEXERS																
	Channelization - DS1 to DS0 Channel System			OH1, OH1MS	SATN1	146.77	101.42	71.62	11.09	10.49						
	DS3 to DS1 Channel System per month			OH3, OH3MS	SATNS	211.19	199.28	118.64	40.34	39.07						
	DS3 Interface Unit (DS1 COCI) per month			OH1, OH1MS	SATCO	13.76	10.07	7.08								
SIGNALING (CCS7)																
	CCS7 Signaling Termination, Per STP Port			UDB	PT8SX	135.05										
	CCS7 Signaling Usage, Per TCAP Message					0.0000607										
	CCS7 Signaling Connection, Per link (A link)			UDB	TPP6A	17.93	43.57	43.57	18.31	18.31						

LOCAL INTERCONNECTION - Florida														Attachment: 3		Exhibit: A	
CATEGORY		RATE ELEMENTS	Interim	Zone	BCS	USOC	RATES($)					Svc Order Submitted Elec per LSR	Svc Order Submitted Manually per LSR	Incremental Charge - Manual Svc Order vs. Electronic-1st	Incremental Charge - Manual Svc Order vs. Electronic-Add'l	Incremental Charge - Manual Svc Order vs. Electronic-Disc 1st	Incremental Charge - Manual Svc Order vs. Electronic-Disc Add'l
							Rec	Nonrecurring		Nonrecurring Disconnect		OSS Rates($)					
								First	Add'l	First	Add'l	SOMEC	SOMAN	SOMAN	SOMAN	SOMAN	SOMAN
		CCS7 Signaling Connection, Per link (B link) (also known as D link)			UDB	TPP6B	17.93	43.57	43.57	18.31	18.31						
		CCS7 Signaling Connection, Switched access service, interface groups, transmissiom paths 6 DS1 level path with bit stream signaling			UDB	TPP6X	17.93	43.57	43.57	18.31	18.31						
		CCS7 Signaling Connection-A link, per month			UDB	TPP9A	17.93	43.57	43.57	18.31	18.31						
		CCS7 Signaling Connection-B link(also known as D link) per month			UDB	TPP9B	17.93	43.57	43.57	18.31	18.31						
		CCS7 Signaling Connection, Switched access service, interface groups, transmissiom paths 9 DS3 level path with bit stream signaling			UDB	TPP9X	17.93	43.57	43.57	18.31	18.31						
		CCS7 Signaling Usage, Per ISUP Message					0.0000152										
		CCS7 Signaling Usage Surrogate, per link per LATA			UDB	STU56	694.32										
		CCS7 Signaling Point Code, per Originating Point Code Establishment or Change, per STP affected			UDB	CCAPO		46.03	46.03	46.03	46.03						
	Notes: If no rate is identified in the contract, the rates, terms, and conditions for the specific service or function will be as set forth in applicable BellSouth tariff.																

CATEGORY	RATE ELEMENTS	Interim	Zone	BCS	USOC	RATES($) Rec	Nonrecurring First	Nonrecurring Add'l	Nonrecurring Disconnect First	Nonrecurring Disconnect Add'l	Svc Order Submitted Elec per LSR	Svc Order Submitted Manually per LSR	Incremental Charge - Manual Svc Order vs. Electronic-1st	Incremental Charge - Manual Svc Order vs. Electronic-Add'l	Incremental Charge - Manual Svc Order vs. Electronic-Disc 1st	Incremental Charge - Manual Svc Order vs. Electronic-Disc Add'l
											OSS Rates($)					
											SOMEC	SOMAN	SOMAN	SOMAN	SOMAN	SOMAN
LOCAL INTERCONNECTION (CALL TRANSPORT AND TERMINATION)																
	NOTE: "bk" beside a rate indicates that the Parties have agreed to bill and keep for that element pursuant to the terms and conditions in Attachment 3.															
	TANDEM SWITCHING															
	Tandem Switching Function Per MOU					0.0004086bk										
	Multiple Tandem Switching, per MOU (applies to intial tandem only)					0.0004086										
	Tandem Intermediary Charge, per MOU*					0.0025										
	*** This charge is applicable only to transit traffic and is applied in addition to applicable switching and/or interconnection charges.**															
	TRUNK CHARGE															
	Installation Trunk Side Service - per DS0			OHD	TPP6X		21.53	8.11								
	Installation Trunk Side Service - per DS0			OHD	TPP9X		21.53	8.11								
	Dedicated End Office Trunk Port Service-per DS0**			OHD	TDEOP	0.00										
	Dedicated End Office Trunk Port Service-per DS1**			OH1 OH1MS	TDE1P	0.00										
	Dedicated Tandem Trunk Port Service-per DS0**			OHD	TDWOP	0.00										
	Dedicated Tandem Trunk Port Service-per DS1**			OH1 OH1MS	TDW1P	0.00										
	**** This rate element is recovered on a per MOU basis and is included in the End Office Switching and Tandem Switching, per MOU rate elements**															
	COMMON TRANSPORT (Shared)															
	Common Transport - Per Mile, Per MOU					0.0000027bk										
	Common Transport - Facilities Termination Per MOU					0.0001914bk										
LOCAL INTERCONNECTION (DEDICATED TRANSPORT)																
	INTEROFFICE CHANNEL - DEDICATED TRANSPORT															
	Interoffice Channel - Dedicated Transport - 2-Wire Voice Grade - Per Mile per month			OHM	1L5NF	0.0057										
	Interoffice Channel - Dedicated Transport- 2- Wire Voice Grade - Facility Termination per month			OHM	1L5NF	12.87	48.455	19.48	16.575	4.995						
	Interoffice Channel - Dedicated Transport - 56 kbps - per mile per month			OHM	1L5NK	0.0057										
	Interoffice Channel - Dedicated Transport - 56 kbps - Facility Termination per month			OHM	1L5NK	7.83	48.455	19.48	16.575	4.995						
	Interoffice Channel - Dedicated Transport - 64 kbps - per mile per month			OHM	1L5NK	0.0057										
	Interoffice Channel - Dedicated Transport - 64 kbps - Facility Termination per month			OHM	1L5NK	7.83	48.455	19.48	16.575	4.995						
	Interoffice Channel - Dedicated Channel - DS1 - Per Mile per month			OH1, OH1MS	1L5NL	0.1154										
	Interoffice Channel - Dedicated Tranport - DS1 - Facility Termination per month			OH1, OH1MS	1L5NL	34.19	111.025	80.28	31.355	21.73						
	Interoffice Channel - Dedicated Transport - DS3 - Per Mile per month			OH3, OH3MS	1L5NM	2.53										
	Interoffice Channel - Dedicated Transport - DS3 - Facility Termination per month			OH3, OH3MS	1L5NM	342.02	320.47	86.32	66.77	52.81						
	LOCAL CHANNEL - DEDICATED TRANSPORT															
	Local Channel - Dedicated - 2-Wire Voice Grade per month			OHM	TEFV2	7.74	121.065	53.295	46.395	13.365						
	Local Channel - Dedicated - 4-Wire Voice Grade per month			OHM	TEFV4	8.72	125.62	54.43	46.395	13.365						
	Local Channel - Dedicated - DS1 per month			OH1	TEFHG	18.47	149.46	111.195	40.355	26.115						
	Local Channel - Dedicated - DS3 Facility Termination per month			OH3	TEFHJ	147.01	445.01	145.18	112.905	75.88						
	LOCAL INTERCONNECTION MID-SPAN MEET															
	Local Channel - Dedicated - DS1 per month			OH1MS	TEFHG	0.00	0.00									
	Local Channel - Dedicated - DS3 per month			OH3MS	TEFHJ	0.00	0.00									
	MULTIPLEXERS															
	Channelization - DS1 to DS0 Channel System			OH1, OH1MS	SATN1	69.75	105.675	41.585	23.75	4.19						
	DS3 to DS1 Channel System per month			OH3, OH3MS	SATNS	121.90	224.475	71.83	40.005	31.065						
	DS3 Interface Unit (DS1 COCI) per month			OH1, OH1MS	SATCO	7.35	15.805	11.385	6.605	6.605						
SIGNALING (CCS7)																
	CCS7 Signaling Termination, Per STP Port			UDB	PT8SX	108.80										
	CCS7 Signaling Usage, Per TCAP Message					0.0000527										
	CCS7 Signaling Connection, Per link (A link) (same as E.3.1)			UDB	TPP6A	8.73	34.77	34.77	16.91	16.91						

LOCAL INTERCONNECTION - Georgia														Attachment: 3		Exhibit: A	
CATEGORY		RATE ELEMENTS	Interim	Zone	BCS	USOC	RATES($)					Svc Order Submitted Elec per LSR	Svc Order Submitted Manually per LSR	Incremental Charge - Manual Svc Order vs. Electronic-1st	Incremental Charge - Manual Svc Order vs. Electronic-Add'l	Incremental Charge - Manual Svc Order vs. Electronic-Disc 1st	Incremental Charge - Manual Svc Order vs. Electronic-Disc Add'l
							Rec	Nonrecurring		Nonrecurring Disconnect		OSS Rates($)					
								First	Add'l	First	Add'l	SOMEC	SOMAN	SOMAN	SOMAN	SOMAN	SOMAN
		CCS7 Signaling Connection, Per link (B link) (also known as D link) (same as E.3.1)			UDB	TPP6B	8.73	34.77	34.77	16.91	16.91						
		CCS7 Signaling Connection, Switched access service, interface groups, transmissiom paths 6 DS1 level path with bit stream signaling			UDB	TPP6X	8.73	34.77	34.77	16.91	16.91						
		CCS7 Signaling Connection, Per link (A link) (same as E.3.1)			UDB	TPP9A	8.73	34.77	34.77	16.91	16.91						
		CCS7 Signaling Connection-B link(also known as D link) per month (same as E.3.1)			UDB	TPP9B	8.73	34.77	34.77	16.91	16.91						
		CCS7 Signaling Connection, Switched access service, interface groups, transmissiom paths 9 DS3 level path with bit stream signaling			UDB	TPP9X	8.73	34.77	34.77	16.91	16.91						
		CCS7 Signaling Usage, Per ISUP Message (same as E.3.3)					0.0000132										
		CCS7 Signaling Usage Surrogate, per link			UDB	STU56	907.44										
		CCS7 Signaling Point Code, Establishment or Change, per STP affected			UDB	CCAPO		28.15	28.15	33.32	33.32						
	Notes: If no rate is identified in the contract, the rates, terms, and conditions for the specific service or function will be as set forth in applicable BellSouth tariff.																

LOCAL INTERCONNECTION - Kentucky														Attachment: 3		Exhibit: A	
CATEGORY	RATE ELEMENTS	Interim	Zone	BCS	USOC	RATES($)					Svc Order Submitted Elec per LSR	Svc Order Submitted Manually per LSR	Incremental Charge - Manual Svc Order vs. Electronic-1st	Incremental Charge - Manual Svc Order vs. Electronic-Add'l	Incremental Charge - Manual Svc Order vs. Electronic-Disc 1st	Incremental Charge - Manual Svc Order vs. Electronic-Disc Add'l
						Rec	Nonrecurring		Nonrecurring Disconnect		OSS Rates($)					
							First	Add'l	First	Add'l	SOMEC	SOMAN	SOMAN	SOMAN	SOMAN	SOMAN
LOCAL INTERCONNECTION (CALL TRANSPORT AND TERMINATION)																
NOTE: "bk" beside a rate indicates that the Parties have agreed to bill and keep for that element pursuant to the terms and conditions in Attachment 3.																
TANDEM SWITCHING																
	Tandem Switching Function Per MOU					0.0006772bk										
	Multiple Tandem Switching, per MOU (applies to intial tandem only)					0.0006772										
	Tandem Intermediary Charge, per MOU*					0.0025										
*** This charge is applicable only to transit traffic and is applied in addition to applicable switching and/or interconnection charges.**																
TRUNK CHARGE																
	Installation Trunk Side Service - per DS0			OHD	TPP6X		21.58	8.13								
	Installation Trunk Side Service - per DS0			OHD	TPP9X		21.58	8.13								
	Dedicated End Office Trunk Port Service-per DS0**			OHD	TDEOP	0.00										
	Dedicated End Office Trunk Port Service-per DS1**			OH1 OH1MS	TDE1P	0.00										
	Dedicated Tandem Trunk Port Service-per DS0**			OHD	TDWOP	0.00										
	Dedicated Tandem Trunk Port Service-per DS1**			OH1 OH1MS	TDW1P	0.00										
**** This rate element is recovered on a per MOU basis and is included in the End Office Switching and Tandem Switching, per MOU rate elements**																
COMMON TRANSPORT (Shared)																
	Common Transport - Per Mile, Per MOU					0.0000030bk										
	Common Transport - Facilities Termination Per MOU					0.0007466bk										
LOCAL INTERCONNECTION (DEDICATED TRANSPORT)																
INTEROFFICE CHANNEL - DEDICATED TRANSPORT																
	Interoffice Channel - Dedicated Transport - 2-Wire Voice Grade - Per Mile per month			OHM	1L5NF	0.01										
	Interoffice Channel - Dedicated Transport- 2- Wire Voice Grade - Facility Termination per month			OHM	1L5NF	29.11	47.34	31.78	22.77	8.75						
	Interoffice Channel - Dedicated Transport - 56 kbps - per mile per month			OHM	1L5NK	0.0115										
	Interoffice Channel - Dedicated Transport - 56 kbps - Facility Termination per month			OHM	1L5NK	20.97	47.35	31.78	22.77	8.75						
	Interoffice Channel - Dedicated Transport - 64 kbps - per mile per month			OHM	1L5NK	0.0115										
	Interoffice Channel - Dedicated Transport - 64 kbps - Facility Termination per month			OHM	1L5NK	20.97	47.35	31.78	22.77	8.75						
	Interoffice Channel - Dedicated Channel - DS1 - Per Mile per month			OH1, OH1MS	1L5NL	0.23										
	Interoffice Channel - Dedicated Tranport - DS1 - Facility Termination per month			OH1, OH1MS	1L5NL	96.04	105.52	98.46	23.09	20.49						
	Interoffice Channel - Dedicated Transport - DS3 - Per Mile per month			OH3, OH3MS	1L5NM	4.97										
	Interoffice Channel - Dedicated Transport - DS3 - Facility Termination per month			OH3, OH3MS	1L5NM	1,175.15	335.40	219.24	89.57	87.75						
LOCAL CHANNEL - DEDICATED TRANSPORT																
	Local Channel - Dedicated - 2-Wire Voice Grade per month			OHM	TEFV2	18.57	265.78	46.96	46.79	4.98						
	Local Channel - Dedicated - 4-Wire Voice Grade per month			OHM	TEFV4	19.86	266.48	47.65	47.54	5.73						
	Local Channel - Dedicated - DS1 per month			OH1	TEFHG	40.46	209.60	176.51	30.21	21.07						
	Local Channel - Dedicated - DS3 Facility Termination per month			OH3	TEFHJ	576.05	551.38	338.08	173.00	120.42						
LOCAL INTERCONNECTION MID-SPAN MEET																
	Local Channel - Dedicated - DS1 per month			OH1MS	TEFHG	0.00	0.00									
	Local Channel - Dedicated - DS3 per month			OH3MS	TEFHJ	0.00	0.00									
MULTIPLEXERS																
	Channelization - DS1 to DS0 Channel System			OH1, OH1MS	SATN1	113.33	101.40	71.60	13.79	13.04						
	DS3 to DS1 Channel System per month			OH3, OH3MS	SATNS	158.20	199.23	118.62	50.16	48.59						
	DS3 Interface Unit (DS1 COCI) per month			OH1, OH1MS	SATCO	11.80	10.07	7.08								
SIGNALING (CCS7)																
	CCS7 Signaling Termination, Per STP Port			UDB	PT8SX	151.39										
	CCS7 Signaling Usage, Per TCAP Message					0.0000656										
	CCS7 Signaling Connection, Per link (A link)			UDB	TPP6A	20.71	43.56	43.56	22.45	22.45						

LOCAL INTERCONNECTION - Kentucky														Attachment: 3		Exhibit: A	
CATEGORY		RATE ELEMENTS	Interim	Zone	BCS	USOC	RATES($)					Svc Order Submitted Elec per LSR	Svc Order Submitted Manually per LSR	Incremental Charge - Manual Svc Order vs. Electronic-1st	Incremental Charge - Manual Svc Order vs. Electronic-Add'l	Incremental Charge - Manual Svc Order vs. Electronic-Disc 1st	Incremental Charge - Manual Svc Order vs. Electronic-Disc Add'l
							Rec	Nonrecurring		Nonrecurring Disconnect		OSS Rates($)					
								First	Add'l	First	Add'l	SOMEC	SOMAN	SOMAN	SOMAN	SOMAN	SOMAN
		CCS7 Signaling Connection, Per link (B link) (also known as D link)			UDB	TPP6B	20.71	43.56	43.56	22.45	22.45						
		CCS7 Signaling Connection, Switched access service, interface groups, transmissiom paths 6 DS1 level path with bit stream signaling			UDB	TPP6X	20.71	43.56	43.56	22.45	22.45						
		CCS7 Signaling Connection-A link, per month			UDB	TPP9A	20.71	43.56	43.56	22.45	22.45						
		CCS7 Signaling Connection-B link(also known as D link) per month			UDB	TPP9B	20.71	43.56	43.56	22.45	22.45						
		CCS7 Signaling Connection, Switched access service, interface groups, transmissiom paths 9 DS3 level path with bit stream signaling			UDB	TPP9X	20.71	43.56	43.56	22.45	22.45						
		CCS7 Signaling Usage, Per ISUP Message					0.0000164										
		CCS7 Signaling Usage Surrogate, per link per LATA			UDB	STU56	751.08										
		CCS7 Signaling Point Code, per Originating Point Code Establishment or Change, per STP affected			UDB	CCAPO		46.02	46.02	56.43	56.43						
		CCS7 Signaling Point Code, per Destination Point Code Establishment or Change, Per Stp Affected			UDB	CCAPD		46.02	46.02	56.43	56.43						
	Notes: If no rate is identified in the contract, the rates, terms, and conditions for the specific service or function will be as set forth in applicable BellSouth tariff.																

LOCAL INTERCONNECTION - Louisiana														Attachment: 3		Exhibit: A	
CATEGORY	RATE ELEMENTS	Interim	Zone	BCS	USOC	RATES($)					Svc Order Submitted Elec per LSR	Svc Order Submitted Manually per LSR	Incremental Charge - Manual Svc Order vs. Electronic-1st	Incremental Charge - Manual Svc Order vs. Electronic-Add'l	Incremental Charge - Manual Svc Order vs. Electronic-Disc 1st	Incremental Charge - Manual Svc Order vs. Electronic-Disc Add'l
						Rec	Nonrecurring		Nonrecurring Disconnect		OSS Rates($)					
							First	Add'l	First	Add'l	SOMEC	SOMAN	SOMAN	SOMAN	SOMAN	SOMAN
LOCAL INTERCONNECTION (CALL TRANSPORT AND TERMINATION)																
NOTE: "bk" beside a rate indicates that the Parties have agreed to bill and keep for that element pursuant to the terms and conditions in Attachment 3.																
TANDEM SWITCHING																
	Tandem Switching Function Per MOU					0.0005507bk										
	Multiple Tandem Switching, per MOU (applies to intial tandem only)					0.0005507										
	Tandem Intermediary Charge, per MOU*					0.0025										
*** This charge is applicable only to transit traffic and is applied in addition to applicable switching and/or interconnection charges.**																
TRUNK CHARGE																
	Installation Trunk Side Service - per DS0			OHD	TPP6X		21.64	8.15								
	Installation Trunk Side Service - per DS0			OHD	TPP9X		21.64	8.15								
	Dedicated End Office Trunk Port Service-per DS0**			OHD	TDEOP	0.00										
	Dedicated End Office Trunk Port Service-per DS1**			OH1 OH1MS	TDE1P	0.00										
	Dedicated Tandem Trunk Port Service-per DS0**			OHD	TDWOP	0.00										
	Dedicated Tandem Trunk Port Service-per DS1**			OH1 OH1MS	TDW1P	0.00										
**** This rate element is recovered on a per MOU basis and is included in the End Office Switching and Tandem Switching, per MOU rate elements**																
COMMON TRANSPORT (Shared)																
	Common Transport - Per Mile, Per MOU					0.0000032bk										
	Common Transport - Facilities Termination Per MOU					0.0003748bk										
LOCAL INTERCONNECTION (DEDICATED TRANSPORT)																
INTEROFFICE CHANNEL - DEDICATED TRANSPORT																
	Interoffice Channel - Dedicated Transport - 2-Wire Voice Grade - Per Mile per month			OHM	1L5NF	0.013										
	Interoffice Channel - Dedicated Transport- 2- Wire Voice Grade - Facility Termination per month			OHM	1L5NF	22.60	39.36	26.62								
	Interoffice Channel - Dedicated Transport - 56 kbps - per mile per month			OHM	1L5NK	0.013										
	Interoffice Channel - Dedicated Transport - 56 kbps - Facility Termination per month			OHM	1L5NK	15.61	39.37	26.62								
	Interoffice Channel - Dedicated Transport - 64 kbps - per mile per month			OHM	1L5NK	0.013										
	Interoffice Channel - Dedicated Transport - 64 kbps - Facility Termination per month			OHM	1L5NK	15.61	39.37	26.62								
	Interoffice Channel - Dedicated Channel - DS1 - Per Mile per month			OH1, OH1MS	1L5NL	0.2652										
	Interoffice Channel - Dedicated Tranport - DS1 - Facility Termination per month			OH1, OH1MS	1L5NL	70.47	86.69	79.44								
	Interoffice Channel - Dedicated Transport - DS3 - Per Mile per month			OH3, OH3MS	1L5NM	6.04										
	Interoffice Channel - Dedicated Transport - DS3 - Facility Termination per month			OH3, OH3MS	1L5NM	850.45	270.69	158.05								
LOCAL CHANNEL - DEDICATED TRANSPORT																
	Local Channel - Dedicated - 2-Wire Voice Grade per month			OHM	TEFV2	18.32	187.51	32.21								
	Local Channel - Dedicated - 4-Wire Voice Grade per month			OHM	TEFV4	19.41	187.94	32.63								
	Local Channel - Dedicated - DS1 per month			OH1	TEFHG	39.18	172.34	149.27								
	Local Channel - Dedicated - DS3 Facility Termination per month			OH3	TEFHJ	469.44	438.46	256.30								
LOCAL INTERCONNECTION MID-SPAN MEET																
	Local Channel - Dedicated - DS1 per month			OH1MS	TEFHG	0.00	0.00									
	Local Channel - Dedicated - DS3 per month			OH3MS	TEFHJ	0.00	0.00									
MULTIPLEXERS																
	Channelization - DS1 to DS0 Channel System			OH1, OH1MS	SATN1	105.09	88.41	60.76								
	DS3 to DS1 Channel System per month			OH3, OH3MS	SATNS	201.48	172.99	91.25								
	DS3 Interface Unit (DS1 COCI) per month			OH1, OH1MS	SATCO	11.78	6.39	4.58								
SIGNALING (CCS7)																
	CCS7 Signaling Termination, Per STP Port			UDB	PT8SX	147.60										
	CCS7 Signaling Usage, Per TCAP Message					0.000064										
	CCS7 Signaling Connection, Per link (A link)			UDB	TPP6A	15.77	34.50	34.50								

LOCAL INTERCONNECTION - Louisiana														Attachment: 3		Exhibit: A	
CATEGORY		RATE ELEMENTS	Interim	Zone	BCS	USOC	RATES($)					Svc Order Submitted Elec per LSR	Svc Order Submitted Manually per LSR	Incremental Charge - Manual Svc Order vs. Electronic-1st	Incremental Charge - Manual Svc Order vs. Electronic-Add'l	Incremental Charge - Manual Svc Order vs. Electronic-Disc 1st	Incremental Charge - Manual Svc Order vs. Electronic-Disc Add'l
							Rec	Nonrecurring		Nonrecurring Disconnect		OSS Rates($)					
								First	Add'l	First	Add'l	SOMEC	SOMAN	SOMAN	SOMAN	SOMAN	SOMAN
		CCS7 Signaling Connection, Per link (B link) (also known as D link)			UDB	TPP6B	15.77	34.50	34.50								
		CCS7 Signaling Connection, Switched access service, interface groups, transmissiom paths 6 DS1 level path with bit stream signaling			UDB	TPP6X	15.77	34.50	34.50								
		CCS7 Signaling Connection-A link, per month			UDB	TPP9A	15.77	34.50	34.50								
		CCS7 Signaling Connection-B link(also known as D link) per month			UDB	TPP9B	15.77	34.50	34.50								
		CCS7 Signaling Connection, Switched access service, interface groups, transmissiom paths 9 DS3 level path with bit stream signaling			UDB	TPP9X	15.77	34.50	34.50								
		CCS7 Signaling Usage, Per ISUP Message					0.000016										
		CCS7 Signaling Usage Surrogate, per link per LATA			UDB	STU56	732.10										
		CCS7 Signaling Point Code, per Originating Point Code Establishment or Change, per STP affected			UDB	CCAPO		28.17	28.17								
		CCS7 Signaling Point Code, per Destination Point Code Establishment or Change, Per Stp Affected			UDB	CCAPD		28.17	28.17								
	Notes: If no rate is identified in the contract, the rates, terms, and conditions for the specific service or function will be as set forth in applicable BellSouth tariff.																

LOCAL INTERCONNECTION - Mississippi														Attachment: 3		Exhibit: A	
CATEGORY	RATE ELEMENTS	Interim	Zone	BCS	USOC	RATES($)					Svc Order Submitted Elec per LSR	Svc Order Submitted Manually per LSR	Incremental Charge - Manual Svc Order vs. Electronic-1st	Incremental Charge - Manual Svc Order vs. Electronic-Add'l	Incremental Charge - Manual Svc Order vs. Electronic-Disc 1st	Incremental Charge - Manual Svc Order vs. Electronic-Disc Add'l
						Rec	Nonrecurring		Nonrecurring Disconnect		OSS Rates($)					
							First	Add'l	First	Add'l	SOMEC	SOMAN	SOMAN	SOMAN	SOMAN	SOMAN
LOCAL INTERCONNECTION (CALL TRANSPORT AND TERMINATION)																
NOTE: "bk" beside a rate indicates that the Parties have agreed to bill and keep for that element pursuant to the terms and conditions in Attachment 3.																
TANDEM SWITCHING																
	Tandem Switching Function Per MOU					0.0005379bk										
	Multiple Tandem Switching, per MOU (applies to intial tandem only)					0.0005379										
	Tandem Intermediary Charge, per MOU*					0.0025										
*** This charge is applicable only to transit traffic and is applied in addition to applicable switching and/or interconnection charges.**																
TRUNK CHARGE																
	Installation Trunk Side Service - per DS0			OHD	TPP6X		21.58	8.13								
	Installation Trunk Side Service - per DS0			OHD	TPP9X		21.58	8.13								
	Dedicated End Office Trunk Port Service-per DS0**			OHD	TDEOP	0.00										
	Dedicated End Office Trunk Port Service-per DS1**			OH1 OH1MS	TDE1P	0.00										
	Dedicated Tandem Trunk Port Service-per DS0**			OHD	TDWOP	0.00										
	Dedicated Tandem Trunk Port Service-per DS1**			OH1 OH1MS	TDW1P	0.00										
**** This rate element is recovered on a per MOU basis and is included in the End Office Switching and Tandem Switching, per MOU rate elements**																
COMMON TRANSPORT (Shared)																
	Common Transport - Per Mile, Per MOU					0.0000026bk										
	Common Transport - Facilities Termination Per MOU					0.0004541bk										
LOCAL INTERCONNECTION (DEDICATED TRANSPORT)																
INTEROFFICE CHANNEL - DEDICATED TRANSPORT																
	Interoffice Channel - Dedicated Transport - 2-Wire Voice Grade - Per Mile per month			OHM	1L5NF	0.0098										
	Interoffice Channel - Dedicated Transport- 2- Wire Voice Grade - Facility Termination per month			OHM	1L5NF	22.52	40.77	27.57	17.26	7.11						
	Interoffice Channel - Dedicated Transport - 56 kbps - per mile per month			OHM	1L5NK	0.0098										
	Interoffice Channel - Dedicated Transport - 56 kbps - Facility Termination per month			OHM	1L5NK	15.68	40.78	27.57	17.26	7.11						
	Interoffice Channel - Dedicated Transport - 64 kbps - per mile per month			OHM	1L5NK	0.0098										
	Interoffice Channel - Dedicated Transport - 64 kbps - Facility Termination per month			OHM	1L5NK	15.68	40.78	27.57	17.26	7.11						
	Interoffice Channel - Dedicated Channel - DS1 - Per Mile per month			OH1, OH1MS	1L5NL	0.201										
	Interoffice Channel - Dedicated Tranport - DS1 - Facility Termination per month			OH1, OH1MS	1L5NL	57.33	89.79	82.28	16.86	14.90						
	Interoffice Channel - Dedicated Transport - DS3 - Per Mile per month			OH3, OH3MS	1L5NM	4.76										
	Interoffice Channel - Dedicated Transport - DS3 - Facility Termination per month			OH3, OH3MS	1L5NM	641.90	280.37	163.70	62.08	60.29						
LOCAL CHANNEL - DEDICATED TRANSPORT																
	Local Channel - Dedicated - 2-Wire Voice Grade per month			OHM	TEFV2	14.91	194.22	33.36	37.79	3.30						
	Local Channel - Dedicated - 4-Wire Voice Grade per month			OHM	TEFV4	15.99	194.66	33.80	38.27	3.78						
	Local Channel - Dedicated - DS1 per month			OH1	TEFHG	36.83	178.50	154.61	22.89	15.74						
	Local Channel - Dedicated - DS3 Facility Termination per month			OH3	TEFHJ	413.87	454.13	264.47	123.23	86.19						
LOCAL INTERCONNECTION MID-SPAN MEET																
	Local Channel - Dedicated - DS1 per month			OH1MS	TEFHG	0.00	0.00									
	Local Channel - Dedicated - DS3 per month			OH3MS	TEFHJ	0.00	0.00									
MULTIPLEXERS																
	Channelization - DS1 to DS0 Channel System			OH1, OH1MS	SATN1	102.85	91.57	62.94	10.87	10.10						
	DS3 to DS1 Channel System per month			OH3, OH3MS	SATNS	170.63	179.17	94.52	34.30	32.82						
	DS3 Interface Unit (DS1 COCI) per month			OH1, OH1MS	SATCO	12.96	6.62	4.74								
SIGNALING (CCS7)																
	CCS7 Signaling Termination, Per STP Port			UDB	PT8SX	132.21										
	CCS7 Signaling Usage, Per TCAP Message					0.0000597										
	CCS7 Signaling Connection, Per link (A link)			UDB	TPP6A	16.55	35.74	35.74	16.53	16.53						

LOCAL INTERCONNECTION - Mississippi														Attachment: 3		Exhibit: A	
CATEGORY		RATE ELEMENTS	Interim	Zone	BCS	USOC	RATES($)					Svc Order Submitted Elec per LSR	Svc Order Submitted Manually per LSR	Incremental Charge - Manual Svc Order vs. Electronic-1st	Incremental Charge - Manual Svc Order vs. Electronic-Add'l	Incremental Charge - Manual Svc Order vs. Electronic-Disc 1st	Incremental Charge - Manual Svc Order vs. Electronic-Disc Add'l
							Rec	Nonrecurring		Nonrecurring Disconnect		OSS Rates($)					
								First	Add'l	First	Add'l	SOMEC	SOMAN	SOMAN	SOMAN	SOMAN	SOMAN
		CCS7 Signaling Connection, Per link (B link) (also known as D link)			UDB	TPP6B	16.55	35.74	35.74	16.53	16.53						
		CCS7 Signaling Connection, Switched access service, interface groups, transmissiom paths 6 DS1 level path with bit stream signaling			UDB	TPP6X	16.55	35.74	35.74	16.53	16.53						
		CCS7 Signaling Connection-A link, per month			UDB	TPP9A	16.55	35.74	35.74	16.53	16.53						
		CCS7 Signaling Connection-B link(also known as D link) per month			UDB	TPP9B	16.55	35.74	35.74	16.53	16.53						
		CCS7 Signaling Connection, Switched access service, interface groups, transmissiom paths 9 DS3 level path with bit stream signaling			UDB	TPP9X	16.55	35.74	35.74	16.53	16.53						
		CCS7 Signaling Usage, Per ISUP Message					0.0000149										
		CCS7 Signaling Usage Surrogate, per link per LATA			UDB	STU56	683.55										
		CCS7 Signaling Point Code, per Originating Point Code Establishment or Change, per STP affected			UDB	CCAPO		29.18	29.18	35.78	35.78						
	Notes: If no rate is identified in the contract, the rates, terms, and conditions for the specific service or function will be as set forth in applicable BellSouth tariff.																

LOCAL INTERCONNECTION - North Carolina														Attachment: 3		Exhibit: A	
CATEGORY		RATE ELEMENTS	Interim	Zone	BCS	USOC	RATES($)					Svc Order Submitted Elec per LSR	Svc Order Submitted Manually per LSR	Incremental Charge - Manual Svc Order vs. Electronic-1st	Incremental Charge - Manual Svc Order vs. Electronic-Add'l	Incremental Charge - Manual Svc Order vs. Electronic-Disc 1st	Incremental Charge - Manual Svc Order vs. Electronic-Disc Add'l
							Rec	Nonrecurring		Nonrecurring Disconnect		OSS Rates($)					
								First	Add'l	First	Add'l	SOMEC	SOMAN	SOMAN	SOMAN	SOMAN	SOMAN
LOCAL INTERCONNECTION (CALL TRANSPORT AND TERMINATION)																	
	NOTE: "bk" beside a rate indicates that the Parties have agreed to bill and keep for that element pursuant to the terms and conditions in Attachment 3.																
	TANDEM SWITCHING																
		Tandem Switching Function Per MOU					0.0012000bk										
		Multiple Tandem Switching, per MOU (applies to intial tandem only)					0.0012										
		Tandem Intermediary Charge, per MOU*					0.0025										
	*** This charge is applicable only to transit traffic and is applied in addition to applicable switching and/or interconnection charges.**																
	TRUNK CHARGE																
		Installation Trunk Side Service - per DS0			OHD	TPP6X		21.55	8.12								
		Installation Trunk Side Service - per DS0			OHD	TPP9X		21.55	8.12								
		Dedicated End Office Trunk Port Service-per DS0**			OHD	TDEOP	0.00										
		Dedicated End Office Trunk Port Service-per DS1**			OH1 OH1MS	TDE1P	0.00										
		Dedicated Tandem Trunk Port Service-per DS0**			OHD	TDWOP	0.00										
		Dedicated Tandem Trunk Port Service-per DS1**			OH1 OH1MS	TDW1P	0.00										
	**** This rate element is recovered on a per MOU basis and is included in the End Office Switching and Tandem Switching, per MOU rate elements**																
	COMMON TRANSPORT (Shared)																
		Common Transport - Per Mile, Per MOU					0.0000100bk										
		Common Transport - Facilities Termination Per MOU					0.0003400bk										
LOCAL INTERCONNECTION (DEDICATED TRANSPORT)																	
	INTEROFFICE CHANNEL - DEDICATED TRANSPORT																
		Interoffice Channel - Dedicated Transport - 2-Wire Voice Grade - Per Mile per month			OHM	1L5NF	0.0282										
		Interoffice Channel - Dedicated Transport- 2- Wire Voice Grade - Facility Termination per month			OHM	1L5NF	18.00	137.48	52.58								
		Interoffice Channel - Dedicated Transport - 56 kbps - per mile per month			OHM	1L5NK	0.0282										
		Interoffice Channel - Dedicated Transport - 56 kbps - Facility Termination per month			OHM	1L5NK	17.40	137.48	52.58								
		Interoffice Channel - Dedicated Transport - 64 kbps - per mile per month			OHM	1L5NK	0.0282										
		Interoffice Channel - Dedicated Transport - 64 kbps - Facility Termination per month			OHM	1L5NK	17.40	137.48	52.58								
		Interoffice Channel - Dedicated Channel - DS1 - Per Mile per month			OH1, OH1MS	1L5NL	0.5753										
		Interoffice Channel - Dedicated Tranport - DS1 - Facility Termination per month			OH1, OH1MS	1L5NL	71.29	217.17	163.75								
		Interoffice Channel - Dedicated Transport - DS3 - Per Mile per month			OH3, OH3MS	1L5NM	12.98										
		Interoffice Channel - Dedicated Transport - DS3 - Facility Termination per month			OH3, OH3MS	1L5NM	720.38	794.94	579.55								
	LOCAL CHANNEL - DEDICATED TRANSPORT																
		Local Channel - Dedicated - 2-Wire Voice Grade per month			OHM	TEFV2	11.24	553.80	89.69								
		Local Channel - Dedicated - 4-Wire Voice Grade per month			OHM	TEFV4	12.03	562.23	92.67								
		Local Channel - Dedicated - DS1 per month			OH1	TEFHG	27.05	534.48	462.69								
		Local Channel - Dedicated - DS3 Facility Termination per month			OH3	TEFHJ	298.92	438.46	256.30								
	LOCAL INTERCONNECTION MID-SPAN MEET																
		Local Channel - Dedicated - DS1 per month			OH1MS	TEFHG	0.00	0.00									
		Local Channel - Dedicated - DS3 per month			OH3MS	TEFHJ	0.00	0.00									
	MULTIPLEXERS																
		Channelization - DS1 to DS0 Channel System			OH1, OH1MS	SATN1	146.69	197.78	140.06								
		DS3 to DS1 Channel System per month			OH3, OH3MS	SATNS	233.10	403.97	234.40								
		DS3 Interface Unit (DS1 COCI) per month			OH1, OH1MS	SATCO	16.07	13.09	9.38								
SIGNALING (CCS7)																	
		CCS7 Signaling Connection, Per link (A link)			UDB	TPP6A	18.22	278.02	278.02								
		CCS7 Signaling Connection, Per link (B link) (also known as D link)			UDB	TPP6B	18.22	278.02	278.02								

LOCAL INTERCONNECTION - North Carolina														Attachment: 3		Exhibit: A	
CATEGORY		RATE ELEMENTS	Interim	Zone	BCS	USOC	RATES($)					Svc Order Submitted Elec per LSR	Svc Order Submitted Manually per LSR	Incremental Charge - Manual Svc Order vs. Electronic-1st	Incremental Charge - Manual Svc Order vs. Electronic-Add'l	Incremental Charge - Manual Svc Order vs. Electronic-Disc 1st	Incremental Charge - Manual Svc Order vs. Electronic-Disc Add'l
							Rec	Nonrecurring		Nonrecurring Disconnect		OSS Rates($)					
								First	Add'l	First	Add'l	SOMEC	SOMAN	SOMAN	SOMAN	SOMAN	SOMAN
		CCS7 Signaling Connection, Switched access service, interface groups, transmissiom paths 6 DS1 level path with bit stream signaling			UDB	TPP6X	18.22	278.02	278.02								
		CCS7 Signaling Connection-A link, per month			UDB	TPP9A	18.22	278.02	278.02								
		CCS7 Signaling Connection-B link(also known as D link) per month			UDB	TPP9B	18.22	278.02	278.02								
		CCS7 Signaling Connection, Switched access service, interface groups, transmissiom paths 9 DS3 level path with bit stream signaling			UDB	TPP9X	18.22	278.02	278.02								
		CCS7 Signaling Termination, Per STP Port			UDB	PT8SX	132.83										
		CCS7 Signaling Usage, Per ISUP Message					0.00004										
		CCS7 Signaling Usage, Per TCAP Message					0.00009										
		CCS7 Signaling Usage Surrogate, per link per LATA			UDB	STU56	338.98										
		CCS7 Signaling Point Code, per Originating Point Code Establishment or Change, per STP affected			UDB	CCAPO		40.00	40.00								
		CCS7 Signaling Point Code, per Destination Point Code Establishment or Change, Per Stp Affected			UDB	CCAPD		8.00	8.00								
	Notes: If no rate is identified in the contract, the rates, terms, and conditions for the specific service or function will be as set forth in applicable BellSouth tariff.																

LOCAL INTERCONNECTION - South Carolina														Attachment: 3		Exhibit: A	
CATEGORY	RATE ELEMENTS	Interim	Zone	BCS	USOC	RATES($)					Svc Order Submitted Elec per LSR	Svc Order Submitted Manually per LSR	Incremental Charge - Manual Svc Order vs. Electronic-1st	Incremental Charge - Manual Svc Order vs. Electronic-Add'l	Incremental Charge - Manual Svc Order vs. Electronic-Disc 1st	Incremental Charge - Manual Svc Order vs. Electronic-Disc Add'l
						Rec	Nonrecurring		Nonrecurring Disconnect		OSS Rates($)					
							First	Add'l	First	Add'l	SOMEC	SOMAN	SOMAN	SOMAN	SOMAN	SOMAN
LOCAL INTERCONNECTION (CALL TRANSPORT AND TERMINATION)																
	NOTE: "bk" beside a rate indicates that the Parties have agreed to bill and keep for that element pursuant to the terms and conditions in Attachment 3.															
	TANDEM SWITCHING															
	Tandem Switching Function Per MOU					0.0007360bk										
	Multiple Tandem Switching, per MOU (applies to intial tandem only)					0.000736										
	Tandem Intermediary Charge, per MOU*					0.0025										
	*** This charge is applicable only to transit traffic and is applied in addition to applicable switching and/or interconnection charges.**															
	TRUNK CHARGE															
	Installation Trunk Side Service - per DS0			OHD	TPP6X		21.65	8.16								
	Installation Trunk Side Service - per DS0			OHD	TPP9X		21.65	8.16								
	Dedicated End Office Trunk Port Service-per DS0**			OHD	TDEOP	0.00										
	Dedicated End Office Trunk Port Service-per DS1**			OH1 OH1MS	TDE1P	0.00										
	Dedicated Tandem Trunk Port Service-per DS0**			OHD	TDWOP	0.00										
	Dedicated Tandem Trunk Port Service-per DS1**			OH1 OH1MS	TDW1P	0.00										
	**** This rate element is recovered on a per MOU basis and is included in the End Office Switching and Tandem Switching, per MOU rate elements**															
	COMMON TRANSPORT (Shared)															
	Common Transport - Per Mile, Per MOU					0.0000045bk										
	Common Transport - Facilities Termination Per MOU					0.0004095bk										
LOCAL INTERCONNECTION (DEDICATED TRANSPORT)																
	INTEROFFICE CHANNEL - DEDICATED TRANSPORT															
	Interoffice Channel - Dedicated Transport - 2-Wire Voice Grade - Per Mile per month			OHM	1L5NF	0.0167										
	Interoffice Channel - Dedicated Transport- 2- Wire Voice Grade - Facility Termination per month			OHM	1L5NF	24.30	40.63	27.47	16.77	6.91						
	Interoffice Channel - Dedicated Transport - 56 kbps - per mile per month			OHM	1L5NK	0.0167										
	Interoffice Channel - Dedicated Transport - 56 kbps - Facility Termination per month			OHM	1L5NK	16.76	40.63	27.47	16.77	6.91						
	Interoffice Channel - Dedicated Transport - 64 kbps - per mile per month			OHM	1L5NK	0.0167										
	Interoffice Channel - Dedicated Transport - 64 kbps - Facility Termination per month			OHM	1L5NK	16.76	40.63	27.47	16.77	6.91						
	Interoffice Channel - Dedicated Channel - DS1 - Per Mile per month			OH1, OH1MS	1L5NL	0.3415										
	Interoffice Channel - Dedicated Tranport - DS1 - Facility Termination per month			OH1, OH1MS	1L5NL	77.14	89.47	81.99	16.39	14.48						
	Interoffice Channel - Dedicated Transport - DS3 - Per Mile per month			OH3, OH3MS	1L5NM	8.02										
	Interoffice Channel - Dedicated Transport - DS3 - Facility Termination per month			OH3, OH3MS	1L5NM	880.65	279.37	163.12	60.33	58.59						
	LOCAL CHANNEL - DEDICATED TRANSPORT															
	Local Channel - Dedicated - 2-Wire Voice Grade per month			OHM	TEFV2	15.33	193.53	33.24	36.72	3.21						
	Local Channel - Dedicated - 4-Wire Voice Grade per month			OHM	TEFV4	16.54	193.97	33.68	37.19	3.68						
	Local Channel - Dedicated - DS1 per month			OH1	TEFHG	42.62	177.87	154.06	22.24	15.30						
	Local Channel - Dedicated - DS3 Facility Termination per month			OH3	TEFHJ	446.00	452.52	264.53	119.75	83.77						
	LOCAL INTERCONNECTION MID-SPAN MEET															
	Local Channel - Dedicated - DS1 per month			OH1MS	TEFHG	0.00	0.00									
	Local Channel - Dedicated - DS3 per month			OH3MS	TEFHJ	0.00	0.00									
	MULTIPLEXERS															
	Channelization - DS1 to DS0 Channel System			OH1, OH1MS	SATN1	107.57	91.24	62.71	10.56	9.81						
	DS3 to DS1 Channel System per month			OH3, OH3MS	SATNS	144.02	178.54	94.18	33.33	31.90						
	DS3 Interface Unit (DS1 COCI) per month			OH1, OH1MS	SATCO	8.64	6.59	4.73								
SIGNALING (CCS7)																
	CCS7 Signaling Termination, Per STP Port			UDB	PT8SX	163.49										
	CCS7 Signaling Usage, Per TCAP Message					0.0000692										
	CCS7 Signaling Connection, Per link (A link)			UDB	TPP6A	16.93	35.61	35.61	16.48	16.48						

LOCAL INTERCONNECTION - South Carolina														Attachment: 3		Exhibit: A	
CATEGORY		RATE ELEMENTS	Interim	Zone	BCS	USOC	RATES($)					Svc Order Submitted Elec per LSR	Svc Order Submitted Manually per LSR	Incremental Charge - Manual Svc Order vs. Electronic-1st	Incremental Charge - Manual Svc Order vs. Electronic-Add'l	Incremental Charge - Manual Svc Order vs. Electronic-Disc 1st	Incremental Charge - Manual Svc Order vs. Electronic-Disc Add'l
							Rec	Nonrecurring		Nonrecurring Disconnect		OSS Rates($)					
								First	Add'l	First	Add'l	SOMEC	SOMAN	SOMAN	SOMAN	SOMAN	SOMAN
		CCS7 Signaling Connection, Per link (B link) (also known as D link)			UDB	TPP6B	16.93	35.61	35.61	16.48	16.48						
		CCS7 Signaling Connection, Switched access service, interface groups, transmissiom paths 6 DS1 level path with bit stream signaling			UDB	TPP6X	16.93	35.61	35.61	16.48	16.48						
		CCS7 Signaling Connection-A link, per month			UDB	TPP9A	16.93	35.61	35.61	16.48	16.48						
		CCS7 Signaling Connection-B link(also known as D link) per month			UDB	TPP9B	16.93	35.61	35.61	16.48	16.48						
		CCS7 Signaling Connection, Switched access service, interface groups, transmissiom paths 9 DS3 level path with bit stream signaling			UDB	TPP9X	16.93	35.61	35.61	16.48	16.48						
		CCS7 Signaling Usage, Per ISUP Message					0.0000173										
		CCS7 Signaling Usage Surrogate, per link per LATA			UDB	STU56	791.37										
		CCS7 Signaling Point Code, per Originating Point Code Establishment or Change, per STP affected			UDB	CCAPO		29.08	29.08	35.65	35.65						
		CCS7 Signaling Point Code, per Destination Point Code Establishment or Change, Per Stp Affected			UDB	CCAPD		29.08	29.08	35.65	35.65						
	Notes: If no rate is identified in the contract, the rates, terms, and conditions for the specific service or function will be as set forth in applicable BellSouth tariff.																

LOCAL INTERCONNECTION - Tennessee														Attachment: 3		Exhibit: A	
CATEGORY	RATE ELEMENTS	Interim	Zone	BCS	USOC	RATES($)					Svc Order Submitted Elec per LSR	Svc Order Submitted Manually per LSR	Incremental Charge - Manual Svc Order vs. Electronic-1st	Incremental Charge - Manual Svc Order vs. Electronic-Add'l	Incremental Charge - Manual Svc Order vs. Electronic-Disc 1st	Incremental Charge - Manual Svc Order vs. Electronic-Disc Add'l
						Rec	Nonrecurring		Nonrecurring Disconnect		OSS Rates($)					
							First	Add'l	First	Add'l	SOMEC	SOMAN	SOMAN	SOMAN	SOMAN	SOMAN
LOCAL INTERCONNECTION (CALL TRANSPORT AND TERMINATION)																
	NOTE: "bk" beside a rate indicates that the Parties have agreed to bill and keep for that element pursuant to the terms and conditions in Attachment 3.															
	TANDEM SWITCHING															
	Tandem Switching Function Per MOU					0.0009778bk										
	Multiple Tandem Switching, per MOU (applies to intial tandem only)					0.0009778										
	Tandem Intermediary Charge, per MOU*					0.0025										
	*** This charge is applicable only to transit traffic and is applied in addition to applicable switching and/or interconnection charges.**															
	TRUNK CHARGE															
	Installation Trunk Side Service - per DS0			OHD	TPP6X		21.59	8.09								
	Installation Trunk Side Service - per DS0			OHD	TPP9X		21.59	8.09								
	Dedicated End Office Trunk Port Service-per DS0**			OHD	TDEOP	0.00										
	Dedicated End Office Trunk Port Service-per DS1**			OH1 OH1MS	TDE1P	0.00										
	Dedicated Tandem Trunk Port Service-per DS0**			OHD	TDWOP	0.00										
	Dedicated Tandem Trunk Port Service-per DS1**			OH1 OH1MS	TDW1P	0.00										
	**** This rate element is recovered on a per MOU basis and is included in the End Office Switching and Tandem Switching, per MOU rate elements**															
	COMMON TRANSPORT (Shared)															
	Common Transport - Per Mile, Per MOU					0.0000064bk										
	Common Transport - Facilities Termination Per MOU					0.0003871bk										
LOCAL INTERCONNECTION (DEDICATED TRANSPORT)																
	INTEROFFICE CHANNEL - DEDICATED TRANSPORT															
	Interoffice Channel - Dedicated Transport - 2-Wire Voice Grade - Per Mile per month			OHM	1L5NF	0.0174										
	Interoffice Channel - Dedicated Transport- 2- Wire Voice Grade - Facility Termination per month			OHM	1L5NF	18.58	55.39	17.37	27.96	3.51						
	Interoffice Channel - Dedicated Transport - 56 kbps - per mile per month			OHM	1L5NK	0.0174										
	Interoffice Channel - Dedicated Transport - 56 kbps - Facility Termination per month			OHM	1L5NK	17.98	55.39	17.37	27.96	3.51						
	Interoffice Channel - Dedicated Transport - 64 kbps - per mile per month			OHM	1L5NK	0.0174										
	Interoffice Channel - Dedicated Transport - 64 kbps - Facility Termination per month			OHM	1L5NK	17.98	55.39	17.37	27.96	3.51						
	Interoffice Channel - Dedicated Channel - DS1 - Per Mile per month			OH1, OH1MS	1L5NL	0.3562										
	Interoffice Channel - Dedicated Tranport - DS1 - Facility Termination per month			OH1, OH1MS	1L5NL	77.86	112.40	76.27	19.55	14.99						
	Interoffice Channel - Dedicated Transport - DS3 - Per Mile per month			OH3, OH3MS	1L5NM	2.34										
	Interoffice Channel - Dedicated Transport - DS3 - Facility Termination per month			OH3, OH3MS	1L5NM	848.99	395.29	176.56	109.04	105.91						
	LOCAL CHANNEL - DEDICATED TRANSPORT															
	Local Channel - Dedicated - 2-Wire Voice Grade per month			OHM	TEFV2	15.29	199.33	24.16	54.81	4.80						
	Local Channel - Dedicated - 4-Wire Voice Grade per month			OHM	TEFV4	16.18	201.53	24.83	55.52	5.51						
	Local Channel - Dedicated - DS1 per month			OH1	TEFHG	32.25	277.35	233.26	33.18	22.30						
	Local Channel - Dedicated - DS3 Facility Termination per month			OH3	TEFHJ	611.30	595.37	304.50	215.82	151.15						
	LOCAL INTERCONNECTION MID-SPAN MEET															
	Local Channel - Dedicated - DS1 per month			OH1MS	TEFHG	0.00	0.00									
	Local Channel - Dedicated - DS3 per month			OH3MS	TEFHJ	0.00	0.00									
	MULTIPLEXERS															
	Channelization - DS1 to DS0 Channel System			OH1, OH1MS	SATN1	80.77	141.87	77.11	14.51	13.46						
	DS3 to DS1 Channel System per month			OH3, OH3MS	SATNS	222.98	308.03	108.47	44.47	42.62						
	DS3 Interface Unit (DS1 COCI) per month			OH1, OH1MS	SATCO	17.58	6.07	4.66								
SIGNALING (CCS7)																
	CCS7 Signaling Termination, Per STP Port			UDB	PT8SX	138.41										
	CCS7 Signaling Usage, Per TCAP Message					0.0000916										
	CCS7 Signaling Connection, Per link (A link)			UDB	TPP6A	17.84	130.84	130.84					20.35	20.35	13.32	13.32

LOCAL INTERCONNECTION - Tennessee														Attachment: 3		Exhibit: A	
CATEGORY		RATE ELEMENTS	Interim	Zone	BCS	USOC	RATES($)					Svc Order Submitted Elec per LSR	Svc Order Submitted Manually per LSR	Incremental Charge - Manual Svc Order vs. Electronic-1st	Incremental Charge - Manual Svc Order vs. Electronic-Add'l	Incremental Charge - Manual Svc Order vs. Electronic-Disc 1st	Incremental Charge - Manual Svc Order vs. Electronic-Disc Add'l
							Rec	Nonrecurring		Nonrecurring Disconnect		OSS Rates($)					
								First	Add'l	First	Add'l	SOMEC	SOMAN	SOMAN	SOMAN	SOMAN	SOMAN
		CCS7 Signaling Connection, Per link (B link) (also known as D link)			UDB	TPP6B	17.84	130.84	130.84					20.35	20.35	13.32	13.32
		CCS7 Signaling Connection, Switched access service, interface groups, transmissiom paths 6 DS1 level path with bit stream signaling			UDB	TPP6X	17.84	130.84	130.84					20.35	20.35	13.32	13.32
		CCS7 Signaling Connection-A link, per month			UDB	TPP9A	17.84	130.84	130.84					20.35	20.35	13.32	13.32
		CCS7 Signaling Connection-B link(also known as D link) per month			UDB	TPP9B	17.84	130.84	130.84					20.35	20.35	13.32	13.32
		CCS7 Signaling Connection, Switched access service, interface groups, transmissiom paths 9 DS3 level path with bit stream signaling			UDB	TPP9X	17.84	130.84	130.84					20.35	20.35	13.32	13.32
		CCS7 Signaling Usage, Per ISUP Message					0.0000373										
		CCS7 Signaling Usage Surrogate, per link per LATA			UDB	STU56	352.30										
		Signaling Point Code, per Originating Point Code Establishment or Change, per STP			UDB	CCAPO		121.77	121.77					20.35	20.35	13.32	13.32
	Notes: If no rate is identified in the contract, the rates, terms, and conditions for the specific service or function will be as set forth in applicable BellSouth tariff.																

Attachment 3
Exhibit F

BellSouth Jurisdictional Factors Reporting Guide

Issue 5.0

December 3, 2003

Table of Contents

Revisions…… 3

1.0 Introduction…….…..… 4
2.0 Jurisdictions…….. 4
3.0 Factors……..……. 5
3.1 General…….……..……..…. 5
3.2 PIU - Percent Interstate Usage…….… 6
3.3 PLU - Percent Local Usage…….. 7
3.4 PLF - Percent Local Facility……. 7
4.0 Service Reporting Requirements…… 8
4.1 BellSouth Switched Access (SWA) Feature Group A (FGA) PIU (PIUA)… 8
4.2 BellSouth SWA FGB PIU (PIUB)……. 9
4.3 BellSouth SWA FGD & Local Terminating PIU (TPIU)…… 9
4.4 BellSouth Local Interconnection PLU……..…...…… 9
4.5 BellSouth SWA 500 PIU (ZP15)…… 10
4.6 BellSouth SWA 700 Access Service (ZP17)…….……... 10
4.7 BellSouth SWA 8XX Toll Free Dialing Ten Digit Screening (ZP18)…… 10
4.8 BellSouth SWA 900 Service (ZP19)……..… 10
4.9 BellSouth SWA Transport PIUE……..……. 10
4.10 BellSouth Local Interconnection Transport PLF……...… 11
4.11 BellSouth CCS7 Access Arrangements SPIU/SPLU…… 11
4.12 BellSouth Line Information Data Base Service LIDB….……..…… 12
5.0 Report Process…….…. 12
6.0 Frequency of Reporting…….…… 13
7.0 Audits…… 14
7.1 Audit Request…….. 14
7.2 Audit Compliance…… 14
8.0 Ordering…… 15

Revisions

Issue 1.0

The initial version of the *BellSouth Jurisdictional Factors Reporting Guide* was issued on August 15, 2001.

Issue 2.0

Incorporated references to *RF-3995 Jurisdictional Factor Report Form* – issued on December 21, 2001.

Issue 3.0

Added minor clarification concerning value to be used if PLF or PLU factors are not reported – issued on August 2, 2002.

Issue 4.0

Added Clarification concerning reporting of SPIU Factor and added language describing SPLU Factor and calculation of intrastate of non-local traffic – issued on October 17, 2002.

Issue 5.0

Revised the e-mail address that is utilized to report jurisdictional factors by electronic mail – issued on December 3, 2003.

BellSouth Jurisdictional Factors Reporting Guide

1.0 Introduction

Jurisdictional factors are utilized to apportion the billing of BellSouth Access and Local Interconnections Services between the interstate, intrastate and local jurisdictions. The rates, terms and conditions applicable to the provision of services are determined based upon the jurisdictional use of the service. Where sufficient data is available BellSouth will determine the percentage of use by jurisdiction for billing applications in accordance with BellSouth tariffs and contractual agreements. Absent sufficient data it is incumbent upon BellSouth customers to accurately report jurisdictional factors in order for BellSouth to bill the associated services per contractual and regulatory requirements. This document serves as a supplemental guide to the BellSouth tariffs and contracts for the preparation and reporting of the following jurisdictional factors related to Access and Local Interconnection Services

PIU - Percent Interstate Usage
PLU - Percent Local Usage
PLF - Percent Local Facility

These factors are reported by service at a state level as required. Unique service requirements are identified later in this Guide. In general, the PIU factors are required for Access Services and Local Interconnection Services to apportion the billing between the state and interstate jurisdictions. Competitive Local Exchange Carriers (CLECs) are also required to report PLU and PLF factors in addition to PIU factors to further apportion their intrastate use of Local Interconnection services between the state and local jurisdiction. Failure to report values for PLU and/or PLF shall result in the default value of zero percent being applied for these factors. The local jurisdiction is considered a subset of the intrastate jurisdiction in the determination and application of the PLU and PLF factors. The following sections provide information concerning the determination of factors, the application of factors, reporting procedures and customer records requirements. This information is provided as an aide in reporting jurisdictional factors and shall be used as a supplement to BellSouth Tariffs and/or contractual agreements with BellSouth.

2.0 Jurisdictions

There are three basic jurisdictions related to BellSouth Access and Local Interconnections Services. These are the Interstate, Intrastate and the Local jurisdiction. The jurisdiction is determined based upon the physical locations of the

origination and termination points of the communication. An ordinary voice communications telephone call that originates from a location that is in the same state

as the terminating number or called party shall be designated as an intrastate call and the minutes of use for that call shall be billed per the intrastate jurisdictional requirements. Conversely, a call that originates in a different state than the terminating location or called number shall be designated as interstate traffic. A call that originates and terminates within a local calling area as specified in the applicable contract or tariff is designated as local traffic.

The Jurisdiction of a call is determined solely by the location of the party initiating the call and the location of the called party. The origination and termination points are not necessarily determined based upon the carrier's network entry and exit points but rather on the origination and termination locations of the end users or the entities that are involved in the communications or information exchange. When multiple networks or carriers are involved, a particular carrier's transport of the service may be totally within a state boundary, however, the ultimate end points of the call or information exchange may be in different states. In this situation, the traffic shall be designated as interstate for all carriers even though a particular carrier's transport service begins and ends within a state boundary. In other words, jurisdiction of a call is determined solely by the locations of the originating and terminating parties and is not affected by the manner in which the call is routed through the telecommunications network.

The location of the origination or termination end points is determined based upon the location of the serving central offices. If a call terminates to an office that is associated with a LATA in an adjoining state (cross boundary) the call is considered to complete in the state where the central office is located.

3.0 Factors

3.1. General

BellSouth Jurisdictional factors are jurisdictional projections of the percentages of use of access and interconnection services for billing purposes. Factors shall be provided with the first request for each service in each state and are updated quarterly based upon the most recent three months of data. Factors for the initial request shall be reported via *RF-3995 Juridictional Factor Report* that is located at http://www.interconnection.bellsouth.com/forms/index.html, CLEC Forms Online or Interexchange Carrier Webforms. If factors are not updated then BellSouth will

assume that the percentages are the same as previously provided. If a valid quarterly report has never been received then BellSouth may utilize the factor(s) provided with the initial order for service, the most recent audit results if an audit has been performed or the default value for the particular factor. In cases where sufficient data is available then BellSouth will determine the factors to be utilized for billing.

3.2. PIU - Percent Interstate Usage

This factor is the percentage of use that is interstate. For services that are billed on a per minute of use (MOU) basis the PIU is based upon the traffic to and from the BellSouth Network. Further, depending upon the type of usage based service, the PIU may represent the percentage of both originating and terminating usage or may only represent the percentage of terminating usage that is jurisdictionally interstate. Any traffic that originates/terminates in the reporting carrier's network that ultimately originates/terminates to the BellSouth Network through another carrier's network shall be included in the reported PIU factor(s) by the intermediate carrier that accepts billing for the usage. This relationship is usually established per an agency authorization. In these situations, the carrier that accepts billing from BellSouth for the usage to and from BellSouth shall include such usage in their factor calculations that are reported to BellSouth. Any usage that transits a reporting carrier's network shall be included in the jurisdictional factor reporting by the billed carrier to the originating/terminating carrier regardless of the number of carriers involved in the transport of the traffic. It is incumbent upon the carrier that is billed for originating/terminating traffic to the BellSouth Network to report PIU factors to BellSouth that are representative of the actual jurisdiction of traffic delivered to BellSouth.

For services that are not billed on a usage sensitive basis (e.g. Switched Transport Local Channel, Interoffice Channels & Multiplexing Equipment) the total use of the service shall be considered in determining the PIU factors including originating and terminating usage to the BellSouth Network.

The PIU factor is calculated as follows where MOUs are billed minutes of use:

$$\frac{\textit{Total Interstate MOUs}}{\textit{Total Usage MOUs}}$$

Total Usage includes interstate, intrastate and local usage. This percentage is calculated on a statewide basis. Both Interexchange Carriers and Facility Based Competitive Local Exchange Carriers (CLECs) are required to report PIU factors per their Access Carrier Name Abbreviation (ACNA).

3.3. PLU – Percent Local Usage

This factor is the percentage of intrastate terminating usage that is categorized as Local Jurisdiction. For purposes of this guide the total intrastate usage includes intrastate local usage and intrastate non-local usage. The local jurisdiction is applicable to Competitive Local Exchange Carriers (CLECs) that are terminating local traffic from their network to the BellSouth network. CLECs that totally utilize resale or unbundled network elements to provision local services are not required to report PLU factors. Interexchange Carriers that do not terminate local traffic as a CLEC are not required to report PLU factors. Terminating party pays usage shall be excluded from the PLU calculations (same as TPIU, Section 4.3). The local jurisdiction is normally defined per Local Interconnection contractual agreements and is calculated as follows where MOUs are billed minutes of use:

$$\frac{\textit{Total Local Terminating MOUs}}{\textit{Total Intrastate Terminating MOUs}}$$

The total intrastate terminating minutes can be determined by multiplying the total terminating minutes by (1- TPIU). Therefore the PLU may also be calculated as follows:

$$\frac{\textit{Total Local Terminating MOUs}}{\textit{(Total Terminating MOUs) x (1-TPIU)}}$$

This factor is calculated on a statewide basis by Access Carrier Name Abbreviation (ACNA).

3.4. PLF – Percent Local Facility

The PLF is the percentage of the intrastate use of Switched Dedicated Transport and/or Local Interconnection Transport that is jurisdictionally local. This factor is similar to PLU except that it applies to dedicated transport services that are billed on a non-usage sensitive basis. Reporting of this factor is required by Facility Based CLECs utilizing BellSouth Local Interconnection transport services. Factors for the initial request shall be reported via *RF-3995 Jurisdictional Factor Report* **(**see http://www.interconnection.bellsouth.com/forms/index.html, CLEC Forms Online or Interexchange Carrier Webforms). In addition, IXCs that also function as a CLEC and utilize Switched Dedicated Transport and/or Local

Interconnection transport to interconnect with the Bellsouth Network for the exchange of local traffic are required to report a PLF. As with PIU factors for non-usage sensitive billed services, the total use of these services are considered in determining the factor (i.e. all originating and terminating usage). The PLF represents the percentage of use of all the Switched Dedicated Transport and Local Interconnection Transport provisioned by BellSouth that is jurisdictionally local as defined per contract or tariff. The PLF for these services is based upon the usage that is transported by these services as follows:

$$\frac{\textit{Total Local MOUs}}{\textit{Total Intrastate MOUs}}$$

The total intrastate minutes can be determined by multiplying the total minutes by (1- PIUE) where PIUE is the factor applicable to Switched Dedicated Transports and Local Interconnection Transport. Therefore the PLF may also be calculated as follows:

$$\frac{\textit{Total Local Minutes}}{\textit{(Total Minutes) x (1-PIUE)}}$$

This factor may is calculated on a statewide basis and reported per Access Carrier Name Abbreviation (ACNA).

4.0 Service Reporting Requirements

Jurisdictional factors shall be developed and reported for particular services as specified in the BellSouth Tariffs and as specified in applicable contracts that are provisioned for a carrier. Factor reporting requirements for these services are discussed in the following subsections.

4.1. BellSouth Switched Access (SWA) Feature Group A (FGA) PIU (PIUA)

Usage based rate elements are billed for FGA in both the originating and terminating directions. This usage shall be apportioned to the intrastate and interstate jurisdictions. A single PIU factor shall be reported at the state level to apportion all the applicable usage (both originating, terminating and transit) between the state and interstate jurisdictions. All usage received from or delivered to the BellSouth network and through the BellSouth Network to

connecting local exchange carriers shall be considered in the determination of the PIU for FGA.

4.2. BellSouth SWA FGB PIU (PIUB)

Usage based rate elements are billed for FGB in both the originating and terminating directions. This usage shall be apportioned to the state and interstate jurisdictions. A single PIU factor shall be reported at the state level to apportions all the applicable usage (both originating and terminating) based elements between the intrastate and interstate jurisdictions.

4.3. BellSouth SWA FGD & Local Terminating PIU (TPIU)

Usage based rate elements are billed for FGD in both the originating and terminating directions. BellSouth is able to determine the jurisdiction of originating FGD traffic per the billing records generated with each call. Therefore a factor to apportion usage for originating FGD traffic is not required from the reporting carrier. Originating traffic consists of calls where the location of the calling number is served from a BellSouth end office that is connecting to a carrier for completion to the called number location. The terminating usage shall be apportioned to the state and interstate jurisdictions per a TPIU factor. A single TPIU factor for terminating FGD traffic shall be reported at the state level to apportion the applicable usage based elements between the intrastate and interstate jurisdictions. Terminating party pays usage (e.g. 800 terminating traffic) shall be excluded from the TPIU calculations.

Local traffic shall also be included when determining the TPIU. If the reporting carrier functions as an Interexchange and Local carrier then all of the terminating usage sent to BellSouth will be apportioned between the state and interstate jurisdictions per a single TPIU. This factor shall be reported at the state level per Access Carrier Name Abbreviation (ACNA). A TPIU shall be reported by CLECs even if it does not terminate any interstate traffic to the BellSouth network. In this situation, the CLEC should report a TPIU equal to zero (0.00) to indicate that all of its traffic is Intrastate and Local.

4.4. BellSouth Local Interconnection PLU

The percent of usage to be billed per the Local Interconnection contracts is determined by the PLU factor. This factor shall be developed in conjunction with the TPIU factor discussed in the previous subsection. After the TPIU is

determined then the percentage of the intrastate usage that is local shall be determined. By definition, the percentage of intrastate traffic of the total terminating traffic is equal to 1 – TPIU. The total terminating traffic to be considered is discussed in the TPIU subsection. The PLU represents the percentage of intrastate terminating usage that is jurisdictionally local. This factor is reported at the state level by ACNA.

4.5. BellSouth SWA 500 PIU (ZP15)

The SWA 500 PIU factor will be applied to the carrier's originating 500 service MOUS and to the calls to apportion the usage and calls between state and interstate jurisdiction. This factor represents the percentage of originating 500 minutes and calls that are interstate jurisdiction.

4.6. BellSouth SWA 700 Access Service (ZP17)

The SWA 700 PIU factor will be applied to the carrier's originating 700 service MOUS to apportion the usage between state and interstate jurisdiction. This factor represents the percentage of originating 700 minutes that are interstate jurisdiction.

4.7. BellSouth SWA 8XX Toll Free Dialing Ten Digit Screening (ZP18)

The SWA 8XX PIU factor will be applied to the carrier's originating 8XX service MOUS and queries to apportion the usage and queries between the intrastate and interstate jurisdiction. This factor represents the percentage of originating 8XX minutes and queries that are interstate jurisdiction.

4.8. BellSouth SWA 900 Service (ZP19)

The SWA 900 PIU factor will be applied to the carrier's originating 900 service MOUS to apportion the usage between the intrastate and interstate jurisdiction. This factor represents the percentage of originating 900 minutes that are interstate jurisdiction.

4.9. BellSouth SWA Transport PIUE

BellSouth SWA Transport PIUE is applicable to the following SWA Transport Services:

SWA Local Channel
SWA Dedicated Interoffice Channels
SWA Channelization Equipment
Local Interconnection Dedicated Transport
Dedicated End Office Trunk Port Service
Dedicated Tandem End Office Trunk Port Service
SWA Expanded Interconnection Cross-Connects

The PIUE may also be applied to other flat rated charges not specifically covered by other PIU categories.

The utilization of these transport services is considered in combination to determine the PIUE factors. The PIUE will be applied to the recurring billing elements for these services to apportion billing between the intrastate and interstate jurisdictions. The total jurisdictional use of these services shall be considered when determining PIUE factors including all originating and terminating usage. The PIUE represents the percentage that these services are utilized for interstate jurisdiction applications.

4.10. BellSouth Local Interconnection Transport PLF

This factor is utilized to apportion the use of SWA Local Channel, SWA Dedicated Interoffice Channels, SWA Channelization Equipment, Local Interconnection Dedicated Transport, Tandem/End Office Ports and various other flat rated services to the Local Jurisdiction for billing purposes (per tariff and contractual agreements). This factor is developed in conjunction with the PIUE. The PLF represents the percentage of the Intrastate use of these services that is jurisdictionally Local whereby the Intrastate percentage is defined as 1-PIUE. The total jurisdictional use of these services shall be considered when determining PLF and should include originating and terminating traffic. This factor is reported at the state level by ACNA.

4.11.a. BellSouth CCS7 Access Arrangement SPIU

If a carrier has access to CCS7 Signaling Services monitoring software, then that carrier may use this software to identify the appropriate jurisdictional factors (SPIU/SPLU) on its signaling with BellSouth and report these factors in the same format detailed herein.

If, however, a carrier does not have access to CCS7 Signaling Services monitoring software, then as APIU for CCS7 Signaling Services shall be developed and reported based upon the associated billed minutes of use for SWA

Usage- based services. The billed minutes that are jurisdictionally ***interstate*** as a percentage of the total billed minutes shall be reported as the CCS7 Access SPIU.

4.11.a. BellSouth CCS7 Access Arrangement SPLU

If a carrier has access to CCS7 Signaling Services monitoring software, then that carrier may use this software to identify the appropriate jurisdictional factors (SPIU/SPLU) on its signaling with BellSouth and report these factors in the same format detailed herein.

If, however, a carrier does not have access to CCS7 Signaling Services monitoring software, then an SPLU for CCS7 Signaling Services shall be developed and reported based upon the associated billed minutes of use for SWA Usage based services and Local Interconnection services. The billed minutes that are jurisdictionally ***local*** as a percentage of the total *intrastate* billed minutes shall be reported as the CCS7 Access SPLU. Where the customer is a "Third Party Provider" of CCS7 Access services then the SPLU will be developed based upon a weighted average of all of that provider's "Third Party Customer's" end user traffic.

4.11.c. BellSouth CCS7 Access Arrangement: Special Note

In determining a factor for intrastate, ***non-local traffic,*** consider the following example:

Based on evaluating SWA usage-based services and local interconnection services, a BellSouth carrier customer has determined that its signaling traffic merits an SPIU of 80 and an SPLU of 60. As such, the following will then be true:

80% of the carrier's signaling messages will be billed as ***interstate.***
Of the remaining **20%,** 60% of the 20% (.60 x .20 = .12), **12%** will be billed as ***local***.

And, the final **8%** will be billed as ***intrastate, non-local.***

5. BellSouth Line Information Data Base Service LIDB

There are two factors reported for LIDB service, a PIU factor and a PCLU (Percent CLEC LIDB Usage). These factors are utilized to apportion the queries

to the LIDB Data Base between the interstate, intrastate and local jurisdiction. First, the total number of queries in the study period is determined and then the PCLU shall be calculated. The PCLU represents the percentage of LIDB queries that are jurisdictionally Local as a percentage of the total number of queries. The basic formula for the PCLU calculation is as follows:

$$\frac{\textit{Number of Local Queries}}{\textit{Total Number of Queries}}$$

After the PCLU is determined, the LIDB PIU shall be determined. The LIDB PIU represents the percentage of queries that are jurisdictionally interstate of the total number of queries minus the number of queries that are jurisdictionally local. The formula for the LIDB PIU is as follows:

$$\frac{\textit{Number of Interstate Queries}}{\textit{(Total Number of Queries) – (Number of Local Queries)}}$$

5.0 Report Process

The following summarizes the major steps to develop and report jurisdictional factors:

- Install/modify systems to capture usage data with sufficient detail to accurately determine and aggregate the usage to the appropriate jurisdiction, by ACNA
- Create/Modify call detail records for traffic segregation to the appropriate service and jurisdiction
- Record and accumulate usage data
- Analyze usage data
- Calculate the factors
- Report the factors
- Maintain sufficient records of the data resources utilized to determine jurisdictional factors to comply with audit verification requirements as specified in the BellSouth Tariffs and applicable contractual agreements.

6.0 Frequency of Reporting

Jurisdictional factors shall be updated on a quarterly basis during the months of January, April, July and October. These updates shall be received no later than 30

days after the first day in each of these months. These factors shall represent the actual use for the three previous ending on the last day of December, March, June and September respectively. These updates shall be provided in writing by letter or electronic mail and sent to the following address:

US Mail

BellSouth Telecommunications, Inc
2300 Northlake Centre Drive
Suite 415
Tucker, GA 30084

OR

Electronic Mail

piu.reports@bellsouth.com

An e-mail will be returned indicating receipt of reports submitted by electronic mail. The recommended format for updates is via the online form *RF-3995 Jurisdictional Factor Report* (see http://www.interconnection.bellsouth.com/forms/index.html, CLEC Forms Online or Interexchange Carrier Webforms).

In those instances where BellSouth has sufficient information to calculate jurisdictional factors for itself, BellSouth will notify the carrier, by letter or email, of the factors that will be used in billing, as well as the effective date. Unless otherwise notified, BellSouth will continue to update the specific identified factor(s) for subsequent quarters per the above schedule and the carrier will be exempt from further responsibility to report those specific factors.

In the event the customer does not provide a projected jurisdictional factor(s) and BellSouth does not have sufficient information to develop the jurisdictional factor(s) then BellSouth may utilize the most recent audit results if an audit has been performed, the jurisdictional factor(s) provided with the initial order for service or a default value.

7.0 Audits

7.1. Audit Request

If BellSouth disputes a PIU factor provided by a carrier and BellSouth does not have sufficient information to calculate a PIU, BellSouth may initiate negotiations with the carrier in order to reconcile the factor differences and attempt to determine the correct PIU factor.

If negotiations are attempted and are not successful in producing an agreed PIU factor, BellSouth has the option per its access tariffs to initiate an independent, third party audit of the carrier's PIU factors and the process utilized in the development of PIU factors.

Upon 30 days written notice, BellSouth may initiate an audit to ensure proper billing of traffic. The audit will be performed by:

- An independent auditor under contract to BellSouth
- A mutually acceptable independent auditor paid for by BellSouth
- Or an independent auditor selected and paid for by the carrier

Call detail records from which the PIU can be ascertained shall be retained for a minimum of 6 months. The call detail records will be made available for inspection at an agreed upon location during normal business hours. If requested data is not provided within 30 days of the notice, the carrier shall be in violation of the Tariff. BellSouth will not submit more than one audit request per calendar year.

7.2. Audit Compliance

The factor shall be adjusted based upon the audit results. The audited factor shall be applied to the usage for the quarter the audit was completed, the quarter prior to the audit, and the two quarters following the completion of the audit. If the audited factor has a variance of 20% or more from the factor reported factor, the carrier shall reimburse BellSouth for the cost of the audit if the audit was paid for by BellSouth.

Two quarters after the quarter in which the audit was completed, the carrier may report a revised factor. If the revised factor denotes a deviation of 5% or more from the audited factor and the carrier is not able to justify this deviation to BellSouth's satisfaction, BellSouth has the option of requesting another audit.

The carrier may contest the audit within 30 days from the date the audit report has been furnished to the carrier.

8.0 Ordering

As stated in 3.1 preceding, BellSouth jurisdictional shall be provided with the initial request for each service in each state and quarterly thereafter. Factors for the initial request shall be reported via *RF-3995 Jurisdictional Factor Report* which is located at http://www.interconnection.bellsouth.com/forms/index.html, CLEC Forms Online or Interexchange Carrier Webforms. Failure to provide the appropriate factors with the initial request may result in delay of service. In the event that service is provided and the appropriate factors have not been received, a default factor may be used.

Attachment 4

Collocation

COLLOCATION

1. Scope of Attachment

1.1 The rates, terms, and conditions contained within this Attachment shall only apply when KMC III is collocated as a sole occupant or as a Host within a BellSouth premises location pursuant to this Attachment. BellSouth premises include BellSouth Central Offices and Serving Wire Centers; all buildings or similar structures owned, leased, or otherwise controlled by BellSouth that house its network facilities; all structures that house BellSouth facilities on public rights-of-ways, including but not limited to vaults containing loop concentrators or similar structures; and all land owned, leased, or otherwise controlled by BellSouth that is adjacent to BellSouth's Central Offices, Serving Wire Centers, buildings and structures (hereinafter "Premises"). BellSouth Remote Site Locations (Remote Site Locations) include cabinets, huts and controlled environmental vaults owned or leased by BellSouth that house BellSouth Network Facilities. If the Premises occupied by BellSouth is leased by BellSouth from a third party or otherwise controlled by a third party, special considerations and/or intervals may apply in addition to the terms and conditions contained in this Attachment. BellSouth will inform KMC III if a Premises is leased when special considerations and/or intervals may be applicable.

1.2 If BellSouth provides collocation to other telecommunications carriers, or to a BellSouth Affiliate, BellSouth will provide the same collocation to KMC III at rates, terms and conditions no less favorable to KMC III than those provided by BellSouth to other telecommunications carriers, or to a BellSouth Affiliate.

1.3 Right to Occupy. BellSouth shall offer to KMC III collocation on rates, terms, and conditions that are just, reasonable, non-discriminatory and in full compliance with the rules and orders of the FCC and the Commission. Subject to the rates, terms and conditions of this Attachment, where space is available and it is technically feasible, BellSouth will allow KMC III to occupy a certain area designated by BellSouth within a Premises or on BellSouth property upon which the Premises is located of a size which is specified by KMC III and agreed to by BellSouth (hereinafter "Collocation Space", or "Remote Site Collocation Space"). To the extent not contained herein, the necessary rates, terms and conditions for collocation at Premises, as defined by the FCC above, shall be negotiated upon reasonable request for collocation at such Premises.

1.4 Space Reservation.

1.4.1 Neither BellSouth nor any of BellSouth's Affiliates may reserve space for future use on more preferential terms than those set forth in Sections 1.4.2 and 1.4.3 below.

1.4.2 In all states other than Florida, the size, or rack/bay(s) in a Remote Site Location, specified by KMC III may contemplate a request for space sufficient to accommodate KMC III's growth within a twenty-four (24) month period.

1.4.3 In the state of Florida, the size, or rack/bay(s) in a Remote Site Location, specified by KMC III may contemplate a request for space sufficient to accommodate KMC III's growth within an eighteen (18) month period.

1.5 Space Allocation. BellSouth shall use best efforts to accommodate KMC III's requested preferences, if any, including the provision of contiguous space for any subsequent request for collocation. In allocating Collocation Space, BellSouth shall not (a) materially increase KMC III's cost or materially delay KMC III's occupation and use of the Collocation Space**,** (b) assign Collocation Space that will impair the quality of service or otherwise limit the service KMC III wishes to offer, (c) reduce unreasonably the total space available for physical collocation at a Premise, or preclude unreasonably physical collocation within the Premises**.** Consistent with the foregoing, BellSouth shall assign KMC III collocation space within Premises that utilizes existing infrastructure (e.g., HVAC, lighting and available power), if such space is available for collocation. Space shall not be available for collocation if it is: (a) physically occupied by non-obsolete equipment; (b) assigned to another collocated telecommunications carrier; (c) used to provide physical access to occupied space; (d) used to enable technicians to work on equipment located within occupied space; (e) properly reserved for future use, either by BellSouth or another collocated telecommunications carrier; or (f) essential for the administration and proper functioning of Premises. BellSouth may segregate Collocation Space and require separate entrances for collocated telecommunications carriers to access their Collocation Space, pursuant to FCC Rules.

1.6 Space Reclamation. In the event of space exhaust within a Premises, BellSouth may include in its documentation for the Petition for Waiver filed with the Commission, any unutilized space in the Premises. KMC III will be responsible for the justification of unutilized space within its Collocation Space, if the Commission requires such justification.

1.7 Virtual Collocation Space Reservation. BellSouth shall relinquish any space held for future use before denying a request for virtual collocation on the grounds of space limitations, unless BellSouth proves to the Commission that virtual collocation at that point is not technically feasible**.**

1.8 Use of Space. KMC III shall use the Collocation Space for the purposes of installing, maintaining and operating KMC III's equipment (to include testing and monitoring equipment) necessary for interconnection or for accessing unbundled network elements in accordance with the Act and FCC and Commission rules.

1.9 The Parties agree to comply with all applicable federal, state, county, local and administrative laws, rules, ordinances, regulations and codes in the performance of their obligations.

1.10 Service Coordination. The Parties shall coordinate, where necessary, to ensure that the Collocation Space is provisioned in accordance with the specifications submitted by KMC III in its Application, as affirmed by the Bona Fide Firm Order (BFFO) or as jointly amended thereafter. BellSouth will provide the necessary infrastructure to support KMC III's request(s) pursuant to this Agreement.

2. Space Availability Report

2.1 Upon request from KMC III and at the KMC III's expense, BellSouth will provide a written report (Space Availability Report) describing in detail the space that is available for collocation at a particular Premises. This report will include the amount of Collocation Space available at the Premises requested, the number of collocators present at the Premises, any modifications in the use of the space since the last report on the Premises requested and the measures BellSouth is taking to make additional space available for collocation arrangements. A Space Availability Report does not reserve space at the Premises for which the Space Availability Report was requested by KMC III.

2.1.1 The request from KMC III for a Space Availability Report must be in writing and include the Premises street address, as identified in the Local Exchange Routing Guide (LERG) and Common Language Location Identification (CLLI) code of the Premises. CLLI code information is located in the National Exchange Carrier Association (NECA) Tariff FCC No. 4.

2.1.1.1 If KMC III is unable to obtain the CLLI code for the Remote Site Location from, for example, a site visit to the remote site, KMC III may request the CLLI code from BellSouth. To obtain a CLLI code for a Remote Site Location directly from BellSouth, KMC III should submit to BellSouth a Remote Site Interconnection Request (the Request) for the Serving Wire Center CLLI code prior to submitting its request for a Space Availability Report. KMC III should complete all the requested information and submit the Request to BellSouth. BellSouth will bill the applicable fee as set forth in Exhibit B.

2.1.2 BellSouth will respond to a request for a Space Availability Report for a particular Premises within ten (10) days of the receipt of such a request. If BellSouth cannot meet the ten (10) day response time, BellSouth shall notify KMC III and inform KMC III of the timeframe under which it can respond.

2.2 Remote Site Information. Upon written request, BellSouth will provide KMC III with the following information concerning BellSouth's remote sites: (i) the address of the remote site; (ii) the CLLI code of the remote site; (iii) the carrier serving area of the remote site; (iv) the designation of which remote sites subtend a particular central office; and (v) the number and address of customers that are served by a particular remote site.

2.3 BellSouth will provide this information on a first come, first served basis within thirty (30) days of KMC III's request subject to the following conditions: (i) the information will only be provided on a CD in the same format in which it appears in BellSouth's systems; (ii) the information will only be provided for each serving wire center designated by KMC III, up to a maximum of thirty (30) wire centers per KMC III request per month per state, and up to a maximum of one hundred twenty (120) wire centers total per month per state for all CLECs; and (iii) KMC III agrees to pay the cost as set forth in Exhibit B.

3. Collocation Options

3.1 Cageless. BellSouth shall allow KMC III to collocate KMC III's equipment and facilities without requiring the construction of a cage or similar structure. BellSouth shall allow KMC III to have direct access to KMC III's equipment and facilities in accordance with Section 5.19 below. BellSouth shall make cageless collocation available in single rack/ bay increments. Except where KMC III's equipment requires special technical considerations (e.g., special cable racking or isolated ground plane), BellSouth shall assign cageless Collocation Space in conventional equipment rack lineups where feasible. For equipment requiring special technical considerations, KMC III must provide the equipment layout, including spatial dimensions for such equipment pursuant to generic requirements contained in Telcordia GR-63-Core, and shall be responsible for compliance with all special technical requirements associated with such equipment.

3.2 Caged. BellSouth will make caged collocation available in fifty (50) square foot increments, which should be sufficient enough, to collocate a single rack/bay of equipment. At KMC III's expense, KMC III will arrange with a Supplier certified by BellSouth (BellSouth Certified Supplier) to construct a collocation arrangement enclosure in accordance with BellSouth's reasonable and nondiscriminatory Technical References (TRs) (Specifications), where technically feasible as that term has been defined by the FCC, prior to starting equipment installation. BellSouth will provide Specifications to its BellSouth Certified Suppliers. Where local building codes require enclosure specifications more stringent than BellSouth's enclosure Specifications, KMC III and KMC III's BellSouth Certified Supplier must comply with the more stringent local building code requirements. KMC III's BellSouth Certified Supplier shall be responsible for filing and receiving any and all necessary permits and/or licenses for such construction. BellSouth shall cooperate with KMC III and provide, at KMC III's expense, the documentation, including existing building architectural drawings, enclosure drawings, and Specifications required and necessary for KMC III's BellSouth Certified Supplier to obtain the zoning, permits and/or other licenses. KMC III's BellSouth Certified Supplier shall bill KMC III directly for all work performed for KMC III pursuant to this Attachment. BellSouth shall have no liability for, nor responsibility to pay, such charges imposed by KMC III's BellSouth Certified Supplier. Upon request, BellSouth shall construct the enclosure for KMC III.

3.2.1 BellSouth may elect to review KMC III's plans and specifications prior to allowing construction to start, to ensure compliance with BellSouth's Specifications. BellSouth will notify KMC III of its desire to execute this review in BellSouth's response to the Initial Application, if KMC III has indicated its desire to construct its own enclosure. If KMC III's Initial Application does not indicate its desire to construct its own enclosure, but its subsequent firm order does indicate its desire to construct its own enclosure, then notification to review will be given within ten (10) days after the Firm Order date. BellSouth shall complete its review within fifteen (15) days after the receipt of KMC III's plans and specifications. Regardless of whether or not BellSouth elects to review KMC III's plans and specifications, BellSouth reserves the right to inspect the enclosure after construction has been completed to ensure that it is constructed according to KMC III's submitted plans and specifications and/or BellSouth's Specifications, as applicable. If BellSouth decides to inspect the constructed Collocation Space, BellSouth will complete its inspection within fifteen (15) days after receipt of written notification of completion of the enclosure from KMC III. BellSouth may require KMC III to remove or correct within seven (7) days, at KMC III's expense, any structure that materially deviates fromKMC III's plans and specifications or BellSouth's Specifications, if applicable**.** If KMC III requests BellSouth to construct the enclosure or do any other work, KMC III reserves the right to inspect the enclosure or work performed by BellSouth and review any plans or specifications related to the same.

3.3 Shared Caged Collocation. KMC III may allow other telecommunications carriers to share KMC III's caged collocation arrangement, where technically feasible as that term has been defined by the FCC, pursuant to the terms and conditions agreed to by KMC III (Host) and the other telecommunications carriers (Guests) pursuant to this Section, except where the Premises is located within a leased space and BellSouth is prohibited by said lease from offering such an option to KMC III or is located on property for which BellSouth holds an easement and such easement does not permit such an option for a Remote Site Location. BellSouth shall be notified in writing by KMC III upon the execution of any agreement between the Host and its Guest(s) prior to the submission of any application. Further, such notification shall include the name of the Guest(s), the term of the agreement, and a certification by KMC III that said agreement imposes upon the Guest(s) the same terms and conditions for Collocation Space as set forth in this Attachment between BellSouth and KMC III.

3.3.1 KMC III, as the Host, shall be the sole interface and responsible Party to BellSouth for the assessment and billing of rates and charges contained within this Attachment and for the purposes of ensuring that the safety and security requirements of this Attachment are fully complied with by the Guest(s), its employees and agents. BellSouth shall provide KMC III with a pro-ration of the costs of the Collocation Space based on the number of collocators and the space used by each. BellSouth will not allocate less than one (1) rack/bay per Host/Guest. In those instances where the Host permits a Guest to use a shelf within the Host's bay within a Remote Site Location, BellSouth will not prorate the cost of the bay. In all other states than Florida, and in addition to the above, KMC III shall be the responsible party to

BellSouth for the purpose of submitting applications for initial and additional equipment placement for the Guest(s). In Florida, the Guest(s) may submit its own initial and additional equipment placement applications using the Host's Access Carrier Name Abbreviation (ACNA), provided that Guest secures permission from KMC III to use KMC III's ACNA and password. A separate Guest application shall result in the assessment of a Remote Site Application Fee, an Initial Application Fee or a Subsequent Application Fee, as set forth in Exhibit B, which will be billed to the Host on the date that BellSouth provides its written response to the Guest(s) Bona Fide Application (Application Response).

3.3.2 Notwithstanding the foregoing, the Guest(s) may submit service orders directly to BellSouth to request the provisioning of interconnecting facilities between BellSouth and the Guest(s), the provisioning of services, and access to unbundled network elements. The bill for these interconnecting facilities, services and access to UNEs will be charged to the Guest(s) pursuant to the applicable Tariff or the Guest's Interconnection Agreement with BellSouth.

3.3.3 KMC III shall indemnify and hold harmless BellSouth from any and all claims, actions, causes of action, of whatever kind or nature arising out of the presence of KMC III's Guest(s) in the Collocation Space, except to the extent caused by BellSouth's, its employees' or agents' negligence, gross negligence, or willful misconduct.

3.3.4 In making shared caged arrangements available, whether or not KMC III serves as Host, BellSouth may not increase the cost of site preparation or nonrecurring charges above the cost of provisioning such a shared arrangement of similar dimensions and material to a single collocating party.

3.4 Shared Remote Site Cageless Collocation. Subject to the requirements set forth in Section 3.3 above, to the extent BellSouth is permitted to offer shared collocation at Remote Site locations by property or easement owners, BellSouth will permit shared cageless collocation at such locations, where technically feasible, and space is available.

3.5 Adjacent Collocation. Subject to technical feasibility and space availability, BellSouth will permit an adjacent collocation arrangement (Adjacent Arrangement) on Premises' property only when space within the Premises is legitimately exhausted and where the Adjacent Arrangement does not interfere with access to existing or planned structures or facilities on the Premises' property. An Adjacent Arrangement shall be constructed or procured by KMC III and must be in conformance with reasonable and nondiscriminatory provisions of BellSouth's design and construction Specifications. Further, KMC III shall construct, procure, maintain and operate said Adjacent Arrangement(s) pursuant to all of the applicable rates**,** terms and conditions set forth in this Attachment. Additional rates, where applicable, shall be negotiated at the time of the application for the Remote Site Adjacent Arrangement.

3.5.1 If KMC III requests Adjacent Collocation, pursuant to the conditions stated in Section 3.5 above, KMC III must arrange with a BellSouth Certified Supplier to construct the Adjacent Arrangement structure in accordance with BellSouth's Specifications. BellSouth will provide Specifications upon request. Where local building codes require enclosure specifications more stringent than BellSouth's Specifications, KMC III and KMC III's BellSouth Certified Supplier must comply with the more stringent local building code requirements. KMC III's BellSouth Certified Supplier shall be responsible for filing and receiving any and all necessary zoning, permits and/or licenses for such construction. KMC III's BellSouth Certified Supplier shall bill KMC III directly for all work performed for KMC III pursuant to this Attachment. BellSouth shall have no liability for, nor responsibility to pay, such charges imposed by KMC III's BellSouth Certified Supplier.

3.5.2 KMC III must submit its Adjacent Arrangement construction plans and specifications to BellSouth when it places its Firm Order. BellSouth shall review KMC III's plans and specifications prior to construction of an Adjacent Arrangement(s) to ensure KMC III's compliance with BellSouth's Specifications. BellSouth shall complete its review within fifteen (15) days after receipt of the plans and specifications from KMC III for the Adjacent Arrangement. BellSouth may inspect the Adjacent Arrangement during and after construction is completed to ensure that it is constructed according to KMC III's submitted plans and specifications. If BellSouth decides to inspect the completed Adjacent Arrangement, BellSouth will complete its inspection within fifteen (15) days after receipt of written notification of completion of the enclosure from KMC III. BellSouth may require KMC III to remove or correct within seven (7) days at KMC III's expense, any structure that materially deviates from its submitted plans and specifications or BellSouth's Specifications, if applicable.

3.5.3 KMC III shall provide a concrete pad, the structure housing the arrangement, heating/ventilation/air conditioning (HVAC), lighting, and all of the facilities that are required to connect the structure (i.e., racking, conduits, etc.) to the BellSouth point of demarcation. At KMC III's option, and where the local authority having jurisdiction permits, BellSouth shall provide an AC power source and access to physical collocation services and facilities, subject to the same nondiscriminatory requirements as those applicable to any other physical collocation arrangement. In Alabama and Louisiana, BellSouth will provide DC power, to Adjacent Collocation sites where technically feasible, as that term has been defined by the FCC subject to individual case basis pricing that complies with the pricing standards of Sections 251 and 252 of the Act. KMC III's BellSouth Certified Supplier shall be responsible, at KMC III's sole expense, for filing and receiving any and all necessary zoning, permits and/or licenses for an Adjacent Arrangement. BellSouth shall allow shared use of the Adjacent Arrangement pursuant to the terms and conditions set forth in Section 3.4 above.

3.5.4 In the event that interior space in a BellSouth Premises becomes available, and subject to the provisions of Section 6.6 below, KMC III may, at its option, relocate its

equipment from an adjacent facility into the interior space subject to the rates, terms and conditions of this Attachment 4.

3.6 Other Physical Collocation Arrangements. BellSouth will provide other collocation arrangements that have been demonstrated to be technically feasible. A previously successful method of obtaining interconnection or access to unbundled network elements at a particular premises or point on any incumbent LEC's network is substantial evidence that such method is technically feasible in the case of substantially similar network premises or points. In seeking a particular collocation arrangement, either physical or virtual, KMC III, is entitled to a presumption that such arrangement is technically feasible if any LEC has deployed such collocation arrangement in any incumbent LEC premises.

3.7 Virtual Collocation. Virtual Collocation will be made available according to the terms and conditions described in BellSouth's FCC Tariff No. 1 for all states except Florida, which will be made available pursuant to the terms and conditions contained in the Florida Access Services Tariff. BellSouth shall provide Virtual Collocation at the rates set forth in Exhibit B. If there are any inconsistencies between BellSouth's FCC Tariff No. 1 or the Florida Access Services Tariff, and this Agreement, the rates, terms, and conditions of this Agreement shall control.

3.7.1 Virtual Collocation would occur when KMC III provides and leases to BellSouth its transmission and other collocation equipment dedicated to KMC III's use. KMC III will be responsible for monitoring and controlling KMC III's circuits terminating at BellSouth's Premises. Once space preparation is complete, and upon KMC III's request, KMC III shall contract with a BellSouth Certified Supplier to install all equipment and facilities in accordance with BellSouth's guidelines and Specifications. KMC III shall be responsible for all costs of the BellSouth Certified Supplier's installation of KMC III's virtual collocation arrangement. KMC III shall be responsible for all engineering associated with the installation and the provision of the equipment, necessary supplies and related documentation related to provisioning KMC III's virtual collocation space. BellSouth will maintain and repair such equipment under the same intervals and with the same or better failure rates for performance of similar functions for comparable BellSouth equipment. Maintenance may include the change out of electronic cards provided by KMC III.

3.7.2 KMC III may purchase the equipment from a third party, and is not required to purchase the equipment from BellSouth.

3.7.3 BellSouth will make available digital, analog and fiber cross connects for Virtual Collocation at the rates contained in Exhibit B.

3.8 Remote Site Collocation. Remote Site Collocation is the placement of KMC III owned facilities and equipment in BellSouth remote sites. Equipment ownership, maintenance and insurance are the responsibility of the KMC III or their approved

agent. The minimum amount of a Remote Site Collocation arrangement is one (1) bay/rack.

3.8.1 For equipment requiring special technical considerations, KMC III must provide the equipment layout, including spatial dimensions for such equipment pursuant to the generic requirements contained in Telcordia GR-63-Core, and shall be responsible for compliance with all special technical requirements associated with such equipment pursuant to Sections 3.8.2 and 3.8.3 below.

3.8.2 KMC III may elect to connect to a feeder line by submitting a service inquiry for that UNE to the Complex Resale Support Group (CRSG), as follows:

3.8.2.1 Connection to a BellSouth feeder line (when technically feasible) is achieved via cross connects located near the BellSouth equipment inside the Remote Site Location. In this case, the point of demarcation is the DSX (Digital System Cross Connect), feeder distribution interface, or LGX (Light Guide Cross Connect) panel in the Remote Site Location.

3.8.2.2 Connection of the KMC III owned or leased entrance facilities into the Remote Site Collocation Space from KMC III's own point of presence is permitted. However, BellSouth will designate the point of entrance at the Remote Site location housing the collocation space, so that it is physically accessible to both Parties.

3.8.3 Distribution lines will be accessed through KMC III's provision of a copper cable through a conduit from the Remote Site collocation space to the feeder distribution interface of sufficient length for splicing. BellSouth will splice this cable to the distribution cable at the feeder distribution interface in eight (8) pair increments.

3.8.4 Virtual Collocation in the Remote Site. Virtual Collocation provides for the placement of KMC III owned equipment and facilities in a BellSouth Remote Site. The minimum amount of space offered for a virtual collocation arrangement is one (1) rack/bay. BellSouth will lease KMC III's entrance fiber or cable (to include copper) cabling and equipment for the nominal fee of one dollar. KMC III's certified supplier will install the equipment in the rack/bay. BellSouth will then be responsible for performing all installation, maintenance and repair of the Virtual in the Remote Site plug-ins, when KMC III requests such work via a Service Order or Maintenance ticket.

3.9 Cross Connect. A cross-connect purchased pursuant to this Attachment shall connect the demarcation point associated with KMC III's collocation arrangement to the UNEs purchased by KMC III pursuant to Attachment 2 of this Agreement hereof or the interconnection facilities purchased by KMC III pursuant to Attachment 3 of this Agreement hereof.

3.10 Co-Carrier Cross Connect (CCXC). CCXCs are cross-connects between KMC III and another collocated telecommunications carrier other than BellSouth in the same

Premises. Where technically feasible, BellSouth will permit KMC III to interconnect directly between its virtual or physical collocation arrangements and those of another collocated telecommunications carrier within the same Premises via CCXCs and the associated cabling necessary to complete the interconnection consistent with 47 C.F.R. § 51.323. Both KMC III's agreement and the other collocated telecommunications carrier's agreement must contain rates, terms and conditions for CCXCs. BellSouth applicable charges will be imposed on the requesting telecommunications carrier. KMC III is prohibited from using the Collocation Space for the sole or primary purpose of cross connecting to other collocated telecommunications carriers.

3.10.1 KMC IIImay provision the CCXC using its own technicians**,** if certified as a BellSouth Certified Supplier, or contract with a BellSouth Certified Supplier to place the CCXC. The CCXC shall be provisioned through facilities owned or leased by KMC III. Such connections to other collocated telecommunications carriers may be made using either optical or electrical facilities (lit or dark). In cases where KMC III's equipment and the equipment of the other collocated telecommunications carrier are located in contiguous caged Collocation Spaces, KMC III may use its own technicians to install CCXCs using either electrical or optical facilities (and associated patch cords, jumper cables, tie-pairs, etc.) between the equipment of both collocated telecommunication carriers and construct a dedicated cable support structure, if needed, between the two (2) contiguous cages.KMC III shall deploy such optical or electrical connections directly between its own facilities and the facilities of another collocated telecommunications carrier without being routed through BellSouth's equipment. KMC III shall not provision CCXC on any BellSouth distribution frame, POT (Point of Termination) Bay, DSX, or LGX. KMC III is responsible for ensuring the integrity of the signal.

3.10.2 The CCXC fees provided for in this Agreement shall not apply when BellSouth has installed fiber or copper/coax cable support structure, pursuant to the terms and conditions of previous interconnection agreements between the Parties, that has been paid in full by KMC III via nonrecurring CCXC charges. If KMC III has ordered a service that originates from its collocation space and terminates to another collocator's space in the same BellSouth Premises, which caused a BellSouth technician to jumper the two (2) collocation spaces together using KMC III specific connecting facility assignments (CFAs) provided by KMC III and the other collocator at a BellSouth frame, panel or existing POT bay (wherever the point of demarcation resides), then BellSouth will permit these cross-connections to remain in service as provisioned and at the rates at which they were provisioned (grandfathered).

3.10.3 KMC III shall be responsible for providing a letter of authorization (LOA), with the application, to BellSouth from the other collocated telecommunications carrier to which it will be cross-connecting. KMC III provisioned CCXC shall utilize common cable support structure. There will be a recurring charge per linear foot, per cable, of common cable support structure used. In the case of two (2) contiguous caged collocation arrangements, KMC III may use its own technicians to construct the dedicated support structure between the two (2) collocation arrangements.

3.10.4 To request or self-provision CCXCs, KMC III must submit a Remote Site Application, an Initial Application or Subsequent Application to BellSouth. If no modification to the Collocation Space is requested other than the placement of CCXCs, the Co-Carrier Cross Connect/Direct Connect Only Application Fee for CCXCs, as set forth in Exhibit B, will apply. If modifications, in addition to the placement of CCXCs, are requested, the Initial Application or Subsequent Application Fee will apply as appropriate. BellSouth will bill this nonrecurring fee on the date that it provides an Application Response to KMC III**.** If the CCXC is requested as part of an Initial Application, only the Initial Application Fee shall apply, plus any other applicable charges.

3.10.5 If requested by KMC III, BellSouth will provision additional cable racking, if insufficient capacity is available to support KMC III's request to provision a CCXC itself.

3.11 Direct Connect (DC). BellSouth will permit KMC III to interconnect directly between KMC III's virtual and/or physical collocation arrangements within the same Premises by utilizing a DC. KMC III must use a BellSouth Certified Supplier to place the DC. The DC shall be provisioned through facilities owned by KMC III. In those cases where KMC III's virtual and/or physical collocation space is contiguous in the central office, KMC III will have the option of using KMC III's own technicians to deploy DC's using either electrical or optical facilities between the collocation spaces and constructing its own dedicated cable support structure. KMC III will deploy such optical or electrical connections directly between its own facilities without being routed through BellSouth equipment. KMC III may not self-provision DC's on any BellSouth distribution frame, POT, DSX or LGX.

3.11.1 KMC III is responsible for ensuring the integrity of the signal. KMC III-provisioned DC's shall utilize common cable support structure. There will be a recurring charge per linear foot, and a nonrecurring charge per cable, of the actual common cable support structure used. In the case of two (2) contiguous collocation arrangements, KMC III will have the option of using KMC III's own technicians to construct its own dedicated support structure.

3.11.2 To request or self-provision DCs, KMC III must submit an Initial Application or Subsequent Application. If no modification to the Collocation Space is requested other than the placement of DC's, the Co-Carrier Cross Connect/Direct Connect Only Application Fee for DC, as defined in Exhibit B, will apply. If modifications in addition to the placement of DC's are requested, the Initial Application or Subsequent Application Fee will apply. This nonrecurring fee will be billed by BellSouth on the date that BellSouth provides an Application Response.

4. Occupancy

4.1 Space Ready Date. BellSouth will notify KMC III in writing when the Collocation Space is ready for occupancy (Space Ready Date).

4.2 Acceptance Walkthrough. KMC III will schedule and complete an acceptance walkthrough of the Collocation Space with BellSouth within fifteen (15) days of the Space Ready Date. BellSouth will correct any deviations from KMC III's original or jointly amended application requirements within seven (7) days after the walkthrough, unless the Parties jointly agree upon a different time frame or mutually agree to accept the deviations. BellSouth will notify KMC III of a new Space Ready Date upon resolution of any deviations that require correction. Another acceptance walkthrough will then be scheduled and conducted within fifteen (15) days of the new Space Ready Date. This follow-up acceptance walkthrough will be limited to only those items identified in the initial walkthrough. This process will continue until the Space Acceptance Date as defined below in Section 4.3 following. KMC III must notify BellSouth in writing that collocation equipment installation is complete and operational with BellSouth's network**.**

4.3 Space Acceptance Date. If KMC III completes its acceptance walkthrough within the fifteen (15) day interval, the date of KMC III's acceptance of the Collocation Space, as indicated by KMC III's execution of a Space Acceptance Form, will be the Space Acceptance Date (Space Acceptance Date).

4.3.1 In the event that KMC III fails to complete an acceptance walkthrough within this fifteen (15) day interval, the Collocation Space shall be deemed accepted by KMC III on the Space Ready Date and the Space Acceptance Date will be established as the same date, provided that BellSouth has complied with all space preparation, provisions of KMC III's BFFO, and that all required of BellSouth is complete.

4.3.2 If KMC III decides to occupy the space prior to the Space Ready Date, the date KMC III occupies the space will be deemed the Space Acceptance Date.

4.4 Termination of Occupancy. In addition to any other provisions addressing termination of occupancy in this Agreement KMC III may terminate occupancy in a particular Collocation Space by submitting a Subsequent Application, or a Remote Site Application requesting termination of occupancy. Such termination shall be effective upon BellSouth's execution of the Space Relinquishment Form for the collocation space(s) for which KMC III seeks to terminate occupancy, which termination date shall be the same date as KMC III's date of the Space Relinquishment Form, provided KMC III has complied with all provisions of the Space Relinquishment Form. BellSouth may terminate KMC III's right to occupy the Collocation Space in the event KMC III fails to comply with any material provision directly related to Collocation in this Agreement provided BellSouth gives KMC III thirty (30) days' prior written notice of the failure to comply and gives KMC III an opportunity to cure during such period. Notwithstanding the above, any termination for non-payment of applicable fees shall be in accordance with Attachment 7, Billing of this Agreement.

4.4.1 Upon termination of occupancy, KMC III, at its sole expense, shall remove its equipment and any other property from the Collocation Space. KMC III shall have thirty (30) days (Removal Date) from the Subsequent Application BFFO Date to complete such removal, including the removal of all equipment and facilities of KMC III's Guest(s), unless KMC III's Guest(s) has assumed responsibility for the Collocation Space housing the Guest(s)'s equipment, pursuant to the Commissions' space exhaust requirements and executed the appropriate documentation required by BellSouth prior to the KMC III Removal Date.

4.4.2 Should KMC III or KMC III's Guest(s) fail to vacate the Collocation Space by the Removal Date, BellSouth shall have the right to remove the equipment and dispose of the equipment and other property of KMC III or KMC III's Guest(s), in any commercially reasonable manner that BellSouth deems fit, at KMC III's expense and with no liability whatsoever for KMC III's property or KMC III's Guest(s)'s property**,** provided that BellSouth has not granted KMC III's request for an extension of the Removal Date, and such request shall not unreasonably be denied.

4.4.3 Upon termination of KMC III's right to occupy specific Collocation Space, the Collocation Space will revert back to BellSouth's space inventory, and KMC III shall surrender the Collocation Space to BellSouth in the same condition as when it was first occupied by KMC III, with the exception of ordinary wear and tear, unless otherwise agreed to by the Parties. KMC III's BellSouth Certified Supplier shall be responsible for updating and making any necessary changes to BellSouth's records as required by BellSouth's Specifications including, but not limited to, Central Office Record Drawings and ERMA Records. KMC III shall be responsible for the cost of removing any KMC III constructed enclosure, together with any supporting structures (e.g., racking, conduits or power cables), at the termination of occupancy and restoring grounds to their original condition.

5. Use of Collocation Space

5.1 Equipment Type. BellSouth shall permit the collocation and use of any equipment necessary for interconnection or access to unbundled network elements, in accordance with the applicable FCC and Commission rules and orders**.** Equipment is necessary for interconnection if an inability to deploy that equipment would, as practical, economic, or operational matter, preclude the requesting carrier from obtaining interconnection with BellSouth at a level equal in quality to that which BellSouth obtains within its own network or what BellSouth provides to any Affiliate, subsidiary, or other party.

5.2 Equipment is necessary for access to an unbundled network element if an inability to deploy that equipment would, as a practical, economic, or operational matter, preclude the requesting carrier from obtaining nondiscriminatory access to that unbundled network element, including any of its features, functions, or capabilities.

5.3 Multi-functional equipment shall be deemed necessary for interconnection or access to an unbundled network element if and only if the primary purpose and function of the

equipment, as the requesting carrier seeks to deploy it, meets either or both of the standards set forth above in Sections 5.1 and 5.2 above. For a piece of equipment to be utilized primarily to obtain equal in quality interconnection or nondiscriminatory access to one or more unbundled network elements, there also must be a logical nexus between the additional functions the equipment would perform and the telecommunication services KMC III seeks to provide to its customers by means of the interconnection or unbundled network element. The collocation of those functions of the equipment that, as stand-alone functions, do not meet either of the standards set forth above in Sections 5.1 and 5.2 above must not cause the equipment to significantly increase the burden on BellSouth's property. Such equipment necessary for interconnection or access to unbundled network elements shall include, but is not limited to transmission equipment, equipment to light dark fiber, optical terminating equipment and multiplexers, digital subscriber line access multiplexers, routers, asynchronous transfer mode multiplexers, multifunction equipment, remote switching modules, fiber distribution frames, splitters, concentrators, cross-connect systems, switching equipment other than traditional circuit switches, and ancillary equipment that enables a requesting carrier to assure proper provisioning and functioning of other collocated equipment. Subject to the provisions of this Section, KMC III may order BellSouth tariffed services that connect to such equipment in its Collocation Space.

5.3.1 Examples of equipment that would not be considered necessary include, but are not limited to: traditional circuit switching equipment, equipment used exclusively for call related databases, computer servers used exclusively for providing information services, operations support system (OSS) equipment used to support collocated telecommunications carrier network operations, equipment that generates customer orders, manages trouble tickets or inventory, or stores customer records in centralized databases, etc. BellSouth will determine upon receipt of an application if the requested equipment is necessary based on the criteria established by the FCC. Multifunctional equipment placed on Premises must not place any greater relative burden on BellSouth's property than comparable single function equipment. BellSouth may object to the collocation of equipment based on criteria and in accordance with procedures and limitations established by applicable FCC and Commission rules and orders. With the exception of the equipment set forth in this Section 5.3.1, BellSouth may not block collocation and use of equipment while a proceeding to determine whether BellSouth may block such placement is pending. If BellSouth prevails in such a proceeding, KMC III will remove such equipment from the collocation, within thirty (30) days of receipt of a written request to do so from BellSouth, or as otherwise set forth in the relevant Commission order.

5.4 Whenever BellSouth objects to collocation of equipment by KMC III for purposes within the scope of Section 251(c)(6) of the Act, BellSouth shall prove to the state commission that the equipment is not necessary for interconnection or access to unbundled network elements under the standards set forth above in this Section. BellSouth may not object to the collocation of equipment on the grounds that the equipment does not comply with safety or engineering standards that are more stringent than the safety or engineering standards that BellSouth applies to its own

equipment. BellSouth may not object to the collocation of equipment on the ground that the equipment fails to comply with Network Equipment and Building Specifications performance standards or any other performance standards. Collocated equipment must comply with the following Telcordia Network Equipment Building Systems (NEBS) General Equipment Requirements: Criteria Level 1 requirements as outlined in Telcordia Special Report SR-3580, Issue 1. If BellSouth denies collocation of KMC III's equipment, citing safety standards, BellSouth must provide to KMC III within five (5) business days of the denial a list of all equipment that BellSouth locates at the Premises in question, together with an affidavit attesting that all of the equipment meets or exceeds the safety standard that BellSouth contends the competitor's equipment fails to meet. This affidavit must set forth in detail: the exact safety requirement that KMC III's equipment does not satisfy; BellSouth's basis for concluding that KMC III's equipment does not meet this safety requirement; and BellSouth's basis for concluding why collocation of equipment not meeting this safety requirement would compromise network safety. BellSouth reserves the right to permit on a nondiscriminatory basis collocation of equipment that does not necessarily comport with the requirements of applicable FCC and Commission rules and orders.

5.5 All KMC III Remote Site equipment installation shall comply with BellSouth TR 73503-11h, "Grounding – Engineering Procedures". Metallic cable sheaths and metallic strength members of optical fiber cables as well as the metallic cable sheaths of all copper conductor cables shall be bonded to the designated grounding bus for the Remote Site Location. All copper conducted pairs, working and non-working, shall be equipped with a solid-state protector unit (over-voltage protection only), which has been listed by a nationally recognized testing laboratory and located within KMC III's Remote Site Collocation Space.

5.6 Terminations. KMC III shall not request more DS0, DS1, DS3 and optical terminations for a collocation arrangement than the total port or termination capacity of the equipment (including, but not limited to, transmission equipment, multiplexers, DSLAMS, DLC's, signal regenerators, cross connect panels) physically installed in the arrangement. The total capacity of the equipment collocated in the arrangement will include equipment contained in the application in question as well as the transmission equipment already placed in an arrangement. If full network termination capacity of the equipment being installed is not requested in the application, additional network terminations for the installed equipment will require the submission of another application. In the event that KMC III submits an application for terminations that exceed the total capacity of the collocated equipment, KMC III will be informed of the discrepancy and will be required to submit a revision to the application. Billing for terminations begin when services are ordered to those terminations via an ASR or a LSR.

5.7 KMC III will provide a list of those entities with a security interest in collocation equipment in KMC III's collocation sites to BellSouth. This list will be updated by KMC III once annually. This information shall be expressly covered by the confidentiality provisions contained in Section 12 of the General Terms and Conditions

of this Agreement. In no event shall BellSouth use the list of entities for any purpose other than contacting equipment owners or lien holders subsequent to abandonment of such equipment by KMC III.

5.8 No Marketing. KMC III shall not use the Collocation Space for marketing purposes, nor shall it place any marketing materials outside the Collocation Space or on the grounds of the Premises.

5.9 Collocation Space/Equipment Identification. KMC III shall place a plaque on or affix other identification (e.g., stenciling) to KMC III's equipment, in order for BellSouth to identify KMC III's equipment, including a list of emergency contacts with telephone numbers. For caged collocation the identification may be placed on a plaque affixed outside of the caged enclosure. All equipment must be identified for cageless collocation.

5.10 Entrance Facilities. KMC III may elect to place KMC III-owned or KMC III-leased (from BellSouth or a third party provider) fiber entrance facilities into its Collocation Space. BellSouth will designate the point of interconnection as close as reasonably possible to the Premises building housing the Collocation Space, such as at an entrance manhole or a cable vault, which are physically accessible by both Parties. KMC III will provide and place fiber cable at the point of entrance (in the entrance manhole) of sufficient length to be pulled through conduit and into the splice location. KMC III will provide and place copper or fiber cable through conduit from the Remote Site Collocation Space to the feeder distribution interface to the splice location of sufficient length for splicing by BellSouth. In Central Offices, KMC III will provide and install a sufficient length of fire retardant riser cable, to which the entrance cable will be spliced by BellSouth. The fire retardant riser cable will extend from the splice location to KMC III's equipment in the Collocation Space. In the event KMC III utilizes a non-metallic, riser-type entrance facility, a splice will not be required. KMC III must contact BellSouth for instructions prior to placing any entrance facility cable in the manhole. KMC III is responsible for maintenance of the entrance facilities.

5.10.1 Central Office - Microwave Entrance Facilities. At KMC III's option, BellSouth will accommodate, where technically feasible, a microwave entrance facility, pursuant to separately negotiated terms and conditions.

5.10.2 Central Office -Copper and Coaxial Cable Entrance Facilities. BellSouth shall permit KMC III to use copper or coaxial cable entrance facilities, if approved by the Commission. Notwithstanding the foregoing, in the case of adjacent collocation, copper facilities may be used between the adjacent collocation arrangement and the central office demarcation point unless BellSouth determines that limited space is available for the placement of entrance facilities.

5.11 Dual Entrance Facilities. BellSouth will provide at least two (2) interconnection points at each Premise where at least two such interconnection points are available and capacity exists. Upon receipt of a request by KMC III for dual entrance facilities to its

physical Collocation Space, BellSouth shall provide KMC III with information regarding BellSouth's capacity to accommodate the requested dual entrance facilities. If conduit in the serving manhole(s) is available and is not reserved for another purpose or for utilization within twelve (12) months of the receipt of an application for collocation, BellSouth will make the requested conduit space available for installing a second entrance facility to KMC III's arrangement. The location of the serving manhole(s) will be as close as reasonably possible to the Premises housing the Collocation Space, but determined by BellSouth on a reasonable and nondiscriminatory basis. Where dual entrance facilities are not available due to lack of capacity, BellSouth will provide this information to KMC III in the Application Response**.** BellSouth shall not deny an Application for the sole reason that dual entrance facilities are not available.

5.12 Shared Use. KMC III may utilize spare capacity on an existing interconnector's entrance facility for the purpose of providing an entrance facility to KMC III's collocation arrangement within the same Premises.

5.12.1 In a Central Office, BellSouth shall allow the splice, as long as the fiber is non-working dark fiber. KMC III must arrange with BellSouth in accordance with all reasonable and nondiscriminatory requirements set forth in BellSouth's Special Construction Procedures, RL93-11-030BT, and provide a LOA from the other telecommunications carrier for BellSouth to perform the splice of the KMC III provided riser cable to the spare capacity on the entrance facility. If KMC III desires to allow another telecommunications carrier to use its entrance facilities, that telecommunications carrier must arrange with BellSouth in accordance with all reasonable and nondiscriminatory requirements set forth in BellSouth's Special Construction Procedures, RL93-11-030BT, and provide a LOA from KMC III for BellSouth to perform the splice of that telecommunications carrier's provided riser cable to the spare capacity on KMC III's entrance facility.

5.12.2 For a Remote Site, the Parties will negotiate the rates, terms and conditions based upon the technical feasibility and physical capacity at the time of a request from KMC III.

5.13 Central Office Demarcation Point. BellSouth, in a reasonable and nondiscriminatory manner and in accordance with any and all applicable FCC and Commission rules and orders, will designate the point(s) of demarcation between KMC III's equipment and/or network and BellSouth's network. Each Party will be responsible for the installation, maintenance and operation of all equipment/facilities on its side of the demarcation point and may make any terminations that may be required on their side of the demarcation point and may self-provision cross connects within the Collocation Space that may be required to activate service requests. KMC III shall have access to the demarcation point and all equipment and facilities on its side of the demarcation point**.** KMC III shall not have access to BellSouth's side of the demarcation point. When troubles cannot be clearly isolated to BellSouth's facilities and equipment, BellSouth will agree to test cooperatively with KMC III to assist in trouble isolation to

a specific Party's facilities and equipment as set forth in Section 2.3.13 of BellSouth's FCC Tariff No. 1. If KMC III performs testing of its facilities and submits a trouble ticket to BellSouth indicating a trouble exists on BellSouth's side of the demarcation, then BellSouth will perform the required testing on its side of the demarcation point to isolate the trouble reported by KMC III. If BellSouth does find that a trouble exists on its side of the demarcation point after it has performed the required testing of its facilities, then BellSouth will take the necessary action to repair its facilities to eliminate the trouble and KMC III will not be charged for submission of the trouble ticket. If BellSouth cannot locate any trouble on its side of the demarcation point, then BellSouth will assess KMC III the applicable Maintenance of Services charge as set forth in Section 13.3.1 of BellSouth's FCC Tariff No. 1, based on the amount of time, in half-hour increments, it takes a BellSouth technician to complete the appropriate testing. If, within thirty (30) days of BellSouth's billing of the Maintenance of Services charge, KMC III performs its testing of the same facilities and finds that the trouble has not been eliminated and does not reside on KMC III's side of the demarcation point, then the KMC III shall submit a second trouble ticket to BellSouth. If, after testing has been performed by BellSouth, the trouble is actually determined to be on BellSouth's side of the demarcation point, BellSouth will not charge KMC for the submission of the trouble ticket. BellSouth shall also credit KMC's account for the amount of the original Maintenance of Service charge on this same facility, within the next billing cycle. For 2-wire and 4-wire connections to BellSouth's network, the demarcation point shall be a common block on the BellSouth designated conventional distributing frame (CDF). KMC III shall be responsible for providing, and KMC III's BellSouth Certified Supplier shall be responsible for installing and properly labeling/stenciling, the common, and necessary cabling pursuant to Section 7 below. For DS1 and DS3 connections, the demarcation point shall be a BellSouth provided DSX panel, or elsewhere if mutually agreed. For fiber connections, the demarcation point shall be a BellSouth provided LGX panel, or elsewhere if mutually agreed. For DS0 connections, the demarcation point shall be a BellSouth designated distributing frame. BellSouth shall not require KMC III to use an intermediate interconnection arrangement in lieu of a direct connection to BellSouth's network if technically feasible.

5.13.1 Existing point(s) of demarcation – KMC III provided POT Bay. BellSouth will grandfather existing point(s) of demarcation established at a KMC III provided POT Bay. KMC III shall order services using the existing remaining terminations in the POT bay.

5.13.2 Existing point(s) of demarcation – BellSouth provided POT Bay. BellSouth will grandfather existing point(s) of demarcation established at a BellSouth provided POT Bay. KMC III shall order services using the existing remaining cabling and terminations in the POT Bay.

5.13.3 Irrespective of where the demarcation point in a central office is located, BellSouth shall provide KMC III with access to the KMC III's side of the demarcation point pursuant to this Section.

5.14 Remote Site Point of Demarcation. The point of demarcation will be as follows for each service level: DS-0 services will be the feeder distribution interface. DS1 services will be at the designated BellSouth DS1 cross-connect panel. DS3 services will be at the designated BellSouth DS3 cross-connect panel. Dark fiber services will be at the designated BellSouth LGX panel.

5.15 KMC III's Equipment and Facilities. KMC III, or if required by this Attachment, KMC III's BellSouth Certified Supplier, is solely responsible for the design, engineering, installation, testing, provisioning, performance, monitoring, maintenance and repair of the equipment and facilities used by KMC III and collocated in the Collocation Space or elsewhere in the Premises. Such equipment and facilities may include, but are not limited to, cable(s), equipment, and point of termination connections. KMC III need not use a BellSouth Certified Supplier to monitor, maintain or repair its own equipment and facilities.

5.16 BellSouth's Access to Enclosed Collocation Space. Except in the case of an emergency, BellSouth will not access KMC III's locked enclosure prior to notifying KMC III at least seventy-two (72) hours or three (3) business days, whichever is greater, before access to the Collocation Space is required. BellSouth retains the right to access KMC III's space for the purpose of making BellSouth equipment or cabling and building modifications (e.g., altering or removing racking, ducts, electrical wiring, HVAC, and cabling). KMC III may elect to be present whenever BellSouth performs work in the Collocation Space. The Parties agree that KMC III will not bear any of the expense associated with this type of work**.** BellSouth, its employees, vendors and agents, will comply at all times with its own security and safety procedures and requirements, while in KMC III's space.

5.16.1 In cases of emergency, BellSouth will provide oral notice of entry as soon as possible (such oral notice most likely will be after entry) and, upon request, will provide subsequent written notice containing the time of entry, cause for emergency, and a listing of personnel allowed to enter the space during said emergency.

5.17 KMC III must provide the local BellSouth Central Office building contact with two Access Keys that will allow BellSouth entry into enclosed and locked Collocation Space, including but not limited to, Adjacent Arrangements, pursuant to this Section. Access Keys may not be duplicated under any circumstances. BellSouth agrees to be responsible for all Access Keys and for the return of all Access Keys after the contractual obligation with KMC III ends, upon the termination of this Attachment, or upon the termination of occupancy of an individual collocation arrangement.

5.18 Subject to the Limitation of Liability Section in the General Terms and Conditions of this Agreement, BellSouth shall be liable for the negligent actions of its employees or agents and for any damage caused to KMC III's equipment, facilities or Collocation Space while in KMC III's Collocation Space and shall indemnify and hold harmless KMC III from any claim, liability or damages that may result from such entry into KMC III's Collocation Space by BellSouth, its agents, contractors or employees.

5.19 KMC III's Access. KMC III shall have access to its Collocation Space or Remote Site Collocation Space twenty-four (24) hours a day, seven (7) days a week. Such access will be unescorted, provided KMC III complies with the requirements set forth in Section 13 below. KMC III agrees to provide the name and social security number, date of birth, or driver's license number of each employee, supplier, or agent of KMC III or KMC III's Guests that will be provided with access keys or cards (Access Keys) prior to the issuance of said Access Keys, using form RF-2906-C, the "CLEC and CLEC Certified Supplier Access Request and Acknowledgement" form. When distributing access keys or cards, BellSouth shall provide receipt acknowledgement forms, the "Collocation Acknowledgement Sheet" for access cards and the "Key Acknowledgement Form" for keys to KMC III. These receipt acknowledgement forms must be signed by KMC III and returned to BellSouth Access Management within fifteen (15) days of KMC III's receipt of keys or cards. Failure to return these properly acknowledged forms will result in the holding of subsequent access key or card requests until the proper acknowledgement documents have been received by BellSouth. Access Keys may not be duplicated under any circumstances. KMC III agrees to be responsible for all Access Keys and for the return of all Access Keys in the possession of KMC III's employees, suppliers, Guests, or agents after termination of the employment relationship, the contractual obligation with KMC III ends, upon the termination of this Attachment, or upon the termination of occupancy of an individual collocation arrangement. The BellSouth Access Customer Advocacy Center (ACAC) emergency access contact numbers will be provided to KMC III for access related issues.

5.19.1 BellSouth will permit one accompanied site visit to KMC III's designated collocation arrangement location, after receipt of the BFFO without charge to KMC III. KMC III must submit to BellSouth the completed Access Control Request Form for all employees or agents requiring access to the Premises within a minimum of thirty (30) days prior to the date KMC III desires access to the Collocation Space or Remote Collocation Space. KMC III may submit a request for its one accompanied site visit to its designated collocation arrangement location at any time subsequent to BellSouth's receipt of the BFFO**.** BellSouth shall respond to such request within five (5) business days, and shall use best efforts to facilitate the visit on the date requested by KMC III. In the event KMC III desires access to the Collocation Space or Remote Collocation Space after submitting such a request, but prior to the approval of its access request, in addition to the first accompanied free visit, BellSouth shall permit KMC III to access the Collocation Space or Remote Collocation Space, prior to completing BellSouth's Training requirements (as set forth in Section 13 below), accompanied by a security escort, at KMC III's expense. KMC III must request escorted access to its designated collocation arrangement location at least three (3) business days prior to the date such access is desired. A security escort will be required whenever KMC III or its approved agent desires access to the entrance manhole.

5.19.2 Lost or Stolen Access Keys. The Parties shall immediately notify each other in writing in the case of lost or stolen Access Keys. If it becomes necessary for BellSouth to re-

key buildings or enclosures or deactivate a card as a result of a lost Access Key(s) or for failure to return an Access Key(s), KMC III shall pay for the costs of re-keying or deactivating the card as set forth in the rates in Exhibit B. If it becomes necessary for KMC III to re-key an enclosure due to BellSouth losing a key or if a key becomes stolen while in the possession of BellSouth, BellSouth will pay KMC III the applicable costs, as supported by documentation, to re-key an enclosure or replace lost or stolen keys that KMC III has previously provided to BellSouth.

5.20 Health Related Facilities and Parking. KMC III authorized personnel will have reasonable access to health related facilities (e.g., bathrooms, eyewash stations, shower stations, drinking water, etc. within the Premises), as well as to available parking.

5.21 Interference or Impairment. For purposes of this Section, the term "significantly degrades" shall be defined as an action that noticeably impairs a service from a user's perspective.

5.21.1 Interference or Impairment. Notwithstanding any other provisions of this Attachment, KMC III shall not use any product or service provided under this Agreement, any other service related thereto or used in combination therewith, or place or use any equipment or facilities in any manner that 1) significantly degrades, or significantly impairs from the service provider's perspective, a traditional voice band service or advanced service provided by BellSouth, or by any other entity whose service enters, is routed through or exits that Central Office; 2) endangers or damages the equipment, facilities or any other property of BellSouth or of any other entity located in the central office or on the Premises in which the Central Office is located; 3) knowingly or unlawfully compromises the privacy of any communications routed through the Premises; or 4) creates an unreasonable risk of injury or death to any individual or to the public. If BellSouth reasonably determines that any equipment or facilities of KMC III violates the provisions of this paragraph, BellSouth shall provide written notice to KMC III, which shall direct KMC III to cure the violation within forty-eight (48) hours of KMC III's actual receipt of written notice or, if such cure is not feasible, at a minimum, to commence curative measures within twenty-four (24) hours and to exercise reasonable diligence to complete such measures as soon as possible thereafter. After receipt of the notice, the Parties agree to consult immediately and, if necessary, to conduct an inspection of the arrangement. The Parties will act in good faith and in a cooperative manner to determine or isolate the source of significant degradation. Any dispute regarding the source of the risk, impairment, interference, or degradation may be resolved pursuant to the dispute resolution provisions set forth in the General Terms and Conditions of this Agreement.

5.21.2 Except in the case of the deployment of an advanced service which significantly degrades the performance of other advanced services or traditional voice band services, if KMC III fails to commence curative action within twenty-four (24) hours and exercise commercially reasonable efforts to complete such action as soon as possible or if the violation is of a character that poses an immediate and substantial

threat of physical damage to property or injury or death to any person, then and only in that event, BellSouth may take such action as it deems necessary to eliminate such threat, including, without limitation, the interruption of electrical power to KMC III's equipment which BellSouth has determined beyond a reasonable doubt is the cause of such threat. In the case of KMC III not taking action within twenty-four (24) hours and exercising commercially reasonable efforts to complete such action as soon as possible, BellSouth will provide notice to KMC III prior to, or, if made impossible due to the nature of the threat imposed, as soon as possible after the taking of such action and provided that BellSouth, its agents, contractors or employees conduct themselves in strict compliance with this Section and except to the extent that such action by BellSouth fails to comport with the requirements of this paragraph or otherwise constitutes negligence, gross negligence or willful misconduct, BellSouth shall have no liability to KMC III for any damages arising from such action. If BellSouth's right to take action pursuant to this Section results solely from KMC III's failure to take curative action or to exercise commercially reasonable efforts to complete such action as soon as possible, BellSouth shall provide notice prior to taking action under this Section. Any disputes with respect to BellSouth's right to take such action under this Section 5.21.2 shall be resolved pursuant to the dispute resolution provisions set forth in the General Terms and Conditions of this Agreement.

5.21.3 In the case of the deployment of an advanced service which significantly degrades the performance of other advanced services or traditional voice band services and KMC III fails to take curative action within forty-eight (48) hours, then BellSouth will establish before the Commission that the technology deployment is causing the significant degradation. Any claims of network harm presented to KMC III or, if subsequently necessary, the Commission must be supported by BellSouth with specific and verifiable information. When BellSouth demonstrates that a certain technology deployed by KMC III is significantly degrading the performance of other advanced services or traditional voice band services, KMC III shall discontinue deployment of that technology and migrate its customers to technologies that will not significantly degrade the performance of other such services. Where the only degraded service itself is a known disturber, and the newly deployed technology satisfies at least one of the criteria for a presumption that it is acceptable for deployment under applicable FCC and Commission rules and orders, the degraded service shall not prevail against the newly deployed technology.

5.22 Central Office Personalty and its Removal. Subject to requirements of this Attachment, KMC III may place or install in or on the Central Office Collocation Space such facilities and equipment, including storage for and spare equipment, as it deems desirable for the conduct of business, provided that such equipment is telecommunications equipment, or is desirable for the maintenance and operation of the collocated telecommunications equipment, and does not violate floor loading requirements, imposes or could impose or contains or could contain environmental conditions or hazards. Personal property, facilities and equipment placed by KMC III in the Collocation Space shall not become a part of the Collocation Space, even if nailed, screwed or otherwise fastened to the Collocation Space, but shall retain its

status as personalty and may be removed by KMC III at any time. Any damage caused to the Collocation Space by KMC III's employees, suppliers, agents or representatives during the removal of such property shall be promptly repaired by KMC III's expense.

5.23 Alterations. Under no condition shall KMC III or any person acting on behalf of KMC III make any rearrangement, modification, augment, improvement, addition, and/or other alteration which could affect in any way space, power, HVAC, and/or safety considerations to the Collocation Space or the Premises, hereinafter referred to individually or collectively as "Alterations", without the express written consent of BellSouth, which shall not be unreasonably withheld. The cost of any such Alteration shall be paid by KMC III. Any such Alteration shall require a Subsequent Application and will result in the assessment of a Remote Site Application Fee, a Subsequent Application Fee, an Administrative Only Application Fee or an Initial Application Fee as set forth in Section 6.2.1 below, and, which will be billed by BellSouth on the date that BellSouth provides KMC III with an Application Response.

5.24 Janitorial Service. KMC III shall be responsible for the general upkeep of its Collocation Space. KMC III shall arrange directly with a BellSouth Certified Supplier for janitorial services applicable to Caged Collocation Space. BellSouth shall provide a list of such suppliers on a site-specific basis, upon request.

6. Ordering and Preparation of Central Office and Remote Site Collocation Space

6.1 Initial Application. For KMC III or KMC III's Guest(s) initial equipment placement, KMC III shall submit to BellSouth a Physical Expanded Interconnection Application Document (Initial Application). The Initial Application is considered Bona Fide when it is complete and accurate, meaning that all of the required fields on the application are completed with the appropriate type of information

6.1.1 Initial Application Fee. An Application Fee, as set forth in Exhibit B, will apply to each Initial Application submitted by KMC III, and will be billed by BellSouth on the date that BellSouth provides KMC III with an Application Response.

6.2 Subsequent Application. In the event KMC III or KMC III's Guest(s) desires to modify the Collocation Space after a BFFO, KMC III shall complete an application that contains all of the detailed information associated with an Alteration to the Collocation Space, as defined in Section 5.23 above ("Subsequent Application"). The Subsequent Application is considered Bona Fide when it is complete and accurate, meaning that all of the required fields on the Subsequent Application are completed with the appropriate type of information associated with the Alteration. BellSouth shall determine what modifications, if any, to the Premises are necessary to accommodate the change requested by KMC III in the application. Such modifications to the Premises may include, but are not limited to: floor loading changes, changes necessary to meet HVAC requirements, changes to power plant requirements, equipment additions, etc.

6.2.1 Subsequent Application Fee. The application fee paid by KMC III for its request for an Alteration shall be dependent upon the level of assessment needed for the Alteration requested. Where the Subsequent Application does not require assessment for provisioning or construction work but requires administrative costs by BellSouth, an Administrative Only Application Fee will be required as set forth in Exhibit B. This Administrative Only Application Fee will be applicable in instances such as Transfer of Ownership of the Collocation Space, Removal of Equipment from the Collocation Space, where the removal requires no physical work to be done by BellSouth, modification to an application prior to BFFO and V-to-P Conversion (In Place). The fee for a Subsequent Application where the Alteration requested has limited effect (e.g., requires limited assessment but no capital expenditure by BellSouth as sufficient cable support structure, HVAC, power and terminations are available) shall be the Subsequent Application Fee as set forth in Exhibit B. If the modification requires capital expenditure, an Initial Application Fee shall apply. This nonrecurring fee will be billed on the date that BellSouth provides KMC III with an Application Response.

6.3 Remote Site Application. When KMC III or KMC III's Guest(s) desires to install a bay/rack in a Remote Site Location, KMC III shall submit to BellSouth a Physical Expanded Interconnection Application Document (Remote Site Application). The Remote Site Application is Bona Fide when it is completed and accurate, meaning that all required fields on the Remote Site Application are completed with the appropriate type of information. An application fee, as set forth in Exhibit B, will apply which will be billed on the date that BellSouth provides an Application Response. The placement of an additional bay/rack at a later date will be treated in the same fashion and a Remote Site Application will be required. The installation of additional shelves/ equipment, subject to the restrictions contained in Section 3.8 above, within an existing bay or rack does not require a Remote Site Application.

6.3.1 Availability of Space. Upon submission of an application, BellSouth will permit KMC III to physically collocate in any available full bay/rack of space, pursuant to the terms of this Attachment, at any BellSouth Remote Site Location, unless BellSouth has determined that there is no full bay/rack of space available due to space limitations after BellSouth has conducted a review of all space within the Remote Site Location or that collocation at the Remote Site Location is not practical for technical reasons. In the event space is not immediately available at a Remote Site Location, BellSouth reserves the right to make additional space available, in which case the conditions in Section 7 below shall apply, or BellSouth may elect to deny space in accordance with this Section in which case virtual or adjacent collocation options may be available. If the amount of space requested is not available, BellSouth will notify KMC III of the amount that is available.

6.4 Space Preferences. If KMC III has previously requested and received a Space Availability Report for the Premises, KMC III may submit up to three (3) space preferences on its application by identifying the specific space identification numbers referenced on the Space Availability Report for the space it is requesting. In the event

BellSouth cannot accommodate the KMC III's preference(s), KMC III may accept the space allocated by BellSouth or cancel its application, (without incurring an application fee), and submit another application requesting additional space preferences for the same central office. This application will be treated as a new application and an application fee will be billed by BellSouth on the date that BellSouth provides KMC III with an Application Response.

6.5 Space Availability Notification.

6.5.1 Unless otherwise specified, BellSouth will respond to an application within ten (10) days as to whether space is available or not available within a requested Premises. BellSouth's electronic application system will indicate when the application is Bona Fide**.** If the application cannot be Bona Fide**,** BellSouth will describe the items necessary to cause the application to become Bona Fide. If the amount of space requested is not available, BellSouth will notify KMC III of the amount of space that is available and no application fee will apply. When BellSouth's response includes an amount of space less than that requested by KMC III or space that is configured differently, no application fee will apply. If KMC III decides to accept the available space, KMC III must resubmit its application to reflect the actual space available, including the configuration of the space**.** When KMC III resubmits its application, BellSouth will bill KMC III the appropriate application fee.

6.5.2 BellSouth will respond to a Florida and Tennessee application within fifteen (15) days as to whether space is available or not available within a Premises. BellSouth's electronic application system will indicate when the application is Bona Fide. If the application cannot be Bona Fide**,** BellSouth will describe the items necessary to cause the application to become Bona Fide. If the amount of space requested is not available, BellSouth will notify KMC III of the amount of space that is available or space that may be configured differently and no application fee will apply. If KMC III decides to accept the available space, KMC III must amend its application to reflect the actual space available, including the configuration of the space, prior to submitting a BFFO.

6.5.3 Denial of Application. If BellSouth notifies KMC III that no space is available ("Denial of Application"), BellSouth will not assess an application fee to KMC III. After providing written notice to KMC III that BellSouth has no available space in the requested Premises, BellSouth will allow KMC III, upon request, to tour the entire Premises within ten (10) days of such Denial of Application**,** or as otherwise agreed to by the Parties. In order to schedule this tour, the request for the tour of the Premises must be received by BellSouth at least five (5) days prior to the tour date.

6.5.4 BellSouth's written notice of denial shall provide KMC IIIwith information relevant to the denial of its request for collocation space, and give some detail as to why the space was denied.

6.5.5 Expedited Removal of Equipment in a Space Exhaust Scenario. BellSouth shall remove obsolete unused equipment from its Premises prior to denying a request for collocation on the grounds of space limitations, unless BellSouth proves to the Commission that collocation at the point is not technically feasible.

6.5.6 BellSouth will provide virtual collocation in accordance with applicable FCC and Commission rules and orders.

6.5.7 Filing of Petition for Waiver. Upon Denial of Application, BellSouth will timely file a petition with the Commission pursuant to 47 U.S.C. § 251(c)(6). BellSouth shall provide to the Commission any information required or requested by that Commission. Such information shall include which space, if any BellSouth or any of BellSouth's affiliates have reserved for future use and a detailed description of the specific future uses for which the space has been reserved. Subject to an appropriate nondisclosure agreement or provision, BellSouth shall permit KMC III to inspect any floor plans or diagrams that BellSouth provides to the Commission**.**

6.6 Waiting List. On a first-come, first-served basis, governed by the date of receipt of an application or Letter of Intent, BellSouth will maintain a waiting list of requesting carriers who have either received a Denial of Application or, where it is publicly known that the Premises is out of space, have submitted a Letter of Intent to collocate in that Premises. BellSouth will notify the requesting carriers on the waiting list by mail when space becomes available, according to the position of each requesting carrier on said waiting list.

6.6.1 In Florida, on a first come, first served basis, governed by the date of the receipt of an application or Letter of Intent, BellSouth will maintain a waiting list of requesting carriers who have either received a Denial of Application or, where it is publicly known that the Premises is out of space, have submitted a Letter of Intent to collocate in that Premises. Sixty (60) days prior to space becoming available, if known, BellSouth will notify the Commission and the telecommunications carriers on the waiting list by mail when space becomes available according to the position of each telecommunications carrier on said waiting list. If BellSouth does not know sixty (60) days in advance of when space will become available, BellSouth will notify the Commission and the telecommunications carriers on the waiting list within two (2) business days of the determination that space is available. A telecommunications carrier that, upon denial of physical collocation, requests virtual collocation shall be automatically placed on the waiting list.

6.7 When space becomes available, KMC III must submit an updated, complete, and correct application to BellSouth within thirty (30) days of notification by BellSouth that space will be available in the Premises previously out of space. If KMC III has originally requested caged Collocation Space and cageless Collocation Space becomes available, KMC III may refuse such space and notify BellSouth in writing within the thirty (30) day timeframe that KMC III wants to maintain its place on the waiting list, without accepting the available cageless Collocation Space. KMC III may accept an amount of space less than its originally requested space by submitting an application as

set forth above, and upon request, may maintain its position on the waiting list for the remaining space that was initially requested. If KMC III does not submit an application or notify BellSouth in writing as described above, BellSouth will offer the space to the next telecommunications carrier on the waiting list and remove KMC III from the waiting list. Upon request, BellSouth will advise KMC III as to its position on the waiting list.

6.8 Public Notification. BellSouth will maintain on its Interconnection Services website a notification document that will indicate all Premises that are without available space. BellSouth shall update such document within ten (10) days of the date that BellSouth becomes aware that insufficient space is available to accommodate physical collocation. BellSouth will also post a document on its Interconnection Services website that contains a general notice when space has become available in a Premises previously on the space exhaust list.

6.9 Application Response.

6.9.1 In Alabama, Georgia, Kentucky, Louisiana, Mississippi, North Carolina, and South Carolina, when space has been determined to be available for caged or cageless arrangements, BellSouth will provide an Application Response within twenty (20) days of receipt of a Bona Fide application for physical collocation and ten (10) days for virtual collocation. The Central Office Application Response will include sufficient information to enable KMC III to place a Firm Order**,** which, at a minimum**,** will consist of the configuration of the space, the Cable Installation Fee, Cable Records Fee, and any other applicable space preparation fees, as described in Section 8 below.

6.9.1.1 BellSouth will provide the Remote Site Application Response in Alabama, Georgia, Kentucky, Mississippi, North Carolina, and South Carolina, when space has been determined to be available, within twenty (20) days of receipt of a Bona Fide application. The Application Response will include, at a minimum, the configuration of the space, the Cable Installation Fee, Cable Records Fee, and the space preparation fees, as described in Section 8 below.

6.9.1.2 BellSouth will provide the Remote Site Application Response in Louisiana, when space has been determined to be available, within thirty (30) days for one (1) to ten (10) applications; thirty-five (35) days for eleven (11) to twenty (20) applications; and for requests of more than twenty (20) applications, the Application Response interval will be increased by five (5) days for every five (5) applications received within five (5) business days. The Application Response will include, at a minimum, the configuration of the space, the Cable Installation Fee, Cable Records Fee, and the space preparation fees, as described in Section 8 below.

6.9.2 In Florida and Tennessee, within fifteen (15) days of receipt of a Bona Fide application, when space has been determined to be available or when a lesser amount of space than that requested is available, then with respect to the space available, BellSouth will provide an Application Response including sufficient information to

enable KMC III to place a Firm Order. The Central Office Application Response will include, at a minimum, the configuration of the space, the Cable Installation Fee, Cable Records Fee, and the space preparation fees, as described in Section 8 below. When KMC III submits ten (10) or more applications within ten (10) days, the initial fifteen (15) day response interval will increase by ten (10) days for every additional ten (10) applications or fraction thereof.

6.9.2.1 BellSouth will provide the Remote Site Application Response in Florida, within fifteen (15) days of receipt of a Bona Fide application, when space has been determined to be available or when a lesser amount of space than that requested is available, then with respect to the space available, BellSouth will provide an Application Response including sufficient information to enable KMC III to place a Firm Order. The Application Response will include, at a minimum, the configuration of the space, the Cable Installation Fee, Cable Records Fee, and the space preparation fees, as described in Section 8 below. When KMC III submits ten (10) or more applications within ten (10) days, the initial fifteen (15) day response period will increase by ten (10) days for every additional ten (10) applications or fraction thereof.

6.9.2.2 BellSouth will provide the Remote Site Application Response in Tennessee, when space has been determined to be available, within twenty (20) days of receipt of a Bona Fide application. The Application Response will include, at a minimum, the configuration of the space, the Cable Installation Fee, Cable Records Fee, and the space preparation fees, as described in Section 8 below.

6.10 Application Modifications.

6.10.1 If a modification or revision is made to any information in the Bona Fide Application prior to a BFFO, with the exception of modifications to Customer Information, Contact Information or Billing Contact Information, at the request of KMC III, or necessitated by technical considerations agreed to by both Parties, the application shall be considered a new application and handled as a new application with respect to the response and provisioning intervals. BellSouth will charge KMC III the appropriate application fee associated with the level of assessment performed by BellSouth. If the modification requires no labor or capital expenditure by BellSouth, but BellSouth must perform an assessment of the application to evaluate whether or not BellSouth would be required to perform necessary infrastructure or provisioning activities, then an Administrative Only Application Fee shall apply. The fee for an application modification where the modification requested has limited effect (e.g., requires labor expenditure but no capital expenditure by BellSouth and where sufficient cable support structure, HVAC, power and terminations are available) shall be the Subsequent Application Fee as set forth in Exhibit B. A modification involving a capital expenditure by BellSouth shall require KMC III to submit the application with an Initial Application Fee. This nonrecurring fee will be billed by BellSouth on the date that BellSouth provides KMC III with an Application Response.

6.11 Bona Fide Firm Order.

6.11.1 KMC III shall indicate its intent to proceed with its request for collocation space in a BellSouth Premises by submitting a Bona Fide Firm Order to BellSouth. The BFFO must be received by BellSouth no later than thirty (30) days after receipt of BellSouth's Application Response to KMC III's Bona Fide Application or KMC III's application will expire.

6.11.2 BellSouth will establish a firm order date based upon the date BellSouth is in receipt of KMC III's BFFO. BellSouth will acknowledge the receipt of KMC III's BFFO within seven (7) days of receipt, so that KMC III will have positive confirmation that its BFFO has been received. BellSouth's response to a BFFO will include a Firm Order Confirmation, which contains the firm order date. No revisions can be made to a BFFO.

7. Construction and Provisioning

7.1 Construction and Provisioning Intervals.

7.1.1 In Florida and Tennessee, BellSouth will complete construction for physical and Remote Site collocation arrangements as soon as possible within a maximum of ninety (90) days from receipt of a BFFO or as agreed to by the Parties. For Alterations requested to the Collocation Space after initial space completion, BellSouth will complete construction for physical and remote site collocation arrangements as soon as possible within a maximum of forty-five (45) days from receipt of a BFFO or as agreed to by the Parties if no additional space requested. If BellSouth does not believe that construction for physical and remote site collocation will be completed within the relevant timeframe and BellSouth and KMC III cannot agree upon a completion date, within forty-five (45) days of receipt of the BFFO for an initial request, and within thirty (30) days of receipt of the BFFO for an Alteration, BellSouth may seek an extension from the Commission. For virtual collocation arrangements in Florida and Tennessee, BellSouth will complete construction for initial and Alterations requested to the virtual Collocation Space after initial space completion as soon as possible within a maximum of sixty (60) days.

7.1.2 In Alabama, Georgia, Kentucky, Louisiana, Mississippi, North Carolina, and South Carolina, BellSouth will complete construction for caged collocation arrangements under ordinary conditions as soon as possible within a maximum of ninety (90) days from receipt of a BFFO or as agreed to by the Parties. BellSouth will complete construction for cageless and Remote Site collocation arrangements under ordinary conditions as soon as possible within a maximum of sixty (60) days from receipt of a BFFO and ninety (90) days from receipt of a BFFO for extraordinary conditions, or as agreed to by the Parties. BellSouth will complete construction for virtual collocation arrangements under ordinary conditions as soon as possible within a maximum of fifty (50) days under ordinary conditions from receipt of a BFFO and seventy five (75) days from receipt of a BFFO for extraordinary conditions, or as agreed to by the Parties.

Ordinary conditions are defined as space available with only minor changes to support systems required such as, but not limited to, HVAC, cabling and the power plant. Extraordinary conditions shall include, but not be limited to, major BellSouth equipment rearrangements or additions; power plant additions or upgrades; major mechanical additions or upgrades; a major upgrade for ADA compliance; environmental hazard or hazardous materials abatement; and arrangements for which equipment shipping intervals are extraordinary in length. The Parties may mutually agree to renegotiate an alternative provisioning interval or BellSouth may seek a waiver from this interval from the Commission.

7.1.3 Records Only Change. When KMC III adds equipment within initial demand parameters that requires no additional space preparation work on the part of BellSouth, then no additional charges or additional intervals will be imposed by BellSouth.

7.1.4 Central Office Augments. In the states of Alabama, Georgia, Kentucky, Louisiana, Mississippi, North Carolina, and South Carolina, BellSouth will provide the reduced intervals outlined below to KMC III, when KMC III requests a Central Office augment that is identified in Sections 7.1.4.1, 7.1.4.2, 7.1.4.3, 7.1.4.4 and 7.1.4.5 ("Augment") after the Space Ready Date for existing physical collocation space. The cost of any such Augment shall be paid by KMC III. Unless otherwise set forth in Section 7.1.4.10 below, any such Augment application will require a Subsequent Application.

7.1.4.1 Simple Augments will be completed within twenty (20) days after receipt of the BFFO for an:

- Extension of Existing AC Circuit Capacity within Arrangement Where Sufficient Circuit Capacity is Available
- Fuse Change and/or Increase or Decrease -48V DC Power from Existing ILEC BDFB

7.1.4.2 Minor Augments will be completed within forty-five (45) days after receipt of the BFFO for:

- 168 DS1s Terminations at the ILEC Demarcation Frame (Databasing Only; Panels, Relay Racks and Overhead Racking Exist)
- 96 DS3s Terminations at the ILEC Demarcation Frame (Databasing Only; Panels, Relay Racks and Overhead Racking Exist)
- 99 Fiber Terminations at the ILEC Demarcation Frame (Databasing Only; Panels, Relay Racks and Overhead Racking Exist)
- Maximum of 2000 Service Ready DS0 Terminations at the ILEC Demarcation Frame (Databasing Only; Panels, Relay Racks and Overhead Racking Exist)

7.1.4.3 Intermediate Augments will be completed within sixty (60) days after receipt of the BFFO for:

- 168 DS1s (Databasing and Installation of Termination Panels, Relay Racks or Additional Structure as Required)
- 96 DS3s (Databasing and Installation of Termination Panels, Relay Racks or Additional Structure as Required)
- 99 Fiber Terminations (Databasing and Installation of Termination Panels, Relay Racks or Additional Structure as Required)
- 2000 DS0s (Databasing and Installation of Termination Panels, Relay Racks or Additional Structure as Required)
- Install Cable Racking or Other Support Structures as Required to Support Co-Carrier Cross Connects (Adequate Floor or Ceiling Structural Capacity Exists and Support/Protection Structure for Fiber Patch Cord is Excluded)

7.1.4.4 Major Augments –Physical Collocation will be completed within ninety (90) days after BFFO and includes all requests for additional physical collocation space (caged or cageless).

7.1.4.5 Major Augments – Virtual Collocation will be completed within seventy-five (75) days after BFFO and includes all requests for additional virtual collocation space

7.1.4.6 If KMC III submits an Augment application request that includes two Augment items from the same category in Sections 7.1.4.1, 7.1.4.2, and 7.1.4.3 above, the Augment interval associated with the next highest augment category will apply (e.g., if two items from the minor Augment category are requested on the same request, then an interval of sixty (60) days from the receipt of the BFFO would apply, which is the interval associated with the intermediate category).

7.1.4.7 If KMC III submits an Augment application request that includes three Augment items from the same category in Sections 7.1.4.1, 7.1.4.2, and 7.1.4.3 above, the major Augment interval of ninety (90) days from the receipt of the BFFO would apply (e.g., if three items from the simple augment category are requested on the same request for a physical collocation arrangement, then an interval of ninety (90) days from the receipt of the BFFO would apply, which is the major physical augment interval; likewise if three items from the simple Augment category are requested on the same request for a virtual collocation arrangement, then an interval of seventy-five (75) days from the receipt of the BFFO would apply, which is the major virtual Augment interval.

7.1.4.8 If KMC III submits an Augment application request that includes one Augment item from two separate categories in Sections 7.1.4.1, 7.1.4.2 and 7.1.4.3 above, the Augment interval associated with the higher augment category will apply (e.g., if an item from the minor augment category and an item from the intermediate Augment category are requested on the same request, then an interval of sixty (60) days from the receipt of the BFFO would apply, which is the interval associated with the intermediate Augment category).

7.1.4.9 All Augments not expressly included in the Simple, Minor, Intermediate or Major categories as outlined above will be placed into the appropriate category as negotiated

by KMC III and BellSouth. If KMC III and BellSouth are unable to determine the appropriate category through negotiation, then the appropriate major augment category identified in Sections 7.1.4.4 and 7.1.4.5 above would apply based on whether the Augment request is for KMC III's physical or virtual collocation arrangement.

7.1.4.10 Individual application fees associated with simple, minor and intermediate Augment applications are contained in Exhibit B. The appropriate application fee will be assessed to KMC III at the time BellSouth provides KMC III with the Application Response. If KMC III requests multiple items from different Augment categories BellSouth will bill KMC III the Augment Application Cost, as identified in Exhibit B, associated with the higher Augment category only. KMC III will be assessed a Subsequent Application Fee for all Major Augment applications (Major Augments are defined above in Sections 7.1.4.4 and 7.1.4.5 above). The Subsequent Application Fee is also reflected in Exhibit B.

7.2 Joint Planning. Unless otherwise agreed to by the Parties, a joint planning meeting or other method of joint planning between BellSouth and KMC III will commence within a maximum of twenty (20) days from BellSouth's receipt of a BFFO. At such meeting, the Parties will agree to the preliminary design of the Collocation Space and the equipment configuration requirements as reflected in the Application and affirmed in the BFFO. KMC III Upon mutual agreement and within a mutually agreed upon time frame, the Parties will exchange any additional information requested (including, but not limited to cable type and cable termination specifications, naming convention and requirements, diagrams or drawings depicting the exact path of entrance facilities from the interconnection point to the Collocation Space, power cabling connectivity, feeder and fuse specifications and requirements, BellSouth contacts and escalation procedures, and identification of demarcation points) at the Joint Planning Meeting.

7.3 Permits. Each Party or its agent(s) will diligently pursue filing for the permits required for the scope of work to be performed by that Party or its agent(s) within ten (10) days of the completion of the finalized construction design and specifications.

7.4 Acceptance Walkthrough. KMC III will schedule and complete an acceptance walkthrough of each Collocation Space with BellSouth within fifteen (15) days of BellSouth's notification to KMC III that the Collocation Space is ready for occupancy. In the event KMC III fails to complete an acceptance walkthrough within this fifteen (15) day interval, the Collocation Space shall be deemed accepted by KMC III provided that BellSouth has complied with all space preparation, provisions of KMC III's BFFO, and that all required of BellSouth is completed on the Space Ready Date**.** BellSouth will correct any deviations to KMC III's original or jointly amended design and/or specification requirements within seven (7) days after the walkthrough, unless the Parties jointly agree upon a different timeframe**.** At the end of the acceptance walkthrough or after any deviations are corrected, KMC III will execute a Space Acceptance Form indicating its acceptance of the Collocation Space.

7.5 Central Office Circuit Facility Assignments (CFAs). BellSouth will provide CFAs to KMC III as soon as possible and no later than thirty (30) days after BellSouth's receipt of a Bona Fide Firm Order, except as set forth in Section 7.5.1 below. The ACTL will be provided to KMC III no later than with the issuance of the CFA.

7.5.1 To provide CFAs to KMC III prior to the Provisioning Interval for those Premises in which KMC III has a physical collocation arrangement with a POT bay provided by KMC III or a virtual collocation arrangement, KMC III must provide BellSouth with the following information:

7.5.1.1 For a physical collocation arrangement with a KMC III-provided POT bay - a complete layout of the POT panels (equipment inventory update (EIU) form) showing locations, speeds, etc.

7.5.1.2 For a virtual collocation arrangement - a complete layout of KMC III's equipment (equipment inventory update (EIU) form), including the locations of the low speed ports and the specific frame terminations to which the equipment will be wired by KMC III's BellSouth Certified Supplier.

7.5.1.3 KMC III may submit an EIU form at any time after the twentieth ($20^{th)}$ day after the BFFO. CFAs will be provided within ten (10) days of receipt of the EIU form.

7.5.2 BellSouth will bill KMC III a nonrecurring charge, as set forth in Exhibit B, each time KMC III requests a resend of its CFAs for any reason other than a BellSouth error in the CFAs initially provided to KMC III.

7.5.3 For a Remote Site CFAs are not used. Distribution lines will be accessed by KMC III provisioning a copper cable through a conduit from the Remote Site collocation space to the feeder distribution interface (FDI) of sufficient length for splicing. BellSouth personnel will splice KMC III's cable to a group/bundle of the distribution cable at the FDI. Groups/Bundles will be provided in 8-pair increments. In order to establish the cable/pair range KMC III must submit a Remote Site Splitter Ordering Document (RSOD) which can be found in the Remote Site High Frequency Spectrum (RS HFS) CLEC Information Package located on BellSouth's web site at http://interconnection.bellsouth.com/guides/unedocs/rs_hfs.pdf. Once the cable/pair range is established KMC III can then submit LSRs for individual line activations.

7.6 Use of BellSouth Certified Supplier. KMC III shall select a supplier which has been approved as a BellSouth Certified Supplier to perform all construction, engineering as specified in TR 73503, installation and removal work. KMC III, if a BellSouth Certified Supplier, or KMC III's BellSouth Certified Supplier must follow and comply with all of the reasonable and nondiscriminatory requirements, outlined in BellSouth TR 73503, TR 73519, TR 73572, and TR 73564. In some cases, KMC III must use a separate BellSouth Certified Supplier for those work activities associated with transmission equipment, switching equipment and power equipment, unless the BellSouth Certified Supplier has met the requirements for all of the required work activities. BellSouth shall provide KMC III with a list of BellSouth Certified

Suppliers, upon request. KMC III, if a BellSouth Certified Supplier, or its BellSouth Certified Supplier(s) shall be responsible for installing KMC III's equipment and associated components, extending power cabling to the BellSouth power distribution frame, performing operational tests after installation is complete, and notifying BellSouth's equipment engineers and KMC III upon successful completion of installation and all associated work.. In cases where a BellSouth Certified Supplier is used, the BellSouth Certified Supplier shall bill KMC III directly for all work performed for KMC III pursuant to this Attachment. BellSouth shall have no liability for, nor responsibility to pay, such charges imposed by KMC III's BellSouth Certified Supplier. BellSouth shall make available its supplier certification program to KMC III or any supplier proposed by KMC III and will not unreasonably withhold certification.

7.7 Alarm and Monitoring. BellSouth shall place environmental alarms in the Premises for the protection of BellSouth equipment and facilities. KMC III shall be responsible for placement, monitoring and removal of environmental and equipment alarms used to service KMC III's Collocation Space. Upon request, BellSouth will provide KMC III with an applicable tariffed service(s) to facilitate remote monitoring of collocated equipment by KMC III. Both Parties shall use best efforts to notify the other of any verified environmental condition (e.g., temperature extremes or excess humidity) known to that Party.

7.8 Virtual to Physical Collocation Relocation. KMC III may relocate its existing virtual collocation arrangement(s), according to the standard intervals identified in Sections 7.1.1 and 7.1.2 above, to a physical collocation arrangement(s) and pay the appropriate fees associated with physical collocation and the rearrangement or reconfiguration of services terminated in the virtual collocation arrangement, as set forth in Exhibit B to this Attachment 4. In the event BellSouth knows when additional space for physical collocation may become available at the location requested by KMC III, such information will be provided to KMC III in BellSouth's written denial of physical collocation space. To the extent that (i) physical Collocation Space becomes available to KMC III within one hundred eighty (180) days of BellSouth's written denial of KMC III's request for physical collocation, (ii) BellSouth had knowledge that the space was going to become available, and (iii) KMC III was not informed in the written denial that physical Collocation Space would become available within such one hundred eighty (180) days, then KMC III may relocate its virtual collocation arrangement to a physical collocation arrangement and will receive a credit for any nonrecurring charges previously paid for such virtual collocation. KMC III must arrange with a BellSouth Certified Supplier for the relocation of equipment from its virtual Collocation Space to its physical Collocation Space and will bear the cost of such relocation.

7.9 Virtual to Physical Conversion (In-Place). Virtual collocation arrangements may be converted to "in-place" physical arrangements if the potential conversion meets the following four criteria: 1) there is no change in the amount of equipment or the configuration of the equipment that was in the virtual collocation arrangement; 2) the conversion of the virtual collocation arrangement will not cause the equipment or the results of that conversion to be located in a space that BellSouth has reserved for its

own future needs; 3) the converted arrangement does not limit BellSouth's ability to secure its own equipment and facilities due to the location of the virtual collocation arrangement; and 4) any changes to the arrangement can be accommodated by existing power, HVAC, and other requirements. BellSouth will complete virtual to in-place physical collocation conversions within forty-five (45) days from receipt of the BFFO. BellSouth will bill KMC III an Administrative Only Application Fee as set forth in Exhibit B on the date that BellSouth provides an Application Response to KMC III.

7.10 Cancellation. If at any time prior to space acceptance, KMC III cancels its order for Collocation Space(s) (Cancellation), BellSouth will bill the applicable nonrecurring rate(s) as set forth in Exhibit B for any and all work processes for which work has begun or been completed.

7.11 Licenses. KMC III, at its own expense, will be solely responsible for obtaining from governmental authorities, and any other appropriate agency, entity, or person, all rights, privileges, and licenses necessary or required, if any, to operate as a provider of telecommunications services to the public or to build-out, equip and/or occupy the Collocation Space.

7.12 Environmental Compliance. The Parties agree to utilize and adhere to the Environmental Hazard Guidelines identified in Exhibit A attached hereto.

8. Rates and Charges

8.1 KMC III agrees to pay the rates and charges identified in Exhibit B attached hereto.

8.2 Application Fee. BellSouth shall assess an application fee by generating a service order, which shall be issued at the time BellSouth responds that space is available pursuant to Section 6.9 above. BellSouth will bill this nonrecurring fee on the date that BellSouth provides an Application Response to KMC III.

8.2.1 In Tennessee, the applicable application fee for caged physical collocation is the planning fee for both Initial Applications and Subsequent Applications placed by KMC III. BellSouth will bill this nonrecurring fee on the date that BellSouth provides an Application Response to KMC III.

8.3 Rack/Bay Space. The rack/bay space charge includes reasonable charges for air conditioning, ventilation and other allocated expenses associated with maintenance of the Remote Site Location, and includes amperage necessary to power KMC III's equipment. KMC III shall pay rack/bay space charges based upon the number of racks/bays requested. BellSouth will assign Remote Collocation Space in conventional remote site rack/bay lineups where technically feasible.

8.4 Recurring Charges. If KMC III has met the applicable fifteen (15th) day walkthrough interval specified in Section 4.3 above, billing for recurring charges will begin upon the Space Acceptance Date. In the event that KMC III fails to complete an acceptance

walkthrough within the applicable fifteen (15th) day interval, billing for recurring charges will commence on the Space Ready Date. If KMC III occupies the space prior to the Space Ready Date, the date KMC III occupies the space is deemed the new Space Acceptance Date and billing for recurring charges will begin on that date.

8.5 KMC III shall continue the payment of all monthly fees to BellSouth until the date that KMC III, and if applicable KMC III's Guest(s), has fully vacated the Collocation Space and the Space Relinquishment Form has been accepted by BellSouth. Billing for monthly recurring charges will cease on the date that KMC III and BellSouth conduct an inspection of the terminated space and jointly sign off on the Space Relinquishment Form or on the date that KMC III signs off on the Space Relinquishment Form and sends this form to BellSouth, if a subsequent inspection of the terminated space by BellSouth reveals no discrepancies. In the latter case, if subsequent inspection by BellSouth within fifteen (15th) days of its receipt of the Space Relinquishment Form**,** does reveal discrepancies, billing for monthly recurring charges will cease on the date that BellSouth and KMC III jointly conduct an inspection, which confirms that KMC III has corrected all of the noted discrepancies. A Subsequent Application Fee will not apply for the termination of occupancy.

8.6 Space Preparation. Space preparation fees consist of a nonrecurring charge for firm order processing and monthly recurring charges for central office modifications assessed per arrangement, per square foot and common systems modifications assessed per arrangement, per square foot for cageless collocation and per cage for caged collocation. KMC III shall remit payment of the nonrecurring firm order processing fee coincident with submission of a BFFO. The charges recover the costs associated with preparing the Collocation Space, which includes survey, engineering of the Collocation Space, design and modification costs for network, building and support systems. In the event KMC III opts for cageless space, the space preparation fees will be assessed based on the total floor space dedicated to KMC III as prescribed in this Section. If KMC III was previously billed ICB or nonrecurring space preparation charges by BellSouth, but has not paid such charges in full, BellSouth will determine any outstanding amounts due from KMC III, and the Parties will agree on such outstanding amounts that are due and owing to BellSouth. If KMC III pays such outstanding amounts to BellSouth, no additional space preparation charges will be applicable or billed going forward for those collocation arrangements, for which space preparation charges have been paid in full through previously billed ICB or nonrecurring space preparation charges. However, any new requests for collocation space or augmentations requesting additional space for an existing collocation arrangement will be billed pursuant to the current monthly recurring space preparation rates set forth in Exhibit B.

8.7 Floor Space. Billing for floor space, if applicable, will begin on the Space Acceptance Date. The Floor Space Charge includes reasonable charges for lighting, HVAC, and other allocated expenses associated with maintenance of the Premises but does not include any expenses for power supplied to KMC III for its equipment**.** When the Collocation Space is enclosed, KMC III shall pay floor space charges based upon the number of square feet so enclosed. When the Collocation Space is not enclosed, KMC

III shall pay floor space charges based upon the following floor space calculation: [(depth of the equipment lineup in which the rack is placed) + (0.5 x maintenance aisle depth) + (0.5 x wiring aisle depth)] X (width of rack and spacers). For purposes of this calculation, the depth of the equipment lineup shall consider the footprint of equipment racks plus any equipment overhang. BellSouth will assign unenclosed Collocation Space in conventional equipment rack lineups where feasible. In the event KMC III's equipment requires special cable racking, isolated grounding or other treatment which prevents placement within conventional equipment rack lineups, KMC III shall be required to request an amount of floor space sufficient to accommodate the total equipment arrangement.

8.8 Cable Installation. Cable Installation Fee(s) are assessed per entrance cable placed. This nonrecurring fee will be billed by BellSouth upon receipt of KMC III's BFFO.

8.9 Security Escort. Rates for a security escort are assessed according to the schedule appended hereto as Exhibit B beginning with the scheduled escort time. BellSouth will wait for one half (1/2) hour after the scheduled time for such an escort and KMC III shall pay for such half hour charges in the event KMC III fails to show up.

8.10 Cable Record Charges. These charges apply for work required to build cable records in BellSouth systems. The VG/DS0 cable record charge is for a maximum of thirty six hundred (3600) records. The Fiber cable record charge is for a maximum of ninety-nine (99) records. These nonrecurring fees will be billed upon receipt of KMC III's BFFO.

8.11 Power Rates. Rates for power are as set forth in Exhibit B. Applicable rates shall vary depending on whether KMC III elects to be billed on a fused basis, by electing to remain (or install new collocations or augments) under the traditional collocation power billing method, or on a usage basis, by electing to convert collocations to (or install new collocations or augments under) the power usage metering option set forth in Section 9 below.

8.11.1 Under the fused amp billing option, KMC III shall be billed at the Commission's most recently approved fused amp recurring rate for DC power. However, if the Parties either previously agreed to "grandfather" such arrangements or such arrangements are grandfathered as a result of KMC III having provided documentation to BellSouth demonstrating that KMC III paid installation costs under an ICB or nonrecurring rate schedule for the collocation arrangement power installation, KMC III will be billed the grandfathered recurring rate for the DC power set forth in Exhibit B.

8.11.2 Other. If no rate is identified in the contract, the rate for the specific service or function will be negotiated by the Parties upon request by either Party.

8.12 Grandfathered Rates.

8.12.1 The rates for the recurring charges for grandfathered CCXC will be the rates in effect before the Effective Date of this Agreement, if any, and such rates shall be set forth in Exhibit B.

8.12.2 The grandfathered POT Bay rates are pursuant to state ordered rates for particular POT Bay elements.

9. Central Office Power

9.1 BellSouth shall make available –48 Volt (-48V) Direct Current (DC) power for KMC III's Collocation Space at a BellSouth Battery Distribution Fuse Bay (BDFB). If KMC III was previously served off BellSouth's main power board pursuant to KMC III's previous Interconnection Agreement, that arrangement shall be grandfathered. Recurring charges for -48V DC power will be assessed as set forth in Section 8.11 above.

9.1.1 Fused Amp Billing Option. Monthly recurring charges for -48V DC power will be assessed per fused amp per month using the following formula:

For power provisioned from a BDFB – The number of fused amps requested by KMC III on its collocation application for power that is being provisioned from a BellSouth BDFB should reflect a multiplier of one point five (1.5) to convert the requested amperage to fused amps, with a minimum of ten (10) fused amps required. The number of fused amps requested by KMC III on its collocation application will be multiplied by the DC power fused amp rate set forth in Exhibit B, which rate has already been adjusted through the application of the point sixty-seven (.67) multiplier.

For power provisioned from the main power board – The number of fused amps made available at the main power board, in increments of two hundred twenty-five (225) amps/main power board circuit, multiplied by the DC power fused amp rate set forth in Exhibit B, which rate has already been adjusted through the application of the point sixty-seven (.67) multiplier.

9.1.2 Central Office Physical Collocation Regional Power Usage Measurement Option. The Central Office Regional Power Usage Measurement Option provided in this Section 9 shall be applicable for all nine (9) states in the BellSouth region (Alabama, Florida, Georgia, Kentucky, Louisiana, Mississippi, North Carolina, South Carolina and Tennessee) as a package. This option shall be provided in all nine (9) states in lieu of other metered options that exist or may subsequently arise (by order or contract) in any of these nine (9) states for the duration of this Agreement. If any metered rates or terms of this power usage provision are modified pursuant to the change in law provision as set forth in the General Terms and Conditions of this Agreement then, for each state hereunder, all of the ordered rates and associated terms and conditions shall apply thereafter and to each physical collocation arrangement to which the power

usage measurement option applied and, to the extent that there are no such ordered rates in a state, the rates of the then current BellSouth standard interconnection agreement shall apply in such state subject to the modification of Agreement provisions in the General Terms and Conditions. If any metered rates or terms of this power usage provision are modified by KMC III's adoption of the rates, terms and conditions of another CLEC's interconnection agreement pursuant to Section 252 (i) of the Act in any of the states covered by this Agreement, such adopted rates, terms and conditions shall apply thereafter and to each physical collocation arrangement to which the power usage measurement option applied and, in any states not covered by such adoption, the rates, terms and conditions for power usage measurement, if any, of the then current BellSouth standard interconnection agreement shall apply, provided that such language fully effectuates and is consistent with applicable state commission orders.

9.1.3 AC Usage Component of DC Power Charges. BellSouth, or its BellSouth Certified Supplier, will perform all metering activities, which will include providing the necessary ammeter or other measurement device, to measure the actual power usage being drawn by KMC III's physical collocation equipment on both the A and B power feeds. The AC Usage Component of the DC Power charge will be based upon the sum of either the instantaneous or busy hour average electrical current readings, depending on the capabilities of the ammeter or other measurement device. KMC III may, at its sole cost and expense, install or maintain its own meters on those BDFBs located in its own physical Collocation Space(s) and may notify BellSouth if it would like to offer BellSouth the option of using such meters for the purpose of establishing measurements. In such case, BellSouth, or its BellSouth Certified Supplier, will have the option of reading and recording the actual power usage from either the meter installed or maintained by KMC III on KMC III's own BDFB(s) or via a BellSouth provided measurement device. The usage reading for the option elected by BellSouth shall be used for purposes of calculating the billing, provided that BellSouth elects one method and continues to use that method unless BellSouth provides reasonable notice to KMC III to change the method.

9.1.3.1 If BellSouth, or its BellSouth Certified Supplier, requires access to KMC III's physical Collocation Space for purposes of measuring the power usage, BellSouth or its BellSouth Certified Supplier shall provide KMC III with a minimum of forty-eight (48) hours notice that access is required. KMC III shall respond to such request for access within twenty-four (24) hours for the purpose of establishing the date and time of access to KMC III's physical Collocation Space. Once the date and time of access to KMC III's physical Collocation Space has been agreed upon, KMC III and BellSouth or its BellSouth Certified Supplier shall adhere to the agreed upon date and time, or provide a minimum of three (3) hours notice to the other Party if the original appointment will be missed or must be cancelled and rescheduled. If KMC III fails to provide access to its physical Collocation Space or fails to provide BellSouth/BellSouth Certified Supplier with a minimum of three (3) hours notice of the necessity to cancel and/or reschedule the appointment, then KMC III shall pay, for the missed meter reading a nonrecurring charge, as set forth in Exhibit B, and shall pay

a nonrecurring charge as set forth in Exhibit B for each additional meter reading trip required to measure KMC III's power usage. If BellSouth/BellSouth Certified Supplier fails to provide KMC III with a minimum of three (3) hours notice of the necessity to cancel and/or reschedule the appointment, BellSouth shall not bill KMC III a nonrecurring charge, as set forth in Exhibit B for such missed appointment, and shall waive the charge for the next additional meter reading trip required to measure KMC III's power usage.

9.1.3.2 For each new physical collocation arrangement for which KMC III desires the metered power usage measurement option, KMC III shall indicate on its Initial Application that the metered power usage measurement option is being elected. For each location that KMC III wants to convert to the metered power usage measurement option, KMC III will submit a Subsequent Application and agrees to include in the Comments section of the Subsequent Application the following comment:

> This Subsequent Application is KMC III's certification that KMC III is opting to convert this physical collocation arrangement to the power usage measurement option and will permit BellSouth and/or the BellSouth Certified Supplier to use an ammeter or other measurement device to measure its actual power usage or, at BellSouth's election, provide BellSouth and/or the BellSouth Certified Supplier with access to KMC III's meter on KMC III's own BDFB(s) (if KMC III chooses to offer BellSouth that option), located in KMC III's physical Collocation Space, to measure actual power usage on all power feeds.

9.1.3.3 BellSouth will bill KMC III a Power Reconfiguration Application Fee, as set forth in Exhibit B, on the date that BellSouth provides an Application Response to each Subsequent Application requesting to convert a physical collocation arrangement to the metered power usage measurement option. BellSouth shall then arrange for the measurement of KMC III's actual power usage on each power feed (each A and B feed) once per quarter at each of KMC III's physical collocation arrangements for which KMC III has submitted an Initial or Subsequent Application electing the metered power usage option. Based upon the actual power usage measurement taken by BellSouth or the BellSouth Certified Supplier, BellSouth shall assess KMC III charges for AC power usage for the following quarter based upon KMC III's actual metered usage for each power feed (both the A and B feeds) or a minimum of ten (10) amps of –48V DC power usage for the sum of the A and B feeds for each power cable, whichever is greater. Such usage shall then be multiplied by the applicable AC power rate, set forth in Exhibit B, to determine the appropriate monthly recurring AC Usage charge that will be billed to KMC III for the following three (3) calendar months or until the next AC power usage measurement is taken, whichever is later.

9.1.3.4 Either Party, within fifteen (15) days of notice of the usage measurement established by the scheduled meter reading, may challenge the accuracy of that reading by requesting a new reading. If KMC III requests that an unscheduled (prior to the next scheduled quarterly power reading date) power usage reading be taken, then KMC III

will be responsible for paying the "Additional Meter Reading Trip Charge" contained in Exhibit B. If BellSouth requests a power usage reading be taken in this instance, then KMC III will not be charged the "Additional Meter Reading Trip Charge" for the unscheduled meter reading. If the readings vary by more than ten (10) % or five (5) Amps, whichever is greater, the Parties shall work cooperatively to reconcile such discrepancies and establish the appropriate usage figure in a reasonable and expeditious manner. If there is no discrepancy between the readings of ten percent (10%) or five (5) Amps, whichever is greater, then the Party disputing the original meter reading shall pay the Additional Meter Reading Trip Charge contained in Exhibit B. If the readings do not vary outside these ranges, the initial reading will be used to calculate KMC III's AC Usage charge until the next scheduled power reading.

9.1.3.5 When KMC III submits the appropriate Initial or Subsequent Application indicating its desire to elect the power measurement usage option for a particular physical collocation arrangement in a specific Central Office, BellSouth will provide the associated Application Response pursuant to Section 6 above. It will then be the responsibility of KMC III to submit a BFFO, indicating its desire to proceed with its request. After BellSouth receives the BFFO from KMC III, the Initial or Subsequent Application will be completed by BellSouth within the provisioning intervals contained in Section 7 above and KMC III will be notified of the Space Ready Date or when the appropriate record and database changes have been made by BellSouth to reflect KMC III's election of the power measurement usage option (which will be considered the "Space Ready Date" for purposes of a Subsequent Application submitted to convert a particular physical collocation arrangement in a specific Central Office to the power measurement usage option). BellSouth will not permit KMC III to elect an earlier Space Acceptance Date than the Space Ready Date for any request submitted via a Subsequent Application for an existing physical collocation arrangement. When a Subsequent Application is used to elect the power measurement usage option and there are no other changes requested, billing for the recurring charges associated with the AC Usage and DC Power Infrastructure will begin upon the Space Ready Date. If KMC III occupies the space prior to the Space Ready Date, for Initial Application requests only, the date KMC III occupies the space will be deemed the new Space Acceptance Date and the billing for the AC Usage and DC Power Infrastructure will begin on that date. When KMC III elects to move to the power measurement usage option, the number of fused amps of DC Power infrastructure capacity requested by KMC III on its Initial or Subsequent Application will be used for calculating the number of amps to be billed for AC Usage until such time as BellSouth or its BellSouth Certified Supplier can perform, under the currently existing quarterly meter reading schedule, a reading of KMC III's power usage for the requested physical Collocation Space. As soon as this reading has been taken, BellSouth will adjust KMC III's billing accordingly to reflect the actual metered usage back to the Space Acceptance Date. BellSouth will also use this reading for billing purposes until the next quarterly meter reading is performed by BellSouth or its BellSouth Certified Supplier.

9.1.4 Current DC Power Plant Infrastructure Component of DC Power Charges. BellSouth shall assess KMC III a monthly recurring charge as set forth in Exhibit B for BellSouth's power plant infrastructure component of the DC power charges based upon KMC III's fused DC power amperage capacity, as reflected by KMC III on its Initial Application, as well as any Subsequent Applications (i.e., augment applications), for the particular physical collocation arrangement(s) being converted to or electing the power usage metering option for those Central Offices specified by KMC III.

9.1.5 Grandfathered DC Power Plant Infrastructure Component of DC Power Charges. For those physical collocation arrangements that were provisioned to KMC III under an individual case basis pricing structure, where KMC III has already paid all nonrecurring charges associated with the DC infrastructure capital costs associated with such physical collocation arrangement, and for which KMC III has submitted a Subsequent Application to convert such physical collocation arrangements to the metered power usage measurement option, BellSouth shall assess KMC III a monthly recurring charge as set forth in Exhibit B for BellSouth's power plant infrastructure expense component of the DC power charges, based upon KMC III's fused DC power amperage capacity, as reflected by KMC III on its Initial Application, as well as any Subsequent Applications (i.e., augment applications), for the particular physical collocation arrangement(s) being converted to the power usage metering option for those Central Offices specified by KMC III.

9.1.6 Other DC Power Metering Charges. KMC III agrees to notify BellSouth when KMC III has removed or installed telecommunications equipment in KMC III's physical Collocation Space and to ensure that the existing fused DC power capacity is sufficiently engineered to accommodate the power requirements associated with the installation of additional equipment in KMC III's physical Collocation Space. An associated change in power usage will be reflected in the next quarterly power measurement billing cycle.

9.1.6.1 BellSouth will bill KMC III a monthly recurring charge per physical Collocation Space for KMC III's physical collocation arrangements in each state, which reflects: 1) BellSouth's expenses to program the applicable billing systems to accept and process the power usage measurement option, 2) BellSouth's expenses associated with its workforce loading the measured power usage data into BellSouth's OSS and billing systems, and 3) the costs for BellSouth/BellSouth Certified Supplier to supply the clamp-on ammeter or other measurement device and perform the task of reading and recording KMC III's actual power usage at each requested physical collocation site. This "Meter Reading" monthly recurring rate element will be assessed to KMC III for the first twelve (12) power circuits (each A and B feed pair counts as two circuits), and then for each additional two (2) circuits, read by BellSouth or its BellSouth Certified Supplier, at the rates set forth in Exhibit B and based on whether the power meter is provided by BellSouth or its BellSouth Certified Supplier or KMC III.

9.2 When obtaining power from the BDFB, fuses and power cables (A&B) must be engineered (sized) and installed by KMC III's BellSouth Certified Supplier. KMC III

is responsible for contracting with a BellSouth Certified Supplier for power distribution feeder cable runs from a BellSouth BDFB to KMC III's equipment. The BellSouth Certified Supplier contracted by KMC III must provide BellSouth with a copy of the engineering power specifications prior to the day on which KMC III's equipment becomes operational. BellSouth will provide the common power feeder cable support structure between the BellSouth BDFB and KMC III's Collocation Space. KMC III shall contract with a BellSouth Certified Supplier who will be responsible for the following: dedicated power cable support structure within KMC III's Collocation Space, power cable feeds, and terminations of cable.

9.3 If KMC III elects to install its own DC Power Plant, BellSouth shall provide Alternating Current (AC) power to feed KMC III's DC Power Plant. Charges for AC power will be assessed per breaker ampere. When obtaining power from a BellSouth service panel, protection devices and power cables must be engineered (sized) and installed by KMC III's BellSouth Certified Supplier, with the exception that BellSouth shall engineer and install protection devices and power cables for Adjacent Collocation. KMC III's BellSouth Certified Supplier must also provide a copy of the engineering power specifications prior to the day on which KMC III's equipment becomes operational. Charges for AC power shall be assessed pursuant to the rates specified in Exhibit B. AC power voltage and phase ratings shall be determined on a per location basis. At KMC III's option, KMC III may arrange for AC power in an Adjacent Collocation arrangement from a retail provider of electrical power.

9.4 KMC III has the option to purchase power directly from an electric utility company where technically feasible and where space is available in a requested BellSouth Premises. Under such an option, KMC III is responsible for contracting with the electric utility company for its own power feed and meter, and is financially responsible for purchasing all equipment necessary to accomplish the conversion of the commercial AC power to DC power, including inverters, batteries, power boards, bus bars, BDFBs, backup power supplies and power cabling. The actual work to install this arrangement must be performed by a BellSouth Certified Supplier hired by KMC III. KMC III's BellSouth Certified Supplier must comply with all applicable national, regional, state and local safety, electrical, fire and building codes, including the National Electric Safety Code standards, in installing this power arrangement, just as BellSouth is required to comply with these codes. KMC III must submit an application to BellSouth for the appropriate amount of collocation space that KMC III requires to install this type of power arrangement. BellSouth will evaluate the request and determine if the appropriate amount of space is available within the office for the installation of KMC III's power equipment and facilities. This type of power arrangement must be located in an appropriate area in the central office that has been properly conditioned for the installation of power equipment and conforms to the applicable national, regional, state and local safety, electrical, fire and building codes. BellSouth shall waive the application fee or any other nonrecurring charge that would otherwise be due from a CLEC that decides to reconfigure an existing collocation power arrangement so as to purchase power directly from an electric utility company as provided herein. KMC III shall be responsible for the recurring charges associated

with the central office space needed for collocation of this type of power arrangement, including space required to place associated power-related equipment and facilities (i.e., batteries, generator, power meter, etc.). If there is no space available for this type of power arrangement in the requested central office, BellSouth may seek a waiver of these requirements from the state Commission for the central office requested. KMC III would still have the option to order its power needs directly from BellSouth.

9.5 BellSouth will revise monthly recurring power charges to reflect a power upgrade upon notification of the completion of the upgrade by KMC III's BellSouth Certified Supplier. BellSouth will revise recurring power charges to reflect a power reduction upon BellSouth's receipt of the Power Reduction Form from KMC III certifying the completion of the power reduction. Notwithstanding the foregoing, if KMC III 's BellSouth Certified Supplier has not removed or, at BellSouth's discretion, cut the power cabling within thirty (30) days, the power reduction will not become effective until the cabling is removed by KMC III 's BellSouth Certified Supplier and KMC III shall pay the power rate applicable prior to the power reduction request for the period between the receipt pf the Power Reduction Form and the date the power cabling is actually removed.

9.6 If KMC III requests a reduction in the amount of power that BellSouth is currently providing, KMC III must submit a Subsequent Application. If no modification to the Collocation Space is requested other than the reduction in power, the Power Reconfiguration Application Fee as set forth in Exhibit B will apply. If modifications are requested in addition to the reduction of power, the Subsequent Application Fee will apply. BellSouth will bill this nonrecurring fee on the date that BellSouth provides an Application Response.

9.7 If KMC III has grand-fathered power configurations currently served from the BellSouth main power board and requests that its power be reconfigured to connect to a BellSouth BDFB, in a specific central office, KMC III must submit a Subsequent Application. BellSouth will respond to such application within seven (7) days and a Subsequent Application fee will apply for this reconfiguration to a BellSouth BDFB.

9.7.1 In Alabama and Louisiana, if KMC III has grandfathered power configurations currently served from the BellSouth main power board and requests that its power be reconfigured to connect to a BellSouth BDFB, in a specific central office, KMC III must submit a Subsequent Application. BellSouth will respond to such application within seven (7) days and no application fee will apply [BST clarification] for this one time only power reconfiguration to a BellSouth BDFB. For any power reconfigurations thereafter, KMC III will submit a Subsequent Application and the appropriate application fee will apply.

9.8 Remote Site Power. BellSouth shall make available –48 Volt (-48V) DC power for KMC III's Remote Collocation Space at a BellSouth Battery Distribution Fuse Bay (BDFB) within the Remote Site Location. The charge for power shall be assessed as part of the recurring charge for rack/bay space. If the power requirements for KMC

III's equipment exceeds the capacity available, then such power requirements shall be assessed on an individual case basis (ICB). BellSouth will revise recurring power charges to reflect a power upgrade upon notification of the completion of the upgrade by KMC III's BellSouth Certified Supplier. BellSouth will revise recurring power charges to reflect a power reduction upon BellSouth's receipt of the Power Reduction Form from KMC III certifying the completion of the power reduction, including the removal of the power cabling by KMC III's BellSouth Certified Supplier.

9.9 Remote Site Adjacent Collocation Power. Charges for AC power will be assessed per breaker ampere per month. Rates include the provision of commercial and standby AC power, where available. When obtaining power from a BellSouth service panel, protection devices and power cables must be engineered (sized) and installed by KMC III's BellSouth Certified Supplier, with the exception that BellSouth shall engineer and install protection devices and power cables for Adjacent Collocation. KMC III's BellSouth Certified Supplier must also provide a copy of the engineering power specification prior to the equipment becoming operational. Charges for AC power shall be assessed pursuant to the rates specified in Exhibit B. AC power voltage and phase ratings shall be determined on a per location basis. At KMC III's option, KMC III may arrange for AC power in an Adjacent Collocation arrangement from a retail provider of electrical power.

10. Insurance

10.1 KMC III shall, at its sole cost and expense, procure, maintain, and keep in force insurance as specified in this Section and underwritten by insurance companies licensed to do business in the states applicable under this Agreement and having a Best's Insurance Rating of A-.

10.2 KMC III shall maintain the following specific coverage:

10.2.1 Commercial General Liability coverage in the amount of ten million dollars ($10,000,000.00) or a combination of Commercial General Liability and Excess/Umbrella coverage totaling not less than ten million dollars ($10,000,000.00). BellSouth shall be named as an Additional Insured on the Commercial General Liability policy as specified herein.

10.2.2 Statutory Workers Compensation coverage and Employers Liability coverage in the amount of one hundred thousand dollars ($100,000.00) each accident, one hundred thousand dollars ($100,000.00) each employee by disease, and five hundred thousand dollars ($500,000.00) policy limit by disease.

10.3 All policies purchased by KMC III shall be deemed to be primary and not contributing to or in excess of any similar coverage purchased by BellSouth. All insurance must be in effect on or before the date equipment is delivered to Premises and shall remain in effect for the term of this Attachment or until all KMC III's property has been removed from BellSouth's Premises, whichever period is longer. If KMC III fails to maintain

required coverage, BellSouth may pay the premiums thereon and seek reimbursement of same from KMC III.

10.4 KMC III shall submit certificates of insurance reflecting the coverage required pursuant to this Section a minimum of ten (10) business days prior to the commencement of any work in the Collocation Space. Failure to meet this interval may result in construction and equipment installation delays. KMC III shall arrange for BellSouth to receive thirty (30) days' advance notice of cancellation from KMC III's insurance company. KMC III shall forward a certificate of insurance and notice of cancellation/non-renewal to BellSouth at the following address:

BellSouth Telecommunications, Inc.
Attn.: Risk Management Office - Finance
17F54 BellSouth Center
675 W. Peachtree Street
Atlanta, Georgia 30375

10.5 KMC III must conform to recommendations made by BellSouth's fire insurance company to the extent BellSouth has agreed to, or shall hereafter agree to, such recommendations.

10.6 Self-Insurance. If KMC III's net worth exceeds five hundred million dollars ($500,000,000.00), KMC III may elect to request self-insurance status in lieu of obtaining any of the insurance required in Sections 9.2.1 and 9.2.2 above. KMC III shall provide audited financial statements to BellSouth thirty (30) days prior to the commencement of any work in the Collocation Space. BellSouth shall then review such audited financial statements and respond in writing to KMC III in the event that self-insurance status is not granted to KMC III. If BellSouth approves KMC III for self-insurance, KMC III shall annually furnish to BellSouth, and keep current, evidence of such net worth that is attested to by one of KMC III's corporate officers. The ability to self-insure shall continue so long as the KMC III meets all of the requirements of this Section. If KMC III subsequently no longer satisfies this Section, KMC III is required to purchase insurance as indicated by Sections 10.2.1 and 10.2.2 above.

11. Mechanics Liens

11.1 If any mechanics lien or other liens shall be filed against property of either Party (BellSouth or KMC III), or any improvement thereon by reason of or arising out of any labor or materials furnished or alleged to have been furnished or to be furnished to or for the other Party or by reason of any changes, or additions to said property made at the request or under the direction of the other Party, the other Party directing or requesting those changes shall, within thirty (30) business days after receipt of written notice from the Party against whose property said lien has been filed, either pay such lien or cause the same to be bonded off the affected property in the manner provided by law. The Party causing said lien to be placed against the property of the other shall also defend, at its sole cost and expense, on behalf of the other, any action, suit or

proceeding which may be brought for the enforcement of such liens and shall pay any damage and discharge any judgment entered thereon.

12. Inspections

12.1 BellSouth may conduct an inspection of KMC III's equipment and facilities in the Collocation Space(s) prior to the activation of facilities between KMC III's equipment and equipment of BellSouth. BellSouth may conduct an inspection if KMC III adds equipment and may otherwise conduct routine inspections at reasonable intervals mutually agreed upon by the Parties. BellSouth shall provide KMC III with a minimum of seventy-two (72) hours or three (3**)** business days, whichever is greater, advance notice of all such inspections. All costs of such inspection shall be borne by BellSouth.

13. Security and Safety Requirements

13.1 Unless otherwise specified, KMC III will be required, at its own expense, to conduct a statewide investigation of criminal history records for each KMC III employee hired in the past five years being considered for work on the Premises, for the states/counties where the KMC III employee has worked and lived for the past five (5) years. Where state law does not permit statewide collection or reporting, an investigation of the applicable counties is acceptable. KMC III shall not be required to perform this investigation if an affiliated company of KMC III has performed an investigation of the KMC III employee seeking access, if such investigation meets the criteria set forth above. This requirement will not apply if KMC III has performed a pre-employment statewide investigation of criminal history records of the KMC III employee for the states/counties where the KMC III employee has worked and lived for the past five years or, where state law does not permit a statewide investigation, an investigation of the applicable counties.

13.2 KMC III will be required to administer to its personnel assigned to the Premises security training either provided by BellSouth, or meeting reasonable and nondiscriminatory criteria defined by BellSouth.

13.3 KMC III shall provide its employees and agents with picture identification, which must be worn and visible at all times while in the Collocation Space or other areas in or around the Premises. The photo identification card shall bear, at a minimum, the employee's name and photo and KMC III's name. BellSouth reserves the right to remove from its Premises any employee of KMC III not possessing identification issued by KMC III or who has violated any of the reasonable and nondiscriminatory criteria outlined in BellSouth's CLEC Security Training documents. KMC III shall hold BellSouth harmless for any damages resulting from such removal of its personnel from BellSouth Premises.

13.4 KMC III shall not assign to the Premises any personnel with records of felony criminal convictions. KMC III shall not assign to the Premises any personnel with records of misdemeanor convictions, except for misdemeanor traffic violations, without advising BellSouth of the nature and gravity of the offense(s). BellSouth reserves the right to refuse building access to any KMC III personnel who have been identified to have misdemeanor criminal convictions. Notwithstanding the foregoing, in the event that KMC III chooses not to advise BellSouth of the nature and gravity of any misdemeanor conviction, KMC III may, in the alternative, certify to BellSouth that it shall not assign to the Premises any personnel with records of misdemeanor convictions (other than misdemeanor traffic violations).

13.4.1 KMC III shall not knowingly assign to the Premises any individual who was a former employee and whose employment with BellSouth was terminated for a felony for which they were convicted.

13.4.2 KMC III shall not knowingly assign to the Premises any individual who was a former supplier of BellSouth and whose access to a Premises was revoked due to a felony for which they were convicted.

13.5 For each KMC III employee or agent hired by KMC III within five (5) years of being considered for work on the Premises, who requires access to a Premises pursuant to this Attachment, KMC III shall furnish BellSouth, prior to an employee or agent gaining such access, a certification that the aforementioned background check and security training were completed. The certification will contain a statement that no felony convictions were found and certify that the employee completed the security training. If the employee's criminal history includes misdemeanor convictions, KMC III will disclose the nature of the convictions to BellSouth at that time. In the alternative, KMC III may certify to BellSouth that it shall not assign to the Premises any personnel with records of misdemeanor convictions other than misdemeanor traffic violations.

13.5.1 For all other KMC III employees requiring access to a Premises pursuant to this Attachment, KMC III shall furnish BellSouth, prior to an employee gaining such access, a certification that the employee is not subject to the requirements of Section 13.5 above and that security training was completed by the employee.

13.6 At BellSouth's request, KMC III shall promptly remove from BellSouth's Premises any employee of KMC III that BellSouth does not wish to grant access to its BellSouth Premises pursuant to any investigation conducted by BellSouth or prior to the initiation of an investigation if an employee of KMC III is found interfering with the property or personnel of BellSouth or another collocated telecommunications carrier in a material way. For purposes of this provision, material shall mean some action that could have a substantial impact on the operations, equipment or personnel of BellSouth or another collocated telecommunications carrier. Such investigation shall be commenced and completed by BellSouth as promptly and expeditiously as possible. The Parties shall cooperate and communicate, to the extent circumstances permit, to ensure that the Parties may take appropriate remedial measures.

13.7 Security Violations. Each Party reserves the right to interview the other Party**'s** employees, agents, or suppliers in the event of wrongdoing in or on BellSouth's property, or KMC III's Collocation Space, or involving BellSouth's, KMC III's, or another collocated telecommunications carrier's property or personnel, provided that the Party shall provide reasonable notice to the other Party's designated security representative of such interview. Each Party and its suppliers shall reasonably cooperate with the other Party's investigation into allegations of wrongdoing or criminal conduct committed by, witnessed by, or involving such Parties' employees, agents, or suppliers. Additionally, each Party reserves the right to bill the other Party for all reasonable costs associated with investigations involving its employees, agents, or suppliers if it is established and mutually agreed in good faith that such Parties' employees, agents**,** or suppliers are responsible for the alleged act. Each Party shall bill the other Party for the replacement or repair of property, as appropriate, which is stolen or damaged where an investigation determines the culpability of the other Party's employees, agents, or suppliers and where the other Party agrees, in good faith, with the results of such investigation. Each Party agrees that it shall notify the other Party in writing immediately in the event that it discovers one of its employees working on the Premises is a possible security risk. Upon request of the other Party, the Party who is the employer shall discipline consistent with its employment practices, up to and including removal from BellSouth's Premises, any employee found to have violated the security and safety requirements of this Section.

13.8 Use of Supplies. Unauthorized use of equipment, supplies or other property by either Party, whether or not used routinely to provide telephone service will be strictly prohibited and handled appropriately. Costs associated with such unauthorized use may be charged to the offending Party, as may be all associated investigative costs.

13.9 Use of Official Lines. Except for non-toll calls necessary in the performance of their work, neither Party shall use the telephones of the other Party on the Premises. Charges for unauthorized telephone calls may be charged to the offending Party, as may be all associated investigative costs.

13.10 Accountability. Full compliance with the Security requirements of this Section shall in no way limit the accountability of either Party to the other for the improper actions of its employees.

13.11 BellSouth will use its best efforts to adequately secure the area which houses KMC III's equipment to prevent unauthorized entry. BellSouth will immediately notify KMC III's emergency contact of any actual or attempted security breaches to the KMC III's collocation space to the extent BellSouth becomes aware of such breaches.

14. Destruction of Collocation Space

14.1 In the event a Collocation Space is wholly or partially damaged by fire, windstorm, tornado, flood or by similar Acts of God or force majeure circumstances beyond a Party's reasonable control to such an extent as to be rendered wholly unsuitable for

KMC III's permitted use hereunder, then either Party may elect within ten (10) days after such damage, to terminate occupancy of the damaged Collocation Space, and if either Party shall so elect, by giving the other written notice of termination, both Parties shall stand released of and from further liability under the terms hereof. If the Collocation Space shall suffer only minor damage and shall not be rendered wholly unsuitable for KMC III's permitted use, or is damaged and the option to terminate is not exercised by either Party, BellSouth covenants and agrees to proceed promptly without expense to KMC III, except for improvements not to the property of BellSouth, to repair the damage. BellSouth shall have a reasonable time within which to rebuild or make any repairs, and such rebuilding and repairing shall be subject to delays caused by storms, shortages of labor and materials, government regulations, strikes, walkouts, and causes beyond the control of BellSouth, which causes shall not be construed as limiting factors, but as exemplary only. KMC III may, at its own expense, accelerate the rebuild of its collocated space and equipment provided however that a BellSouth Certified Supplier is used and the necessary space preparation has been completed. If KMC III's acceleration of the project increases the cost of the project, then those additional charges will be incurred by KMC III. Where allowed and where practical, KMC III may erect a temporary facility while BellSouth rebuilds or makes repairs. In all cases where the Collocation Space shall be rebuilt or repaired, KMC III shall be entitled to an equitable abatement of rent and other charges, depending upon the unsuitability of the Collocation Space for KMC III's permitted use, until such Collocation Space and access to necessary power is fully repaired and restored and KMC III's equipment installed therein (but in no event later than thirty (30) days after the Collocation Space is fully repaired and restored). Where KMC III has placed an Adjacent Arrangement pursuant to Section 3.4 above, KMC III shall have the sole responsibility to repair or replace said Adjacent Arrangement provided herein. Pursuant to this Section, BellSouth will restore the associated services to the Adjacent Arrangement.

15. Eminent Domain

15.1 If the whole of a Collocation Space or Adjacent Arrangement shall be taken by any public authority under the power of eminent domain, then this Attachment shall terminate with respect to such Collocation Space or Adjacent Arrangement as of the day possession shall be taken by such public authority and rent and other charges for the Collocation Space or Adjacent Arrangement shall be paid up to that day, or the day upon which the Collocation Space can no longer be used for interconnection and access to unbundled network elements, whichever is earlier, with proportionate refund by BellSouth of such rent and charges as may have been paid in advance for a period subsequent to the date of the taking. If any part of the Collocation Space or Adjacent Arrangement shall be taken under eminent domain, BellSouth and KMC III shall each have the right to terminate this Attachment with respect to such Collocation Space or Adjacent Arrangement and declare the same null and void, by written notice of such intention to the other Party within ten (10) days after such taking.

16. Nonexclusivity

16.1 KMC III understands that this Attachment is not exclusive and that BellSouth may enter into similar agreements with other Parties. Assignment of space pursuant to all such agreements shall be determined by space availability and made on a first come, first served basis**.**

17. Notice of Non-Emergency Work

17.1 BellSouth shall provide KMC III with written notice three (3) business days prior to those instances where BellSouth or its subcontractors may be performing non-emergency work that has a substantial likelihood of directly affecting the Collocation Space occupied by KMC III, or that is directly related to circuits that support KMC III equipment. BellSouth will inform KMC III by telephone of emergency related activity that BellSouth or its subcontractors may be performing that has a substantial likelihood of directly affecting the Collocation Space occupied by KMC III, or is directly related to circuits that support KMC III equipment. Notification of any emergency related activity shall be made as soon as practicable after BellSouth learns that such emergency activity is necessary so that KMC III can take any action required to monitor or protect its service.

ENVIRONMENTAL AND SAFETY PRINCIPLES

The following principles provide basic guidance on environmental and safety issues when applying for and establishing Collocation arrangements.

1. GENERAL PRINCIPLES

1.1 Compliance with Applicable Law. BellSouth and KMC III agree to comply with applicable federal, state, and local environmental and safety laws and regulations including U.S. Environmental Protection Agency (USEPA) regulations issued under the Clean Air Act (CAA), Clean Water Act (CWA), Resource Conservation and Recovery Act (RCRA), Comprehensive Environmental Response, Compensation and Liability Act (CERCLA), Superfund Amendments and Reauthorization Act (SARA), the Toxic Substances Control Act (TSCA), and OSHA regulations issued under the Occupational Safety and Health Act of 1970, as amended and NFPA and National Electrical Codes (NEC) and the NESC (Applicable Laws). Each Party shall notify the other if compliance inspections are conducted by regulatory agencies and/or citations are issued that relate to any aspect of this Attachment.

1.2 Notice. BellSouth and KMC III shall provide notice to the other, including Material Safety Data Sheets (MSDSs), of known and recognized physical hazards or Hazardous Chemicals existing on site or brought on site. A Hazardous Chemical inventory list is posted on an OSHA Poster and updated annually at each Central Office. This Poster is normally located near the front entrance of the building or in the lounge area. Each Party is required to provide specific notice for known potential Imminent Danger conditions. KMC III should contact 1-800-743-6737 for any BellSouth MSDS required.

1.3 Practices/Procedures. BellSouth may make available additional environmental control procedures for KMC III to follow when working at a Premises (See Section 2, below). These practices/procedures will represent the regular work practices required to be followed by the employees and suppliers of BellSouth for environmental protection. KMC III will require its suppliers, agents and others accessing the Premises to comply with these practices. Section 2 lists the Environmental categories where BST practices should be followed by KMC III when operating in the Premises.

1.4 Environmental and Safety Inspections. BellSouth reserves the right to inspect the KMC III space with proper notification. BellSouth reserves the right to stop any KMC III work operation that imposes Imminent Danger to the environment, employees or other persons in the area or Premises.

1.5 Hazardous Materials Brought On Site. Any hazardous materials brought into, used, stored or abandoned at the Premises by KMC III are owned by KMC III. KMC III will indemnify BellSouth for claims, lawsuits or damages to persons or property caused by these materials. Without prior written BellSouth approval, no substantial

new safety or environmental hazards can be created by KMC III or different hazardous materials used by KMC III at Premises. KMC III must demonstrate adequate emergency response capabilities for its materials used or remaining at the Premises.

1.6 Spills and Releases. When contamination is discovered at a Premises, either Party discovering the condition must notify the other Party. All Spills or Releases of regulated materials will immediately be reported by KMC III to BellSouth.

1.7 Coordinated Environmental Plans and Permits. BellSouth and KMC III will coordinate plans, permits or information required to be submitted to government agencies, such as emergency response plans, spill prevention control and countermeasures (SPCC) plans and community reporting. If fees are associated with filing, BellSouth and KMC III will develop a cost sharing procedure. If BellSouth's permit or EPA identification number must be used, KMC III must comply with all of BellSouth's permit conditions and environmental processes, including environmental "best management practices (BMP)" (see Section 2, below) and/or selection of BST disposition vendors and disposal sites.

1.8 Environmental and Safety Indemnification. BellSouth and KMC III shall indemnify, defend and hold harmless the other Party from and against any claims (including, without limitation, third-party claims for personal injury or death or real or personal property damage), judgments, damages (including direct and indirect damages and punitive damages), penalties, fines, forfeitures, costs, liabilities, interest and losses arising in connection with the violation or alleged violation of any Applicable Law or contractual obligation or the presence or alleged presence of contamination arising out of the acts or omissions of the indemnifying Party, its agents, suppliers, or employees concerning its operations at the Premises.

2. CATEGORIES FOR CONSIDERATION OF ENVIRONMENTAL ISSUES

2.1 When performing functions that fall under the following Environmental categories on BellSouth's Premises, KMC III agrees to comply with the applicable sections of the current issue of BellSouth's Environmental and Safety Methods and Procedures (M&Ps), incorporated herein by this reference. KMC III further agrees to cooperate with BellSouth to ensure that KMC III's employees, agents, and/or suppliers are knowledgeable of and satisfy those provisions of BellSouth's Environmental M&Ps which apply to the specific Environmental function being performed by KMC III, its employees, agents and/or suppliers.

2.2 The most current version of the reference documentation must be requested from KMC III's BellSouth Regional Contract Manager (RCM) (f/k/a Account Team Collocation Coordinator – ATCC).

ENVIRONMENTAL CATEGORIES	ENVIRONMENTAL ISSUES	ADDRESSED BY THE FOLLOWING DOCUMENTATION
Disposal of hazardous material or other regulated material (e.g., batteries, fluorescent tubes, solvents & cleaning materials)	Compliance with all applicable local, state, & federal laws and regulations Pollution liability insurance EVET approval of supplier	Std T&C 450 Fact Sheet Series 17000 Std T&C 660-3 Approved Environmental Vendor List (Contact RCM Representative)
Emergency response	Hazmat/waste release/spill fire safety emergency	Fact Sheet Series 17000 Building Emergency Operations Plan (EOP) (specific to and located on Premises)
Contract labor/outsourcing for services with environmental implications to be performed on BellSouth Premises (e.g., disposition of hazardous material/waste; maintenance of storage tanks)	Compliance with all applicable local, state, & federal laws and regulations Performance of services in accordance with BST's environmental M&Ps Insurance	Std T&C 450 Std T&C 450-B (Contact RCM Representative for copy of appropriate E/S M&Ps.) Std T&C 660
Transportation of hazardous material	Compliance with all applicable local, state, & federal laws and regulations Pollution liability insurance EVET approval of supplier	Std T&C 450 Fact Sheet Series 17000 Std T&C 660-3 Approved Environmental Vendor List (Contact RCM Representative)
Maintenance/operations work which may produce a waste Other maintenance work	Compliance with all applicable local, state, & federal laws and regulations Protection of BST employees and equipment	Std T&C 450 29CFR 1910.147 (OSHA Standard) 29CFR 1910 Subpart O

		(OSHA Standard)
Janitorial services	All waste removal and disposal must conform to all applicable federal, state and local regulations All Hazardous Material and Waste Asbestos notification and protection of employees and equipment	Procurement Manager (CRES Related Matters)-BST Supply Chain Services Fact Sheet Series 17000 GU-BTEN-001BT, Chapter 3 BSP 010-170-001BS (Hazcom)
Manhole cleaning	Compliance with all applicable local, state, & federal laws and regulations Pollution liability insurance EVET approval of supplier	Std T&C 450 Fact Sheet 14050 BSP 620-145-011PR Issue A, August 1996 Std T&C 660-3 Approved Environmental Vendor List (Contact RCM Representative)
Removing or disturbing building materials that may contain asbestos	Asbestos work practices	GU-BTEN-001BT, Chapter 3 For questions regarding removing or disturbing materials that contain asbestos, call the BellSouth Building Service Center: AL, MS, TN, KY & LA (local area code) 557-6194 FL, GA, NC & SC (local area code) 780-2740

3. DEFINITIONS

Generator. Under RCRA, the person whose act produces a Hazardous Waste, as defined in 40 C.F.R. § 261, or whose act first causes a Hazardous Waste to become subject to regulation. The Generator is legally responsible for the proper management and disposal of Hazardous Wastes in accordance with regulations.

Hazardous Chemical. As defined in the U.S. Occupational Safety and Health (OSHA) hazard communication standard (29 C.F.R. § 1910.1200), any chemical which is a health hazard or physical hazard.

Hazardous Waste. As defined in Section 1004 of RCRA.

Imminent Danger. Any conditions or practices at a Premises which are such that a danger exists which could reasonably be expected to cause immediate death or serious harm to people or immediate significant damage to the environment or natural resources.

Spill or Release. As defined in Section 101 of CERCLA.

4. ACRONYMS

RCM – Regional Collocation Manager (f/k/a Account Team Collocation Coordinator)

BST – BellSouth Telecommunications

CRES – Corporate Real Estate and Services (formerly PS&M)

DEC/LDEC - Department Environmental Coordinator/Local Department Environmental Coordinator

E/S – Environmental/Safety

EVET - Environmental Vendor Evaluation Team

GU-BTEN-001BT - BellSouth Environmental Methods and Procedures

NESC - National Electrical Safety Codes

P&SM - Property & Services Management

Std T&C - Standard Terms & Conditions

COLLOCATION - Alabama														Attachment: 4		Exhibit: B	
CATEGORY		RATE ELEMENTS	Interim	Zone	BCS	USOC	RATES ($)					Svc Order Submitted Elec per LSR	Svc Order Submitted Manually per LSR	Incremental Charge - Manual Svc Order vs. Electronic-1st	Incremental Charge - Manual Svc Order vs. Electronic-Add'l	Incremental Charge - Manual Svc Order vs. Electronic-Disc 1st	Incremental Charge - Manual Svc Order vs. Electronic-Disc Add'l
							Rec	Nonrecurring		Nonrecurring Disconnect		OSS Rates ($)					
								First	Add'l	First	Add'l	SOMEC	SOMAN	SOMAN	SOMAN	SOMAN	SOMAN
PHYSICAL COLLOCATION																	
		Physical Collocation 2-Wire Cross Connect, Exchange Port 2-Wire Analog - Res			UEPSR	PE1R2	0.03	12.30	11.80	6.03	5.44						
		Physical Collocation 2-Wire Cross Connect, Exchange Port 2-Wire Line Side PBX Trunk - Bus			UEPSP	PE1R2	0.03	12.30	11.80	6.03	5.44						
		Physical Collocation 2-Wire Cross Connect, Exchange Port 2-Wire Voice Grade PBX Trunk - Res			UEPSE	PE1R2	0.03	12.30	11.80	6.03	5.44						
		Physical Collocation 2-Wire Cross Connect, Exchange Port 2-Wire Analog - Bus			UEPSB	PE1R2	0.03	12.30	11.80	6.03	5.44						
		Physical Collocation 2-Wire Cross Connect, Exchange Port 2-Wire ISDN			UEPSX	PE1R2	0.03	12.30	11.80	6.03	5.44						
		Physical Collocation 4-Wire Cross Connect, Exchange Port 4-Wire ISDN DS1			UEPEX	PE1R4	0.05	12.39	11.87	6.39	5.73						
PHYSICAL COLLOCATION																	
		Physical Collocation - Initial Application Fee			CLO	PE1BA		1,879.48		0.51							
		Physical Collocation - Subsequent Application Fee			CLO	PE1CA		1,566.60		0.51							
		Physical Collocation Administrative Only - Application Fee			CLO	PE1BL		742.15									
		Physical Collocation - Space Preparation - Firm Order Processing			CLO	PE1SJ		600.71									
		Physical Collocation - Space Preparation - C.O. Modification per square ft.			CLO	PE1SK	1.96										
		Physical Collocation - Space Preparation, Common Systems Modifications-Cageless, per square foot			CLO	PE1SL	2.62										
		Physical Collocation - Space Preparation - Common Systems Modifications-Caged, per cage			CLO	PE1SM	88.86										
		Physical Collocation - Cable Installation, Pricing, non-recurring charge, per Entrance Cable			CLO	PE1BD		859.71		22.49							
		Physical Collocation - Floor Space, per sq feet			CLO	PE1PJ	3.22										
		Physical Collocation - Cable Support Structure, per Entrance Cable			CLO	PE1PM	17.11										
		Physical Collocation - Power, -48V DC Power - per Fused Amp Requested			CLO	PE1PL	7.83										
		Physical Collocation - Power, -48V DC Power, Grandathered Site, per Fused Amp Requested			CLO	PE1FT	3.05										
		Physical Collocation - Power, - 48V DC Power, Measured AC Usage, per Used Amp, per Power Feed ("A" or "B" Feed)			CLO	PE1FU	2.93										
		Physical Collocation - Power, -48V DC Power, Infrastructure Capital and Expense Costs, per Fused Amp Requested			CLO	PE1FV	5.88										
		Physical Collocation - Power, -48V DC Power, Grandfathered Site, Infrastructure Expense Costs, per Fused Amp Requested			CLO	PE1FW	1.10										
		Physical Collocation - Power, -48V DC Power, Meter Reading - per CLEC per CO, First 12 Circuits w/BST Meter			CLO	PE1FO	102.24										
		Physical Collocation - Power, -48V DC Power, Meter Reading - per CLEC per CO, per Each Additional 2 Circuits w/BST meter			CLO	PE1FP	8.94										
		Physical Collocation - Power, -48V DC Power, Meter Reading - per CLEC per CO, First 12 Circuits w/CLEC Meter			CLO	PE1FQ	98.25										
		Physical Collocation - Power, -48V DC Power, Meter Reading - per CLEC per CO, per Each Additional 2 Circuits w/CLEC Meter			CLO	PE1FR	8.94										
		Physical Collocation - Power, -48V DC Power, Additional Meter Reading Trip Charge, per Central Office per Occurrence			CLO	PE1FM		307.64									
		Physical Collocation - Power, 120V AC Power, Single Phase, per Breaker Amp			CLO	PE1FB	4.91										
		Physical Collocation - Power, 240V AC Power, Single Phase, per Breaker Amp			CLO	PE1FD	9.84										
		Physical Collocation - Power, 120V AC Power, Three Phase, per Breaker Amp			CLO	PE1FE	14.74										

COLLOCATION - Alabama														Attachment: 4		Exhibit: B	
CATEGORY		RATE ELEMENTS	Interim	Zone	BCS	USOC	RATES ($)					Svc Order Submitted Elec per LSR	Svc Order Submitted Manually per LSR	Incremental Charge - Manual Svc Order vs. Electronic-1st	Incremental Charge - Manual Svc Order vs. Electronic-Add'l	Incremental Charge - Manual Svc Order vs. Electronic-Disc 1st	Incremental Charge - Manual Svc Order vs. Electronic-Disc Add'l
							Rec	Nonrecurring		Nonrecurring Disconnect		OSS Rates ($)					
								First	Add'l	First	Add'l	SOMEC	SOMAN	SOMAN	SOMAN	SOMAN	SOMAN
		Physical Collocation - Power, 277V AC Power, Three Phase, per Breaker Amp			CLO	PE1FG	34.06										
		Physical Collocation - 2-wire cross-connect, loop, provisioning			UEANL,UEQ, UNCNX, UEA, UCL, UAL, UHL, UDC, UDN, UNCVX	PE1P2	0.03	12.30	11.80	6.03	5.44						
		Physical Collocation - 4-wire cross-connect, loop, provisioning			UEA, UHL, UNCVX, UNCDX, UCL, UDL	PE1P4	0.05	12.39	11.87	6.39	5.73						
		Physical Collocation -DS1 Cross-Connect for Physical Collocation, provisioning			WDS1L,WDS1S, UXTD1, ULDD1, USLEL, UNLD1, UEPEX, UEPDX, USL, U1TD1, UNC1X	PE1P1	1.11	22.03	15.93	6.40	5.79						
		Physical Collocation - DS3 Cross-Connect, provisioning			UE3,U1TD3, UXTD3, UXTS1, UNC3X, UNCSX, ULDD3, U1TS1,ULDS1, UNLD3	PE1P3	14.16	20.89	15.20	7.38	5.92						
		Physical Collocation - 2-Fiber Cross-Connect			CLO, ULDO3, ULD12, ULD48, U1TO3, U1T12, U1T48, UDLO3, UDL12, UDF	PE1F2	2.81	20.89	15.20	7.38	5.92						
		Physical Collocation - 4-Fiber Cross-Connect			ULDO3, ULD12, ULD48, U1TO3, U1T12, U1T48, UDLO3, UDL12, UDF	PE1F4	4.99	25.55	19.86	9.71	8.25						
		Physical Collocation - Space enclosure, welded wire, first 100 square feet			CLO	PE1BW	156.33										
		Physical Collocation - Space enclosure, welded wire, 50 square feet			CLO	PE1BX	140.99										
		Physical Collocation - Space enclosure, welded wire, each additional 50 square feet			CLO	PE1CW	15.34										
		Physical Collocation - Security Access System - Security System per Central Office			CLO	PE1AX	45.70										
		Physical Collocation -Security Access System - New Card Activation, per Card Activation (First), per State			CLO	PE1A1	0.05	27.79									
		Physical Collocation-Security Access System-Administrative Change, existing Access Card, per Request, per State, per Card			CLO	PE1AA		7.79									
		Physical Collocation - Security Access System - Replace Lost or Stolen Card, per Card			CLO	PE1AR		22.78									
		Physical Collocation - Security Access - Initial Key, per Key			CLO	PE1AK		13.10									
		Physical Collocation - Security Access - Key, Replace Lost or Stolen Key, per Key			CLO	PE1AL		13.10									
		Physical Collocation - Space Availability Report, per Central Office Requested			CLO	PE1SR		1,075.17									
		Physical Collocation - CFA Information Resend Request, per premises, per request, per arrangement			CLO	PE1C9		77.56									
		Physical Collocation - Cable Records, per request			CLO	PE1CR		I 759.29	S 488.11	133.00							
		Physical Collocation, Cable Records, VG/DS0 Cable, per cable record (maximum 3600 records)			CLO	PE1CD		326.92		189.12							
		Physical Collocation, Cable Records, VG/DS0 Cable, per each 100 pair			CLO	PE1CO		4.81		5.90							
		Physical Collocation, Cable Records, DS1, per T1 TIE			CLO	PE1C1		2.25		2.76							
		Physical Collocation, Cable Records, DS3, per T3 TIE			CLO	PE1C3		7.88		9.66							

COLLOCATION - Alabama														Attachment: 4		Exhibit: B	
CATEGORY		RATE ELEMENTS	Interim	Zone	BCS	USOC	RATES ($)					Svc Order Submitted Elec per LSR	Svc Order Submitted Manually per LSR	Incremental Charge - Manual Svc Order vs. Electronic-1st	Incremental Charge - Manual Svc Order vs. Electronic-Add'l	Incremental Charge - Manual Svc Order vs. Electronic-Disc 1st	Incremental Charge - Manual Svc Order vs. Electronic-Disc Add'l
							Rec	Nonrecurring		Nonrecurring Disconnect		OSS Rates ($)					
								First	Add'l	First	Add'l	SOMEC	SOMAN	SOMAN	SOMAN	SOMAN	SOMAN
		Physical Collocation - Cable Records, Fiber Cable, per cable record (maximum 99 records)			CLO	PE1CB		84.49		77.13							
		Physical Collocation - Security Escort for Basic Time - normally scheduled work, per half hour			CLO	PE1BT		16.93	10.73								
		Physical Collocation - Security Escort for Overtime - outside of normally scheduled working hours on a scheduled work day, per half hour			CLO	PE1OT		22.05	13.86								
		Physical Collocation - Security Escort for Premium Time - outside of scheduled work day, per half hour			CLO	PE1PT		27.17	16.98								
		Physical Collocation - Virtual to Physical Collocation Relocation, per Voice Grade Circuit			CLO	PE1BV		33.00									
		Physical Collocation - Virtual to Physical Collocation Relocation, per DSO Circuit			CLO	PE1BO		33.00									
		Physical Collocation - Virtual to Physical Collocation Relocation, per DS1 Circuit			CLO	PE1B1		52.00									
		Physical Collocation - Virtual to Physical Collocation Relocation, per DS3 Circuit			CLO	PE1B3		52.00									
		Physical Collocation - Virtual to Physical Collocation In-Place, Per Voice Grade Circuit			CLO	PE1BR		23.00									
		Physical Collocation Virtual to Physical Collocation In-Place, Per DSO Circuit			CLO	PE1BP		23.00									
		Physical Collocation - Virtual to Physical Collocation In-Place, Per DS1 Circuit			CLO	PE1BS		33.00									
		Physical Collocation - Virtual to Physical Collocation In-Place, per DS3 Circuit			CLO	PE1BE		37.00									
		Physical Collocation - Co-Carrier Cross Connects/Direct Connect - Fiber Cable Support Structure, per linear ft., per cable			CLO	PE1ES	0.0011										
		Physical Collocation - Co-Carrier Cross Connect/Direct Connect - Copper/Coax Cable Support Structure, per lin. ft., per cable			CLO	PE1DS	0.0016										
		Physical Collocation - Co-Carrier Cross Connects/Direct Connect, Application Fee, per application			CLO	PE1DT		584.22									
		Physical Collocation - Application Cost, Simple Augment			CLO	PE1KS		594.41		1.21							
		Physical Collocation - Application Cost, Minor Augment			CLO	PE1KM		833.47		1.21							
		Physical Collocation - Application Cost, Intermediate Augment			CLO	PE1K1		1,058.00		1.21							
		Physical Collocation - Application Cost, Major Augment			CLO	PE1KJ		2,410.00		1.21							
ADJACENT COLLOCATION																	
		Adjacent Collocation - Space Charge per Sq. Ft.			CLOAC	PE1JA	0.14										
		Adjacent Collocation - Electrical Facility Charge per Linear Ft.			CLOAC	PE1JC	5.41										
		Adjacent Collocation - 2-Wire Cross-Connects			UEA,UHL,UDL,UCL	PE1JE	0.02	12.30	11.80	6.03	5.44						
		Adjacent Collocation - 4-Wire Cross-Connects			UEA,UHL,UDL,UCL	PE1JF	0.04	12.39	11.87	6.39	5.73						
		Adjacent Collocation - DS1 Cross-Connects			USL	PE1JG	1.03	22.03	15.93	6.40	5.79						
		Adjacent Collocation - DS3 Cross-Connects			UEA,UHL,UDL,UCL	PE1JH	13.95	20.89	15.20	7.38	5.92						
		Adjacent Collocation - 2-Fiber Cross-Connect			CLOAC	PE1JJ	2.36	20.89	15.20	7.38	5.92						
		Adjacent Collocation - 4-Fiber Cross-Connect			CLOAC	PE1JK	4.52	25.55	19.86	9.71	8.25						
		Adjacent Collocation - Application Fee			CLOAC	PE1JB		1,576.69		0.51							
		Adjacent Collocation - 120V, Single Phase Standby Power Rate per AC Breaker Amp			CLOAC	PE1JL	4.91										
		Adjacent Collocation - 240V, Single Phase Standby Power Rate per AC Breaker Amp			CLOAC	PE1JM	9.84										
		Adjacent Collocation - 120V, Three Phase Standby Power Rate per AC Breaker Amp			CLOAC	PE1JN	14.74										
		Adjacent Collocation - 277V, Three Phase Standby Power Rate per AC Breaker Amp			CLOAC	PE1JO	34.06										
PHYSICAL COLLOCATION IN THE REMOTE SITE																	
		Physical Collocation in the Remote Site - Application Fee			CLORS	PE1RA		307.70		168.22							
		Cabinet Space in the Remote Site per Bay/ Rack			CLORS	PE1RB	201.42										

COLLOCATION - Alabama														Attachment: 4		Exhibit: B	
CATEGORY		RATE ELEMENTS	Interim	Zone	BCS	USOC	RATES ($)					Svc Order Submitted Elec per LSR	Svc Order Submitted Manually per LSR	Incremental Charge - Manual Svc Order vs. Electronic-1st	Incremental Charge - Manual Svc Order vs. Electronic-Add'l	Incremental Charge - Manual Svc Order vs. Electronic-Disc 1st	Incremental Charge - Manual Svc Order vs. Electronic-Disc Add'l
							Rec	Nonrecurring		Nonrecurring Disconnect		OSS Rates ($)					
								First	Add'l	First	Add'l	SOMEC	SOMAN	SOMAN	SOMAN	SOMAN	SOMAN
		Physical Collocation in the Remote Site - Security Access - Key			CLORS	PE1RD		13.10									
		Physical Collocation in the Remote Site - Space Availability Report per Premises Requested			CLORS	PE1SR		115.87									
		Physical Collocation in the Remote Site - Remote Site CLLI Code Request, per CLLI Code Requested			CLORS	PE1RE		37.56									
		Remote Site DLEC Data (BRSDD), per Compact Disk, per CO			CLORS	PE1RR		233.38									
		Physical Collocation - Security Escort for Basic Time - normally scheduled work, per half hour			CLORS	PE1BT		16.93	10.73								
		Physical Collocation - Security Escort for Overtime - outside of normally scheduled working hours on a scheduled work day, per half hour			CLORS	PE1OT		22.05	13.86								
		Physical Collocation - Security Escort for Premium Time - outside of scheduled work day, per half hour			CLORS	PE1PT		27.17	16.98								
PHYSICAL COLLOCATION IN THE REMOTE SITE - ADJACENT																	
		Remote Site-Adjacent Collocation - AC Power, per breaker amp			CLORS	PE1RS	6.27										
		Remote Site-Adjacent Collocation - Real Estate, per square foot			CLORS	PE1RT	0.134										
		Remote Site-Adjacent Collocation-Application Fee			CLORS	PE1RU		755.62	755.62								
	NOTE: If Security Escort and/or Add'l Engineering Fees become necessary for remote site collocation, the Parties will negotiate appropriate rates.																
VIRTUAL REMOTE SITE COLLOCATION																	
		Virtual Collocation in the Remote Site - Application Fee			VE1RS	VE1RB		307.70	307.70	168.22	168.22						
		Virtual Collocation in the Remote Site - Per Bay/Rack of Space			VE1RS	VE1RC	201.42										
		Virtual Collocation in the Remote Site - Space Availability Report per Premises requested			VE1RS	VE1RR		115.87	115.87								
		Virtual Collocation in the Remote Site - Remote Site CLLI Code Request, per CLLI Code Requested			VE1RS	VE1RL		37.56	37.56								
VIRTUAL COLLOCATION																	
		Virtual Collocation - Application Fee			AMTFS	EAF		1,205.26		0.51							
		Virtual Collocation Administrative Only - Application Fee			AMTFS	VE1AF		742.15									
		Virtual Collocation - Cable Installation Cost, per cable			AMTFS	ESPCX		859.71		22.49							
		Virtual Collocation - Floor Space, per sq. ft.			AMTFS	ESPVX	3.22										
		Virtual Collocation - Power, per fused amp			AMTFS	ESPAX	7.83										
		Virtual Collocation - Cable Support Structure, per entrance cable			AMTFS	ESPSX	14.97										
		Virtual Collocation - 2-wire Cross Connects (loop)			UEANL,UEA,UDN,UDC,UAL,UHL,UCL,UEQ, UNCVX, UNCDX, UNCNX	UEAC2	0.03	12.30	11.80	6.03	5.44						
		Virtual Collocation - 4-wire Cross Connects (loop)			UEA,UHL,UCL,UDL, UAL, UDN, UNCVX, UNCDX	UEAC4	0.05	12.39	11.87	6.39	5.73						
		Virtual Collocation - 2-Fiber Cross Connects			UDL12, UDLO3, U1T48, U1T12, U1TO3, ULDO3, ULD12, ULD48, UDF	CNC2F	2.84	20.89	15.20	7.38	5.92						
		Virtual Collocation - 4-Fiber Cross Connects			UDL12, UDLO3, U1T48, U1T12, U1TO3, ULDO3, ULD12, ULD48, UDF	CNC4F	5.69	25.55	19.86	9.71	8.25						
		Virtual collocation - Special Access & UNE, cross-connect per DS1			USL, ULR, UXTD1, UNC1X, ULDD1, U1TD1, USLEL, UNLD1, UEPEX, UEPDX	CNC1X	1.11	22.03	15.93	6.40	5.79						

COLLOCATION - Alabama														Attachment: 4		Exhibit: B	
CATEGORY	RATE ELEMENTS	Interim	Zone	BCS	USOC	RATES ($)					Svc Order Submitted Elec per LSR	Svc Order Submitted Manually per LSR	Incremental Charge - Manual Svc Order vs. Electronic-1st	Incremental Charge - Manual Svc Order vs. Electronic-Add'l	Incremental Charge - Manual Svc Order vs. Electronic-Disc 1st	Incremental Charge - Manual Svc Order vs. Electronic-Disc Add'l
						Rec	Nonrecurring		Nonrecurring Disconnect		OSS Rates ($)					
							First	Add'l	First	Add'l	SOMEC	SOMAN	SOMAN	SOMAN	SOMAN	SOMAN
	Virtual collocation - Special Access & UNE, cross-connect per DS3			USL,UE3, U1TD3, UXTS1, UXTD3, UNC3X, UNCSX, ULDD3, U1TS1, ULDS1, UDLSX, UNLD3	CND3X	14.16	20.89	15.20	7.38	5.92						
	Virtual Collocation - Co-Carrier Cross Connects/Direct Connect - Fiber Cable Support Structure, per linear foot, per cable			AMTFS	VE1CB	0.0011										
	Virtual Collocation - Co-Carrier Cross Connects/Direct Connect - Copper/Coax Cable Support Structure, per linear ft, per cable			AMTFS	VE1CD	0.0016										
	Virtual Collocation - Co-Carrier Cross Connects/Direct Connect, Application Fee, per application			AMTFS	VE1CA		584.22									
	Virtual Collocation - CFA Information Resend Request, per Premises, per Arrangement, per request			AMTFS	VE1QR		77.56									
	Virtual Collocation Cable Records - per request			AMTFS	VE1BA		I 759.29	S 488.11	133.00							
	Virtual Collocation Cable Records - VG/DS0 Cable, per cable record			AMTFS	VE1BB		326.92	326.92	189.12							
	Virtual Collocaiton Cable Records - VG/DS0 Cable, per each 100 pair			AMTFS	VE1BC		4.81		5.90							
	Virtual Collocation Cable Records - DS1, per T1TIE			AMTFS	VE1BD		2.25		2.76							
	Virtual Collocation Cable Records - DS3, per T3TIE			AMTFS	VE1BE		7.88		9.66							
	Virtual Collocation Cable Records - Fiber Cable, per 99 fiber records			AMTFS	VE1BF		84.49		77.13							
	Virtual collocation - Security Escort - Basic, per half hour			AMTFS	SPTBX		16.93	10.73								
	Virtual collocation - Security Escort - Overtime, per half hour			AMTFS	SPTOX		22.05	13.86								
	Virtual collocation - Security Escort - Premium, per half hour			AMTFS	SPTPX		27.17	16.98								
	Virtual collocation - Maintenance in CO - Basic, per half hour			AMTFS	CTRLX		27.93	10.73								
	Virtual collocation - Maintenance in CO - Overtime, per half hour			AMTFS	SPTOM		36.47	13.86								
	Virtual collocation - Maintenance in CO - Premium per half hour			AMTFS	SPTPM		45.02	16.98								
VIRTUAL COLLOCATION																
	Virtual Collocation - 2-wire Cross Connect, Exchange Port 2-Wire Analog - Res			UEPSR	VE1R2	0.03	12.30	11.80	6.03	5.44						
	Virtual Collocation 2-Wire Cross Connect, Exchange Port 2-Wire Line Side PBX Trunk - Bus			UEPSP	VE1R2	0.03	12.30	11.80	6.03	5.44						
	Virtual Collocation 2-Wire Cross Connect, Exchange Port 2-Wire Voice Grade PBX Trunk - Res			UEPSE	VE1R2	0.03	12.30	11.80	6.03	5.44						
	Virtual Collocation 2-Wire Cross Connect, Exchange Port 2-Wire Analog Bus			UEPSB	VE1R2	0.03	12.30	11.80	6.03	5.44						
	Virtual Collocation 2-Wire Cross Connect, Exchnage Port 2-Wire ISDN			UEPSX	VE1R2	0.03	12.30	11.80	6.03	5.44						
	Virtual Collocation 4-Wire Cross Connect, Exchange Port 4-Wire ISDN DS1			UEPEX	VE1R4	0.05	12.39	11.87	6.39	5.44						
	Note: Rates displaying an "I" in the Interim column are interim as a result of a Commission order.															

COLLOCATION - Florida

CATEGORY		RATE ELEMENTS	Interim	Zone	BCS	USOC	RATES ($)					Svc Order Submitted Elec per LSR	Svc Order Submitted Manually per LSR
							Rec	Nonrecurring		Nonrecurring Disconnect			
								First	Add'l	First	Add'l	SOMEC	SOMAN
PHYSICAL COLLOCATION													
		Physical Collocation 2-Wire Cross Connect, Exchange Port 2-Wire Analog - Res			UEPSR	PE1R2	0.0276	8.22	7.22				
		Physical Collocation 2-Wire Cross Connect, Exchange Port 2-Wire Line Side PBX Trunk - Bus			UEPSP	PE1R2	0.0276	8.22	7.22				
		Physical Collocation 2-Wire Cross Connect, Exchange Port 2-Wire Voice Grade PBX Trunk - Res			UEPSE	PE1R2	0.0276	8.22	7.22				
		Physical Collocation 2-Wire Cross Connect, Exchange Port 2-Wire Analog - Bus			UEPSB	PE1R2	0.0276	8.22	7.22				
		Physical Collocation 2-Wire Cross Connect, Exchange Port 2-Wire ISDN			UEPSX	PE1R2	0.0276	8.22	7.22				
		Physical Collocation 4-Wire Cross Connect, Exchange Port 4-Wire ISDN DS1			UEPEX	PE1R4	0.0552	8.42	7.36				
PHYSICAL COLLOCATION													
		Physical Collocation - Initial Application Fee			CLO	PE1BA		2,597.00					
		Physical Collocation - Subsequent Application Fee			CLO	PE1CA		2,236.00					
		Physical Collocation Administrative Only - Application Fee			CLO	PE1BL		742.00					
		Physical Collocation - Space Preparation - Firm Order Processing			CLO	PE1SJ		288.93					
		Physical Collocation - Space Preparation - C.O. Modification per square ft.			CLO	PE1SK	2.38						
		Physical Collocation - Space Preparation - Common Systems Modifications-Caged, per cage			CLO	PE1SM	92.55						
		Physical Collocation - Cable Installation, Pricing, non-recurring charge, per Entrance Cable			CLO	PE1BD		1,750.00		45.16			
		Physical Collocation - Floor Space, per sq feet			CLO	PE1PJ	7.86						
		Physical Collocation - Cable Support Structure, per Entrance Cable			CLO	PE1PM	18.96						
		Physical Collocation - Power, -48V DC Power - per Fused Amp Requested			CLO	PE1PL	7.80						
		Physical Collocation - Power, -48V DC Power, Grandfathered Site, per Fused Amp Requested			CLO	PE1FT	3.29						
		Physical Collocation - Power, -48V DC Power, Measured AC Usage, per Used Amp, per Power Feed ("A" or "B" Feed)			CLO	PE1FU	3.36						
		Physical Collocation - Power, -48V DC Power, Infrastructure Capital and Expense Costs, per Fused Amp Requested			CLO	PE1FV	5.55						
		Physical Collocation - Power, -48V DC Power, Grandfathered Site, Infrastructure Expense Costs, per Fused Amp Requested			CLO	PE1FW	1.04						
		Physical Collocation - Power, -48V DC Power, Meter Reading - per CLEC per CO, First 12 Circuits w/BST Meter			CLO	PE1FO	102.24						
		Physical Collocation - Power, -48V DC Power, Meter Reading - per CLEC per CO, Each Additional 2 Circuits w/BST Meter			CLO	PE1FP	8.94						
		Physical Collocation - Power, -48V DC Power, Meter Reading - per CLEC per CO, First 12 Circuits w/CLEC Meter			CLO	PE1FQ	98.25						
		Physical Collocation - Power, -48V DC Power, Meter Reading - per CLEC per CO, Each Additional 2 Circuits w/CLEC Meter			CLO	PE1FR	8.94						

COLLOCATION - Florida

CATEGORY		RATE ELEMENTS	Interim	Zone	BCS	USOC	RATES ($)					Svc Order Submitted Elec per LSR	Svc Order Submitted Manually per LSR
							Rec	Nonrecurring		Nonrecurring Disconnect			
								First	Add'l	First	Add'l	SOMEC	SOMAN
		Physical Collocation - Power, -48V DC Power, Additional Meter Reading Trip Charge, per Central Office per Occurrence			CLO	PE1FM		307.64					
		Physical Collocation - Power Reconfiguration Only, Application Fee			CLO	PE1PR		399.43					
		Physical Collocation - Power, 120V AC Power, Single Phase, per Breaker Amp			CLO	PE1FB	5.38						
		Physical Collocation - Power, 240V AC Power, Single Phase, per Breaker Amp			CLO	PE1FD	10.77						
		Physical Collocation - Power, 120V AC Power, Three Phase, per Breaker Amp			CLO	PE1FE	16.15						
		Physical Collocation - Power, 277V AC Power, Three Phase, per Breaker Amp			CLO	PE1FG	37.30						
		Physical Collocation - 2-wire cross-connect, loop, provisioning			UEANL,UEQ, UNCNX, UEA, UCL, UAL, UHL, UDC, UDN, UNCVX	PE1P2	0.0276	8.22	7.22	5.74	4.58		
		Physical Collocation - 4-wire cross-connect, loop, provisioning			UEA, UHL, UNCVX, UNCDX, UCL, UDL	PE1P4	0.0552	8.42	7.36	5.90	4.66		
		Physical Collocation -DS1 Cross-Connect for Physical Collocation, provisioning			WDS1L,WDS1S, UXTD1, ULDD1, USLEL, UNLD1, UEPEX, UEPDX, USL, U1TD1, UNC1X	PE1P1	1.32	27.77	15.52	5.93	4.77		
		Physical Collocation - DS3 Cross-Connect, provisioning			UE3,U1TD3, UXTD3, UXTS1, UNC3X, UNCSX, ULDD3, U1TS1,ULDS1, UNLD3	PE1P3	16.81	25.48	14.05	7.77	5.01		
		Physical Collocation - 2-Fiber Cross-Connect			CLO, ULDO3, ULD12, ULD48, U1TO3, U1T12, U1T48, UDLO3, UDL12, UDF	PE1F2	3.34	41.94	30.52	13.91	11.16		
		Physical Collocation - 4-Fiber Cross-Connect			ULDO3, ULD12, ULD48, U1TO3, U1T12, U1T48, UDLO3, UDL12, UDF	PE1F4	5.92	51.30	39.87	18.29	15.54		
		Physical Collocation - Space enclosure, welded wire, first 100 square feet			CLO	PE1BW	189.45						
		Physical Collocation - Space enclosure, welded wire, 50 square feet			CLO	PE1BX	170.87						
		Physical Collocation - Space enclosure, welded wire, each additional 50 square feet			CLO	PE1CW	18.58						
		Physical Collocation - Security Access System - Security System per Central Office			CLO	PE1AY	0.0105						

COLLOCATION - Florida

CATEGORY		RATE ELEMENTS	Interim	Zone	BCS	USOC	RATES ($)					Svc Order Submitted Elec per LSR	Svc Order Submitted Manually per LSR
							Rec	Nonrecurring		Nonrecurring Disconnect			
								First	Add'l	First	Add'l	SOMEC	SOMAN
		Physical Collocation -Security Access System - New Card Activation, per Card Activation (First), per State			CLO	PE1A1	0.0577	55.80					
		Physical Collocation-Security Access System-Administrative Change, existing Access Card, per Request, per State, per Card			CLO	PE1AA		15.65					
		Physical Collocation - Security Access System - Replace Lost or Stolen Card, per Card			CLO	PE1AR		45.75					
		Physical Collocation - Security Access - Initial Key, per Key			CLO	PE1AK		26.30					
		Physical Collocation - Security Access - Key, Replace Lost or Stolen Key, per Key			CLO	PE1AL		26.30					
		Physical Collocation - Space Availability Report, per Central Office Requested			CLO	PE1SR		2,159.00					
		Physical Collocation - CFA Information Resend Request, per premises, per arrangement, per request			CLO	PE1C9		77.54					
		Physical Collocation - Cable Records, per request			CLO	PE1CR		I 1525	S 980.22	267.08			
		Physical Collocation, Cable Records, VG/DS0 Cable, per cable record (maximum 3600 records)			CLO	PE1CD		656.50		379.78			
		Physical Collocation, Cable Records, VG/DS0 Cable, per each 100 pair			CLO	PE1CO		9.66		11.84			
		Physical Collocation, Cable Records, DS1, per T1 TIE			CLO	PE1C1		4.52		5.54			
		Physical Collocation, Cable Records, DS3, per T3 TIE			CLO	PE1C3		15.82		19.40			
		Physical Collocation - Cable Records, Fiber Cable, per cable record (maximum 99 records)			CLO	PE1CB		169.67		154.89			
		Physical Collocation - Security Escort for Basic Time - normally scheduled work, per half hour			CLO	PE1BT		16.52	10.83				
		Physical Collocation - Security Escort for Overtime - outside of normally scheduled working hours on a scheduled work day, per half hour			CLO	PE1OT		21.92	14.19				
		Physical Collocation - Security Escort for Premium Time - outside of scheduled work day, per half hour			CLO	PE1PT		27.31	17.55				
		Physical Collocation - Virtual to Physical Collocation Relocation, per Voice Grade Circuit			CLO	PE1BV		33.00					
		Physical Collocation - Virtual to Physical Collocation Relocation, per DSO Circuit			CLO	PE1BO		33.00					
		Physical Collocation - Virtual to Physical Collocation Relocation, per DS1 Circuit			CLO	PE1B1		52.00					
		Physical Collocation - Virtual to Physical Collocation Relocation, per DS3 Circuit			CLO	PE1B3		52.00					
		Physical Collocation - Virtual to Physical Collocation In-Place, Per Voice Grade Circuit			CLO	PE1BR		23.00					
		Physical Collocation Virtual to Physical Collocation In-Place, Per DSO Circuit			CLO	PE1BP		23.00					
		Physical Collocation - Virtual to Physical Collocation In-Place, Per DS1 Circuit			CLO	PE1BS		33.00					
		Physical Collocation - Virtual to Physical Collocation In-Place, per DS3 Circuit			CLO	PE1BE		37.00					

COLLOCATION - Florida

CATEGORY		RATE ELEMENTS	Interim	Zone	BCS	USOC	RATES ($)					Svc Order Submitted Elec per LSR	Svc Order Submitted Manually per LSR
							Rec	Nonrecurring		Nonrecurring Disconnect			
								First	Add'l	First	Add'l	SOMEC	SOMAN
		Physical Collocation - Co-Carrier Cross Connects/Direct Connect - Fiber Cable Support Structure, per linear ft., per cable			CLO	PE1ES	0.001						
		Physical Collocation - Co-Carrier Cross Connect/Direct Connect - Copper/Coax Cable Support Structure, per lin. ft., per cable			CLO	PE1DS	0.0014						
		Physical Collocation - Co-Carrier Cross Connects/Direct Connect, Application Fee, per application			CLO	PE1DT		584.11					
		Physical Collocation - Fiber Entrance Cable per Cable (CO manhole to vault splice)			CLO	PE1EC		973.661	42.712				
		Physical Collocation - Fiber Entrance Cable Installation, per Fiber			CLO	PE1ED		7.24					
ADJACENT COLLOCATION													
		Adjacent Collocation - Space Charge per Sq. Ft.			CLOAC	PE1JA	0.1635						
		Adjacent Collocation - Electrical Facility Charge per Linear Ft.			CLOAC	PE1JC	5.11						
		Adjacent Collocation - 2-Wire Cross-Connects			UEA,UHL,UDL,UCL	PE1JE	0.0213	24.69	23.69	11.77	10.62		
		Adjacent Collocation - 4-Wire Cross-Connects			UEA,UHL,UDL,UCL	PE1JF	0.0426	24.88	23.83	12.04	10.80		
		Adjacent Collocation - DS1 Cross-Connects			USL	PE1JG	1.22	44.24	31.98	12.07	10.91		
		Adjacent Collocation - DS3 Cross-Connects			UEA,UHL,UDL,UCL	PE1JH	16.56	41.94	30.52	13.91	11.15		
		Adjacent Collocation - 2-Fiber Cross-Connect			CLOAC	PE1JJ	2.81	41.94	30.52	13.91	11.16		
		Adjacent Collocation - 4-Fiber Cross-Connect			CLOAC	PE1JK	5.36	51.30	39.87	18.29	15.54		
		Adjacent Collocation - Application Fee			CLOAC	PE1JB		2,785.00					
		Adjacent Collocation - 120V, Single Phase Standby Power Rate per AC Breaker Amp			CLOAC	PE1JL	5.38						
		Adjacent Collocation - 240V, Single Phase Standby Power Rate per AC Breaker Amp			CLOAC	PE1JM	10.77						
		Adjacent Collocation - 120V, Three Phase Standby Power Rate per AC Breaker Amp			CLOAC	PE1JN	16.15						
		Adjacent Collocation - 277V, Three Phase Standby Power Rate per AC Breaker Amp			CLOAC	PE1JO	37.30						
		Adjacent Collocation - Cable Support Structure per Entrance Cable			CLOAC	PE1JP	18.96						
PHYSICAL COLLOCATION IN THE REMOTE SITE													
		Physical Collocation in the Remote Site - Application Fee			CLORS	PE1RA		617.91		328.81			
		Cabinet Space in the Remote Site per Bay/ Rack			CLORS	PE1RB	219.49						
		Physical Collocation in the Remote Site - Security Access - Key			CLORS	PE1RD		26.30					
		Physical Collocation in the Remote Site - Space Availability Report per Premises Requested			CLORS	PE1SR		232.69					
		Physical Collocation in the Remote Site - Remote Site CLLI Code Request, per CLLI Code Requested			CLORS	PE1RE		75.41					
		Remote Site DLEC Data (BRSDD), per Compact Disk, per CO			CLORS	PE1RR		233.51					
		Physical Collocation - Security Escort for Basic Time - normally scheduled work, per half hour			CLORS	PE1BT		16.52	10.83				
		Physical Collocation - Security Escort for Overtime - outside of normally scheduled working hours on a scheduled work day, per half hour			CLORS	PE1OT		21.92	14.19				

COLLOCATION - Florida

CATEGORY		RATE ELEMENTS	Interim	Zone	BCS	USOC	RATES ($)					Svc Order Submitted Elec per LSR	Svc Order Submitted Manually per LSR
							Rec	Nonrecurring		Nonrecurring Disconnect			
								First	Add'l	First	Add'l	SOMEC	SOMAN
		Physical Collocation - Security Escort for Premium Time - outside of scheduled work day, per half hour			CLORS	PE1PT		27.31	17.55				
PHYSICAL COLLOCATION IN THE REMOTE SITE - ADJACENT													
		Remote Site-Adjacent Collocation - AC Power, per breaker amp			CLORS	PE1RS	6.27						
		Remote Site-Adjacent Collocation - Real Estate, per square foot			CLORS	PE1RT	0.134						
		Remote Site-Adjacent Collocation-Application Fee			CLORS	PE1RU		755.62	755.62				
	NOTE: If Security Escort and/or Add'l Engineering Fees become necessary for remote site collocation, the Parties will negotiate appropriate rates.												
VIRTUAL COLLOCATION													
		Virtual Collocation - Application Fee			AMTFS	EAF		4,122.00	1,249.00				
		Virtual Collocation Administrative Only - Application Fee			AMTFS	VE1AF		742.00					
		Virtual Collocation - Cable Installation Cost, per cable			AMTFS	ESPCX	12.45	965.00					
		Virtual Collocation - Floor Space, per sq. ft.			AMTFS	ESPVX	4.25						
		Virtual Collocation - Power, per fused amp			AMTFS	ESPAX	6.95						
		Virtual Collocation - Cable Support Structure, per entrance cable			AMTFS	ESPSX	13.35						
		Virtual Collocation - 2-wire Cross Connects (loop)			UEANL,UEA,UDN,UDC,UAL,UHL,UCL,UEQ, UNCVX, UNCDX, UNCNX	UEAC2	0.0502	11.57					
		Virtual Collocation - 4-wire Cross Connects (loop)			UEA,UHL,UCL,UDL, UAL, UDN, UNCVX, UNCDX	UEAC4	0.0502	11.57					
		Virtual Collocation - 2-Fiber Cross Connects			UDL12, UDLO3, U1T48, U1T12, U1TO3, ULDO3, ULD12, ULD48, UDF	CNC2F	6.71	2,431.00					
		Virtual Collocation - 4-Fiber Cross Connects			UDL12, UDLO3, U1T48, U1T12, U1TO3, ULDO3, ULD12, ULD48, UDF	CNC4F	6.71	2,431.00					
		Virtual collocation - Special Access & UNE, cross-connect per DS1			USL, ULR, UXTD1, UNC1X, ULDD1, U1TD1, USLEL, UNLD1, UEPEX, UEPDX	CNC1X	7.50	155.00	14.00				
		Virtual collocation - Special Access & UNE, cross-connect per DS3			USL,UE3, U1TD3, UXTS1, UXTD3, UNC3X, UNCSX, ULDD3, U1TS1, ULDS1, UDLSX, UNLD3	CND3X	56.25	151.90	11.83				
		Virtual Collocation - Co-Carrier Cross Connect/Direct Connect, Application Fee, per application			AMTFS	VE1CA		584.11					

COLLOCATION - Florida

CATEGORY	RATE ELEMENTS	Interim	Zone	BCS	USOC	RATES ($)					Svc Order Submitted Elec per LSR	Svc Order Submitted Manually per LSR
						Rec	Nonrecurring		Nonrecurring Disconnect			
							First	Add'l	First	Add'l	SOMEC	SOMAN
	Virtual Collocation - Co-Carrier Cross Connects/Direct Connect - Fiber Cable Support Structure, per linear foot, per cable			AMTFS	VE1CB	0.001						
	Virtual Collocation - Co-Carrier Cross Connects/Direct Connect - Copper/Coax Cable Support Structure, per linear ft, per cable			AMTFS	VE1CD	0.0014						
	Virtual Collocation Cable Records - per request			AMTFS	VE1BA		I 1525	S 980.22	267.08			
	Virtual Collocation Cable Records - VG/DS0 Cable, per cable record			AMTFS	VE1BB		656.50		379.78			
	Virtual Collocation Cable Records - VG/DS0 Cable, per each 100 pair			AMTFS	VE1BC		9.66		11.84			
	Virtual Collocation Cable Records - DS1, per T1TIE			AMTFS	VE1BD		4.52		5.54			
	Virtual Collocation Cable Records - DS3, per T3TIE			AMTFS	VE1BE		15.82		19.40			
	Virtual Collocation Cable Records - Fiber Cable, per 99 fiber records			AMTFS	VE1BF		169.67		154.89			
	Virtual collocation - Security Escort - Basic, per quarter hour			AMTFS	SPTBQ		10.89					
	Virtual collocation - Security Escort - Overtime, per quarter hour			AMTFS	SPTOQ		13.64					
	Virtual collocation - Security Escort - Premium, per quarter hour			AMTFS	SPTPQ		16.40					
	Virtual Collocation - 2-wire Cross Connects (loop), per ckts			AMTFS	VE1R2	0.05	11.57					
	Virtual Collocation - 4-wire Cross Connects (loop), per ckts			AMTFS	VE1R4	0.05	11.57					
	Virtual Collocation - DS-1/DCS Cross Connects, PER CKTS			AMTFS	VE11S	8.09	69.64					
	Virtual Collocation - DS-1.DSX Cross Connects, PER CKTS			AMTFS	VE11X	0.41	69.64					
	Virtual Collocation - DS-3/DCS Cross Connects, PER CKT			AMTFS	VE13S	59.67	528.00					
	Virtual Collocation - DS-3/DSC Cross Connects, PER CKT			AMTFS	VE13X	10.06	528.00					
	Virtual collocation - Maintenance in CO - Basic, per quarter hour			AMTFS	SPTRE		10.89					
	Virtual collocation - Maintenance in CO - Overtime, per quarter hour			AMTFS	SPTOE		13.64					
	Virtual collocation - Maintenance in CO - Premium per quarter hour			AMTFS	SPTPE		16.40					
	Virtual Collocation - CFA Information Resend Request, per Premises, Per Arrangement, per request			AMTFS	VE1QR		77.54					
VIRTUAL COLLOCATION												
	Virtual Collocation - 2-wire Cross Connect, Exchange Port 2-Wire Analog - Res			UEPSR	VE1R2	0.0502	11.57	11.57				
	Virtual Collocation 2-Wire Cross Connect, Exchange Port 2-Wire Line Side PBX Trunk - Bus			UEPSP	VE1R2	0.0502	11.57	11.57				
	Virtual Collocation 2-Wire Cross Connect, Exchange Port 2-Wire Voice Grade PBX Trunk - Res			UEPSE	VE1R2	0.0502	11.57	11.57				
	Virtual Collocation 2-Wire Cross Connect, Exchange Port 2-Wire Analog Bus			UEPSB	VE1R2	0.0502	11.57	11.57				
	Virtual Collocation 2-Wire Cross Connect, Exchnage Port 2-Wire ISDN			UEPSX	VE1R2	0.0502	11.57	11.57				
	Virtual Collocation 4-Wire Cross Connect, Exchange Port 4-Wire ISDN DS1			UEPEX	VE1R4	0.0502	11.57	11.57				

Note: Rates displaying an "I" in the Interim column are interim as a result of a Commission order.

COLLOCATION - Georgia

CATEGORY		RATE ELEMENTS	Interim	Zone	BCS	USOC	RATES ($)					Svc Order Submitted Elec per LSR	Svc Order Submitted Manually per LSR
							Rec	Nonrecurring		Nonrecurring Disconnect			
								First	Add'l	First	Add'l	SOMEC	SOMAN
PHYSICAL COLLOCATION													
		Physical Collocation 2-Wire Cross Connect, Exchange Port 2-Wire Analog - Res			UEPSR	PE1R2	0.0197						
		Physical Collocation 2-Wire Cross Connect, Exchange Port 2-Wire Line Side PBX Trunk - Bus			UEPSP	PE1R2	0.0197						
		Physical Collocation 2-Wire Cross Connect, Exchange Port 2-Wire Voice Grade PBX Trunk - Res			UEPSE	PE1R2	0.0197						
		Physical Collocation 2-Wire Cross Connect, Exchange Port 2-Wire Analog - Bus			UEPSB	PE1R2	0.0197						
		Physical Collocation 2-Wire Cross Connect, Exchange Port 2-Wire ISDN			UEPSX	PE1R2	0.0197						
		Physical Collocation 4-Wire Cross Connect, Exchange Port 4-Wire ISDN DS1			UEPEX	PE1R4	0.0393						
PHYSICAL COLLOCATION													
		Physical Collocation - Initial Application Fee			CLO	PE1BA		1,285.98		0.59			
		Physical Collocation - Subsequent Application Fee			CLO	PE1CA		1,085.48		0.59			
		Physical Collocation Administrative Only - Application Fee			CLO	PE1BL		740.83					
		Physical Collocation - Space Preparation - Firm Order Processing			CLO	PE1SJ		141.10					
		Physical Collocation - Space Preparation - C.O. Modification per square ft.			CLO	PE1SK	2.01						
		Physical Collocation - Space Preparation, Common Systems Modifications-Cageless, per square foot			CLO	PE1SL	2.23						
		Physical Collocation - Space Preparation - Common Systems Modifications-Caged, per cage			CLO	PE1SM	75.61						
		Physical Collocation - Cable Installation, Pricing, non-recurring charge, per Entrance Cable			CLO	PE1BD		736.93		21.51			
		Physical Collocation - Floor Space, per sq feet			CLO	PE1PJ	4.52						
		Physical Collocation - Cable Support Structure, per Entrance Cable			CLO	PE1PM	7.21						
		Physical Collocation - Power, -48V DC Power - per Fused Amp Requested			CLO	PE1PL	4.78						
		Physical Collocation - Power, -48V DC Power, Grandfathered Site, per Fused Amp Requested			CLO	PE1FT	2.63						
		Physical Collocation - Power, -48V DC Power, Measured AC Usage, per Used Amp, per Power Feed ("A" or "B" Feed)			CLO	PE1FU	3.36						
		Physical Collocation - Power, -48V DC Power, Infrastructure Capital and Expense Costs, per Fused Amp Requested			CLO	PE1FV	2.54						
		Physical Collocation - Power, -48V DC Power, Grandfathered Site, Infrastructure Expense Costs, per Fused Amp Requested			CLO	PE1FW	0.39						
		Physical Collocation - Power, -48V DC Power, Meter Reading - per CLEC per CO, First 12 Circuits w/BST Meter			CLO	PE1FO	102.24						
		Physical Collocation - Power, -48V DC Power, Meter Reading - per CLEC per CO, per Each Additional 2 Circuits w/BST Meter			CLO	PE1FP	8.94						
		Physical Collocation - Power, -48V DC Power, Meter Reading - per CLEC per CO, First 12 Circuits w/CLEC Meter			CLO	PE1FQ	98.25						

COLLOCATION - Georgia

CATEGORY		RATE ELEMENTS	Interim	Zone	BCS	USOC	RATES ($)					Svc Order Submitted Elec per LSR	Svc Order Submitted Manually per LSR
							Rec	Nonrecurring		Nonrecurring Disconnect			
								First	Add'l	First	Add'l	SOMEC	SOMAN
		Physical Collocation - Power, -48V DC Power, Meter Reading - per CLEC per CO, per Each Additional 2 Circuits w/CLEC Meter			CLO	PE1FR	8.94						
		Physical Collocation - Power, -48V DC Power, Additional Meter Reading Trip Charge, per Central Office per Occurrence			CLO	PE1FM		307.64					
		Physical Collocation - Power, 120V AC Power, Single Phase, per Breaker Amp			CLO	PE1FB	5.14						
		Physical Collocation - Power, 240V AC Power, Single Phase, per Breaker Amp			CLO	PE1FD	10.30						
		Physical Collocation - Power, 120V AC Power, Three Phase, per Breaker Amp			CLO	PE1FE	15.44						
		Physical Collocation - Power, 277V AC Power, Three Phase, per Breaker Amp			CLO	PE1FG	35.65						
		Physical Collocation - 2-wire cross-connect, loop, provisioning			UEANL,UEQ, UNCNX, UEA, UCL, UAL, UHL, UDC, UDN, UNCVX	PE1P2	0.0197						
		Physical Collocation - 4-wire cross-connect, loop, provisioning			UEA, UHL, UNCVX, UNCDX, UCL, UDL	PE1P4	0.0393						
		Physical Collocation -DS1 Cross-Connect for Physical Collocation, provisioning			WDS1L,WDS1S, UXTD1, ULDD1, USLEL, UNLD1, UEPEX, UEPDX, USL, U1TD1, UNC1X	PE1P1	0.3726						
		Physical Collocation - DS3 Cross-Connect, provisioning			UE3,U1TD3, UXTD3, UXTS1, UNC3X, UNCSX, ULDD3, U1TS1,ULDS1, UNLD3	PE1P3	4.06						
		Physical Collocation - 2-Fiber Cross-Connect			CLO, ULDO3, ULD12, ULD48, U1TO3, U1T12, U1T48, UDLO3, UDL12, UDF	PE1F2	1.72						
		Physical Collocation - 4-Fiber Cross-Connect			ULDO3, ULD12, ULD48, U1TO3, U1T12, U1T48, UDLO3, UDL12, UDF	PE1F4	3.30						
		Physical Collocation - Space enclosure, welded wire, first 100 square feet			CLO	PE1BW	160.45						
		Physical Collocation - Space enclosure, welded wire, 50 square feet			CLO	PE1BX	144.71						
		Physical Collocation - Space enclosure, welded wire, each additional 50 square feet			CLO	PE1CW	15.74						

COLLOCATION - Georgia

CATEGORY		RATE ELEMENTS	Interim	Zone	BCS	USOC	RATES ($)					Svc Order Submitted Elec per LSR	Svc Order Submitted Manually per LSR
							Rec	Nonrecurring		Nonrecurring Disconnect			
								First	Add'l	First	Add'l	SOMEC	SOMAN
		Physical Collocation - Security Access System - Security System per Central Office, per Sq. Ft.			CLO	PE1AY	0.0106						
		Physical Collocation -Security Access System - New Card Activation, per Card Activation (First), per State			CLO	PE1A1		22.00					
		Physical Collocation - Security Access System - New Access Card Deactivation, per Card			CLO	PE1A4		8.72	8.72				
		Physical Collocation-Security Access System-Administrative Change, existing Access Card, per Request, per State, per Card			CLO	PE1AA		5.38					
		Physical Collocation - Security Access System - Replace Lost or Stolen Card, per Card			CLO	PE1AR		17.01					
		Physical Collocation - Security Access - Initial Key, per Key			CLO	PE1AK		13.20					
		Physical Collocation - Security Access - Key, Replace Lost or Stolen Key, per Key			CLO	PE1AL		13.20					
		Physical Collocation - Space Availability Report, per Central Office Requested			CLO	PE1SR		248.75					
		Physical Collocation - CFA Information Resend Request, per premises, per arrangement, per request			CLO	PE1C9		77.42					
		Physical Collocation - Cable Records, per request			CLO	PE1CR		I 743.65	S 478.06	125.75			
		Physical Collocation, Cable Records, VG/DS0 Cable, per cable record (maximum 3600 records)			CLO	PE1CD		317.60		177.77			
		Physical Collocation, Cable Records, VG/DS0 Cable, per each 100 pair			CLO	PE1CO		4.48		5.30			
		Physical Collocation, Cable Records, DS1, per T1 TIE			CLO	PE1C1		2.22		2.63			
		Physical Collocation, Cable Records, DS3, per T3 TIE			CLO	PE1C3		7.76		9.19			
		Physical Collocation - Cable Records, Fiber Cable, per cable record (maximum 99 records)			CLO	PE1CB		83.45		73.57			
		Physical Collocation - Security Escort for Basic Time - normally scheduled work, per half hour			CLO	PE1BT		16.52	10.83				
		Physical Collocation - Security Escort for Overtime - outside of normally scheduled working hours on a scheduled work day, per half hour			CLO	PE1OT		21.92	14.19				
		Physical Collocation - Security Escort for Premium Time - outside of scheduled work day, per half hour			CLO	PE1PT		27.31	17.55				
		Physical Collocation - Virtual to Physical Collocation Relocation, per Voice Grade Circuit			CLO	PE1BV		33.00					
		Physical Collocation - Virtual to Physical Collocation Relocation, per DSO Circuit			CLO	PE1BO		33.00					
		Physical Collocation - Virtual to Physical Collocation Relocation, per DS1 Circuit			CLO	PE1B1		52.00					
		Physical Collocation - Virtual to Physical Collocation Relocation, per DS3 Circuit			CLO	PE1B3		52.00					
		Physical Collocation - Virtual to Physical Collocation In-Place, Per Voice Grade Circuit			CLO	PE1BR		23.00					
		Physical Collocation Virtual to Physical Collocation In-Place, Per DSO Circuit			CLO	PE1BP		23.00					
		Physical Collocation - Virtual to Physical Collocation In-Place, Per DS1 Circuit			CLO	PE1BS		33.00					

COLLOCATION - Georgia

CATEGORY		RATE ELEMENTS	Interim	Zone	BCS	USOC	RATES ($)					Svc Order Submitted Elec per LSR	Svc Order Submitted Manually per LSR
							Rec	Nonrecurring		Nonrecurring Disconnect			
								First	Add'l	First	Add'l	SOMEC	SOMAN
		Physical Collocation - Virtual to Physical Collocation In-Place, per DS3 Circuit			CLO	PE1BE		37.00					
		Physical Collocation - Co-Carrier Cross Connects/Direct Connect - Fiber Cable Support Structure, per linear ft., per cable			CLO	PE1ES	0.001						
		Physical Collocation - Co-Carrier Cross Connect/Direct Connect - Copper/Coax Cable Support Structure, per lin. ft., per cable			CLO	PE1DS	0.0015						
		Physical Collocation - Co-Carrier Cross Connects/Direct Connect, Application Fee, per application			CLO	PE1DT		583.18					
		Physical Collocation - Application Cost, Simple Augment			CLO	PE1KS		594.05		1.21			
		Physical Collocation - Application Cost, Minor Augment			CLO	PE1KM		832.95		1.21			
		Physical Collocation - Application Cost, Intermediate Augment			CLO	PE1K1		1,057.00		1.21			
		Physical Collocation - Application Cost, Major Augment			CLO	PE1KJ		2,408.00		1.21			
		Physical Collocation, Entrance Cable Support Structure, Copper, per each 100 pairs or fraction thereof (CO Manhole to Collocation Space)			CLO	PE1EE	0.2629						
		Physical Collocation, Entrance Cable Installation, Copper, per Cable (CO Manhole to Collocation Space)			CLO	PE1EF		755.15		21.51			
		Physical Collocation, Entrance Cable Installation, Copper, per each 100 pairs or fraction thereof (CO Manhole to Collocation Space)			CLO	PE1EG		9.12					
ADJACENT COLLOCATION													
		Adjacent Collocation - Space Charge per Sq. Ft.			CLOAC	PE1JA	0.164						
		Adjacent Collocation - Electrical Facility Charge per Linear Ft.			CLOAC	PE1JC	4.01						
		Adjacent Collocation - 2-Wire Cross-Connects			UEA,UHL,UDL,UCL	PE1JE	0.0172						
		Adjacent Collocation - 4-Wire Cross-Connects			UEA,UHL,UDL,UCL	PE1JF	0.0344						
		Adjacent Collocation - DS1 Cross-Connects			USL	PE1JG	0.3608						
		Adjacent Collocation - DS3 Cross-Connects			UEA,UHL,UDL,UCL	PE1JH	4.73						
		Adjacent Collocation - 2-Fiber Cross-Connect			CLOAC	PE1JJ	1.66						
		Adjacent Collocation - 4-Fiber Cross-Connect			CLOAC	PE1JK	3.24						
		Adjacent Collocation - Application Fee			CLOAC	PE1JB		1,382.19		0.50			
		Adjacent Collocation - 120V, Single Phase Standby Power Rate per AC Breaker Amp			CLOAC	PE1JL	5.14						
		Adjacent Collocation - 240V, Single Phase Standby Power Rate per AC Breaker Amp			CLOAC	PE1JM	10.30						
		Adjacent Collocation - 120V, Three Phase Standby Power Rate per AC Breaker Amp			CLOAC	PE1JN	15.44						
		Adjacent Collocation - 277V, Three Phase Standby Power Rate per AC Breaker Amp			CLOAC	PE1JO	35.65						
		Adjacent Collocation - 240V, Three Phase Standby Power Rate per AC Breaker Amp			CLOAC	PE1JD	35.65						
PHYSICAL COLLOCATION IN THE REMOTE SITE													
		Physical Collocation in the Remote Site - Application Fee			CLORS	PE1RA		300.61		132.62			
		Cabinet Space in the Remote Site per Bay/ Rack			CLORS	PE1RB	143.23						
		Physical Collocation in the Remote Site - Security Access - Key			CLORS	PE1RD		13.20					

COLLOCATION - Georgia

CATEGORY		RATE ELEMENTS	Interim	Zone	BCS	USOC	RATES ($)					Svc Order Submitted Elec per LSR	Svc Order Submitted Manually per LSR
							Rec	Nonrecurring		Nonrecurring Disconnect			
								First	Add'l	First	Add'l	SOMEC	SOMAN
		Physical Collocation in the Remote Site - Space Availability Report per Premises Requested			CLORS	PE1SR		109.94					
		Physical Collocation in the Remote Site - Remote Site CLLI Code Request, per CLLI Code Requested			CLORS	PE1RE		36.04					
		Remote Site DLEC Data (BRSDD), per Compact Disk, per CO			CLORS	PE1RR		116.64					
		Physical Collocation - Security Escort for Basic Time - normally scheduled work, per half hour			CLORS	PE1BT		16.52	10.83				
		Physical Collocation - Security Escort for Overtime - outside of normally scheduled working hours on a scheduled work day, per half hour			CLORS	PE1OT		21.92	14.19				
		Physical Collocation - Security Escort for Premium Time - outside of scheduled work day, per half hour			CLORS	PE1PT		27.31	17.55				
PHYSICAL COLLOCATION IN THE REMOTE SITE - ADJACENT													
		Remote Site-Adjacent Collocation - AC Power, per breaker amp			CLORS	PE1RS	6.27						
		Remote Site-Adjacent Collocation - Real Estate, per square foot			CLORS	PE1RT	0.134						
		Remote Site-Adjacent Collocation-Application Fee			CLORS	PE1RU		755.62	755.62				
	NOTE: If Security Escort and/or Add'l Engineering Fees become necessary for remote site collocation, the Parties will negotiate appropriate rates.												
VIRTUAL REMOTE SITE COLLOCATION													
		Virtual Collocation in the Remote Site - Application Fee			VE1RS	VE1RB		300.61		132.62			
		Virtual Collocation in the Remote Site - Per Bay/Rack of Space			VE1RS	VE1RC	143.23						
		Virtual Collocation in the Remote Site - Space Availability Report per Premises requested			VE1RS	VE1RR		109.94					
		Virtual Collocation in the Remote Site - Remote Site CLLI Code Request, per CLLI Code Requested			VE1RS	VE1RL		36.04					
VIRTUAL COLLOCATION													
		Virtual Collocation - Application Fee			AMTFS	EAF		609.52		0.59			
		Virtual Collocation Administrative Only - Application Fee			AMTFS	VE1AF		609.52					
		Virtual Collocation - Cable Installation Cost, per cable			AMTFS	ESPCX		736.93		21.51			
		Virtual Collocation - Floor Space, per sq. ft.			AMTFS	ESPVX	4.52						
		Virtual Collocation - Power, per fused amp			AMTFS	ESPAX	4.78						
		Virtual Collocation - Cable Support Structure, per entrance cable			AMTFS	ESPSX	7.57						
		Virtual Collocation - 2-wire Cross Connects (loop)			UEANL,UEA,UDN,UDC,UAL,UHL,UCL,UEQ, UNCVX, UNCDX, UNCNX	UEAC2	0.0188						
		Virtual Collocation - 4-wire Cross Connects (loop)			UEA,UHL,UCL,UDL, UAL, UDN, UNCVX, UNCDX	UEAC4	0.0375						
		Virtual Collocation - 2-Fiber Cross Connects			UDL12, UDLO3, U1T48, U1T12, U1TO3, ULDO3, ULD12, ULD48, UDF	CNC2F	1.73						

COLLOCATION - Georgia

CATEGORY		RATE ELEMENTS	Interim	Zone	BCS	USOC	RATES ($)					Svc Order Submitted Elec per LSR	Svc Order Submitted Manually per LSR
							Rec	Nonrecurring		Nonrecurring Disconnect			
								First	Add'l	First	Add'l	SOMEC	SOMAN
		Virtual Collocation - 4-Fiber Cross Connects			UDL12, UDLO3, U1T48, U1T12, U1TO3, ULDO3, ULD12, ULD48, UDF	CNC4F	3.45						
		Virtual collocation - Special Access & UNE, cross-connect per DS1			USL, ULR, UXTD1, UNC1X, ULDD1, U1TD1, USLEL, UNLD1, UEPEX, UEPDX	CNC1X	0.3726						
		Virtual collocation - Special Access & UNE, cross-connect per DS3			USL,UE3, U1TD3, UXTS1, UXTD3, UNC3X, UNCSX, ULDD3, U1TS1, ULDS1, UDLSX, UNLD3	CND3X	4.06						
		Virtual Collocation - Co-Carrier Cross Connect/Direct Connect, Application Fee, per application			AMTFS	VE1CA	583.18						
		Virtual Collocation - Co-Carrier Cross Connects - Fiber Cable Support Structure, per linear foot, per cable			AMTFS	VE1CB	0.001						
		Virtual Collocation - Co-Carrier Cross Connects - Copper/Coax Cable Support Structure, per linear ft, per cable			AMTFS	VE1CD	0.0015						
		Virtual Collocation Cable Records - per request			AMTFS	VE1BA		I 743.65	S 478.06	125.75			
		Virtual Collocation Cable Records - VG/DS0 Cable, per cable record			AMTFS	VE1BB		317.60		177.77			
		Virtual Collocation Cable Records - VG/DS0 Cable, per each 100 pair			AMTFS	VE1BC		4.48		5.30			
		Virtual Collocation Cable Records - DS1, per T1TIE			AMTFS	VE1BD		2.22		2.63			
		Virtual Collocation Cable Records - DS3, per T3TIE			AMTFS	VE1BE		7.76		9.19			
		Virtual Collocation Cable Records - Fiber Cable, per 99 fiber records			AMTFS	VE1BF		83.45		73.57			
		Virtual collocation - Security Escort - Basic, per half hour			AMTFS	SPTBX		16.52	10.83				
		Virtual collocation - Security Escort - Overtime, per half hour			AMTFS	SPTOX		21.92	14.19				
		Virtual collocation - Security Escort - Premium, per half hour			AMTFS	SPTPX		27.31	17.55				
		Virtual collocation - Maintenance in CO - Basic, per half hour			AMTFS	CTRLX		26.54	10.83				
		Virtual collocation - Maintenance in CO - Overtime, per half hour			AMTFS	SPTOM		35.44	14.19				
		Virtual collocation - Maintenance in CO - Premium per half hour			AMTFS	SPTPM		44.34	17.55				
		Virtual Collocation - CFA Information Resend Request, per Premises, per arrangement, per request			AMTFS	VE1QR		77.42					
		Virtual Collocation, Entrance Cable Support Structure, Copper, per each 100 pairs or fraction thereof (CO Manhole to Collocation Space)			AMTFS	VE1EE	0.23						
		Virtual Collocation, Entrance Cable Installation, Copper, per Cable (CO Manhole to Collocation Space)			AMTFS	VE1EF		755.15		21.51			

COLLOCATION - Georgia													
CATEGORY		RATE ELEMENTS	Interim	Zone	BCS	USOC	RATES ($)					Svc Order Submitted Elec per LSR	Svc Order Submitted Manually per LSR
							Rec	Nonrecurring		Nonrecurring Disconnect			
								First	Add'l	First	Add'l	SOMEC	SOMAN
		Virtual Collocation, Entrance Cable Installation, Copper, per each 100 pairs or fraction thereof (CO Manhole to Collocation Space)			AMTFS	VE1EG		9.12					
VIRTUAL COLLOCATION													
		Virtual Collocation - 2-wire Cross Connect, Exchange Port 2-Wire Analog - Res			UEPSR	VE1R2	0.0188						
		Virtual Collocation 2-Wire Cross Connect, Exchange Port 2-Wire Line Side PBX Trunk - Bus			UEPSP	VE1R2	0.0188						
		Virtual Collocation 2-Wire Cross Connect, Exchange Port 2-Wire Voice Grade PBX Trunk - Res			UEPSE	VE1R2	0.0188						
		Virtual Collocation 2-Wire Cross Connect, Exchange Port 2-Wire Analog Bus			UEPSB	VE1R2	0.0188						
		Virtual Collocation 2-Wire Cross Connect, Exchnage Port 2-Wire ISDN			UEPSX	VE1R2	0.0188						
		Virtual Collocation 4-Wire Cross Connect, Exchange Port 4-Wire ISDN DS1			UEPEX	VE1R4	0.0375						
	Note: Rates displaying an "I" in the Interim column are interim as a result of a Commission order.												

COLLOCATION - Kentucky

CATEGORY		RATE ELEMENTS	Interim	Zone	BCS	USOC	RATES ($)					Svc Order Submitted Elec per LSR	Svc Order Submitted Manually per LSR
							Rec	Nonrecurring		Nonrecurring Disconnect			
								First	Add'l	First	Add'l	SOMEC	SOMAN
PHYSICAL COLLOCATION													
		Physical Collocation 2-Wire Cross Connect, Exchange Port 2-Wire Analog - Res			UEPSR	PE1R2	0.0333	24.68	23.68	12.14	10.95		
		Physical Collocation 2-Wire Cross Connect, Exchange Port 2-Wire Line Side PBX Trunk - Bus			UEPSP	PE1R2	0.0333	24.68	23.68	12.14	10.95		
		Physical Collocation 2-Wire Cross Connect, Exchange Port 2-Wire Voice Grade PBX Trunk - Res			UEPSE	PE1R2	0.0333	24.68	23.68	12.14	10.95		
		Physical Collocation 2-Wire Cross Connect, Exchange Port 2-Wire Analog - Bus			UEPSB	PE1R2	0.0333	24.68	23.68	12.14	10.95		
		Physical Collocation 2-Wire Cross Connect, Exchange Port 2-Wire ISDN			UEPSX	PE1R2	0.0333	24.68	23.68	12.14	10.95		
		Physical Collocation 4-Wire Cross Connect, Exchange Port 4-Wire ISDN DS1			UEPEX	PE1R4	0.0665	24.88	23.82	12.77	11.46		
PHYSICAL COLLOCATION													
		Physical Collocation - Initial Application Fee			CLO	PE1BA		3,773.54		1.01			
		Physical Collocation - Subsequent Application Fee			CLO	PE1CA		3,145.35		1.01			
		Physical Collocation Administrative Only - Application Fee			CLO	PE1BL		742.12					
		Physical Collocation - Space Preparation - Firm Order Processing			CLO	PE1SJ		1,206.07					
		Physical Collocation - Space Preparation - C.O. Modification per square ft.			CLO	PE1SK	2.32						
		Physical Collocation - Space Preparation, Common Systems Modifications-Cageless, per square foot			CLO	PE1SL	3.26						
		Physical Collocation - Space Preparation - Common Systems Modifications-Caged, per cage			CLO	PE1SM	110.57						
		Physical Collocation - Cable Installation, Pricing, non-recurring charge, per Entrance Cable			CLO	PE1BD		1,729.11		45.16			
		Physical Collocation - Floor Space, per sq feet			CLO	PE1PJ	7.99						
		Physical Collocation - Cable Support Structure, per Entrance Cable			CLO	PE1PM	19.86						
		Physical Collocation - Power, -48V DC Power - per Fused Amp Requested			CLO	PE1PL	8.06						
		Physical Collocation - Power, -48V DC Power, Grandfathered Site, per Fused Amp Requested			CLO	PE1FT	3.24						
		Physical Collocation - Power, -48V DC Power, Measured AC Usage, per Used Amp, per Power Feed ("A" or "B" Feed)			CLO	PE1FU	3.36						
		Physical Collocation - Power, -48V DC Power, Infrastructure Capital and Expense Costs, per Fused Amp Requested			CLO	PE1FV	5.82						
		Physical Collocation - Power, -48V DC Power, Grandfathered Site, Infrastructure Expense Costs, per Fused Amp Requested			CLO	PE1FW	1.00						
		Physical Collocation - Power, -48V DC Power, Meter Reading - per CLEC per CO, First 12 Circuits w/BST Meter			CLO	PE1FO	102.24						
		Physical Collocation - Power, -48V DC Power, Meter Reading - per CLEC per CO, per Each Additional 2 Circuits w/BST Meter			CLO	PE1FP	8.94						
		Physical Collocation - Power, -48V DC Power, Meter Reading - per CLEC per CO, First 12 Circuits w/CLEC Meter			CLO	PE1FQ	98.25						

COLLOCATION - Kentucky

CATEGORY		RATE ELEMENTS	Interim	Zone	BCS	USOC	RATES ($)					Svc Order Submitted Elec per LSR	Svc Order Submitted Manually per LSR
							Rec	Nonrecurring		Nonrecurring Disconnect			
								First	Add'l	First	Add'l	SOMEC	SOMAN
		Physical Collocation - Power, -48V DC Power, Meter Reading - per CLEC per CO, per Each Additional 2 Circuits w/CLEC Meter			CLO	PE1FR	8.94						
		Physical Collocation - Power, -48V DC Power, Additional Meter Reading Trip Charge, per Central Office per Occurrence			CLO	PE1FM		307.64					
		Physical Collocation - Power, 120V AC Power, Single Phase, per Breaker Amp			CLO	PE1FB	5.44						
		Physical Collocation - Power, 240V AC Power, Single Phase, per Breaker Amp			CLO	PE1FD	10.88						
		Physical Collocation - Power, 120V AC Power, Three Phase, per Breaker Amp			CLO	PE1FE	16.32						
		Physical Collocation - Power, 277V AC Power, Three Phase, per Breaker Amp			CLO	PE1FG	37.68						
		Physical Collocation - 2-wire cross-connect, loop, provisioning			UEANL,UEQ, UNCNX, UEA, UCL, UAL, UHL, UDC, UDN, UNCVX	PE1P2	0.0333	24.68	23.68	12.14	10.95		
		Physical Collocation - 4-wire cross-connect, loop, provisioning			UEA, UHL, UNCVX, UNCDX, UCL, UDL	PE1P4	0.0665	24.88	23.82	12.77	11.46		
		Physical Collocation -DS1 Cross-Connect for Physical Collocation, provisioning			WDS1L,WDS1S, UXTD1, ULDD1, USLEL, UNLD1, UEPEX, UEPDX, USL, U1TD1, UNC1X	PE1P1	1.48	44.23	31.98	12.81	11.57		
		Physical Collocation - DS3 Cross-Connect, provisioning			UE3,U1TD3, UXTD3, UXTS1, UNC3X, UNCSX, ULDD3, U1TS1,ULDS1, UNLD3	PE1P3	18.89	41.93	30.51	14.75	11.83		
		Physical Collocation - 2-Fiber Cross-Connect			CLO, ULDO3, ULD12, ULD48, U1TO3, U1T12, U1T48, UDLO3, UDL12, UDF	PE1F2	3.75	41.93	30.51	14.76	11.84		
		Physical Collocation - 4-Fiber Cross-Connect			ULDO3, ULD12, ULD48, U1TO3, U1T12, U1T48, UDLO3, UDL12, UDF	PE1F4	6.65	51.29	39.87	19.41	16.49		
		Physical Collocation - Space enclosure, welded wire, first 100 square feet			CLO	PE1BW	184.97						
		Physical Collocation - Space enclosure, welded wire, 50 square feet			CLO	PE1BX	166.83						
		Physical Collocation - Space enclosure, welded wire, each additional 50 square feet			CLO	PE1CW	18.14						

COLLOCATION - Kentucky

CATEGORY		RATE ELEMENTS	Interim	Zone	BCS	USOC	RATES ($)					Svc Order Submitted Elec per LSR	Svc Order Submitted Manually per LSR
							Rec	Nonrecurring		Nonrecurring Disconnect			
								First	Add'l	First	Add'l	SOMEC	SOMAN
		Physical Collocation - Security Access System, Security System, per Central Office			CLO	PE1AX	76.10						
		Physical Collocation -Security Access System - New Card Activation, per Card Activation (First), per State			CLO	PE1A1	0.058	55.79					
		Physical Collocation-Security Access System-Administrative Change, existing Access Card, per Request, per State, per Card			CLO	PE1AA		15.64					
		Physical Collocation - Security Access System - Replace Lost or Stolen Card, per Card			CLO	PE1AR		45.74					
		Physical Collocation - Security Access - Initial Key, per Key			CLO	PE1AK		26.29					
		Physical Collocation - Security Access - Key, Replace Lost or Stolen Key, per Key			CLO	PE1AL		26.29					
		Physical Collocation - Space Availability Report, per Central Office Requested			CLO	PE1SR		2,158.67					
		Physical Collocation - CFA Information Resend Request, per premises, per arangement, per request			CLO	PE1C9		77.55					
		Physical Collocation - Cable Records, per request			CLO	PE1CR		I 1524.45	S 980.01	267.02			
		Physical Collocation, Cable Records, VG/DS0 Cable, per cable record (maximum 3600 records)			CLO	PE1CD		656.37		379.70			
		Physical Collocation, Cable Records, VG/DS0 Cable, per each 100 pair			CLO	PE1CO		9.65		11.84			
		Physical Collocation, Cable Records, DS1, per T1 TIE			CLO	PE1C1		4.52		5.54			
		Physical Collocation, Cable Records, DS3, per T3 TIE			CLO	PE1C3		15.81		19.39			
		Physical Collocation - Cable Records, Fiber Cable, per cable record (maximum 99 records)			CLO	PE1CB		169.63		154.85			
		Physical Collocation - Security Escort for Basic Time - normally scheduled work, per half hour			CLO	PE1BT		33.98	21.53				
		Physical Collocation - Security Escort for Overtime - outside of normally scheduled working hours on a scheduled work day, per half hour			CLO	PE1OT		44.26	27.81				
		Physical Collocation - Security Escort for Premium Time - outside of scheduled work day, per half hour			CLO	PE1PT		54.54	34.09				
		Physical Collocation - Virtual to Physical Collocation Relocation, per Voice Grade Circuit			CLO	PE1BV		33.00					
		Physical Collocation - Virtual to Physical Collocation Relocation, per DSO Circuit			CLO	PE1BO		33.00					
		Physical Collocation - Virtual to Physical Collocation Relocation, per DS1 Circuit			CLO	PE1B1		52.00					
		Physical Collocation - Virtual to Physical Collocation Relocation, per DS3 Circuit			CLO	PE1B3		52.00					
		Physical Collocation - Virtual to Physical Collocation In-Place, Per Voice Grade Circuit			CLO	PE1BR		23.00					
		Physical Collocation Virtual to Physical Collocation In-Place, Per DSO Circuit			CLO	PE1BP		23.00					
		Physical Collocation - Virtual to Physical Collocation In-Place, Per DS1 Circuit			CLO	PE1BS		33.00					
		Physical Collocation - Virtual to Physical Collocation In-Place, per DS3 Circuit			CLO	PE1BE		37.00					

COLLOCATION - Kentucky

CATEGORY	RATE ELEMENTS	Interim	Zone	BCS	USOC	RATES ($)					Svc Order Submitted Elec per LSR	Svc Order Submitted Manually per LSR
						Rec	Nonrecurring		Nonrecurring Disconnect			
							First	Add'l	First	Add'l	SOMEC	SOMAN
	Physical Collocation - Co-Carrier Cross Connects/Direct Connect - Fiber Cable Support Structure, per linear ft., per cable			CLO	PE1ES	0.0012						
	Physical Collocation - Co-Carrier Cross Connect/Direct Connect - Copper/Coax Cable Support Structure, per lin. ft., per cable			CLO	PE1DS	0.0018						
	Physical Collocation - Co-Carrier Cross Connects/Direct Connect, Application Fee, per application			CLO	PE1DT		584.20					
	Physical Collocation - Application Cost, Simple Augment			CLO	PE1KS		594.98		1.21			
	Physical Collocation - Application Cost, Minor Augment			CLO	PE1KM		834.26		1.21			
	Physical Collocation - Application Cost, Intermediate Augment			CLO	PE1K1		1,059.00		1.21			
	Physical Collocation - Application Cost, Major Augment			CLO	PE1KJ		2,412.00		1.21			
ADJACENT COLLOCATION												
	Adjacent Collocation - Space Charge per Sq. Ft.			CLOAC	PE1JA	0.0173						
	Adjacent Collocation - Electrical Facility Charge per Linear Ft.			CLOAC	PE1JC	5.35						
	Adjacent Collocation - 2-Wire Cross-Connects			UEA,UHL,UDL,UCL	PE1JE	0.0258	24.68	23.68	12.14	10.95		
	Adjacent Collocation - 4-Wire Cross-Connects			UEA,UHL,UDL,UCL	PE1JF	0.0515	24.88	23.82	12.77	11.46		
	Adjacent Collocation - DS1 Cross-Connects			USL	PE1JG	1.37	44.23	31.98	12.81	11.57		
	Adjacent Collocation - DS3 Cross-Connects			UEA,UHL,UDL,UCL	PE1JH	18.61	41.93	30.51	14.75	11.83		
	Adjacent Collocation - 2-Fiber Cross-Connect			CLOAC	PE1JJ	3.15	41.93	30.51	14.76	11.84		
	Adjacent Collocation - 4-Fiber Cross-Connect			CLOAC	PE1JK	6.02	51.29	39.87	19.41	16.49		
	Adjacent Collocation - Application Fee			CLOAC	PE1JB		3,165.50					
	Adjacent Collocation - 120V, Single Phase Standby Power Rate per AC Breaker Amp			CLOAC	PE1JL	5.44						
	Adjacent Collocation - 240V, Single Phase Standby Power Rate per AC Breaker Amp			CLOAC	PE1JM	10.88						
	Adjacent Collocation - 120V, Three Phase Standby Power Rate per AC Breaker Amp			CLOAC	PE1JN	16.32						
	Adjacent Collocation - 277V, Three Phase Standby Power Rate per AC Breaker Amp			CLOAC	PE1JO	37.68						
PHYSICAL COLLOCATION IN THE REMOTE SITE												
	Physical Collocation in the Remote Site - Application Fee			CLORS	PE1RA		617.78		338.89			
	Cabinet Space in the Remote Site per Bay/ Rack			CLORS	PE1RB	219.67						
	Physical Collocation in the Remote Site - Security Access - Key			CLORS	PE1RD		26.29					
	Physical Collocation in the Remote Site - Space Availability Report per Premises Requested			CLORS	PE1SR		232.64					
	Physical Collocation in the Remote Site - Remote Site CLLI Code Request, per CLLI Code Requested			CLORS	PE1RE		75.40					
	Remote Site DLEC Data (BRSDD), per Compact Disk, per CO			CLORS	PE1RR		233.42					
	Physical Collocation - Security Escort for Basic Time - normally scheduled work, per half hour			CLORS	PE1BT		33.98	21.53				
	Physical Collocation - Security Escort for Overtime - outside of normally scheduled working hours on a scheduled work day, per half hour			CLORS	PE1OT		44.26	27.81				
	Physical Collocation - Security Escort for Premium Time - outside of scheduled work day, per half hour			CLORS	PE1PT		54.54	34.09				
PHYSICAL COLLOCATION IN THE REMOTE SITE - ADJACENT												

COLLOCATION - Kentucky

CATEGORY	RATE ELEMENTS	Interim	Zone	BCS	USOC	RATES ($)					Svc Order Submitted Elec per LSR	Svc Order Submitted Manually per LSR
						Rec	Nonrecurring		Nonrecurring Disconnect			
							First	Add'l	First	Add'l	SOMEC	SOMAN
	Remote Site-Adjacent Collocation - AC Power, per breaker amp			CLORS	PE1RS	6.27						
	Remote Site-Adjacent Collocation - Real Estate, per square foot			CLORS	PE1RT	0.134						
	Remote Site-Adjacent Collocation-Application Fee			CLORS	PE1RU		755.62	755.62				
	NOTE: If Security Escort and/or Add'l Engineering Fees become necessary for remote site collocation, the Parties will negotiate appropriate rates.											
VIRTUAL REMOTE SITE COLLOCATION												
	Virtual Collocation in the Remote Site - Application Fee			VE1RS	VE1RB		615.60		337.70			
	Virtual Collocation in the Remote Site - Per Bay/Rack of Space			VE1RS	VE1RC	224.41						
	Virtual Collocation in the Remote Site - Space Availability Report per Premises requested			VE1RS	VE1RR		231.82					
	Virtual Collocation in the Remote Site - Remote Site CLLI Code Request, per CLLI Code Requested			VE1RS	VE1RL		75.13					
VIRTUAL COLLOCATION												
	Virtual Collocation - Application Fee			AMTFS	EAF		2,419.86		1.01			
	Virtual Collocation Administrative Only - Application Fee			AMTFS	VE1AF		742.12					
	Virtual Collocation - Cable Installation Cost, per cable			AMTFS	ESPCX		1,729.11		45.16			
	Virtual Collocation - Floor Space, per sq. ft.			AMTFS	ESPVX	7.99						
	Virtual Collocation - Power, per fused amp			AMTFS	ESPAX	8.06						
	Virtual Collocation - Cable Support Structure, per entrance cable			AMTFS	ESPSX	17.38						
	Virtual Collocation - 2-wire Cross Connects (loop)			UEANL,UEA,UDN,UDC,UAL,UHL,UCL,UEQ, UNCVX, UNCDX, UNCNX	UEAC2	0.0309	24.68	23.68	12.14	10.95		
	Virtual Collocation - 4-wire Cross Connects (loop)			UEA,UHL,UCL,UDL, UAL, UDN, UNCVX, UNCDX	UEAC4	0.0619	24.88	23.82	12.77	11.46		
	Virtual Collocation - 2-Fiber Cross Connects			UDL12, UDLO3, U1T48, U1T12, U1TO3, ULDO3, ULD12, ULD48, UDF	CNC2F	3.80	41.94	30.51	14.76	11.84		
	Virtual Collocation - 4-Fiber Cross Connects			UDL12, UDLO3, U1T48, U1T12, U1TO3, ULDO3, ULD12, ULD48, UDF	CNC4F	7.59	51.29	39.87	19.41	16.49		
	Virtual collocation - Special Access & UNE, cross-connect per DS1			USL, ULR, UXTD1, UNC1X, ULDD1, U1TD1, USLEL, UNLD1, UEPEX, UEPDX	CNC1X	1.48	44.23	31.98	12.81	11.57		

COLLOCATION - Kentucky

CATEGORY	RATE ELEMENTS	Interim	Zone	BCS	USOC	RATES ($)					Svc Order Submitted Elec per LSR	Svc Order Submitted Manually per LSR
						Rec	Nonrecurring		Nonrecurring Disconnect			
							First	Add'l	First	Add'l	SOMEC	SOMAN
	Virtual collocation - Special Access & UNE, cross-connect per DS3			USL,UE3, U1TD3, UXTS1, UXTD3, UNC3X, UNCSX, ULDD3, U1TS1, ULDS1, UDLSX, UNLD3	CND3X	18.89	41.93	30.51	14.75	11.83		
	Virtual Collocation - Co-Carrier Cross Connect/Direct Connect, Application Fee, per application			AMTFS	VE1CA		584.20					
	Virtual Collocation - Co-Carrier Cross Connects/Direct Connect - Fiber Cable Support Structure, per linear foot, per cable			AMTFS	VE1CB	0.0012						
	Virtual Collocation - Co-Carrier Cross Connects/Direct Connect - Copper/Coax Cable Support Structure, per linear ft., per cable			AMTFS	VE1CD	0.0018						
	Virtual Collocation Cable Records - per request			AMTFS	VE1BA		I 1524.45	S 980.01	267.02			
	Virtual Collocation Cable Records - VG/DS0 Cable, per cable record			AMTFS	VE1BB		656.37		379.70			
	Virtual Collocation Cable Records - VG/DS0 Cable, per each 100 pair			AMTFS	VE1BC		9.65		11.84			
	Virtual Collocation Cable Records -DS1, per T1TIE			AMTFS	VE1BD		4.52		5.54			
	Virtual Collocation Cable Records - DS3, per T3TIE			AMTFS	VE1BE		15.81		19.39			
	Virtual Collocation Cable Records - Fiber Cable, per 99 fiber records			AMTFS	VE1BF		169.63		154.85			
	Virtual collocation - Security Escort - Basic, per half hour			AMTFS	SPTBX		33.98	21.53				
	Virtual collocation - Security Escort - Overtime, per half hour			AMTFS	SPTOX		44.26	27.81				
	Virtual collocation - Security Escort - Premium, per half hour			AMTFS	SPTPX		54.54	34.09				
	Virtual collocation - Maintenance in CO - Basic, per half hour			AMTFS	CTRLX		56.07	21.53				
	Virtual collocation - Maintenance in CO - Overtime, per half hour			AMTFS	SPTOM		73.23	27.81				
	Virtual collocation - Maintenance in CO - Premium per half hour			AMTFS	SPTPM		90.39	34.09				
	Virtual Collocation - CFA Information Resend Request, per Premises, per Arrangement, per request			AMTFS	VE1QR		77.55					
VIRTUAL COLLOCATION												
	Virtual Collocation - 2-wire Cross Connect, Exchange Port 2-Wire Analog - Res			UEPSR	VE1R2	0.0309	24.68	23.68	12.14	10.95		
	Virtual Collocation 2-Wire Cross Connect, Exchange Port 2-Wire Line Side PBX Trunk - Bus			UEPSP	VE1R2	0.0309	24.68	23.68	12.14	10.95		
	Virtual Collocation 2-Wire Cross Connect, Exchange Port 2-Wire Voice Grade PBX Trunk - Res			UEPSE	VE1R2	0.0309	24.68	23.68	12.14	10.95		
	Virtual Collocation 2-Wire Cross Connect, Exchange Port 2-Wire Analog Bus			UEPSB	VE1R2	0.0309	24.68	23.68	12.14	10.95		
	Virtual Collocation 2-Wire Cross Connect, Exchnage Port 2-Wire ISDN			UEPSX	VE1R2	0.0309	24.68	23.68	12.14	10.95		
	Virtual Collocation 4-Wire Cross Connect, Exchange Port 4-Wire ISDN DS1			UEPEX	VE1R4	0.0619	24.88	23.82	12.77	11.46		
	Note: Rates displaying an "I" in the Interim column are interim as a result of a Commission order.											

COLLOCATION - Louisiana

CATEGORY		RATE ELEMENTS	Interim	Zone	BCS	USOC	RATES ($)					Svc Order Submitted Elec per LSR	Svc Order Submitted Manually per LSR
							Rec	Nonrecurring		Nonrecurring Disconnect			
								First	Add'l	First	Add'l	SOMEC	SOMAN
PHYSICAL COLLOCATION													
		Physical Collocation 2-Wire Cross Connect, Exchange Port 2-Wire Analog - Res			UEPSR	PE1R2	0.0318	11.94	11.46				
		Physical Collocation 2-Wire Cross Connect, Exchange Port 2-Wire Line Side PBX Trunk - Bus			UEPSP	PE1R2	0.0318	11.94	11.46				
		Physical Collocation 2-Wire Cross Connect, Exchange Port 2-Wire Voice Grade PBX Trunk - Res			UEPSE	PE1R2	0.0318	11.94	11.46				
		Physical Collocation 2-Wire Cross Connect, Exchange Port 2-Wire Analog - Bus			UEPSB	PE1R2	0.0318	11.94	11.46				
		Physical Collocation 2-Wire Cross Connect, Exchange Port 2-Wire ISDN			UEPSX	PE1R2	0.0318	11.94	11.46				
		Physical Collocation 4-Wire Cross Connect, Exchange Port 4-Wire ISDN DS1			UEPEX	PE1R4	0.0636	12.04	11.53				
PHYSICAL COLLOCATION													
		Physical Collocation - Initial Application Fee			CLO	PE1BA		1,837.24					
		Physical Collocation - Subsequent Application Fee			CLO	PE1CA		1,533.41					
		Physical Collocation Administrative Only - Application Fee			CLO	PE1BL		741.97					
		Physical Collocation - Space Preparation - Firm Order Processing			CLO	PE1SJ		583.33					
		Physical Collocation - Space Preparation - C.O. Modification per square ft.			CLO	PE1SK	2.31						
		Physical Collocation - Space Preparation, Common Systems Modifications-Cageless, per square foot			CLO	PE1SL	2.70						
		Physical Collocation - Space Preparation - Common Systems Modifications-Caged, per cage			CLO	PE1SM	91.60						
		Physical Collocation - Cable Installation, Pricing, non-recurring charge, per Entrance Cable			CLO	PE1BD		841.54					
		Physical Collocation - Floor Space, per sq feet			CLO	PE1PJ	5.30						
		Physical Collocation - Cable Support Structure, per Entrance Cable			CLO	PE1PM	18.31						
		Physical Collocation - Power, -48V DC Power - per Fused Amp Requested			CLO	PE1PL	8.32						
		Physical Collocation - Power, -48V DC Power, Grandfathered Site, per Fused Amp Requested			CLO	PE1FT	3.52						
		Physical Collocation - Power, -48V DC Power, Measured AC Usage, per Used Amp, per Power Feed ("A" or "B" Feed)			CLO	PE1FU	3.33						
		Physical Collocation - Power, -48V DC Power, Infrastructure Capital and Expense Costs, per Fused Amp Requested			CLO	PE1FV	6.18						
		Physical Collocation - Power, -48V DC Power, Grandfathered Site, Infrastructure Expense Costs, per Fused Amp Requested			CLO	PE1FW	1.38						
		Physical Collocation - Power, -48V DC Power, Meter Reading - per CLEC per CO, First 12 Circuits w/BST Meter			CLO	PE1FO	102.24						
		Physical Collocation - Power, -48V DC Power, Meter Reading - per CLEC per CO, per Each Additional 2 Circuits w/BST Meter			CLO	PE1FP	8.94						
		Physical Collocation - Power, -48V DC Power, Meter Reading - per CLEC per CO, First 12 Circuits w/CLEC Meter			CLO	PE1FQ	98.25						

COLLOCATION - Louisiana

CATEGORY		RATE ELEMENTS	Interim	Zone	BCS	USOC	RATES ($)					Svc Order Submitted Elec per LSR	Svc Order Submitted Manually per LSR
							Rec	Nonrecurring		Nonrecurring Disconnect			
								First	Add'l	First	Add'l	SOMEC	SOMAN
		Physical Collocation - Power, -48V DC Power, Meter Reading - per CLEC per CO, per Each Additional 2 Circuits w/CLEC Meter			CLO	PE1FR	8.94						
		Physical Collocation - Power, -48V DC Power, Additional Meter Reading Trip Charge, per Central Office per Occurrence			CLO	PE1FM		307.64					
		Physical Collocation - Power, 120V AC Power, Single Phase, per Breaker Amp			CLO	PE1FB	5.45						
		Physical Collocation - Power, 240V AC Power, Single Phase, per Breaker Amp			CLO	PE1FD	10.92						
		Physical Collocation - Power, 120V AC Power, Three Phase, per Breaker Amp			CLO	PE1FE	16.37						
		Physical Collocation - Power, 277V AC Power, Three Phase, per Breaker Amp			CLO	PE1FG	37.80						
		Physical Collocation - 2-wire cross-connect, loop, provisioning			UEANL,UEQ, UNCNX, UEA, UCL, UAL, UHL, UDC, UDN, UNCVX	PE1P2	0.0318	11.94	11.46				
		Physical Collocation - 4-wire cross-connect, loop, provisioning			UEA, UHL, UNCVX, UNCDX, UCL, UDL	PE1P4	0.0636	12.04	11.53				
		Physical Collocation -DS1 Cross-Connect for Physical Collocation, provisioning			WDS1L,WDS1S, UXTD1, ULDD1, USLEL, UNLD1, UEPEX, UEPDX, USL, U1TD1, UNC1X	PE1P1	1.04	21.39	15.47				
		Physical Collocation - DS3 Cross-Connect, provisioning			UE3,U1TD3, UXTD3, UXTS1, UNC3X, UNCSX, ULDD3, U1TS1,ULDS1, UNLD3	PE1P3	13.21	20.28	14.76				
		Physical Collocation - 2-Fiber Cross-Connect			CLO, ULDO3, ULD12, ULD48, U1TO3, U1T12, U1T48, UDLO3, UDL12, UDF	PE1F2	2.62	20.28	14.76				
		Physical Collocation - 4-Fiber Cross-Connect			ULDO3, ULD12, ULD48, U1TO3, U1T12, U1T48, UDLO3, UDL12, UDF	PE1F4	4.65	24.81	19.29				
		Physical Collocation - Space enclosure, welded wire, first 100 square feet			CLO	PE1BW	184.50						
		Physical Collocation - Space enclosure, welded wire, 50 square feet			CLO	PE1BX	166.40						
		Physical Collocation - Space enclosure, welded wire, each additional 50 square feet			CLO	PE1CW	18.10						

COLLOCATION - Louisiana

CATEGORY		RATE ELEMENTS	Interim	Zone	BCS	USOC	RATES ($)					Svc Order Submitted Elec per LSR	Svc Order Submitted Manually per LSR
							Rec	Nonrecurring		Nonrecurring Disconnect			
								First	Add'l	First	Add'l	SOMEC	SOMAN
		Physical Collocation - Security Access System - Security System per Central Office, per Sq. Ft.			CLO	PE1AY	0.0224						
		Physical Collocation -Security Access System - New Card Activation, per Card Activation (First), per State			CLO	PE1A1	0.0579	27.50					
		Physical Collocation-Security Access System-Administrative Change, existing Access Card, per Request, per State, per Card			CLO	PE1AA		7.74					
		Physical Collocation - Security Access System - Replace Lost or Stolen Card, per Card			CLO	PE1AR		22.64					
		Physical Collocation - Security Access - Initial Key, per Key			CLO	PE1AK		13.01					
		Physical Collocation - Security Access - Key, Replace Lost or Stolen Key, per Key			CLO	PE1AL		13.01					
		Physical Collocation - Space Availability Report, per Central Office Requested			CLO	PE1SR		1,044.07					
		Physical Collocation - CFA Information Resend Request, per premises, per arrangment, per request			CLO	PE1C9		77.43					
		Recurring Collocation Cable Records - per request			CLO	PE1CU	10.97						
		Recurring Collocation Cable Records - VG/DS0 Cable, per cable record			CLO	PE1CE	5.29						
		Recurring Collocation Cable Records - VG/DS0 Cable, per each 100 pair			CLO	PE1CT	0.08						
		Recurring Collocation Cable Records - DS1, per T1TIE			CLO	PE1C2	0.04						
		Recurring Collocation Cable Records - DS3, per T3TIE			CLO	PE1C4	0.13						
		Recurring Collocation Cable Records - Fiber Cable, per 99 fiber records			CLO	PE1CG	1.37						
		Physical Collocation - Security Escort for Basic Time - normally scheduled work, per half hour			CLO	PE1BT		16.44	10.42				
		Physical Collocation - Security Escort for Overtime - outside of normally scheduled working hours on a scheduled work day, per half hour			CLO	PE1OT		21.41	13.45				
		Physical Collocation - Security Escort for Premium Time - outside of scheduled work day, per half hour			CLO	PE1PT		26.38	16.49				
		Physical Collocation - Virtual to Physical Collocation Relocation, per Voice Grade Circuit			CLO	PE1BV		33.00					
		Physical Collocation - Virtual to Physical Collocation Relocation, per DSO Circuit			CLO	PE1BO		33.00					
		Physical Collocation - Virtual to Physical Collocation Relocation, per DS1 Circuit			CLO	PE1B1		52.00					
		Physical Collocation - Virtual to Physical Collocation Relocation, per DS3 Circuit			CLO	PE1B3		52.00					
		Physical Collocation - Virtual to Physical Collocation In-Place, Per Voice Grade Circuit			CLO	PE1BR		23.00					
		Physical Collocation Virtual to Physical Collocation In-Place, Per DSO Circuit			CLO	PE1BP		23.00					
		Physical Collocation - Virtual to Physical Collocation In-Place, Per DS1 Circuit			CLO	PE1BS		33.00					
		Physical Collocation - Virtual to Physical Collocation In-Place, per DS3 Circuit			CLO	PE1BE		37.00					

COLLOCATION - Louisiana

CATEGORY	RATE ELEMENTS	Interim	Zone	BCS	USOC	RATES ($)					Svc Order Submitted Elec per LSR	Svc Order Submitted Manually per LSR
						Rec	Nonrecurring		Nonrecurring Disconnect			
							First	Add'l	First	Add'l	SOMEC	SOMAN
	Physical Collocation - Co-Carrier Cross Connects/Direct Connect - Fiber Cable Support Structure, per linear ft., per cable			CLO	PE1ES	0.001						
	Physical Collocation - Co-Carrier Cross Connect/Direct Connect - Copper/Coax Cable Support Structure, per lin. ft., per cable			CLO	PE1DS	0.0015						
	Physical Collocation - Co-Carrier Cross Connects/Direct Connect, Application Fee, per application			CLO	PE1DT		583.30					
	Physical Collocation - Application Cost, Simple Augment			CLO	PE1KS		596.35		1.22			
	Physical Collocation - Application Cost, Minor Augment			CLO	PE1KM		836.18		1.22			
	Physical Collocation - Application Cost, Intermediate Augment			CLO	PE1K1		1,061.00		1.22			
	Physical Collocation - Application Cost, Major Augment			CLO	PE1KJ		2,418.00		1.22			
ADJACENT COLLOCATION												
	Adjacent Collocation - Space Charge per Sq. Ft.			CLOAC	PE1JA	0.0552						
	Adjacent Collocation - Electrical Facility Charge per Linear Ft.			CLOAC	PE1JC	5.61						
	Adjacent Collocation - 2-Wire Cross-Connects			UEA,UHL,UDL,UCL	PE1JE	0.0245	11.94	11.46				
	Adjacent Collocation - 4-Wire Cross-Connects			UEA,UHL,UDL,UCL	PE1JF	0.0491	12.04	11.53				
	Adjacent Collocation - DS1 Cross-Connects			USL	PE1JG	0.9605	21.39	15.47				
	Adjacent Collocation - DS3 Cross-Connects			UEA,UHL,UDL,UCL	PE1JH	13.01	20.28	14.76				
	Adjacent Collocation - 2-Fiber Cross-Connect			CLOAC	PE1JJ	2.20	20.28	14.76				
	Adjacent Collocation - 4-Fiber Cross-Connect			CLOAC	PE1JK	4.21	24.81	19.29				
	Adjacent Collocation - Application Fee			CLOAC	PE1JB		1,543.20					
	Adjacent Collocation - 120V, Single Phase Standby Power Rate per AC Breaker Amp			CLOAC	PE1JL	5.45						
	Adjacent Collocation - 240V, Single Phase Standby Power Rate per AC Breaker Amp			CLOAC	PE1JM	10.92						
	Adjacent Collocation - 120V, Three Phase Standby Power Rate per AC Breaker Amp			CLOAC	PE1JN	16.37						
	Adjacent Collocation - 277V, Three Phase Standby Power Rate per AC Breaker Amp			CLOAC	PE1JO	37.80						
PHYSICAL COLLOCATION IN THE REMOTE SITE												
	Physical Collocation in the Remote Site - Application Fee			CLORS	PE1RA		298.80					
	Cabinet Space in the Remote Site per Bay/ Rack			CLORS	PE1RB	225.39						
	Physical Collocation in the Remote Site - Security Access - Key			CLORS	PE1RD		13.01					
	Physical Collocation in the Remote Site - Space Availability Report per Premises Requested			CLORS	PE1SR		112.52					
	Physical Collocation in the Remote Site - Remote Site CLLI Code Request, per CLLI Code Requested			CLORS	PE1RE		36.47					
	Remote Site DLEC Data (BRSDD), per Compact Disk, per CO			CLORS	PE1RR		233.21					
	Physical Collocation - Security Escort for Basic Time - normally scheduled work, per half hour			CLORS	PE1BT		16.44	10.42				
	Physical Collocation - Security Escort for Overtime - outside of normally scheduled working hours on a scheduled work day, per half hour			CLORS	PE1OT		21.41	13.45				
	Physical Collocation - Security Escort for Premium Time - outside of scheduled work day, per half hour			CLORS	PE1PT		26.38	16.49				
PHYSICAL COLLOCATION IN THE REMOTE SITE - ADJACENT												

COLLOCATION - Louisiana

CATEGORY	RATE ELEMENTS	Interim	Zone	BCS	USOC	RATES ($)					Svc Order Submitted Elec per LSR	Svc Order Submitted Manually per LSR
						Rec	Nonrecurring		Nonrecurring Disconnect			
							First	Add'l	First	Add'l	SOMEC	SOMAN
	Remote Site-Adjacent Collocation - AC Power, per breaker amp			CLORS	PE1RS	6.27						
	Remote Site-Adjacent Collocation - Real Estate, per square foot			CLORS	PE1RT	0.134						
	Remote Site-Adjacent Collocation-Application Fee			CLORS	PE1RU		755.62	755.62				
	NOTE: If Security Escort and/or Add'l Engineering Fees become necessary for remote site collocation, the Parties will negotiate appropriate rates.											
VIRTUAL REMOTE SITE COLLOCATION												
	Virtual Collocation in the Remote Site - Application Fee			VE1RS	VE1RB		614.73		336.08			
	Virtual Collocation in the Remote Site - Per Bay/Rack of Space			VE1RS	VE1RC	257.01						
	Virtual Collocation in the Remote Site - Space Availability Report per Premises requested			VE1RS	VE1RR		231.49					
	Virtual Collocation in the Remote Site - Remote Site CLLI Code Request, per CLLI Code Requested			VE1RS	VE1RL		75.02					
VIRTUAL COLLOCATION												
	Virtual Collocation - Application Fee			AMTFS	EAF		1,770.40					
	Virtual Collocation Administrative Only - Application Fee			AMTFS	VE1AF		741.97					
	Virtual Collocation - Cable Installation Cost, per cable			AMTFS	ESPCX		841.54					
	Virtual Collocation - Floor Space, per sq. ft.			AMTFS	ESPVX	3.20						
	Virtual Collocation - Power, per fused amp			AMTFS	ESPAX	8.32						
	Virtual Collocation - Cable Support Structure, per entrance cable			AMTFS	ESPSX	16.02						
	Virtual Collocation - 2-wire Cross Connects (loop)			UEANL,UEA,UDN,UDC,UAL,UHL,UCL,UEQ, UNCVX, UNCDX, UNCNX	UEAC2	0.0296	11.94	11.46				
	Virtual Collocation - 4-wire Cross Connects (loop)			UEA,UHL,UCL,UDL, UAL, UDN, UNCVX, UNCDX	UEAC4	0.0591	12.04	11.53				
	Virtual Collocation - 2-Fiber Cross Connects			UDL12, UDLO3, U1T48, U1T12, U1TO3, ULDO3, ULD12, ULD48, UDF	CNC2F	2.65	20.29	14.76				
	Virtual Collocation - 4-Fiber Cross Connects			UDL12, UDLO3, U1T48, U1T12, U1TO3, ULDO3, ULD12, ULD48, UDF	CNC4F	5.31	24.81	19.29				
	Virtual collocation - Special Access & UNE, cross-connect per DS1			USL, ULR, UXTD1, UNC1X, ULDD1, U1TD1, USLEL, UNLD1, UEPEX, UEPDX	CNC1X	1.04	21.39	15.47				

COLLOCATION - Louisiana

CATEGORY	RATE ELEMENTS	Interim	Zone	BCS	USOC	RATES ($)					Svc Order Submitted Elec per LSR	Svc Order Submitted Manually per LSR
						Rec	Nonrecurring		Nonrecurring Disconnect			
							First	Add'l	First	Add'l	SOMEC	SOMAN
	Virtual collocation - Special Access & UNE, cross-connect per DS3			USL,UE3, U1TD3, UXTS1, UXTD3, UNC3X, UNCSX, ULDD3, U1TS1, ULDS1, UDLSX, UNLD3	CND3X	13.21	20.28	14.76				
	Virtual Collocation - Co-Carrier Cross Connect/Direct Connect, Application Fee, per application			AMTFS	VE1CA		583.30					
	Virtual Collocation - Co-Carrier Cross Connects/Direct Connect - Fiber Cable Support Structure, per linear foot, per cable			AMTFS	VE1CB	0.001						
	Virtual Collocation - Co-Carrier Cross Connects/Direct Connect - Copper/Coax Cable Support Structure, per linear ft, per cable			AMTFS	VE1CD	0.0015						
	Virtual Collocation Cable Records - per request			AMTFS	VE1BA	10.97						
	Virtual Collocation Cable Records - VG/DS0 Cable, per cable record			AMTFS	VE1BB	5.29						
	Virtual Collocation Cable Records - VG/DS0 Cable, per each 100 pair			AMTFS	VE1BC	0.08						
	Virtual Collocation Cable Records - DS1, per T1TIE			AMTFS	VE1BD	0.04						
	Virtual Collocation Cable Records - DS3, per T3TIE			AMTFS	VE1BE	0.13						
	Virtual Collocation Cable Records - Fiber Cable, per 99 fiber records			AMTFS	VE1BF	1.37						
	Virtual collocation - Security Escort - Basic, per half hour			AMTFS	SPTBX		16.44	10.42				
	Virtual collocation - Security Escort - Overtime, per half hour			AMTFS	SPTOX		21.41	13.45				
	Virtual collocation - Security Escort - Premium, per half hour			AMTFS	SPTPX		26.38	16.49				
	Virtual collocation - Maintenance in CO - Basic, per half hour			AMTFS	CTRLX		27.12	10.42				
	Virtual collocation - Maintenance in CO - Overtime, per half hour			AMTFS	SPTOM		35.42	13.45				
	Virtual collocation - Maintenance in CO - Premium per half hour			AMTFS	SPTPM		43.72	16.49				
	Virtual Collocation - CFA Information Resend Request, per Premises, per Arrangment, per request			AMTFS	VE1QR		77.43					
VIRTUAL COLLOCATION												
	Virtual Collocation - 2-wire Cross Connect, Exchange Port 2-Wire Analog - Res			UEPSR	VE1R2	0.0296	11.94	11.46				
	Virtual Collocation 2-Wire Cross Connect, Exchange Port 2-Wire Line Side PBX Trunk - Bus			UEPSP	VE1R2	0.0296	11.94	11.46				
	Virtual Collocation 2-Wire Cross Connect, Exchange Port 2-Wire Voice Grade PBX Trunk - Res			UEPSE	VE1R2	0.0296	11.94	11.46				
	Virtual Collocation 2-Wire Cross Connect, Exchange Port 2-Wire Analog Bus			UEPSB	VE1R2	0.0296	11.94	11.46				
	Virtual Collocation 2-Wire Cross Connect, Exchnage Port 2-Wire ISDN			UEPSX	VE1R2	0.0296	11.94	11.46				
	Virtual Collocation 4-Wire Cross Connect, Exchange Port 4-Wire ISDN DS1			UEPEX	VE1R4	0.0591	12.04	11.53				
	Note: Rates displaying an "I" in the Interim Column are interim as a result of a Commission order.											

COLLOCATION - Mississippi

CATEGORY		RATE ELEMENTS	Interim	Zone	BCS	USOC	RATES ($)					Svc Order Submitted Elec per LSR	Svc Order Submitted Manually per LSR
							Rec	Nonrecurring		Nonrecurring Disconnect			
								First	Add'l	First	Add'l	SOMEC	SOMAN
PHYSICAL COLLOCATION													
		Physical Collocation 2-Wire Cross Connect, Exchange Port 2-Wire Analog - Res			UEPSR	PE1R2	0.0288	12.37	11.87	6.04	5.45		
		Physical Collocation 2-Wire Cross Connect, Exchange Port 2-Wire Line Side PBX Trunk - Bus			UEPSP	PE1R2	0.0288	12.37	11.87	6.04	5.45		
		Physical Collocation 2-Wire Cross Connect, Exchange Port 2-Wire Voice Grade PBX Trunk - Res			UEPSE	PE1R2	0.0288	12.37	11.87	6.04	5.45		
		Physical Collocation 2-Wire Cross Connect, Exchange Port 2-Wire Analog - Bus			UEPSB	PE1R2	0.0288	12.37	11.87	6.04	5.45		
		Physical Collocation 2-Wire Cross Connect, Exchange Port 2-Wire ISDN			UEPSX	PE1R2	0.0288	12.37	11.87	6.04	5.45		
		Physical Collocation 4-Wire Cross Connect, Exchange Port 4-Wire ISDN DS1			UEPEX	PE1R4	0.0576	12.47	11.94	6.59	5.91		
PHYSICAL COLLOCATION													
		Physical Collocation - Initial Application Fee			CLO	PE1BA		1,890.38					
		Physical Collocation - Subsequent Application Fee			CLO	PE1CA		1,575.69					
		Physical Collocation Administrative Only - Application Fee			CLO	PE1BL		740.76					
		Physical Collocation - Space Preparation - Firm Order Processing			CLO	PE1SJ		604.19					
		Physical Collocation - Space Preparation - C.O. Modification per square ft.			CLO	PE1SK	2.30						
		Physical Collocation - Space Preparation, Common Systems Modifications-Cageless, per square foot			CLO	PE1SL	2.52						
		Physical Collocation - Space Preparation - Common Systems Modifications-Caged, per cage			CLO	PE1SM	85.67						
		Physical Collocation - Cable Installation, Pricing, non-recurring charge, per Entrance Cable			CLO	PE1BD		926.27		22.62			
		Physical Collocation - Floor Space, per sq feet			CLO	PE1PJ	5.74						
		Physical Collocation - Cable Support Structure, per Entrance Cable			CLO	PE1PM	17.42						
		Physical Collocation - Power, -48V DC Power - per Fused Amp Requested			CLO	PE1PL	7.33						
		Physical Collocation - Power, -48V DC Power, Grandfathered Site, per Fused Amp Requested			CLO	PE1FT	3.35						
		Physical Collocation - Power, -48V DC Power, Measured AC Usage, per Used Amp, per Power Feed ("A" or "B" Feed)			CLO	PE1FU	3.37						
		Physical Collocation - Power, -48V DC Power, Infrastructure Capital and Expense Costs, per Fused Amp Requested			CLO	PE1FV	5.08						
		Physical Collocation - Power, -48V DC Power, Grandfathered Site, Infrastructure Expense Costs, per Fused Amp Requested			CLO	PE1FW	1.10						
		Physical Collocation - Power, -48V DC Power, Meter Reading - per CLEC per CO, First 12 Circuits w/BST Meter			CLO	PE1FO	102.24						
		Physical Collocation - Power, -48V DC Power, Meter Reading - per CLEC per CO, per Each Additional 2 Circuits w/BST Meter			CLO	PE1FP	8.94						
		Physical Collocation - Power, -48V DC Power, Meter Reading - per CLEC per CO, First 12 Circuits w/CLEC Meter			CLO	PE1FQ	98.25						

COLLOCATION - Mississippi

CATEGORY		RATE ELEMENTS	Interim	Zone	BCS	USOC	RATES ($)					Svc Order Submitted Elec per LSR	Svc Order Submitted Manually per LSR
							Rec	Nonrecurring		Nonrecurring Disconnect			
								First	Add'l	First	Add'l	SOMEC	SOMAN
		Physical Collocation - Power, -48V DC Power, Meter Reading - per CLEC per CO, per Each Additional 2 Circuits w/CLEC Meter			CLO	PE1FR	8.94						
		Physical Collocation - Power, -48V DC Power, Additional Meter Reading Trip Charge, per Central Office per Occurrence			CLO	PE1FM		307.64					
		Physical Collocation - Power, 120V AC Power, Single Phase, per Breaker Amp			CLO	PE1FB	5.29						
		Physical Collocation - Power, 240V AC Power, Single Phase, per Breaker Amp			CLO	PE1FD	10.58						
		Physical Collocation - Power, 120V AC Power, Three Phase, per Breaker Amp			CLO	PE1FE	15.87						
		Physical Collocation - Power, 277V AC Power, Three Phase, per Breaker Amp			CLO	PE1FG	36.65						
		Physical Collocation - 2-wire cross-connect, loop, provisioning			UEANL,UEQ, UNCNX, UEA, UCL, UAL, UHL, UDC, UDN, UNCVX	PE1P2	0.0288	12.37	11.87	6.04	5.45		
		Physical Collocation - 4-wire cross-connect, loop, provisioning			UEA, UHL, UNCVX, UNCDX, UCL, UDL	PE1P4	0.0576	12.47	11.94	6.59	5.91		
		Physical Collocation -DS1 Cross-Connect for Physical Collocation, provisioning			WDS1L,WDS1S, UXTD1, ULDD1, USLEL, UNLD1, UEPEX, UEPDX, USL, U1TD1, UNC1X	PE1P1	1.14	22.16	16.02	6.60	5.97		
		Physical Collocation - DS3 Cross-Connect, provisioning			UE3,U1TD3, UXTD3, UXTS1, UNC3X, UNCSX, ULDD3, U1TS1,ULDS1, UNLD3	PE1P3	14.49	21.01	15.29	7.61	6.10		
		Physical Collocation - 2-Fiber Cross-Connect			CLO, ULDO3, ULD12, ULD48, U1TO3, U1T12, U1T48, UDLO3, UDL12, UDF	PE1F2	2.87	21.01	15.29	7.61	6.10		
		Physical Collocation - 4-Fiber Cross-Connect			ULDO3, ULD12, ULD48, U1TO3, U1T12, U1T48, UDLO3, UDL12, UDF	PE1F4	5.10	25.70	19.97	10.01	8.50		
		Physical Collocation - Space enclosure, welded wire, first 100 square feet			CLO	PE1BW	183.20						
		Physical Collocation - Space enclosure, welded wire, 50 square feet			CLO	PE1BX	165.23						
		Physical Collocation - Space enclosure, welded wire, each additional 50 square feet			CLO	PE1CW	17.97						

COLLOCATION - Mississippi

CATEGORY		RATE ELEMENTS	Interim	Zone	BCS	USOC	RATES ($)					Svc Order Submitted Elec per LSR	Svc Order Submitted Manually per LSR
							Rec	Nonrecurring		Nonrecurring Disconnect			
								First	Add'l	First	Add'l	SOMEC	SOMAN
		Physical Collocation - Security Access System, Security System, per Central Office			CLO	PE1AX	75.23						
		Physical Collocation -Security Access System - New Card Activation, per Card Activation (First), per State			CLO	PE1A1	0.0576	27.95					
		Physical Collocation-Security Access System-Administrative Change, existing Access Card, per Request, per State, per Card			CLO	PE1AA		7.84					
		Physical Collocation - Security Access System - Replace Lost or Stolen Card, per Card			CLO	PE1AR		22.91					
		Physical Collocation - Security Access - Initial Key, per Key			CLO	PE1AK		13.17					
		Physical Collocation - Security Access - Key, Replace Lost or Stolen Key, per Key			CLO	PE1AL		13.17					
		Physical Collocation - Space Availability Report, per Central Office Requested			CLO	PE1SR		1,081.40					
		Physical Collocation - CFA Information Resend Request, per premises, per arrangment, per request			CLO	PE1C9		77.41					
		Physical Collocation - Cable Records, per request			CLO	PE1CR		I 763.69	S 490.94	133.77			
		Physical Collocation, Cable Records, VG/DS0 Cable, per cable record (maximum 3600 records)			CLO	PE1CD		328.81		190.22			
		Physical Collocation, Cable Records, VG/DS0 Cable, per each 100 pair			CLO	PE1CO		4.84		5.93			
		Physical Collocation, Cable Records, DS1, per T1 TIE			CLO	PE1C1		2.27		2.78			
		Physical Collocation, Cable Records, DS3, per T3 TIE			CLO	PE1C3		7.92		9.72			
		Physical Collocation - Cable Records, Fiber Cable, per cable record (maximum 99 records)			CLO	PE1CB		84.98		77.58			
		Physical Collocation - Security Escort for Basic Time - normally scheduled work, per half hour			CLO	PE1BT		17.02	10.79				
		Physical Collocation - Security Escort for Overtime - outside of normally scheduled working hours on a scheduled work day, per half hour			CLO	PE1OT		22.17	13.94				
		Physical Collocation - Security Escort for Premium Time - outside of scheduled work day, per half hour			CLO	PE1PT		27.32	17.08				
		Physical Collocation - Virtual to Physical Collocation Relocation, per Voice Grade Circuit			CLO	PE1BV		33.00					
		Physical Collocation - Virtual to Physical Collocation Relocation, per DSO Circuit			CLO	PE1BO		33.00					
		Physical Collocation - Virtual to Physical Collocation Relocation, per DS1 Circuit			CLO	PE1B1		52.00					
		Physical Collocation - Virtual to Physical Collocation Relocation, per DS3 Circuit			CLO	PE1B3		52.00					
		Physical Collocation - Virtual to Physical Collocation In-Place, Per Voice Grade Circuit			CLO	PE1BR		23.00					
		Physical Collocation Virtual to Physical Collocation In-Place, Per DSO Circuit			CLO	PE1BP		23.00					
		Physical Collocation - Virtual to Physical Collocation In-Place, Per DS1 Circuit			CLO	PE1BS		33.00					
		Physical Collocation - Virtual to Physical Collocation In-Place, per DS3 Circuit			CLO	PE1BE		37.00					

COLLOCATION - Mississippi

CATEGORY	RATE ELEMENTS	Interim	Zone	BCS	USOC	RATES ($)					Svc Order Submitted Elec per LSR	Svc Order Submitted Manually per LSR
						Rec	Nonrecurring		Nonrecurring Disconnect			
							First	Add'l	First	Add'l	SOMEC	SOMAN
	Physical Collocation - Co-Carrier Cross Connects/Direct Connect - Fiber Cable Support Structure, per linear ft., per cable			CLO	PE1ES	0.001						
	Physical Collocation - Co-Carrier Cross Connect/Direct Connect - Copper/Coax Cable Support Structure, per lin. ft., per cable			CLO	PE1DS	0.0015						
	Physical Collocation - Co-Carrier Cross Connects/Direct Connect, Application Fee, per application			CLO	PE1DT		583.13					
	Physical Collocation - Application Cost, Simple Augment			CLO	PE1KS		597.34		1.22			
	Physical Collocation - Application Cost, Minor Augment			CLO	PE1KM		837.57		1.22			
	Physical Collocation - Application Cost, Intermediate Augment			CLO	PE1K1		1,063.00		1.22			
	Physical Collocation - Application Cost, Major Augment			CLO	PE1KJ		2,422.00		1.22			
ADJACENT COLLOCATION												
	Adjacent Collocation - Space Charge per Sq. Ft.			CLOAC	PE1JA	0.0678						
	Adjacent Collocation - Electrical Facility Charge per Linear Ft.			CLOAC	PE1JC	4.68						
	Adjacent Collocation - 2-Wire Cross-Connects			UEA,UHL,UDL,UCL	PE1JE	0.0223	12.37	11.87	6.04	5.45		
	Adjacent Collocation - 4-Wire Cross-Connects			UEA,UHL,UDL,UCL	PE1JF	0.0446	12.47	11.94	6.59	5.91		
	Adjacent Collocation - DS1 Cross-Connects			USL	PE1JG	1.05	22.16	16.02	6.60	5.97		
	Adjacent Collocation - DS3 Cross-Connects			UEA,UHL,UDL,UCL	PE1JH	14.27	21.01	15.29	7.61	6.10		
	Adjacent Collocation - 2-Fiber Cross-Connect			CLOAC	PE1JJ	2.42	21.01	15.29	7.61	6.10		
	Adjacent Collocation - 4-Fiber Cross-Connect			CLOAC	PE1JK	4.62	25.70	19.97	10.01	8.50		
	Adjacent Collocation - Application Fee			CLOAC	PE1JB		1,585.83					
	Adjacent Collocation - 120V, Single Phase Standby Power Rate per AC Breaker Amp			CLOAC	PE1JL	5.29						
	Adjacent Collocation - 240V, Single Phase Standby Power Rate per AC Breaker Amp			CLOAC	PE1JM	10.58						
	Adjacent Collocation - 120V, Three Phase Standby Power Rate per AC Breaker Amp			CLOAC	PE1JN	15.87						
	Adjacent Collocation - 277V, Three Phase Standby Power Rate per AC Breaker Amp			CLOAC	PE1JO	36.65						
PHYSICAL COLLOCATION IN THE REMOTE SITE												
	Physical Collocation in the Remote Site - Application Fee			CLORS	PE1RA		309.48		168.63			
	Cabinet Space in the Remote Site per Bay/ Rack			CLORS	PE1RB	210.05						
	Physical Collocation in the Remote Site - Security Access - Key			CLORS	PE1RD		13.17					
	Physical Collocation in the Remote Site - Space Availability Report per Premises Requested			CLORS	PE1SR		116.54					
	Physical Collocation in the Remote Site - Remote Site CLLI Code Request, per CLLI Code Requested			CLORS	PE1RE		37.77					
	Remote Site DLEC Data (BRSDD), per Compact Disk, per CO			CLORS	PE1RR		233.14					
	Physical Collocation - Security Escort for Basic Time - normally scheduled work, per half hour			CLORS	PE1BT		17.02	10.79				
	Physical Collocation - Security Escort for Overtime - outside of normally scheduled working hours on a scheduled work day, per half hour			CLORS	PE1OT		22.17	13.94				
	Physical Collocation - Security Escort for Premium Time - outside of scheduled work day, per half hour			CLORS	PE1PT		27.32	17.08				
PHYSICAL COLLOCATION IN THE REMOTE SITE - ADJACENT												

COLLOCATION - Mississippi

CATEGORY	RATE ELEMENTS	Interim	Zone	BCS	USOC	RATES ($)					Svc Order Submitted Elec per LSR	Svc Order Submitted Manually per LSR
						Rec	Nonrecurring		Nonrecurring Disconnect			
							First	Add'l	First	Add'l	SOMEC	SOMAN
	Remote Site-Adjacent Collocation - AC Power, per breaker amp			CLORS	PE1RS	6.27						
	Remote Site-Adjacent Collocation - Real Estate, per square foot			CLORS	PE1RT	0.134						
	Remote Site-Adjacent Collocation-Application Fee			CLORS	PE1RU		755.62	755.62				
	NOTE: If Security Escort and/or Add'l Engineering Fees become necessary for remote site collocation, the Parties will negotiate appropriate rates.											
VIRTUAL REMOTE SITE COLLOCATION												
	Virtual Collocation in the Remote Site - Application Fee			VE1RS	VE1RB		309.48		168.63			
	Virtual Collocation in the Remote Site - Per Bay/Rack of Space			VE1RS	VE1RC	210.05						
	Virtual Collocation in the Remote Site - Space Availability Report per Premises requested			VE1RS	VE1RR		116.54					
	Virtual Collocation in the Remote Site - Remote Site CLLI Code Request, per CLLI Code Requested			VE1RS	VE1RL		37.77					
VIRTUAL COLLOCATION												
	Virtual Collocation - Application Fee			AMTFS	EAF		1,212.25		0.51			
	Virtual Collocation Administrative Only - Application Fee			AMTFS	VE1AF		740.76					
	Virtual Collocation - Cable Installation Cost, per cable			AMTFS	ESPCX		926.27		22.62			
	Virtual Collocation - Floor Space, per sq. ft.			AMTFS	ESPVX	5.74						
	Virtual Collocation - Power, per fused amp			AMTFS	ESPAX	7.33						
	Virtual Collocation - Cable Support Structure, per entrance cable			AMTFS	ESPSX	15.24						
	Virtual Collocation - 2-wire Cross Connects (loop)			UEANL,UEA,UDN,UDC,UAL,UHL,UCL,UEQ, UNCVX, UNCDX, UNCNX	UEAC2	0.0268	12.37	11.87	6.04	5.45		
	Virtual Collocation - 4-wire Cross Connects (loop)			UEA,UHL,UCL,UDL, UAL, UDN, UNCVX, UNCDX	UEAC4	0.0536	12.47	11.94	6.59	5.91		
	Virtual Collocation - 2-Fiber Cross Connects			UDL12, UDLO3, U1T48, U1T12, U1TO3, ULDO3, ULD12, ULD48, UDF	CNC2F	2.91	21.01	15.29	7.61	6.10		
	Virtual Collocation - 4-Fiber Cross Connects			UDL12, UDLO3, U1T48, U1T12, U1TO3, ULDO3, ULD12, ULD48, UDF	CNC4F	5.82	25.70	19.97	10.01	8.50		
	Virtual Collocation - Special Access & UNE, cross-connect per DS1			USL, ULR, UXTD1, UNC1X, ULDD1, U1TD1, USLEL, UNLD1, UEPEX, UEPDX	CNC1X	1.14	22.16	16.02	6.60	5.97		

COLLOCATION - Mississippi

CATEGORY	RATE ELEMENTS	Interim	Zone	BCS	USOC	RATES ($)					Svc Order Submitted Elec per LSR	Svc Order Submitted Manually per LSR
						Rec	Nonrecurring		Nonrecurring Disconnect			
							First	Add'l	First	Add'l	SOMEC	SOMAN
	Virtual collocation - Special Access & UNE, cross-connect per DS3			USL,UE3, U1TD3, UXTS1, UXTD3, UNC3X, UNCSX, ULDD3, U1TS1, ULDS1, UDLSX, UNLD3	CND3X	14.49	21.01	15.29	7.61	6.10		
	Virtual Collocation - Co-Carrier Cross Connect/Direct Connect, Application Fee, per application			AMTFS	VE1CA		583.13					
	Virtual Collocation - Co-Carrier Cross Connects/Direct Connect - Fiber Cable Support Structure, per linear foot, per cable			AMTFS	VE1CB	0.001						
	Virtual Collocation - Co-Carrier Cross Connects/Direct Connect - Copper/Coax Cable Support Structure, per linear ft, per cable			AMTFS	VE1CD	0.0015						
	Virtual Collocation Cable Records - per request			AMTFS	VE1BA		I 763.69	S 490.94	133.77			
	Virtual Collocation Cable Records - VG/DS0 Cable, per cable record			AMTFS	VE1BB		328.81		190.22			
	Virtual Collocation Cable Records - VG/DS0 Cable, per each 100 pair			AMTFS	VE1BC		4.84		5.93			
	Virtual Collocation Cable Records - DS1, per T1TIE			AMTFS	VE1BD		2.27		2.78			
	Virtual Collocation Cable Records - DS3, per T3TIE			AMTFS	VE1BE		7.92		9.72			
	Virtual Collocation Cable Records - Fiber Cable, per 99 fiber records			AMTFS	VE1BF		84.98		77.58			
	Virtual collocation - Security Escort - Basic, per half hour			AMTFS	SPTBX		17.02	10.79				
	Virtual collocation - Security Escort - Overtime, per half hour			AMTFS	SPTOX		22.17	13.94				
	Virtual collocation - Security Escort - Premium, per half hour			AMTFS	SPTPX		27.32	17.08				
	Virtual collocation - Maintenance in CO - Basic, per half hour			AMTFS	CTRLX		28.09	10.79				
	Virtual collocation - Maintenance in CO - Overtime, per half hour			AMTFS	SPTOM		36.69	13.94				
	Virtual collocation - Maintenance in CO - Premium per half hour			AMTFS	SPTPM		45.28	17.08				
	Virtual Collocation - CFA Information Resend Request, per Premises, per arrangement, per request			AMTFS	VE1QR		77.41					
VIRTUAL COLLOCATION												
	Virtual Collocation - 2-wire Cross Connect, Exchange Port 2-Wire Analog - Res			UEPSR	VE1R2	0.0268	12.37	11.87	6.04	5.45		
	Virtual Collocation 2-Wire Cross Connect, Exchange Port 2-Wire Line Side PBX Trunk - Bus			UEPSP	VE1R2	0.0268	12.37	11.87	6.04	5.45		
	Virtual Collocation 2-Wire Cross Connect, Exchange Port 2-Wire Voice Grade PBX Trunk - Res			UEPSE	VE1R2	0.0268	12.37	11.87	6.04	5.45		
	Virtual Collocation 2-Wire Cross Connect, Exchange Port 2-Wire Analog Bus			UEPSB	VE1R2	0.0268	12.37	11.87	6.04	5.45		
	Virtual Collocation 2-Wire Cross Connect, Exchnage Port 2-Wire ISDN			UEPSX	VE1R2	0.0268	12.37	11.87	6.04	5.45		
	Virtual Collocation 4-Wire Cross Connect, Exchange Port 4-Wire ISDN DS1			UEPEX	VE1R4	0.0536	12.47	11.94	6.59	5.91		
	Note: Rates displaying an "I" in the Interim column are interim as a result of a Commission order.											

COLLOCATION - North Carolina

CATEGORY		RATE ELEMENTS	Interim	Zone	BCS	USOC	RATES ($)					Svc Order Submitted Elec per LSR	Svc Order Submitted Manually per LSR
							Rec	Nonrecurring		Nonrecurring Disconnect			
								First	Add'l	First	Add'l	SOMEC	SOMAN
PHYSICAL COLLOCATION													
		Physical Collocation 2-Wire Cross Connect, Exchange Port 2-Wire Analog - Res			UEPSR	PE1R2	0.0309	19.77	14.95				
		Physical Collocation 2-Wire Cross Connect, Exchange Port 2-Wire Line Side PBX Trunk - Bus			UEPSP	PE1R2	0.0309	19.77	14.95				
		Physical Collocation 2-Wire Cross Connect, Exchange Port 2-Wire Voice Grade PBX Trunk - Res			UEPSE	PE1R2	0.0309	19.77	14.95				
		Physical Collocation 2-Wire Cross Connect, Exchange Port 2-Wire Analog - Bus			UEPSB	PE1R2	0.0309	19.77	14.95				
		Physical Collocation 2-Wire Cross Connect, Exchange Port 2-Wire ISDN			UEPSX	PE1R2	0.0309	19.77	14.95				
		Physical Collocation 4-Wire Cross Connect, Exchange Port 4-Wire ISDN DS1			UEPEX	PE1R4	0.0618	19.95	15.05				
PHYSICAL COLLOCATION													
		Physical Collocation - Initial Application Fee			CLO	PE1BA		2,322.00					
		Physical Collocation - Subsequent Application Fee			CLO	PE1CA		2,311.00					
		Physical Collocation Administrative Only - Application Fee			CLO	PE1BL		741.44					
		Physical Collocation - Space Preparation - Firm Order Processing			CLO	PE1SJ		1,196.00					
		Physical Collocation - Space Preparation - C.O. Modification per square ft.			CLO	PE1SK	2.42						
		Physical Collocation - Space Preparation, Common Systems Modifications-Cageless, per square foot			CLO	PE1SL	2.88						
		Physical Collocation - Space Preparation - Common Systems Modifications-Caged, per cage			CLO	PE1SM	97.98						
		Physical Collocation - Cable Installation, Pricing, non-recurring charge, per Entrance Cable			CLO	PE1BD		1,233.00					
		Physical Collocation - Floor Space, per sq feet			CLO	PE1PJ	2.69						
		Physical Collocation - Cable Support Structure, per Entrance Cable			CLO	PE1PM	20.57						
		Physical Collocation - Power, -48V DC Power - per Fused Amp Requested			CLO	PE1PL	7.65						
		Physical Collocation - Power, -48V DC Power, Grandfathered Site, per Fused Amp Requested			CLO	PE1FT	2.44						
		Physical Collocation - Power, -48V DC Power, Measured AC Usage, per Used Amp, per Power Feed ("A" or "B" Feed)			CLO	PE1FU	2.05						
		Physical Collocation - Power, -48V DC Power, Infrastructure Capital and Expense Costs, per Fused Amp Requested			CLO	PE1FV	6.28						
		Physical Collocation - Power, -48V DC Power, Grandfathered Site, Infrastructure Expense Costs, per Fused Amp Requested			CLO	PE1FW	1.07						
		Physical Collocation - Power, -48V DC Power, Meter Reading - per CLEC per CO, First 12 Circuits w/BST Meter			CLO	PE1FO	102.24						
		Physical Collocation - Power, -48V DC Power, Meter Reading - per CLEC per CO, per Each Additional 2 Circuits w/BST Meter			CLO	PE1FP	8.94						
		Physical Collocation - Power, -48V DC Power, Meter Reading - per CLEC per CO, First 12 Circuits w/CLEC Meter			CLO	PE1FQ	98.25						

COLLOCATION - North Carolina

CATEGORY		RATE ELEMENTS	Interim	Zone	BCS	USOC	RATES ($)					Svc Order Submitted Elec per LSR	Svc Order Submitted Manually per LSR
							Rec	Nonrecurring		Nonrecurring Disconnect			
								First	Add'l	First	Add'l	SOMEC	SOMAN
		Physical Collocation - Power, -48V DC Power, Meter Reading - per CLEC per CO, per Each Additional 2 Circuits w/CLEC Meter			CLO	PE1FR	8.94						
		Physical Collocation - Power, -48V DC Power, Additional Meter Reading Trip Charge, per Central Office per Occurrence			CLO	PE1FM		307.64					
		Physical Collocation - Power, 120V AC Power, Single Phase, per Breaker Amp			CLO	PE1FB	5.50						
		Physical Collocation - Power, 240V AC Power, Single Phase, per Breaker Amp			CLO	PE1FD	11.01						
		Physical Collocation - Power, 120V AC Power, Three Phase, per Breaker Amp			CLO	PE1FE	16.51						
		Physical Collocation - Power, 277V AC Power, Three Phase, per Breaker Amp			CLO	PE1FG	38.12						
		Physical Collocation - 2-wire cross-connect, loop, provisioning			UEANL,UEQ, UNCNX, UEA, UCL, UAL, UHL, UDC, UDN, UNCVX	PE1P2	0.0309	19.77	14.95				
		Physical Collocation - 4-wire cross-connect, loop, provisioning			UEA, UHL, UNCVX, UNCDX, UCL, UDL	PE1P4	0.0618	19.95	15.05				
		Physical Collocation -DS1 Cross-Connect for Physical Collocation, provisioning			WDS1L,WDS1S, UXTD1, ULDD1, USLEL, UNLD1, UEPEX, UEPDX, USL, U1TD1, UNC1X	PE1P1	1.38	39.15	23.20				
		Physical Collocation - DS3 Cross-Connect, provisioning			UE3,U1TD3, UXTD3, UXTS1, UNC3X, UNCSX, ULDD3, U1TS1,ULDS1, UNLD3	PE1P3	17.62	38.25	21.94				
		Physical Collocation - 2-Fiber Cross-Connect			CLO, ULDO3, ULD12, ULD48, U1TO3, U1T12, U1T48, UDLO3, UDL12, UDF	PE1F2	3.50	38.25	21.94				
		Physical Collocation - 4-Fiber Cross-Connect			ULDO3, ULD12, ULD48, U1TO3, U1T12, U1T48, UDLO3, UDL12, UDF	PE1F4	6.20	43.96	26.17				
		Physical Collocation - Space enclosure, welded wire, first 100 square feet			CLO	PE1BW		559.81					
		Physical Collocation - Space enclosure, welded wire, 50 square feet			CLO	PE1BX		534.44					
		Physical Collocation - Space enclosure, welded wire, each additional 50 square feet			CLO	PE1CW		25.37					

COLLOCATION - North Carolina

CATEGORY		RATE ELEMENTS	Interim	Zone	BCS	USOC	RATES ($)					Svc Order Submitted Elec per LSR	Svc Order Submitted Manually per LSR
							Rec	Nonrecurring		Nonrecurring Disconnect			
								First	Add'l	First	Add'l	SOMEC	SOMAN
		Physical Collocation - Security Access System - Security System per Central Office, per Sq. Ft.			CLO	PE1AY	0.0135						
		Physical Collocation -Security Access System - New Card Activation, per Card Activation (First), per State			CLO	PE1A1	0.0622	15.00					
		Physical Collocation-Security Access System-Administrative Change, existing Access Card, per Request, per State, per Card			CLO	PE1AA		15.51					
		Physical Collocation - Security Access System - Replace Lost or Stolen Card, per Card			CLO	PE1AR		15.00					
		Physical Collocation - Security Access - Initial Key, per Key			CLO	PE1AK		15.00					
		Physical Collocation - Security Access - Key, Replace Lost or Stolen Key, per Key			CLO	PE1AL		15.00					
		Physical Collocation - Space Availability Report, per Central Office Requested			CLO	PE1SR		2,140.00	2,140.00				
		Physical Collocation - CFA Information Resend Request, per premises, per arrangement, per request			CLO	PE1C9		77.48					
		Physical Collocation - Cable Records, per request			CLO	PE1CR		I 1458	S 937.29	245.00	245.00		
		Physical Collocation, Cable Records, VG/DS0 Cable, per cable record (maximum 3600 records)			CLO	PE1CD		622.69	622.69	346.35	346.35		
		Physical Collocation, Cable Records, VG/DS0 Cable, per each 100 pair			CLO	PE1CO		8.77	8.77	10.32	10.32		
		Physical Collocation, Cable Records, DS1, per T1 TIE			CLO	PE1C1		4.35	4.35	5.11	5.11		
		Physical Collocation, Cable Records, DS3, per T3 TIE			CLO	PE1C3		15.22	15.22	17.90	17.90		
		Physical Collocation - Cable Records, Fiber Cable, per cable record (maximum 99 records)			CLO	PE1CB		163.61	163.61	143.32	143.32		
		Physical Collocation - Security Escort for Basic Time - normally scheduled work, per half hour			CLO	PE1BT		33.68	21.34				
		Physical Collocation - Security Escort for Overtime - outside of normally scheduled working hours on a scheduled work day, per half hour			CLO	PE1OT		43.87	27.57				
		Physical Collocation - Security Escort for Premium Time - outside of scheduled work day, per half hour			CLO	PE1PT		54.06	33.80				
		Physical Collocation - Virtual to Physical Collocation Relocation, per Voice Grade Circuit			CLO	PE1BV		33.00					
		Physical Collocation - Virtual to Physical Collocation Relocation, per DSO Circuit			CLO	PE1BO		33.00					
		Physical Collocation - Virtual to Physical Collocation Relocation, per DS1 Circuit			CLO	PE1B1		52.00					
		Physical Collocation - Virtual to Physical Collocation Relocation, per DS3 Circuit			CLO	PE1B3		52.00					
		Physical Collocation - Virtual to Physical Collocation In-Place, Per Voice Grade Circuit			CLO	PE1BR		23.00					
		Physical Collocation Virtual to Physical Collocation In-Place, Per DSO Circuit			CLO	PE1BP		23.00					
		Physical Collocation - Virtual to Physical Collocation In-Place, Per DS1 Circuit			CLO	PE1BS		33.00					
		Physical Collocation - Virtual to Physical Collocation In-Place, per DS3 Circuit			CLO	PE1BE		37.00					

COLLOCATION - North Carolina

CATEGORY	RATE ELEMENTS	Interim	Zone	BCS	USOC	RATES ($)					Svc Order Submitted Elec per LSR	Svc Order Submitted Manually per LSR
						Rec	Nonrecurring		Nonrecurring Disconnect			
							First	Add'l	First	Add'l	SOMEC	SOMAN
	Physical Collocation - Co-Carrier Cross Connects/Direct Connect - Fiber Cable Support Structure, per linear ft., per cable			CLO	PE1ES	0.0028						
	Physical Collocation - Co-Carrier Cross Connect/Direct Connect - Copper/Coax Cable Support Structure, per lin. ft. per cable			CLO	PE1DS	0.0041						
	Physical Collocation - Co-Carrier Cross Connects/Direct Connect, Application Fee, per application			CLO	PE1DT		317.20					
	Physical Collocation - Application Cost, Simple Augment			CLO	PE1KS		269.83		1.15			
	Physical Collocation - Application Cost, Minor Augment			CLO	PE1KM		493.40		1.15			
	Physical Collocation - Application Cost, Intermediate Augment			CLO	PE1K1		1,012.00		1.15			
	Physical Collocation - Application Cost, Major Augment			CLO	PE1KJ		2,343.00		1.15			
ADJACENT COLLOCATION												
	Adjacent Collocation - Space Charge per Sq. Ft.			CLOAC	PE1JA	0.1555						
	Adjacent Collocation - Electrical Facility Charge per Linear Ft.			CLOAC	PE1JC	5.78						
	Adjacent Collocation - 2-Wire Cross-Connects			UEA,UHL,UDL,UCL	PE1JE	0.0239	19.77	14.95				
	Adjacent Collocation - 4-Wire Cross-Connects			UEA,UHL,UDL,UCL	PE1JF	0.0477	19.95	15.05				
	Adjacent Collocation - DS1 Cross-Connects			USL	PE1JG	1.28	39.15	23.20				
	Adjacent Collocation - DS3 Cross-Connects			UEA,UHL,UDL,UCL	PE1JH	17.35	38.25	21.94				
	Adjacent Collocation - 2-Fiber Cross-Connect			CLOAC	PE1JJ	2.94	38.25	21.94				
	Adjacent Collocation - 4-Fiber Cross-Connect			CLOAC	PE1JK	5.62	43.96	26.17				
	Adjacent Collocation - Application Fee			CLOAC	PE1JB		2,266.00		0.5842			
	Adjacent Collocation - 120V, Single Phase Standby Power Rate per AC Breaker Amp			CLOAC	PE1JL	5.50						
	Adjacent Collocation - 240V, Single Phase Standby Power Rate per AC Breaker Amp			CLOAC	PE1JM	11.01						
	Adjacent Collocation - 120V, Three Phase Standby Power Rate per AC Breaker Amp			CLOAC	PE1JN	16.51						
	Adjacent Collocation - 277V, Three Phase Standby Power Rate per AC Breaker Amp			CLOAC	PE1JO	38.12						
PHYSICAL COLLOCATION IN THE REMOTE SITE												
	Physical Collocation in the Remote Site - Application Fee			CLORS	PE1RA		589.38		258.38			
	Cabinet Space in the Remote Site per Bay/ Rack			CLORS	PE1RB	218.07						
	Physical Collocation in the Remote Site - Security Access - Key			CLORS	PE1RD		15.00					
	Physical Collocation in the Remote Site - Space Availability Report per Premises Requested			CLORS	PE1SR		215.55					
	Physical Collocation in the Remote Site - Remote Site CLLI Code Request, per CLLI Code Requested			CLORS	PE1RE		70.65					
	Remote Site DLEC Data (BRSDD), per Compact Disk, per CO			CLORS	PE1RR		232.94					
	Physical Collocation - Security Escort for Basic Time - normally scheduled work, per half hour			CLORS	PE1BT		33.68	21.34				
	Physical Collocation - Security Escort for Overtime - outside of normally scheduled working hours on a scheduled work day, per half hour			CLORS	PE1OT		43.87	27.57				
	Physical Collocation - Security Escort for Premium Time - outside of scheduled work day, per half hour			CLORS	PE1PT		54.06	33.80				
PHYSICAL COLLOCATION IN THE REMOTE SITE - ADJACENT												

COLLOCATION - North Carolina

CATEGORY	RATE ELEMENTS	Interim	Zone	BCS	USOC	RATES ($)					Svc Order Submitted Elec per LSR	Svc Order Submitted Manually per LSR
						Rec	Nonrecurring		Nonrecurring Disconnect			
							First	Add'l	First	Add'l	SOMEC	SOMAN
	Remote Site-Adjacent Collocation - AC Power, per breaker amp			CLORS	PE1RS	6.27						
	Remote Site-Adjacent Collocation - Real Estate, per square foot			CLORS	PE1RT	0.134						
	Remote Site-Adjacent Collocation-Application Fee			CLORS	PE1RU		755.62	755.62				
	NOTE: If Security Escort and/or Add'l Engineering Fees become necessary for remote site collocation, the Parties will negotiate appropriate rates.											
VIRTUAL REMOTE SITE COLLOCATION												
	Virtual Collocation in the Remote Site - Application Fee			VE1RS	VE1RB		589.38		258.38			
	Virtual Collocation in the Remote Site - Per Bay/Rack of Space			VE1RS	VE1RC	218.07						
	Virtual Collocation in the Remote Site -Space Availability Report per Premises Requested			VE1RS	VE1RR		215.55					
	Virtual Collocation in the Remote Site - Remote Site CLLI Code Request, per CLLI Code Requested			VE1RS	VE1RL		70.65					
VIRTUAL COLLOCATION												
	Virtual Collocation - Application Fee			AMTFS	EAF		1,195.00					
	Virtual Collocation Administrative Only - Application Fee			AMTFS	VE1AF		741.44					
	Virtual Collocation - Cable Installation Cost, per cable			AMTFS	ESPCX		1,233.00					
	Virtual Collocation - Floor Space, per sq. ft.			AMTFS	ESPVX	2.69						
	Virtual Collocation - Power, per fused amp			AMTFS	ESPAX	7.65						
	Virtual Collocation - Cable Support Structure, per entrance cable			AMTFS	ESPSX	13.28						
	Virtual Collocation - 2-wire Cross Connects (loop)			UEANL,UEA,UDN,UDC,UAL,UHL,UCL,UEQ, UNCVX, UNCDX, UNCNX	UEAC2	0.0225	19.77	14.95				
	Virtual Collocation - 4-wire Cross Connects (loop)			UEA,UHL,UCL,UDL, UAL, UDN, UNCVX, UNCDX	UEAC4	0.0449	19.95	15.05				
	Virtual Collocation - 2-Fiber Cross Connects			UDL12, UDLO3, U1T48, U1T12, U1TO3, ULDO3, ULD12, ULD48, UDF	CNC2F	1.96	38.25	21.94				
	Virtual Collocation - 4-Fiber Cross Connects			UDL12, UDLO3, U1T48, U1T12, U1TO3, ULDO3, ULD12, ULD48, UDF	CNC4F	3.93	43.96	26.17				
	Virtual collocation - Special Access & UNE, cross-connect per DS1			USL, ULR, UXTD1, UNC1X, ULDD1, U1TD1, USLEL, UNLD1, UEPEX, UEPDX	CNC1X	0.4195	39.15	23.20				

COLLOCATION - North Carolina

CATEGORY	RATE ELEMENTS	Interim	Zone	BCS	USOC	RATES ($)					Svc Order Submitted Elec per LSR	Svc Order Submitted Manually per LSR
						Rec	Nonrecurring		Nonrecurring Disconnect			
							First	Add'l	First	Add'l	SOMEC	SOMAN
	Virtual collocation - Special Access & UNE, cross-connect per DS3			USL,UE3, U1TD3, UXTS1, UXTD3, UNC3X, UNCSX, ULDD3, U1TS1, ULDS1, UDLSX, UNLD3	CND3X	4.41	38.25	21.94				
	Virtual Collocation - Co-Carrier Cross Connect/Direct Connect, Application Fee, per application			AMTFS	VE1CA		317.20					
	Virtual Collocation - Co-Carrier Cross Connects/Direct Connect - Fiber Cable Support Structure, per linear foot, per cable			AMTFS	VE1CB	0.0028						
	Virtual Collocation - Co-Carrier Cross Connects/Direct Connect - Copper/Coax Cable Support Structure, per linear ft, per cable			AMTFS	VE1CD	0.0041						
	Virtual Collocation Cable Records - per request			AMTFS	VE1BA		I 1458	S 937.29	245.00	245.00		
	Virtual Collocation Cable Records - VG/DS0 Cable, per cable record			AMTFS	VE1BB		622.69	622.69	346.35	346.35		
	Virtual Collocation Cable Records - VG/DS0 Cable, per each 100 pair			AMTFS	VE1BC		8.77	8.77	10.32	10.32		
	Virtual Collocation Cable Records - DS1, per T1TIE			AMTFS	VE1BD		4.35	4.35	5.11	5.11		
	Virtual Collocation Cable Records - DS3, per T3TIE			AMTFS	VE1BE		15.22	15.22	17.9	17.9		
	Virtual Collocation Cable Records - Fiber Cable, per 99 fiber records			AMTFS	VE1BF		163.61	163.61	143.32	143.32		
	Virtual collocation - Security Escort - Basic, per half hour			AMTFS	SPTBX		33.68	21.34				
	Virtual collocation - Security Escort - Overtime, per half hour			AMTFS	SPTOX		43.87	27.57				
	Virtual collocation - Security Escort - Premium, per half hour			AMTFS	SPTPX		54.06	33.80				
	Virtual collocation - Maintenance in CO - Basic, per half hour			AMTFS	CTRLX		52.03	21.22				
	Virtual collocation - Maintenance in CO - Overtime, per half hour			AMTFS	SPTOM		69.48	27.81				
	Virtual collocation - Maintenance in CO - Premium per half hour			AMTFS	SPTPM		86.94	34.40				
	Virtual Collocation - CFA Information Resend Request, per Premises, per arrangement, per request			AMTFS	VE1QR		77.48					
VIRTUAL COLLOCATION												
	Virtual Collocation - 2-wire Cross Connect, Exchange Port 2-Wire Analog - Res			UEPSR	VE1R2	0.0225	19.77	14.95				
	Virtual Collocation 2-Wire Cross Connect, Exchange Port 2-Wire Line Side PBX Trunk - Bus			UEPSP	VE1R2	0.0225	19.77	14.95				
	Virtual Collocation 2-Wire Cross Connect, Exchange Port 2-Wire Voice Grade PBX Trunk - Res			UEPSE	VE1R2	0.0225	19.77	14.95				
	Virtual Collocation 2-Wire Cross Connect, Exchange Port 2-Wire Analog Bus			UEPSB	VE1R2	0.0225	19.77	14.95				
	Virtual Collocation 2-Wire Cross Connect, Exchnage Port 2-Wire ISDN			UEPSX	VE1R2	0.0225	19.77	14.95				
	Virtual Collocation 4-Wire Cross Connect, Exchange Port 4-Wire ISDN DS1			UEPEX	VE1R4	0.0449	19.95	15.05				
	Note: Rates displaying an "I" in the Interim column are interim as a result of a Commission order.											

COLLOCATION - South Carolina

CATEGORY		RATE ELEMENTS	Interim	Zone	BCS	USOC	RATES ($)					Svc Order Submitted Elec per LSR	Svc Order Submitted Manually per LSR
							Rec	Nonrecurring		Nonrecurring Disconnect			
								First	Add'l	First	Add'l	SOMEC	SOMAN
PHYSICAL COLLOCATION													
		Physical Collocation 2-Wire Cross Connect, Exchange Port 2-Wire Analog - Res			UEPSR	PE1R2	0.0341	12.32	11.83	6.04	5.45		
		Physical Collocation 2-Wire Cross Connect, Exchange Port 2-Wire Line Side PBX Trunk - Bus			UEPSP	PE1R2	0.0341	12.32	11.83	6.04	5.45		
		Physical Collocation 2-Wire Cross Connect, Exchange Port 2-Wire Voice Grade PBX Trunk - Res			UEPSE	PE1R2	0.0341	12.32	11.83	6.04	5.45		
		Physical Collocation 2-Wire Cross Connect, Exchange Port 2-Wire Analog - Bus			UEPSB	PE1R2	0.0341	12.32	11.83	6.04	5.45		
		Physical Collocation 2-Wire Cross Connect, Exchange Port 2-Wire ISDN			UEPSX	PE1R2	0.0341	12.32	11.83	6.04	5.45		
		Physical Collocation 4-Wire Cross Connect, Exchange Port 4-Wire ISDN DS1			UEPEX	PE1R4	0.0682	12.42	11.90	6.40	5.74		
PHYSICAL COLLOCATION													
		Physical Collocation - Initial Application Fee			CLO	PE1BA		1,883.67		0.51			
		Physical Collocation - Subsequent Application Fee			CLO	PE1CA		1,570.10		0.51			
		Physical Collocation Administrative Only - Application Fee			CLO	PE1BL		743.66					
		Physical Collocation - Space Preparation - Firm Order Processing			CLO	PE1SJ		602.05					
		Physical Collocation - Space Preparation - C.O. Modification per square ft.			CLO	PE1SK	2.75						
		Physical Collocation - Space Preparation, Common Systems Modifications-Cageless, per square foot			CLO	PE1SL	3.24						
		Physical Collocation - Space Preparation - Common Systems Modifications-Caged, per cage			CLO	PE1SM	110.16						
		Physical Collocation - Cable Installation, Pricing, non-recurring charge, per Entrance Cable			CLO	PE1BD		794.22		22.54			
		Physical Collocation - Floor Space, per sq feet			CLO	PE1PJ	3.95						
		Physical Collocation - Cable Support Structure, per Entrance Cable			CLO	PE1PM	21.33						
		Physical Collocation - Power, -48V DC Power - per Fused Amp Requested			CLO	PE1PL	9.19						
		Physical Collocation - Power, -48V DC Power, Grandfathered Site, per Fused Amp Requested			CLO	PE1FT	3.77						
		Physical Collocation - Power, -48V DC Power, Measured AC Usage, per Used Amp, per Power Feed ("A" or "B" Feed)			CLO	PE1FU	3.35						
		Physical Collocation - Power, -48V DC Power, Infrastructure Capital and Expense Costs, per Fused Amp Requested			CLO	PE1FV	6.95						
		Physical Collocation - Power, -48V DC Power, Grandfathered Site, Infrastructure Expense Costs, per Fused Amp Requested			CLO	PE1FW	1.53						
		Physical Collocation - Power, -48V DC Power, Meter Reading - per CLEC per CO, First 12 Circuits w/BST Meter			CLO	PE1FO	102.24						
		Physical Collocation - Power, -48V DC Power, Meter Reading - per CLEC per CO, per Each Additional 2 Circuits w/BST Meter			CLO	PE1FP	8.94						
		Physical Collocation - Power, -48V DC Power, Meter Reading - per CLEC per CO, First 12 Circuits w/CLEC Meter			CLO	PE1FQ	98.25						

COLLOCATION - South Carolina

CATEGORY		RATE ELEMENTS	Interim	Zone	BCS	USOC	RATES ($)					Svc Order Submitted Elec per LSR	Svc Order Submitted Manually per LSR
							Rec	Nonrecurring		Nonrecurring Disconnect			
								First	Add'l	First	Add'l	SOMEC	SOMAN
		Physical Collocation - Power, -48V DC Power, Meter Reading - per CLEC per CO, per Each Additional 2 Circuits w/CLEC Meter			CLO	PE1FR	8.94						
		Physical Collocation - Power, -48V DC Power, Additional Meter Reading Trip Charge, per Central Office per Occurrence			CLO	PE1FM		307.64					
		Physical Collocation - Power, 120V AC Power, Single Phase, per Breaker Amp			CLO	PE1FB	5.67						
		Physical Collocation - Power, 240V AC Power, Single Phase, per Breaker Amp			CLO	PE1FD	11.36						
		Physical Collocation - Power, 120V AC Power, Three Phase, per Breaker Amp			CLO	PE1FE	17.03						
		Physical Collocation - Power, 277V AC Power, Three Phase, per Breaker Amp			CLO	PE1FG	39.33						
		Physical Collocation - 2-wire cross-connect, loop, provisioning			UEANL,UEQ, UNCNX, UEA, UCL, UAL, UHL, UDC, UDN, UNCVX	PE1P2	0.0341	12.32	11.83	6.04	5.45		
		Physical Collocation - 4-wire cross-connect, loop, provisioning			UEA, UHL, UNCVX, UNCDX, UCL, UDL	PE1P4	0.0682	12.42	11.90	6.40	5.74		
		Physical Collocation -DS1 Cross-Connect for Physical Collocation, provisioning			WDS1L,WDS1S, UXTD1, ULDD1, USLEL, UNLD1, UEPEX, UEPDX, USL, U1TD1, UNC1X	PE1P1	1.12	22.08	15.96	6.42	5.80		
		Physical Collocation - DS3 Cross-Connect, provisioning			UE3,U1TD3, UXTD3, UXTS1, UNC3X, UNCSX, ULDD3, U1TS1,ULDS1, UNLD3	PE1P3	14.21	20.94	15.23	7.39	5.93		
		Physical Collocation - 2-Fiber Cross-Connect			CLO, ULDO3, ULD12, ULD48, U1TO3, U1T12, U1T48, UDLO3, UDL12, UDF	PE1F2	2.82	20.94	15.23	7.40	5.93		
		Physical Collocation - 4-Fiber Cross-Connect			ULDO3, ULD12, ULD48, U1TO3, U1T12, U1T48, UDLO3, UDL12, UDF	PE1F4	5.01	25.61	19.90	9.73	8.26		
		Physical Collocation - Space enclosure, welded wire, first 100 square feet			CLO	PE1BW	219.19						
		Physical Collocation - Space enclosure, welded wire, 50 square feet			CLO	PE1BX	197.69						
		Physical Collocation - Space enclosure, welded wire, each additional 50 square feet			CLO	PE1CW	21.50						

COLLOCATION - South Carolina

CATEGORY		RATE ELEMENTS	Interim	Zone	BCS	USOC	RATES ($)					Svc Order Submitted Elec per LSR	Svc Order Submitted Manually per LSR
							Rec	Nonrecurring		Nonrecurring Disconnect			
								First	Add'l	First	Add'l	SOMEC	SOMAN
		Physical Collocation - Security Access System, Security System, per Central Office			CLO	PE1AX	74.72						
		Physical Collocation -Security Access System - New Card Activation, per Card Activation (First), per State			CLO	PE1A1	0.0601	27.85					
		Physical Collocation-Security Access System-Administrative Change, existing Access Card, per Request, per State, per Card			CLO	PE1AA		7.81					
		Physical Collocation - Security Access System - Replace Lost or Stolen Card, per Card			CLO	PE1AR		22.83					
		Physical Collocation - Security Access - Initial Key, per Key			CLO	PE1AK		13.13					
		Physical Collocation - Security Access - Key, Replace Lost or Stolen Key, per Key			CLO	PE1AL		13.13					
		Physical Collocation - Space Availability Report, per Central Office Requested			CLO	PE1SR		1,077.57					
		Physical Collocation - CFA Information Resend Request, per premises, per arrangement ,per request			CLO	PE1C9		77.71					
		Physical Collocation - Cable Records, per request			CLO	PE1CR		I 760.98	S 489.2	133.29			
		Physical Collocation, Cable Records, VG/DS0 Cable, per cable record (maximum 3600 records)			CLO	PE1CD		327.65		189.54			
		Physical Collocation, Cable Records, VG/DS0 Cable, per each 100 pair			CLO	PE1CO		4.82		5.91			
		Physical Collocation, Cable Records, DS1, per T1 TIE			CLO	PE1C1		2.26		2.77			
		Physical Collocation, Cable Records, DS3, per T3 TIE			CLO	PE1C3		7.90		9.68			
		Physical Collocation - Cable Records, Fiber Cable, per cable record (maximum 99 records)			CLO	PE1CB		84.68		77.30			
		Physical Collocation - Security Escort for Basic Time - normally scheduled work, per half hour			CLO	PE1BT		16.96	10.75				
		Physical Collocation - Security Escort for Overtime - outside of normally scheduled working hours on a scheduled work day, per half hour			CLO	PE1OT		22.10	13.89				
		Physical Collocation - Security Escort for Premium Time - outside of scheduled work day, per half hour			CLO	PE1PT		27.23	17.02				
		Physical Collocation - Virtual to Physical Collocation Relocation, per Voice Grade Circuit			CLO	PE1BV		33.00					
		Physical Collocation - Virtual to Physical Collocation Relocation, per DSO Circuit			CLO	PE1BO		33.00					
		Physical Collocation - Virtual to Physical Collocation Relocation, per DS1 Circuit			CLO	PE1B1		52.00					
		Physical Collocation - Virtual to Physical Collocation Relocation, per DS3 Circuit			CLO	PE1B3		52.00					
		Physical Collocation - Virtual to Physical Collocation In-Place, Per Voice Grade Circuit			CLO	PE1BR		23.00					
		Physical Collocation Virtual to Physical Collocation In-Place, Per DSO Circuit			CLO	PE1BP		23.00					
		Physical Collocation - Virtual to Physical Collocation In-Place, Per DS1 Circuit			CLO	PE1BS		33.00					
		Physical Collocation - Virtual to Physical Collocation In-Place, per DS3 Circuit			CLO	PE1BE		37.00					

COLLOCATION - South Carolina

CATEGORY	RATE ELEMENTS	Interim	Zone	BCS	USOC	RATES ($)					Svc Order Submitted Elec per LSR	Svc Order Submitted Manually per LSR
						Rec	Nonrecurring		Nonrecurring Disconnect			
							First	Add'l	First	Add'l	SOMEC	SOMAN
	Physical Collocation - Co-Carrier Cross Connects/Direct Connect - Fiber Cable Support Structure, per linear ft., per cable			CLO	PE1ES	0.001						
	Physical Collocation - Co-Carrier Cross Connect/Direct Connect - Copper/Coax Cable Support Structure, per lin. ft., per cable			CLO	PE1DS	0.0015						
	Physical Collocation - Co-Carrier Cross Connects/Direct Connect, Application Fee, per application			CLO	PE1DT		584.42					
	Physical Collocation - Application Cost, Simple Augment			CLO	PE1KS		594.27		1.21			
	Physical Collocation - Application Cost, Minor Augment			CLO	PE1KM		833.26		1.21			
	Physical Collocation - Application Cost, Intermediate Augment			CLO	PE1K1		1,058.00		1.21			
	Physical Collocation - Application Cost, Major Augment			CLO	PE1KJ		2,409.00		1.21			
ADJACENT COLLOCATION												
	Adjacent Collocation - Space Charge per Sq. Ft.			CLOAC	PE1JA	0.0939						
	Adjacent Collocation - Electrical Facility Charge per Linear Ft.			CLOAC	PE1JC	6.40						
	Adjacent Collocation - 2-Wire Cross-Connects			UEA,UHL,UDL,UCL	PE1JE	0.0264	12.32	11.83	6.04	5.45		
	Adjacent Collocation - 4-Wire Cross-Connects			UEA,UHL,UDL,UCL	PE1JF	0.0527	12.42	11.90	6.40	5.74		
	Adjacent Collocation - DS1 Cross-Connects			USL	PE1JG	1.03	22.08	15.96	6.42	5.80		
	Adjacent Collocation - DS3 Cross-Connects			UEA,UHL,UDL,UCL	PE1JH	14.00	20.94	15.23	7.39	5.93		
	Adjacent Collocation - 2-Fiber Cross-Connect			CLOAC	PE1JJ	2.37	20.94	15.23	7.40	5.93		
	Adjacent Collocation - 4-Fiber Cross-Connect			CLOAC	PE1JK	4.53	25.61	19.90	9.73	8.26		
	Adjacent Collocation - Application Fee			CLOAC	PE1JB		1,580.20					
	Adjacent Collocation - 120V, Single Phase Standby Power Rate per AC Breaker Amp			CLOAC	PE1JL	5.67						
	Adjacent Collocation - 240V, Single Phase Standby Power Rate per AC Breaker Amp			CLOAC	PE1JM	11.36						
	Adjacent Collocation - 120V, Three Phase Standby Power Rate per AC Breaker Amp			CLOAC	PE1JN	17.03						
	Adjacent Collocation - 277V, Three Phase Standby Power Rate per AC Breaker Amp			CLOAC	PE1JO	39.33						
PHYSICAL COLLOCATION IN THE REMOTE SITE												
	Physical Collocation in the Remote Site - Application Fee			CLORS	PE1RA		308.38		168.60			
	Cabinet Space in the Remote Site per Bay/ Rack			CLORS	PE1RB	246.44						
	Physical Collocation in the Remote Site - Security Access - Key			CLORS	PE1RD		13.13					
	Physical Collocation in the Remote Site - Space Availability Report per Premises Requested			CLORS	PE1SR		116.13					
	Physical Collocation in the Remote Site - Remote Site CLLI Code Request, per CLLI Code Requested			CLORS	PE1RE		37.64					
	Remote Site DLEC Data (BRSDD), per Compact Disk, per CO			CLORS	PE1RR		234.50					
	Physical Collocation - Security Escort for Basic Time - normally scheduled work, per half hour			CLORS	PE1BT		16.96	10.75				
	Physical Collocation - Security Escort for Overtime - outside of normally scheduled working hours on a scheduled work day, per half hour			CLORS	PE1OT		22.10	13.89				
	Physical Collocation - Security Escort for Premium Time - outside of scheduled work day, per half hour			CLORS	PE1PT		27.23	17.02				
PHYSICAL COLLOCATION IN THE REMOTE SITE - ADJACENT												

COLLOCATION - South Carolina

CATEGORY	RATE ELEMENTS	Interim	Zone	BCS	USOC	RATES ($)					Svc Order Submitted Elec per LSR	Svc Order Submitted Manually per LSR
						Rec	Nonrecurring		Nonrecurring Disconnect			
							First	Add'l	First	Add'l	SOMEC	SOMAN
	Remote Site-Adjacent Collocation - AC Power, per breaker amp			CLORS	PE1RS	6.27						
	Remote Site-Adjacent Collocation - Real Estate, per square foot			CLORS	PE1RT	0.134						
	Remote Site-Adjacent Collocation-Application Fee			CLORS	PE1RU		755.62	755.62				
	NOTE: If Security Escort and/or Add'l Engineering Fees become necessary for remote site collocation, the Parties will negotiate appropriate rates.											
VIRTUAL REMOTE SITE COLLOCATION												
	Virtual Collocation in the Remote Site - Application Fee			VE1RS	VE1RB		616.76		337.19			
	Virtual Collocation in the Remote Site - Per Bay/Rack of Space			VE1RS	VE1RC	246.44						
	Virtual Collocation in the Remote Site - Space Availability Report per Premises requested			VE1RS	VE1RR		232.25					
	Virtual Collocation in the Remote Site - Remote Site CLLI Code Request, per CLLI Code Requested			VE1RS	VE1RL		75.27					
VIRTUAL COLLOCATION												
	Virtual Collocation - Application Fee			AMTFS	EAF		1,207.95		0.51			
	Virtual Collocation Administrative Only - Application Fee			AMTFS	VE1AF		743.66					
	Virtual Collocation - Cable Installation Cost, per cable			AMTFS	ESPCX		794.22		22.54			
	Virtual Collocation - Floor Space, per sq. ft.			AMTFS	ESPVX	3.95						
	Virtual Collocation - Power, per fused amp			AMTFS	ESPAX	9.19						
	Virtual Collocation - Cable Support Structure, per entrance cable			AMTFS	ESPSX	18.66						
	Virtual Collocation - 2-wire Cross Connects (loop)			UEANL,UEA,UDN,UDC,UAL,UHL,UCL,UEQ, UNCVX, UNCDX, UNCNX	UEAC2	0.0317	12.32	11.83	6.04	5.45		
	Virtual Collocation - 4-wire Cross Connects (loop)			UEA,UHL,UCL,UDL, UAL, UDN, UNCVX, UNCDX	UEAC4	0.0634	12.42	11.90	6.40	5.74		
	Virtual Collocation - 2-Fiber Cross Connects			UDL12, UDLO3, U1T48, U1T12, U1TO3, ULDO3, ULD12, ULD48, UDF	CNC2F	2.86	20.94	15.23	7.40	5.93		
	Virtual Collocation - 4-Fiber Cross Connects			UDL12, UDLO3, U1T48, U1T12, U1TO3, ULDO3, ULD12, ULD48, UDF	CNC4F	5.71	25.61	19.90	9.73	8.26		
	Virtual collocation - Special Access & UNE,cross-connect per DS1			USL, ULR, UXTD1, UNC1X, ULDD1, U1TD1, USLEL, UNLD1, UEPEX, UEPDX	CNC1X	1.12	22.08	15.96	6.42	5.80		

COLLOCATION - South Carolina

CATEGORY	RATE ELEMENTS	Interim	Zone	BCS	USOC	RATES ($)					Svc Order Submitted Elec per LSR	Svc Order Submitted Manually per LSR
						Rec	Nonrecurring		Nonrecurring Disconnect			
							First	Add'l	First	Add'l	SOMEC	SOMAN
	Virtual collocation - Special Access & UNE, cross-connect per DS3			USL,UE3, U1TD3, UXTS1, UXTD3, UNC3X, UNCSX, ULDD3, U1TS1, ULDS1, UDLSX, UNLD3	CND3X	14.21	20.94	15.23	7.39	5.93		
	Virtual Collocation - Co-Carrier Cross Connect/Direct Connect, Application Fee, per application			AMTFS	VE1CA		584.42					
	Virtual Collocation - Co-Carrier Cross Connects/Direct Connect - Fiber Cable Support Structure, per linear foot, per cable			AMTFS	VE1CB	0.001						
	Virtual Collocation - Co-Carrier Cross Connects/Direct Connect - Copper/Coax Cable Support Structure, per linear ft., per cable			AMTFS	VE1CD	0.0015						
	Virtual Collocation Cable Records - per request			AMTFS	VE1BA		760.98	489.20	133.29			
	Virtual Collocation Cable Records - VG/DS0 Cable, per cable record			AMTFS	VE1BB		327.65		189.54			
	Virtual Collocation Cable Records - VG/DS0 Cable, per each 100 pair			AMTFS	VE1BC		4.82		5.91			
	Virtual Collocation Cable Records - DS1, per T1TIE			AMTFS	VE1BD		2.26		2.77			
	Virtual Collocation Cable Records - DS3, per T3TIE			AMTFS	VE1BE		7.90		9.68			
	Virtual Collocation Cable Records - Fiber Cable, per 99 fiber records			AMTFS	VE1BF		84.68		77.30			
	Virtual collocation - Security Escort - Basic, per half hour			AMTFS	SPTBX		16.96	10.75				
	Virtual collocation - Security Escort - Overtime, per half hour			AMTFS	SPTOX		22.10	13.89				
	Virtual collocation - Security Escort - Premium, per half hour			AMTFS	SPTPX		27.23	17.02				
	Virtual collocation - Maintenance in CO - Basic, per half hour			AMTFS	CTRLX		27.99	10.75				
	Virtual collocation - Maintenance in CO - Overtime, per half hour			AMTFS	SPTOM		36.56	13.89				
	Virtual collocation - Maintenance in CO - Premium per half hour			AMTFS	SPTPM		45.12	17.02				
	Virtual Collocation - CFA Information Resend Request, per Premises, per arrangement, per request			AMTFS	VE1QR		77.71					
VIRTUAL COLLOCATION												
	Virtual Collocation - 2-wire Cross Connect, Exchange Port 2-Wire Analog - Res			UEPSR	VE1R2	0.0317	12.32	11.83	6.04	5.45		
	Virtual Collocation 2-Wire Cross Connect, Exchange Port 2-Wire Line Side PBX Trunk - Bus			UEPSP	VE1R2	0.0317	12.32	11.83	6.04	5.45		
	Virtual Collocation 2-Wire Cross Connect, Exchange Port 2-Wire Voice Grade PBX Trunk - Res			UEPSE	VE1R2	0.0317	12.32	11.83	6.04	5.45		
	Virtual Collocation 2-Wire Cross Connect, Exchange Port 2-Wire Analog Bus			UEPSB	VE1R2	0.0317	12.32	11.83	6.04	5.45		
	Virtual Collocation 2-Wire Cross Connect, Exchnage Port 2-Wire ISDN			UEPSX	VE1R2	0.0317	12.32	11.83	6.04	5.45		
	Virtual Collocation 4-Wire Cross Connect, Exchange Port 4-Wire ISDN DS1			UEPEX	VE1R4	0.0634	12.42	11.90	6.40	5.74		
	Note: Rates displaying an "I" in the Interim column are interim as a result of a Commission order.											

COLLOCATION - Tennessee

CATEGORY		RATE ELEMENTS	Interim	Zone	BCS	USOC	RATES ($)					Svc Order Submitted Elec per LSR	Svc Order Submitted Manually per LSR
							Rec	Nonrecurring		Nonrecurring Disconnect			
								First	Add'l	First	Add'l	SOMEC	SOMAN
PHYSICAL COLLOCATION													
		Physical Collocation 2-Wire Cross Connect, Exchange Port 2-Wire Analog - Res			UEPSR	PE1R2	0.033	33.82	31.92				
		Physical Collocation 2-Wire Cross Connect, Exchange Port 2-Wire Line Side PBX Trunk - Bus			UEPSP	PE1R2	0.033	33.82	31.92				
		Physical Collocation 2-Wire Cross Connect, Exchange Port 2-Wire Voice Grade PBX Trunk - Res			UEPSE	PE1R2	0.033	33.82	31.92				
		Physical Collocation 2-Wire Cross Connect, Exchange Port 2-Wire Analog - Bus			UEPSB	PE1R2	0.033	33.82	31.92				
		Physical Collocation 2-Wire Cross Connect, Exchange Port 2-Wire ISDN			UEPSX	PE1R2	0.033	33.82	31.92				
		Physical Collocation 4-Wire Cross Connect, Exchange Port 4-Wire ISDN DS1			UEPEX	PE1R4	0.066	33.94	31.95				
PHYSICAL COLLOCATION													
		Physical Caged Collocation - App Cost (initial & sub) - Planning, per request			CLO	PE1AC	16.16	2,903.66					
		Physical Collocation - Cageless - Application Fee			CLO	PE1CH		2,633.00					
		Physical Collocation Administrative Only - Application Fee			CLO	PE1BL		743.25					
		Physical Collocation - Space Preparation - Firm Order Processing			CLO	PE1SJ		1,204.00					
		Physical Collocation - Space Preparation - C.O. Modification per square ft.			CLO	PE1SK	2.74						
		Physical Collocation - Space Preparation, Common Systems Modifications-Cageless, per square foot			CLO	PE1SL	2.95						
		Physical Collocation - Space Preparation - Common Systems Modifications-Caged, per cage			CLO	PE1SM	100.14						
		Physical Collocation - Floor Space, per sq feet			CLO	PE1PJ	5.94						
		Physical Collocation - Cable Support Structure, per Entrance Cable			CLO	PE1PM	19.80						
		Physical Collocation - Power, -48V DC Power, per Fused Amp Requested			CLO	PE1PL	8.87						
		Physical Collocation - Power, -48V DC Power, Caged, Power, Consumption, per Used Amp, per Power Feed ("A" or "B" Feed) - TN Only			CLO	PE1FY	2.03						
		Physical Collocation - Power, -48V DC Power, Caged, Power Construction, per Fused Amp Requested - TN Only			CLO	PE1FX	3.55						
		Physical Collocation - Power, -48V DC Cageless, Power, per Fused Amp Requested - TN Only			CLO	PE1F5	6.79						
		Physical Collocation - Power, -48V DC Power, Cageless, Grandfathered Site, per Fused Amp Requested - TN Only			CLO	PE1F6	2.72						
		Physical Collocation - Power, -48V DC Power, Cageless, Measured AC Usage, per Used Amp, per Power Feed ("A" or "B" Feed) - TN Only			CLO	PE1F7	2.66						
		Physical Collocation - Power, -48V DC Power, Cageless, Infrastructure Capital and Expense Costs, per Fused Amp Requested - TN Only			CLO	PE1F8	5.02						

COLLOCATION - Tennessee

CATEGORY		RATE ELEMENTS	Interim	Zone	BCS	USOC	RATES ($)					Svc Order Submitted Elec per LSR	Svc Order Submitted Manually per LSR
							Rec	Nonrecurring		Nonrecurring Disconnect			
								First	Add'l	First	Add'l	SOMEC	SOMAN
		Physical Collocation - Power, -48V DC Power, Cageless, Grandfathered Site, Infrastructure Expense Costs, per Fused Amp Requested - TN Only			CLO	PE1F9	0.95						
		Physical Collocation - Power, -48V DC Power, Meter Reading - per CLEC per CO, First 12 Circuits w/BST Meter			CLO	PE1FO	102.24						
		Physical Collocation - Power, -48V DC Power, Meter Reading - per CLEC per CO, per Each Additional 2 Circuits w/BST Meter			CLO	PE1FP	8.94						
		Physical Collocation - Power, -48V DC Power, Meter Reading - per CLEC per CO, First 12 Circuits w/CLEC Meter			CLO	PE1FQ	98.25						
		Physical Collocation - Power, -48V DC Power, Meter Reading - per CLEC per CO, per Each Additional 2 Circuits w/CLEC Meter			CLO	PE1FR	8.94						
		Physical Collocation - Power, -48V DC Power, Additional Meter Reading Trip Charge, per Central Office per Occurrence			CLO	PE1FM		307.64					
		Physical Collocation - Power Reconfiguration Only, Application Fee			CLO	PE1PR		400.10					
		Physical Collocation - Power, 120V AC Power, Single Phase, per Breaker Amp			CLO	PE1FB	5.60						
		Physical Collocation - Power, 240V AC Power, Single Phase, per Breaker Amp			CLO	PE1FD	11.22						
		Physical Collocation - Power, 120V AC Power, Three Phase, per Breaker Amp			CLO	PE1FE	16.82						
		Physical Collocation - Power, 277V AC Power, Three Phase, per Breaker Amp			CLO	PE1FG	38.84						
		Physical Collocation - 2-wire cross-connect, loop, provisioning			UEANL,UEQ, UNCNX, UEA, UCL, UAL, UHL, UDC, UDN, UNCVX	PE1P2	0.033	33.82	31.92				
		Physical Collocation - 4-wire cross-connect, loop, provisioning			UEA, UHL, UNCVX, UNCDX, UCL, UDL	PE1P4	0.066	33.94	31.95				
		Physical Collocation -DS1 Cross-Connect for Physical Collocation, provisioning			WDS1L,WDS1S, UXTD1, ULDD1, USLEL, UNLD1, UEPEX, UEPDX, USL, U1TD1, UNC1X	PE1P1	1.51	53.27	40.16				
		Physical Collocation - DS3 Cross-Connect, provisioning			UE3,U1TD3, UXTD3, UXTS1, UNC3X, UNCSX, ULDD3, U1TS1,ULDS1, UNLD3	PE1P3	19.26	52.37	38.89				
		Physical Collocation - 2-Fiber Cross-Connect			CLO, ULDO3, ULD12, ULD48, U1TO3, U1T12, U1T48, UDLO3, UDL12, UDF	PE1F2	15.64	41.56	29.82	12.96	10.34		

COLLOCATION - Tennessee

CATEGORY		RATE ELEMENTS	Interim	Zone	BCS	USOC	RATES ($)					Svc Order Submitted Elec per LSR	Svc Order Submitted Manually per LSR
							Rec	Nonrecurring		Nonrecurring Disconnect			
								First	Add'l	First	Add'l	SOMEC	SOMAN
		Physical Collocation - 4-Fiber Cross-Connect			ULDO3, ULD12, ULD48, U1TO3, U1T12, U1T48, UDLO3, UDL12, UDF	PE1F4	28.11	50.53	38.78	16.97	14.35		
		Physical Collocation - Space enclosure, welded wire, first 100 square feet			CLO	PE1BW	218.53						
		Physical Collocation - Space enclosure, welded wire, 50 square feet			CLO	PE1BX	197.09						
		Physical Collocation - Space enclosure, welded wire, each additional 50 square feet			CLO	PE1CW	21.44						
		Physical Collocation - Security Access System - Security System per Central Office			CLO	PE1AX	55.99						
		Physical Collocation -Security Access System - New Card Activation, per Card Activation (First), per State			CLO	PE1A1	0.059	55.67					
		Physical Collocation-Security Access System-Administrative Change, existing Access Card, per Request, per State, per Card			CLO	PE1AA		15.61					
		Physical Collocation - Security Access System - Replace Lost or Stolen Card, per Card			CLO	PE1AR		45.64					
		Physical Collocation - Security Access - Initial Key, per Key			CLO	PE1AK		26.24					
		Physical Collocation - Security Access - Key, Replace Lost or Stolen Key, per Key			CLO	PE1AL		26.24					
		Physical Collocation - Space Availability Report, per Central Office Requested	I		CLO	PE1SR		2,027.00					
		Physical Collocation - CFA Information Resend Request, per premises, per arrangement, per request			CLO	PE1C9		77.67					
		Physical Collocation - Cable Records, per request			CLO	PE1CR		1,711.00					
		Physical Collocation, Cable Records, VG/DS0 Cable, per cable record (maximum 3600 records)			CLO	PE1CD		925.06					
		Physical Collocation, Cable Records, VG/DS0 Cable, per each 100 pair			CLO	PE1CO		18.05					
		Physical Collocation, Cable Records, DS1, per T1 TIE			CLO	PE1C1		8.45					
		Physical Collocation, Cable Records, DS3, per T3 TIE			CLO	PE1C3		29.57					
		Physical Collocation - Cable Records, Fiber Cable, per cable record (maximum 99 records)			CLO	PE1CB		279.42					
		Physical Collocation - Security Escort for Basic Time - normally scheduled work, per half hour			CLO	PE1BT		33.91	21.49				
		Physical Collocation - Security Escort for Overtime - outside of normally scheduled working hours on a scheduled work day, per half hour			CLO	PE1OT		44.17	27.76				
		Physical Collocation - Security Escort for Premium Time - outside of scheduled work day, per half hour			CLO	PE1PT		54.42	34.02				
		Physical Collocation - Virtual to Physical Collocation Relocation, per Voice Grade Circuit			CLO	PE1BV		33.00					
		Physical Collocation - Virtual to Physical Collocation Relocation, per DSO Circuit			CLO	PE1BO		33.00					

COLLOCATION - Tennessee

CATEGORY		RATE ELEMENTS	Interim	Zone	BCS	USOC	RATES ($)					Svc Order Submitted Elec per LSR	Svc Order Submitted Manually per LSR
							Rec	Nonrecurring		Nonrecurring Disconnect			
								First	Add'l	First	Add'l	SOMEC	SOMAN
		Physical Collocation - Virtual to Physical Collocation Relocation, per DS1 Circuit			CLO	PE1B1		52.00					
		Physical Collocation - Virtual to Physical Collocation Relocation, per DS3 Circuit			CLO	PE1B3		52.00					
		Physical Collocation - Virtual to Physical Collocation In-Place, Per Voice Grade Circuit			CLO	PE1BR		23.00					
		Physical Collocation Virtual to Physical Collocation In-Place, Per DSO Circuit			CLO	PE1BP		23.00					
		Physical Collocation - Virtual to Physical Collocation In-Place, Per DS1 Circuit			CLO	PE1BS		33.00					
		Physical Collocation - Virtual to Physical Collocation In-Place, per DS3 Circuit			CLO	PE1BE		37.00					
		Physical Collocation - Co-Carrier Cross Connects/Direct Connect - Fiber Cable Support Structure, per linear ft., per cable			CLO	PE1ES	0.0013						
		Physical Collocation - Co-Carrier Cross Connect/Direct Connect - Copper/Coax Cable Support Structure, per lin. ft., per cable			CLO	PE1DS	0.0019						
		Physical Collocation - Co-Carrier Cross Connects/Direct Connect, Application Fee, per application			CLO	PE1DT		585.09					
ADJACENT COLLOCATION													
		Adjacent Collocation - Space Charge per Sq. Ft.			CLOAC	PE1JA	0.0656						
		Adjacent Collocation - Electrical Facility Charge per Linear Ft.			CLOAC	PE1JC	5.53						
		Adjacent Collocation - 2-Wire Cross-Connects			UEA,UHL,UDL,UCL	PE1JE	0.34	11.12	10.18	11.33	10.23		
		Adjacent Collocation - 4-Wire Cross-Connects			UEA,UHL,UDL,UCL	PE1JF	0.33	11.30	10.31	11.62	10.44		
		Adjacent Collocation - DS1 Cross-Connects			USL	PE1JG	1.70	28.39	16.88	11.65	10.54		
		Adjacent Collocation - DS3 Cross-Connects			UEA,UHL,UDL,UCL	PE1JH	19.03	26.23	15.51	13.40	10.77		
		Adjacent Collocation - 2-Fiber Cross-Connect			CLOAC	PE1JJ	3.49	26.23	15.51	13.41	10.78		
		Adjacent Collocation - 4-Fiber Cross-Connect			CLOAC	PE1JK	6.50	29.75	19.02	17.60	14.97		
		Adjacent Collocation - Application Fee			CLOAC	PE1JB		2,973.00					
		Adjacent Collocation - 120V, Single Phase Standby Power Rate per AC Breaker Amp			CLOAC	PE1JL	5.81						
		Adjacent Collocation - 240V, Single Phase Standby Power Rate per AC Breaker Amp			CLOAC	PE1JM	11.64						
		Adjacent Collocation - 120V, Three Phase Standby Power Rate per AC Breaker Amp			CLOAC	PE1JN	17.45						
		Adjacent Collocation - 277V, Three Phase Standby Power Rate per AC Breaker Amp			CLOAC	PE1JO	40.30						
PHYSICAL COLLOCATION IN THE REMOTE SITE													
		Physical Collocation in the Remote Site - Application Fee			CLORS	PE1RA		580.20		312.76			
		Cabinet Space in the Remote Site per Bay/ Rack			CLORS	PE1RB	220.41						
		Physical Collocation in the Remote Site - Security Access - Key			CLORS	PE1RD		24.69					
		Physical Collocation in the Remote Site - Space Availability Report per Premises Requested			CLORS	PE1SR		218.49					
		Physical Collocation in the Remote Site - Remote Site CLLI Code Request, per CLLI Code Requested			CLORS	PE1RE		70.81					
		Remote Site DLEC Data (BRSDD), per Compact Disk, per CO			CLORS	PE1RR		234.15					

COLLOCATION - Tennessee

CATEGORY	RATE ELEMENTS	Interim	Zone	BCS	USOC	RATES ($)					Svc Order Submitted Elec per LSR	Svc Order Submitted Manually per LSR
						Rec	Nonrecurring		Nonrecurring Disconnect			
							First	Add'l	First	Add'l	SOMEC	SOMAN
	Physical Collocation - Security Escort for Basic Time - normally scheduled work, per half hour			CLORS	PE1BT		33.91	21.49				
	Physical Collocation - Security Escort for Overtime - outside of normally scheduled working hours on a scheduled work day, per half hour			CLORS	PE1OT		44.17	27.76				
	Physical Collocation - Security Escort for Premium Time - outside of scheduled work day, per half hour			CLORS	PE1PT		54.42	34.02				
PHYSICAL COLLOCATION IN THE REMOTE SITE - ADJACENT												
	Remote Site-Adjacent Collocation - AC Power, per breaker amp			CLORS	PE1RS	6.27						
	Remote Site-Adjacent Collocation - Real Estate, per square foot			CLORS	PE1RT	0.134						
	Remote Site-Adjacent Collocation-Application Fee			CLORS	PE1RU		755.62	755.62				
	NOTE: If Security Escort and/or Add'l Engineering Fees become necessary for remote site collocation, the Parties will negotiate appropriate rates.											
VIRTUAL REMOTE SITE COLLOCATION												
	Virtual Collocation in the Remote Site - Application Fee			VE1RS	VE1RB		580.20		312.76			
	Virtual Collocation in the Remote Site - Per Bay/Rack of Space			VE1RS	VE1RC	220.41						
	Virtual Collocation in the Remote Site - Space Availability Report per Premises requested			VE1RS	VE1RR		218.49					
	Virtual Collocation in the Remote Site - Remote Site CLLI Code Request, per CLLI Code Requested			VE1RS	VE1RL		70.81					
VIRTUAL COLLOCATION												
	Virtual Collocation - Application Fee			AMTFS	EAF		2,633.00					
	Virtual Collocation Administrative Only - Application Fee			AMTFS	VE1AF		743.25					
	Virtual Collocation - Cable Installation Cost, per cable			AMTFS	ESPCX		1,749.00					
	Virtual Collocation - Floor Space, per sq. ft.			AMTFS	ESPVX	3.91						
	Virtual Collocation - Power, per fused amp			AMTFS	ESPAX	6.79						
	Virtual Collocation - Cable Support Structure, per entrance cable			AMTFS	ESPSX	17.87						
	Virtual Collocation - 2-wire Cross Connects (loop)			UEANL,UEA,UDN,UDC,UAL,UHL,UCL,UEQ, UNCVX, UNCDX, UNCNX	UEAC2	0.57	11.62	9.90	10.38	8.66		
	Virtual Collocation - 4-wire Cross Connects (loop)			UEA,UHL,UCL,UDL, UAL, UDN, UNCVX, UNCDX	UEAC4	0.57	11.81	10.04	10.44	8.67		
	Virtual Collocation - 2-Fiber Cross Connects			UDL12, UDLO3, U1T48, U1T12, U1TO3, ULDO3, ULD12, ULD48, UDF	CNC2F	3.03	41.56	29.82	12.96	10.34		
	Virtual Collocation - 4-Fiber Cross Connects			UDL12, UDLO3, U1T48, U1T12, U1TO3, ULDO3, ULD12, ULD48, UDF	CNC4F	6.06	50.53	38.78	16.97	14.35		

COLLOCATION - Tennessee

CATEGORY		RATE ELEMENTS	Interim	Zone	BCS	USOC	RATES ($)					Svc Order Submitted Elec per LSR	Svc Order Submitted Manually per LSR
							Rec	Nonrecurring		Nonrecurring Disconnect			
								First	Add'l	First	Add'l	SOMEC	SOMAN
		Virtual collocation - Special Access & UNE, cross-connect per DS1			USL, ULR, UXTD1, UNC1X, ULDD1, U1TD1, USLEL, UNLD1, UEPEX, UEPDX	CNC1X	1.32	32.22	17.76	10.46	8.75		
		Virtual collocation - Special Acess & UNE, cross-connect per DS3			USL,UE3, U1TD3, UXTS1, UXTD3, UNC3X, UNCSX, ULDD3, U1TS1, ULDS1, UDLSX, UNLD3	CND3X	12.32	29.97	16.30	12.03	8.99		
		Virtual Collocation - Co-Carrier Cross Connect/Direct Connect, Application Fee, per application			AMTFS	VE1CA		585.09					
		Virtual Collocation - Co-Carrier Cross Connects/Direct Connect - Fiber Cable Support Structure, per linear foot, per cable			AMTFS	VE1CB	0.0013						
		Virtual Collocation - Co-Carrier Cross Connects/Direct Connect - Copper/Coax Cable Support Structure, per linear ft., per cable			AMTFS	VE1CD	0.0019						
		Virtual Collocation Cable Records - per request			AMTFS	VE1BA		1,711.00					
		Virtual Collocation Cable Records - VG/DS0 Cable, per cable record			AMTFS	VE1BB		925.06					
		Virtual Collocation Cable Records - VG/DS0 Cable, per each 100 pair			AMTFS	VE1BC		18.05					
		Virtual Collocation Cable Records - DS1, per T1TIE			AMTFS	VE1BD		8.45					
		Virtual Collocation Cable Records - DS3, per T3TIE			AMTFS	VE1BE		29.57					
		Virtual Collocation Cable Records - Fiber Cable, per 99 fiber records			AMTFS	VE1BF		279.42					
		Virtual collocation - Security Escort - Basic, per half hour			AMTFS	SPTBX		33.15	20.44				
		Virtual collocation - Security Escort - Overtime, per half hour			AMTFS	SPTOX		41.50	25.61				
		Virtual collocation - Security Escort - Premium, per half hour			AMTFS	SPTPX		49.86	30.79				
		Virtual collocation - Maintenance in CO - Basic, per half hour			AMTFS	CTRLX		30.64					
		Virtual collocation - Maintenance in CO - Overtime, per half hour			AMTFS	SPTOM		35.77					
		Virtual collocation - Maintenance in CO - Premium per half hour			AMTFS	SPTPM		40.90					
		Virtual Collocation - Request Resend of CFA Information, per CLLI			AMTFS	VE1QR		77.67					
VIRTUAL COLLOCATION													
		Virtual Collocation - 2-wire Cross Connect, Exchange Port 2-Wire Analog - Res			UEPSR	VE1R2	0.57	11.62	9.90	10.38	8.66		
		Virtual Collocation 2-Wire Cross Connect, Exchange Port 2-Wire Line Side PBX Trunk - Bus			UEPSP	VE1R2	0.57	11.62	9.90	10.38	8.66		
		Virtual Collocation 2-Wire Cross Connect, Exchange Port 2-Wire Voice Grade PBX Trunk - Res			UEPSE	VE1R2	0.57	11.62	9.90	10.38	8.66		
		Virtual Collocation 2-Wire Cross Connect, Exchange Port 2-Wire Analog Bus			UEPSB	VE1R2	0.57	11.62	9.90	10.38	8.66		

COLLOCATION - Tennessee														
CATEGORY		RATE ELEMENTS	Interim	Zone	BCS	USOC	RATES ($)						Svc Order Submitted Elec per LSR	Svc Order Submitted Manually per LSR
							Rec	Nonrecurring		Nonrecurring Disconnect				
								First	Add'l	First	Add'l		SOMEC	SOMAN
		Virtual Collocation 2-Wire Cross Connect, Exchnage Port 2-Wire ISDN			UEPSX	VE1R2	0.57	11.62	9.90	10.38	8.66			
		Virtual Collocation 4-Wire Cross Connect, Exchange Port 4-Wire ISDN DS1			UEPEX	VE1R4	0.57	11.81	10.04	10.44	8.67			
		Note: Rates displaying an "I" in the Interim column are interim as a result of a Commission order.												

Attachment 5

Access to Numbers and Number Portability

TABLE OF CONTENTS

1. Non-discriminatory Access to Telephone Numbers 3

2. LNP 4

3. OSS RATES 5

ACCESS TO NUMBERS AND NUMBER PORTABILITY

1. Non-discriminatory Access to Telephone Numbers

1.1 During the term of this Agreement, where KMC III is utilizing its own switch, KMC III shall contact the North American Numbering Plan Administrator (NANPA), or, where applicable, the relevant Number Pool Administrator for the assignment of numbering resources.

1.2 Where BellSouth provides local switching or resold services to KMC III, BellSouth will provide KMC III with online access to available telephone numbers as defined by applicable FCC rules and regulations on a first come first served basis. KMC III acknowledges that such access to numbers shall be in accordance with the appropriate FCC rules and regulations. KMC III may designate up to a forecasted six (6) months supply of available numbers as intermediate (an available number provided to KMC III) telephone numbers per rate center if the following conditions are met:

1.2.1 KMC III must: (1) indicate that all of the intermediate numbers currently held by KMC III in each rate center where KMC III will be requesting intermediate telephone numbers have six (6) or less months to exhaust; (2) supply projected monthly telephone number demand on a rate center basis for the coming twelve (12) months for each rate center where KMC III will be requesting intermediate telephone numbers; and, (3) demonstrate that the utilization level on current intermediate numbers held by KMC III in the rate center where KMC III is requesting telephone numbers has reached at least seventy percent (70%). The above information will be provided by KMC III by submitting to BellSouth a fully completed "CO Code Assignments Months To Exhaust Certification Worksheet – TN Level" ("MTE Worksheet"), Appendix B to the Central Office Code (NXX) Assignments Guidelines, INC 95-0407-008 for each rate center where KMC III will be requesting intermediate telephone numbers. The utilization level is calculated by dividing all intermediate numbers currently assigned by KMC III to customers by the total number of intermediate numbers held by KMC III in the rate center and multiplying the result by one hundred (100). After June 30, 2004, rate center utilization level must be at seventy-five percent (75%) (Part F of the MTE Worksheet).

1.2.2 If fulfilling KMC III's request for intermediate numbers results in BellSouth having to submit a request for additional telephone numbers to a national numbering administrator (either NANPA CO Code Administration or NeuStar Pooling Administration or their successors), BellSouth will submit the required numbering request to the national numbering administrator to satisfy KMC III's request for intermediate numbers. BellSouth will also pursue all appropriate steps (including submitting a safety valve request (petition) to the appropriate Commission if the

numbering request is denied by the national administrator) to satisfy KMC III's request for intermediate numbers. In these cases, BellSouth is not obligated to fulfill the request by KMC III for intermediate numbers unless, and until, BellSouth's request for additional numbering resources is granted.

1.2.3 KMC III agrees to supply supporting information for any numbering request and/or safety valve request that BellSouth files pursuant to Section 1.2.2 above.

1.3 KMC III acknowledges that there may be instances where there is an industry shortage of available telephone numbers in a NPA. These instances occur where a jeopardy status has been declared by NANPA and the industry has determined that limiting the assignment of new numbers is the appropriate method to employ until the jeopardy can be alleviated. In such NPA jeopardy situations where assignment of new numbers is restricted as per the jeopardy guidelines developed by the industry, BellSouth may request that KMC III cancel all or a portion of its unassigned intermediate numbers. KMC III consent to BellSouth's request shall not be unreasonably withheld.

2. LNP

2.1 The Parties will offer Number Portability in accordance with rules, regulations and guidelines adopted by the Commission, the FCC and industry fora.

2.2 Customer Line Charge. Where KMC III subscribes to BellSouth's local switching, BellSouth shall bill and KMC III shall pay the customer line charge associated with implementing LNP as set forth in BellSouth's FCC Tariff No. 1. This charge is not subject to the resale discount set forth in Attachment 1 of this Agreement.

2.3 Service Management System (SMS) Administration. The Parties will work cooperatively with other local service providers to establish and maintain contracts for the LNP SMS.

2.4 Network Architecture. The parties agree to adhere to applicable FCC Rules and Orders governing LNP network architecture.

2.5 Signaling. In connection with LNP, each Party agrees to use Signaling System Seven (SS7) signaling in accordance with applicable FCC Rules and Orders.

2.6 N-1 Query. The parties agree to adhere to applicable FCC Rules and Orders governing LNP N-1 queries.

2.7 Porting of Reserved Numbers and Suspended Lines. Customers of each Party may port numbers, via LNP, that are in a denied state or that are on suspend status. In addition, customers of each Party may port reserved numbers that the customer has paid to reserve. Portable reserved numbers are identified on the Customer Service Record (CSR). In anticipation of porting from one Party to the other Party, a Party's subscriber may reserve additional telephone numbers and include

them with the numbers that are subsequently ported to the other Party. It is not necessary to restore a denied number before it is ported.

2.8 Splitting of Number Groups. If blocks of subscriber numbers (including, but not limited to, Direct Inward Dial (DID) numbers and MultiServ groups) are split in connection with an LNP request, the Parties shall permit such splitting. BellSouth and KMC III shall offer number portability to customers for any portion of an existing block of DID numbers without being required to port the entire block of numbers. BellSouth and KMC III shall permit end-users who port a portion of DID numbers to retain DID service on the remaining portion of numbers. If a Party requests porting a range of DID numbers smaller than a whole block, that Party shall pay the applicable charges for doing so as set forth in Attachment 2 of this Agreement. In the event a rate is not available then the Parties shall negotiate a rate for such services.

2.9 The Parties will set LRN unconditional or ten (10) digit triggers where applicable. Where triggers are set, the porting Party will remove the ported number at the same time the trigger is removed.

2.10 A trigger order is a service order issued in advance of the porting of a number. A trigger order 1) initiates call queries to the Advanced Intelligent Network (AIN) SS7 network in advance of the number being ported, and 2) provides for the new service provider to be in control of when a number ports.

2.11 Where triggers are not set, the Parties shall coordinate the porting of the number between service providers so as to minimize service interruptions to the customer.

2.12 BellSouth and KMC III will work cooperatively to implement changes to LNP process flows ordered by the FCC or as recommended by standard industry forums addressing LNP.

3. OSS RATES

3.1 The terms, conditions and rates for OSS are as set forth in Attachments 1 and 2.

Attachment 6

Pre-Ordering, Ordering, Provisioning, Maintenance and Repair

TABLE OF CONTENTS

1. QUALITY OF PRE-ORDERING, ORDERING, PROVISIONING, MAINTENANCE AND REPAIR.....3

2. ACCESS TO OPERATIONS SUPPORT SYSTEMS.....4

3. MISCELLANEOUS.....21

PRE-ORDERING, ORDERING, PROVISIONING, MAINTENANCE AND REPAIR

1. Quality Of Pre-Ordering, Ordering, Provisioning, Maintenance and Repair

1.1 Nondiscriminatory Access. BellSouth shall provide to KMC III access to its Operations Support Systems (OSS) and the necessary information contained therein in order that KMC III can perform the functions of pre-ordering, ordering, provisioning, maintenance-and repair, and billing in accordance with FCC and Commission rules and orders. Detailed guidelines for ordering and pre-ordering are set forth in the Local Ordering Handbook (LOH) on BellSouth's Interconnection Services Web site, http://interconnection.bellsouth.com/guides/html/leo.html, for maintenance and repair at http:/www.interconnection.bellsouth.com/guides/html/other_guides.html and for billing at http:/www.interconnection.bellsouth.com/guides/html/billing.html. Except where otherwise required by Commission order, where practicable, BellSouth will notify KMC III of changes to ordering, preordering, provisioning, maintenance and repair, and billing interfaces and business rules via the appropriate BellSouth Web site thirty (30) days prior to such changes. In addition, BellSouth will use its best efforts, upon KMC III's request to BellSouth's Interconnection Services (ICS) Web site group at wmag@bellsouth.com, to provide such notices via e-mail to the address specified by KMC III.

1.2 Regular Working Hours/Overtime. For purposes of this Agreement, BellSouth's regular working hours for provisioning are defined as follows:

Monday – Friday –	8:00 a.m. – 5:00 p.m.	(Excluding Holidays) (Resale/UNE non-coordinated, coordinated orders and order coordinated-time specific)
Saturday -	8:00 a.m. – 5:00 p.m.	(Excluding Holidays) (Resale/UNE non-coordinated orders)

1.2.1 The above hours represent the hours, either Eastern or Central Time, of the location where the customer is located and the physical work associated with providing service to that customer is being performed.

1.2.2 To the extent KMC III requests provisioning of service to be performed outside BellSouth's regular working hours, or the work so requested requires BellSouth's technicians or Project Manager to work outside of regular working hours, overtime billing charges pursuant to Section A2.3.15 of BellSouth's General Subscriber Services Tariff (GSST) for the applicable state shall apply. Notwithstanding the foregoing, if such work is performed outside of regular

working hours by a BellSouth technician or Project Manager during his or her scheduled shift and BellSouth does not incur any overtime charges in performing the work on behalf of KMC III, BellSouth will not assess KMC III additional charges beyond the rates and charges specified in this Agreement.

1.3 KMC III and BellSouth will utilize standard industry formats and data elements developed by the Alliance for Telecommunications Industry Solutions (ATIS), including without limitation to the Ordering and Billing Forum (OBF) (ATIS and its associated committees). Where standard industry formats and data elements are not developed by ATIS and its associated committees, KMC III and BellSouth may cooperatively work to pursue their development through these industry standards organizations. For non-industry standard changes that will affect systems within the scope of the Change Control Process (CCP) (changes that affect external users of BellSouth's OSS interfaces and associated manual processes and documentation) to the extent KMC III elects to address such changes KMC III will use the CCP located at http://www.interconnection.bellsouth.com/markets/lec/ccp_live/index.html/main/clec.html to address the specific requirements. When an ATIS and its associated committees standard or format is subsequently adopted, the Parties will utilize the CCP located at http://www.interconnection.bellsouth.com/markets/lec/ccp_live/index.html/main/clec.html to determine how to transition the implementation of the ATIS and its associated committees standard or format.

2. Access to Operations Support Systems

2.1 Interfaces. BellSouth shall provide KMC III access to OSS functions for pre-ordering, ordering, provisioning, maintenance and repair, and billing. BellSouth shall provide access to the OSS through manual and/or electronic interfaces as described in this Attachment. It is the sole responsibility of KMC III to obtain the technical capability to access and utilize BellSouth's OSS interfaces. Specifications for KMC III's access and use of BellSouth's electronic interfaces are set forth at www.interconnection.bellsouth.com/guides/html/lens_tafi.html (Programming Interfaces) and are incorporated herein by reference.

2.2 For each OSS system training class offered by BellSouth, BellSouth shall make available one (1) free seat per year. Job aids for updates to such OSS training information are available to KMC III on the BellSouth Interconnection Services Web site.

2.2.1 Prior to initial live access to interface functionality and subject to mutual agreement, the Parties shall conduct cooperative testing which will allow for the testing of the systems, interfaces, and processes for the OSS functions as defined at the BellSouth Interconnection Services Web site for testing, http://interconnection.bellsouth.com/clectest/index.html, and in CCP Section 10, http://interconnection.bellsouth.com/markets/lec/ccp_live/docs/bccp/ccp_bccp_guide.pdf.

2.2.2 Each BellSouth interface shall be available, except for maintenance, emergency repair and scheduled downtime necessary for situations such as systems upgrades and applications releases as indicated in the OSS System Hours of Availability at www.interconnection.bellsouth.com/oss/oss_hour.html, except as modified through Carrier Notification Letters, and is incorporated herein by reference twenty-four (24) hours a day, seven (7) days a week.

2.2.2.1 BellSouth will provide a minimum of fifteen (15) days advanced notice of any scheduled maintenance and scheduled downtime outside the regularly scheduled system downtime. Maintenance shall normally be scheduled when systems experience minimum usage. Downtime for emergency repair (Type 1 System Outage) will be given within fifteen (15) minutes of when it is known via email and web posting. Non-scheduled maintenance is defined in BellSouth's Operational Understanding located at BellSouth's Interconnection Services Web site: http://www.interconnection.bellsouth.com/guides/other_guides/html/gopeu001/index.htm as additional activity by BellSouth during a normal repair/alarm process that would require immediate maintenance action to prevent further service degradation or service interruption. This then would not lend itself to a scheduled maintenance interval or customer notification and BellSouth would employ the same process as BellSouth would use for its customers.

2.3 Single Point of Contact/Blanket Letter of Authorization (LOA). KMC III will be the single point of contact with BellSouth for ordering activity for network elements and other services used by KMC III to provide services to its customers, except that BellSouth may accept a request directly from another CLEC, or BellSouth, acting with authorization of the affected customers. KMC III and BellSouth shall each execute a blanket LOA with respect to customer requests so that prior proof of customer authorization will not be necessary with every request. The Parties shall each be entitled to adopt their own internal processes for verification of customer authorization for requests, provided, however, that such processes shall comply with applicable FCC and Commission rules and orders.

2.4 Batch Transmission. Upon request, BellSouth shall provide KMC III with pre-order information in batch transmission to the extent BellSouth makes it available or provides it to any other Telecommunications Carrier on the same terms and conditions and at the same rates.

2.5 Pre-Ordering. In accordance with FCC and Commission rules and orders, BellSouth will provide electronic access to its OSS and the information contained therein in order that KMC III can perform the following pre-ordering functions: service address validation, telephone number selection, service and feature availability, due date information, customer record information and loop makeup information. Customer record information includes any and all customer specific information which will be provided as set forth in BellSouth's Customer Service Record (CSR) Job Aid and Parsed Customer Service (PCSR) Job Aid, Issue 2C-October, 2002, which is accessible via the Internet at the following Bellsouth Interconnection Services Web site:

http://www.interconnection.bellsouth.com/guides/bpobr/html/gcsrj001/index.htm. Access to customer record information will be provided through the CLEC OSS interfaces.

2.5.1 BellSouth shall provide electronic access to current and accurate CSR information in accordance with the BellSouth LOH which is accessible via the Internet at Bellsouth's Interconnection Services Web site: http://interconnection.bellsouth.com/guides/html/leo.html. The response interval and average response time will be as required by SQM OSS.

2.5.2 Parsing. BellSouth shall provide parsed CSR information as set forth in BellSouth's CSR Job Aid and PCSR Job Aid, Issue 2C-October, 2002 which is accessible at BellSouth's Interconnection Services Web site: http://www.interconnection.bellsouth.com/guides/bpobr/html/gcsrj001/index.htm.

2.5.3 BellSouth shall provide KMC III with nondiscriminatory access to the loop qualification information that is available to BellSouth, so that KMC III can make an independent judgment about whether the loop is capable of supporting the advanced services equipment that KMC III intends to install. Loop qualification information is defined as information, such as the composition of the loop material, including but not limited to: fiber optics or copper; the existence, location and type of any electronic or other equipment on the loop, including but not limited to, digital loop carrier or other remote concentration devices, feeder/distribution interfaces, bridge taps, load coils, pair-gain devices, the loop length, including the length and location of each type of transmission media; the wire gauge(s) of the loop; and the electrical parameters of the loop, which may determine the suitability of the loop for various technologies.

2.5.4 Subject to the same exclusions that apply to BellSouth's delivery of CSRs, KMC III shall use commercially reasonable efforts to provide to BellSouth access to CSRs within forty-eight (48) hours of a valid request, exclusive of Saturdays, Sundays and Holidays.

2.5.5 The Parties agree not to view, copy, or otherwise obtain access to the CSR information of any customer without that customer's permission. The Parties will obtain access to CSR information only in strict compliance with applicable laws, rules, or regulations of the state in which the service is provided.

2.5.5.1 LOA Request. Either Party may request that the other provide a copy of an appropriate LOA. The Parties shall use best efforts to provide such a copy within seven (7) business days.

2.5.5.2 Notice of Noncompliance. If, after receipt of a requested LOA, the requesting Party determines that the other Party has accessed CSR information without having obtained the proper customer authorization, or, if no LOA is provided by the seventh (7th) business day after such request has been made, the requesting

Party will send written notice by email to the other Party specifying the alleged noncompliance.

2.5.5.3 Disputes over Alleged Noncompliance. In its written notice to the other Party, the alleging Party will state that additional applications for service may be refused, that any pending orders for service may not be completed, and/or that access to ordering systems may be suspended if such use is not corrected or ceased by the fifth (5th) day following the date of the notice. In addition, the alleging Party may, at the same time, provide written notice by email to the person designated by the other Party to receive notices of noncompliance that the alleging Party may terminate the provision of access to ordering systems to the other Party and may discontinue the provisioning of existing services if such use is not corrected or ceased by the tenth (10th) day following the date of the initial notice**.** If the other Party disagrees with the alleging Party's allegations of unauthorized use, the alleging Party shall proceed pursuant to the dispute resolution provisions set forth in the General Terms and Conditions. All such information obtained through the process set forth in this Section 2.5.5 shall be deemed Information covered by the Proprietary and Confidential Information Section in the General Terms and Conditions of this Agreement.

2.6 Service Ordering and Provisioning. BellSouth will provide the capability to place orders electronically and/or manually. KMC III can determine if orders can be placed electronically for a certain product by reviewing the LOH found on BellSouth's Interconnection Services Web site located at http://interconnection.bellsouth.com/guides/html/leo.html. Electronic ordering will be made available via a single interface for ordering and pre-ordering or the integration of a pre-ordering and ordering interface. KMC III may integrate the EDI interface with the EDI pre-ordering interface or the TAG ordering interface with the TAG pre-ordering interface. In addition, BellSouth will provide integrated pre-ordering and ordering capability through the LENS interface for non-complex and certain complex resale service requests and certain network element requests. Facsimile and e-mail shall not be considered electronic interfaces. If at any time such interfaces are not available to make placement of an electronic local service request (LSR) possible, KMC III shall use the manual LSR process for the ordering of all services and network elements and any combination thereof. Such manual LSRs must be submitted via facsimile except when pre-arranged with BellSouth to mail manual LSRs of over one hundred (100) pages. In the case of outages of BellSouth's OSS interfaces, KMC III will be assessed the lower electronically submitted OSS rate if KMC III must submit LSRs manually during periods of systems outages by complying with the rules specified in the LOH located at BellSouth's Interconnection Services Web site**:** http://interconnection.bellsouth.com/guides/html/leo.html. Additionally, KMC III will be assessed the lower electronically submitted OSS rate if a product or service that is electronically orderable by BellSouth's retail unit is not orderable electronically by a CLEC. BellSouth will make available the CLEC OSS ordering interface for the purpose of exchanging order information, including CLEC Service Order Tracking System (CSOTS) order status and completion notification, for

non-complex and certain resale requests, certain network elements and network element combinations.

2.6.1 Interconnection trunking will be ordered via an access service request (ASR) and shall be billed in accordance with Attachment 3.

2.6.2 KMC III may submit, and BellSouth will accept, orders for services and network elements as per the reasonable and nondiscriminatory requirements contained in the BellSouth LOH located at BellSouth's Interconnection Services Web Site: http://interconnection.bellsouth.com/guides/html/leo.html. Notice of changes or additions to ordering procedures resulting from new Services and Elements shall be provided to KMC III through BellSouth's Carrier Notifications which can be accessed at BellSouth's Interconnection Services Web site: http://www.interconnection.bellsouth.com/notifications.

2.6.3 Upon receipt of an order for a conversion, from a BellSouth customer to a CLEC with either UNE or Resale services, BellSouth will: (i) process disconnect and reconnect orders, if necessary, to provision the service which shall be due-dated using the reasonable and nondiscriminatory interval guidelines set forth in Section 8 of the LOH which is accessible via the Internet at the following Web site: http://interconnection.bellsouth.com/guides/html/leo.html, (ii) where applicable reuse the service facility for retail, resale service, or individual loop(s) and/or port(s) at the same location, and (iii) notify KMC III subsequent to the order being completed.

2.6.4 KMC III will specify on each order its Desired Due Date (DDD) for completion of that particular order. BellSouth shall assign a due date which shall be the later of the date for the interval specified in Section 8 of the LOH, located at http://interconnection.bellsouth.com/guides/html/leo.html, or KMC III's DDD. BellSouth shall not complete the provisioning for that order prior to due date unless early turn-up is needed for testing purposes or KMC III otherwise consents to such early turn-up and order completion. BellSouth will make best effort to meet the due date for service requests. BellSouth will notify KMC III if the due date cannot be met and shall assign the earliest due date possible. When the DDD is less than the standard interval, KMC III shall use the expedite request field on the order. If KMC III requests that an order be expedited, BellSouth shall notify KMC III of the status of the order and the due date which shall be (1) for a non-designed order, (a) the expedite date, (b) the earliest date it can be worked after the expedite date or (c) the standard date, or (2) for an UNE order, (a) the expedite date or (b) the standard date as the DD, with the return of the Firm Order Confirmation (FOC) within the interval required by SQM O-9. Service date advancement charges shall be as set forth in Exhibit A of Attachment 2 of this Agreement.

2.6.5 <u>Service Date Advancement Charges (Expedites).</u> For Service Date Advancement requests by KMC III, Service Date Advancement charges will apply for intervals less than the standard interval as outlined in Section 8 of the LOH, located at

http://interconnection.bellsouth.com/guides/html/leo.html. The charges shall be as set forth in Exhibit A of Attachment 2 of this Agreement and will apply only where Service Date Advancement has been specifically requested by the requesting Party, and the element or service provided by the other Party meets all technical specifications and is provisioned to meet those technical specifications. If KMC III accepts service on the plant test date (PTD) normal recurring charges will apply from that date but Service Date Advancement charges will only apply if KMC III previously requested the order to be expedited and the expedited DD is the same as the original PTD.

2.6.6 Missed Due Dates. In the case of a missed due date, the Parties shall work cooperatively to complete the order as soon as possible. In the event that a missed due date is one associated with a Service Date Advancement request, Service Date Advancement charges will not apply if BellSouth fails to complete the order prior to the standard interval or a negotiated interval. When the missed due date is the fault of KMC III or its customer, subsequent order processing fees will apply. When it is a BellSouth error, subsequent order processing fees will not apply.

2.6.7 Cancellation Charges. If either Party cancels a request for network elements or other services, any costs incurred by the provisioning Party in conjunction with the provisioning of that request will be recovered in accordance with BellSouth's Private Line Tariff Section B2.4.14 or BellSouth's FCC No. 1 Tariff, Section 5.4, as applicable. Notwithstanding the foregoing, if KMC III places an LSR based upon BellSouth's loop makeup information, and such information is inaccurate resulting in the inability of BellSouth to provision the network elements or services requested and another compatible facility cannot be found with the transmission characteristics of the network elements or services originally requested, cancellation charges described in this Section shall not apply. Where KMC III places a single LSR for multiple network elements or services based upon loop makeup information, and information as to some, but not all, of the network elements or services is inaccurate, if BellSouth cannot provision the network elements or services that were the subject of the inaccurate loop makeup information, KMC III may cancel its request for those network elements or services without incurring cancellation charges as described in this Section. In such instance, should KMC III elect to cancel the entire LSR, cancellation charges as described in this Section shall apply to those elements and services that were not the subject of inaccurate loop makeup. Notwithstanding the foregoing, if KMC III places a single LSR for an unbundled network combination, as described in Section 5 of Attachment 2 of this Agreement, based upon BellSouth's loop makeup information, and such information is inaccurate resulting in the inability of BellSouth to provision the network elements requested in accordance with the transmission characteristics of the network elements requested, cancellation charges described in this Section shall not apply.

2.6.8 Resale Service Orders. Resale service orders shall be available per the BellSouth LOH which can be found at BellSouth's Interconnection Services Web site: http://interconnection.bellsouth.com/guides/html/leo.html.

2.6.8.1 BellSouth shall not require a disconnect order from a customer, KMC III, or another CLEC in order to process a KMC III order for a Resale service available under Attachment 1 to this Agreement.

2.6.9 FOCs, Completion Notices, Jeopardies and DLRs. BellSouth shall provide to KMC III electronic and manual interfaces for transmitting orders and receiving FOCs, Completion Notices (for electronically submitted orders only, for manual orders completions can be viewed in CSOTS), Jeopardies, Design Layout Records, Rejections and, as available, other provisioning data and information. BellSouth shall provide KMC III with a FOC for each Resale and UNE order. The information provided on the FOC will be as described in the Product Information Packages and BellSouth LOH which can be found at BellSouth's Interconnection Services Web site: http://interconnection.bellsouth.com/guides/html/leo.html.

2.6.9.1 BellSouth shall provide to KMC III a FOC within time periods as specified by SQM O-9. For a LSR in the states of Alabama, Georgia, Kentucky, Louisiana, Mississippi, and South Carolina, after the FOC is sent the order will be sent for a review of available facilities. If a facility jeopardy is found it is posted on the Pending Facilities (PF) Report found on the PMAP web site located at https://pmap.bellsouth.com/default.aspx. The order is then sent to the Service Advocacy Center/Outside Plant Engineering group to seek out alternative facilities and if none are found to create a work order to provide relief. Once alternative facilities are found or facilities are cleared/installed the order is cleared for completion. The process is the same for the LSRs submitted in the states of Florida, North Carolina and Tennessee where the available facilities are reviewed prior to returning the FOC.

2.6.10 Rejections/Errors. BellSouth shall reject and return to KMC III any local service request that BellSouth cannot provision due to technical reasons or due to missing, inaccurate or illegible information. When an LSR is rejected, BellSouth shall, in its reject notification, specifically identify and describe, using specified error codes and additional written explanation where necessary, the reasons for which the LSR was rejected. BellSouth will always use best efforts to identify all errors and any need for clarification before rejecting the LSR to KMC III, and to avoid serial requests for LSR correction or clarification. BellSouth will not be able to check for potential dependency conditions created by new data on a clarified request that might cause a serial error when the new data is inputted.

2.6.10.1 BellSouth will identify errors in accordance with BellSouth's LSR error messages documentation, which contains error codes applicable to a LSR and a description of the errors such codes identify. BellSouth will make available such documentation on BellSouth's Interconnection Services Web site, http://www.interconnection.bellsouth.com/guides/html/lsr.html. BellSouth will work cooperatively with KMC III as reasonably necessary to assist KMC III in identifying and understanding LSR errors and associated error codes. Supplemental written explanation of the reasons for the reject will be included, as

necessary to pinpoint the error or need for clarification and to prevent the need for serial correction and/or clarification.

2.6.10.2 If a LSR is rejected more than once for error or clarification, no additional supplemental order charges shall apply.

2.6.11 Due dates cannot be considered confirmed until a complete and accurate service request has been entered into BellSouth's service request processing systems. A due date may be adjusted for an order that has been rejected for error or clarification. Serial requests for correction and/or clarification may also trigger a new due date. When a due date is impacted by an invalid clarification by BellSouth, at KMC III's request, BellSouth will make a best effort to honor the due date measured from the original submission of the complete and accurate service request or give the next available date.

2.6.12 Service Request Changes (Supplemental Service Requests). If an installation or other KMC III requested work requires a change from the original KMC III service request in any manner while the BellSouth technician is onsite, BellSouth shall notify the appropriate KMC III ordering center designated in advance of performing the installation or other work to obtain authorization. BellSouth shall then provide KMC III an estimate of additional labor hours or materials. After all installation or other work is completed, BellSouth shall immediately notify the KMC III ordering center that approved the supplemental service request(s) of the actual labor hours or materials used.

2.6.12.1 If provisioning of a service request can only be partially completed due to unavailable facilities, BellSouth shall notify KMC III in accordance with the pending facilities procedures set forth in Section 2.6.14 below.

2.6.12.2 If KMC III's customer requests a service change at the time of installation or other service visit performed by BellSouth technicians, BellSouth shall immediately notify KMC III at the telephone number on the service order of that request. The BellSouth technician should notify KMC III in the presence of the KMC III customer and provide an estimate of additional labor hours or materials needed so that KMC III can negotiate authority to install the requested service directly with that customer and the technician and revise appropriate ordering documents as necessary. At no time should the BellSouth representative perform any work not ordered by KMC III, even at the customer's request, without approval from the KMC III ordering center. After all installation or other work is completed, BellSouth shall immediately notify KMC III of the actual labor hours or materials used to the KMC III ordering center that authorized the supplemental service request(s).

2.6.13 Pending Facility Situations. BellSouth shall provide to KMC III notification of any known facility jeopardy situations when they occur via the password protected PF Report on the PMAP web site located at http://pmap.bellsouth.com/default.aspx and via CSOTS. When BellSouth is able to provide a new committed due date,

BellSouth shall provide KMC III a FOC containing the new due date if the date is later than the original due date on a nondiscriminatory basis with itself and other CLECs.

2.6.14 Status. BellSouth shall provision Resale Services and UNEs as prescribed in KMC III's service order requests. Access to FOC status on electronically submitted orders and other status states for electronically and manually submitted orders shall be provided via CSOTS located at https//csots.bellsouth.com. Access to FOC status on manually submitted service order requests shall be provided on BellSouth's PMAP Internet web site at http://pmap.bellsouth.com/default.aspx.

2.6.15 Lack of Facilities Notice. BellSouth shall provide notice of a lack of facilities availability in accordance with SQM P-2.

2.6.16 Orders placed in hold or pending status by KMC III will be held for a maximum of thirty (30) days from the date the order is placed on hold. After such time, KMC III shall be required to submit a new service request. Incorrect or invalid requests returned to KMC III for correction or clarification will be held for thirty (30) days. If KMC III does not return a corrected request within thirty (30) days, BellSouth will cancel the request.

2.6.17 Testing. BellSouth shall perform all pre-testing necessary to ensure the services ordered meet the specifications outlined in the technical reference for the service being ordered. Such tests will include all of the tests that BellSouth would perform for the turnup of its own service. Upon request, BellSouth shall provide KMC III with the results from all tests when available.

2.6.18 KMC III and BellSouth will perform cooperative testing, if requested by KMC III, to test Services and Elements purchased by KMC III where BellSouth performs cooperative testing on like services for it's retail entity. At a minimum, cooperative testing performed will include margin, attenuation and insertion loss tests. In situations where a requested test is not normally performed by BellSouth to provision a circuit, Additional Cooperative Acceptance Testing (ACAT) charges will apply in accordance with Section 13.3.5 of BellSouth's FCC No.1 Tariff. In situations where a requested test is not normally performed by BellSouth to address a trouble ticket on a circuit, ACAT charges will apply in accordance with Section 13.3.5 of BellSouth's FCC No. 1 Tariff.

2.6.19 Both Parties shall work cooperatively if required to isolate and clear troubles that cannot be isolated to a particular Party's network.

2.6.20 For maintenance issues, BellSouth will perform testing with the issuance of a trouble report identifying a possible trouble condition in BellSouth's network. BellSouth will perform intrusive testing during the periods authorized by KMC III on the trouble report. Where feasible, BellSouth shall perform electronic loop tests at KMC III's request. BellSouth shall provide KMC III with the results from all tests when available. In situations where a requested test is not normally

performed by BellSouth to provision a circuit, ACAT charges will apply. If the trouble is found in BellSouth's network through the performance of the ACAT testing no ACAT charges will be charged.

2.6.21 Tag and Locate. BellSouth must properly and physically tag and locate all circuits, if ordered by KMC III, regardless of provisioning method employed by BellSouth. In cases where BellSouth would not otherwise dispatch to provision a circuit, and KMC III requests Tagging, KMC III will incur the Loop Tagging charges set forth in Exhibit A of Attachment 2 of this Agreement.

2.6.22 Suspend/Restore Orders. Upon KMC III's request through a Suspend/Restore Order, BellSouth shall suspend or restore the functionality of any Services and Elements provided pursuant to this Agreement.

2.6.23 Unless otherwise ordered by KMC III, when KMC III orders services and network elements pursuant to this Agreement, all preassigned trunk or telephone numbers currently associated with those services and network elements shall be retained without loss of switched based features where such features exist. KMC III shall be responsible for ensuring that associated functions (e.g., entries to databases and 911/E911 capability) are properly ordered or retained on the service request.

2.6.24 Completion Notification. Upon completion of a service request submitted electronically, and once BellSouth's systems determine that the service order is completed, BellSouth shall submit to KMC III, via the same electronic interface used to submit the LSR, a completion notification that complies with the OBF/LSOG business rules and ATIS models, as adopted by the CCP. Completion information for LSRs submitted both manually and electronically is available via BellSouth's web-based system known as CSOTS.

2.6.25 Subject to the same exclusions that apply to BellSouth's delivery of a FOC,KMC III shall use commercially reasonable efforts to return a FOC to BellSouth, for purposes of porting a number for noncomplex orders, within forty-eight (48) hours exclusive of Saturdays, Sundays and Holidays, after KMC III's receipt from BellSouth of a valid LSR**.**

2.6.26 Subject to the same exclusions that apply to BellSouth's delivery of a Reject Response, KMC III shall use commercially reasonable efforts to provide a Reject Response to BellSouth, for noncomplex orders, within forty-eight (48) hours, exclusive of Saturdays, Sundays and Holidays, after BellSouth's submission of an LSR which is incomplete or incorrectly formatted.

2.7 Maintenance and Repair. KMC III may report and monitor service troubles and obtain repair services from BellSouth via electronic interfaces. BellSouth provides several options for electronic trouble reporting and monitoring, including, but not limited to CPSS-TA and the following interfaces. For exchange services, BellSouth offers KMC III nondiscriminatory access to the Trouble Analysis Facilitation Interface (TAFI). In addition, BellSouth offers an industry standard,

machine-to-machine Electronic Communications Trouble Administration (ECTA) Gateway interface. For designed services, BellSouth provides nondiscriminatory trouble reporting via the ECTA Gateway. BellSouth provides customer_short_name>> an estimated time to repair, as appropriate, on trouble reports. Requests for trouble repair are billed in accordance with the provisions of this Agreement. BellSouth service technicians provide to KMC III and its customers repair service that is nondiscriminatory in relation to that provided to BellSouth and its customers and shall receive response time priority that is at least equal to that of BellSouth and its similarly situated customers. BellSouth will employ the Telecommunications Service Priority (TSP) System in its restoration of National Security and Emergency Preparedness (NS/EP) telecommunications services.

2.7.1 BellSouth and KMC III agree to adhere to BellSouth's Operational Understanding. The Operational Understanding may be assessed via the BellSouth's Interconnection Services Web site at http://www.interconnection.bellsouth.com/guides/other_guides/html/gopeu001/index.htm. For services provided through resale, BellSouth agrees to provide KMC III with scheduled maintenance for residence and small business customers consistent with the Operational Understanding available at http://www.interconnection.bellsouth.com/guides/other_guides/html/gopeu001/index.htm. BellSouth agrees to provide KMC III notification of Central Office conversions consistent with the Operational Understanding available at http://www.interconnection.bellsouth.com/guides/other_guides/html/gopeu001/index.htm.

2.7.2 Maintenance charges for premises visits by BellSouth technicians shall be billed by KMC III to its customer, and not by BellSouth. The BellSouth technician shall: (i) contact KMC III for authorization; (ii) provide an estimate of time and materials required to KMC III; and (iii) notify KMC III if a subsequent visit is required. If additional premises work is required that cannot be performed on that visit, BellSouth shall call KMC III to schedule another premises visit. Wherever possible, BellSouth will schedule appointments while a technician is at the premises with the customer on the line so that KMC III can schedule a new appointment with BellSouth and customer at the same time.

2.7.2.1 BellSouth will bill maintenance charges for premises visits to KMC III in accordance with the provisions of this Attachment.

2.7.3 When maintenance charges are incurred during premises visits, the BellSouth technician shall present the customer with a copy of a nonbranded warranty page that has the order number or trouble ticket number and date on it. If additional work will be necessary, BellSouth shall make an additional appointment with KMC III's customer.

2.7.4 BellSouth shall provide KMC III with access to a user interface which is functionally equivalent to the interface used by BellSouth's retail maintenance and

repair centers for processing trouble reports. Such functionality shall be that described in the corresponding documentation located on the BellSouth CLEC Web site at http://www.interconnection.bellsouth.com/guides/html/lens_tafi/html.

2.7.5 BellSouth supports the machine-to-machine maintenance and repair interface defined by the ANSI National Standards (T1.227, T1.228 and T1.262). Upon completion of a Joint Implementation Agreement (JIA) with BellSouth, KMC III shall have access to this interface. The functionality of this interface shall be that described in the corresponding documentation published on the BellSouth Interconnection Services Web site at http://www.interconnection.bellsouth.com/guides/activation/pdf/clec_jia.pdf. A sample JIA is also available at this site.

2.7.5.1 In addition to systems and interfaces currently available, BellSouth may provide KMC III access to other maintenance and repair interfaces (as the result of the CCP or other stimuli) whose functionality matches the corresponding documentation published on the BellSouth Interconnection Services Web site at http://www.interconnection.bellsouth.com. Such interfaces shall not replace current interfaces prior to being addressed through CCP.

2.7.6 BellSouth shall make every reasonable effort to notify KMC III upon completion of a trouble report. BellSouth will close out trouble reports in accordance with SQM M&R-3.

2.7.7 KMC III may enter a trouble report with BellSouth when a central office feature or function is not performing. If KMC III's circuit/telephone number that is in trouble is riding a trunk that belongs to another carrier, KMC III can submit a central office features trouble report if the circuit/telephone number has switch translations on it.

2.7.8 BellSouth shall advise KMC III of known central office, interoffice (such as fiber cuts), and repeater failures that are known at the time of trouble report issuance. BellSouth shall notify KMC III of switch failures pursuant to the Disaster Recovery Plan in Attachment 10 of this Agreement if applicable. KMC III will also be notified of FCC reportable events after having subscribed to the CLEC email list server in accordance with the Operational Understanding located at Bellsouth's Interconnection Services Web site: http://www.interconnection.bellsouth.com/guides/other_guides/html/gopeu001/index.htm. BellSouth agrees to provide an Estimated Time To Repair (ETTR), an appointment time or commitment time, as appropriate, on all trouble reports. The Parties are responsible for making best efforts to provide prompt verbal notification to each other of significant outages or operations problems which affect the Collocation Space or Premises, to the extent it affects the Collocation Space with an estimated clearing time for restoration, if known. In addition, each Party will provide notification as soon as reasonably practical.

2.7.9 BellSouth will call the KMC III maintenance and repair center with notification in the event that a BellSouth maintenance and repair technician is unable to keep a scheduled repair visit within the same time frames BellSouth provides such notice to itself, its own customers, its affiliates and to any other CLEC. If a scheduled repair visit is missed, KMC III may escalate to BellSouth for expedited repair and a revised estimated completion time.

2.7.9.1 Repair appointments missed due to BellSouth's fault are subject to the SQM M&R-1.

2.7.10 Chronic Problems. Chronic repair problems will receive specialized handling by BellSouth's Customer Wholesale Interconnection Network Services (CWINS) Maintenance Center Chronic Group personnel. BellSouth performs maintenance analysis for chronic problems by reviewing historical trouble tickets. The chronic resolution process is for a network element, service or facility on which three (3) or more trouble tickets have been closed in a thirty (30) day period, obscure or intermitten conditions or upon reasonable request by KMC III. If the analysis indicates a chronic condition exists, a chronic maintenance report will be initiated.

2.7.10.1 The Chronic Group will then perform a detailed analysis of the chronic maintenance report. The chronic resolution process could involve the following:

- Request for service release times
- Circuit monitoring
- Circuit stress testing
- Joint KMC III/BellSouth testing
- Component repair
- Referral to KMC III for resolution

2.7.10.2 Once the chronic condition is resolved, the chronic maintenance report will be closed. If KMC III is involved in the chronic process, notification will be provided to KMC III. When KMC III determines that a chronic condition regarding a circuit or service exists, a request may be made to the CWINS Maintenance Chronic Group for review. The CWINS center will open a chronic maintenance report and perform a chronic resolution procedure. KMC III should provide any test results associated with the reported service at the time the chronic request is made.

2.7.10.3 The chronic process is not intended for resolving immediate trouble conditions. The resolution period will vary based on the complexity of isolating the problem. Immediate trouble conditions should be handled through the normal maintenance reporting process. A status will be provided on all KMC III-initiated chronic requests and will be closed with a call to KMC III's maintenance service center. Once a chronic trouble has been repaired, it remains on a monitoring list for thirty (30) days to ensure the problem has been corrected. Subsequent problems with a chronic circuit are handled on the original chronic ticket, allowing KMC III to work from an existing ticket rather than open a new one each time they experience errors.

2.7.10.4 KMC III can access circuit layout and design information regarding a loop through the Loop Makeup Inquiry Form in LENS and through the Design Layout Report. Such information shall include, but not be limited to, loop length, gauge of wire used, location of bridge taps, and indication of 4-wire or 2-wire loops. To the extent BellSouth's installation and repair personnel have such records or information, BellSouth will inform KMC III of tip/ring reversal, recent engineering changes and loop loss measurements regarding the loop**.**

2.8 Change Management. BellSouth provides a collaborative process for change management of the electronic interfaces through the CCP. Guidelines for this process are set forth in the CCP document. The CCP document may be accessed via the Internet at Bellsouth's Interconnection Services Web site: http://www.interconnection.bellsouth.com/markets/lec/ccp_live/index.html/main/clec.html. Such CCP will provide KMC III with an opportunity to comment on proposed changes and time for BellSouth to consider and modify its proposals based on those comments**.**

2.8.1 BellSouth will provide advance notification prior to issuing new versions of BellSouth's documentation changes, including business rule changes, as described in the process flows in Section 4.0 and in Appendix G of the CCP, located at BellSouth's Interconnection Services Web site: http://www.interconnection.bellsouth.com/markets/lec/ccp_live/index.html/main/clec.html**.**

2.9 Electronic Interfaces. BellSouth's Versioning Policy is part of the CCP. Pursuant to the CCP, BellSouth will issue new software releases for new industry standards for its EDI and TAG electronic interfaces. The Versioning Policy, including the appropriate notification to KMC III, is set forth in the CCP document. The CCP document may be accessed via the Internet at BellSouth's Interconnection Services Web site: http://www.interconnection.bellsouth.com/markets/lec/ccp_live/index.html/main/clec.html.

2.9.1 Rates. BellSouth shall bill KMC III OSS rates pursuant to the terms, conditions and rates for OSS as set forth in Exhibit A of Attachment 2 of this Agreement. KMC III shall bill BellSouth a single manual OSS charge per LSR associated with the "port back" of a telephone number to BellSouth as set forth in Exhibit A of Attachment 2 of this Agreement, until such time as electronic ordering is provided by KMC III to BellSouth at which time the applicable electronic OSS charge set forth in Exhibit A to Attachment 2 of this Agreement would apply. To the extent that KMC III performs another OSS function for BellSouth that BellSouth performs for KMC III, the Parties shall amend this Agreement to include such function subject to the same rates , terms and conditions that apply to BellSouth under this Agreement.

2.9.1.1 The electronic OSS Charges rather than the manual ordering charges shall apply to a LSR submitted by KMC III when BellSouth's electronic interface normally utilized by KMC III is unavailable for reasons other than scheduled maintenance.

In order to receive the electronic OSS charge KMC III must follow the procedure outlined in BellSouth's LOH, located at BellSouth's Interconnection Services Web site: http://interconnection.bellsouth.com/guides/html/leo.html, for every manually submitted LSR.

3. Miscellaneous

3.1 Customer Migration. Neither BellSouth nor KMC III shall prevent or delay a customer from migrating to another carrier because of unpaid bills, denied service, or contract terms.

3.2 Use of Facilities. When a customer of KMC III elects to discontinue service and to transfer such service to another local exchange carrier, including BellSouth, BellSouth shall have the right to reuse the facilities provided to KMC III by BellSouth. In addition, where BellSouth provides local switching, BellSouth may disconnect and reuse facilities when the facility is in a denied state (i.e., service is no longer being provided over the local loop but the switch translations and interoffice facilities have not been disconnected) and BellSouth has received a request to establish new service or transfer service from a customer or a customer's CLEC at the same address served by the denied facility. BellSouth will notify KMC III that such a request has been processed after the disconnect order has been completed. Such notification will be provided via **KMC III**'s line loss notification report which can be found on the PMAP web site at http://pmap.bellsouth.com/default.aspx and is updated on a daily basis except for Sundays.

3.3 Contact Numbers. The Parties agree to provide one another with toll-free (e.g., 1-800#) contact numbers for the purpose of addressing issues related to ordering, provisioning, and maintenance and repair of services. BellSouth shall provide the contact number through BellSouth's Interconnection Services Web site: http://www.interconnection.bellsouth.com/contact/index.html**.** KMC III shall provide a contact number that is separate and distinct from that provided to KMC III's customers. In addition, BellSouth shall provide access to assistance for technical issues other than OSS training inquiries such as connectivity and passwords related to its OSS interfaces. Such assistance will be available twenty-four (24) hours a day, seven (7) days a week via designated telephone number for inquiries and e-mail/web form (the request can be submitted either way) with guaranteed response within an hour.

3.4 Subscription Functions. In cases where BellSouth performs subscription functions for an interexchange carrier (IXC) (i.e., PIC and LPIC changes via Customer Account Record Exchange (CARE)), BellSouth will provide the affected IXCs with the Operating Company Number (OCN) of the local provider for the purpose of obtaining customer billing account and other customer information required under subscription requirements.

3.5 Service Arrangement Reconfiguration. BellSouth shall reconfigure (company initiated activity (CIA) or central office conversion) the KMC III service arrangements of KMC III's customer, for Resale services, or customer, for UNEs or Combinations, in accordance with the FCC's rules regarding Notice of Network Change, 47 C.F.R. § 51.325 *et seq*. as well as the procedures described in the Operational Understanding located at http://www.interconnection.bellsouth.com/guides/other_guides/html/gopeu001/index.htm provided such reconfigurations and procedures comply with applicable FCC and Commission rules and orders. This provision shall not allow BellSouth to change the type of service ordered by KMC III (i.e., Resale, UNE or Combination) to another type of service as a result of such reconfiguration.

3.6 Intercept Referral Messages. The Parties shall provide an intercept referral message for the same period of time that BellSouth currently provides such a message for its own customers. The intercept message shall be similar in format to the intercept referral message currently provided by BellSouth for its own customers.

3.7 Installation/Service Visits/Additional Work. Each Party shall train and direct its employees who have contact with customers of the other Party in the process of provisioning, maintenance or repair not to disparage the other Party or its services in any way to the other Party's customers.

3.7.1 Any written "leave behind" materials that BellSouth technicians provide to KMC III customers shall be non-branded materials that do not identify the work being performed as being by BellSouth. These materials shall include, without limitation, non-branded forms for the customer and non-branded "not at home" cards.

3.8 Escalation Procedures and Contacts. BellSouth's escalation practices are provided in Appendix A and the escalation contact number list is contained in Chapter 4.0 of the Operational Understanding which is provided on BellSouth's Interconnection Services Web site at http://www.interconnection.bellsouth.com/guides/other_guides/html/gopeu001/index.htm.

3.9 Disputes Between KMC III and KMC III's Customers. In general, BellSouth will not become involved in disputes between KMC III and KMC III's customers. If a dispute does arise that cannot be settled without the involvement of BellSouth, KMC III shall contact the designated Service Center for assistance in the dispute resolution. BellSouth will make reasonable efforts to assist KMC III in as timely a manner as possible. BellSouth's involvement will be limited to interfacing with KMC III's employees who are involved in the dispute resolution.

3.10 BellSouth shall constantly work toward resolution of pre-ordering, ordering, provisioning, maintenance and repair, billing and interface issues and disputes. KMC III must contact the appropriate BellSouth work center to record KMC III's issue/dispute and to work with the personnel within the center to reach final

resolution. Should KMC III determine that escalation is required to reach resolution, KMC III should invoke the process appropriate for that work center as spelled out in BellSouth's Operational Understanding located at http://www.interconnection.bellsouth.com/guides for provisioning, maintenance and repair; in Project Management located at http://interconnection.bellsouth.com/centers/html/pm.html for customer care project management; Section 8.0 of the CCP located at http://www.interconnection.bellsouth.com/markets/lec/ccp_live/index.html/main/clec.html for interfaces and in Section 2 of Attachment 7 of this Agreement for billing.

3.11 The Parties will support existing NC/NCI codes to deliver the services available through this Agreement, and necessary to support all technically feasible means and levels of interconnection. The Parties will support the development of new NC/NCI codes to the extent a NC/NCI code does not exist for services available through this Agreement.

3.12 Project Management. Provisioning done pursuant to project management as specified in Section 8 of the LOH, located at BellSouth's Interconnection Services Web site: http://interconnection.bellsouth.com/guides/html/leo.html, will be performed at the interval the Parties negotiated and mutually agreed to prior to the order being placed. BellSouth will offer the shortest interval available.

3.13 Provisioning done pursuant to project management as specified in Section 8 of the LOH will be normally be performed by project management personnel from the provisioning center. Provisioning will be performed at prices no more expensive than those prices applicable to individual service or element orders, unless KMC III negotiated to obtain project management support from BellSouth's Professional Services Group rather use the project management personnel from the provisioning center.

3.14 Personnel assigned by either Party to provisioning being handled on a Project Management basis shall be professional, competent, responsive and effective. Both Parties will use best efforts to resolve any problems with Project Management personnel, practices or procedures on a timely basis and in accordance with the escalation procedures set forth in this Attachment 6.

3.15 Continued Support of Elements or Services No Longer Offered. BellSouth shall continue to support and facilitate the use of elements and services purchased by KMC III during a reasonable period of transition, and in accordance with applicable FCC and Commission rules and orders, and any applicable tariff terms. The Parties will work cooperatively and proactively to mutually agree on a seamless transition plan to alternative service arrangements.

3.16 Annoyance Call Center. Where BellSouth provides switching, BellSouth will process calls made to its Annoyance Call Center and will advise KMC III when it is determined that annoyance calls are originated from one of its customers or its

Customer's customer locations. It is the responsibility of KMC III to take the corrective action necessary up to and including the disconnection of service to its customers or its Customer's customers who make annoying calls. BellSouth shall provide the same level of Annoyance Call Center service to KMC III's customers and its Customer's customers as BellSouth provides to its own customers.

Attachment 7

Billing

TABLE OF CONTENTS

1. PAYMENT AND BILLING ARRANGEMENTS 3

2. BILLING DISPUTES 13

3. COOPERATION IN SUPPLYING BILLING INFORMATION 15

4. RAO HOSTING 15

5. UNBILLABLE REVENUE (CMDS/ADUF/ODUF/EODUF) 19

6. OPTIONAL DAILY USAGE FILE 21

7. ACCESS DAILY USAGE FILE 23

8. ENHANCED OPTIONAL DAILY USAGE FILE (EODUF) 26

Rates……Exhibit A
Credit Profile……...Exhibit B
Billing Adjustment Request (BAR)……...Exhibit C

BILLING

1. PAYMENT AND BILLING ARRANGEMENTS

The terms and conditions set forth in this Attachment shall apply to all services ordered and provisioned pursuant to this Agreement.

1.1 Billing. BellSouth will bill through the Carrier Access Billing System (CABS), Integrated Billing System (IBS) and/or the Customer Records Information System (CRIS) depending on the particular service(s) provided to KMC III under this Agreement. BellSouth will format all bills in Carrier Billing Output Specification (CBOS) Standard or CLUB/EDI format, depending on the type of service provided. For those services where standards have not yet been developed, BellSouth's billing format will change to comply with standards that are finalized by the applicable industry forum.

1.1.1 For any service(s) BellSouth receives from KMC III, KMC III shall continue to bill BellSouth in the same format and using the same media as it did, and to the extent any services were provided, prior to this Agreement. Any changes to format or media used will be pursuant to the mutual agreement of KMC III and BellSouth.

1.1.2 BellSouth bills will include sufficient itemization and bill detail to identify the particular elements or services provided. BellSouth shall provide KMC III a monthly bill that includes all charges incurred by and credits and/or adjustments due to KMC III for those elements or services ordered, established, utilized, discontinued or performed pursuant to this Agreement. Each bill shall set forth the quantity and description of each such element or service billed to KMC III, including USOCs and similar information, where applicable. All charges billed to KMC III must indicate the state from which such charges were incurred except in cross boundary state situations. A listing of such cross boundary exchanges is set forth in BellSouth's state specific General Subscriber Services Tariff (GSST) Section A3 where the serving state will be indicated.

1.1.3 The Bill Date, as defined herein, must be present on each bill transmitted by one Party to the other Party and must be a valid calendar date. Subject to Section 32.3 of the General Terms and Conditions of this Agreement, charges incurred under this Agreement, including back billing and billing disputes, are subject to a one (1) year limitations period. However, both Parties recognize that situations exist which may necessitate billing beyond one (1) year and to the extent not bound by the applicable limitations period. These exceptions are:

Charges connected with jointly provided services whereby meet point billing guidelines require either party to rely on records provided by a third party and such records have not been provided in a timely manner;

Charges incorrectly billed due to erroneous information supplied by the non-billing Party.

1.1.4 Any switched access charges associated with interexchange carrier access to the local exchange lines resold under Attachment 1 to this Agreement will be billed by, and due to BellSouth.

1.1.5 BellSouth will render bills each month for lines on established bill days for each of KMC III's accounts. Where feasible, BellSouth shall offer to render bills in electronic format. For any other billing media formats, BellSouth will offer to provide them so long as BellSouth supports their generation. If KMC IIIrequests multiple billing media or additional copies of the bills, BellSouth will provide these at an additional cost as described in FCC No. 1 Tariff Section 13.3.6.3. To the extent KMC III supports the medium requested, additional copies of bills will be provided to BellSouth upon request from BellSouth at an additional cost equal to that which BellSouth would impose upon KMC III.

1.1.6 BellSouth will bill KMC III in advance for all services to be provided during the ensuing billing period except charges associated with service usage and nonrecurring charges, which will be billed in arrears.

1.1.6.1 For resold services provided under Attachment 1 to this Agreement, charges will be calculated on an individual customer account level, including, if applicable, any charge for usage or usage allowances. BellSouth will also bill KMC III, and KMC III will be responsible for and remit to BellSouth, all charges applicable to resold services including but not limited to 911 and E911 charges, customer common line charges, federal subscriber line charges, telecommunications relay charges (TRS), and franchise fees, unless otherwise ordered by a Commission.

1.1.7 Except as otherwise forth in this Agreement, neither Party will perform billing and collection services for the other Party or the other Party's Affiliates solely as a result of the execution of this Agreement.

1.1.8 In the event that this Agreement or an amendment to this Agreement effects a rate change to recurring rate elements that are billed in advance, Bellsouth will make an adjustment to such recurring rates billed in advance and at the previously effective rate. The adjustment shall reflect billing at the new rates from the Effective Date of the Agreement or amendment.

1.2 Establishing Accounts. After submitting a credit profile and deposit, if required under Section 1.8 below, and receiving certification as a local exchange carrier from the appropriate regulatory agency, KMC III will provide the appropriate BellSouth Advisory Team/Local Contract Manager the necessary documentation to enable BellSouth to establish accounts for Local Interconnection, Network Elements and Other Services, Collocation and/or resold services. Such documentation shall include the Application for Master Account, if applicable, proof of authority to provide telecommunications services, the appropriate Company Code (CC) or Operating Company Number (OCN) for each state as assigned by the National Exchange Carriers Association (NECA), Carrier

Identification Code (CIC), Access Customer Name and Abbreviation (ACNA), Blanket Letter of Authorization (LOA), Misdirected Number form, and a tax exemption certificate, if applicable. Notwithstanding anything to the contrary in this Agreement, KMC III may not order services under a new account established in accordance with this Section 1.2 until thirty (30) days after all information specified in this Section 1.2 is received from KMC III. Notwithstanding the foregoing, this Section shall have no impact on KMC III in a state, if KMC III already has established accounts with BellSouth in that state including the overall CC or OCN if KMC III is operating in more than one (1) state.

1.2.1 Upon request from KMC III, BellSouth shall provide its ACNA, CIC, OCN, and Tax Exemption Letter to establish an account for the purpose of KMC III billing to BellSouth. BellSouth will provide a LOA to KMC III upon the execution of this Agreement. Notwithstanding the foregoing, this Section shall have no impact on BellSouth, if BellSouth already has established accounts with KMC III.

1.2.2 OCN, CC, CIC, ACNA and BAN Changes. Except to the extent otherwise agreed to in a separate agreement between the Parties, if KMC III needs to change its ACNA(s)/BAN(s)/CC(s)/CIC(s)/OCN(s) under which it operates when KMC III has already been conducting business utilizing that ACNA(s)/BAN(s)/CC(s)/CIC(s)/OCN(s), KMC III shall bear all costs incurred by BellSouth to convert KMC III to the new ACNA(s)/BAN(s)/CC(s)/CIC(s)/OCN(s). Such ACNA/BAN/CC/CIC/OCN conversion charges include the time required to make system updates to all of KMC III's customer records and will be handled by the BFR/NBR process.

1.3 Payment Responsibility. Subject to the provisions of Section 1 of this Attachment, each Party shall be responsible for and make payment for all charges billed. Payments made by each Party to the other Party as payment on an account will be credited to the billed Party's accounts receivable master account. Neither Party will become involved in billing disputes that may arise between the other Party and its customers.

1.4 Payment Due. Payment for services will be due on or before the next bill date (Payment Due Date) and is payable in immediately available funds. Payment is considered to have been made when received by the billing Party.

1.4.1 If the payment due date falls on a Sunday or on a Holiday that is observed on a Monday, the payment due date shall be the first non-Holiday day following such Sunday or Holiday. If the payment due date falls on a Saturday or on a Holiday which is observed on Tuesday, Wednesday, Thursday, or Friday, the payment due date shall be the last non-Holiday day preceding such Saturday or Holiday. If payment is not received by the payment due date, a late payment charge, as set forth in Section 1.6, below, shall apply.

1.5 Tax Exemption. Upon BellSouth's receipt of a tax exemption certificate, the total amount billed to KMC III will not include those taxes or fees from which KMC III is exempt. KMC III will be solely responsible for the computation, tracking, reporting and payment of all taxes and like fees associated with the services provided to the customer of KMC III.

1.6 Late Payment. Subject to the provisions of Section 1.7 below, if any portion of the payment is received by BellSouth after the payment due date as set forth in Section 1.4 above, or if any portion of the payment is received by BellSouth in funds that are not immediately available to BellSouth, then a late payment charge shall be due to BellSouth. The late payment charge shall be the portion of the payment not received by the payment due date multiplied by a late factor and will be applied on a per bill basis. The late factor shall be as set forth in Section A2 of the GSST, Section B2 of the Private Line Service Tariff or Section E2 of the BellSouth intrastate Access Services Tariff, as appropriate. In addition to any applicable late payment charges, KMC III may be charged a fee for all returned checks as set forth in Section A2 of the GSST or pursuant to the applicable state law.

1.7 Suspension or Termination of Services. The procedures for suspension or termination of services are as follows:

1.7.1 Except as otherwise provided for in specific provisions of this Agreement that address suspension or termination of services, each Party reserves the right to suspend or terminate service in the event of prohibited, unlawful or, in the case of resold services, improper use of the other Party's facilities or service (e.g., making calls in a manner reasonably to be expected to frighten, abuse, torment or harass another, etc.) as described under the providing Party's tariff, abuse of the other Party's facilities, or any violation or noncompliance with this Agreement and/or each Party's tariffs, where applicable. Upon detection of such use, the detecting Party will provide written notice to the other Party that additional applications for service may be refused, that any pending orders for service may not be completed, and/or that access to ordering systems may be suspended if such use is not corrected or ceased by the fifteenth (15th) day following the date of the notice. In addition, the detecting Party may, at the same time, provide written notice to the person designated by the other Party to receive notices of noncompliance that the detecting Party may terminate the provision of existing services to the other Party if such use is not corrected or ceased by the thirtieth (30th) day following the date of the initial notice. Notwithstanding the foregoing, if the Party that receives the notice disagrees with the issuing Party's allegations, it shall provide written notice to the issuing Party stating the reasons therefor. Upon delivery of such notice of dispute, the foregoing provisions regarding suspension and termination will be stayed, and the Parties shall work in good faith to resolve any dispute over such allegations and/or the action to be taken. If the Parties are unable to resolve such dispute amicably, the issuing Party shall proceed, if at all, pursuant to the dispute

resolution provisions set forth in the General Terms and Conditions to this Agreement.

1.7.2 BellSouth reserves the right to suspend or terminate service for nonpayment. If payment of amounts not subject to a billing dispute, as described in Section 2 below, is not received by the bill date in the month after the original bill date, BellSouth will provide written notice to KMC III that additional applications for service may be refused, that any pending orders for service may not be completed, and/or that access to ordering systems may be suspended if payment of such amounts, and all other amounts not in dispute that become past due subsequent to the issuance of the written notice (Additional Amounts Owned), is not received by the fifteenth (15th) day following the date of the notice. In addition, BellSouth may, at the same time, provide written notice that BellSouth may discontinue the provision of existing services to KMC III if payment of such amounts, and all other Additional Amounts Owed that become past due subsequent to the issuance of the written notice, is not received by the thirtieth (30th) day following the date of the initial notice. Upon request, BellSouth will provide information to KMC III of the Additional Amounts Owed that must be paid prior to the time periods set forth in the written notice to avoid suspension of access to ordering systems or discontinuance of the provision of existing services as set forth in the initial written notice. Notwithstanding the foregoing, in the event that BellSouth proceeds with service discontinuance pursuant to this Section of the Agreement, such discontinuance shall be performed in accordance with the applicable state law governing telecommunications service withdrawal and/or discontinuance.

1.7.3 In the case of termination of services, all billed charges, as well as applicable termination charges, shall become due provided, however, if there are any disputed charges at the time of termination, the Parties will continue to pursue the resolution of the dispute. In the event that the Parties are unable to resolve the dispute, it will be resolved using the dispute resolution process.

1.7.4 The Parties will comply with the applicable FCC and Commission rules and orders relating to suspension, discontinuance and termination of service. Upon termination of service on the billed Party's account, such service to billed Party's customers will be denied. The billed Party is solely responsible for notifying the customers of the proposed disconnection of the service. The billing Party will reestablish service for the billed Party upon payment of all past due charges and the appropriate connection fee subject to the billing Party’s normal application procedures.

1.7.5 Notices of suspension or termination of service will be delivered to the appropriate billing contact and/or address at the billed Party, as well as to the notice contacts specified in the General Terms and Conditions.

1.8 Deposit Policy. BellSouth reserves the right to secure the accounts of new CLECs (entities with no existing relationship with BellSouth for the purchase of wholesale services as of the Effective Date) and existing CLECs (entities with an existing

relationship with BellSouth for the purchase of wholesale services as of the Effective Date) with a suitable form of security pursuant to this Section. KMC III may satisfy the requirements of this Section through the presentation of a payment guarantee with terms acceptable to BellSouth executed by a company with a credit rating of greater than or equal to 5A1. Upon request, KMC III shall complete a credit profile and provide in the form attached hereto as Exhibit B.

1.8.1 With the exception of new CLECs with a D&B credit rating equal to 5A1, BellSouth may secure the accounts of all new CLECs consistent with the terms set forth in subsection 1.8.2. Further, if KMC III has filed for bankruptcy protection within twelve (12) months prior to the Effective Date of this Agreement, BellSouth may treat KMC III, for purposes of establishing security on its accounts, as a new CLEC as set forth in subsection 1.8.5.

1.8.2 The security required by BellSouth shall take the form of cash, an Irrevocable Letter of Credit (BellSouth Form or substantially similar in substantive parts to the BellSouth Form), Surety Bond (BellSouth Form or substantially similar in substantive parts to the BellSouth Form).

1.8.3 The amount of the security shall not exceed two (2) month's estimated billing for new CLECs or actual billing for existing CLECs. Interest shall accrue per the appropriate BellSouth tariff on cash deposits.

1.8.3.1 The amount of the security due from KMC III shall be reduced by the undisputed amounts due to KMC III by BellSouth pursuant to Attachment 3 of this Agreement that have not been paid by the Due Date at the time of the request by BellSouth to KMC III for a deposit. Within ten (10) days of BellSouth's payment of such undisputed past due amounts to KMC III, KMC III shall provide the additional security necessary to establish the full amount of the deposit that BellSouth originally requested.

1.8.4 Any such security shall in no way release KMC III from its obligation to make complete and timely payments of its bills, subject to the bill dispute procedures set forth in Section 2 below.

1.8.5 BellSouth may secure the accounts of existing CLECs where an existing CLEC does not meet the following factors:

1.8.5.1 KMC III must have a good payment history, based upon the preceding twelve (12) month period. A good payment history shall mean that less than ten percent (10%) of the non-disputed receivable balance is received over thirty (30) days past the Due Date.

1.8.5.2 The existing CLEC's liquidity status, based upon a review of EBITDA, is EBITDA positive for the prior four (4) quarters of financials (at least one of which must be an audited financial report) excluding any nonrecurring charges or special restructuring charges.

1.8.5.3 If the existing CLEC has a current bond rating, such CLEC must have a bond rating of BBB or above or the existing CLEC has a current bond rating between CCC and BB and meets the following criteria for the last Fiscal Year End and for the prior four (4) quarters of reported financials:

1.8.5.3.1 Free cash flow positive;

1.8.5.3.2 Positive tangible net worth; and

1.8.5.3.3 Debt/tangible net worth rating of two point five (2.5) or better.

1.8.6 Subject to Section 1.8.7 following, in the event KMC III fails to remit to BellSouth any deposit requested pursuant to this Section within thirty (30) days of KMC III's receipt of such request, service to KMC III may be terminated in accordance with the terms of Section 1.7 above and subtending sections of this Attachment, and any security deposits will be applied to KMC III's account(s). Notwithstanding the foregoing, in the event that BellSouth proceeds with service discontinuance pursuant to this section of the Agreement, such discontinuance shall be performed in accordance with the applicable state law governing telecommunications service withdrawal and/or discontinuance.

1.8.7 The Parties will work together to determine the need for or amount of a reasonable deposit**.** If KMC III does not agree with the amount or need for a deposit requested by BellSouth, KMC III may file a petition with the Commissions for resolution of the dispute and both Parties shall cooperatively seek expedited resolution of such dispute. BellSouth shall not terminate service during the pendency of such a proceeding provided that KMC III posts a payment bond for fifty percent (50%) of the requested deposit during the pendency of the proceeding. Notwithstanding the foregoing, in the event that BellSouth proceeds with service discontinuance pursuant to this section of the Agreement, such discontinuance shall be performed in accordance with the applicable state law governing telecommunications service withdrawal and/or discontinuance.

1.8.8 At any such time as the provision of services to KMC III is terminated pursuant to Section 1.7 above, the amount of the deposit will be credited against KMC III's account(s) and any credit balance that may remain will be refunded immediately.

1.8.9 Subject to a standard of commercial reasonableness, if a material change in the circumstances of KMC III so warrants and/or gross monthly billing has increased more than twenty-five percent (25%) beyond the level most recently used to determine the level of security deposit, BellSouth reserves the right to request additional security subject to the criteria set forth herein this Section 1.8.

1.8.10 BellSouth shall refund, release or return any security, including all accrued interest, if any, within thirty (30) days of its determination that such security is no longer

required by the terms of this Section 1.8 above or within thirty (30) days of KMC III establishing that it satisfies the standards set forth in Section 1.8.5 above. KMC III may make the requisite showing in a letter directed to the Notices recipients set forth in the General Terms and Conditions of this Agreement. KMC III shall attach supporting financial reports to such letter and such documents shall be accorded confidential treatment, in accordance with Section 12 of the General Terms and Conditions, unless such documents are otherwise publicly available.

1.9 Notices. All bills and notices regarding billing matters, including notices relating to security deposits, suspension or termination of services, and rejection of additional orders shall be forwarded to the billing contacts and/or addresses designated by each Party in the establishment of its billing accounts.

1.9.1 Upon request of KMC III, BellSouth's Initial Notice to KMC III that additional applications for service may be refused, that any pending orders for service may not be completed, and/or that access to ordering systems may be suspended if payment of such amounts, and all other amounts not in dispute that become past due before refusal, incompletion or suspension, is not received by the fifteenth (15th) day following the date of the notice will be supplied to KMC III's billing contact and to the individual(s) listed in the Notices provision of the General Terms and Conditions of this Agreement (such notice sent to the individual(s) listed in the Notices provision of the General Terms and Conditions of this Agreement shall be provided as a stand-alone document and shall not be accompanied by bills that may be generated concurrently with the notice, unless such individual(s) also serves as a billing contact). KMC III shall notify BellSouth's billing department of any changes to the Notices contact(s). Notices of security deposits and termination of services also shall be sent via certified mail to the individual(s) listed in the Notices provision of the General Terms and Conditions of this Agreement. Such notices must be sent in accordance with the time frames set forth in Section 1.7.

1.10 Rates. Rates for Optional Daily Usage File (ODUF), Access Daily Usage File (ADUF), Enhanced Optional Daily Usage File (EODUF) and Centralized Message Distribution Service (CMDS) are set out in Exhibit A to this Attachment. If no rate is identified in this Attachment, the rate for the specific service or function will be as set forth in applicable BellSouth tariff or as negotiated by the Parties upon request by either Party.

2. BILLING DISPUTES

2.1 Each Party agrees to notify the other Party in writing electronically upon the discovery of a billing dispute. Each Party shall report all billing disputes to the other Party using either the Mass Dispute spreadsheet format for multiple disputes or the BAR form attached hereto as Exhibit C.

2.1.1 Confirmation of the receipt of a dispute filed via the BAR form or multiple disputes filed via the Mass Dispute spreadsheet format will be sent by the billing

Party to the disputing Party via the same medium used in filing the dispute(s). An automatic response will be provided for those filed electronically and a response will be provided within three (3) business days for those filed via fax. Both Parties will use the Claim Number inserted on the BAR or the Mass Dispute spreadsheet format as the indicator of the appropriate dispute in question.

2.1.2 All Valid Disputes, as defined in Section 2.3 below, shall be posted so as to remove disputed amounts from the collections process prior to that process being initiated.

2.1.3 Upon request by either Party, the other Party will provide a spreadsheet containing a current list of open disputes along with the requesting Party's audit/claim number listed on the BAR form, the requesting Party's audit/claim number that is assigned to the dispute, and the disputed dollar amount. The Parties shall engage in mutually agreed upon meetings, no less frequent than quarterly, if requested by either Party, to discuss the status of the open disputes. If the billed Party disagrees with the resolution of the dispute by the billing Party, the Parties agree to use the existing escalation procedures between the Parties to resolve the dispute. If the Parties are unable to resolve the dispute through escalation, either Party may initiate the dispute resolution process.

2.1.4 To the extent necessary in order to resolve billing disputes, the Parties shall engage in face-to-face meetings no more frequently than every six (6) months, unless otherwise mutually agreed by the Parties, for the purpose of resolving billing disputes. Unless otherwise mutually agreed upon by the Parties the meeting shall be held at a mutually convenient time at a BellSouth location, selected by BellSouth, to which KMC III agrees to travel at its expense.

2.1.5 In the event of a billing dispute, the Parties will endeavor to resolve the dispute within sixty (60) days of the notification date. BellSouth has provided a contact name and escalation spreadsheet by appropriate center based upon service type of the dispute at Bellsouth's Interconnection Services Web site: http://interconnection.bellsouth.com/forms/html/billing&collections.html to assist in this effort. If the Parties are unable within the sixty (60) day period to reach resolution, then the unresolved dispute will be resolved in accordance with the dispute resolution provisions in the General Terms and Conditions of this Agreement.

2.2 For purposes of this Section, a billing dispute means a reported dispute of a specific amount of money actually billed by either Party. The dispute must be clearly explained by the disputing Party and, to the extent possible, supported by relevant, written documentation (including e.g. reference to or copies of the relevant bill pages), which clearly shows the basis for disputing charges (Valid Dispute). Examples of written document considered relevant include, but are not limited to: the number of minutes the disputing Party believes were properly and improperly billed, the rate the disputing Party believes was erroneously applied and

that which it believes was applicable, the factor the disputing Party believes was erroneously applied and that which it believes was applicable, etc. All reasonable requests for additional relevant information made by one Party to another shall be honored. The billed Party may withhold payment of such disputed amounts but late payment charges and interest will be assessed per Section 2.4 below, pending resolution of the dispute. These late payment charges must be disputed until the initial dispute is resolved. Claims by the billed Party for damages of any kind will not be considered a billing dispute for purposes of this Section. If the billing dispute is resolved in favor of the billing Party, the disputing Party will make payment of any of the disputed amount owed to the billing Party within thirty (30) days. If the billing dispute is resolved in favor of the billed Party, any credits due to the billed Party, pursuant to the billing dispute, will be applied to the billed Party's account by the billing Party within thirty (30) days.

2.3 If a Party disputes a charge and does not pay such charge by the payment due date, or if a payment or any portion of a payment is received by either Party after the payment due date, or if a payment or any portion of a payment is received in funds which are not immediately available to the other Party, then a late payment charge where applicable, shall be assessed. Such late payment charge shall be calculated in accordance with Section 1.6 above. There will be no late payment charges on disputed amounts, if the withholding Party prevails in the billing dispute.

3. COOPERATION IN SUPPLYING BILLING INFORMATION

3.1 BellSouth shall cooperate with and provide all information reasonably requested by KMC III to aid in the accurate and timely billing of access and reciprocal compensation (including compensation for ISP-bound traffic) to BellSouth and any third party carriers, including BellSouth Affiliates.

4. RAO HOSTING

4.1 Remote Accounting Office ("RAO") Hosting, Calling Card and Third Number Settlement System (CATS) and Non-Intercompany Settlement System (NICS) services provided to KMC III by BellSouth will be in accordance with the methods and practices regularly applied by BellSouth to its own operations during the term of this Agreement, including such revisions as may be made from time to time by BellSouth and for which BellSouth will provide KMC III with thirty (30) days' advanced notice of such revisions.

4.2 KMC III shall furnish all relevant information required by BellSouth for the provision of RAO Hosting, CATS and NICS.

4.3 Charges or credits, as applicable, will be applied by BellSouth to KMC III on a monthly basis in arrears. Amounts due (excluding adjustments) are payable within thirty (30) days of receipt of the billing statement.

4.4 KMC III must have its own unique hosted RAO code. Where BellSouth is the selected CMDS interfacing host, KMC III must request that BellSouth establish a unique hosted RAO code for KMC III. Such request shall be in writing to the BellSouth RAO Hosting coordinator and must be submitted at least eight (8) weeks prior to provision of services pursuant to this Section. Services shall commence on a date mutually agreed by the Parties.

4.5 BellSouth will receive messages from KMC III that are to be processed by BellSouth, another LEC in the BellSouth region or a LEC outside the BellSouth region. KMC III shall send all messages to BellSouth no later than sixty (60) days after the message date.

4.6 BellSouth will perform invoice sequence checking, standard EMI format editing, and balancing of message data with the EMI trailer record counts on all data received from KMC III.

4.7 All data received from KMC III that is to be processed or billed by another LEC within the BellSouth region will be distributed to that LEC in accordance with the Agreement(s) in effect between BellSouth and the involved LEC.

4.8 All data received from KMC III that is to be placed on the CMDS network for distribution outside the BellSouth region will be handled in accordance with the agreement(s) in effect between BellSouth and its connecting contractor.

4.9 BellSouth will receive messages from the CMDS network that are destined to be processed by KMC III and will forward them to KMC III on a daily basis for processing.

4.10 Transmission of message data between BellSouth and KMC III will be via CONNECT:Direct or CONNECT:Enterprise Client utilizing secure File Transfer Protocol (FTP).

4.10.1 Data circuits (private line or dial-up) will be required between BellSouth and KMC III for the purpose of data transmission when utilizing CONNECT:Direct. Where a dedicated line is required, KMC III will be responsible for ordering the circuit and coordinating the installation with BellSouth. KMC III will also be responsible for any charges associated with this line. CSU/DSU equipment required on the BellSouth end to attach the line to the mainframe computer and to transmit data will be the responsibility of KMC III. Where a dial-up facility is required, dial circuits will be installed in the BellSouth data center by BellSouth and the associated charges assessed to KMC III. Additionally, all message toll charges associated with the use of the dial circuit by KMC III will be the responsibility of KMC III. Associated equipment on the BellSouth end, including a modem, will be the responsibility of BellSouth. All equipment, including modems and software, that is required on the KMC III end for the purpose of data transmission will be the responsibility of KMC III.

4.10.2 If KMC III utilizes CONNECT:Enterprise Client for data file transmission, purchase of the CONNECT:Enterprise Client software will be the responsibility of KMC III.

4.11 All messages and related data exchanged between BellSouth and KMC III will be formatted for EMI formatted records and packed between appropriate EMI header and trailer records in accordance with accepted industry standards.

4.12 KMC III will maintain recorded message detail necessary to recreate files provided to BellSouth for a period of three (3) calendar months beyond the related message dates.

4.13 Should it become necessary for KMC III to send data to BellSouth more than sixty (60) days past the message date(s), KMC III will notify BellSouth in advance of the transmission of the data. BellSouth will work with its connecting contractor and/or KMC III, where necessary, to notify all affected LECs.

4.14 Should an error be detected by the EMI format edits performed by BellSouth on data received from KMC III, the entire pack containing the affected data will not be processed by BellSouth. BellSouth will notify KMC III of the error. KMC III will correct the error(s) and will resend the entire pack to BellSouth for processing. In the event that an out-of-sequence condition occurs on subsequent packs, KMC III will resend these packs to BellSouth after the pack containing the error has been successfully reprocessed by BellSouth.

4.15 In association with message distribution service, BellSouth will provide KMC III with associated intercompany settlements reports (CATS and NICS) as appropriate.

4.16 Notwithstanding anything in this Agreement to the contrary, in no case shall either Party be liable to the other for any direct or consequential damages incurred as a result of the obligations set out in this Section.

4.17 <u>RAO Compensation</u>

4.17.1 Rates for message distribution service provided by BellSouth for KMC III are set forth in Exhibit A.

4.17.2 Rates for data transmission associated with message distribution service are set forth in Exhibit A.

4.18 <u>Intercompany Settlements Messages</u>

4.18.1 Intercompany Settlements Messages facilitate the settlement of revenues associated with traffic originated from or billed by KMC III as a facilities based provider of local exchange telecommunications services outside the BellSouth region. Only traffic that originates in one Bell operating territory and bills in

another Bell operating territory is included. Traffic that originates and bills within the same Bell operating territory will be settled on a local basis between KMC III and the involved company(ies), unless that company is participating in NICS.

4.18.2 Both traffic that originates outside the BellSouth region by KMC III and is billed within the BellSouth region, and traffic that originates within the BellSouth region and is billed outside the BellSouth region by KMC III, is covered by CATS. Also covered is traffic that either is originated by or billed by KMC III, involves a company other than KMC III, qualifies for inclusion in the CATS settlement, and is not originated or billed within the BellSouth region (NICS).

4.18.3 Once KMC III is operating within the BellSouth territory, revenues associated with calls originated and billed within the BellSouth region will be settled via NICS.

4.18.4 BellSouth will receive the monthly NICS reports from Telcordia on behalf of KMC III. BellSouth will distribute copies of these reports to KMC III on a monthly basis.

4.18.5 BellSouth will receive the monthly CATS reports from Telcordia on behalf of KMC III. BellSouth will distribute copies of these reports to KMC III on a monthly basis.

4.18.6 BellSouth will collect the revenue earned by KMC III from the Bell operating company in whose territory the messages are billed via CATS, less a per message billing and collection fee of five cents ($0.05), on behalf of KMC III. BellSouth will remit the revenue billed by KMC III to the Bell operating company in whose territory the messages originated, less a per message billing and collection fee of five cents ($0.05), on behalf on KMC III. These two (2) amounts will be netted together by BellSouth and the resulting charge or credit issued to KMC III monthly via a monthly CABS miscellaneous bill.

4.18.7 BellSouth will collect the revenue earned by KMC III within the BellSouth territory from another CLEC also within the BellSouth territory (NICS) where the messages are billed, less a per message billing and collection fee of five cents ($0.05), on behalf of KMC III. BellSouth will remit the revenue billed by KMC III within the BellSouth region to the CLEC also within the BellSouth region, where the messages originated, less a per message billing and collection fee of five cents ($0.05). These two (2) amounts will be netted together by BellSouth and the resulting charge or credit issued to KMC III monthly via a monthly CABS miscellaneous bill.

4.18.8 BellSouth and KMC III agree that monthly netted amounts of less than fifty dollars ($50.00) will not be settled.

5. UNBILLABLE REVENUE (CMDS/ADUF/ODUF/EODUF)

5.1 Recording Failure(s)

5.1.1 When BellSouth carries or switches calls and loses or fails to make a recording, regardless of whether KMC III or BellSouth are performing the billing function, BellSouth shall notify KMC III of the amount of estimated KMC III unbillable revenue in accordance with Section 5.3. BellSouth shall compensate KMC III for this unbillable revenue within three (3) bill periods. Such compensation shall be net of revenue BellSouth demonstrates it would have received for services provided to KMC III, if any, but for which BellSouth could not render bills as a result of any recording loss(es).

5.1.2 The term "unbillable" refers to a message or service that cannot be billed to the correct KMC III customer.

5.2 Lost, Damaged, or Destroyed Message Data

5.2.1 When KMC III message data is lost, damaged, or destroyed as a result of BellSouth error or omission, including but not limited to, the acts or omissions of BellSouth employees, agents and suppliers, and the failures of BellSouth hardware, software and other BellSouth equipment, when BellSouth is performing the billing and/or recording function, and the data cannot be recovered or resupplied within two (2) bill periods, BellSouth shall notify KMC III of the estimated amount of KMC III unbillable revenue in accordance with Section 5.3. BellSouth shall compensate KMC III for this unbillable revenue within three (3) bill periods.

5.2.2 When KMC III message data is lost, damaged, or destroyed as a result of BellSouth error or omission, including but not limited to, the acts or omissions of BellSouth employees, agents and suppliers, and the failures of BellSouth hardware, software and other BellSouth equipment, when KMC III is performing the billing and/or recording function, and the data cannot be recovered or resupplied within two (2) bill periods, BellSouth shall notify KMC III of the estimated amount of KMC III unbillable revenue in accordance with Section 5.3 of this Attachment. BellSouth shall compensate KMC III for the net loss to KMC III within three (3) bill periods.

5.3 Determination of Losses

5.3.1 Material Loss. BellSouth shall review its daily controls to determine if data has been lost. The message threshold (five thousand (5000) (this is the number of messages on the switch for all carriers including inter and intraLATA as well as Local) messages within the missing data period) used by BellSouth to determine if there has been a material loss of its own messages will also be used to determine if a material loss of KMC III's messages has occurred. A nonmaterial loss will not be reported and any unbillable revenues will not be credited to KMC III. When it is known that there has been a material loss, actual message and minute volumes

should be reported if possible. Where actual data is not available, a full day shall be estimated for the recording entity as outlined in the Section 5.3.1.1 below. The loss is then determined by subtracting recorded data, if any is available, from the estimated total day's business.

5.3.1.1 Estimated Volumes. From message and minute volume reports for the entity experiencing the loss, BellSouth shall secure message/minute counts for the corresponding day of the week for eight (8) weeks preceding the week in which the loss occurred. BellSouth shall apply the appropriate Average Revenue Per Message (ARPM) to the estimated message volume to arrive at the estimated lost revenue.

5.3.2 Complete Loss. Estimated message and minute volumes for each loss consisting of an entire/tape or file lost in transit, lost after receipt, degaussed before processing, received blank or unreadable, etc. shall be reported. Also the loss of one or more boxes of operator tickets shall be estimated and reported if applicable.

5.3.3 BellSouth shall notify KMC III in advance of the date of monthly billing statement that shall contain such adjustments. BellSouth shall provide sufficient information to allow KMC III to analyze the data supporting BellSouth's estimate of revenue due to KMC III.

6. OPTIONAL DAILY USAGE FILE

6.1 Upon written request from KMC III, BellSouth will provide the Optional Daily Usage File (ODUF) service to KMC III pursuant to the terms and conditions set forth in this Section.

6.2 KMC III shall furnish all relevant information required by BellSouth for the provision of the ODUF.

6.3 The ODUF feed will contain messages that were carried over the BellSouth Network and processed in the BellSouth Billing System, but billed to a KMC III customer.

6.4 Charges for the ODUF will appear on KMC IIIs' monthly bills for the previous month's usage. The charges are as set forth in Exhibit A. KMC III will be billed at the ODUF rates that are in effect at the end of the previous month.

6.5 The ODUF feed will contain both rated and unrated messages. All messages will be in the standard Alliance for Telecommunications Industry Solutions (ATIS) EMI record format.

6.6 Messages that error in the billing system of KMC III will be the responsibility of KMC III. If, however, KMC III should encounter significant volumes of errored messages that prevent processing by KMC III within its systems, BellSouth will work with KMC III to determine the source of the errors and the appropriate

resolution. Upon request from KMC III, BellSouth shall resend errored messages in accordance with SQM B-9.

6.7 The following specifications shall apply to the ODUF feed.

6.7.1 ODUF Messages to be Transmitted

6.7.1.1 The following messages recorded by BellSouth will be transmitted to KMC III:

6.7.1.1.1 Message recording for per use/per activation type services (examples: Three -Way Calling, Verify, Interrupt, Call Return, etc.)

6.7.1.1.2 Measured Local

6.7.1.1.3 Directory Assistance messages

6.7.1.1.4 IntraLATA Toll

6.7.1.1.5 WATS and 800 Service

6.7.1.1.6 N11

6.7.1.1.7 Information Service Provider Messages

6.7.1.1.8 Operator Services Messages

6.7.1.1.9 Operator Services Message Attempted Calls (Network Element only)

6.7.1.1.10 Credit/Cancel Records

6.7.1.1.11 Usage for Voice Mail Message Service

6.7.1.2 Rated Incollects (messages BellSouth receives from other revenue accounting offices) can also be on ODUF. Rated Incollects will be intermingled with BellSouth recorded rated and unrated usage. Rated Incollects will not be packed separately.

6.7.1.3 BellSouth will perform duplicate record checks on records processed to ODUF. Any duplicate messages detected will be deleted and not sent to KMC III.

6.7.1.4 In the event that KMC III detects a duplicate on ODUF they receive from BellSouth, KMC III will drop the duplicate message and will not return the duplicate to BellSouth.

6.7.2 <u>ODUF Physical File Characteristics</u>

6.7.2.1 ODUF will be distributed to KMC III via CONNECT:Direct, CONNECT:Enterprise Client or another mutually agreed medium. The ODUF

feed will be a variable block format. The data on the ODUF feed will be in a non-compacted EMI format (one hundred seventy five (175) byte format plus modules). It will be created on a daily basis Monday through Friday except holidays. Details such as dataset name and delivery schedule will be addressed during negotiations of the distribution medium. There will be a maximum of one (1) dataset per workday per OCN.

6.7.2.2 Data circuits (private line or dial-up) will be required between BellSouth and KMC III for the purpose of data transmission as set forth in Section 4.10.1 above.

6.7.2.3 If KMC III utilizes CONNECT:Enterprise Client for data file transmission, purchase of the CONNECT:Enterprise Client software will be the responsibility of KMC III.

6.7.3 ODUF Packing Specifications

6.7.3.1 A pack will contain a minimum of one (1) message record or a maximum of ninety-nine thousand nine hundred and ninety-nine (99,999) message records plus a pack header record and a pack trailer record. One transmission can contain a maximum of ninety-nine (99) packs and a minimum of one (1) pack.

6.7.3.2 The OCN, From RAO, and Invoice Number will control the invoice sequencing. The From RAO will be used to identify to KMC III which BellSouth RAO that is sending the message. BellSouth and KMC III will use the invoice sequencing to control data exchange. BellSouth will be notified of sequence failures identified by KMC III and resend the data as quickly as technically possible.

6.7.3.3 The data will be packed using ATIS EMI records.

6.7.4 ODUF Pack Rejection

6.7.4.1 KMC III will notify BellSouth within one (1) business day of rejected packs (via the mutually agreed medium). Packs could be rejected because of pack sequencing discrepancies or a critical edit failure on the Pack Header or Pack Trailer records (i.e., out-of-balance condition on grand totals, invalid data populated). Standard ATIS EMI error codes will be used. KMC III will not be required to return the actual rejected data to BellSouth. Rejected packs will be corrected and retransmitted to KMC III by BellSouth.

6.7.5 ODUF Control Data

6.7.5.1 KMC III will send one (1) confirmation record per pack that is received from BellSouth. This confirmation record will indicate KMC III's receipt of the pack and acceptance or rejection of the pack. Pack Status Code(s) will be populated using standard ATIS EMI error codes for packs that were rejected by KMC III for reasons stated in the above Section.

6.7.6 ODUF Testing

6.7.6.1 Upon request from KMC III, BellSouth shall send ODUF test files to KMC III. The Parties agree to review and discuss the ODUF content and/or format. For testing of usage results, BellSouth shall request that KMC III set up a production (live) file. The live test may consist of KMC III's employees making test calls for the types of services KMC III requests on ODUF. These test calls are logged by KMC III, and the logs are provided to BellSouth. These logs will be used to verify the files. Testing will be completed within thirty (30) days from the date on which the initial test file was sent.

7. ACCESS DAILY USAGE FILE

7.1 Upon written request from KMC III, BellSouth will provide the Access Daily Usage File (ADUF) service to KMC III pursuant to the terms and conditions set forth in this Section.

7.2 KMC III shall furnish all relevant information required by BellSouth for the provision of ADUF.

7.3 ADUF will contain access messages associated with a port that KMC III has purchased from BellSouth

7.4 Charges for ADUF will appear on KMC III's monthly bills for the previous month's usage. The charges are as set forth in Exhibit A. KMC III will be billed at the ADUF rates that are in effect at the end of the previous month.

7.5 Messages that error in the billing system of KMC III will be the responsibility of KMC III. If, however, KMC III should encounter significant volumes of errored messages that prevent processing by KMC III within its systems, BellSouth will work with KMC III to determine the source of the errors and the appropriate resolution. Upon request from KMC III, BellSouth shall resend errored messages in accordance with SQM B-9.

7.6 ADUF Messages To Be Transmitted

7.6.1 The following messages recorded by BellSouth will be transmitted to KMC III:

7.6.1.1 Recorded originating and terminating interstate and intrastate access records associated with a port.

7.6.1.2 Recorded terminating access records for undetermined jurisdiction access records associated with a port.

7.6.2 BellSouth will perform duplicate record checks on records processed to ADUF. Any duplicate messages detected will be dropped and not sent to KMC III.

7.6.3 In the event that KMC III detects a duplicate on ADUF they receive from BellSouth, KMC III will drop the duplicate message and will not return the duplicate to BellSouth.

7.6.4 ADUF Physical File Characteristics

7.6.4.1 ADUF will be distributed to KMC III via CONNECT:Direct, CONNECT:Enterprise Client or another mutually agreed medium. The ADUF feed will be a fixed block format. The data on the ADUF feed will be in a non-compacted EMI format (two hundred and ten (210) byte). It will be created on a daily basis Monday through Friday except holidays. Details such as dataset name and delivery schedule will be addressed during negotiations of the distribution medium. There will be a maximum of one (1) dataset per workday per OCN.

7.6.4.2 Data circuits (private line or dial-up) will be required between BellSouth and KMC III for the purpose of data transmission as set forth in Section 4.10.1 above.

7.6.4.3 If KMC III utilizes CONNECT:Enterprise Client for data file transmission, purchase of the CONNECT:Enterprise Client software will be the responsibility of KMC III.

7.6.5 ADUF Packing Specifications

7.6.5.1 A pack will contain a minimum of one (1) message record or a maximum of ninety-nine thousand nine hundred and ninety-nine (99,999) message records plus a pack header record and a pack trailer record. One (1) transmission can contain a maximum of ninety-nine (99) packs and a minimum of one (1) pack.

7.6.5.2 The OCN, From RAO, and Invoice Number will control the invoice sequencing. The From RAO will be used to identify to KMC III which BellSouth RAO is sending the message. BellSouth and KMC III will use the invoice sequencing to control data exchange. BellSouth will be notified of sequence failures identified by KMC III and resend the data as quickly as technically possible.

7.6.5.3 The data will be packed using ATIS EMI records.

7.6.6 ADUF Pack Rejection

7.6.6.1 KMC III will notify BellSouth within one (1) business day of rejected packs (via the mutually agreed medium). Packs could be rejected because of pack sequencing discrepancies or a critical edit failure on the Pack Header or Pack Trailer records (i.e. out-of-balance condition on grand totals, invalid data populated). Standard ATIS EMI error codes will be used. KMC III will not be required to return the actual rejected data to BellSouth. Rejected packs will be corrected and retransmitted to KMC III by BellSouth.

7.6.7 ADUF Control Data

7.6.7.1 KMC III will send one (1) confirmation record per pack that is received from BellSouth. This confirmation record will indicate KMC III's receipt of the pack and acceptance or rejection of the pack. Pack Status Code(s) will be populated using standard ATIS EMI error codes for packs that were rejected by KMC III for reasons stated in the above Section.

7.6.8 ADUF Testing

7.6.8.1 Upon request from KMC III, BellSouth shall send a test file of generic data to KMC III via Connect:Direct or Text File via E-Mail. The Parties agree to review and discuss the test file's content and/or format.

8. ENHANCED OPTIONAL DAILY USAGE FILE

8.1 Upon written request from KMC III, BellSouth will provide the Enhanced Optional Daily Usage File (EODUF) service to KMC III pursuant to the terms and conditions set forth in this Section. EODUF will only be sent to existing ODUF subscribers who request the EODUF option.

8.2 KMC III shall furnish all relevant information required by BellSouth for the provision of the EODUF.

8.3 The EODUF will provide usage data for local calls originating from resold Flat Rate Business and Residential Lines.

8.4 Charges for delivery of the EODUF will appear on KMC III's monthly bills for the previous month's usage. The charges are as set forth in Exhibit A. KMC III will be billed at the EODUF rates that are in effect at the end of the previous month.

8.5 All messages will be in the standard Alliance for Telecommunications Industry Solutions (ATIS) EMI record format.

8.6 Messages that error in the billing system of KMC III will be the responsibility of KMC III. If, however, KMC III should encounter significant volumes of errored messages that prevent processing by KMC III within its systems, BellSouth will work with KMC III to determine the source of the errors and the appropriate resolution. Upon request from KMC III, BellSouth shall resend errored messages in accordance with SQM B-9.

8.7 The following specifications shall apply to the EODUF feed.

8.7.1 Usage To Be Transmitted

8.7.1.1 The following messages recorded by BellSouth will be transmitted to KMC III:

8.7.1.1.1 Customer usage data for flat rated local call originating from KMC III's customer lines (1FB or 1FR). The EODUF record for flat rate messages will include:

8.7.1.1.1.1 Date of Call

8.7.1.1.1.2 From Number

8.7.1.1.1.3 To Number

8.7.1.1.1.4 Connect Time

8.7.1.1.1.5 Conversation Time

8.7.1.1.1.6 Method of Recording

8.7.1.1.1.7 From RAO

8.7.1.1.1.8 Rate Class

8.7.1.1.1.9 Message Type

8.7.1.1.1.10 Billing Indicators

8.7.1.1.1.11 Bill to Number

8.7.1.2 BellSouth will perform duplicate record checks on EODUF records processed to ODUF. Any duplicate messages detected will be deleted and not sent to KMC III.

8.7.1.3 In the event that KMC III detects a duplicate on EODUF they receive from BellSouth, KMC III will drop the duplicate message (KMC III will not return the duplicate to BellSouth).

8.7.2 <u>Physical File Characteristics</u>

8.7.2.1 The EODUF feed will be distributed to KMC III over their existing ODUF feed. The EODUF messages will be intermingled among KMC III's ODUF messages. The EODUF will be a variable block format (2476) with an LRECL of 2472. The data on the EODUF will be in a non-compacted EMI format (one hundred and seventy-five (175) byte format plus modules). It will be created on a daily basis (Monday through Friday except holidays).

8.7.2.2 Data circuits (private line or dial-up) may be required between BellSouth and KMC III for the purpose of data transmission. Where a dedicated line is required, KMC III will be responsible for ordering the circuit, overseeing its installation and coordinating the installation with BellSouth. KMC III will also be responsible for any charges associated with this line. CSU/DSU equipment required on the BellSouth end to attach the line to the mainframe computer and to transmit successfully ongoing will be the responsibility of KMC III. Where a dial-up facility

will be required, dial circuits will be installed in the BellSouth data center by BellSouth and the associated charges assessed to KMC III. Additionally, all message toll charges associated with the use of the dial circuit by KMC III will be the responsibility of KMC III. Associated equipment on the BellSouth end, including a modem, will be the responsibility of BellSouth. All equipment, including modems and software, that is required on KMC III's end for the purpose of data transmission will be the responsibility of KMC III.

8.7.3 Packing Specifications

8.7.3.1 A pack will contain a minimum of one (1) message record or a maximum of ninety-nine thousand nine hundred and ninety-nine (99,999) message records plus a pack header record and a pack trailer record. One (1) transmission can contain a maximum of ninety-nine (99) packs and a minimum of one (1) pack.

8.7.3.2 The Operating Company Number (OCN), From Revenue Accounting Office (RAO), and Invoice Number will control the invoice sequencing. The From RAO will be used to identify to KMC III which BellSouth RAO is sending the message. BellSouth and KMC III will use the invoice sequencing to control data exchange. BellSouth will be notified of sequence failures identified by KMC III and resend the data as quickly as technically possible.

8.7.3.3 The data will be packed using ATIS EMI records.

CMDS - Alabama														Attachment: 7		Exhibit: A		
CATEGORY		RATE ELEMENTS	Interim	Zone	BCS	USOC	RATES($)					Svc Order Submitted Elec per LSR	Svc Order Submitted Manually per LSR	Incremental Charge - Manual Svc Order vs. Electronic-1st	Incremental Charge - Manual Svc Order vs. Electronic-Add'l	Incremental Charge - Manual Svc Order vs. Electronic-Disc 1st	Incremental Charge - Manual Svc Order vs. Electronic-Disc Add'l	
							Rec	Nonrecurring		Nonrecurring Disconnect		OSS Rates($)						
								First	Add'l	First	Add'l	SOMEC	SOMAN	SOMAN	SOMAN	SOMAN	SOMAN	
CMDS																		
	CENTRALIZED MESSAGE DISTRIBUTION SERVICE (CMDS)																	
		CMDS: Message Processing, per message					0.004											
		CMDS: Data Transmission (CONNECT:Direct), per message					0.001											
ODUF/ADUF/CMDS																		
	ACCESS DAILY USAGE FILE (ADUF)																	
		ADUF: Message Processing, per message					0.007037											
		ADUF: Data Transmission (CONNECT:DIRECT), per message					0.000113											
	OPTIONAL DAILY USAGE FILE (ODUF)																	
		ODUF: Recording, per message					0.000011											
		ODUF: Message Processing, per message					0.004101											
		ODUF: Message Processing, per Magnetic Tape provisioned					42.67											
		ODUF: Data Transmission (CONNECT:DIRECT), per message					0.000094											
	Notes: If no rate is identified in the contract, the rate for the specific service or function will be as set forth in applicable BellSouth tariff or as negotiated by the Parties upon request by either Party.																	

CMDS - Florida														Attachment: 7		Exhibit: A		
CATEGORY		RATE ELEMENTS	Interim	Zone	BCS	USOC	RATES($)					Svc Order Submitted Elec per LSR	Svc Order Submitted Manually per LSR	Incremental Charge - Manual Svc Order vs. Electronic-1st	Incremental Charge - Manual Svc Order vs. Electronic-Add'l	Incremental Charge - Manual Svc Order vs. Electronic-Disc 1st	Incremental Charge - Manual Svc Order vs. Electronic-Disc Add'l	
							Rec	Nonrecurring		Nonrecurring Disconnect		OSS Rates($)						
								First	Add'l	First	Add'l	SOMEC	SOMAN	SOMAN	SOMAN	SOMAN	SOMAN	
CMDS																		
	CENTRALIZED MESSAGE DISTRIBUTION SERVICE (CMDS)																	
		CMDS: Message Processing, per message					0.004											
		CMDS: Data Transmission (CONNECT:Direct), per message					0.001											
ODUF/ADUF/CMDS																		
	ACCESS DAILY USAGE FILE (ADUF)																	
		ADUF: Message Processing, per message					0.001656											
		ADUF: Data Transmission (CONNECT:DIRECT), per message					0.0001245											
	OPTIONAL DAILY USAGE FILE (ODUF)																	
		ODUF: Recording, per message					0.0000071											
		ODUF: Message Processing, per message					0.002146											
		ODUF: Message Processing, per Magnetic Tape provisioned					35.91											
		ODUF: Data Transmission (CONNECT:DIRECT), per message					0.00010375											
	Notes: If no rate is identified in the contract, the rate for the specific service or function will be as set forth in applicable BellSouth tariff or as negotiated by the Parties upon request by either Party.																	

CMDS - Georgia														Attachment: 7		Exhibit: A		
CATEGORY		RATE ELEMENTS	Interim	Zone	BCS	USOC	RATES($)					Svc Order Submitted Elec per LSR	Svc Order Submitted Manually per LSR	Incremental Charge - Manual Svc Order vs. Electronic-1st	Incremental Charge - Manual Svc Order vs. Electronic-Add'l	Incremental Charge - Manual Svc Order vs. Electronic-Disc 1st	Incremental Charge - Manual Svc Order vs. Electronic-Disc Add'l	
							Rec	Nonrecurring		Nonrecurring Disconnect		OSS Rates($)						
								First	Add'l	First	Add'l	SOMEC	SOMAN	SOMAN	SOMAN	SOMAN	SOMAN	
CMDS																		
	CENTRALIZED MESSAGE DISTRIBUTION SERVICE (CMDS)																	
		CMDS: Message Processing, per message					0.004											
		CMDS: Data Transmission (CONNECT:Direct), per message					0.001											
ODUF/ADUF/CMDS																		
	ACCESS DAILY USAGE FILE (ADUF)																	
		ADUF: Message Processing, per message					0.001713											
		ADUF: Data Transmission (CONNECT:DIRECT), per message					0.00013027											
	OPTIONAL DAILY USAGE FILE (ODUF)																	
		ODUF: Recording, per message					0.0000068											
		ODUF: Message Processing, per message					0.002167											
		ODUF: Message Processing, per Magnetic Tape provisioned					36.06											
		ODUF: Data Transmission (CONNECT:DIRECT), per message					0.00010856											
	Notes: If no rate is identified in the contract, the rate for the specific service or function will be as set forth in applicable BellSouth tariff or as negotiated by the Parties upon request by either Party.																	

CMDS - Kentucky														Attachment: 7		Exhibit: A		
CATEGORY		RATE ELEMENTS	Interim	Zone	BCS	USOC	RATES($)					Svc Order Submitted Elec per LSR	Svc Order Submitted Manually per LSR	Incremental Charge - Manual Svc Order vs. Electronic-1st	Incremental Charge - Manual Svc Order vs. Electronic-Add'l	Incremental Charge - Manual Svc Order vs. Electronic-Disc 1st	Incremental Charge - Manual Svc Order vs. Electronic-Disc Add'l	
							Rec	Nonrecurring		Nonrecurring Disconnect		OSS Rates($)						
								First	Add'l	First	Add'l	SOMEC	SOMAN	SOMAN	SOMAN	SOMAN	SOMAN	
CMDS																		
	CENTRALIZED MESSAGE DISTRIBUTION SERVICE (CMDS)																	
		CMDS: Message Processing, per message					0.004											
		CMDS: Data Transmission (CONNECT:Direct), per message					0.001											
ODUF/ADUF/CMDS																		
	ACCESS DAILY USAGE FILE (ADUF)																	
		ADUF: Message Processing, per message					0.001857											
		ADUF: Data Transmission (CONNECT:DIRECT), per message					0.00012447											
	OPTIONAL DAILY USAGE FILE (ODUF)																	
		ODUF: Recording, per message					0.0000136											
		ODUF: Message Processing, per message					0.002506											
		ODUF: Message Processing, per Magnetic Tape provisioned					35.90											
		ODUF: Data Transmission (CONNECT:DIRECT), per message					0.00010372											
	Notes: If no rate is identified in the contract, the rate for the specific service or function will be as set forth in applicable BellSouth tariff or as negotiated by the Parties upon request by either Party.																	

CMDS - Louisiana														Attachment: 7		Exhibit: A		
CATEGORY		RATE ELEMENTS	Interim	Zone	BCS	USOC	RATES($)					Svc Order Submitted Elec per LSR	Svc Order Submitted Manually per LSR	Incremental Charge - Manual Svc Order vs. Electronic-1st	Incremental Charge - Manual Svc Order vs. Electronic-Add'l	Incremental Charge - Manual Svc Order vs. Electronic-Disc 1st	Incremental Charge - Manual Svc Order vs. Electronic-Disc Add'l	
							Rec	Nonrecurring		Nonrecurring Disconnect		OSS Rates($)						
								First	Add'l	First	Add'l	SOMEC	SOMAN	SOMAN	SOMAN	SOMAN	SOMAN	
CMDS																		
	CENTRALIZED MESSAGE DISTRIBUTION SERVICE (CMDS)																	
		CMDS: Message Processing, per message					0.004											
		CMDS: Data Transmission (CONNECT:Direct), per message					0.001											
ODUF/ADUF/CMDS																		
	ACCESS DAILY USAGE FILE (ADUF)																	
		ADUF: Message Processing, per message					0.007983											
		ADUF: Data Transmission (CONNECT:DIRECT), per message					0.00012681											
	OPTIONAL DAILY USAGE FILE (ODUF)																	
		ODUF: Recording, per message					0.0000117											
		ODUF: Message Processing, per message					0.004641											
		ODUF: Message Processing, per Magnetic Tape provisioned					48.45											
		ODUF: Data Transmission (CONNECT:DIRECT), per message					0.00010568											
	Notes: If no rate is identified in the contract, the rate for the specific service or function will be as set forth in applicable BellSouth tariff or as negotiated by the Parties upon request by either Party.																	

CMDS - Mississippi														Attachment: 7		Exhibit: A		
CATEGORY		RATE ELEMENTS	Interim	Zone	BCS	USOC	RATES($)					Svc Order Submitted Elec per LSR	Svc Order Submitted Manually per LSR	Incremental Charge - Manual Svc Order vs. Electronic-1st	Incremental Charge - Manual Svc Order vs. Electronic-Add'l	Incremental Charge - Manual Svc Order vs. Electronic-Disc 1st	Incremental Charge - Manual Svc Order vs. Electronic-Disc Add'l	
							Rec	Nonrecurring		Nonrecurring Disconnect		OSS Rates($)						
								First	Add'l	First	Add'l	SOMEC	SOMAN	SOMAN	SOMAN	SOMAN	SOMAN	
CMDS																		
	CENTRALIZED MESSAGE DISTRIBUTION SERVICE (CMDS)																	
		CMDS: Message Processing, per message					0.004											
		CMDS: Data Transmission (CONNECT:Direct), per message					0.001											
ODUF/ADUF/CMDS																		
	ACCESS DAILY USAGE FILE (ADUF)																	
		ADUF: Message Processing, per message					0.008087											
		ADUF: Data Transmission (CONNECT:DIRECT), per message					0.00012803											
	OPTIONAL DAILY USAGE FILE (ODUF)																	
		ODUF: Recording, per message					0.0000063											
		ODUF: Message Processing, per message					0.004707											
		ODUF: Message Processing, per Magnetic Tape provisioned					49.04											
		ODUF: Data Transmission (CONNECT:DIRECT), per message					0.00010669											
	Notes: If no rate is identified in the contract, the rate for the specific service or function will be as set forth in applicable BellSouth tariff or as negotiated by the Parties upon request by either Party.																	

CMDS - North Carolina														Attachment: 7		Exhibit: A		
CATEGORY		RATE ELEMENTS	Interim	Zone	BCS	USOC	RATES($)					Svc Order Submitted Elec per LSR	Svc Order Submitted Manually per LSR	Incremental Charge - Manual Svc Order vs. Electronic-1st	Incremental Charge - Manual Svc Order vs. Electronic-Add'l	Incremental Charge - Manual Svc Order vs. Electronic-Disc 1st	Incremental Charge - Manual Svc Order vs. Electronic-Disc Add'l	
							Rec	Nonrecurring		Nonrecurring Disconnect		OSS Rates($)						
								First	Add'l	First	Add'l	SOMEC	SOMAN	SOMAN	SOMAN	SOMAN	SOMAN	
CMDS																		
	CENTRALIZED MESSAGE DISTRIBUTION SERVICE (CMDS)																	
		CMDS: Message Processing, per message					0.004											
		CMDS: Data Transmission (CONNECT:Direct), per message					0.001											
ODUF/ADUF/CMDS																		
	ACCESS DAILY USAGE FILE (ADUF)																	
		ADUF: Message Processing, per message					0.01435											
		ADUF: Data Transmission (CONNECT:DIRECT), per message					0.0001277											
	OPTIONAL DAILY USAGE FILE (ODUF)																	
		ODUF: Recording, per message					0.0003											
		ODUF: Message Processing, per message					0.0032											
		ODUF: Message Processing, per Magnetic Tape provisioned					54.61											
		ODUF: Data Transmission (CONNECT:DIRECT), per message					0.00004											
	Notes: If no rate is identified in the contract, the rate for the specific service or function will be as set forth in applicable BellSouth tariff or as negotiated by the Parties upon request by either Party.																	

CMDS - South Carolina														Attachment: 7		Exhibit: A		
CATEGORY		RATE ELEMENTS	Interim	Zone	BCS	USOC	RATES($)					Svc Order Submitted Elec per LSR	Svc Order Submitted Manually per LSR	Incremental Charge - Manual Svc Order vs. Electronic-1st	Incremental Charge - Manual Svc Order vs. Electronic-Add'l	Incremental Charge - Manual Svc Order vs. Electronic-Disc 1st	Incremental Charge - Manual Svc Order vs. Electronic-Disc Add'l	
							Rec	Nonrecurring		Nonrecurring Disconnect		OSS Rates($)						
								First	Add'l	First	Add'l	SOMEC	SOMAN	SOMAN	SOMAN	SOMAN	SOMAN	
CMDS																		
	CENTRALIZED MESSAGE DISTRIBUTION SERVICE (CMDS)																	
		CMDS: Message Processing, per message					0.004											
		CMDS: Data Transmission (CONNECT:Direct), per message					0.001											
ODUF/ADUF/CMDS																		
	ACCESS DAILY USAGE FILE (ADUF)																	
		ADUF: Message Processing, per message					0.008061											
		ADUF: Data Transmission (CONNECT:DIRECT), per message					0.00013036											
	OPTIONAL DAILY USAGE FILE (ODUF)																	
		ODUF: Recording, per message					0.0000216											
		ODUF: Message Processing, per message					0.004704											
		ODUF: Message Processing, per Magnetic Tape provisioned					48.87											
		ODUF: Data Transmission (CONNECT:DIRECT), per message					0.00010863											
	Notes: If no rate is identified in the contract, the rate for the specific service or function will be as set forth in applicable BellSouth tariff or as negotiated by the Parties upon request by either Party.																	

CMDS - Tennessee														Attachment: 7		Exhibit: A		
CATEGORY		RATE ELEMENTS	Interim	Zone	BCS	USOC	RATES($)					Svc Order Submitted Elec per LSR	Svc Order Submitted Manually per LSR	Incremental Charge - Manual Svc Order vs. Electronic-1st	Incremental Charge - Manual Svc Order vs. Electronic-Add'l	Incremental Charge - Manual Svc Order vs. Electronic-Disc 1st	Incremental Charge - Manual Svc Order vs. Electronic-Disc Add'l	
							Rec	Nonrecurring		Nonrecurring Disconnect		OSS Rates($)						
								First	Add'l	First	Add'l	SOMEC	SOMAN	SOMAN	SOMAN	SOMAN	SOMAN	
CMDS																		
	CENTRALIZED MESSAGE DISTRIBUTION SERVICE (CMDS)																	
		CMDS: Message Processing, per message					0.004											
		CMDS: Data Transmission (CONNECT:Direct), per message					0.001											
ODUF/ADUF/CMDS																		
	ACCESS DAILY USAGE FILE (ADUF)																	
		ADUF: Message Processing, per message					0.0158054											
		ADUF: Data Transmission (CONNECT:DIRECT), per message					0.0001387											
	OPTIONAL DAILY USAGE FILE (ODUF)																	
		ODUF: Recording, per message					0.0000044											
		ODUF: Message Processing, per message					0.0027366											
		ODUF: Message Processing, per Magnetic Tape provisioned					52.75											
		ODUF: Data Transmission (CONNECT:DIRECT), per message					0.0000339											
	Notes: If no rate is identified in the contract, the rate for the specific service or function will be as set forth in applicable BellSouth tariff or as negotiated by the Parties upon request by either Party.																	

BELLSOUTH
Interconnection Services

Credit Profile

Return by Fax to: 404-986-0166

Complete, sign and fax to: 404-986-0166 Attention: Business Credit Management	Estimated Monthly billing with BellSouth $_____
For questions concerning this application call 888-634-4114	New customer ☐ Existing customer ☐

Please Print And Complete All Information. | Attach Copy of Fiscal Audited Statement (if available)

Type of Business Applying For:
☐ Local (Resale) ☐ Facility Based ☐ Payphone Services Provider (# of lines in the first 6 months) _____
☐ Access ☐ CMRS (Wireless) ☐ Other_____

Company Information

Business Name (Legal Name)	Doing Business As (Trade Style)		
Please Check One: ☐ Corporation ☐ Partnership ☐ Sole-Proprietor ☐ Other _____			
Street Address	City	State	Zip
Corporate Office Location (If different from above)	City	State	Zip
(Area Code) Telephone Number	(Area Code) Fax Number	E mail address of business	
Are you presently a Bellsouth Customer in another area of business?	☐ Yes	☐ No	
Contact name for additional information (if needed)	Contact e mail address:		

Officer's Names

President	CFO	CEO

Company History

Year Business Established	Principal Business of Firm	Company Web Site:

Business Credit References

Company Name	City	State	(Area Code) Telephone Number
Account Number	Contact Name		
Company Name	City	State	(Area Code) Telephone Number
Account Number	Contact Name		
Company Name	City	State	(Area Code) Telephone Number
Account Number	Contact Name		

Bank Reference

Bank Name	City	State	Account Number
Banking Officer	(Area Code) Telephone Number	(Area Code) Fax Number	

I hereby authorize you to release to BellSouth any and all information, which they may request concerning my account. I understand that such information will be held strictly confidential and will remain BellSouth's property whether or not credit is extended. I understand that security may be required by BellSouth to establish service. I certify that the above information provided for this credit profile is true and correct to the best of my knowledge.

Signature (Authorized Individual Only)	**Print Name**	**Date (MM/DD/YYYY)**

BellSouth Interconnection
Billing Adjustment Request Form (BAR) RF1461

Carrier Dispute Section:

1. * Date (yyyy-mm-dd):	2. * New Dispute ☐ Yes ☐ No	3. * Carrier Claim/Audit Number: Carrier Name:
4. * Select Service Type: Click Here To Select Dispute Service Type		
5. * Carrier (IXC) ACNA/CLEC/OCN:		6. *BAN / Q Account / PSP Account:
7. * End User Telephone Number (If Q Account):		8. * BellSouth Circuit number(s) (If Applicable):
9. * Amount Disputed:	10.☐ Recurring Charges / 11. ☐ NonRecurring Charges	12. * Bill Dates/Invoice Dates: or From: & To: Dates (YYYY-MM-DD)
13. Amount Withheld from Bill:		14. * # BAN Number(s)/Q Account(s) Short Paid:

15. * Reason Amount Is In Question ***(Tariff or Contract Reference as appropriate):*** {Continue on second page if needed}

Click Here To Choose Late Payment Charge Type

☐ Attached, is a marked-up copy of the page(s) on which the questioned item(s) appears:

Additional Information (i.e. page number(s), item number(s) on bill etc.)

☐ **Click here to indicate a Spreadsheet is attached listing dispute details. Note: Required for Mass Disputes.**

Select Mass Dispute Type: Click Here To Select Mass Dispute Type

This type of dispute must be submitted via the dispute templates found on the following URL.
http://www.interconnection.bellsouth.com/forms/html/billing&collections.html

(Note: Only one dispute type may be submitted per Audit Number on the BAR RF1461 Form.)

Disputing Carrier Contact Section:

16. Name:	17. e-mail:
18. Telephone #:	19. (Area Code) Fax #:
20. Address:	

BellSouth Dispute Receipt Acknowledgement Section:

21. Date (yyyy-mm-dd)	22. BellSouth Audit # or BDATS Log #:	23. Contact Number: Contact Name:

Dispute Rejection Section:

☐ Dispute Rejected See Field # 33 For Explanation:

Billing Adjustment Response Section:

24. $ Amount Disputed:	25. $ Credit:	26. $ Debit	27. $ Denied:	28. $ Additional Credit:	29. $ Additional Debit:

30. $ Net Credit / Debit:	31. Invoice or Bill Adjustment will appear: Bill Section Adjustment will appear: Click To Select Bill Section

32. BAN Number(s) Q Account(s) Credit/Debit Applied To:

33. Explanation - {Continue on second page if needed}:

34. Service Rep Name:	36. Fax #:
35. Telephone #:	37. Date: (yyyy-mm-dd):

38. BellSouth considers this dispute resolved; if we do not hear from you within 5 business days we will consider this dispute closed and concurred. **"All UN-Disputed Monies Are Now Due."**

* **Indicates this is a required field see list of field descriptions.**

This form may be found at: http://www.interconnection.bellsouth.com/forms/html/billing&collections.html

02/05/03

2000 BellSouth. All Rights Reserved
Private/Proprietary Contains Private and / or Proprietary Information. May not be used or disclosed outside the BellSouth companies except pursuant to a written agreement.

Ksr (Rev 12-20-2002) Version 19 (Added LPC & PSP Provider information to form.)

BellSouth Interconnection
Billing Adjustment Request Form (BAR) RF1461

Additional Explanation & Notes Page

Carrier Additional Notes Section:

Carrier Dispute Section: - Continued - (Additional Dispute Notes)
15. * Reason Amount Is In Question *(Tariff or Contract Reference as appropriate):* **(Additional Notes)**

BellSouth Additional Notes Section:

Billing Adjustment Response Section - Continued - (Additional Rejection/Resolution Explanation Notes)
33. Explanation:

2000 BellSouth. All Rights Reserved
Private/Proprietary Contains Private and / or Proprietary Information. May not be used or disclosed outside the BellSouth companies except pursuant to a written agreement.

Attachment 8

Rights-of-Way, Conduits and Pole Attachments

Rights-of-Way, Conduits and Pole Attachments

BellSouth will provide nondiscriminatory access to any pole, duct, conduit, or right-of-way owned or controlled by BellSouth pursuant to 47 U.S.C. § 224, as amended by the Act, pursuant to terms and conditions of a license agreement subsequently negotiated with BellSouth's Competitive Structure Provisioning Center.

Attachment 9

Performance Measurements and Associated Remedies

PERFORMANCE MEASUREMENTS AND ASSOCIATED REMEDIES

Upon a particular Commission's issuance of an Order pertaining to Performance Measurements and any associated remedies or enforcement mechanisms (including SEEMs measures and payments) in a proceeding applicable to all CLECs generally, BellSouth shall implement in that state such Performance Measurements and any associated remedies or enforcement mechanisms (including SEEMs measures and payments) as of the date specified by the Commission. Performance Measurements and any associated remedies or enforcement mechanisms (including SEEMs measures and payments) that have been ordered in a particular state can currently be accessed via the internet at https://pmap.bellsouth.com. The attached Service Quality Measurements (SQM) plan adopted by the Florida Commission on February 14, 2002, as it presently exists and as it may be modified in the future, is being included as the performance measurements and associated remedies or enforcement mechanisms (including SEEMs measures and payments) currently in place for the state of Tennessee. At such time that the TRA issues a subsequent Order pertaining to Performance Measurements and any associated remedies or enforcement mechanisms (including SEEMs measures and payments), such Performance Measurements and any associated remedies or enforcement mechanisms (including SEEMs measures and payments) shall supersede the SQM contained in this Agreement. Nothing in this Attachment 9 shall supercede a Party's right to other remedies or legal recourse available under other provisions of this Agreement, the Act and Applicable Law; provided, however, that the payment of any associated remedies or enforcement mechanisms to each CLEC shall be credited against any liability associated with or related to BellSouth's service performance and shall not be considered an admission against interest or an admission of culpability or liability in any legal, regulatory or other proceeding, nor constitute evidence that BellSouth failed to comply with or has violated any state or federal law or regulation.

Attachment 10

BellSouth Disaster Recovery Plan

CONTENTS

PAGE

1.0	Purpose	2
2.0	Single Point of Contact	2
3.0	Identifying the Problem	2
3.1	Site Control	3
3.2	Environmental Concerns	4
4.0	The Emergency Control Center (ECC)	4
5.0	Recovery Procedures	5
5.1	CLEC Outage	5
5.2	BellSouth Outage	5
5.2.1	Loss of Central Office	6
5.2.2	Loss of a Central Office with Serving Wire Center Functions	6
5.2.3	Loss of a Central Office with Tandem Functions	6
5.2.4	Loss of a Facility Hub	7
5.3	Combined Outage (CLEC and BellSouth Equipment)	7
6.0	T1 Identification Procedures	7
7.0	Acronyms	8
8.0	Hurricane Information	8
9.0	BST Disaster Management Plan	8

1.0 PURPOSE

In the unlikely event of a disaster occurring that affects BellSouth's long-term ability to deliver traffic to a Competitive Local Exchange Carrier (CLEC), general procedures have been developed by BellSouth to hasten the recovery process in accordance with the Telecommunications Service Priority (TSP) Program established by the Federal Communications Commission to identify and prioritize telecommunication services that support national security or emergency preparedness (NS/EP) missions. Since each location is different and could be affected by an assortment of potential problems, a detailed recovery plan is impractical. However, in the process of reviewing recovery activities for specific locations, some basic procedures emerge that appear to be common in most cases.

These general procedures should apply to any disaster that affects the delivery of traffic for an extended time period. Each CLEC will be given the same consideration during an outage, and service will be restored as quickly as possible.

This document will cover the basic recovery procedures that would apply to every CLEC.

2.0 SINGLE POINT OF CONTACT

When a problem is experienced, regardless of the severity, the BellSouth Network Management Center (NMC) will observe traffic anomalies and begin monitoring the situation. Controls will be appropriately applied to insure the operability of BellSouth's network; and, in the event that a switch or facility node is lost, the NMC will attempt to circumvent the failure using available reroutes.

BellSouth's NMC will remain in control of the restoration efforts until the problem has been identified as being a long-term outage. At that time, the NMC will contact BellSouth's Emergency Control Center (ECC) and relinquish control of the recovery efforts. Even though the ECC may take charge of the situation, the NMC will continue to monitor the circumstances and restore traffic as soon as damaged network elements are revitalized.

The telephone number for the BellSouth Network Management Center in Atlanta, as published in Telcordia’s National Network Management Directory, is 404-321-2516. The telephone number for KMC III’s Local Switch Control Center is [INSERT NUMBER].

3.0 IDENTIFYING THE PROBLEM

During the early stages of problem detection, the NMC will be able to tell which CLECs are affected by the catastrophe. Further analysis and/or first hand observation will determine if the disaster has affected CLEC equipment only, BellSouth equipment only or a combination. The initial restoration activity will be largely determined by the equipment that is affected.

Once the nature of the disaster is determined and after verifying the cause of the problem, the NMC will initiate reroutes and/or transfers that are jointly agreed upon by the affected CLECs' Network Management Center and the BellSouth NMC. The type and percentage of controls used will depend upon available network capacity. Controls necessary to stabilize the situation will be invoked and the NMC will attempt to re-establish as much traffic as possible.

For long-term outages, recovery efforts will be coordinated by the Emergency Control Center (ECC). Traffic controls will continue to be applied by the NMC until facilities are re-established. As equipment is made available for service, the ECC will instruct the NMC to begin removing the controls and allow traffic to resume.

3.1 SITE CONTROL

In the total loss of building use scenario, what likely exists will be a smoking pile of rubble. This rubble will contain many components that could be dangerous. It could also contain any personnel on the premises at the time of the disaster. For these reasons, the local fire marshal with the assistance of the police will control the site until the building is no longer a threat to surrounding properties and the companies have secured the site from the general public.

During this time, the majority owner of the building should be arranging for a demolition contractor to mobilize to the site with the primary objective of reaching the cable entrance facility for a damage assessment. The results of this assessment would then dictate immediate plans for restoration, both short term and permanent.

In a less catastrophic event, i.e., the building is still standing and the cable entrance facility is usable, the situation is more complex. The site will initially be controlled by local authorities until the threat to adjacent property has diminished. Once the site is returned to the control of the companies, the following events should occur.

An initial assessment of the main building infrastructure systems (mechanical, electrical, fire and life safety, elevators, and others) will establish building needs. Once these needs are determined, the majority owner should lead the building restoration efforts. There may be situations where the site will not be totally restored within the confines of the building. The companies must individually determine their needs and jointly assess the cost of permanent restoration to determine the overall plan of action.

Multiple restoration trailers from each company will result in the need for designated space and installation order. This layout and control is required to maximize the amount of restoration equipment that can be placed at the site, and the priority of placements.

Care must be taken in this planning to ensure other restoration efforts have logistical access to the building. Major components of telephone and building equipment will need to be removed and replaced. A priority for this equipment must also be jointly established to facilitate overall site restoration. (Example: If the AC switchgear has sustained damage, this would be of the highest priority in order to regain power, lighting, and HVAC throughout the building.)

If the site will not accommodate the required restoration equipment, the companies would then need to quickly arrange with local authorities for street closures, rights of way or other possible options available.

3.2 ENVIRONMENTAL CONCERNS

In the worse case scenario, many environmental concerns must be addressed. Along with the police and fire marshal, the state environmental protection department will be on site to monitor the situation.

Items to be concerned with in a large central office building could include:

1. Emergency engine fuel supply. Damage to the standby equipment and the fuel handling equipment could have created "spill" conditions that have to be handled within state and federal regulations.

2. Asbestos-containing materials that may be spread throughout the wreckage. Asbestos could be in many components of building, electrical, mechanical, outside plant distribution, and telephone systems.

3. Lead and acid. These materials could be present in potentially large quantities depending upon the extent of damage to the power room.

4. Mercury and other regulated compounds resident in telephone equipment.

5. Other compounds produced by the fire or heat.

Once a total loss event occurs at a large site, local authorities will control immediate clean up (water placed on the wreckage by the fire department) and site access.

At some point, the companies will become involved with local authorities in the overall planning associated with site clean up and restoration. Depending on the clean up approach taken, delays in the restoration of several hours to several days may occur.

In a less severe disaster, items listed above are more defined and can be addressed individually depending on the damage.

In each case, the majority owner should coordinate building and environmental restoration as well as maintain proper planning and site control.

4.0 THE EMERGENCY CONTROL CENTER (ECC)

The ECC is located in the Midtown 1 Building in Atlanta, Georgia. During an emergency, the ECC staff will convene a group of pre-selected experts to inventory the damage and initiate corrective actions. These experts have regional access to BellSouth's personnel and equipment and will assume control of the restoration activity anywhere in the nine-state area.

In the past, the ECC has been involved with restoration activities resulting from hurricanes, ice storms and floods. They have demonstrated their capabilities during these calamities as well as during outages caused by human error or equipment failures. This group has an excellent record of restoring service as quickly as possible.

During a major disaster, the ECC may move emergency equipment to the affected location, direct recovery efforts of local personnel and coordinate service restoration activities with the CLECs. The ECC will attempt to restore service as quickly as possible using whatever means is available, leaving permanent solutions, such as the replacement of damaged buildings or equipment, for local personnel to administer.

Part of the ECC's responsibility, after temporary equipment is in place, is to support the NMC efforts to return service to the CLECs. Once service has been restored, the ECC will return control of the network to normal operational organizations. Any long-term changes required after service is restored will be made in an orderly fashion and will be conducted as normal activity.

5.0 RECOVERY PROCEDURES

The nature and severity of any disaster will influence the recovery procedures. One crucial factor in determining how BellSouth will proceed with restoration is whether or not BellSouth's equipment is incapacitated. Regardless of whose equipment is out of service, BellSouth will move as quickly as possible to aid with service recovery; however, the approach that will be taken may differ depending upon the location of the problem.

5.1 CLEC OUTAGE

For a problem limited to one CLEC (or a building with multiple CLECs), BellSouth has several options available for restoring service quickly. For those CLECs that have agreements with other CLECs, BellSouth can immediately start directing traffic to a provisional CLEC for completion. This alternative is dependent upon BellSouth having concurrence from the affected CLECs.

Whether or not the affected CLECs have requested a traffic transfer to another CLEC will not impact BellSouth's resolve to re-establish traffic to the original destination as quickly as possible.

5.2 BELLSOUTH OUTAGE

Because BellSouth's equipment has varying degrees of impact on the service provided to the CLECs, restoring service from damaged BellSouth equipment is different. The outage will probably impact a number of Carriers simultaneously. However, the ECC will be able to initiate immediate actions to correct the problem.

A disaster involving any of BellSouth's equipment locations could impact the CLECs, some more than others. A disaster at a Central Office (CO) would only impact the delivery of traffic to and from that one location, but the incident could affect many Carriers. If the Central Office is a Serving Wire Center (SWC), then traffic from the entire area to those Carriers served from that switch would also be impacted. If the switch functions as an Access Tandem, or there is a tandem in the building, traffic from every CO to every CLEC could be interrupted. A disaster that destroys a facility hub could disrupt various traffic flows, even though the switching equipment may be unaffected.

The NMC would be the first group to observe a problem involving BellSouth's equipment. Shortly after a disaster, the NMC will begin applying controls and finding re-routes for the completion of as much traffic as possible. These reroutes may involve delivering traffic to alternate Carriers upon receiving approval from the CLECs involved. In some cases, changes in translations will be required. If the outage is caused by the destruction of equipment, then the ECC will assume control of the restoration.

5.2.1 Loss of a Central Office

When BellSouth loses a Central Office, the ECC will

a) Place specialists and emergency equipment on notice;

b) Inventory the damage to determine what equipment and/or functions are lost;

c) Move containerized emergency equipment and facility equipment to the stricken area, if necessary;

d) Begin reconnecting service on a parity basis for Hospitals, Police and other emergency agencies or customers served by BellSouth or CLEC in accordance with the TSP priority restoration coding scheme entered in the BellSouth Maintenance database immediately prior to the emergency;

e) Begin restoring service, on a parity basis, to other customers served by CLECs or BellSouth.

5.2.2 Loss of a Central Office with Serving Wire Center Functions

The loss of a Central Office that also serves as a Serving Wire Center (SWC) will be restored as described in Section 5.2.1.

5.2.3 Loss of a Central Office with Tandem Functions

When BellSouth loses a Central Office building that serves as an Access Tandem and as a SWC, the ECC will

a) Place specialists and emergency equipment on notice;

b) Inventory the damage to determine what equipment and/or functions are lost;

c) Move containerized emergency equipment and facility equipment to the stricken area, if necessary;

d) Begin reconnecting service on a parity basis for Hospitals, Police and other emergency agencies or customers served by BellSouth or CLEC in accordance with the TSP priority restoration coding scheme entered in the BellSouth Maintenance database immediately prior to the emergency;

e) Re-direct as much traffic as possible to the alternate access tandem (if available) for delivery to those CLECs utilizing a different location as a SWC;

f) Begin aggregating traffic to a location near the damaged building. From this location, begin re-establishing trunk groups to the CLECs for the delivery of traffic normally found on the direct trunk groups (This aggregation point may be the alternate access tandem location or another CO on a primary facility route.);

g) Begin restoring service, on a parity basis, to other customers served by CLECs or BellSouth.

5.2.4 Loss of a Facility Hub

In the event that BellSouth loses a facility hub, the recovery process is much the same as above. Once the NMC has observed the problem and administered the appropriate controls, the ECC will assume authority for the repairs. The recovery effort will include

a) Placing specialists and emergency equipment on notice;

b) Inventorying the damage to determine what equipment and/or functions are lost;

c) Moving containerized emergency equipment to the stricken area, if necessary;

d) Reconnecting service on a parity basis for Hospitals, Police and other emergency agencies or customers served by BellSouth or CLEC in accordance with the TSP priority restoration coding scheme entered in the BellSouth Maintenance database immediately prior to the emergency; and

e) If necessary, BellSouth will aggregate the traffic at another location and build temporary facilities. This alternative would be viable for a location that is destroyed and building repairs are required.

f) Begin restoring service, on a parity basis, to other customers served by CLECs or BellSouth.

5.3 COMBINED OUTAGE (CLEC AND BELLSOUTH EQUIPMENT)

In some instances, a disaster may impact BellSouth equipment as well as the CLEC equipment. This situation will be handled in much the same way as described in Section 5.2.3. Since BellSouth and the CLECs will be utilizing temporary equipment, close coordination will be required.

6.0 T1 IDENTIFICATION PROCEDURES

During the restoration of service after a disaster, BellSouth may be forced to aggregate traffic for delivery to a CLEC. During this process, T1 traffic may be consolidated onto DS3s and may become unidentifiable to the Carrier. Because resources will be limited, BellSouth may be forced to "package" this traffic entirely differently than normally received by the CLECs. Therefore, a method for identifying the T1 traffic on the DS3s and providing the information to the Carriers is required. If information to facilitate billing among Carriers needs to be established, the Parties shall negotiate in good faith a resolution of such identification, information and billing issues and

may use traffic figures averaged over the most recent three (3) month period as a proxy taking into account known or expected deviations during the recovery period.

7.0 ACRONYMS

CLEC	-	Competitive Local Exchange Carrier
CO	-	Central Office (BellSouth)
DS3	-	Facility that carries 28 T1s (672 circuits)
ECC	-	Emergency Control Center (BellSouth)
NMC	-	Network Management Center
SWC	-	Serving Wire Center (BellSouth switch)
T1	-	Facility that carries 24 circuits
TSP	-	Telecommunications Service Priority

8.0 Hurricane Information

During a hurricane, BellSouth will make every effort to keep CLECs updated on the status of our network. Information centers will be set up by BellSouth. These centers are not intended to be used for escalations, but rather to keep the CLEC informed of network related issues, area damages and dispatch conditions, etc.

Hurricane-related information will be regularly updated and can also be found on line at http://www.interconnection.bellsouth.com/network/disaster/dis_resp.htm. Information concerning Mechanized Disaster Reports can also be found at this website by clicking on CURRENT MDR REPORTS or by going directly to http://www.interconnection.bellsouth.com/network/disaster/mdrs.htm.

9.0 BST Disaster Management Plan

BellSouth maintenance centers have geographical and redundant communication capabilities. In the event of a disaster removing any maintenance center from service another geographical center would assume maintenance responsibilities. The contact numbers will not change and the transfer will be transparent to the CLEC.

Attachment 11

Bona Fide Request and New Business Request Process

BONA FIDE REQUEST AND NEW BUSINESS REQUEST PROCESS

1.0 BONA FIDE REQUEST

1.1 The Parties agree that KMC III is entitled to order any network element, interconnection option, or service option required to be made available by FCC or Commission requirements pursuant to the Act. A Bona Fide Request (BFR) is to be used when KMC III makes a request of BellSouth to provide a new or modified network element, interconnection option or other service option pursuant to the Act that was not previously provided for in this Agreement.

1.2 A BFR shall be submitted in writing by KMC III and shall specifically identify the requested service date, technical requirements, space requirements and/or such other specifications that clearly define the request such that BellSouth has sufficient information to analyze and prepare a response. Such a request shall also include KMC III's designation of the request as being pursuant to the Telecommunications Act of 1996 (*i.e.*, a BFR). The request shall be sent to KMC III's designated BellSouth sales contact or Local Contract Manager.

1.3 Within two (2) business days of receipt of a BFR, BellSouth shall acknowledge in writing its receipt and identify a single point of contact responsible for responding to the BFR and shall request any additional information needed to process the request to the extent known at that time. Notwithstanding the foregoing, BellSouth may reasonably request additional information from KMC III at any time during the processing of the BFR.

1.4 Within thirty (30) business days of BellSouth's receipt of the BFR, if preliminary analysis of the requested BFR is not of such complexity that it will cause BellSouth to expend extraordinary resources to evaluate the BFR, BellSouth shall respond to KMC III by providing a preliminary analysis of the new or modified network element or interconnection option not ordered by the FCC or Commission that is the subject of the BFR**.** The preliminary analysis shall either confirm that BellSouth will offer access to the new or modified network element, interconnection option or service option or confirm that BellSouth will not offer the new or modified network element, interconnection option or service option.

1.5 For any new or modified network element, interconnection option or service option not ordered by the FCC or Commission, if the preliminary analysis states that BellSouth will offer the new or modified network element, interconnection option or service option, the preliminary analysis

will include an estimate of the costs of utilizing existing resources, both personnel and systems, in the development including, but not limited to, request parameters analysis, determination of impacted BellSouth departments, determination of required resources, project management resources, etc. (Development Rate) including a general breakdown of such costs associated with the network element, interconnection option or service option and the date the request can be met. If the preliminary analysis states that BellSouth will not offer the new or modified network element, interconnection option or service option, BellSouth will provide an explanation of why the request is not technically feasible, does not qualify as a BFR for the new or modified network element, interconnection option or service option, should actually be submitted as a NBR or is otherwise not required to be provided under the Act. If BellSouth cannot provide the network element, interconnection option or service option by the requested date, BellSouth shall provide an alternative proposed date together with a detailed explanation as to why BellSouth is not able to meet KMC III's requested date.

1.6 For any new or modified network element, interconnection option or service option not ordered by the FCC or Commission, if BellSouth determines that the preliminary analysis of the requested BFR is of such complexity that it will cause BellSouth to expend extraordinary resources to evaluate the BFR, BellSouth shall notify KMC III within ten (10) business days of BellSouth's receipt of BFR that a fee will be required prior to the preliminary evaluation of the BFR. Such fee shall be limited to BellSouth's extraordinary expenses directly related to the complex request that require the allocation and engagement of additional resources above the existing allocated resources used on BFR/NBR cost development which include, but are not limited to, expenditure of funds to develop feasibility studies, specific resources that are required to determine request requirements (such as operation support system analysts, technical managers, software developers), software impact analysis by specific software developers; software architecture development, hardware impact analysis by specific system analysts, etc. and the request for such fee shall be accompanied with a general breakdown of such costs. If KMC III accepts the complex request evaluation fee proposed by BellSouth, KMC III shall submit such fee within thirty (30) business days of BellSouth's notice that a complex request evaluation fee is required. Within thirty (30) business days of BellSouth's receipt of the complex request evaluation fee, BellSouth shall respond to KMC III by providing a preliminary analysis, consistent with Section 1.4 of this Attachment 11.

1.7 KMC III may cancel a BFR at any time. If KMC III cancels the request within ten (10) business days after submitting the BFR request, no charges will be incurred. If KMC III cancels the BFR within thirty (30) business

days after receipt of BellSouth's preliminary analysis, BellSouth shall be entitled to keep any complex request evaluation fee submitted in accordance with Section 1.6 above, minus those costs included in the fee that have not been incurred as of the date of cancellation.

1.8 KMC III will have thirty (30) business days from receipt of preliminary analysis to accept the preliminary analysis or cancel the BFR. If KMC III fails to respond within this thirty (30) business day period, the BFR will be deemed cancelled.

1.8.1 Acceptance of the preliminary analysis must be in writing and accompanied by the estimated Development Rate for the new or modified network element, interconnection option or service option quoted in the preliminary analysis**.**

1.9 Notwithstanding any other provision of this Agreement, BellSouth shall propose a firm price quote, including the firm Development Rate**,** the firm nonrecurring rate and the firm recurring rate, and a detailed implementation plan within ten (10) business days of receipt of KMC III's accurate BFR application for a network element, interconnection option or service option that is operational at the time of the request; thirty (30) business days of receipt of KMC III's accurate BFR application for a new or modified network element, interconnection option or service option ordered by the FCC or Commission; and within sixty (60) business days of receipt of KMC III's accurate BFR application for a new or modified network element, interconnection option or service option not ordered by the FCC or Commission or not operational at the time of the request. The firm nonrecurring rate will not include any of the Development Rate or the complex request evaluation fee, if required, in the calculation of this rate. Such firm price quote shall not exceed the estimate provided with the preliminary analysis by more than 25%.

1.10 KMC III shall have thirty (30) business days from receipt of the firm price quote to accept or deny the firm price quote and submit any additional Development or nonrecurring rates quoted in the firm price quote. If the firm price quote is less than the preliminary analysis' estimated Development Rate and/or nonrecurring rate for the new or modified network element, interconnection option or service option not ordered by the FCC or Commission, BellSouth will credit KMC III's account for the difference**.**

1.11 Unless KMC III agrees otherwise, all prices shall be consistent with the applicable pricing principles and provisions of the Act and rules, orders and regulations of the FCC and/or the Commission.

1.12 If KMC III believes that BellSouth's firm price quote is not consistent with the requirements of the Act, either Party may seek dispute resolution in accordance with the dispute resolution provisions set forth in the General Terms and Conditions of this Agreement. Any such arbitration applicable to network element, interconnection option and/or service option pricing shall be conducted in accordance with standards prescribed in Sections 251 and 252 of the Act. While the dispute is pending, KMC III shall have the option of requesting BellSouth to provide the network element, interconnection option or service option subject to a retroactive pricing true up upon an effective Commission order resolving the dispute. The Parties agree that subsequent true-ups may result from multiple rounds of appellate or reconsideration decisions, should the relevant Party pursue such appeals/reconsiderations/review and prevail. BellSouth will provide a cost study upon request after the firm quote.

1.13 If either Party believes that the other is not acting in good faith in requesting, negotiating, processing or implementing the BFR, either Party may seek to resolve the dispute pursuant to the dispute resolution provisions set forth in the General Terms and Conditions of this Agreement.

1.14 Upon agreement to the rates, terms and conditions of a BFR, the Parties shall negotiate in good faith an amendment to this Agreement.

2.0 **NEW BUSINESS REQUEST**

2.1 KMC III also shall be permitted to request the development of new or revised facilities or service options which may not be required by the Act. Procedures applicable to requesting the addition of such elements, services and options are specified in this Attachment 11. A New Business Request (NBR) is to be used by KMC III to make a request of BellSouth for a new or modified feature or capability of an existing product or service, a new product or service that is not deployed within the BellSouth network or operations and business support systems, or a new or modified service option that was not previously included in this Agreement (Requested NBR Services) and is not required by the Act.

2.2 An NBR shall be submitted in writing by KMC III and shall specifically identify the requested service date, technical requirements, space requirements and/or such specifications that clearly define the request such that BellSouth has sufficient information to analyze and prepare a response. The request shall be sent to KMC III's designated BellSouth sales contact or Local Contract Manager.

2.3 Within two (2) business days of receipt of an NBR, BellSouth shall acknowledge in writing its receipt and identify a single point of contact

responsible for responding to the NBR And shall request any additional information needed to process the request to the extent known at that time. Notwithstanding the foregoing, BellSouth may reasonably request additional information from KMC III at any time during the processing of the NBR.

2.4 If the preliminary analysis of the requested NBR is not of such complexity that it will cause BellSouth to expend extraordinary resources to evaluate the NBR, within thirty (30) business days of its receipt of the NBR, BellSouth shall respond to KMC III by providing a preliminary analysis of such Requested NBR Services that are the subject of the NBR. The preliminary analysis shall either confirm that BellSouth will offer access to the Requested NBR Services or confirm that BellSouth will not offer the Requested NBR Services.

2.4.1 If the preliminary analysis states that BellSouth will offer the Requested NBR Services, the preliminary analysis will include an estimate of the Development Rate including a general breakdown of costs and the date the request can be met. If BellSouth cannot provide the Requested NBR Service by the requested date, it shall provide an alternative proposed date together with a detailed explanation as to why BellSouth is not able to meet KMC III's requested date. If the preliminary analysis states that BellSouth will not offer the Requested NBR Services, BellSouth will provide an explanation of why the request is not technically feasible, does not qualify as an NBR for the Requested NBR Services.

2.5 If BellSouth determines that the preliminary analysis of the requested NBR is of such complexity that it will cause BellSouth to expend extraordinary resources to evaluate the NBR, BellSouth shall notify KMC III within ten (10) business days of BellSouth's receipt of the NBR that a complex request evaluation fee will be required prior to the evaluation of the NBR. Such fee shall be limited to BellSouth's extraordinary expenses directly related to the complex request. If KMC III accepts the complex request evaluation fee amount proposed by BellSouth, KMC III shall submit such complex request evaluation fee within thirty (30) business days of BellSouth's notice that a complex request evaluation fee is required.

2.6 Within thirty (30) business days of BellSouth's receipt of the complex request evaluation fee, BellSouth shall respond to KMC III by providing a preliminary analysis of such Requested NBR Services that are the subject of the NBR.

2.7 KMC III may cancel an NBR at any time. If KMC III cancels the NBR within ten (10) business days after submitting the NBR, no charges will be incurred. If KMC III cancels the NBR within thirty (30) business days

after receipt of BellSouth's preliminary analysis, BellSouth shall be entitled to keep any complex request evaluation fee submitted in accordance with Section 2.6, minus those costs included in the fee that have not been incurred as of the date of cancellation.

2.8 KMC III will have thirty (30) business days from receipt of preliminary analysis to accept the preliminary analysis or cancel the NBR. If KMC III fails to respond within this thirty (30) business day period, the NBR will be deemed cancelled.

2.8.1 Acceptance of the preliminary analysis must be in writing and accompanied by the estimated Development Rate for the Requested NBR Services quoted in the preliminary analysis.

2.9 BellSouth shall propose a firm price quote including the firm Development Rate, the firm nonrecurring rate, and the firm recurring rate and a detailed implementation plan within ten (10) business days of receipt of KMC III's accurate NBR application for a Requested NBR Service that is operational at the time of the request and within sixty (60) business days of receipt of KMC III's accurate NBR application for the Requested NBR Services not operational at the time of the request. The firm nonrecurring rate will not include any of the Development Rate or the complex request evaluation fee, if required, in the calculation of this rate. Such firm price quote shall not exceed the estimate provided with the preliminary analysis by more than 25%.

2.10 KMC III shall have thirty (30) business days from receipt of firm price quote to accept or deny the firm price quote and submit any additional nonrecurring, non-refundable fees quoted in the firm price quote. If the firm price quote is less than the preliminary analysis' estimate of the Development Rate, BellSouth will credit KMC III's account for the difference.

2.11 Unless KMC III agrees otherwise, all prices shall be consistent with the applicable pricing principles and provisions of the Act and rules, orders and regulations of the FCC and/or the Commission.

2.12 If either Party believes that the other is not acting in good faith in requesting, negotiating, processing or implementing the NBR, either Party may seek to resolve the dispute pursuant to the dispute resolution provisions set forth in the General Terms and Conditions of this Agreement.

2.13 Upon agreement to the rates, terms and conditions of a NBR, an amendment to this Agreement, or a separate agreement, may be required

and the Parties shall negotiate such agreement or amendment in good faith.