BELLSOUTH® / CLEC Agreement

Customer Name: Access Point, Inc.

Access Point, Inc. Interconnection Agreement 06	3
Table of Contents	4
General Term and Conditions	6
Signature Page	26
Att 1 - Resale	27
Att 1- Resale Discounts & Rates	47
Att 2 Network Elements & Other Servies	56
Att 2- Exhibit 1, FL COL Language	97
Att 2- Exhibit 2, NC COL Language	119
Att 2- Exhibit 3, SC COL Language	143
Att 2- Exhibit 4, GA COL Language	168
Att 2 - Exhibit 4 - GA COL 271 Rates	198
Att 2- Exhibit 5, AL COL Language	199
Att 2- Network Element Rates - Exh A	226
Att 2 - Network Element Rates, Exh B - NC Rates Applicable to Embedded Base Services As of 3-10-05	327
Attachment 2 - Exhibit C	345
Att 3 - Network Interconnection	349
Att 3- Network Element Rates	379
Att 4 - Collocation	397
Att 4- Collocation Rates- Exhibit B	449
Att 5 - Access to Numbers and Number Portability	495
Att 6 - Ordering	501
Att 7- Billing	510
Att 7- CMDS Rates	523
Att 8 - Rights of Way	532
Att 9 - Perf Meas Intro	534
Att 10 - Disaster Recovery Plan	536

Note: This page is not part of the actual signed contract/amendment, but is present for record keeping purposes only.

Note: This page is not part of the actual signed contract/amendment, but is present for record keeping purposes only.

Interconnection Agreement

Between

BellSouth Telecommunications, Inc.

and

Access Point, Inc.

TABLE OF CONTENTS

General Terms and Conditions

Definitions

1. CLEC Certification

2. Term of the Agreement

3. Nondiscriminatory Access .

4. Court Ordered Requests for Call Detail Records and Other Subscriber Information

5. Liability and Indemnification

6. Intellectual Property Rights and Indemnification

7. Proprietary and Confidential Information

8. Resolution of Disputes

9. Taxes

10. Force Majeure

11. Adoption of Agreements

12. Modification of Agreement

13. Legal Rights

14. Indivisibility

15. Severability

16. Non-Waivers

17. Governing Law

18. Assignments and Transfers

19. Notices

20. Rule of Construction

21. Headings of No Force or Effect

22. Multiple Counterparts

23. Filing of Agreement

24. Compliance with Law

25. Necessary Approvals

26. Good Faith Performance

27. Rates

28. Rate True-Up

29. Survival

30. Entire Agreement

TABLE OF CONTENTS (cont'd)

Attachment 1 - Resale

Attachment 2 - Network Elements and Other Services

Attachment 3 - Network Interconnection

Attachment 4 - Collocation

Attachment 5 - Access to Numbers and Number Portability

Attachment 6 – Pre-Ordering, Ordering, Provisioning and Maintenance and Repair

Attachment 7 - Billing

Attachment 8 - Rights-of-Way, Conduits and Pole Attachments

Attachment 9 - Performance Measurements

Attachment 10- BellSouth Disaster Recovery Plan

Attachment 11–Bona Fide Request and New Business Request Process

AGREEMENT
GENERAL TERMS AND CONDITIONS

THIS AGREEMENT is made by and between BellSouth Telecommunications, Inc., (BellSouth), a Georgia corporation, and Access Point, Inc. (Access Point), a North Carolina corporation, and shall be effective on the Effective Date, as defined herein. This Agreement may refer to either BellSouth or Access Point or both as a "Party" or "Parties."

W I T N E S S E T H

WHEREAS, BellSouth is a local exchange telecommunications company authorized to provide Telecommunications Services (as defined below) in the states of Alabama, Florida, Georgia, Kentucky, Louisiana, Mississippi, North Carolina, South Carolina and Tennessee; and

WHEREAS, Access Point is or seeks to become a CLEC authorized to provide telecommunications services in the states of Alabama, Florida, Georgia, Kentucky, Louisiana, Mississippi, North Carolina, South Carolina, and Tennessee; and

WHEREAS, pursuant to Sections 251 and 252 of the Act; Access Point wishes to purchase certain services from BellSouth; and

WHEREAS, Parties wish to interconnect their facilities, exchange traffic, and perform Local Number Portability (LNP) pursuant to Sections 251 and 252 of the Act as set forth herein; and

NOW THEREFORE, in consideration of the mutual agreements contained herein, BellSouth and Access Point agree as follows:

Definitions

Affiliate is defined as a person that (directly or indirectly) owns or controls, is owned or controlled by, or is under common ownership or control with, another person. For purposes of this paragraph, the term "own" means to own an equity interest (or equivalent thereof) of more than ten percent (10%).

Commission is defined as the appropriate regulatory agency in each state of BellSouth's nine-state region (Alabama, Florida, Georgia, Kentucky, Louisiana, Mississippi, North Carolina, South Carolina, and Tennessee).

Competitive Local Exchange Carrier (CLEC) means a telephone company certificated by the Commission to provide local exchange service within BellSouth's franchised area.

Effective Date is defined as the date that the Agreement is effective for purposes of rates, terms and conditions and shall be thirty (30) days after the date of the last signature executing the Agreement. Future amendments for rate changes will also be effective thirty (30) days after the date of the last signature executing the amendment.

FCC means the Federal Communications Commission.

Telecommunications means the transmission, between or among points specified by the user, of information of the user's choosing, without change in the form or content of the information as sent and received.

Telecommunications Service means the offering of telecommunications for a fee directly to the public, or to such classes of users as to be effectively available directly to the public, regardless of the facilities used.

Telecommunications Act of 1996 (Act) means Public Law 104-104 of the United States Congress effective February 8, 1996. The Act amended the Communications Act of 1934 (47 U.S.C. Section 1 et. seq.).

1. CLEC Certification

1.1 Access Point agrees to provide BellSouth in writing Access Point's CLEC certification from the Commission for all states covered by this Agreement except Kentucky prior to BellSouth filing this Agreement with the appropriate Commission for approval. Additionally, Access Point shall provide to BellSouth an effective certification to do business issued by the secretary of state or equivalent authority in each state covered by this Agreement.

1.2 To the extent Access Point is not certified as a CLEC in each state covered by this Agreement as of the execution hereof, Access Point may not purchase services hereunder in that state. Access Point will notify BellSouth in writing and provide CLEC certification from the Commission when it becomes certified to operate in, as well as an effective certification to do business issued by the secretary of state or equivalent authority for, any other state covered by this Agreement. Upon receipt thereof, BellSouth will file this Agreement in that state, and Access Point may purchase services pursuant to this Agreement in that state, subject to establishing appropriate accounts in the additional state as described in Attachment 7.

1.3 Should Access Point's certification in any state be rescinded or otherwise terminated, BellSouth may, at its election, suspend or terminate this Agreement immediately and all monies owed on all outstanding invoices for services provided in that state shall become due, or BellSouth may refuse to provide services hereunder in that state until certification is reinstated in that state, provided such

notification is made prior to expiration of the term of this Agreement. Access Point shall provide an effective certification to do business issued by the secretary of state or equivalent authority in each state covered by this Agreement.

2. Term of the Agreement

2.1 The initial term of this Agreement shall be three (3) years, beginning on the Effective Date and shall apply to the BellSouth territory in the state(s) of Alabama, Florida, Georgia, Kentucky, Louisiana, Mississippi, North Carolina, South Carolina and Tennessee. Notwithstanding any prior agreement of the Parties, the rates, terms and conditions of this Agreement shall not be applied retroactively prior to the Effective Date.

2.2 The Parties agree that by no earlier than two hundred seventy (270) days and no later than one hundred and eighty (180) days prior to the expiration of the initial term of this Agreement, they shall commence negotiations for a new agreement to be effective beginning on the expiration date of this Agreement (Subsequent Agreement). If as of the expiration of the initial term of this Agreement, a Subsequent Agreement has not been executed by the Parties, then except as set forth in Sections 2.3.1 and 2.3.2 below, this Agreement shall continue on a month-to-month basis while a Subsequent Agreement is being negotiated. The Parties' rights and obligations with respect to this Agreement after expiration of the initial term shall be as set forth in Section 2.3 below.

2.3 If, within one hundred and thirty-five (135) days of commencing the negotiation referred to in Section 2.2 above, the Parties are unable to negotiate new terms, conditions and prices for a Subsequent Agreement, either Party may petition the Commission to establish appropriate rates, terms and conditions for the Subsequent Agreement pursuant to 47 U.S.C. § 252.

2.3.1 Access Point may request termination of this Agreement only if it is no longer purchasing services pursuant to this Agreement. Except as set forth in Section 2.3.2 below, notwithstanding the foregoing, in the event that as of the date of expiration of the initial term of this Agreement and conversion of this Agreement to a month-to-month term, the Parties have not entered into a Subsequent Agreement and no arbitration proceeding has been filed in accordance with Section 2.3 above, then BellSouth may terminate this Agreement upon sixty (60) days notice to Access Point. In the event that BellSouth terminates this Agreement as provided above, BellSouth shall continue to offer services to Access Point pursuant to the rates, terms and conditions set forth in BellSouth's then current standard interconnection agreement. In the event that BellSouth's standard interconnection agreement becomes effective between the Parties, the Parties may continue to negotiate a Subsequent Agreement.

2.3.2 Notwithstanding Section 2.2 above, in the event that as of the expiration of the initial term of this Agreement the Parties have not entered into a Subsequent Agreement and no arbitration proceeding has been filed in accordance with Section

2.3 above and BellSouth is not providing any services under this Agreement as of the date of expiration of the initial term of this Agreement, then this Agreement shall not continue on a month-to-month basis but shall be deemed terminated as of the expiration date hereof.

2.4 If, at any time during the term of this Agreement, BellSouth is unable to contact Access Point pursuant to the Notices provision hereof or any other contact information provided by Access Point under this Agreement, and there are no active services being provisioned under this Agreement, then BellSouth may, at its discretion, terminate this Agreement, without any liability whatsoever, upon sending of notification to Access Point pursuant to the Notices section hereof.

2.5 In addition to as otherwise set forth in this Agreement, BellSouth reserves the right to suspend access to ordering systems, refuse to process additional or pending applications for service, or terminate service in the event of prohibited, unlawful or improper use of BellSouth's facilities or service, abuse of BellSouth's facilities or any other material breach of this Agreement, and all monies owed on all outstanding invoices shall become due. In such event, Access Point is solely responsible for notifying its customers of any discontinuance of service.

3. Nondiscriminatory Access

When Access Point purchases Telecommunications Services from BellSouth pursuant to Attachment 1 of this Agreement for the purposes of resale to customers, such services shall be equal in quality, subject to the same conditions, and provided within the same provisioning time intervals that BellSouth provides to others, including its customers. To the extent technically feasible, the quality of a Network Element, as well as the quality of the access to such Network Element provided by BellSouth to Access Point shall be at least equal to that which BellSouth provides to itself and shall be the same for all Telecommunications carriers requesting access to that Network Element. The quality of the interconnection between the network of BellSouth and the network of Access Point shall be at a level that is equal to that which BellSouth provides itself, a subsidiary, an Affiliate, or any other party. The interconnection facilities shall be designed to meet the same technical criteria and service standards that are used within BellSouth's network and shall extend to a consideration of service quality as perceived by BellSouth's customers and service quality as perceived by Access Point.

4 Court Ordered Requests for Call Detail Records and Other Subscriber Information

4.1 Subpoenas Directed to BellSouth. Where BellSouth provides resold services for Access Point, or, if applicable under this Agreement, switching, BellSouth shall respond to subpoenas and court ordered requests delivered directly to BellSouth for the purpose of providing call detail records when the targeted telephone numbers belong to Access Point customers. Billing for such requests will be generated by BellSouth and directed to the law enforcement agency initiating the

request. BellSouth shall maintain such information for Access Point customers for the same length of time it maintains such information for its own customers.

4.2 Subpoenas Directed to Access Point. Where BellSouth is providing resold services to Access Point, or, if applicable under this Agreement, switching, then Access Point agrees that in those cases where Access Point receives subpoenas or court ordered requests regarding targeted telephone numbers belonging to Access Point customers, and where Access Point does not have the requested information, Access Point will advise the law enforcement agency initiating the request to redirect the subpoena or court ordered request to BellSouth for handling in accordance with Section 4.1 above.

4.3 In all other instances, where either Party receives a request for information involving the other Party's customer, the Party receiving the request will advise the law enforcement agency initiating the request to redirect such request to the other Party.

5 Liability and Indemnification

5.1 Access Point Liability. In the event that Access Point consists of two (2) or more separate entities as set forth in this Agreement and/or any Amendments hereto, or any third party places orders under this Agreement using Access Point's company codes or identifiers, all such entities shall be jointly and severally liable for the obligations of Access Point under this Agreement.

5.2 Liability for Acts or Omissions of Third Parties. BellSouth shall not be liable to Access Point for any act or omission of another entity providing any services to Access Point.

5.3 Except for any indemnification obligations of the Parties hereunder, each Party's liability to the other for any loss, cost, claim, injury, liability or expense, including reasonable attorneys' fees relating to or arising out of any cause whatsoever, whether based in contract, negligence or other tort, strict liability or otherwise, relating to the performance of this Agreement, shall not exceed a credit for the actual cost of the services or functions not performed or improperly performed. Any amounts paid to Access Point pursuant to Attachment 9 hereof shall be credited against any damages otherwise payable to Access Point pursuant to this Agreement.

5.3.1 Limitations in Tariffs. A Party may, in its sole discretion, provide in its tariffs and contracts with its customers and third parties that relate to any service, product or function provided or contemplated under this Agreement, that to the maximum extent permitted by Applicable Law, such Party shall not be liable to the customer or third party for (i) any loss relating to or arising out of this Agreement, whether in contract, tort or otherwise, that exceeds the amount such Party would have charged that applicable person for the service, product or function that gave rise to such loss and (ii) consequential damages. To the extent that a Party elects not to

place in its tariffs or contracts such limitations of liability, and the other Party incurs a loss as a result thereof, such Party shall, except to the extent caused by the other Party's gross negligence or willful misconduct, indemnify and reimburse the other Party for that portion of the loss that would have been limited had the first Party included in its tariffs and contracts the limitations of liability that such other Party included in its own tariffs at the time of such loss.

5.3.2 Neither BellSouth nor Access Point shall be liable for damages to the other Party's terminal location, equipment or customer premises resulting from the furnishing of a service, including, but not limited to, the installation and removal of equipment or associated wiring, except to the extent caused by a Party's negligence or willful misconduct or by a Party's failure to ground properly a local loop after disconnection.

5.3.3 Under no circumstance shall a Party be responsible or liable for indirect, incidental, or consequential damages, including, but not limited to, economic loss or lost business or profits, damages arising from the use or performance of equipment or software, or the loss of use of software or equipment, or accessories attached thereto, delay, error, or loss of data. In connection with this limitation of liability, each Party recognizes that the other Party may, from time to time, provide advice, make recommendations, or supply other analyses related to the services or facilities described in this Agreement, and, while each Party shall use diligent efforts in this regard, the Parties acknowledge and agree that this limitation of liability shall apply to provision of such advice, recommendations, and analyses.

5.3.4 To the extent any specific provision of this Agreement purports to impose liability, or limitation of liability, on either Party different from or in conflict with the liability or limitation of liability set forth in this Section, then with respect to any facts or circumstances covered by such specific provisions, the liability or limitation of liability contained in such specific provision shall apply.

5.4 Indemnification for Certain Claims. Except to the extent caused by the indemnified Party's gross negligence or willful misconduct, the Party providing services hereunder, its Affiliates and its parent company, shall be indemnified, defended and held harmless by the Party receiving services hereunder against any claim, loss or damage arising from the receiving Party's use of the services provided under this Agreement pertaining to (1) claims for libel, slander or invasion of privacy arising from the content of the receiving Party's own communications, or (2) any claim, loss or damage claimed by the customer of the Party receiving services arising from such company's use or reliance on the providing Party's services, actions, duties, or obligations arising out of this Agreement.

5.5 Disclaimer. EXCEPT AS SPECIFICALLY PROVIDED TO THE CONTRARY IN THIS AGREEMENT, NEITHER PARTY MAKES ANY REPRESENTATIONS OR WARRANTIES TO THE OTHER PARTY CONCERNING THE SPECIFIC QUALITY OF ANY SERVICES, OR

FACILITIES PROVIDED UNDER THIS AGREEMENT. THE PARTIES DISCLAIM, WITHOUT LIMITATION, ANY WARRANTY OR GUARANTEE OF MERCHANTABILITY OR FITNESS FOR A PARTICULAR PURPOSE, ARISING FROM COURSE OF PERFORMANCE, COURSE OF DEALING, OR FROM USAGES OF TRADE.

6 Intellectual Property Rights and Indemnification

6.1 No License. Except as expressly set forth in Section 6.2 below, no patent, copyright, trademark or other proprietary right is licensed, granted or otherwise transferred by this Agreement. The Parties are strictly prohibited from any use, including but not limited to, in the selling, marketing, promoting or advertising of telecommunications services, of any name, service mark, logo or trademark (collectively, the "Marks") of the other Party. The Marks include those Marks owned directly by a Party or its Affiliate(s) and those Marks that a Party has a legal and valid license to use. The Parties acknowledge that they are separate and distinct and that each provides a separate and distinct service and agree that neither Party may, expressly or impliedly, state, advertise or market that it is or offers the same service as the other Party or engage in any other activity that may result in a likelihood of confusion between its own service and the service of the other Party.

6.2 Ownership of Intellectual Property. Any intellectual property that originates from or is developed by a Party shall remain the exclusive property of that Party. Except for a limited, non-assignable, non-exclusive, non-transferable license to use patents or copyrights to the extent necessary for the Parties to use any facilities or equipment (including software) or to receive any service solely as provided under this Agreement, no license in patent, copyright, trademark or trade secret, or other proprietary or intellectual property right, now or hereafter owned, controlled or licensable by a Party, is granted to the other Party. Neither shall it be implied nor arise by estoppel. Any trademark, copyright or other proprietary notices appearing in association with the use of any facilities or equipment (including software) shall remain on the documentation, material, product, service, equipment or software. It is the responsibility of each Party to ensure at no additional cost to the other Party that it has obtained any necessary licenses in relation to intellectual property of third Parties used in its network that may be required to enable the other Party to use any facilities or equipment (including software), to receive any service, or to perform its respective obligations under this Agreement.

6.3 Intellectual Property Remedies

6.3.1 Indemnification. The Party providing a service pursuant to this Agreement will defend the Party receiving such service or data provided as a result of such service against claims of infringement arising solely from the use by the receiving Party of such service in the manner contemplated under this Agreement and will indemnify the receiving Party for any damages awarded based solely on such claims in accordance with Section 5 above.

6.3.2 Claim of Infringement

6.3.2.1 In the event that use of any facilities or equipment (including software), becomes, or in the reasonable judgment of the Party who owns the affected network is likely to become, the subject of a claim, action, suit, or proceeding based on intellectual property infringement, then said Party, promptly and at its sole expense and sole option, but subject to the limitations of liability set forth below, shall:

6.3.2.2 modify or replace the applicable facilities or equipment (including software) while maintaining form and function, or

6.3.2.3 obtain a license sufficient to allow such use to continue.

6.3.2.4 In the event Sections 6.3.2.2 or 6.3.2.3 above are commercially unreasonable, then said Party may terminate, upon reasonable notice, this contract with respect to use of, or services provided through use of, the affected facilities or equipment (including software), but solely to the extent required to avoid the infringement claim.

6.3.3 Exception to Obligations. Neither Party's obligations under this Section shall apply to the extent the infringement is caused by: (i) modification of the facilities or equipment (including software) by the indemnitee; (ii) use by the indemnitee of the facilities or equipment (including software) in combination with equipment or facilities (including software) not provided or authorized by the indemnitor, provided the facilities or equipment (including software) would not be infringing if used alone; (iii) conformance to specifications of the indemnitee which would necessarily result in infringement; or (iv) continued use by the indemnitee of the affected facilities or equipment (including software) after being placed on notice to discontinue use as set forth herein.

6.3.4 Exclusive Remedy. The foregoing shall constitute the Parties' sole and exclusive remedies and obligations with respect to a third party claim of intellectual property infringement arising out of the conduct of business under this Agreement.

6.3.5 Dispute Resolution. Any claim arising under Sections 6.1 and 6.2 above shall be excluded from the dispute resolution procedures set forth in Section 8 below and shall be brought in a court of competent jurisdiction.

7 Proprietary and Confidential Information

7.1 Proprietary and Confidential Information. It may be necessary for BellSouth and Access Point, each as the “Discloser,” to provide to the other Party, as “Recipient,” certain proprietary and confidential information (including trade secret information) including but not limited to technical, financial, marketing, staffing and business plans and information, strategic information, proposals, request for proposals, specifications, drawings, maps, prices, costs, costing methodologies, procedures, processes, business systems, software programs, techniques, customer

account data, call detail records and like information (collectively the "Information"). All such Information conveyed in writing or other tangible form shall be clearly marked with a confidential or proprietary legend. Information conveyed orally by the Discloser to Recipient shall be designated as proprietary and confidential at the time of such oral conveyance, shall be reduced to writing by the Discloser within forty-five (45) days thereafter, and shall be clearly marked with a confidential or proprietary legend.

7.2 Use and Protection of Information. Recipient agrees to protect such Information of the Discloser provided to Recipient from whatever source from distribution, disclosure or dissemination to anyone except employees of Recipient with a need to know such Information solely in conjunction with Recipient's analysis of the Information and for no other purpose except as authorized herein or as otherwise authorized in writing by the Discloser. Recipient will not make any copies of the Information inspected by it.

7.3 Exceptions

7.3.1 Recipient will not have an obligation to protect any portion of the Information which:

7.3.2 (a) is made publicly available by the Discloser or lawfully by a nonparty to this Agreement; (b) is lawfully obtained by Recipient from any source other than Discloser; (c) is previously known to Recipient without an obligation to keep it confidential; or (d) is released from the terms of this Agreement by Discloser upon written notice to Recipient.

7.4 Recipient agrees to use the Information solely for the purposes of negotiations pursuant to 47 U.S.C. § 251 or in performing its obligations under this Agreement and for no other entity or purpose, except as may be otherwise agreed to in writing by the Parties. Nothing herein shall prohibit Recipient from providing information requested by the FCC or a state regulatory agency with jurisdiction over this matter, or to support a request for arbitration or an allegation of failure to negotiate in good faith.

7.5 Recipient agrees not to publish or use the Information for any advertising, sales or marketing promotions, press releases, or publicity matters that refer either directly or indirectly to the Information or to the Discloser or any of its affiliated companies.

7.6 The disclosure of Information neither grants nor implies any license to the Recipient under any trademark, patent, copyright, application or other intellectual property right that is now or may hereafter be owned by the Discloser.

7.7 Survival of Confidentiality Obligations. The Parties' rights and obligations under this Section 7 shall survive and continue in effect until two (2) years after the expiration or termination date of this Agreement with regard to all Information

exchanged during the term of this Agreement. Thereafter, the Parties' rights and obligations hereunder survive and continue in effect with respect to any Information that is a trade secret under applicable law.

8 Resolution of Disputes

Except as otherwise stated in this Agreement, if any dispute arises as to the interpretation of any provision of this Agreement or as to the proper implementation of this Agreement, the aggrieved Party, if it elects to pursue resolution of the dispute, shall petition the Commission for a resolution of the dispute. However, each Party reserves any rights it may have to seek judicial review of any ruling made by the Commission concerning this Agreement.

9 Taxes

9.1 Definition. For purposes of this Section, the terms "taxes" and "fees" shall include but not be limited to federal, state or local sales, use, excise, gross receipts or other taxes or tax-like fees of whatever nature and however designated (including tariff surcharges and any fees, charges or other payments, contractual or otherwise, for the use of public streets or rights of way, whether designated as franchise fees or otherwise) imposed, or sought to be imposed, on or with respect to the services furnished hereunder or measured by the charges or payments therefore, excluding any taxes levied on income.

9.2 Taxes and Fees Imposed Directly On Either Providing Party or Purchasing Party

9.2.1 Taxes and fees imposed on the providing Party, which are not permitted or required to be passed on by the providing Party to its customer, shall be borne and paid by the providing Party.

9.2.2 Taxes and fees imposed on the purchasing Party, which are not required to be collected and/or remitted by the providing Party, shall be borne and paid by the purchasing Party.

9.3 Taxes and Fees Imposed on Purchasing Party But Collected And Remitted By Providing Party

9.3.1 Taxes and fees imposed on the purchasing Party shall be borne by the purchasing Party, even if the obligation to collect and/or remit such taxes or fees is placed on the providing Party.

9.3.2 To the extent permitted by applicable law, any such taxes and/or fees shall be shown on applicable billing documents between the Parties. Notwithstanding the foregoing, the purchasing Party shall remain liable for any such taxes and fees regardless of whether they are actually billed by the providing Party at the time that the respective service is billed.

9.3.3 If the purchasing Party determines that in its opinion any such taxes or fees are not applicable, the providing Party shall not bill such taxes or fees to the purchasing Party if the purchasing Party provides written certification, reasonably satisfactory to the providing Party, stating that it is exempt or otherwise not subject to the tax or fee, setting forth the basis therefor, and satisfying any other requirements under applicable law. If any authority seeks to collect any such tax or fee that the purchasing Party has determined and certified not to be applicable, or any such tax or fee that was not billed by the providing Party, the purchasing Party may contest the same in good faith, at its own expense. In any such contest, the purchasing Party shall promptly furnish the providing Party with copies of all filings in any proceeding, protest, or legal challenge, all rulings issued in connection therewith, and all correspondence between the purchasing Party and the taxing authority.

9.3.4 In the event that all or any portion of an amount sought to be collected must be paid in order to contest the imposition of any such tax or fee, or to avoid the existence of a lien on the assets of the providing Party during the pendency of such contest, the purchasing Party shall be responsible for such payment and shall be entitled to the benefit of any refund or recovery. The purchasing Party shall have the right to contest, at its own expense, any such tax or fee that it believes is not applicable or was paid by it in error. If requested in writing by the purchasing Party, the providing Party shall facilitate such contest either by assigning to the purchasing Party its right to claim a refund of such tax or fee, if such an assignment is permitted under applicable law, or, if an assignment is not permitted, by filing and pursuing a claim for refund on behalf of the purchasing Party but at the purchasing Party's expense.

9.3.5 If it is ultimately determined that any additional amount of such a tax or fee is due to the imposing authority, the purchasing Party shall pay such additional amount, including any interest and penalties thereon.

9.3.6 Notwithstanding any provision to the contrary, the purchasing Party shall protect, indemnify and hold harmless (and defend at the purchasing Party's expense) the providing Party from and against any such tax or fee, interest or penalties thereon, or other charges or payable expenses (including reasonable attorney fees) with respect thereto, which are incurred by the providing Party in connection with any claim for or contest of any such tax or fee.

9.3.7 Each Party shall notify the other Party in writing of any assessment, proposed assessment or other claim for any additional amount of such a tax or fee by a taxing authority; provided, however, that the failure of a Party to provide notice shall not relieve the other Party of any obligations hereunder.

9.4 <u>Taxes and Fees Imposed on Providing Party But Passed On To Purchasing Party</u>

9.4.1 Taxes and fees imposed on the providing Party, which are permitted or required to be passed on by the providing Party to its customer, shall be borne by the purchasing Party.

9.4.2 To the extent permitted by applicable law, any such taxes and/or fees shall be shown on applicable billing documents between the Parties. Notwithstanding the foregoing, the purchasing Party shall remain liable for any such taxes and fees regardless of whether they are actually billed by the providing Party at the time that the respective service is billed.

9.4.3 If the purchasing Party disagrees with the providing Party's determination as to the application of or basis for any such tax or fee, the Parties shall consult with respect to the imposition and billing of such tax or fee. Notwithstanding the foregoing, the providing Party shall retain ultimate responsibility for determining whether and to what extent any such taxes or fees are applicable, and the purchasing Party shall abide by such determination and pay such taxes or fees to the providing Party. The providing Party shall further retain ultimate responsibility for determining whether and how to contest the imposition of such taxes and fees; provided, however, that any such contest undertaken at the request of the purchasing Party shall be at the purchasing Party's expense.

9.4.4 In the event that all or any portion of an amount sought to be collected must be paid in order to contest the imposition of any such tax or fee, or to avoid the existence of a lien on the assets of the providing Party during the pendency of such contest, the purchasing Party shall be responsible for such payment and shall be entitled to the benefit of any refund or recovery. The purchasing Party shall have the right to contest, at its own expense, any such tax or fee that it believes is not applicable or was paid by it in error. If requested in writing by the purchasing Party, the providing Party shall facilitate such contest either by assigning to the purchasing Party its right to claim a refund of such tax or fee, if such an assignment is permitted under applicable law, or, if an assignment is not permitted, by filing and pursuing a claim for refund on behalf of the purchasing Party but at the purchasing Party's expense.

9.4.5 If it is ultimately determined that any additional amount of such a tax or fee is due to the imposing authority, the purchasing Party shall pay such additional amount, including any interest and penalties thereon.

9.4.6 Notwithstanding any provision to the contrary, the purchasing Party shall protect, indemnify and hold harmless (and defend at the purchasing Party's expense) the providing Party from and against any such tax or fee, interest or penalties thereon, or other charges or payable expenses (including reasonable attorneys' fees) with respect thereto, which are incurred by the providing Party in connection with any claim for or contest of any such tax or fee.

9.4.7 Each Party shall notify the other Party in writing of any assessment, proposed assessment or other claim for any additional amount of such a tax or fee by a taxing authority; provided, however, that the failure of a Party to provide notice shall not relieve the other Party of any obligations hereunder.

9.5 <u>Additional Provisions Applicable to All Taxes and Fees</u>

9.5.1 In any contest of a tax or fee by one Party, the other Party shall cooperate fully by providing records, testimony and such additional information or assistance as may reasonably be necessary to pursue the contest. Further, the other Party shall be reimbursed for any reasonable and necessary out-of-pocket copying and travel expenses incurred in assisting in such contest.

9.5.2 Notwithstanding any provision of this Agreement to the contrary, any administrative, judicial, or other proceeding concerning the application or amount of a tax or fee shall be maintained in accordance with the provisions of this Section and any applicable federal, state or local law governing the resolution of such disputed tax or fee; and under no circumstances shall either Party have the right to bring a dispute related to the application or amount of tax or fee before a regulatory authority.

10 Force Majeure

In the event performance of this Agreement, or any obligation hereunder, is either directly or indirectly prevented, restricted, or interfered with by reason of fire, flood, earthquake or like acts of God, wars, revolution, civil commotion, explosion, acts of public enemy, embargo, acts of the government in its sovereign capacity, labor difficulties, including without limitation, strikes, slowdowns, picketing, or boycotts, unavailability of equipment from vendor, changes requested by Access Point, or any other circumstances beyond the reasonable control and without the fault or negligence of the Party affected, the Party affected shall be excused from such performance on a day-to-day basis to the extent of such prevention, restriction, or interference (and the other Party shall likewise be excused from performance of its obligations on a day-to-day basis until the delay, restriction or interference has ceased); provided, however, that the Party so affected shall use diligent efforts to avoid or remove such causes of non-performance and both Parties shall proceed whenever such causes are removed or cease. The Party affected shall provide notice of the Force Majeure event within a reasonable period of time following such an event.

11 Adoption of Agreements

Pursuant to 47 U.S.C. § 252(i) and 47 C.F.R. § 51.809, BellSouth shall make available to Access Point any entire interconnection agreement filed and approved pursuant to 47 U.S.C. § 252. The adopted agreement shall apply to the same states as the agreement that was adopted, and the term of the adopted agreement shall expire on the same date as set forth in the agreement that was adopted.

12 Modification of Agreement

12.1 If Access Point changes its name or makes changes to its company structure or identity due to a merger, acquisition, transfer or any other reason, it is the responsibility of Access Point to notify BellSouth of said change, request that an amendment to this Agreement, if necessary, be executed to reflect said change and notify the Commission of such modification of company structure in accordance with the state rules governing such modification in company structure if applicable.

Additionally, Access Point shall provide BellSouth with any necessary supporting documentation, which may include, but is not limited to, a credit application, Application for Master Account, proof of authority to provide telecommunications services, the appropriate Operating Company Number (OCN) for each state as assigned by National Exchange Carrier Association (NECA), Carrier Identification Code (CIC), Access Customer Name and Abbreviation (ACNA), BellSouth's blanket form letter of authority (LOA), Misdirected Number form and a tax exemption certificate.

12.2 No modification, amendment, supplement to, or waiver of the Agreement or any of its provisions shall be effective and binding upon the Parties unless it is made in writing and duly signed by the Parties.

12.3 In the event that any effective legislative, regulatory, judicial or other legal action materially affects any material terms of this Agreement, or the ability of Access Point or BellSouth to perform any material terms of this Agreement, Access Point or BellSouth may, on thirty (30) days' written notice, require that such terms be renegotiated, and the Parties shall renegotiate in good faith such mutually acceptable new terms as may be required. In the event that such new terms are not renegotiated within forty-five (45) days after such notice, and either Party elects to pursue resolution of such amendment such Party shall pursue the dispute resolution process set forth in Section 8 above.

13 Legal Rights

Execution of this Agreement by either Party does not confirm or imply that the executing Party agrees with any decision(s) issued pursuant to the Telecommunications Act of 1996 and the consequences of those decisions on specific language in this Agreement. Neither Party waives its rights to appeal or otherwise challenge any such decision(s) and each Party reserves all of its rights to pursue any and all legal and/or equitable remedies, including appeals of any such decision(s).

14 Indivisibility

Subject to Section 15 below, the Parties intend that this Agreement be indivisible and nonseverable, and each of the Parties acknowledges that it has assented to all of the covenants and promises in this Agreement as a single whole and that all of such covenants and promises, taken as a whole, constitute the essence of the contract. Without limiting the generality of the foregoing, each of the Parties acknowledges that any provision by BellSouth of collocation space under this Agreement is solely for the purpose of facilitating the provision of other services under this Agreement as set forth in Attachment 4. The Parties further acknowledge that this Agreement is intended to constitute a single transaction and that the obligations of the Parties under this Agreement are interdependent.

15 Severability

If any provision of this Agreement, or part thereof, shall be held invalid or unenforceable in any respect, the remainder of the Agreement or provision shall not be affected thereby, provided that the Parties shall negotiate in good faith to reformulate such invalid provision, or part thereof, or related provision, to reflect as closely as possible the original intent of the parties, consistent with applicable law, and to effectuate such portions thereof as may be valid without defeating the intent of such provision. In the event the Parties are unable to mutually negotiate such replacement language, either Party may elect to pursue the dispute resolution process set forth in Section 8 above.

16 Non-Waivers

A failure or delay of either Party to enforce any of the provisions hereof, to exercise any option which is herein provided, or to require performance of any of the provisions hereof shall in no way be construed to be a waiver of such provisions or options, and each Party, notwithstanding such failure, shall have the right thereafter to insist upon the performance of any and all of the provisions of this Agreement.

17 Governing Law

Where applicable, this Agreement shall be governed by and construed in accordance with federal and state substantive telecommunications law, including rules and regulations of the FCC and appropriate Commission. In all other respects, this Agreement shall be governed by and construed and enforced in accordance with the laws of the State of Georgia without regard to its conflict of laws principles.

18 Assignments and Transfers

18.1 Any assignment by either Party to any entity of any right, obligation or duty, or of any other interest hereunder, in whole or in part, without the prior written consent of the other Party shall be void. The assignee must provide evidence of a Commission approved certification to provide Telecommunications Service in each state that Access Point is entitled to provide Telecommunications Service. After BellSouth's consent, the Parties shall amend this Agreement to reflect such assignments and shall work cooperatively to implement any changes required due to such assignment. All obligations and duties of any Party under this Agreement shall be binding on all successors in interest and assigns of such Party. No assignment or delegation hereof shall relieve the assignor of its obligations under this Agreement in the event that the assignee fails to perform such obligations. Notwithstanding anything to the contrary in this Section, Access Point shall not be permitted to assign this Agreement in whole or in part to any entity unless either (1) Access Point pays all bills, past due and current, under this Agreement, or (2) Access Point's assignee expressly assumes liability for payment of such bills.

18.2 In the event that Access Point desires to transfer any services hereunder to another provider of Telecommunications Service, or Access Point desires to assume hereunder any services provisioned by BellSouth to another provider of

Telecommunications Service, such transfer of services shall be subject to separately negotiated rates, terms and conditions.

19 Notices

19.1 Every notice, consent or approval of a legal nature, required or permitted by this Agreement shall be in writing and shall be delivered either by hand, by overnight courier or by US mail postage prepaid, or email if an email address is listed below, addressed to:

BellSouth Telecommunications, Inc.

BellSouth Local Contract Manager
600 North 19th Street, 10th floor
Birmingham, AL 35203

and

ICS Attorney
Suite 4300
675 West Peachtree Street
Atlanta, GA 30375

Access Point, Inc.

Richard E. Brown-CEO
1100 Crescent Green, Suite 109
Cary, NC 27511

or at such other address as the intended recipient previously shall have designated by written notice to the other Party.

19.2 Unless otherwise provided in this Agreement, notice by mail shall be effective on the date it is officially recorded as delivered by return receipt or equivalent, and in the absence of such record of delivery, it shall be presumed to have been delivered the fifth day, or next business day after the fifth day, after it was deposited in the mails.

19.3 Notwithstanding the above, BellSouth will post to BellSouth's Interconnection Web site changes to business processes and policies and shall post to BellSouth's Interconnection Web site or submit through applicable electronic systems, other service and business related notices not requiring an amendment to this Agreement.

20 Rule of Construction

No rule of construction requiring interpretation against the drafting Party hereof shall apply in the interpretation of this Agreement.

21 Headings of No Force or Effect

The headings of Articles and Sections of this Agreement are for convenience of reference only, and shall in no way define, modify or restrict the meaning or interpretation of the terms or provisions of this Agreement.

22 Multiple Counterparts

This Agreement may be executed in multiple counterparts, each of which shall be deemed an original, but all of which shall together constitute but one and the same document.

23 Filing of Agreement

This Agreement, and any amendments hereto, shall be filed with the appropriate state regulatory agency pursuant to the requirements of Section 252 of the Act, or as otherwise required by the state and the Parties shall share equally in any applicable fees. Notwithstanding the foregoing, this Agreement shall not be submitted for approval by the appropriate state regulatory agency unless and until such time as Access Point is duly certified as a local exchange carrier in such state, except as otherwise required by a Commission.

24 Compliance with Law

The Parties have negotiated their respective rights and obligations pursuant to substantive Federal and State Telecommunications law and this Agreement is intended to memorialize the Parties' mutual agreement with respect to each Party's rights and obligations under the Act and applicable FCC and Commission orders, rules and regulations. Nothing contained herein, nor any reference to applicable rules and orders, is intended to expand on the Parties' rights and obligations as set forth herein. To the extent the provisions of this Agreement differ from the provisions of any Federal or State Telecommunications statute, rule or order in effect as of the execution of this Agreement, this Agreement shall control. Each Party shall comply at its own expense with all other laws of general applicability.

25 Necessary Approvals

Each Party shall be responsible for obtaining and keeping in effect all approvals from, and rights granted by, governmental authorities, building and property owners, other carriers, and any other persons that may be required in connection with the performance of its obligations under this Agreement. Each Party shall reasonably cooperate with the other Party in obtaining and maintaining any required approvals and rights for which such Party is responsible.

26 Good Faith Performance

Each Party shall act in good faith in its performance under this Agreement and, in each case in which a Party's consent or agreement is required or requested hereunder, such Party shall not unreasonably withhold or delay such consent or agreement.

27. Rates

27.1 Access Point shall pay the charges set forth in this Agreement. In the event that BellSouth is unable to bill the applicable rate or no rate is established or included in this Agreement for any services provided pursuant to this Agreement, BellSouth reserves the right to back bill Access Point for such rate or for the difference between the rate actually billed and the rate that should have been billed pursuant to this Agreement; provided, however, that subject to Access Point's agreement to the limitation regarding billing disputes as described in Section 2.2 of Attachment 7 hereof, BellSouth shall not back bill any amounts for services rendered more than twelve (12) months prior to the date that the charges or additional charges for such services are actually billed. Notwithstanding the foregoing, both Parties recognize that situations may exist which could necessitate back billing beyond twelve (12) months. These exceptions are:

- Charges connected with jointly provided services whereby meet point billing guidelines require either Party to rely on records provided by a third party and such records have not been provided in a timely manner;
- Charges incorrectly billed due to erroneous information supplied by the non-billing Party.
- Charges for which a regulatory body has granted the billing Party the authority to back bill beyond twelve (12) months.

27.2 To the extent a rate element is omitted or no rate is established, BellSouth has the right not to provision such service until the Agreement is amended to include such rate.

27.3 To the extent Access Point requests services not included in this Agreement, such services shall be provisioned pursuant to the rates, terms and conditions set forth in the applicable tariffs or a separately negotiated Agreement, unless the Parties agree to amend this Agreement to include such service prospectively.

27.4 Where a Commission has adopted rates for Network Elements or services provided under this Agreement, as of the Effective Date, it is the intent of the Parties that the rate exhibits incorporated into this Agreement will be those rates, unless otherwise negotiated by the Parties. Upon request of either Party, errors in rate sheets will be corrected up to ninety (90) calendar days retroactively, and prospectively, by amendment to this Agreement. This Section shall not affect either Party's rights pursuant to Section 27.1 above for charges other than those for which there is an error in the rates sheets.

28 Rate True-Up

28.1 This section applies to rates that are expressly subject to true-up**.**

28.2 The rates shall be trued-up, either up or down, based on final prices determined either by further agreement between the Parties, or by a final and effective order of

the Commission. The Parties shall implement the true-up by comparing the actual volumes and demand for each item, together with the rates for each item, with the final prices determined for each item. Each Party shall keep its own records upon which the true-up can be based, and any final payment from one Party to the other shall be in an amount agreed upon by the Parties based on such records. In the event of any discrepancy between the records or disagreement between the Parties regarding the amount of such true-up, the dispute shall be subject to the dispute resolution process set forth in this Agreement.

28.3 A final and effective order of the Commission that forms the basis of a true-up shall be based upon cost studies submitted by either or both Parties to the Commission and shall be binding upon BellSouth and Access Point specifically or upon all carriers generally, such as a generic cost proceeding.

29 Survival

The Parties' obligations under this Agreement which by their nature are intended to continue beyond the termination or expiration of this Agreement shall survive the termination or expiration of this Agreement.

30 Entire Agreement

30.1 This Agreement means the General Terms and Conditions, the Attachments hereto and all documents identified therein, as such may be amended from time to time and which are incorporated herein by reference, all of which, when taken together, are intended to constitute one indivisible agreement. This Agreement sets forth the entire understanding and supersedes prior agreements between the Parties relating to the subject matter contained in this Agreement and merges all prior discussions between them. Any orders placed under prior agreements between the Parties shall be governed by the terms of this Agreement and Access Point acknowledges and agrees that any and all amounts and obligations owed for services provisioned or orders placed under prior agreements between the Parties, related to the subject matter hereof, shall, as of the Effective Date, be due and owing under this Agreement and be governed by the terms and conditions of this Agreement as if such services or orders were provisioned or placed under this Agreement. Neither Party shall be bound by any definition, condition, provision, representation, warranty, covenant or promise other than as expressly stated in this Agreement or as is contemporaneously or subsequently set forth in writing and executed by a duly authorized officer or representative of the Party to be bound thereby.

30.2 Any reference throughout this Agreement to a tariff, industry guideline, BellSouth's technical guideline or reference, BellSouth business rule, guide or other such document containing processes or specifications applicable to the services provided pursuant to this Agreement, shall be construed to refer to only those provisions thereof that are applicable to these services, and shall include any successor or replacement versions thereof, all as they are amended from time to time and all of which are incorporated herein by reference, and may be found at BellSouth's Interconnection Web site at: www.interconnection.bellsouth.com.

References to state tariffs throughout this Agreement shall be to the tariff for the state in which the services were provisioned; provided, however, that in any state where certain BellSouth services or tariff provisions have been or become deregulated or detariffed, any reference in this Agreement to a detariffed or deregulated service or provision of such tariff shall be deemed to refer to the service description, price list or other agreement pursuant to which BellSouth provides such services as a result of detariffing or deregulation.

IN WITNESS WHEREOF, the Parties have executed this Agreement the day and year written below.

BellSouth Telecommunications, Inc.	**Access Point, Inc.**
By: Kristen E. Shore	By: Richard E. Brown
Name: Kristen E. Shore	Name: RICHARD E. BROWN
Title: Director	Title: CEO
Date: 9/28/06	Date: 8/16/06

CCCS 26 of 551

Attachment 1

Resale

Table of Contents

1. Discount Rates 4

2. Definition of Terms 4

3. General Provisions 4

4 BellSouth's Provision of Services to Access Point 7

5. Maintenance of Services 8

6. Discontinuance of Service 8

7. White Pages Listings 9

8. Operator Services (Operator Call Processing and Directory Assistance) 10

9. Branding for Wholesale OCP and DA 12

10. LIDB 13

11. Revenue Accounting Office (RAO) Hosting 13

12. Optional Daily Usage File (ODUF) 13

13. Enhanced Optional Daily Usage File (EODUF) 13

Resale Restrictions ..... Exhibit A

Optional Daily Usage File (ODUF) ..... Exhibit B

Enhanced Option Daily Usage File (EODUF) ..... Exhibit C

Resale Discounts and Rates ..... Exhibit D

RESALE

1. Discount Rates

1.1 The discounts rates applied to Access Point's purchases of BellSouth Telecommunications Services for the purpose of resale shall be as set forth in Exhibit D. Such discounts have been determined by the applicable Commission to reflect the costs avoided by BellSouth when selling a service for wholesale purposes.

1.2 The Telecommunications Services available for purchase by Access Point for the purposes of resale to Access Point's customers shall be available at BellSouth's tariffed rates less the discount reflected in Exhibit D and subject to the exclusions and limitations in Exhibit A.

2. Definition of Terms

For purposes of this Attachment only, the following terms shall have the definitions as set forth below:

2.1 Customer of Record means the entity responsible for placing application for service; requesting additions, rearrangements, maintenance or discontinuance of service; payment in full of charges incurred such as nonrecurring, monthly recurring, toll, directory assistance, etc.

2.2 End User Customer Location means the physical location of the premises where a customer makes use of the Telecommunications Services.

2.3 New Services means functions, features or capabilities that are not currently offered by BellSouth. This includes packaging of existing services or combining a new function, feature or capability with an existing service.

2.4 Resale means an activity wherein a certificated CLEC, such as Access Point, subscribes to the retail Telecommunications Services of BellSouth and then offers those retail Telecommunications Services to the public.

3. General Provisions

3.1 All of the negotiated rates, terms and conditions set forth in this Attachment pertain to the resale of BellSouth's retail Telecommunications Services and other services specified in this Attachment. Subject to effective and applicable FCC and Commission rules and orders, BellSouth shall make available to Access Point for resale those Telecommunications Services BellSouth makes available, pursuant to its General Subscriber Services Tariff (GSST) and Private Line Services Tariff, to customers who are not Telecommunications carriers.

3.1.1 When Access Point provides Resale service in a cross boundary area (customer is physically located in a particular state and is served by a central office in an adjoining state) the rates, regulations and discounts for the state in which the serving central office is located will apply. Billing will be from the state in which the customer is located.

3.2 Access Point as a reseller of Lifeline and Link-Up Services hereby certifies that it has and will comply with the FCC requirements governing the Lifeline and Link-

Up programs as set forth in 47 C.F.R. § 54.417(a) and (b). This includes the requirements set forth in BellSouth's GSST, Sections A3.31 and A4.7.

3.2.1 Access Point shall maintain records to document FCC or applicable state eligibility and verification records to document compliance governing the Lifeline/Link-Up programs for the three (3) full preceding calendar years, and Access Point shall provide such documentation to the FCC or it's Administrator upon request.

3.2.2 In Tennessee, if Access Point does not resell Lifeline service to any end users, and if Access Point agrees to order an appropriate Operator Services/Directory Assistance block as set forth in BellSouth's GSST, the discount shall be twenty-one point fifty-six percent (21.56%).

3.2.2.1 In the event Access Point resells Lifeline service to any end user in Tennessee, BellSouth will begin applying the sixteen percent (16%) discount rate to all services. Upon Access Point and BellSouth's implementation of a billing arrangement whereby a separate Master Account (Q-account) associated with a separate OCN is established for billing of Lifeline service end users, the discount shall be applied as set forth in Section 3.2.2 above for the non-Lifeline affected Master Account (Q-account).

3.2.2.2 Access Point must provide written notification to BellSouth within thirty (30) days prior to either providing its own operator services/directory services or ordering the appropriate operator services/directory assistance blocking, to qualify for the higher discount rate of twenty-one point fifty-six percent (21.56%).

3.3 Access Point may purchase resale services from BellSouth for its own use in operating its business. The resale discount will apply to those services under the following conditions:

3.3.1 Access Point must resell services to other end users.

3.3.2 Access Point cannot be a CLEC for the single purpose of selling to itself.

3.3.3 Access Point will be the Customer of Record for all services purchased from BellSouth. Except as specified herein, BellSouth will take orders from, bill and receive payment from Access Point for said services.

3.4 Access Point will be BellSouth's single point of contact for all services purchased pursuant to this Agreement. BellSouth shall have no contact with the customer except to the extent provided for herein.

3.5 BellSouth will continue to bill the customer for any services that the customer specifies it wishes to receive directly from BellSouth. BellSouth maintains the right to serve directly any customer within the service area of Access Point. BellSouth will continue to market directly its own Telecommunications products and services and in doing so may establish independent relationships with customers of Access Point. Neither Party shall interfere with the right of any person or entity to obtain service directly from the other Party.

3.5.1 BellSouth will accept a request from another CLEC for conversion of the customer's service from Access Point to such other CLEC. Upon completion of

the conversion BellSouth will notify Access Point that such conversion has been completed.

3.5.2 When a customer of Access Point or BellSouth elects to change his/her carrier to the other Party, both Parties agree to release the customer's service to the other Party concurrent with the due date of the service order, which shall be established based on the standard interval for the customer's requested service as set forth in the BellSouth Product and Services Interval Guide.

3.5.3 BellSouth and Access Point will refrain from contacting an customer who has placed or whose selected carrier has placed on the customer's behalf an order to change the customer's service provider from BellSouth or Access Point to the other Party until such time that the order for service has been completed.

3.6 Current telephone numbers may normally be retained by the customer and are assigned to the service furnished. However, neither Party nor the customer has a property right to the telephone number or any other call number designation associated with services furnished by BellSouth, and no right to the continuance of service through any particular central office. BellSouth reserves the right to change such numbers, or the central office designation associated with such numbers, or both, whenever BellSouth deems it necessary to do so in the conduct of its business and in accordance with BellSouth practices and procedures on a nondiscriminatory basis.

3.7 Service is furnished subject to the condition that it will not be used for any unlawful purpose.

3.8 Service will be discontinued if any law enforcement agency advises that the service being used is in violation of the law.

3.9 BellSouth can refuse service when it has grounds to believe that service will be used in violation of the law.

3.10 If Access Point or its customers utilize a BellSouth resold Telecommunications Service in a manner other than that for which the service was originally intended as described in BellSouth's retail tariffs Access Point has the responsibility to notify BellSouth. BellSouth will only provision and maintain said service consistent with the terms and conditions of the tariff describing said service.

3.11 Facilities and/or equipment utilized by BellSouth to provide service to Access Point remain the property of BellSouth.

3.12 <u>Service Ordering and Operations Support Systems (OSS)</u>

3.12.1 Access Point must order services through resale interfaces, i.e., the Local Carrier Service Center (LCSC) and/or appropriate Complex Resale Support Group (CRSG) pursuant to this Agreement. Access Point may submit a Local Service Request (LSR) electronically as set forth in Attachment 6. Service orders will be in a standard format designated by BellSouth.

3.12.2 BellSouth messaging services set forth in BellSouth's Messaging Service Re-Seller Information Package shall be made available for resale without the wholesale discount.

3.13 BellSouth's Inside Wire Maintenance Service Plan is available for resale at rates, terms and conditions as set forth by BellSouth and without the wholesale discount.

3.14 In the event Access Point acquires a customer whose service is provided pursuant to a BellSouth Special Assembly, BellSouth shall make available to Access Point that Special Assembly at the wholesale discount at Access Point's option. Access Point shall be responsible for all terms and conditions of such Special Assembly including but not limited to termination liability if applicable.

3.15 BellSouth shall provide 911/E911 for Access Point customers in the same manner that it is provided to BellSouth customers. BellSouth shall provide and validate Access Point customer information to the Public Safety Answering Point (PSAP). BellSouth shall use its service order process to update and maintain, on the same schedule that it uses for its customers, the Access Point customer information in the Automatic Location Identification/Data Management System (ALI/DMS) databases used to support 911/E911 services.

3.16 Pursuant to 47 C.F.R. § 51.617, BellSouth shall bill to Access Point, and Access Point shall pay, the End User Common Line (EUCL) charges identical to the EUCL charges BellSouth bills its customers.

4 BellSouth's Provision of Services to Access Point

4.1 Resale of BellSouth services shall be as follows:

4.1.1 The resale of Telecommunications Services shall be limited to users and uses conforming to the class of service restrictions.

4.1.2 Hotel and Hospital PBX services are the only Telecommunications Services available for resale to Hotel/Motel and Hospital customers, respectively. Similarly, Access Line Service for Customer Provided Coin Telephones is the only local service available for resale to Payphone Service Provider (PSP) customers. Shared Tenant Service customers can only be sold those local exchange access services available in BellSouth's GSST Section A23, Shared Tenant Service Section in the states of Florida, Georgia, North Carolina and South Carolina, and in A27 in the states of Alabama, Kentucky, Louisiana, Mississippi and Tennessee.

4.1.3 BellSouth reserves the right to periodically audit services purchased by Access Point to establish authenticity of use. Such audit shall not occur more than once in a calendar year. Access Point shall make any and all records and data available to BellSouth or BellSouth's auditors on a reasonable basis. BellSouth shall bear the cost of said audit. Any information provided by Access Point for purposes of such audit shall be deemed Confidential Information pursuant to the General Terms and Conditions.

4.2 Subject to Exhibit A hereto, resold services can only be used in the same manner as specified in BellSouth's Tariffs. Resold services are subject to the same terms and conditions as are specified for such services when furnished to an individual customer of BellSouth in the appropriate section of BellSouth's Tariffs. Specific

tariff features (e.g., a usage allowance per month) shall not be aggregated across multiple resold services.

4.3 If Access Point cancels an order for resold services, any costs incurred by BellSouth in conjunction with provisioning of such order will be recovered in accordance with BellSouth's GSST and Private Line Services Tariffs.

4.4 Service Jointly Provisioned with an Independent Company or CLEC

4.4.1 BellSouth will in some instances provision resold services in accordance with BellSouth's GSST and Private Line Tariffs jointly with an Independent Company (ICO) or other CLEC.

4.4.2 When Access Point assumes responsibility for such service, all terms and conditions defined in the Tariff will apply for services provided within the BellSouth service area only.

4.4.3 Service terminating in an ICO or other CLEC area will be provisioned and billed by the ICO or other CLEC directly to Access Point.

4.4.4 Access Point must establish a billing arrangement with the ICO or other CLEC prior to assuming a customer account where such circumstances apply.

4.4.5 Specific guidelines regarding such services are available on the BellSouth Interconnection Web site.

5. Maintenance of Services

5.1 Services resold pursuant to this Attachment and BellSouth's GSST and Private Line Service Tariff and facilities and equipment provided by BellSouth shall be maintained by BellSouth.

5.2 Access Point or its customers may not rearrange, move, disconnect, remove or attempt to repair any facilities owned by BellSouth except with the written consent of BellSouth.

5.3 Access Point accepts responsibility to notify BellSouth of situations that arise that may result in a service problem.

5.4 Access Point will contact the appropriate repair centers in accordance with procedures established by BellSouth.

5.5 For all repair requests, Access Point shall adhere to BellSouth's prescreening guidelines prior to referring the trouble to BellSouth.

5.6 BellSouth reserves the right to contact Access Point's customers, if deemed necessary, for maintenance purposes.

6. Discontinuance of Service

6.1 The procedures for discontinuing service to a customer are as follows:

6.1.1 BellSouth will deny service to Access Point's customer on behalf of, and at the request of, Access Point. Upon restoration of the customer's service, restoral charges will apply and will be the responsibility of Access Point.

6.1.2 At the request of Access Point, BellSouth will disconnect a Access Point customer.

6.1.3 All requests by Access Point for denial or disconnection of a customer for nonpayment must be in writing.

6.1.4 Access Point will be made solely responsible for notifying the customer of the proposed disconnection of the service.

6.1.5 BellSouth will continue to process calls made to the Annoyance Call Center and will advise Access Point when it is determined that annoyance calls are originated from one of its customer's locations. BellSouth shall be indemnified, defended and held harmless by Access Point and/or the customer against any claim, loss or damage arising from providing this information to Access Point. It is the responsibility of Access Point to take the corrective action necessary with its customer who make annoying calls. (Failure to do so will result in BellSouth's disconnecting the customer's service.)

7. White Pages Listings

7.1 BellSouth shall provide Access Point and its end users access to white pages directory listings under the following terms:

7.1.1 Listings. Access Point shall provide all new, changed and deleted listings on a timely basis and BellSouth or its agent will include Access Point residential and business customer listings in the appropriate White Pages (residential and business) or alphabetical directories in the geographic areas covered by this Agreement. Directory listings will make no distinction between Access Point and BellSouth customers. Access Point shall provide listing information in accordance with the procedures set forth in The BellSouth Business Rules for Local Ordering found at BellSouth's Interconnection Services Web site.

7.1.2 Unlisted/Non-Published Customers. Access Point will be required to provide to BellSouth the names, addresses and telephone numbers of all Access Point customers who wish to be omitted from directories. Unlisted/Non-Published listings will be subject to the rates as set forth in BellSouth's GSST and shall not be subject to the wholesale discount.

7.1.3 Inclusion of Access Point Customers in Directory Assistance Database. BellSouth will include and maintain Access Point customer listings in BellSouth's Directory Assistance databases. Access Point shall provide such Directory Assistance listings to BellSouth at no charge.

7.1.4 Listing Information Confidentiality. BellSouth will afford Access Point's directory listing information the same level of confidentiality that BellSouth affords its own directory listing information.

7.1.5 Additional and Designer Listings. Additional and designer listings will be offered by BellSouth at tariffed rates as set forth in BellSouth's GSST and shall not be subject to the wholesale discount.

7.1.6 Rates. So long as Access Point provides listing information to BellSouth as set forth in Section 7.1.2 above, BellSouth shall provide to Access Point one (1) basic

White Pages directory listing per Access Point customer at no charge other than the manual service order charge or the electronic service order charge, as appropriate, as described in Attachment 6.

7.2 Directories. BellSouth or its agent shall make available White Pages directories to Access Point customer at no charge or as specified in a separate agreement between Access Point and BellSouth's agent.

7.3 Procedures for submitting Access Point Subscriber Listing Information (SLI) are found in The BellSouth Business Rules for Local Ordering found at BellSouth's Interconnection Services Web site.

7.3.1 Access Point authorizes BellSouth to release all Access Point SLI provided to BellSouth by Access Point to qualifying third parties pursuant to either a license agreement or BellSouth's Directory Publishers Database Service (DPDS) in BellSouth's GSST. Such Access Point SLI shall be intermingled with BellSouth's own customer listings and listings of any other CLEC that has authorized a similar release of SLI.

7.3.2 No compensation shall be paid to Access Point for BellSouth's receipt of Access Point's SLI, or for the subsequent release to third parties of such SLI. In addition, to the extent BellSouth incurs costs to modify its systems to enable the release of Access Point's SLI, or costs on an ongoing basis to administer the release of Access Point's SLI, Access Point shall pay to BellSouth its proportionate share of the reasonable costs associated therewith. At any time that costs may be incurred to administer the release of Access Point's SLI, Access Point will be notified. If Access Point does not wish to pay its proportionate share of these reasonable costs, Access Point may instruct BellSouth that it does not wish to release its SLI to independent publishers, and Access Point shall amend this Agreement accordingly. Access Point will be liable for all costs incurred until the effective date of the amendment.

7.3.3 Neither BellSouth nor any agent shall be liable for the content or accuracy of any SLI provided by Access Point under this Agreement. Access Point shall indemnify, except to the extent caused by BellSouth's gross negligence or willful misconduct, hold harmless and defend BellSouth and its agents from and against any damages, losses, liabilities, demands, claims, suits, judgments, costs and expenses (including but not limited to reasonable attorneys' fees and expenses) arising from BellSouth's Tariff obligations or otherwise and resulting from or arising out of any third party's claim of inaccurate Access Point listings or use of the SLI provided pursuant to this Agreement. BellSouth may forward to Access Point any complaints received by BellSouth relating to the accuracy or quality of Access Point listings.

7.3.4 Listings and subsequent updates will be released consistent with BellSouth system changes and/or update scheduling requirements.

8. Operator Services (Operator Call Processing and Directory Assistance)

8.1 Operator Call Processing (OCP) provides: (1) operator handling for call completion (for example, collect, third number billing, and manual calling-card

calls); (2) operator or automated assistance for billing after the customer has dialed the called number (for example, calling card calls); and (3) special services including but not limited to Busy Line Verification and Emergency Line Interrupt (ELI), Emergency Agency Call and operator-assisted Directory Assistance (DA).

8.2 Upon request for BellSouth OCP, BellSouth shall:

8.2.1 Process 0+ and 0- dialed local calls.

8.2.2 Process 0+ and 0- intraLATA toll calls.

8.2.3 Process calls that are billed to Access Point customer's calling card that can be validated by BellSouth.

8.2.4 Process person-to-person calls.

8.2.5 Process collect calls.

8.2.6 Provide the capability for callers to bill a third party and shall also process such calls.

8.2.7 Process station-to-station calls.

8.2.8 Process Busy Line Verify and ELI requests.

8.2.9 Process emergency call trace originated by PSAP.

8.2.10 Process operator-assisted DA calls.

8.2.11 Adhere to equal access requirements, providing Access Point local customer the same IXC access that BellSouth provides its own operator service (OS).

8.2.12 Exercise at least the same level of fraud control in providing OS to Access Point that BellSouth provides for its own OS.

8.2.13 Perform Billed Number Screening when handling Collect, Person-to-Person, and Billed-To-Third-Party calls.

8.2.14 Direct customer account and other similar inquiries to the customer service center designated by Access Point.

8.3 Upon Access Point's request BellSouth shall provide call records to Access Point in accordance with Optional Daily Usage File (ODUF) standards.

8.4 The interface requirements shall conform to the interface specifications for the platform used to provide OS as long as the interface conforms to industry standards.

8.5 <u>DA Service</u>

8.5.1 DA Service provides local and non-local customer telephone number listings with the option to complete the call at the caller's direction separate and distinct from local switching.

8.5.2 DA Service shall provide up to two (2) listing requests per call, if available and if requested by Access Point's customer. BellSouth shall provide caller-optional DA call completion service at rates set forth in BellSouth's GSST to one of the provided listings.

8.6 DA Service Updates. BellSouth shall update customer listings changes daily. These changes include:

8.6.1 New customer connections;

8.6.2 Customer disconnections;

8.6.3 Customer address changes; and

8.6.4 Non-listed and non-published numbers for use in emergencies.

9. Branding for Wholesale OCP and DA

9.1 BellSouth's branding feature provides a definable announcement to Access Point's customers using BellSouth's DA/OCP prior to placing such customers in queue or connecting them to an available operator or automated operator system. This feature allows Access Point to have its calls custom branded with Access Point's name on whose behalf BellSouth is providing DA and/or OCP. Rates for the branding features are set forth in Exhibit D.

9.2 BellSouth offers three (3) branding options to Access Point when ordering BellSouth's DA and OCP: BellSouth Branding, Unbranding and Custom Branding.

9.3 Access Point's order for Custom Branding is considered firm ten (10) business days after BellSouth's receipt of the order. Access Point may cancel its order more than ten (10) business days after BellSouth's receipt of the order. Access Point shall notify BellSouth in writing and shall pay all charges per the order. For branding and unbranding via Originating Line Number Screening (OLNS), Access Point must contact its Local Contract Manager to initiate the order via the OLNS Branding Order form.

9.4 Branding via OLNS

9.4.1 BellSouth Branding, Unbranding and Custom Branding are also available for DA, OCP or both via OLNS software. When utilizing this method of Unbranding or Custom Branding, Access Point shall not be required to purchase dedicated trunking.

9.4.2 BellSouth Branding is the default branding offering.

9.4.3 For BellSouth to provide Unbranding or Custom Branding via OLNS software for OCP or for DA, Access Point must have its OCN(s) and telephone numbers reside in BellSouth's Line Information Database (LIDB). To implement Unbranding and Custom Branding via OLNS software, Access Point must submit a manual order form which requires, among other things, Access Point's OCN and a forecast, pursuant to the appropriate BellSouth form provided, for the traffic volume anticipated for each BellSouth Traffic Operator Position System (TOPS) during the peak busy hour. Access Point shall provide updates to such forecast on a quarterly basis and at any time such forecasted traffic volumes are expected to change significantly. Upon Access Point's purchase of Unbranding or Custom Branding using OLNS software for any particular TOPS, all Access Point

customers served by that TOPS will receive the Unbranded "no announcement" or the Custom Branded announcement.

10. LIDB

10.1 BellSouth LIDB stores current information on working telephone numbers and billing account numbers.

10.2 Where Access Point is purchasing Resale services BellSouth shall utilize BellSouth's service order generated from Access Point LSR's to populate LIDB with Access Point's customer information. BellSouth provides access to information in its LIDB, including Access Point customer information, to its LIDB customers via queries to LIDB.

10.2.1 When necessary for fraud control measures, BellSouth may perform additions, updates and deletions of Access Point data to the LIDB (e.g., calling card deactivation).

10.2.2 Access Point will not be charged a fee for LIDB storage services provided by BellSouth to Access Point pursuant to this Attachment.

10.3 Responsibilities of the Parties

10.3.1 BellSouth will administer the data provided by Access Point pursuant to this Agreement in the same manner as BellSouth administers its own data.

10.3.2 Access Point is responsible for completeness and accuracy of the data being provided to BellSouth.

10.3.3 BellSouth shall not be responsible to Access Point for any lost revenue which may result from BellSouth's administration of the LIDB pursuant to its established practices and procedures as they exist and as they may be changed by BellSouth in its sole discretion from time to time.

11. Revenue Accounting Office (RAO) Hosting

11.2 RAO Hosting is not required for resale in the BellSouth region.

12. Optional Daily Usage File (ODUF)

12.1 The ODUF Agreement with terms and conditions is included in this Attachment as Exhibit B. Rates for ODUF are as set forth in Exhibit D.

12.2 BellSouth will provide ODUF service upon written request.

13. Enhanced Optional Daily Usage File (EODUF)

13.1 The EODUF service Agreement with terms and conditions is included in this Attachment as Exhibit C. Rates for EODUF are as set forth in Exhibit D.

13.2 BellSouth will provide EODUF service upon written request.

EXCLUSIONS AND LIMITATIONS ON SERVICES AVAILABLE FOR RESALE (Note 4)

	Type of Service	AL		FL		GA		KY		LA		MS		NC		SC		TN	
		Resale	Discount	Resale	Discount	Resale	Discount	Resale	Discount	Resale	Discount	Resale	Discount	Resale	Discount	Resale	Discount	Resale	Discount
1	Grandfathered Services (Note 1)	Yes	Yes	Yes	Yes	Yes	Yes	Yes	Yes	Yes	Yes	Yes	Yes	Yes	Yes	Yes	Yes	Yes	Yes
2	Promotions - > 90 Days(Note 2&3)	Yes	Yes	Yes	Yes	Yes	Yes	Yes	Yes	Yes	Yes	Yes	Yes	Yes	Yes	Yes	Yes	Yes	Yes
3	Promotions - < 90 Days (Note 2 & 3)	Yes	No	Yes	No	Yes	No	Yes	No	Yes	No	Yes	No	Yes	No	Yes	No	Yes	No
4	Lifeline/Link Up Services	Yes	Yes	Yes	Yes	Yes	Yes	Yes	Yes	Yes	Yes	Yes	Yes	Yes	Yes	Yes	Yes	Yes	Yes
5	911/E911 Services	Yes	Yes	Yes	Yes	Yes	Yes	Yes	Yes	No	No	Yes	Yes	Yes	Yes	Yes	Yes	Yes	Yes
6	N11 Services (Note 1)	Yes	Yes	Yes	Yes	Yes	Yes	No	No	No	No	Yes	Yes	Yes	Yes	No	No	Yes	Yes
7	MemoryCall® Service	Yes	No	Yes	No	Yes	No	Yes	No	Yes	No	Yes	No	Yes	No	Yes	No	Yes	No
8	Mobile Services	Yes	No	Yes	No	Yes	No	Yes	No	Yes	No	Yes	No	Yes	No	Yes	No	Yes	No
9	Federal Subscriber Line Charges	Yes	No	Yes	No	Yes	No	Yes	No	Yes	No	Yes	No	Yes	No	Yes	No	Yes	No
10	Nonrecurring Charges	Yes	Yes	Yes	Yes	Yes	Yes	Yes	Yes	Yes	Yes	Yes	Yes	Yes	Yes	Yes	Yes	Yes	No
11	EUCL Charge	Yes	No	Yes	No	Yes	No	Yes	No	Yes	No	Yes	No	Yes	No	Yes	No	Yes	No
12	Public Telephone Access Svc(PTAS)	Yes	Yes	Yes	Yes	Yes	Yes	Yes	Yes	Yes	Yes	Yes	Yes	Yes	Yes	Yes	No	Yes	Yes
13	Inside Wire Maint Service Plan	Yes	No	Yes	No	Yes	No	Yes	No	Yes	No	Yes	No	Yes	No	Yes	No	Yes	No

	Applicable Notes:
1.	**Grandfathered services** can be resold only to existing subscribers of the grandfathered service.
2.	Where available for resale, **promotions** will be made available only to customers who would have qualified for the promotion had it been provided by BellSouth directly. Promotions shall be available only for the term set forth in the applicable tariff.
3.	Promotions shall be available only for the term set forth in the applicable tariff.
4.	Some of BellSouth's local exchange and toll Telecommunications Services are not available in certain central offices and areas.

Optional Daily Usage File

1. Upon written request from Access Point, BellSouth will provide the ODUF service to Access Point pursuant to the terms and conditions set forth in this section.

2. Access Point shall furnish all relevant information required by BellSouth for the provision of the ODUF.

3. The ODUF feed provides Access Point messages that were carried over the BellSouth network and processed by BellSouth for Access Point.

4. Charges for ODUF will appear on Access Point's monthly bills for the previous month's usage in arrears. The charges are as set forth in Exhibit D.

5. The ODUF feed will contain both rated and unrated messages. All messages will be in the standard Alliance for Telecommunications Industry Solutions (ATIS) Exchange Message Interface (EMI) record format.

6. ODUF Specifications

6.1 ODUF Message to be Transmitted

6.1.1 The following messages recorded by BellSouth will be transmitted to Access Point:

6.1.1.1 Message recording for per use/per activation type services (examples: Three Way Calling, Verify, Interrupt, Call Return, etc.);

6.1.1.2 Measured local calls;

6.1.1.3 Directory Assistance messages;

6.1.1.4 IntraLATA Toll;

6.1.1.5 WATS and 800 Service;

6.1.1.6 N11;

6.1.1.7 Information Service Provider Messages;

6.1.1.8 OS Messages;

6.1.1.9 OS Message Attempted Calls;

6.1.1.10 Credit/Cancel Records; and

6.1.1.11 Usage for Voice Mail Message Service.

6.1.2 Rated Incollects (messages BellSouth receives from other revenue accounting offices) appear on ODUF. Rated Incollects will be intermingled with BellSouth recorded rated and unrated usage. Rated Incollects will not be packed separately.

6.1.3 BellSouth will perform duplicate record checks on records processed to ODUF. Any duplicate messages detected will be deleted and not sent to Access Point.

6.1.4 In the event that Access Point detects a duplicate on ODUF they receive from BellSouth, Access Point will drop the duplicate message and will not return the duplicate to BellSouth.

6.2 ODUF Physical File Characteristics

6.2.1 ODUF will be distributed to Access Point via Secure File Transfer Protocol (FTP). The ODUF feed will be a variable block format. The data on the ODUF feed will be in a non-compacted EMI format (one hundred seventy-five (175) byte format plus modules). It will be created on a daily basis Monday through Friday except holidays. Details such as dataset name and delivery schedule will be addressed during negotiations of the distribution medium. There will be a maximum of one (1) dataset per workday per OCN. If BellSouth determines the Secure FTP Mailbox is nearing capacity levels, BellSouth may move the customer to CONNECT:Direct file delivery.

6.2.2 If the customer is moved, CONNECT:Direct data circuits (private line or dial-up) will be required between BellSouth and Access Point for the purpose of data transmission. Where a dedicated line is required, Access Point will be responsible for ordering the circuit, overseeing its installation and coordinating the installation with BellSouth. Access Point will also be responsible for any charges associated with this line. Equipment required on the BellSouth end to attach the line to the mainframe computer and to transmit messages successfully on an ongoing basis will be negotiated on an individual case basis. Any costs incurred for such equipment will be Access Point's responsibility. Where a dial-up facility is required, dial circuits will be installed in the BellSouth data center by BellSouth and the associated charges assessed to Access Point. Additionally, all message toll charges associated with the use of the dial circuit by Access Point will be the responsibility of Access Point. Associated equipment on the BellSouth end, including a modem, will be negotiated on an individual case basis between the Parties. All equipment, including modems and software, that is required on Access Point's end for the purpose of data transmission will be the responsibility of Access Point.

6.2.3 If Access Point utilizes FTP for data file transmission, purchase of the FTP software will be the responsibility of Access Point.

6.3 ODUF Packing Specifications

6.3.1 The data will be packed using ATIS EMI records. A pack will contain a minimum of one (1) message record or a maximum of ninety-nine thousand nine hundred and ninety-nine (99,999) message records plus a pack header record and a pack trailer record. One transmission can contain a maximum of ninety-nine (99) packs and a minimum of one (1) pack.

6.3.2 The OCN, From RAO, and Invoice Number will control the invoice sequencing. The From RAO will be used to identify to Access Point which BellSouth RAO is sending the message. BellSouth and Access Point will use the invoice sequencing to control data exchange. BellSouth will be notified of sequence failures identified by Access Point and resend the data as appropriate.

6.4 ODUF Pack Rejection

6.4.1 Access Point will notify BellSouth within one (1) business day of rejected packs (via the mutually agreed medium). Packs could be rejected because of pack sequencing discrepancies or a critical edit failure on the Pack Header or Pack Trailer records (e.g., out-of-balance condition on grand totals, invalid data populated). Standard ATIS EMI error codes will be used. Access Point will not be required to return the actual rejected data to BellSouth. Rejected packs will be corrected and retransmitted to Access Point by BellSouth.

6.5 ODUF Control Data

6.5.1 Access Point will send one confirmation record per pack that is received from BellSouth. This confirmation record will indicate Access Point's receipt of the pack and the acceptance or rejection of the pack. Pack Status Code(s) will be populated using standard ATIS EMI error codes for packs that were rejected by Access Point for reasons stated in the above section.

6.6 ODUF Testing

6.6.1 Upon request from Access Point, BellSouth shall send ODUF test files to Access Point. The Parties agree to review and discuss the ODUF file content and/or format. For testing of usage results, BellSouth shall request that Access Point set up a production (live) file. The live test may consist of Access Point's employees making test calls for the types of services Access Point requests on ODUF. These test calls are logged by Access Point, and the logs are provided to BellSouth. These logs will be used to verify the files. Testing will be completed within thirty (30) days from the date on which the initial test file was sent.

Enhanced Optional Daily Usage File

1. Upon written request from Access Point, BellSouth will provide the EODUF service to Access Point pursuant to the terms and conditions set forth in this section. EODUF will only be sent to existing ODUF subscribers who request the EODUF option.

2. Access Point shall furnish all relevant information required by BellSouth for the provision of the EODUF.

3. The EODUF will provide usage data for local calls originating from resold Flat Rate Business and Residential Lines.

4. Charges for EODUF will appear on Access Point's monthly bills for the previous month's usage in arrears. The charges are as set forth in Exhibit D.

5. All messages will be in the standard ATIS EMI record format.

6. Messages that error in the billing system of Access Point will be the responsibility of Access Point. If, however, Access Point should encounter significant volumes of errored messages that prevent processing by Access Point within its systems, BellSouth will work with Access Point to determine the source of the errors and the appropriate resolution.

7. EODUF Specifications

7.1 EODUF Usage To Be Transmitted

7.1.1 The following messages recorded by BellSouth will be transmitted to Access Point:

7.1.1.1 Customer usage data for flat rated local calls originating from Access Point's customer lines (1FB or 1FR). The EODUF record for flat rate messages will include:

7.1.1.1.1 Date of Call

7.1.1.1.2 From Number

7.1.1.1.3 To Number

7.1.1.1.4 Connect Time

7.1.1.1.5 Conversation Time

7.1.1.1.6 Method of Recording

7.1.1.1.7 From RAO

7.1.1.1.8 Rate Class

7.1.1.1.9 Message Type

7.1.1.1.10 Billing Indicators

7.1.1.1.11 Bill to Number

7.1.2 BellSouth will perform duplicate record checks on EODUF records processed to ODUF. Any duplicate messages detected will be deleted and not sent to Access Point.

7.1.3 In the event that Access Point detects a duplicate on EODUF they receive from BellSouth, Access Point will drop the duplicate message and will not return the duplicate to BellSouth.

7.2 EODUF Physical File Characteristics

7.2.1 EODUF feed will be distributed to Access Point via FTP. The EODUF messages will be intermingled among Access Point's ODUF messages. The EODUF will be a variable block format. The data on the EODUF will be in a non-compacted EMI format (one hundred seventy-five (175) byte format plus modules). It will be created on a daily basis Monday through Friday except holiday. If BellSouth determines the Secure FTP mailbox is nearing capacity levels, BellSouth may move the customer to CONNECT:Direct file delivery.

7.2.2 Data circuits (private line or dial-up) may be required between BellSouth and Access Point for the purpose of data transmission. Where a dedicated line is required, Access Point will be responsible for ordering the circuit, overseeing its installation and coordinating the installation with BellSouth. Access Point will also be responsible for any charges associated with this line. Equipment required on the BellSouth end to attach the line to the mainframe computer and to transmit successfully ongoing will be negotiated on an individual case basis. Where a dial-up facility is required, dial circuits will be installed in the BellSouth data center by BellSouth and the associated charges assessed to Access Point. Additionally, all message toll charges associated with the use of the dial circuit by Access Point will be the responsibility of Access Point. Associated equipment on the BellSouth end, including a modem, will be negotiated on an individual case basis between the Parties. All equipment, including modems and software, that is required on Access Point's end for the purpose of data transmission will be the responsibility of Access Point.

7.2.3 If Access Point utilizes FTP for data file transmission, purchase of the FTP software will be the responsibility of Access Point.

7.3 EODUF Packing Specifications

7.3.1 The data will be packed using ATIS EMI records. A pack will contain a minimum of one (1) message record or a maximum of ninety-nine thousand nine hundred and ninety-nine (99,999) message records plus a pack header record and a pack trailer record. One transmission can contain a maximum of ninety-nine (99) packs and a minimum of one (1) pack.

7.3.2 The OCN, From RAO, and Invoice Number will control the invoice sequencing. The From RAO will be used to identify to Access Point which BellSouth RAO is sending the message. BellSouth and Access Point will use the invoice sequencing

to control data exchange. BellSouth will be notified of sequence failures identified by Access Point and resend the data as appropriate.

RESALE DISCOUNTS & RATES - Alabama														Attachment: 1 Exh D			
CATEGORY		RATE ELEMENTS	Interim	Zone	BCS	USOC		RATES($)				Svc Order Submitted Elec per LSR	Svc Order Submitted Manually per LSR	Incremental Charge - Manual Svc Order vs. Electronic-1st	Incremental Charge - Manual Svc Order vs. Electronic-Add'l	Incremental Charge - Manual Svc Order vs. Electronic-Disc 1st	Incremental Charge - Manual Svc Order vs. Electronic-Disc Add'l
							Rec	Nonrecurring		Nonrecurring Disconnect		OSS Rates($)					
								First	Add'l	First	Add'l	SOMEC	SOMAN	SOMAN	SOMAN	SOMAN	SOMAN
APPLICABLE DISCOUNTS																	
		Residence %					16.30										
		Business %					16.30										
		CSAs %					16.30										
OPERATIONS SUPPORT SYSTEMS (OSS) - "REGIONAL RATES"																	
	NOTE: (1) CLEC should contact its contract negotiator if it prefers the "state specific" OSS charges as ordered by the State Commissions. The OSS charges currently contained in this rate exhibit are the BellSouth "regional" service ordering charges. CLEC may elect either the state specific Commission ordered rates for the service ordering charges, or CLEC may elect the regional service ordering charge, however, CLEC can not obtain a mixture of the two regardless if CLEC has a interconnection contract established in															
		OSS - Electronic Service Order Charge, Per Local Service Request (LSR) - Resale Only				SOMEC		3.50	0.00	3.50	0.00						
		OSS - Manual Service Order Charge, Per Local Service Request (LSR) - Resale Only				SOMAN		19.99	0.00	19.99	0.00						
ODUF/EODUF SERVICES																	
	OPTIONAL DAILY USAGE FILE (ODUF)																
		ODUF: Recording, per message					0.000011										
		ODUF: Message Processing, per message					0.004101										
		ODUF: Message Processing, per Magnetic Tape provisioned					42.67										
		ODUF: Data Transmission (CONNECT:DIRECT), per message					0.000094										
	ENHANCED OPTIONAL DAILY USAGE FILE (EODUF)																
		EODUF: Message Processing, per message					0.22										
SELECTIVE CALL ROUTING USING LINE CLASS CODES (SCR-LCC)																	
		Selective Routing Per Unique Line Class Code Per Request Per Switch						84.70	84.70	14.11	14.11						
DIRECTORY ASSISTANCE CUSTOM BRANDING ANNOUNCEMENT via OLNS SOFTWARE																	
		Recording of DA Custom Branded Announcement						3,000.00	3,000.00								
		Loading of DA Custom Branded Anouncement per Switch per OCN						1,170.00	1,170.00								
DIRECTORY ASSISTANCE UNBRANDING via OLNS SOFTWARE																	
		Loading of DA per OCN (1 OCN per Order)						420.00	420.00								
		Loading of DA per Switch per OCN						16.00	16.00								
OPERATOR ASSISTANCE CUSTOM BRANDING ANNOUNCEMENT via OLNS SOFTWARE																	
		Recording of Custom Branded OA Announcement						7,000.00	7,000.00								
		Loading of Custom Branded OA Announcement per shelf/NAV per OCN						500.00	500.00								
		Loading of OA Custom Branded Announcement per Switch per OCN						1,170.00	1,170.00								
OPERATOR ASSISTANCE UNBRANDING via OLNS SOFTWARE																	
		Loading of OA per OCN (Regional)						1,200.00	1,200.00								

RESALE DISCOUNTS & RATES - Florida

Attachment: 1 Exh D

CATEGORY	RATE ELEMENTS	Interim	Zone	BCS	USOC	Rec	RATES($) Nonrecurring First	RATES($) Nonrecurring Add'l	RATES($) Nonrecurring Disconnect First	RATES($) Nonrecurring Disconnect Add'l	Svc Order Submitted Elec per LSR	Svc Order Submitted Manually per LSR	Incremental Charge - Manual Svc Order vs. Electronic-1st	Incremental Charge - Manual Svc Order vs. Electronic-Add'l	Incremental Charge - Manual Svc Order vs. Electronic-Disc 1st	Incremental Charge - Manual Svc Order vs. Electronic-Disc Add'l
											OSS Rates($)					
							First	Add'l	First	Add'l	SOMEC	SOMAN	SOMAN	SOMAN	SOMAN	SOMAN
APPLICABLE DISCOUNTS																
	Residence %					21.83										
	Business %					16.81										
	CSAs %					16.81										
OPERATIONS SUPPORT SYSTEMS (OSS) - "REGIONAL RATES"																
	NOTE: (1) CLEC should contact its contract negotiator if it prefers the "state specific" OSS charges as ordered by the State Commissions. The OSS charges currently contained in this rate exhibit are the BellSouth "regional" service ordering charges. CLEC may elect either the state specific Commission ordered rates for the service ordering charges, or CLEC may elect the regional service ordering charge, however, CLEC can not obtain a mixture of the two regardless if CLEC has a interconnection contract established in															
	OSS - Electronic Service Order Charge, Per Local Service Request (LSR) - Resale Only				SOMEC		3.50	0.00	3.50	0.00						
	OSS - Manual Service Order Charge, Per Local Service Request (LSR) - Resale Only				SOMAN		19.99	0.00	19.99	0.00						
ODUF/EODUF SERVICES																
	OPTIONAL DAILY USAGE FILE (ODUF)															
	ODUF: Recording, per message					0.0000071										
	ODUF: Message Processing, per message					0.002146										
	ODUF: Message Processing, per Magnetic Tape provisioned					35.91										
	ODUF: Data Transmission (CONNECT:DIRECT), per message					0.00010375										
	ENHANCED OPTIONAL DAILY USAGE FILE (EODUF)															
	EODUF: Message Processing, per message					0.080698										
SELECTIVE CALL ROUTING USING LINE CLASS CODES (SCR-LCC)																
	Selective Routing Per Unique Line Class Code Per Request Per Switch						93.55	93.55	12.71	12.71						
DIRECTORY ASSISTANCE CUSTOM BRANDING ANNOUNCEMENT via OLNS SOFTWARE																
	Recording of DA Custom Branded Announcement						3,000.00	3,000.00								
	Loading of DA Custom Branded Anouncement per Switch per OCN						1,170.00	1,170.00								
DIRECTORY ASSISTANCE UNBRANDING via OLNS SOFTWARE																
	Loading of DA per OCN (1 OCN per Order)						420.00	420.00								
	Loading of DA per Switch per OCN						16.00	16.00								
OPERATOR ASSISTANCE CUSTOM BRANDING ANNOUNCEMENT via OLNS SOFTWARE																
	Recording of Custom Branded OA Announcement						7,000.00	7,000.00								
	Loading of Custom Branded OA Announcement per shelf/NAV per OCN						500.00	500.00								
	Loading of OA Custom Branded Announcement per Switch per OCN						1,170.00	1,170.00								
OPERATOR ASSISTANCE UNBRANDING via OLNS SOFTWARE																
	Loading of OA per OCN (Regional)						1,200.00	1,200.00								

RESALE DISCOUNTS & RATES - Georgia														Attachment: 1 Exh D			
CATEGORY		RATE ELEMENTS	Interim	Zone	BCS	USOC		RATES($)				Svc Order Submitted Elec per LSR	Svc Order Submitted Manually per LSR	Incremental Charge - Manual Svc Order vs. Electronic-1st	Incremental Charge - Manual Svc Order vs. Electronic-Add'l	Incremental Charge - Manual Svc Order vs. Electronic-Disc 1st	Incremental Charge - Manual Svc Order vs. Electronic-Disc Add'l
							Rec	Nonrecurring		Nonrecurring Disconnect		OSS Rates($)					
								First	Add'l	First	Add'l	SOMEC	SOMAN	SOMAN	SOMAN	SOMAN	SOMAN
APPLICABLE DISCOUNTS																	
		Residence %					20.30										
		Business %					17.30										
		CSAs %					17.30										
OPERATIONS SUPPORT SYSTEMS (OSS) - "REGIONAL RATES"																	
	NOTE: (1) CLEC should contact its contract negotiator if it prefers the "state specific" OSS charges as ordered by the State Commissions. The OSS charges currently contained in this rate exhibit are the BellSouth "regional" service ordering charges. CLEC may elect either the state specific Commission ordered rates for the service ordering charges, or CLEC may elect the regional service ordering charge, however, CLEC can not obtain a mixture of the two regardless if CLEC has a interconnection contract established in															
		OSS - Electronic Service Order Charge, Per Local Service Request (LSR) - Resale Only				SOMEC		3.50	0.00	3.50	0.00						
		OSS - Manual Service Order Charge, Per Local Service Request (LSR) - Resale Only				SOMAN		19.99	0.00	19.99	0.00						
ODUF/EODUF SERVICES																	
	OPTIONAL DAILY USAGE FILE (ODUF)																
		ODUF: Recording, per message					0.000007										
		ODUF: Message Processing, per message					0.002165										
		ODUF: Message Processing, per Magnetic Tape provisioned					36.02										
		ODUF: Data Transmission (CONNECT:DIRECT), per message					0.00010888										
	ENHANCED OPTIONAL DAILY USAGE FILE (EODUF)																
		EODUF: Message Processing, per message					0.229077										
SELECTIVE CALL ROUTING USING LINE CLASS CODES (SCR-LCC)																	
		Selective Routing Per Unique Line Class Code Per Request Per Switch						102.19	61.15	12.68	6.34						
DIRECTORY ASSISTANCE CUSTOM BRANDING ANNOUNCEMENT via OLNS SOFTWARE																	
		Recording of DA Custom Branded Announcement						3,000.00	3,000.00								
		Loading of DA Custom Branded Anouncement per Switch per OCN						1,170.00	1,170.00								
DIRECTORY ASSISTANCE UNBRANDING via OLNS SOFTWARE																	
		Loading of DA per OCN (1 OCN per Order)						420.00	420.00								
		Loading of DA per Switch per OCN						16.00	16.00								
OPERATOR ASSISTANCE CUSTOM BRANDING ANNOUNCEMENT via OLNS SOFTWARE																	
		Recording of Custom Branded OA Announcement						7,000.00	7,000.00								
		Loading of Custom Branded OA Announcement per shelf/NAV per OCN						500.00	500.00								
		Loading of OA Custom Branded Announcement per Switch per OCN						1,170.00	1,170.00								
OPERATOR ASSISTANCE UNBRANDING via OLNS SOFTWARE																	
		Loading of OA per OCN (Regional)						1,200.00	1,200.00								

RESALE DISCOUNTS & RATES - Kentucky														Attachment: 1 Exh D			
CATEGORY		RATE ELEMENTS	Interim	Zone	BCS	USOC	RATES($)					Svc Order Submitted Elec per LSR	Svc Order Submitted Manually per LSR	Incremental Charge - Manual Svc Order vs. Electronic-1st	Incremental Charge - Manual Svc Order vs. Electronic-Add'l	Incremental Charge - Manual Svc Order vs. Electronic-Disc 1st	Incremental Charge - Manual Svc Order vs. Electronic-Disc Add'l
							Rec	Nonrecurring		Nonrecurring Disconnect		OSS Rates($)					
								First	Add'l	First	Add'l	SOMEC	SOMAN	SOMAN	SOMAN	SOMAN	SOMAN
APPLICABLE DISCOUNTS																	
		Residence %					16.79										
		Business %					15.54										
		CSAs %					15.54										
OPERATIONS SUPPORT SYSTEMS (OSS) - "REGIONAL RATES"																	
	NOTE: (1) CLEC should contact its contract negotiator if it prefers the "state specific" OSS charges as ordered by the State Commissions. The OSS charges currently contained in this rate exhibit are the BellSouth "regional" service ordering charges. CLEC may elect either the state specific Commission ordered rates for the service ordering charges, or CLEC may elect the regional service ordering charge, however, CLEC can not obtain a mixture of the two regardless if CLEC has a interconnection contract established in															
		OSS - Electronic Service Order Charge, Per Local Service Request (LSR) - Resale Only				SOMEC		3.50	0.00	3.50	0.00						
		OSS - Manual Service Order Charge, Per Local Service Request (LSR) - Resale Only				SOMAN		19.99	0.00	19.99	0.00						
ODUF/EODUF SERVICES																	
	OPTIONAL DAILY USAGE FILE (ODUF)																
		ODUF: Recording, per message					0.0000136										
		ODUF: Message Processing, per message					0.002506										
		ODUF: Message Processing, per Magnetic Tape provisioned					35.90										
		ODUF: Data Transmission (CONNECT:DIRECT), per message					0.00010372										
	ENHANCED OPTIONAL DAILY USAGE FILE (EODUF)																
		EODUF: Message Processing, per message					0.235889										
DIRECTORY ASSISTANCE CUSTOM BRANDING ANNOUNCEMENT via OLNS SOFTWARE																	
		Recording of DA Custom Branded Announcement						3,000.00	3,000.00								
		Loading of DA Custom Branded Anouncement per Switch per OCN						1,170.00	1,170.00								
DIRECTORY ASSISTANCE UNBRANDING via OLNS SOFTWARE																	
		Loading of DA per OCN (1 OCN per Order)						420.00	420.00								
		Loading of DA per Switch per OCN						16.00	16.00								
OPERATOR ASSISTANCE CUSTOM BRANDING ANNOUNCEMENT via OLNS SOFTWARE																	
		Recording of Custom Branded OA Announcement						7,000.00	7,000.00								
		Loading of Custom Branded OA Announcement per shelf/NAV per OCN						500.00	500.00								
		Loading of OA Custom Branded Announcement per Switch per OCN						1,170.00	1,170.00								
OPERATOR ASSISTANCE UNBRANDING via OLNS SOFTWARE																	
		Loading of OA per OCN (Regional)						1,200.00	1,200.00								

RESALE DISCOUNTS & RATES - Louisiana														Attachment: 1 Exh D			
CATEGORY		RATE ELEMENTS	Interim	Zone	BCS	USOC	RATES($)					Svc Order Submitted Elec per LSR	Svc Order Submitted Manually per LSR	Incremental Charge - Manual Svc Order vs. Electronic-1st	Incremental Charge - Manual Svc Order vs. Electronic-Add'l	Incremental Charge - Manual Svc Order vs. Electronic-Disc 1st	Incremental Charge - Manual Svc Order vs. Electronic-Disc Add'l
							Rec	Nonrecurring		Nonrecurring Disconnect		OSS Rates($)					
								First	Add'l	First	Add'l	SOMEC	SOMAN	SOMAN	SOMAN	SOMAN	SOMAN
APPLICABLE DISCOUNTS																	
		Residence %					20.72										
		Business %					20.72										
		CSAs %					9.05										
OPERATIONS SUPPORT SYSTEMS (OSS) - "REGIONAL RATES"																	
	NOTE: (1) CLEC should contact its contract negotiator if it prefers the "state specific" OSS charges as ordered by the State Commissions. The OSS charges currently contained in this rate exhibit are the BellSouth "regional" service ordering charges. CLEC may elect either the state specific Commission ordered rates for the service ordering charges, or CLEC may elect the regional service ordering charge, however, CLEC can not obtain a mixture of the two regardless if CLEC has a interconnection contract established in															
		OSS - Electronic Service Order Charge, Per Local Service Request (LSR) - Resale Only				SOMEC		3.50	0.00	3.50	0.00						
		OSS - Manual Service Order Charge, Per Local Service Request (LSR) - Resale Only				SOMAN		19.99	0.00	19.99	0.00						
ODUF/EODUF SERVICES																	
	OPTIONAL DAILY USAGE FILE (ODUF)																
		ODUF: Recording, per message					0.0000117										
		ODUF: Message Processing, per message					0.004641										
		ODUF: Message Processing, per Magnetic Tape provisioned					48.45										
		ODUF: Data Transmission (CONNECT:DIRECT), per message					0.00010568										
	ENHANCED OPTIONAL DAILY USAGE FILE (EODUF)																
		EODUF: Message Processing, per message					0.250015										
DIRECTORY ASSISTANCE CUSTOM BRANDING ANNOUNCEMENT via OLNS SOFTWARE																	
		Recording of DA Custom Branded Announcement						3,000.00	3,000.00								
		Loading of DA Custom Branded Anouncement per Switch per OCN						1,170.00	1,170.00								
DIRECTORY ASSISTANCE UNBRANDING via OLNS SOFTWARE																	
		Loading of DA per OCN (1 OCN per Order)						420.00	420.00								
		Loading of DA per Switch per OCN						16.00	16.00								
OPERATOR ASSISTANCE CUSTOM BRANDING ANNOUNCEMENT via OLNS SOFTWARE																	
		Recording of Custom Branded OA Announcement						7,000.00	7,000.00								
		Loading of Custom Branded OA Announcement per shelf/NAV per OCN						500.00	500.00								
		Loading of OA Custom Branded Announcement per Switch per OCN						1,170.00	1,170.00								
OPERATOR ASSISTANCE UNBRANDING via OLNS SOFTWARE																	
		Loading of OA per OCN (Regional)						1,200.00	1,200.00								

RESALE DISCOUNTS & RATES - Mississippi														Attachment: 1 Exh D			
CATEGORY		RATE ELEMENTS	Interim	Zone	BCS	USOC	RATES($)					Svc Order Submitted Elec per LSR	Svc Order Submitted Manually per LSR	Incremental Charge - Manual Svc Order vs. Electronic-1st	Incremental Charge - Manual Svc Order vs. Electronic-Add'l	Incremental Charge - Manual Svc Order vs. Electronic-Disc 1st	Incremental Charge - Manual Svc Order vs. Electronic-Disc Add'l
							Rec	Nonrecurring		Nonrecurring Disconnect		OSS Rates($)					
								First	Add'l	First	Add'l	SOMEC	SOMAN	SOMAN	SOMAN	SOMAN	SOMAN
APPLICABLE DISCOUNTS																	
		Residence %					15.75										
		Business %					15.75										
		CSAs %					15.75										
OPERATIONS SUPPORT SYSTEMS (OSS) - "REGIONAL RATES"																	
	NOTE: (1) CLEC should contact its contract negotiator if it prefers the "state specific" OSS charges as ordered by the State Commissions. The OSS charges currently contained in this rate exhibit are the BellSouth "regional" service ordering charges. CLEC may elect either the state specific Commission ordered rates for the service ordering charges, or CLEC may elect the regional service ordering charge, however, CLEC can not obtain a mixture of the two regardless if CLEC has a interconnection contract established in															
		OSS - Electronic Service Order Charge, Per Local Service Request (LSR) - Resale Only				SOMEC		3.50	0.00	3.50	0.00						
		OSS - Manual Service Order Charge, Per Local Service Request (LSR) - Resale Only				SOMAN		19.99	0.00	19.99	0.00						
ODUF/EODUF SERVICES																	
	OPTIONAL DAILY USAGE FILE (ODUF)																
		ODUF: Recording, per message					0.0000063										
		ODUF: Message Processing, per message					0.004707										
		ODUF: Message Processing, per Magnetic Tape provisioned					49.04										
		ODUF: Data Transmission (CONNECT:DIRECT), per message					0.00010669										
	ENHANCED OPTIONAL DAILY USAGE FILE (EODUF)																
		EODUF: Message Processing, per message					0.250424										
DIRECTORY ASSISTANCE CUSTOM BRANDING ANNOUNCEMENT via OLNS SOFTWARE																	
		Recording of DA Custom Branded Announcement						3,000.00	3,000.00								
		Loading of DA Custom Branded Anouncement per Switch per OCN						1,170.00	1,170.00								
DIRECTORY ASSISTANCE UNBRANDING via OLNS SOFTWARE																	
		Loading of DA per OCN (1 OCN per Order)						420.00	420.00								
		Loading of DA per Switch per OCN						16.00	16.00								
OPERATOR ASSISTANCE CUSTOM BRANDING ANNOUNCEMENT via OLNS SOFTWARE																	
		Recording of Custom Branded OA Announcement						7,000.00	7,000.00								
		Loading of Custom Branded OA Announcement per shelf/NAV per OCN						500.00	500.00								
		Loading of OA Custom Branded Announcement per Switch per OCN						1,170.00	1,170.00								
OPERATOR ASSISTANCE UNBRANDING via OLNS SOFTWARE																	
		Loading of OA per OCN (Regional)						1,200.00	1,200.00								

RESALE DISCOUNTS & RATES - North Carolina														Attachment: 1 Exh D			
CATEGORY		RATE ELEMENTS	Interim	Zone	BCS	USOC		RATES($)				Svc Order Submitted Elec per LSR	Svc Order Submitted Manually per LSR	Incremental Charge - Manual Svc Order vs. Electronic-1st	Incremental Charge - Manual Svc Order vs. Electronic-Add'l	Incremental Charge - Manual Svc Order vs. Electronic-Disc 1st	Incremental Charge - Manual Svc Order vs. Electronic-Disc Add'l
							Rec	Nonrecurring		Nonrecurring Disconnect		OSS Rates($)					
								First	Add'l	First	Add'l	SOMEC	SOMAN	SOMAN	SOMAN	SOMAN	SOMAN
APPLICABLE DISCOUNTS																	
		Residence %					21.50										
		Business %					17.60										
		CSAs %					17.60										
OPERATIONS SUPPORT SYSTEMS (OSS) - "REGIONAL RATES"																	
	NOTE: (1) CLEC should contact its contract negotiator if it prefers the "state specific" OSS charges as ordered by the State Commissions. The OSS charges currently contained in this rate exhibit are the BellSouth "regional" service ordering charges. CLEC may elect either the state specific Commission ordered rates for the service ordering charges, or CLEC may elect the regional service ordering charge, however, CLEC can not obtain a mixture of the two regardless if CLEC has a interconnection contract established in															
		OSS - Electronic Service Order Charge, Per Local Service Request (LSR) - Resale Only				SOMEC		3.50	0.00	3.50	0.00						
		OSS - Manual Service Order Charge, Per Local Service Request (LSR) - Resale Only				SOMAN		19.99	0.00	19.99	0.00						
ODUF/EODUF SERVICES																	
	OPTIONAL DAILY USAGE FILE (ODUF)																
		ODUF: Recording, per message					0.0000174										
		ODUF: Message Processing, per message					0.001647										
		ODUF: Message Processing, per Magnetic Tape provisioned					35.91										
		ODUF: Data Transmission (CONNECT:DIRECT), per message					0.00011029										
	ENHANCED OPTIONAL DAILY USAGE FILE (EODUF)																
		EODUF: Message Processing, per message					0.131005										
SELECTIVE CALL ROUTING USING LINE CLASS CODES (SCR-LCC)																	
		Selective Routing Per Unique Line Class Code Per Request Per Switch						188.59									
DIRECTORY ASSISTANCE CUSTOM BRANDING ANNOUNCEMENT via OLNS SOFTWARE																	
		Recording of DA Custom Branded Announcement						3,000.00	3,000.00								
		Loading of DA Custom Branded Anouncement per Switch per OCN						1,170.00	1,170.00								
DIRECTORY ASSISTANCE UNBRANDING via OLNS SOFTWARE																	
		Loading of DA per OCN (1 OCN per Order)						420.00	420.00								
		Loading of DA per Switch per OCN						16.00	16.00								
OPERATOR ASSISTANCE CUSTOM BRANDING ANNOUNCEMENT via OLNS SOFTWARE																	
		Recording of Custom Branded OA Announcement						7,000.00	7,000.00								
		Loading of Custom Branded OA Announcement per shelf/NAV per OCN						500.00	500.00								
		Loading of OA Custom Branded Announcement per Switch per OCN						1,170.00	1,170.00								
OPERATOR ASSISTANCE UNBRANDING via OLNS SOFTWARE																	
		Loading of OA per OCN (Regional)						1,200.00	1,200.00								

RESALE DISCOUNTS & RATES - South Carolina														Attachment: 1 Exh D			
CATEGORY		RATE ELEMENTS	Interim	Zone	BCS	USOC		RATES($)				Svc Order Submitted Elec per LSR	Svc Order Submitted Manually per LSR	Incremental Charge - Manual Svc Order vs. Electronic-1st	Incremental Charge - Manual Svc Order vs. Electronic-Add'l	Incremental Charge - Manual Svc Order vs. Electronic-Disc 1st	Incremental Charge - Manual Svc Order vs. Electronic-Disc Add'l
							Rec	Nonrecurring		Nonrecurring Disconnect		OSS Rates($)					
								First	Add'l	First	Add'l	SOMEC	SOMAN	SOMAN	SOMAN	SOMAN	SOMAN
APPLICABLE DISCOUNTS																	
		Residence %					14.80										
		Business %					14.80										
		CSAs %					8.98										
OPERATIONS SUPPORT SYSTEMS (OSS) - "REGIONAL RATES"																	
	NOTE: (1) CLEC should contact its contract negotiator if it prefers the "state specific" OSS charges as ordered by the State Commissions. The OSS charges currently contained in this rate exhibit are the BellSouth "regional" service ordering charges. CLEC may elect either the state specific Commission ordered rates for the service ordering charges, or CLEC may elect the regional service ordering charge, however, CLEC can not obtain a mixture of the two regardless if CLEC has a interconnection contract established in															
		OSS - Electronic Service Order Charge, Per Local Service Request (LSR) - Resale Only				SOMEC		3.50	0.00	3.50	0.00						
		OSS - Manual Service Order Charge, Per Local Service Request (LSR) - Resale Only				SOMAN		19.99	0.00	19.99	0.00						
ODUF/EODUF SERVICES																	
	OPTIONAL DAILY USAGE FILE (ODUF)																
		ODUF: Recording, per message					0.0000216										
		ODUF: Message Processing, per message					0.004704										
		ODUF: Message Processing, per Magnetic Tape provisioned					48.87										
		ODUF: Data Transmission (CONNECT:DIRECT), per message					0.00010863										
	ENHANCED OPTIONAL DAILY USAGE FILE (EODUF)																
		EODUF: Message Processing, per message					0.258301										
SELECTIVE CALL ROUTING USING LINE CLASS CODES (SCR-LCC)																	
		Selective Routing Per Unique Line Class Code Per Request Per Switch						84.89	84.89	14.14	14.14						
DIRECTORY ASSISTANCE CUSTOM BRANDING ANNOUNCEMENT via OLNS SOFTWARE																	
		Recording of DA Custom Branded Announcement						3,000.00	3,000.00								
		Loading of DA Custom Branded Anouncement per Switch per OCN						1,170.00	1,170.00								
DIRECTORY ASSISTANCE UNBRANDING via OLNS SOFTWARE																	
		Loading of DA per OCN (1 OCN per Order)						420.00	420.00								
		Loading of DA per Switch per OCN						16.00	16.00								
OPERATOR ASSISTANCE CUSTOM BRANDING ANNOUNCEMENT via OLNS SOFTWARE																	
		Recording of Custom Branded OA Announcement						7,000.00	7,000.00								
		Loading of Custom Branded OA Announcement per shelf/NAV per OCN						500.00	500.00								
		Loading of OA Custom Branded Announcement per Switch per OCN						1,170.00	1,170.00								
OPERATOR ASSISTANCE UNBRANDING via OLNS SOFTWARE																	
		Loading of OA per OCN (Regional)						1,200.00	1,200.00								

RESALE DISCOUNTS & RATES - Tennessee														Attachment: 1 Exh D			
CATEGORY		RATE ELEMENTS	Interim	Zone	BCS	USOC	RATES($)					Svc Order Submitted Elec per LSR	Svc Order Submitted Manually per LSR	Incremental Charge - Manual Svc Order vs. Electronic-1st	Incremental Charge - Manual Svc Order vs. Electronic-Add'l	Incremental Charge - Manual Svc Order vs. Electronic-Disc 1st	Incremental Charge - Manual Svc Order vs. Electronic-Disc Add'l
							Rec	Nonrecurring		Nonrecurring Disconnect		OSS Rates($)					
								First	Add'l	First	Add'l	SOMEC	SOMAN	SOMAN	SOMAN	SOMAN	SOMAN
APPLICABLE DISCOUNTS																	
		Residence %					16.00										
		Business %					16.00										
		CSAs %					16.00										
OPERATIONS SUPPORT SYSTEMS (OSS) - "REGIONAL RATES"																	
	NOTE: (1) CLEC should contact its contract negotiator if it prefers the "state specific" OSS charges as ordered by the State Commissions. The OSS charges currently contained in this rate exhibit are the BellSouth "regional" service ordering charges. CLEC may elect either the state specific Commission ordered rates for the service ordering charges, or CLEC may elect the regional service ordering charge, however, CLEC can not obtain a mixture of the two regardless if CLEC has a interconnection contract established in															
		OSS - Electronic Service Order Charge, Per Local Service Request (LSR) - Resale Only				SOMEC		3.50	0.00	3.50	0.00						
		OSS - Manual Service Order Charge, Per Local Service Request (LSR) - Resale Only				SOMAN		19.99	0.00	19.99	0.00						
ODUF/EODUF SERVICES																	
	OPTIONAL DAILY USAGE FILE (ODUF)																
		ODUF: Recording, per message					0.0000044										
		ODUF: Message Processing, per message					0.002446										
		ODUF: Message Processing, per Magnetic Tape provisioned					35.54										
		ODUF: Data Transmission (CONNECT:DIRECT), per message					0.0000339										
	ENHANCED OPTIONAL DAILY USAGE FILE (EODUF)																
		EODUF: Message Processing, per message					0.229779										
DIRECTORY ASSISTANCE CUSTOM BRANDING ANNOUNCEMENT via OLNS SOFTWARE																	
		Recording of DA Custom Branded Announcement						3,000.00									
		Loading of DA Custom Branded Anouncement per Switch per OCN						1,170.00									
DIRECTORY ASSISTANCE UNBRANDING via OLNS SOFTWARE																	
		Loading of DA per OCN (1 OCN per Order)						420.00	420.00								
		Loading of DA per Switch per OCN						16.00	16.00								
OPERATOR ASSISTANCE CUSTOM BRANDING ANNOUNCEMENT via OLNS SOFTWARE																	
		Recording of Custom Branded OA Announcement						7,000.00	7,000.00								
		Loading of Custom Branded OA Announcement per shelf/NAV per OCN						500.00	500.00								
		Loading of OA Custom Branded Announcement per Switch per OCN						1,170.00	1,170.00								
OPERATOR ASSISTANCE UNBRANDING via OLNS SOFTWARE																	
		Loading of OA per OCN (Regional)						1,200.00	1,200.00								

Attachment 2

Network Elements and Other Services

TABLE OF CONTENTS

1 Introduction **3**
2 Loops **8**
3 Line Splitting **26**
4 Unbundled Network Element Combinations **27**
5 Dedicated Transport and Dark Fiber Transport **30**
6 Automatic Location Identification/Data Management System (ALI/DMS) **38**
7 White Pages Listings **39**
8 FL COL Language ..... **Exhibit 1**
9 NC COL Language ..... **Exhibit 2**
10 SC COL Language ..... **Exhibit 3**
11 GA COL Language ..... **Exhibit 4**
12 GA COL 271 Rates ..... **Exhibit 4**
13 AL COL Language ..... **Exhibit 5**
Rates ..... **Exhibit A**
Rates ..... **Exhibit B**

ACCESS TO NETWORK ELEMENTS AND OTHER SERVICES

1 Introduction

1.1 This Attachment sets forth rates, terms and conditions for unbundled Network Elements (Network Elements) and combinations of Network Elements (Combinations) that BellSouth offers to Access Point for Access Point's provision of Telecommunications Services in accordance with its obligations under Section 251(c)(3) of the Act. Additionally, this Attachment sets forth the rates, terms and conditions for other facilities and services BellSouth makes available to Access Point (Other Services). Additionally, the provision of a particular Network Element or Other Service may require Access Point to purchase other Network Elements or services. In the event of a conflict between this Attachment and any other section or provision of this Agreement, the provisions of this Attachment shall control.

1.1.1 The state specific provisions set forth in Exhibits 1 through 5, attached hereto, shall apply to services provided in each respective state. To the extent that any provision set forth in Exhibits 1 through 5 conflicts with any other provision set forth in this Agreement, the provision contained in the Exhibit shall control in the applicable state.

1.2 The rates for each Network Element, Combinations and Other Services are set forth in Exhibits A and B. If no rate is identified in this Agreement, the rate will be as set forth in the applicable BellSouth tariff or as negotiated by the Parties upon request by either Party. If Access Point purchases service(s) from a tariff, all terms and conditions and rates as set forth in such tariff shall apply. Fractionalized billing shall apply to all Network Elements and Combinations such that recurring charges will be prorated based upon the number of days that the Network Elements or Combinations are in service.

1.3 Access Point may purchase and use Network Elements and Other Services from BellSouth in accordance with 47 C.F.R § 51.309. BellSouth shall place no use restrictions or other limiting conditions on Network Elements and combinations purchased by Access Point except as set forth under this Agreement.

1.4 The Parties shall comply with the requirements as set forth in the technical references within this Attachment 2.

1.5 Access Point shall not obtain a Network Element for the exclusive provision of mobile wireless services or interexchange services.

1.6 <u>Conversion of Wholesale Services to Network Elements or Network Elements to Wholesale Services.</u> Upon request, BellSouth shall convert a wholesale service, or group of wholesale services, to the equivalent Network Element or Combination that is available to Access Point pursuant to Section 251 of the Act and under this Agreement or convert a Network Element or Combination that is available to Access Point pursuant to Section 251 of the Act and under this

Agreement to an equivalent wholesale service or group of wholesale services offered by BellSouth (collectively "Conversion"). The conversion process should be a seamless process that does not affect the customer's perception of service quality. BellSouth shall charge the applicable nonrecurring switch-as-is rates for Conversions to specific Network Elements or Combinations found in Exhibit A. BellSouth shall also charge the same nonrecurring switch-as-is rates when converting from Network Elements or Combinations. Any rate change resulting from the Conversion will be effective as of the next billing cycle following BellSouth's receipt of a complete and accurate Conversion request from Access Point. A Conversion shall be considered termination for purposes of any volume and/or term commitments and/or grandfathered status between Access Point and BellSouth. Any change from a wholesale service/group of wholesale services to a Network Element/Combination, or from a Network Element/Combination to a wholesale service/group of wholesale services, that requires a physical rearrangement will not be considered to be a Conversion for purposes of this Agreement. BellSouth will not require physical rearrangements if the Conversion can be completed through record changes only. Orders for Conversions will be handled in accordance with the guidelines set forth in the Ordering Guidelines and Processes and CLEC Information Packages as referenced in Sections 1.13.1 and 1.13.2 below.

1.7 Except to the extent expressly provided otherwise in this Attachment, Access Point may not maintain unbundled Network Elements or combinations of unbundled Network Elements, that are no longer offered pursuant to this Agreement (collectively "Arrangements"). In the event BellSouth determines that Access Point has in place any Arrangements after the Effective Date of this Agreement, BellSouth will provide Access Point with thirty (30) days written notice to disconnect or convert such Arrangements. If Access Point fails to submit orders to disconnect or convert such Arrangements within such thirty (30) day period, BellSouth will transition such circuits to the equivalent tariffed BellSouth service(s). Those circuits identified and transitioned by BellSouth pursuant to this Section 1.7 shall be subject to all applicable disconnect charges as set forth in this Agreement and the full nonrecurring charges for installation of the equivalent tariffed BellSouth service as set forth in BellSouth's tariffs. The applicable recurring tariff charge shall apply to each circuit as of the Effective Date of this Agreement.

1.8 Prior to submitting an order pursuant to this Agreement for high capacity (DS1 or above) Dedicated Transport or high capacity Loops, Access Point shall undertake a reasonably diligent inquiry to determine whether Access Point is entitled to unbundled access to such Network Elements in accordance with the terms of this Agreement. By submitting any such order, Access Point self-certifies that to the best of Access Point's knowledge, the high capacity Dedicated Transport or high capacity Loop requested is available as a Network Element pursuant to this Agreement. Upon receiving such order, BellSouth shall process the request in reliance upon Access Point's self-certification. To the extent BellSouth believes

that such request does not comply with the terms of this Agreement, BellSouth shall seek dispute resolution in accordance with the General Terms and Conditions of this Agreement. In the event such dispute is resolved in BellSouth's favor, BellSouth shall bill Access Point the difference between the rates for such circuits pursuant to this Agreement and the applicable nonrecurring and recurring charges for the equivalent tariffed service from the date of installation to the date the circuit is transitioned to the equivalent tariffed service. Within thirty (30) days following a decision finding in BellSouth's favor, Access Point shall submit a spreadsheet identifying those non-compliant circuits to be transitioned to tariffed services or disconnected.

1.9 Access Point may utilize Network Elements and Other Services to provide services in accordance with this Agreement, as long as such services are consistent with industry standards and applicable BellSouth Technical References.

1.10 BellSouth will perform Routine Network Modifications (RNM) in accordance with FCC 47 C.F.R. § 51.319 (a)(7) and (e)(4) for Loops and Dedicated Transport provided under this Attachment. If BellSouth has anticipated such RNM and performs them during normal operations and has recovered the costs for performing such modifications through the rates set forth in Exhibit A, then BellSouth shall perform such RNM at no additional charge. RNM shall be performed within the intervals established for the Network Element and subject to the performance measurements and associated remedies set forth in Attachment 9 to the extent such RNM were anticipated in the setting of such intervals. If BellSouth has not anticipated a requested network modification as being a RNM and has not recovered the costs of such RNM in the rates set forth in Exhibit A, then such request will be handled as a project on an individual case basis. BellSouth will provide a price quote for the request and, upon receipt of payment from Access Point, BellSouth shall perform the RNM.

1.11 <u>Commingling of Services</u>

1.11.1 Commingling means the connecting, attaching, or otherwise linking of a Network Element, or a Combination, to one or more Telecommunications Services or facilities that Access Point has obtained at wholesale from BellSouth, including any service offered for resale pursuant to Section 251(c)(4) of the Act,or the combining of a Network Element or Combination with one or more such wholesale Telecommunications Services or facilities. Access Point must comply with all rates, terms or conditions applicable to such wholesale Telecommunications Services or facilities.

1.11.2 Subject to the limitations set forth elsewhere in this Attachment, BellSouth shall not deny access to a Network Element or a Combination on the grounds that one or more of the elements: (1) is connected to, attached to, linked to, or combined with such a facility or service obtained from BellSouth; (2) shares part of BellSouth's network with access services or inputs for mobile wireless services and/or interexchange services

1.11.3 BellSouth shall provide Access Point Network Elements and Combinations in a manner that allows Access Point to combine such Network Elements and Combinations with other services provided by Access Point or third parties to provide telecommunications services.

1.11.4 Unless otherwise agreed to by the Parties, the Network Element portion of a commingled circuit will be billed at the rates set forth in this Agreement and the remainder of the circuit or service will be billed in accordance with BellSouth's tariffed rates or rates set forth in a separate agreement between the Parties.

1.11.5 When multiplexing equipment is attached to a commingled circuit, BellSouth will bill Access Point for multiplexing according to the underlying product consistent with what is ordered by Access Point. For example, if Access Point orders unbundled transport with multiplexing, BellSouth will charge Access Point the unbundled rate for multiplexing. If Access Point orders special access transport with multiplexing, BellSouth will charge Access Point the special access rate for multiplexing. Central Office Channel Interfaces (COCI) will be billed from the same agreement or tariff as the lower bandwidth circuit.

1.11.6 Notwithstanding any other provision of this Agreement, BellSouth shall not be obligated to commingle or combine Network Elements or Combinations with any service, network element or other offering that it is obligated to make available only pursuant to Section 271 of the Act.

1.12 Terms and conditions for order cancellation charges and Service Date Advancement Charges will apply in accordance with Attachment 6 and are incorporated herein by this reference. The charges shall be as set forth in Exhibit A.

1.13 <u>Ordering Guidelines and Processes</u>

1.13.1 For information regarding Ordering Guidelines and Processes for various Network Elements, Combinations and Other Services, Access Point should refer to the "Guides" section of the BellSouth Interconnection Web site.

1.13.2 Additional information may also be found in the individual CLEC Information Packages, located at the "CLEC UNE Products" on BellSouth's Interconnection Web site at: http://www.interconnection.bellsouth.com/guides/html/unes.html.

1.13.3 The provisioning of Network Elements, Combinations and Other Services to Access Point's Collocation Space will require cross-connections within the central office to connect the Network Element, Combinations or Other Services to the demarcation point associated with Access Point's Collocation Space or the Collocation Space of third party carriers providing services to Access Point. These cross-connects are separate components that are not considered a part of the Network Element, Combinations or Other Services and, thus, have a separate charge pursuant to Attachment 4

1.13.4 <u>Testing/Trouble Reporting</u>

1.13.4.1 Access Point will be responsible for testing and isolating troubles on Network Elements. Access Point must test and isolate trouble to the BellSouth network before reporting the trouble to the UNE Customer Wholesale Interconnection Network Services (CWINS) Center. Upon request from BellSouth at the time of the trouble report, Access Point will be required to provide the results of the Access Point test which indicate a problem on the BellSouth network.

1.13.4.2 Once Access Point has isolated a trouble to the BellSouth network, and has issued a trouble report to BellSouth, BellSouth will take the actions necessary to repair the Network Element when trouble is found. BellSouth will repair its network facilities to its wholesale customers in the same time frames that BellSouth repairs similar services to its retail customers.

1.13.4.3 If Access Point reports a trouble on a BellSouth Network Element and no trouble is found in BellSouth's network, BellSouth will charge Access Point the rates set forth in Exhibit A for any dispatching and testing both inside and outside the Central Office (CO) required by BellSouth in order to confirm the working status. If Access Point reports the same trouble on the same Network Elements or other service within 30 days of the original trouble report and BellSouth is able to determine that such trouble was caused by trouble on BellSouth's network, then Access Point may utilize the Billing Dispute Resolution process to remove the prior charges associated with the prior trouble report

1.13.4.4 In the event BellSouth must dispatch to the customer's location more than once due to incorrect or incomplete information provided by Access Point (e.g., incomplete address, incorrect contact name/number, etc.), BellSouth will bill Access Point for each additional dispatch required to repair the Network Element due to the incorrect/incomplete information provided. BellSouth will assess the applicable Maintenance of Service rates from BellSouth's FCC No.1 Tariff, Section 13.3.1.

2 Loops

2.1 General. The local loop Network Element is defined as a transmission facility that BellSouth provides pursuant to this Attachment between a distribution frame (or its equivalent) in BellSouth's central office and the loop demarcation point at a customer premises (Loop). Facilities that do not terminate at a demarcation point at a customer premises, including, by way of example, but not limited to, facilities that terminate to another carrier's switch or premises, a cell site, Mobile Switching Center or base station, do not constitute local Loops. The Loop Network Element includes all features, functions, and capabilities of the transmission facilities, including the network interface device, and attached electronics (except those used for the provision of advanced services, such as Digital Subscriber Line Access Multiplexers (DSLAMs)), optronics and intermediate devices (including repeaters and load coils) used to establish the transmission path to the customer's premises, including inside wire owned or controlled by BellSouth. Access Point shall purchase the entire bandwidth of the

Loop and, except as required herein or as otherwise agreed to by the Parties, BellSouth shall not subdivide the frequency of the Loop.

2.1.1 The Loop does not include any packet switched features, functions or capabilities.

2.1.2 Fiber to the Home (FTTH) loops are local loops consisting entirely of fiber optic cable, whether dark or lit, serving an customer's premises or, in the case of predominantly residential multiple dwelling units (MDUs), a fiber optic cable, whether dark or lit, that extends to the MDU minimum point of entry (MPOE). Fiber to the Curb (FTTC) loops are local loops consisting of fiber optic cable connecting to a copper distribution plant that is not more than five hundred (500) feet from the customer's premises or, in the case of predominantly residential MDUs, not more than five hundred (500) feet from the MDU's MPOE. The fiber optic cable in a FTTC loop must connect to a copper distribution plant at a serving area interface from which every other copper distribution subloop also is not more than five hundred (500) feet from the respective customer's premises.

2.1.2.1 In new build (Greenfield) areas, where BellSouth has only deployed FTTH/FTTC facilities, BellSouth is under no obligation to provide access to such FTTH and FTTC Loops when BellSouth deploys such a loop to an end user customer premises that previously has not been served by any Loop facility. FTTH facilities include fiber loops deployed to the MPOE of a MDU that is predominantly residential regardless of the ownership of the inside wiring from the MPOE to each customer in the MDU.

2.1.2.2 In FTTH/FTTC overbuild situations where BellSouth also has copper Loops, BellSouth will make those copper Loops available to Access Point on an unbundled basis, until such time as BellSouth chooses to retire those copper Loops using the FCC's network disclosure requirements. In these cases, BellSouth will offer a sixty-four (64) kilobits per second (kbps) second voice grade channel over its FTTH/FTTC facilities.

2.1.2.3 Furthermore, in FTTH/FTTC overbuild areas where BellSouth has not yet retired copper facilities, BellSouth is not obligated to ensure that such copper Loops in that area are capable of transmitting signals prior to receiving a request for access to such Loops by Access Point. If a request is received by BellSouth for a copper Loop, and the copper facilities have not yet been retired, BellSouth will restore the copper Loop to serviceable condition if technically feasible. In these instances of Loop orders in an FTTH/FTTC overbuild area, BellSouth's standard Loop provisioning interval, will apply to those copper loops that BellSouth continues to maintain. For those copper loops that BellSouth has not continued to maintain, BellSouth will use commercially reasonable efforts to meet the standard provisioning interval. Where BellSouth cannot meet the standard provisioning interval the order will be handled on a project basis by which the Parties will negotiate the applicable provisioning interval.

2.1.3 A hybrid Loop is a local Loop, composed of both fiber optic cable, usually in the feeder plant, and copper twisted wire or cable, usually in the distribution plant.

When Access Point seeks access to a hybrid loop for the provision of broadband services, BellSouth shall provide Access Point with nondiscriminatory access to the time division multiplexing features, functions and capabilities of such hybrid Loop, including DS1 or DS3 on an unbundled basis to establish a complete transmission path between BellSouth's central office and a customer's premises.

2.1.3.1 When Access Point seeks access to a hybrid loop for the provision of narrowband services, BellSouth shall either provide non-discriminatory access to an entire hybrid loop capable of voice grade services (i.e. equivalent to DS0 capacity) using time division multiplexing technology or provide non-discriminatory access to a spare home run copper loop serving that customer on an unbundled basis.

2.1.4 <u>DS1 and DS3 Loop Requirements</u>

2.1.4.1 For purposes of this Section 2, a Business Line is defined in 47 C.F.R. § 51.5

2.1.4.2 Notwithstanding anything to the contrary in this Agreement, and except as set forth in Section 2.1.4.12 below, BellSouth shall make available DS1 and DS3 Loops as described in this Section 2.1.4 except as described below:

2.1.4.2.1 DS1 Loops at any location within the service area of a wire center containing sixty thousand (60,000) or more Business Lines and four (4) or more fiber-based collocators.

2.1.4.2.2 DS3 Loops at any location within the service area of a wire center containing thirty-eight thousand (38,000) or more Business Lines and four (4) or more fiber-based collocators.

2.1.4.3 A list of wire centers meeting the criteria set forth in Sections 2.1.4.2.1 and 2.1.4.2.2 above as of March 10, 2005 (Initial Wire Center List), is available on BellSouth's Interconnection Services Web site.

2.1.4.4 Once a wire center exceeds both of the thresholds set forth in Section 2.1.4.2.1 above, no future DS1 Loop unbundling will be required in that wire center.

2.1.4.5 Once a wire center exceeds both of the thresholds set forth in Section 2.1.4.2.2 above, no future DS3 Loop unbundling will be required in that wire center.

2.1.4.6 <u>Modifications and Updates to the Wire Center List and Subsequent Transition Periods</u>

2.1.4.6.1 In the event BellSouth identifies additional wire centers that meet the criteria set forth in Section 2.1.4.2 above but that were not included in the Initial Wire Center List, BellSouth shall include such additional wire centers in a carrier notification letter (CNL). Each such list of additional wire centers shall be considered a "Subsequent Wire Center List".

2.1.4.6.2 Effective fourteen (14) days after the date of a BellSouth CNL providing a Subsequent Wire Center List, BellSouth shall not be required to unbundle DS1 and/or DS3 Loops, as applicable, in such additional wire center(s), except pursuant to the self-certification process as set forth in Section 1.8 above.

2.1.4.6.3 For purposes of Section 2.1.4.6 above, BellSouth shall make available DS1 and DS3 Loops that were in service for Access Point in a wire center on the Subsequent Wire Center List as of the fourteenth (14th) day after the date of BellSouth's CNL identifying the Subsequent Wire Center List (Subsequent Embedded Base) until one hundred and twenty (120) days after the fourteenth (14th) day from the date of BellSouth's CNL identifying the Subsequent Wire Center List (Subsequent Transition Period).

2.1.4.6.4 Subsequent disconnects or loss of customers shall be removed from the Subsequent Embedded Base.

2.1.4.6.5 The rates set forth in Exhibit B shall apply to the Subsequent Embedded Base during the Subsequent Transition Period.

2.1.4.6.6 No later than sixty (60) days from BellSouth's CNL identifying the Subsequent Wire Center List, Access Point shall submit a spreadsheet(s) identifying the Subsequent Embedded Base of circuits to be disconnected or converted to other BellSouth services. The Parties agree to work cooperatively to confirm that the facilities on the spreadsheet(s) are the facilities to be included in Access Point's Subsequent Embedded Base. The Parties shall negotiate a project schedule for the Conversion of the Subsequent Embedded Base. BellSouth shall charge the non-recurring switch-as-is rate for these conversions.

2.1.4.6.6.1 If Access Point fails to submit the spreadsheet(s) specified in Section 2.1.4.6.6 above for at least 95% of its Subsequent Embedded Base within sixty (60) days after the date of BellSouth's CNL identifying the Subsequent Wire Center List, BellSouth will identify Access Point's remaining Subsequent Embedded Base, if any, and will transition such circuits to the equivalent tariffed BellSouth service(s). Those circuits identified and transitioned by BellSouth shall be subject to the applicable disconnect charges as set forth in this Agreement and the full nonrecurring charges for installation of the equivalent tariffed BellSouth service as set forth in BellSouth's tariffs. If it is determined that Access Point failed to submit spreadsheets or convert 5% or less of its Subsequent Embedded Base, BellSouth will not convert such 5% or less of Access Point's Subsequent Embedded Base, but will alert Access Point of the 5% or less of its Subsequent Embedded Base that was not converted by Access Point and allow Access Point thirty (30) days to convert such 5% or less of its Subsequent Embedded Base. To the extent Access Point fails to convert the remaining Subsequent Embedded Base within such thirty (30) day period, BellSouth will identify and transition such circuits as described in this paragraph.

2.1.4.6.6.2 For Subsequent Embedded Base circuits converted pursuant to Section 2.1.4.6.6 above or transitioned pursuant to Section 2.1.4.6.6.1 above, the applicable recurring tariff charges shall apply as of the earlier of the date each circuit is converted or transitioned, as applicable, or the first day after the end of the Subsequent Transition Period.

2.1.5 Where facilities are available, BellSouth will install Loops in compliance with BellSouth's Products and Services Interval Guide available at BellSouth's

Interconnection Web site. For an order of fifteen (15) or more Loops at one location, the installation and any applicable Order Coordination (OC) as described below will be handled on a project basis, and the intervals will be set by the BellSouth project manager for that order. When Loops require a Service Inquiry (SI) prior to issuing the order to determine if facilities are available, the interval for the SI process is separate from the installation interval.

2.1.6 The Loop shall be provided to Access Point in accordance with BellSouth's TR73600 Unbundled Local Loop Technical Specification and applicable industry standard technical references.

2.1.7 BellSouth will only provision, maintain and repair the Loops to the standards that are consistent with the type of Loop ordered. Such standards shall apply at parity with BellSouth for the same loop types.

2.1.7.1 When a BellSouth technician is required to be dispatched to provision the Loop, BellSouth will tag the Loop with the Circuit ID number and the name of the ordering CLEC at no charge to the CLEC. When a dispatch is not required to provision the Loop, BellSouth will tag the Loop on the next required visit to the customer's location at no charge to the CLEC unless the dispatch was a result of a reported trouble and no trouble was found in which case BellSouth will apply the appropriate charges to the CLEC. If Access Point wants to ensure the Loop is tagged during the provisioning process for Loops that may not require a dispatch (e.g., UVL-SL1, UVL-SL2, and UCL-ND), Access Point may order Loop Tagging. Rates for Loop Tagging are as set forth in Exhibit A.

2.1.7.2 For voice grade Loop orders (or orders for Loops intended to provide voice grade services), Access Point shall have dial-tone available for that Loop forty-eight (48) hours prior to the Loop order completion due date.

2.1.8 <u>OC and Order Coordination-Time Specific (OC-TS)</u>

2.1.8.1 OC allows BellSouth and Access Point to coordinate the installation of the SL2 Loops, Unbundled Digital Loops (UDL) and other Loops where OC may be purchased as an option, to Access Point's facilities to limit customer service outage. OC is available when the Loop is provisioned over an existing circuit that is currently providing service to the customer. OC for physical conversions will be scheduled at BellSouth's discretion during normal working hours on the committed due date. OC shall be provided in accordance with the chart set forth below.

2.1.8.2 OC-TS allows Access Point to order a specific time for OC to take place. BellSouth will make commercially reasonable efforts to accommodate Access Point's specific conversion time request. However, BellSouth reserves the right to negotiate with Access Point a conversion time based on load and appointment control when necessary. This OC-TS is a chargeable option for all Loops except Unbundled Copper Loops (UCL) and is billed in addition to the OC charge. Access Point may specify a time between 9:00 a.m. and 4:00 p.m. (location time) Monday through Friday (excluding holidays). If Access Point specifies a time

outside this window, or selects a time or quantity of Loops that requires BellSouth technicians to work outside normal work hours, overtime charges will apply in addition to the OC and OC-TS charges. Overtime charges will be applied based on the amount of overtime worked and in accordance with the rates established in BellSouth's intrastate Access Services Tariff, Section E13.2, for each state. The OC-TS charges for an order due on the same day at the same location will be applied on a per LSR basis.

2.1.9

	Order Coordination (OC)	**Order Coordination – Time Specific (OC-TS)**	**Test Points**	**DLR**	**Charge for Dispatch and Testing if No Trouble Found**
SL-1 (Non-Designed)	Chargeable Option	Chargeable Option	Not available	Chargeable Option – ordered as Engineering Information Document	Charged for Dispatch inside and outside Central Office
UCL-ND (Non-Designed)	Chargeable Option	Not Available	Not Available	Chargeable Option – ordered as Engineering Information Document	Charged for Dispatch inside and outside Central Office
Unbundled Voice Loops - SL-2 (including 2- and 4-wire UVL) (Designed)	Included	Chargeable Option	Included	Included	Charged for Dispatch outside Central Office
Unbundled Digital Loop (Designed)	Included	Chargeable Option	Included (where appropriate)	Included	Charged for Dispatch outside Central Office
Unbundled Copper Loop (Designed)	Chargeable in accordance with Section 2	Not available	Included	Included	Charged for Dispatch outside Central Office
For UVL-SL1 and UCLs, Access Point must order and will be billed for both OC and OC-TS if requesting OC-TS.					

2.1.10 <u>CLEC to CLEC Conversions for Unbundled Loops</u>

2.1.10.1 The CLEC to CLEC conversion process for Loops may be used by Access Point when converting an existing Loop from another CLEC for the same customer. The Loop type being converted must be included in Access Point's Agreement before requesting a conversion.

2.1.10.2 To utilize the CLEC to CLEC conversion process, the Loop being converted must be the same Loop type with no requested changes to the Loop, must serve the same customer location from the same serving wire center, and must not require an outside dispatch to provision.

2.1.10.3 The Loops converted to Access Point pursuant to the CLEC to CLEC conversion process shall be provisioned in the same manner and with the same functionality and options as described in this Agreement for the specific Loop type.

2.1.11 Bulk Migration

2.1.11.1 BellSouth will make available to Access Point a Bulk Migration process pursuant to which Access Point may request to migrate port/loop combinations, provisioned pursuant to a separate agreement between the parties, to Loops (UNE-L). The Bulk Migration process may be used if such loop/port combinations are (1) associated with two (2) or more Existing Account Telephone Numbers (EATNs); and (2) located in the same Central Office. The terms and conditions for use of the Bulk Migration process are described in the BellSouth CLEC Information Package. The CLEC Information Package is located on BellSouth's Interconnection Web site: www.interconnection.bellsouth.com/guides/html/unes.html. The rates for the Bulk Migration process shall be the nonrecurring rates associated with the Loop type being requested on the Bulk Migration, as set forth in Exhibit A. Additionally, OSS charges will also apply. Loops connected to Integrated Digital Loop Carrier (IDLC) systems will be migrated pursuant to Section 2.6 below.

2.1.11.2 Should Access Point request migration for two (2) or more EATNs containing fifteen (15) or more circuits, Access Point must use the Bulk Migration process referenced in 2.1.11.1 above.

2.2 Unbundled Voice Loops (UVLs)

2.2.1 BellSouth shall make available the following UVLs:

2.2.1.1 2-wire Analog Voice Grade Loop – SL1 (Non-Designed);

2.2.1.2 2-wire Analog Voice Grade Loop – SL2 (Designed); or

2.2.1.3 4-wire Analog Voice Grade Loop (Designed).

2.2.2 UVL may be provisioned using any type of facility that will support voice grade services. This may include loaded copper, non-loaded copper, digital loop carrier systems, fiber/copper combination (hybrid loop) or a combination of any of these facilities. BellSouth, in the normal course of maintaining, repairing, and configuring its network, may also change the facilities that are used to provide any given voice grade circuit. This change may occur at any time. In these

situations, BellSouth will only ensure that the newly provided facility will support voice grade services. BellSouth will not guarantee that Access Point will be able to continue to provide any advanced services over the new facility. BellSouth will offer UVL in two different service levels - Service Level One (SL1) and Service Level Two (SL2).

2.2.3 Unbundled Voice Loop - SL1 (UVL-SL1). Loops are 2-wire loop start circuits, will be non-designed, and will not have remote access test points. OC will be offered as a chargeable option on SL1 Loops when reuse of existing facilities has been requested by Access Point, however, OC is always required on UCLs that involve the reuse of facilities that are currently providing service. Access Point may also order OC-TS when a specified conversion time is requested. OC-TS is a chargeable option for any coordinated order and is billed in addition to the OC charge. An Engineering Information (EI) document can be ordered as a chargeable option. The EI document provides Loop Make-Up information which is similar to the information normally provided in a Design Layout Record (DLR). Upon issuance of a non-coordinated order in the service order system, SL1 Loops will be activated on the due date in the same manner and time frames that BellSouth normally activates POTS-type Loops for its customers.

2.2.4 For an additional charge BellSouth will make available Loop Testing so that Access Point may request further testing on new UVL-SL1 Loops. Rates for Loop Testing are as set forth in Exhibit A.

2.2.5 Unbundled Voice Loop – SL2 (UVL-SL2). Loops may be 2-wire or 4-wire circuits, shall have remote access test points, and will be designed with a DLR provided to Access Point. SL2 circuits can be provisioned with loop start, ground start or reverse battery signaling. OC is provided as a standard feature on SL2 Loops. The OC feature will allow Access Point to coordinate the installation of the Loop with the disconnect of an existing customer's service and/or number portability service. In these cases, BellSouth will perform the order conversion with standard order coordination at its discretion during normal work hours.

2.3 Unbundled Digital Loops

2.3.1 BellSouth will offer UDLs. UDLs are service specific, will be designed, will be provisioned with test points (where appropriate), and will come standard with OC and a DLR. The various UDLs are intended to support a specific digital transmission scheme or service.

2.3.2 BellSouth shall make available the following UDLs, subject to restrictions set forth herein:

2.3.2.1 2-wire Unbundled ISDN Digital Loop;

2.3.2.2 2-wire Unbundled ADSL Compatible Loop;

2.3.2.3 2-wire Unbundled HDSL Compatible Loop;

2.3.2.4 4-wire Unbundled HDSL Compatible Loop;

2.3.2.5 4-wire Unbundled DS1 Digital Loop;

2.3.2.6 4-wire Unbundled Digital Loop/DS0 – 64 kbps, 56 kbps and below;

2.3.2.7 DS3 Loop; or

2.3.2.8 STS-1 Loop.

2.3.3 2-wire Unbundled ISDN Digital Loops. These will be provisioned according to industry standards for 2-Wire Basic Rate ISDN services and will come standard with a test point, OC, and a DLR. Access Point will be responsible for providing BellSouth with a Service Profile Identifier (SPID) associated with a particular ISDN-capable Loop and customer. With the SPID, BellSouth will be able to adequately test the circuit and ensure that it properly supports ISDN service.

2.3.4 2-wire ADSL-Compatible Loop. This is a designed Loop that is provisioned according to Revised Resistance Design (RRD) criteria and may be up to eighteen thousand (18,000) feet long and may have up to six thousand (6,000) feet of bridged tap (inclusive of Loop length). The Loop is a 2-wire circuit and will come standard with a test point, OC, and a DLR.

2.3.5 2-wire or 4-wire HDSL-Compatible Loop. This is a designed Loop that meets Carrier Serving Area (CSA) specifications, may be up to twelve thousand (12,000) feet long and may have up to twenty-five hundred (2,500) feet of bridged tap (inclusive of Loop length). It may be a 2-wire or 4-wire circuit and will come standard with a test point, OC, and a DLR.

2.3.6 4-wire Unbundled DS1 Digital Loop.

2.3.6.1 This is a designed 4-wire Loop that is provisioned according to industry standards for DS1 or Primary Rate ISDN services and will come standard with a test point, OC, and a DLR. A DS1 Loop may be provisioned over a variety of loop transmission technologies including copper, HDSL-based technology or fiber optic transport systems. It will include a 4-wire DS1 Network Interface at the customer's location. For purposes of this Agreement, DS1 Loops include 2-wire and 4-Wire copper Loops capable of providing high-bit rate digital subscriber line services, such as 2-wire and 4-wire HDSL Compatible Loops.

2.3.6.2 BellSouth shall not provide more than ten (10) unbundled DS1 Loops to Access Point at any single building in which DS1 Loops are available as unbundled Loops.

2.3.7 4-wire Unbundled Digital/DS0 Loop. These are designed 4-wire Loops that may be configured as sixty-four (64)kbps, fifty-six (56)kbps, nineteen (19)kbps, and other sub-rate speeds associated with digital data services and will come standard with a test point, OC, and a DLR.

2.3.8 DS3 Loop. DS3 Loop is a two-point digital transmission path which provides for simultaneous two-way transmission of serial, bipolar, return-to-zero isochronous digital electrical signals at a transmission rate of forty-four point seven thirty-six (44.736) megabits per second (Mbps) that is dedicated to the use of the ordering

CLEC. It may provide transport for twenty-eight (28) DS1 channels, each of which provides the digital equivalent of twenty-four (24) analog voice grade channels. The interface to unbundled dedicated DS3 transport is a metallic-based electrical interface.

2.3.9 STS-1 Loop. STS-1 Loop is a high-capacity digital transmission path with SONET VT1.5 mapping that is dedicated for the use of the ordering customer. It is a two-point digital transmission path which provides for simultaneous two-way transmission of serial bipolar return-to-zero synchronous digital electrical signals at a transmission rate of fifty-one point eighty-four (51.84) Mbps. It may provide transport for twenty-eight (28) DS1 channels, each of which provides the digital equivalent of twenty-four (24) analog voice grade channels. The interface to unbundled dedicated STS-1 transport is a metallic-based electrical interface.

2.3.10 Both DS3 Loop and STS-1 Loop require a SI in order to ascertain availability.

2.3.11 DS3 services come with a test point and a DLR. Mileage is airline miles, rounded up and a minimum of one (1) mile applies. BellSouth's TR73501

LightGate®Service Interface and Performance Specifications, Issue D, June 1995 applies to DS3 services.

2.3.12 Access Point may obtain a maximum of a single Unbundled DS3 Loop to any single building in which DS3 Loops are available as Unbundled Loops.

2.4 Unbundled Copper Loops (UCL).

2.4.1 BellSouth shall make available UCLs. The UCL is a copper twisted pair Loop that is unencumbered by any intervening equipment (e.g., filters, load coils, range extenders, digital loop carrier, or repeaters) and is not intended to support any particular telecommunications service. The UCL will be offered in two (2) types – Designed and Non-Designed.

2.4.2 Unbundled Copper Loop – Designed (UCL-D)

2.4.2.1 The UCL-D will be provisioned as a dry copper twisted pair (2-wire or 4-wire) Loop that is unencumbered by any intervening equipment (e.g., filters, load coils, range extenders, digital loop carrier, or repeaters).

2.4.2.2 A UCL-D will be eighteen thousand (18,000) feet or less in length and is provisioned according to Resistance Design parameters, may have up to six thousand (6,000) feet of bridged tap and will have up to thirteen hundred (1300) Ohms of resistance.

2.4.2.3 The UCL-D is a designed circuit, is provisioned with a test point, and comes standard with a DLR. OC is a chargeable option for a UCL-D; however, OC is always required on UCLs where a reuse of existing facilities has been requested by Access Point.

2.4.2.4 These Loops are not intended to support any particular services and may be utilized by Access Point to provide a wide-range of telecommunications services as long as those services do not adversely affect BellSouth's network. This

facility will include a Network Interface Device (NID) at the customer's location for the purpose of connecting the Loop to the customer's inside wire.

2.4.3 Unbundled Copper Loop – Non-Designed (UCL-ND)

2.4.3.1 The UCL–ND is provisioned as a dedicated 2-wire metallic transmission facility from BellSouth's Main Distribution Frame (MDF) to a customer's premises (including the NID). The UCL-ND will be a "dry copper" facility in that it will not have any intervening equipment such as load coils, repeaters, or digital access main lines (DAMLs), and may have up to six thousand (6,000) feet of bridged tap between the customer's premises and the serving wire center. The UCL-ND typically will be thirteen hundred (1300) Ohms resistance and in most cases will not exceed eighteen thousand (18,000) feet in length, although the UCL-ND will not have a specific length limitation. For Loops less than eighteen thousand (18,000) feet and with less than thirteen hundred (1300) Ohms resistance, the Loop will provide a voice grade transmission channel suitable for loop start signaling and the transport of analog voice grade signals. The UCL-ND will not be designed and will not be provisioned with either a DLR or a test point.

2.4.3.2 The UCL-ND facilities may be mechanically assigned using BellSouth's assignment systems. Therefore, the Loop Makeup (LMU) process is not required to order and provision the UCL-ND. However, Access Point can request LMU for which additional charges would apply.

2.4.3.3 For an additional charge, BellSouth also will make available Loop Testing so that Access Point may request further testing on the UCL-ND. Rates for Loop Testing are as set forth in Exhibit A.

2.4.3.4 UCL-ND Loops are not intended to support any particular service and may be utilized by Access Point to provide a wide-range of telecommunications services as long as those services do not adversely affect BellSouth's network. The UCL-ND will include a NID at the customer's location for the purpose of connecting the Loop to the customer's inside wire.

2.4.3.5 OC will be provided as a chargeable option and may be utilized when the UCL-ND provisioning is associated with the reuse of BellSouth facilities. OC-TS does not apply to this product.

2.4.3.6 Access Point may use BellSouth's Unbundled Loop Modification (ULM) offering to remove excessive bridged taps and/or load coils from any copper Loop within the BellSouth network. Therefore, some Loops that would not qualify as UCL-ND could be transformed into Loops that do qualify, using the ULM process.

2.5 Unbundled Loop Modifications (Line Conditioning)

2.5.1 Line Conditioning is defined as routine network modification that BellSouth regularly undertakes to provide xDSL services to its own customers. This may include the removal of any device, from a copper Loop or copper Subloop that may diminish the capability of the Loop or Subloop to deliver high-speed switched wireline telecommunications capability, including xDSL service. Such

devices include, load coils, excessive bridged taps, low pass filters, and range extenders. Excessive bridged taps are bridged taps that serves no network design purpose and that are beyond the limits set according to industry standards and/or the BellSouth's TR 73600 Unbundled Local Loop Technical Specification.

2.5.2 BellSouth will remove load coils only on copper Loops and Subloops that are less than eighteen thousand (18,000) feet in length.

2.5.3 For any copper loop being ordered by Access Point which has over six thousand (6,000) feet of combined bridged tap will be modified, upon request from Access Point, so that the loop will have a maximum of six thousand (6,000) feet of bridged tap. This modification will be performed at no additional charge to Access Point. Loop conditioning orders that require the removal of bridged tap that serves no network design purpose on a copper Loop that will result in a combined total of bridged tap between two thousand five hundred (2,500) and six thousand (6,000) feet will be performed at the rates set forth in Exhibit A.

2.5.4 Access Point may request removal of any unnecessary and non-excessive bridged tap (bridged tap between zero (0) and two thousand five hundred (2,500) feet which serves no network design purpose), at rates pursuant to BellSouth's SC Process as mutually agreed to by the Parties.

2.5.5 Rates for ULM are as set forth in Exhibit A.

2.5.6 BellSouth will not modify a Loop in such a way that it no longer meets the technical parameters of the original Loop type (e.g., voice grade, ADSL, etc.) being ordered.

2.5.7 If Access Point requests ULM on a reserved facility for a new Loop order, BellSouth may perform a pair change and provision a different Loop facility in lieu of the reserved facility with ULM if feasible. The Loop provisioned will meet or exceed specifications of the requested Loop facility as modified. Access Point will not be charged for ULM if a different Loop is provisioned. For Loops that require a DLR or its equivalent, BellSouth will provide LMU detail of the Loop provisioned.

2.5.8 Access Point shall request Loop make up information pursuant to this Attachment prior to submitting a service inquiry and/or a LSR for the Loop type that Access Point desires BellSouth to condition.

2.5.9 When requesting ULM for a Loop that BellSouth has previously provisioned for Access Point, Access Point will submit a SI to BellSouth. If a spare Loop facility that meets the Loop modification specifications requested by Access Point is available at the location for which the ULM was requested, Access Point will have the option to change the Loop facility to the qualifying spare facility rather than to provide ULM. In the event that BellSouth changes the Loop facility in lieu of providing ULM, Access Point will not be charged for ULM but will only be charged the service order charges for submitting an order.

2.6 <u>Loop Provisioning Involving IDLC</u>

2.6.1 Where Access Point has requested an Unbundled Loop and BellSouth uses IDLC systems to provide the local service to the customer and BellSouth has a suitable alternate facility available, BellSouth will make such alternative facilities available to Access Point. If a suitable alternative facility is not available, then to the extent it is technically feasible, BellSouth will implement one of the following alternative arrangements for Access Point (e.g., hairpinning):

1. Roll the circuit(s) from the IDLC to any spare copper that exists to the customer premises.
2. Roll the circuit(s) from the IDLC to an existing DLC that is not integrated.
3. If capacity exists, provide "side-door" porting through the switch.
4. If capacity exists, provide "Digital Access Cross-Connect System (DACS)-door" porting (if the IDLC routes through a DACS prior to integration into the switch).

2.6.2 Arrangements 3 and 4 above require the use of a designed circuit. Therefore, non-designed Loops such as the SL1 voice grade and UCL-ND may not be ordered in these cases.

2.6.3 If no alternate facility is available, and upon request from Access Point, and if agreed to by both Parties, BellSouth may utilize its SC process to determine the additional costs required to provision facilities. Access Point will then have the option of paying the one-time SC rates to place the Loop.

2.7 <u>Network Interface Device</u>

2.7.1 The NID is defined as any means of interconnection of the customer's premises wiring to BellSouth's distribution plant, such as a cross-connect device used for that purpose. The NID is a single line termination device or that portion of a multiple line termination device required to terminate a single line or circuit at the premises. The NID features two (2) independent chambers or divisions that separate the service provider's network from the customer's premises wiring. Each chamber or division contains the appropriate connection points or posts to which the service provider and the customer each make their connections. The NID provides a protective ground connection and is capable of terminating cables such as twisted pair cable.

2.7.2 BellSouth shall permit Access Point to connect Access Point's Loop facilities to the customer's premises wiring through the BellSouth NID or at any other technically feasible point.

2.7.3 <u>Access to NID</u>

2.7.3.1 Access Point may access the customer's premises wiring by any of the following means and Access Point shall not disturb the existing form of electrical protection and shall maintain the physical integrity of the NID:

2.7.3.1.1 BellSouth shall allow Access Point to connect its Loops directly to BellSouth's multi-line residential NID enclosures that have additional space and are not used

by BellSouth or any other telecommunications carriers to provide service to the premises;

2.7.3.1.2 Where an adequate length of the customer's premises wiring is present and environmental conditions permit, either Party may remove the customer premises wiring from the other Party's NID and connect such wiring to that Party's own NID;

2.7.3.1.3 Either Party may enter the subscriber access chamber or dual chamber NID enclosures for the purpose of extending a cross-connect or spliced jumper wire from the customer premises wiring through a suitable "punch-out" hole of such NID enclosures; or

2.7.3.1.4 Access Point may request BellSouth to make other rearrangements to the customer premises wiring terminations or terminal enclosure on a time and materials cost basis.

2.7.3.2 In no case shall either Party remove or disconnect the other Party's loop facilities from either Party's NIDs, enclosures, or protectors unless the applicable Commission has expressly permitted the same and the disconnecting Party provides prior notice to the other Party. In such cases, it shall be the responsibility of the Party disconnecting loop facilities to leave undisturbed the existing form of electrical protection and to maintain the physical integrity of the NID. It will be Access Point's responsibility to ensure there is no safety hazard, and Access Point will hold BellSouth harmless for any liability associated with the removal of the BellSouth Loop from the BellSouth NID. Furthermore, it shall be the responsibility of the disconnecting Party, once the other Party's loop has been disconnected from the NID, to reconnect the disconnected loop to a nationally recognized testing laboratory listed station protector, which has been grounded as per Article 800 of the National Electrical Code. If no spare station protector exists in the NID, the disconnected loop must be appropriately cleared, capped and stored.

2.7.3.3 Access Point shall not remove or disconnect ground wires from BellSouth's NIDs, enclosures, or protectors.

2.7.3.4 Access Point shall not remove or disconnect NID modules, protectors, or terminals from BellSouth's NID enclosures.

2.7.3.5 Due to the wide variety of NID enclosures and outside plant environments, BellSouth will work with Access Point to develop specific procedures to establish the most effective means of implementing this section if the procedures set forth herein do not apply to the NID in question.

2.7.4 <u>Technical Requirements</u>

2.7.4.1 The NID shall provide an accessible point of interconnection and shall maintain a connection to ground.

2.7.4.2 If an existing NID is accessed, it shall be capable of transferring electrical analog or digital signals between the customer's premises and the distribution media and/or cross-connect to Access Point's NID.

2.7.4.3 Existing BellSouth NIDs will be operational and provided in "as is" condition. Access Point may request BellSouth to do additional work to the NID on a time and material basis. When Access Point deploys its own local loops in a multiple-line termination device, Access Point shall specify the quantity of NID connections that it requires within such device.

2.8 Subloop Elements.

2.8.1 Where facilities permit, BellSouth shall offer access to its Unbundled Subloop (USL) elements as specified herein.

2.8.2 Unbundled Subloop Distribution (USLD)

2.8.2.1 The USLD facility is a dedicated transmission facility that BellSouth provides from an customer's point of demarcation to a BellSouth cross-connect device. The BellSouth cross-connect device may be located within a remote terminal (RT) or a stand-alone cross-box in the field or in the equipment room of a building. The USLD media is a copper twisted pair that can be provisioned as a 2-wire or 4-wire facility. BellSouth will make available the following subloop distribution offerings where facilities exist:

USLD – Voice Grade (USLD-VG)
Unbundled Copper Subloop (UCSL)
USLD – Intrabuilding Network Cable (USLD-INC (aka riser cable))

2.8.2.2 USLD-VG is a copper subloop facility from the cross-box in the field up to and including the point of demarcation at the customer's premises and may have load coils.

2.8.2.3 UCSL is a copper facility eighteen thousand (18,000) feet or less in length provided from the cross-box in the field up to and including the customer's point of demarcation. If available, this facility will not have any intervening equipment such as load coils between the customer and the cross-box.

2.8.2.3.1 If Access Point requests a UCSL and it is not available, Access Point may request the copper Subloop facility be modified pursuant to the ULM process to remove load coils and/or excessive bridged taps. If load coils and/or excessive bridged taps are removed, the facility will be classified as a UCSL.

2.8.2.4 USLD-INC is the distribution facility owned or controlled by BellSouth inside a building or between buildings on the same property that is not separated by a public street or road. USLD-INC includes the facility from the cross-connect device in the building equipment room up to and including the point of demarcation at the customer's premises.

2.8.2.4.1 Upon request for USLD-INC from Access Point, BellSouth will install a cross-connect panel in the building equipment room for the purpose of accessing USLD-INC pairs from a building equipment room. The cross-connect panel will function as a single point of interconnection (SPOI) for USLD-INC and will be accessible by multiple carriers as space permits. BellSouth will place cross-connect blocks in twenty five (25) pair increments for Access Point's use on this cross-connect panel. Access Point will be responsible for connecting its facilities to the twenty five (25) pair cross-connect block(s).

2.8.2.5 For access to Voice Grade USLD and UCSL, Access Point shall install a cable to the BellSouth cross-box pursuant to the terms and conditions for physical collocation for remote sites set forth in Attachment 4. This cable would be connected by a BellSouth technician within the BellSouth cross-box during the set-up process. Access Point's cable pairs can then be connected to BellSouth's USL within the BellSouth cross-box by the BellSouth technician.

2.8.2.6 Through the SI process, BellSouth will determine whether access to USLs at the location requested by Access Point is technically feasible and whether sufficient capacity exists in the cross-box. If existing capacity is sufficient to meet Access Point's request, then BellSouth will perform the site set-up as described in the CLEC Information Package, located at BellSouth's Interconnection Web site: www.interconnection.bellsouth.com/products/html/unes.html.

2.8.2.7 The site set-up must be completed before Access Point can order Subloop pairs. For the site set-up in a BellSouth cross-connect box in the field, BellSouth will perform the necessary work to splice Access Point's cable into the cross-connect box. For the site set-up inside a building equipment room, BellSouth will perform the necessary work to install the cross-connect panel and the connecting block(s) that will be used to provide access to the requested USLs.

2.8.2.8 Once the site set-up is complete, Access Point will request Subloop pairs through submission of a LSR form to the LCSC. OC is required with USL pair provisioning when Access Point requests reuse of an existing facility, and the OC charge shall be billed in addition to the USL pair rate. For expedite requests by Access Point for Subloop pairs, expedite charges will apply for intervals less than five (5) days.

2.8.2.9 USLs will be provided in accordance with BellSouth's TR 73600 Unbundled Local Loop Technical Specifications.

2.8.3 <u>Unbundled Network Terminating Wire (UNTW)</u>

2.8.3.1 UNTW is unshielded twisted copper wiring that is used to extend circuits from an intra-building network cable terminal or from a building entrance terminal to an individual customer's point of demarcation. It is the final portion of the Loop that in multi-subscriber configurations represents the point at which the network branches out to serve individual subscribers.

2.8.3.2 This element will be provided in MDUs and/or Multi-Tenants Units (MTUs) where either Party owns wiring all the way to the customer's premises. Neither

Party will provide this element in locations where the property owner provides its own wiring to the customer's premises, where a third party owns the wiring to the customer's premises.

2.8.3.3 Requirements

2.8.3.3.1 On a multi-unit premises, upon request of the other Party (Requesting Party), the Party owning the network terminating wire (Provisioning Party) will provide access to UNTW pairs on an Access Terminal that is suitable for use by multiple carriers at each Garden Terminal or Wiring Closet.

2.8.3.3.2 The Provisioning Party shall not be required to install new or additional NTW beyond existing NTW to provision the services of the Requesting Party.

2.8.3.3.3 In existing MDUs and/or MTUs in which BellSouth does not own or control wiring (INC/NTW) to the customers premises, and Access Point does own or control such wiring, Access Point will install UNTW Access Terminals for BellSouth under the same terms and conditions as BellSouth provides UNTW Access Terminals to Access Point.

2.8.3.3.4 In situations in which BellSouth activates a UNTW pair, BellSouth will compensate Access Point for each pair activated commensurate to the price specified in Access Point's Agreement.

2.8.3.3.5 Upon receipt of the UNTW SI requesting access to the Provisioning Party's UNTW pairs at a multi-unit premises, representatives of both Parties will participate in a meeting at the site of the requested access. The purpose of the site visit will include discussion of the procedures for installation and location of the Access Terminals. By request of the Requesting Party, an Access Terminal will be installed either adjacent to each of the Provisioning Party's Garden Terminal or inside each Wiring Closet. The Requesting Party will deliver and connect its central office facilities to the UNTW pairs within the Access Terminal. The Requesting Party may access any available pair on an Access Terminal. A pair is available when a pair is not being utilized to provide service or where the customer has requested a change in its local service provider to the Requesting Party. Prior to connecting the Requesting Party's service on a pair previously used by the Provisioning Party, the Requesting Party is responsible for ensuring the customer is no longer using the Provisioning Party's service or another CLEC's service before accessing UNTW pairs.

2.8.3.3.6 Access Terminal installation intervals will be established on an individual case basis.

2.8.3.3.7 The Requesting Party is responsible for obtaining the property owner's permission for the Provisioning Party to install an Access Terminal(s) on behalf of the Requesting Party. The submission of the SI by the Requesting Party will serve as certification by the Requesting Party that such permission has been obtained. If the property owner objects to Access Terminal installations that are in progress or within thirty (30) days after completion and demands removal of Access Terminals, the Requesting Party will be responsible for costs associated

with removing Access Terminals and restoring the property to its original state prior to Access Terminals being installed.

2.8.3.3.8 The Requesting Party shall indemnify and hold harmless the Provisioning Party against any claims of any kind that may arise out of the Requesting Party's failure to obtain the property owner's permission. The Requesting Party will be billed for nonrecurring and recurring charges for accessing UNTW pairs at the time the Requesting Party activates the pair(s). The Requesting Party will notify the Provisioning Party within five (5) business days of activating UNTW pairs using the LSR form.

2.8.3.3.9 If a trouble exists on a UNTW pair, the Requesting Party may use an alternate spare pair that serves that customer if a spare pair is available. In such cases, the Requesting Party will re-terminate its existing jumper from the defective pair to the spare pair. Alternatively, the Requesting Party will isolate and report troubles in the manner specified by the Provisioning Party. The Requesting Party must tag the UNTW pair that requires repair. If the Provisioning Party dispatches a technician on a reported trouble call and no UNTW trouble is found, the Provisioning Party will charge Requesting Party for time spent on the dispatch and testing the UNTW pair(s).

2.8.3.3.10 If the Requesting Party initiates the Access Terminal installation and the Requesting Party has not activated at least ten percent (10%) of the capacity of the Access Terminal installed pursuant to the Requesting Party's request for an Access Terminal within six (6) months of installation of the Access Terminal, the Provisioning Party will bill the Requesting Party a nonrecurring charge equal to the actual cost of provisioning the Access Terminal.

2.8.3.3.11 If the Provisioning Party determines that the Requesting Party is using the UNTW pairs without reporting the activation of the pairs, the Requesting Party will be billed for the use of that pair back to the date the customer began receiving service from the Requesting Party at that location. Upon request, the Requesting Party will provide copies of its billing record to substantiate such date. If the Requesting Party fails to provide such records, then the Provisioning Party will bill the Requesting Party back to the date of the Access Terminal installation.

2.9 <u>Loop Makeup</u>

2.9.1 <u>Description of Service</u>

2.9.1.1 BellSouth shall make available to Access Point LMU information with respect to Loops that are required to be unbundled under this Agreement so that Access Point can make an independent judgment about whether the Loop is capable of supporting the advanced services equipment Access Point intends to install and the services Access Point wishes to provide. LMU is a preordering transaction, distinct from Access Point ordering any other service(s). Loop Makeup Service Inquiries (LMUSI) and mechanized LMU queries for preordering LMU are likewise unique from other preordering functions with associated SIs as described in this Agreement.

2.9.1.2 BellSouth will provide Access Point LMU information consisting of the composition of the Loop material (copper/fiber); the existence, location and type of equipment on the Loop, including but not limited to digital loop carrier or other remote concentration devices, feeder/distribution interfaces, bridged taps, load coils, pair-gain devices; the Loop length; the wire gauge and electrical parameters.

2.9.1.3 BellSouth's LMU information is provided to Access Point as it exists either in BellSouth's databases or in its hard copy facility records. BellSouth does not guarantee accuracy or reliability of the LMU information provided.

2.9.1.4 BellSouth's provisioning of LMU information to the requesting CLEC for facilities is contingent upon either BellSouth or the requesting CLEC controlling the Loop(s) that serve the service location for which LMU information has been requested by the CLEC. The requesting CLEC is not authorized to receive LMU information on a facility used or controlled by another CLEC unless BellSouth receives a LOA from the voice CLEC (owner) or its authorized agent on the LMUSI submitted by the requesting CLEC.

2.9.1.5 Access Point may choose to use equipment that it deems will enable it to provide a certain type and level of service over a particular BellSouth Loop as long as that equipment does not disrupt other services on the BellSouth network. The determination shall be made solely by Access Point and BellSouth shall not be liable in any way for the performance of the advanced data services provisioned over said Loop. The specific Loop type (e.g., ADSL, HDSL, or otherwise) ordered on the LSR must match the LMU of the Loop reserved taking into consideration any requisite line conditioning. The LMU data is provided for informational purposes only and does not guarantee Access Point's ability to provide advanced data services over the ordered Loop type. Furthermore, the LMU information for Loops other than copper-only Loops (e.g., ADSL, UCL-ND, etc.) that support xDSL services, is subject to change at any time due to modifications and/or upgrades to BellSouth's network. Except as set forth in Section 2.9.1.6 below, copper-only Loops will not be subject to change due to modification and/or upgrades to BellSouth's network and will remain on copper facilities until the Loop is disconnected by Access Point or the customer, or until BellSouth retires the copper facilities via the FCC's and any applicable Commission's requirements. Access Point is fully responsible for any of its service configurations that may differ from BellSouth's technical standard for the Loop type ordered.

2.9.1.6 If BellSouth retires its copper facilities using 47 C.F.R § 51.325(a) requirements; or is required by a governmental agency or regulatory body to move or replace copper facilities as a maintenance procedure, BellSouth will notify Access Point, according to the applicable network disclosure requirements. It will be Access Point's responsibility to move any service it may provide over such facilities to alternative facilities. If Access Point fails to move the service to alternative facilities by the date in the network disclosure notice, BellSouth may terminate

the service to complete the network change.BellSouth will offer a sixty-four (64) kilobits per second (kbps) second voice grade channel over its FTTH/FTTC facilities, in an overbuild situation, as described in Paragraph 2.1.2.2.

2.9.2 Submitting LMUSI

2.9.2.1 Access Point may obtain LMU information and reserve facilities by submitting a mechanized LMU query or a manual LMUSI according to the terms and conditions as described in the LMU CLEC Information Package, incorporated herein by reference as it may be amended from time to time. The CLEC Information Package is located at the "CLEC UNE Product" on BellSouth's Interconnection Web site: www.interconnection.bellsouth.com/guides/html/unes.html. After obtaining the Loop information from the mechanized LMU process, if Access Point needs further Loop information in order to determine Loop service capability, Access Point may initiate a separate Manual SI for a separate nonrecurring charge as set forth in Exhibit A.

2.9.2.2 All LSRs issued for reserved facilities shall reference the facility reservation number as provided by BellSouth. Access Point will not be billed any additional LMU charges for the Loop ordered on such LSR. If, however, Access Point does not reserve facilities upon an initial LMUSI, Access Point's placement of an order for an advanced data service type facility will incur the appropriate billing charges to include SI and reservation per Exhibit A.

2.9.2.3 Where Access Point has reserved multiple Loop facilities on a single reservation, Access Point may not specify which facility shall be provisioned when submitting the LSR. For those occasions, BellSouth will assign to Access Point, subject to availability, a facility that meets the BellSouth technical standards of the BellSouth type Loop as ordered by Access Point.

2.9.2.4 Charges for preordering manual LMUSI or mechanized LMU are separate from any charges associated with ordering other services from BellSouth.

3 Line Splitting

3.1 Line splitting shall mean that a provider of data services (a Data LEC) and a provider of voice services (a Voice CLEC) to deliver voice and data service to customers over the same Loop. The Voice CLEC and Data LEC may be the same or different carriers.

3.2 Line Splitting – UNE-L. In the event Access Point provides its own switching or obtains switching from a third party, Access Point may engage in line splitting arrangements with another CLEC using a splitter, provided by Access Point, in a Collocation Space at the central office where the loop terminates into a distribution frame or its equivalent.

3.3 Provisioning Line Splitting and Splitter Space – UNE-L

3.3.1 The Voice CLEC provides the splitter when providing Line Splitting with UNE-L. When Access Point owns the splitter, Line Splitting requires the following: a

loop from NID at the customer's location to the serving wire center and terminating into a distribution frame or its equivalent.

3.3.2 An unloaded 2-wire copper Loop must serve the customer. The meet point for the Voice CLEC and the Data LEC is the point of termination on the MDF for the Data LEC's cable and pairs.

3.4 CLEC Provided Splitter – Line Splitting – UNE-L

3.4.1 To order High Frequency Spectrum on a particular Loop, Access Point must have a DSLAM collocated in the central office that serves the customer of such Loop.

3.4.2 Access Point may purchase, install and maintain central office POTS splitters in its collocation arrangements. Access Point may use such splitters for access to its customers and to provide digital line subscriber services to its customers using the High Frequency Spectrum. Existing Collocation rules and procedures and the terms and conditions relating to Collocation set forth in Attachment 4-Central Office shall apply.

3.4.3 Any splitters installed by Access Point in its collocation arrangement shall comply with ANSI T1.413, Annex E, or any future ANSI splitter Standards. Access Point may install any splitters that BellSouth deploys or permits to be deployed for itself or any BellSouth affiliate.

3.5 Maintenance – Line Splitting – UNE-L

3.5.1 BellSouth will be responsible for repairing voice troubles and the troubles with the physical loop between the NID at the customer's premises and the termination point.

3.5.2 Access Point shall indemnify, defend and hold harmless BellSouth from and against any claims, losses, actions, causes of action, suits, demands, damages, injury, and costs including reasonable attorney fees, which arise out of actions related to the other service provider, except to the extent caused by BellSouth's gross negligence or willful misconduct.

4 Unbundled Network Element Combinations

4.1 For purposes of this Section, references to "Currently Combined" Network Elements shall mean that the particular Network Elements requested by Access Point are in fact already combined by BellSouth in the BellSouth network. References to "Ordinarily Combined" Network Elements shall mean that the particular Network Elements requested by Access Point are not already combined by BellSouth in the location requested by Access Point but are elements that are typically combined in BellSouth's network. References to "Not Typically Combined" Network Elements shall mean that the particular Network Elements requested by Access Point are not elements that BellSouth combines for its use in its network.

4.1.1 Except as otherwise set forth in this Agreement, upon request, BellSouth shall perform the functions necessary to combine Network Elements that BellSouth is

required to provide under this Agreement in any manner, even if those elements are not ordinarily combined in BellSouth's network, provided that such Combination is technically feasible and will not undermine the ability of other carriers to obtain access to Network Elements or to interconnect with BellSouth's network.

4.1.2 To the extent Access Point requests a Combination for which BellSouth does not have methods and procedures in place to provide such Combination, rates and/or methods or procedures for such Combination will be developed pursuant to the BFR process.

4.2 Rates

4.2.1 The rates for the Currently Combined Network Elements specifically set forth in Exhibit A shall be the rates associated with such Combinations. Where a Currently Combined Combination is not specifically set forth in Exhibit A, the rate for such Currently Combined Combination shall be the sum of the recurring rates for those individual Network Elements as set forth in Exhibit A and/or Exhibit B in addition to the applicable nonrecurring switch-as-is charge set forth in Exhibit A.

4.2.2 The rates for the Ordinarily Combined Network Elements specifically set forth in Exhibit A shall be the nonrecurring and recurring charges for those Combinations. Where an Ordinarily Combined Combination is not specifically set forth in Exhibit A, the rate for such Ordinarily Combined Combination shall be the sum of the recurring rates for those individual Network Elements as set forth in Exhibit A and/or Exhibit B and nonrecurring rates for those individual Network Elements as set forth in Exhibit A.

4.2.3 The rates for Not Typically Combined Combinations shall be developed pursuant to the BFR process upon request of Access Point.

4.3 Enhanced Extended Links (EELs)

4.3.1 EELs are combinations of Loops and Dedicated Transport as defined in this Attachment, together with any facilities, equipment, or functions necessary to combine those Network Elements. BellSouth shall provide Access Point with EELs where the underlying Network Element are available and are required to be provided pursuant to this Agreement and in all instances where the requesting carrier meets the eligibility requirements, if applicable.

4.3.1.1 Access Point may order EELs to be connected to third party Collocation facilities so long as the appropriate Letter(s) of Authorization(s) are in place between the two parties.

4.3.2 High-capacity EELs are (1) combinations of Loop and Dedicated Transport, (2) Dedicated Transport commingled with a wholesale loop, or (3) a loop commingled with wholesale transport at the DS1 and/or DS3 level as described in 47 C.F.R. § 51.318(b).

4.3.3 By placing an order for a high-capacity EEL, Access Point thereby certifies that the service eligibility criteria set forth herein are met for access to a converted high-capacity EEL, a new high-capacity EEL, or part of a high-capacity commingled EEL as a UNE. BellSouth shall have the right to audit Access Point's high-capacity EELs as specified below.

4.3.4 Service Eligibility Criteria

4.3.4.1 High capacity EELs must comply with the following service eligibility requirements. Access Point must certify for each high-capacity EEL that all of the following service eligibility criteria are met:

4.3.4.1.1 Access Point has received state certification to provide local voice service in the area being served;

4.3.4.2 For each combined circuit, including each DS1 circuit, each DS1 EEL, and each DS1-equivalent circuit on a DS3 EEL:

4.3.4.2.1 1) Each circuit to be provided to each customer will be assigned a local number prior to the provision of service over that circuit;

4.3.4.2.2 2) Each DS1-equivalent circuit on a DS3 EEL must have its own local number assignment so that each DS3 must have at least twenty-eight (28) local voice numbers assigned to it;

4.3.4.2.3 3) Each circuit to be provided to each customer will have 911 or E911 capability prior to provision of service over that circuit;

4.3.4.2.4 4) Each circuit to be provided to each customer will terminate in a collocation arrangement that meets the requirements of 47 C.F.R. § 51.318(c);

4.3.4.2.5 5) Each circuit to be provided to each customer will be served by an interconnection trunk over which Access Point will transmit the calling party's number in connection with calls exchanged over the trunk;

4.3.4.2.6 6) For each twenty-four (24) DS1 EELs or other facilities having equivalent capacity, Access Point will have at least one (1) active DS1 local service interconnection trunk over which Access Point will transmit the calling party's number in connection with calls exchanged over the trunk; and

4.3.4.2.7 7) Each circuit to be provided to each customer will be served by a switch capable of switching local voice traffic.

4.3.4.3 BellSouth may, on an annual basis, audit Access Point's records in order to verify compliance with the qualifying service eligibility criteria. The audit shall be conducted by a third party independent auditor retained and paid for by BellSouth and the audit must be performed in accordance with the standards established by the American Institute for Certified Public Accountants (AICPA). Access Point shall be given 30 days notice of the scheduled audit. BellSouth shall direct its auditor to provide a copy of its report to Access Point at the same time it provides the report to BellSouth.

4.3.4.4 To the extent the independent auditor's report concludes that Access Point failed to comply with the service eligibility criteria, Access Point must true-up any difference in payments, convert all noncompliant circuits to the appropriate service, and make the correct payments on a going-forward basis. In the event the auditor's report concludes that Access Point failed to comply in all material respect with the service eligibility criteria, Access Point shall reimburse BellSouth for the cost of the independent auditor. To the extent the auditor's report concludes that Access Point did comply in all material respects with the service eligibility criteria, BellSouth will reimburse Access Point for its reasonable and demonstrable costs associated with the audit. Access Point will provide to the auditor a statement of Access Point's costs associated with complying with any requests of the auditor. The Parties shall provide reimbursement within thirty (30) days of the statement of such costs. Access Point will maintain appropriate documentation to support its certifications.

4.3.4.5 In the event Access Point converts special access services to UNEs, Access Point shall be subject to the termination liability provisions in the applicable special access tariffs, if any.

5 Dedicated Transport and Dark Fiber Transport

5.1 Dedicated Transport. Dedicated Transport is defined as BellSouth's transmission facilities between wire centers or switches owned by BellSouth, or between wire centers or switches owned by BellSouth and switches owned by Access Point, including but not limited to DS1, DS3 and OCn level services, as well as dark fiber, dedicated to Access Point. BellSouth shall not be required to provide access to OCn level Dedicated Transport under any circumstances pursuant to this Agreement. In addition, except as set forth in Section 5.2 below, BellSouth shall not be required to provide to Access Point unbundled access to interoffice transmission facilities that do not connect a pair of wire centers or switches owned by BellSouth (Entrance Facilities).

5.2 DS1 and DS3 Dedicated Transport Requirements

5.2.1 For purposes of this Section 5.2, a Business Line is as defined in 47 C.F.R. § 51.5.

5.2.2 Notwithstanding anything to the contrary in this Agreement, BellSouth shall make available Dedicated Transport except as described below:

5.2.2.1 DS1 Dedicated Transport where both wire centers at the end points of the route contain thirty-eight thousand (38,000) or more Business Lines or four (4) or more fiber-based collocators.

5.2.2.2 DS3 Dedicated Transport where both wire centers at the end points of the route contain twenty-four thousand (24,000) or more Business Lines or three (3) or more fiber-based collocators.

5.2.2.3 A list of wire centers meeting the criteria set forth in Sections 5.2.2.1 or 5.2.2.2 above as of March 10, 2005, is available on BellSouth's Interconnection Services Web site as (Initial Wire Center List).

5.2.2.4 Once a wire center exceeds either of the thresholds set forth in Section 5.2.2.1 above, no future DS1 Dedicated Transport unbundling will be required in that wire center.

5.2.2.5 Once a wire center exceeds either of the thresholds set forth in Section 5.2.2.2 above, no future DS3 Dedicated Transport will be required in that wire center.

5.2.2.6 Modifications and Updates to the Wire Center List and Subsequent Transition Periods

5.2.2.6.1 In the event BellSouth identifies additional wire centers that meet the criteria set forth in Sections 5.2.2.1 or 5.2.2.2 above, but that were not included in the Initial Wire Center List, BellSouth shall include such additional wire centers in CNL. Each such list of additional wire centers shall be considered a Subsequent Wire Center List.

5.2.2.6.2 Effective fourteen (14) days after the date of a BellSouth CNL providing a Subsequent Wire Center List, BellSouth shall not be required to provide DS1 and DS3 Dedicated Transport, as applicable, in such additional wire center(s), except pursuant to the self-certification process as set forth in Section 1.8 above.

5.2.2.6.3 For purposes of Section 5.2.2.6, BellSouth shall make available DS1 and DS3 Dedicated Transport that was in service for Access Point in a wire center on the Subsequent Wire Center List as of the fourteenth (14th) day after the date of BellSouth's CNL identifying the Subsequent Wire Center List (Subsequent Embedded Base) until one hundred and twenty (120) days after the fourteenth (14th) day from the date of BellSouth's CNL identifying the Subsequent Wire Center List (Subsequent Transition Period).

5.2.2.6.4 Subsequent disconnects or loss of customers shall be removed from the Subsequent Embedded Base.

5.2.2.6.5 The rates set forth in Exhibit B shall apply to the Subsequent Embedded Base during the Subsequent Transition Period.

5.2.2.6.6 No later than sixty (60) days from BellSouth's CNL identifying the Subsequent Wire Center List Access Point shall submit a spreadsheet(s) identifying the Subsequent Embedded Base of circuits to be disconnected or converted to other BellSouth services. The Parties agree to work cooperatively to confirm that the facilities on the spreadsheet(s) are the facilities to be included in Access Point's Subsequent Embedded Base. The Parties shall negotiate a project schedule for the Conversion of the Subsequent Embedded Base. BellSouth shall charge the non-recurring switch-as-is rate for these conversions.

5.2.2.6.6.1 If Access Point fails to submit the spreadsheet(s) specified in Section 5.2.2.6.6 above for at least 95% of its Subsequent Embedded Base within sixty (60) days after the date of BellSouth's CNL identifying the Subsequent Wire Center List, BellSouth will identify Access Point's remaining Subsequent Embedded Base, if any, and will transition such circuits to the equivalent tariffed BellSouth service(s). Those circuits identified and transitioned by BellSouth shall be

subject to the applicable disconnect charges as set forth in this Agreement and the full nonrecurring charges for installation of the equivalent tariffed BellSouth service as set forth in BellSouth's tariffs. If it is determined that Access Point failed to submit spreadsheets to convert 5% or less of its Subsequent Embedded Base, BellSouth will not convert such 5% or less of Access Point's Subsequent Embedded Base, but will alert Access Point of the 5% or less of its Subsequent Embedded Base that was not converted by Access Point and allow Access Point thirty (30) days to convert such 5% or less of its Subsequent Embedded Base. To the extent Access Point fails to convert the remaining Subsequent Embedded Base within such thirty (30) day period, BellSouth will identify and transition such circuits as described in this paragraph.

5.2.2.6.7 For Subsequent Embedded Base circuits converted pursuant to Section 5.2.2.6.6 above or transitioned pursuant to Section 5.2.2.6.6.1 above, the applicable recurring tariff charges shall apply as of the earlier of the date each circuit is converted or transitioned, as applicable, or the first day after the end of the Subsequent Transition Period.

5.2.3 BellSouth shall:

5.2.3.1 Provide Access Point exclusive use of Dedicated Transport to a particular customer or carrier;

5.2.3.2 Provide all technically feasible features, functions, and capabilities of Dedicated Transport as outlined within the technical requirements of this section;

5.2.3.3 Permit, to the extent technically feasible, Access Point to connect Dedicated Transport to equipment designated by Access Point, including but not limited to, Access Point's collocated facilities; and

5.2.3.4 Permit, to the extent technically feasible, Access Point to obtain the functionality provided by BellSouth's digital cross-connect systems.

5.3 BellSouth shall offer Dedicated Transport:

5.3.1 As capacity on a shared facility; and

5.7.1 As a circuit (i.e., DS0, DS1, DS3, STS-1) dedicated to Access Point.

5.4 Dedicated Transport may be provided over facilities such as optical fiber, copper twisted pair, and coaxial cable, and shall include transmission equipment such as line terminating equipment, amplifiers, and regenerators.

5.5 Access Point may obtain a maximum of twelve (12) unbundled DS3 Dedicated Transport circuits on each route where DS3 Dedicated Transport is available as a Network Element, and a maximum of ten (10) unbundled DS1 Dedicated Transport circuits on each Route where there is no 251©(3) unbundling obligation for DS3 Dedicated Transport but for which impairment exists for DS1 Dedicated Transport. A route is defined as a transmission path between one (1) of BellSouth's wire centers or switches and another of BellSouth's wire centers or switches. A route between two (2) points may pass through one (1) or more

intermediate wire centers or switches. Transmission paths between identical end points are the same "route", irrespective of whether they pass through the same intermediate wire centers or switches, if any.

5.6 Technical Requirements

5.6.1 BellSouth shall offer DS0 equivalent interface transmission rates for DS0 or voice grade Dedicated Transport. For DS1 or DS3 circuits, Dedicated Transport shall at a minimum meet the performance, availability, jitter, and delay requirements specified for Customer Interface to Central Office (CI to CO) connections in the applicable industry standards.

5.6.2 BellSouth shall offer the following interface transmission rates for Dedicated Transport:

5.6.2.1 DS0 Equivalent;

5.6.2.2 DS1;

5.6.2.3 DS3;

5.6.2.4 STS-1; and

5.6.2.5 SDH (Synchronous Digital Hierarchy) Standard interface rates are in accordance with International Telecommunications Union (ITU) Recommendation G.707 and Plesiochronous Digital Hierarchy (PDH) rates per ITU Recommendation G.704.

5.6.3 BellSouth shall design Dedicated Transport according to its network infrastructure. Access Point shall specify the termination points for Dedicated Transport.

5.6.4 At a minimum, Dedicated Transport shall meet each of the requirements set forth in the applicable industry technical references and BellSouth Technical References;

5.6.4.1 Telcordia TR-TSY-000191 Alarm Indication Signals Requirements and Objectives, Issue 1, May 1986.

5.6.4.2 BellSouth's TR73501 LightGate®Service Interface and Performance Specifications, Issue D, June 1995.

5.6.4.3 BellSouth's TR73525 MegaLink®Service, MegaLink Channel Service and MegaLink Plus Service Interface and Performance Specifications, Issue C, May 1996.

5.7 Unbundled Channelization (Multiplexing)

5.7.1 To the extent Access Point is purchasing DS1 or DS3 or STS-1 Dedicated Transport pursuant to this Agreement, Unbundled Channelization (UC) provides the optional multiplexing capability that will allow a DS1 (1.544 Mbps) or DS3 (44.736 Mbps) or STS-1 (51.84 Mbps) Network Elements to be multiplexed or channelized at a BellSouth central office. Channelization can be accomplished through the use of a multiplexer or a digital cross-connect system at the discretion of BellSouth. Once UC has been installed, Access Point may request channel

activation on a channelized facility and BellSouth shall connect the requested facilities via COCIs. The COCI must be compatible with the lower capacity facility and ordered with the lower capacity facility. This service is available as defined in NECA 4.

5.7.2 BellSouth shall make available the following channelization systems and interfaces:

5.7.2.1 DS1 Channelization System: channelizes a DS1 signal into a maximum of twenty-four (24) DS0s. The following COCI are available: Voice Grade, Digital Data and ISDN.

5.7.2.2 DS3 Channelization System: channelizes a DS3 signal into a maximum of twenty-eight (28) DS1s. A DS1 COCI is available with this system.

5.7.2.3 STS-1 Channelization System: channelizes a STS-1 signal into a maximum of twenty-eight (28) DS1s. A DS1 COCI is available with this system.

5.7.3 Technical Requirements. In order to assure proper operation with BellSouth provided central office multiplexing functionality, Access Point's channelization equipment must adhere strictly to form and protocol standards. Access Point must also adhere to such applicable industry standards for the multiplex channel bank, for voice frequency encoding, for various signaling schemes, and for sub rate digital access.

5.9 Dark Fiber Transport. Dark Fiber Transport is defined as Dedicated Transport that consists of unactivated optical interoffice transmission facilities without attached signal regeneration, multiplexing, aggregation or other electronics. Except as set forth in Section 5.9.1 below, BellSouth shall not be required to provide access to Dark Fiber Transport Entrance Facilities pursuant to this Agreement.

5.9.1 Dark Fiber Transport Requirements

5.9.1.1 For purposes of this Section 5.9, a Business Line is as defined in 47 C.F.R. § 51.5.

5.9.1.2 Notwithstanding anything to the contrary in this Agreement, BellSouth shall make available Dark Fiber Transport except as described below:

5.9.1.2.1 Dark Fiber Transport where both wire centers at the end points of the route contain twenty-four thousand (24,000) or more Business Lines or three (3) or more fiber-based collocators.

5.9.1.3 A list of wire centers meeting the criteria set forth in Section 5.9.1.2.1 above as of March 10, 2005, (Initial List) is available on BellSouth's Interconnection Services Web site at www.interconnection.bellsouth.com.

5.9.1.4 Once a wire center exceeds either of the thresholds set forth in Section 5.9.1.2.1 above, no future Dark Fiber Transport unbundling will be required in that wire center.

5.9.1.5 Modifications and Updates to the Wire Center List and Subsequent Transition Periods

5.9.1.5.1 In the event BellSouth identifies additional wire centers that meet the criteria set forth in Section 5.9.1.2.1 above, but that were not included in the Initial Wire Center List, BellSouth shall include such additional wire centers in a CNL. Each such list of additional wire centers shall be considered a "Subsequent Wire Center List".

5.9.1.5.2 Effective ten (10) business days after the date of a BellSouth CNL providing a Subsequent Wire Center List, BellSouth shall not be required to provide unbundled access to Dark Fiber Transport, as applicable, in such additional wire center(s), except pursuant to the self-certification process as set forth in Section 1.8 above.

5.9.1.5.3 For purposes of Section 5.9.1.5, BellSouth shall make available Dark Fiber Transport that was in service for Access Point in a wire center on the Subsequent Wire Center List as of the tenth (10th) business day after the date of BellSouth's CNL identifying the Subsequent Wire Center List (Subsequent Embedded Base) until ninety (90) days after the tenth (10th) business day from the date of BellSouth's CNL identifying the Subsequent Wire Center List (Subsequent Transition Period).

5.9.1.5.4 Subsequent disconnects or loss of customers shall be removed from the Subsequent Embedded Base.

5.9.1.5.5 The rates set forth in Exhibit B shall apply to the Subsequent Embedded Base during the Subsequent Transition Period.

5.9.1.5.6 No later than forty (40) days from BellSouth's CNL identifying the Subsequent Wire Center List Access Point shall submit a spreadsheet(s) identifying the Subsequent Embedded Base of circuits to be disconnected or converted to other BellSouth services. The Parties shall negotiate a project schedule for the Conversion of the Subsequent Embedded Base.

5.9.1.5.6.1 If Access Point fails to submit the spreadsheet(s) specified in Section 5.9.1.5.6 above for all of its Subsequent Embedded Base within forty (40) days after the date of BellSouth's CNL identifying the Subsequent Wire Center List, BellSouth will identify Access Point's remaining Subsequent Embedded Base, if any, and will transition such circuits to the equivalent tariffed BellSouth service(s). Those circuits identified and transitioned by BellSouth shall be subject to the applicable disconnect charges as set forth in this Agreement and the full nonrecurring charges for installation of the equivalent tariffed BellSouth service as set forth in BellSouth's tariffs.

5.9.1.5.6.2 For Subsequent Embedded Base circuits converted pursuant to Section 5.9.1.5.6 above or transitioned pursuant to Section 5.9.1.5.6.1 above, the applicable recurring tariff charges shall apply as of the earlier of the date each circuit is converted or transitioned, as applicable, or the first day after the end of the Subsequent Transition Period.

5.10 <u>Rearrangements</u>

5.10.1 Rearrangement of a dedicated transport or combination that includes dedicated transport that requires a CFA change: A request to move a working Access Point circuit from one CFA to another Access Point CFA, where both CFAs terminate in the same BellSouth Central Office (Change in CFA), shall not constitute the establishment of new service. The applicable rates set forth in Exhibit A shall apply.

5.10.2 Requests to reterminate one end of a facility that is not a Change in CFA constitute the establishment of new service and require disconnection of existing service and the applicable rates set forth in Exhibit A shall apply.

5.10.3 Upon request of Access Point, BellSouth shall project manage the Change in CFA or retermination of Dedicated Transport and combinations that include transport as described in Sections 5.10.1 and 5.10.2 above and Access Point may request OC-TS for such orders.

5.10.4 BellSouth shall accept a LOA between Access Point and another carrier that will allow Access Point to connect Dedicated Transport, or Combination that includes Dedicated Transport to the other carrier's collocation space or to another carrier's CFA associated with higher bandwidth transport.

5.10.5 Rearrangement of an EEL to a standalone UNE Loop that requires a CFA change: Access Point may utilize the EEL to UNE-L Retermination process, as described in BellSouth's guides available on its web site, to disconnect an EEL circuit and reterminate the Loop portion of the former EEL circuit to a collocation arrangement in the end user serving wire center as a standalone UNE Loop. When using this process, the existing Loop portion of the EEL will be re-used and the resulting standalone Loop will be subject to the rates, terms and conditions for that particular Loop as set forth in this Attachment. This process will apply only to EELs that include as a part of its combination a DS1 Loop, UVL-SL2 Loop, 4-Wire UDL Loop (64, 56 kbs) and a 2-Wire ISDN Loop.

5.10.6 BellSouth shall charge the applicable EEL to UNE-L retermination rates found in Exhibit A. Access Point shall also be charged applicable manual service order, collocation cross-connect and EEL disconnect charges are as set forth in Exhibit A.

5.10.7 The EEL to UNE-L Retermination process is not available when the Rearrangement requires a dispatch outside the serving wire center where the Loop terminates. If an outside dispatch is required, or if Access Point elects not to utilize the EEL to UNE-L Retermination process, Access Point must submit an LSR to disconnect the entire EEL circuit, and must submit a separate LSR for the requested standalone Loop. In such cases, Access Point will be charged the EEL disconnect charges and the full non-recurring rates for installation of a new Loop, as set forth in Exhibit A.

6 Automatic Location Identification/Data Management System (ALI/DMS)

6.1 <u>911 and E911 Databases</u>

6.1.1 BellSouth shall provide Access Point with nondiscriminatory access to 911 and E911 databases on an unbundled basis, in accordance with 47 C.F.R. § 51.319 (f).

6.1.2 The ALI/DMS database contains end user information (including name, address, telephone information, and sometimes special information from the local service provider or end user) used to determine to which PSAP to route the call. The ALI/DMS database is used to provide enhanced routing flexibility for E911. Access Point will be required to provide the BellSouth 911 database vendor daily service order updates to E911 database in accordance with Section 6.2.1 below.

6.2 Technical Requirements

6.2.1 BellSouth's 911 database vendor shall provide Access Point the capability of providing updates to the ALI/DMS database through a specified electronic interface. Access Point shall contact BellSouth's 911 database vendor directly to request interface. Access Point shall provide updates directly to BellSouth's 911 database vendor on a daily basis. Updates shall be the responsibility of Access Point and BellSouth shall not be liable for the transactions between Access Point and BellSouth's 911 database vendor.

6.2.2 It is Access Point's responsibility to retrieve and confirm statistical data and to correct errors obtained from BellSouth's 911 database vendor on a daily basis. All errors will be assigned a unique error code and the description of the error and the corrective action is described in the CLEC Users Guide for Facility Based Providers that is found on the BellSouth Interconnection Web site.

6.2.3 Access Point shall conform to the BellSouth standards as described in the CLEC Users Guide to E911 for Facilities Based Providers that is located on the BellSouth Interconnection Web site at www.interconnection.bellsouth.com/guides.

6.2.4 Stranded Unlocks are defined as end user records in BellSouth's ALI/DMS database that have not been migrated for over ninety (90) days to Access Point, as a new provider of local service to the end user. Stranded Unlocks are those end user records that have been "unlocked" by the previous local exchange carrier that provided service to the end user and are open for Access Point to assume responsibility for such records.

6.2.5 Based upon end user record ownership information available in the NPAC database, BellSouth shall provide a Stranded Unlock annual report to Access Point that reflects all Stranded Unlocks that remain in the ALI/DMS database for over ninety (90) days. Access Point shall review the Stranded Unlock report, identify its end user records and request to either delete such records or migrate the records to Access Point within two (2) months following the date of the Stranded Unlock report provided by BellSouth. Access Point shall reimburse BellSouth for any charges BellSouth's database vendor imposes on BellSouth for the deletion of Access Point's records.

6.3 911 PBX Locate Service®. 911 PBX Locate Service is comprised of a database capability and a separate transport component.

6.3.1 Description of Product. The transport component provides a dedicated trunk path from a Private Branch Exchange (PBX) switch to the appropriate BellSouth 911 tandem.

6.3.1.1 The database capability allows Access Point to offer an E911 service to its PBX end users that identifies to the PSAP the physical location of the Access Point PBX 911 end user station telephone number for the 911 call that is placed by the end user.

6.3.2 Access Point may order either the database capability or the transport component as desired or Access Point may order both components of the service.

6.3.3 911 PBX Locate Database Capability. Access Point's end user or Access Point's end user's database management agent (DMA) must provide the end user PBX station telephone numbers and corresponding address and location data to BellSouth's 911 database vendor. The data will be loaded and maintained in BellSouth's ALI database.

6.3.4 Ordering, provisioning, testing and maintenance shall be provided by Access Point pursuant to the 911 PBX Locate Marketing Service Description (MSD) that is located on the BellSouth Interconnection Web site.

6.3.5 Access Point's end user, or Access Point's end user DMA must provide ongoing updates to BellSouth's 911 database vendor within a commercially reasonable timeframe of all PBX station telephone number adds, moves and deletions. It will be the responsibility of Access Point to ensure that the end user or DMA maintain the data pertaining to each end user's extension managed by the 911 PBX Locate Service product. Access Point should not submit telephone number updates for specific PBX station telephone numbers that are submitted by Access Point's end user, or Access Point's end user DMA under the terms of 911 PBX Locate product.

6.3.5.1 Access Point must provision all PBX station numbers in the same LATA as the E911 tandem.

6.3.6 Access Point agrees to release, indemnify, defend and hold harmless BellSouth from any and all loss, claims, demands, suits, or other action, or any liability whatsoever, whether suffered, made, instituted or asserted by Access Point's end user or by any other party or person, for any personal injury to or death of any person or persons, or for any loss, damage or destruction of any property, whether owned by Access Point or others, or for any infringement or invasion of the right of privacy of any person or persons, caused or claimed to have been caused, directly or indirectly, by the installation, operation, failure to operate, maintenance, removal, presence, condition, location or use of PBX Locate Service features or by any services which are or may be furnished by BellSouth in connection therewith, including but not limited to the identification of the telephone number, address or name associated with the telephone used by the party or parties accessing 911 services using 911 PBX Locate Service hereunder, except to the extent caused by BellSouth's gross negligence or wilful misconduct.

Access Point is responsible for assuring that its authorized end users comply with the provisions of these terms and that unauthorized persons do not gain access to or use the 911 PBX Locate Service through user names, passwords, or other identifiers assigned to Access Point's end user or DMA pursuant to these terms. Specifically, Access Point's end user or DMA must keep and protect from use by any unauthorized individual identifiers, passwords, and any other security token(s) and devices that are provided for access to this product.

6.3.7 Access Point may only use BellSouth PBX Locate Service solely for the purpose of validating and correcting 911 related data for Access Point's end users' telephone numbers for which it has direct management authority.

6.3.8 911 PBX Locate Transport Component. The 911 PBX Locate Service transport component requires Access Point to order a CAMA type dedicated trunk from Access Point's end user premise to the appropriate BellSouth 911 tandem pursuant to the following provisions.

6.3.8.1 Except as otherwise set forth below, a minimum of two (2) end user specific, dedicated 911 trunks are required between the Access Point's end user premise and the BellSouth 911 tandem as described in BellSouth's TR 73576 and in accordance with the 911 PBX Locate Marketing Service Description located on the BellSouth Interconnection Web site. Access Point is responsible for connectivity between the end user's PBX and Access Point's switch or POP location. Access Point will then order 911 trunks from their switch or POP location to the BellSouth 911 tandem. The dedicated trunks shall be, at a minimum, DS0 level trunks configured as part of a digital interface (delivered over a Access Point purchased DS1 facility that hands off at a DS1 or higher level digital or optical interface). Access Point is responsible for ensuring that the PBX switch is capable of sending the calling station's Direct Inward Dial (DID) telephone number to the BellSouth 911 tandem in a specified Multi-frequency (MF) Address Signaling Protocol. If the PBX switch supports Primary Rate ISDN (PRI) and the calling stations are DID numbers, then the 911call can be transmitted using PRI, and there will be no requirement for the PBX Locate Transport component.

6.3.9 Ordering and Provisioning. Access Point will submit an Access Service Request (ASR) to BellSouth to order a minimum of two (2) end user specific 911 trunks from its switch or POP location to the BellSouth 911 tandem.

6.3.9.1 Testing and maintenance shall be provided by Access Point pursuant to the 911 PBX Locate Marketing Service description that is located on the BellSouth Interconnection Web site.

6.3.10 Rates. Rates for the 911 PBX Locate Service database component are set forth in Exhibit A. Trunks and facilities for 911 PBX Locate transport component may be ordered by Access Point pursuant to the terms and conditions set forth in Attachment 3.

7 White Pages Listings

7.1 BellSouth shall provide Access Point and its customers access to white pages directory listings under the following terms:

7.1.1 Listings. Access Point shall provide all new, changed and deleted listings on a timely basis and BellSouth or its agent will include Access Point residential and business customer listings in the appropriate White Pages (residential and business) or alphabetical directories in the geographic areas covered by this Agreement. Directory listings will make no distinction between Access Point and BellSouth customers. Access Point shall provide listing information in accordance with the procedures set forth in The BellSouth Business Rules for Local Ordering found at BellSouth's Interconnection Services Web site.

7.1.2 Unlisted/Non-Published Customers. Access Point will be required to provide to BellSouth the names, addresses and telephone numbers of all Access Point customers who wish to be omitted from directories. Unlisted/Non-Published listings will be subject to the rates as set forth in BellSouth's GSST and shall not be subject to wholesale discount.

7.1.3 Inclusion of Access Point Customers in Directory Assistance Database. BellSouth will include and maintain Access Point customer listings in BellSouth's DA databases. Access Point shall provide such Directory Assistance listings to BellSouth at no charge.

7.1.4 Listing Information Confidentiality. BellSouth will afford Access Point's directory listing information the same level of confidentiality that BellSouth affords its own directory listing information.

7.1.5 Additional and Designer Listings. Additional and designer listings will be offered by BellSouth at tariffed rates as set forth in BellSouth's GSST and shall not be subject to the wholesale discount.

7.1.6 Rates. So long as Access Point provides listing information to BellSouth as set forth in Section 7.1.2 above, BellSouth shall provide to Access Point one (1) basic White Pages directory listing per Access Point customer at no charge other than applicable service order charges as set forth in BellSouth's tariffs. Except in the case of a LSR submitted solely to port a number from BellSouth, if such listing is requested on the initial LSR associated with the request for services, a single manual service order charge or electronic service order charge, as appropriate, as described in Attachment 6, will apply to both the request for service and the request for the directory listing. Where a subsequent LSR is placed solely to request a directory listing, or is placed to port a number and request a directory listing, separate service order charges as set forth in BellSouth's tariffs shall apply, as well as the manual service order charge or the electronic service order charge, as appropriate, as described in Attachment 6.

7.2 Directories. BellSouth or its agent shall make available White Pages directories to Access Point customer at no charge or as specified in a separate agreement between Access Point and BellSouth's agent.

7.3 Procedures for submitting Access Point SLI are found in The BellSouth Business Rules for Local Ordering found at BellSouth's Interconnection Services Web site.

7.3.1 Access Point authorizes BellSouth to release all Access Point SLI provided to BellSouth by Access Point to qualifying third parties pursuant to either a license agreement or BellSouth's Directory Publishers Database Service (DPDS), BellSouth's GSST. Such Access Point SLI shall be intermingled with BellSouth's own customer listings and listings of any other CLEC that has authorized a similar release of SLI.

7.3.2 No compensation shall be paid to Access Point for BellSouth's receipt of Access Point SLI, or for the subsequent release to third parties of such SLI. In addition, to the extent BellSouth incurs costs to modify its systems to enable the release of Access Point's SLI, or costs on an ongoing basis to administer the release of Access Point SLI, Access Point shall pay to BellSouth its proportionate share of the reasonable costs associated therewith. At any time that costs may be incurred to administer the release of Access Point's SLI, Access Point will be notified. If Access Point does not wish to pay its proportionate share of these reasonable costs, Access Point may instruct BellSouth that it does not wish to release its SLI to independent publishers, and Access Point shall amend this Agreement accordingly. Access Point will be liable for all costs incurred until the effective date of the agreement.

7.3.3 Neither BellSouth nor any agent shall be liable for the content or accuracy of any SLI provided by Access Point under this Agreement. Access Point shall indemnify, except to the extent caused by BellSouth's gross negligence or willful misconduct, hold harmless and defend BellSouth and its agents from and against any damages, losses, liabilities, demands, claims, suits, judgments, costs and expenses (including but not limited to reasonable attorneys' fees and expenses) arising from BellSouth's tariff obligations or otherwise and resulting from or arising out of any third party's claim of inaccurate Access Point listings or use of the SLI provided pursuant to this Agreement. BellSouth may forward to Access Point any complaints received by BellSouth relating to the accuracy or quality of Access Point listings.

7.3.4 Listings and subsequent updates will be released consistent with BellSouth system changes and/or update scheduling requirements.

1 Requirements for DS1 and DS3 Loops

1.1 BellSouth shall not provide more than ten (10) unbundled DS1 Loops to Access Point at any single building in which DS1 Loops are available as unbundled loops.

1.2 Access Point may obtain a maximum of a single Unbundled DS3 loop to any single building in which DS3 Loops are available as Unbundled Loops.

1.3 Notwithstanding anything to the contrary in this Agreement, and except as set forth in Section 10, BellSouth shall make available DS1 and DS3 Loops except as described below:

1.3.1 DS1 Loops to any Building served by a wire center containing 60,000 or more Business Lines and four (4) or more fiber-based collocators (DS1 Threshold).

1.3.2 DS3 Loops to any Building served by a wire center containing 38,000 or more Business Lines and four (4) or more fiber-based collocators (DS3 Threshold).

1.4 The initial list of wire centers (Initial Wire Center List) meeting the criteria set forth in Sections 1.3.1 and 1.3.2 above, is set forth in Section 4.1.3 hereto. As of the effective date of this Agreement, no self-certification in any wire center set forth in the Initial Wire Center List is permitted.

2 Dedicated Transport and Dark Fiber Transport

2.1 Dedicated Transport. Dedicated Transport is defined as BellSouth's transmission facilities between wire centers or switches owned by BellSouth, or between wire centers or switches owned by BellSouth and switches owned by Access Point, including but not limited to DS1, DS3 and OCn level services, as well as dark fiber, dedicated to Access Point. BellSouth shall not be required to provide access to OCn level Dedicated Transport under any circumstances pursuant to this Agreement.

2.1.1 Notwithstanding anything to the contrary in this Agreement, BellSouth shall make available Dedicated Transport as described in this Section 2.1 except as described below:

2.1.1.1 DS1 Dedicated Transport where both wire centers at the end points of the route contain 38,000 or more Business Lines or four (4) or more fiber-based collocators. (Tier 1 Wire Center)

2.1.1.2 DS3 Dedicated Transport where both wire centers at the end points of the route contain 24,000 or more Business Lines or three (3) or more fiber-based collocators (Tier 2 Wire Center).

2.1.1.3 Access Point may obtain a maximum of twelve (12) unbundled DS3 Dedicated Transport circuits on each route where DS3 Dedicated Transport is available as a Network Element, and a maximum of ten (10) unbundled DS1 Dedicated

Transport circuits on each Route where there is no 251(c)(3) unbundling obligation for DS3 Dedicated Transport but for which impairment exists for DS1 Dedicated Transport.

2.1.2 The initial list of wire centers (Initial Wire Center List) meeting the criteria set forth in Sections 2.1.1.1 and 2.1.1.2 above, is set forth in Section 4.1.3 hereto. As of the effective date of this Agreement, no self-certification in any wire center set forth in the Initial Wire Center List is permitted.

2.1.3 A wire center listed on the Initial Wire Center List exceeds either of the thresholds set forth in Sections 2.1.1.1 or 2.1.1.2 above, no further DS1 Dedicated Transport Unbundling will be required from that wire center to other Tier 1 wire centers.

2.1.4 A wire center listed on the Initial Wire Center List exceeds either of the thresholds set forth in Sections 2.1.1.1 or 2.1.1.2above, no further DS3 Dedicated Transport unbundling will be required from that wire center to Tier 1 or Tier 2 wire centers.

2.2 Dark Fiber Transport. Dark Fiber Transport is defined as Dedicated Transport that consists of unactivated optical interoffice transmission facilities without attached signal regeneration, multiplexing, aggregation or other electronics.

2.2.1 Notwithstanding anything to the contrary in this Agreement, BellSouth shall make available Dark Fiber Transport as described in this Section 2.2 except as described below:

2.2.1.1 Dark Fiber Transport where both wire centers at the end points of the route contain twenty-four thousand (24,000) or more Business Lines or three (3) or more fiber-based collocators. (Tier 2 Wire Center)

2.2.2 The initial list of wire centers (Initial Wire Center List) meeting the criteria set forth in Section 2.2.1.1 above, is set forth in Section 4.1.3 hereto. As of the effective date of this Agreement, no self-certification in any wire center set forth in the Initial Wire Center List is permitted.

2.2.3 Wire Centers listed on the Initial List exceed the threshold set forth in Section 2.2.1.1, BellSouth will not be required to provide Access Point access to Dark Fiber Transport from those wire centers.

3 Loops/Transport

3.1 Language to implement BellSouth's obligation to provide § 251 unbundled access to high capacity loops and dedicated transport is included under Issue 1.

3.2 (i) Business Line

3.2.1 For purposes of this Amendment, a "Business Line" is, as defined in 47 C.F.R. § 51.5, a BellSouth-owned switched access line used to serve a business customer, whether by BellSouth itself or by a CLEC that leases the line from BellSouth. The number of business lines in a wire center shall equal the sum of all BellSouth

business switched access lines, plus the sum of all UNE loops connected to that wire center, including UNE loops provisioned in combination with other unbundled elements. Among these requirements, business line tallies (1) shall include only those access lines connecting end user customers with BellSouth end-offices for switched services, (2) shall not include non-switched special access lines, (3) shall account for ISDN and other digital access lines by counting each sixty-four (64) kbps-equivalent as one (1) line. For example, a DS1 line corresponds to twenty-four (24) sixty-four (64) kbps-equivalents, and therefore to twenty-four (24) "business lines."

3.3 (ii) Fiber-Based Collocation

3.3.1 For purposes of this Amendment a "Fiber-Based Collocator" is, as defined in 47 C.F.R. § 51.5, any carrier, unaffiliated with BellSouth, that maintains a collocation arrangement in a BellSouth wire center, with active electrical power supply, and operates a fiber-optic cable or comparable transmission facility that (1) terminates at a collocation arrangement within the wire center; (2) leaves the BellSouth wire center premises; and (3) is owned by a party other than BellSouth or any affiliate of BellSouth, except as set forth in this paragraph. Dark fiber obtained from an incumbent LEC on an indefeasible right of use basis shall be treated as non-incumbent LEC fiber-optic cable. Two (2) or more affiliated fiber-based collocators in a single wire center shall collectively be counted as a single fiber-based collocator. For purposes of this paragraph, the term affiliate is defined by 47 U.S.C. § 153(1) and any relevant interpretation in this Title.

3.4 (iii) Building

3.4.1 For purposes of this Amendment, a "Building" is a permanent physical structure including, but not limited to, a structure in which people reside, or conduct business or work on a daily basis and through which there is one centralized point of entry in the structure through which all telecommunications services must transit. As an example only, a high rise office building with a general telecommunications equipment room through which all telecommunications services to that building's tenants must pass would be a single "building" for purposes of this Amendment. Two (2) or more physical areas served by individual points of entry through which telecommunications services must transit will be considered separate buildings. For instance, a strip mall with individual businesses obtaining telecommunication services from different access points on the building(s) will be considered individual buildings, even though they might share common walls.

3.5 (iv) Route

3.5.1 The definition of a route is as defined in Section 3.1 of this Exhibit A.

4 Procedures For Additional Designations Of "Non-Impaired" Wire Centers

4.1 If BellSouth seeks to designate additional wire centers as "non-impaired" for

purposes of the FCC's Triennial Review Remand Order (TRRO), BellSouth will post a Carrier Notification Letter (CNL) designating any new (additional) "non-impaired" wire centers ("subsequent wire centers"). The list of additional "non-impaired" wire centers as designated by BellSouth will reflect the number of Business Lines, as of December 31 of the previous year, and will also reflect the number of fiber-based collocators in each subsequent wire center on the list at the time of BellSouth's designation.

4.1.1 Designation by BellSouth of additional "non-impaired" wire centers will be based on the following criteria:

a. The CLLI of the wire center.
b. The number of switched business lines served by BellSouth in that wire center based upon data as reported in ARMIS 43-08 for the previous year.
c. The sum of all UNE Loops connected to each wire center, including UNE Loops provisioned in combination with other elements.
d. A completed worksheet that shows, in detail, any conversion of access lines to voice grade equivalents.
e. The names of any carriers relied upon as fiber-based collocators.

4.1.2 BellSouth and Access Point agree to resolve disputes concerning BellSouth's additional wire center designations in dispute resolution proceedings before the Commission.

4.1.3 The initial wire center list is shown below.

WIRE CENTER	BUSINESS LINES	FIBER-BASED COLLOCATION	TRANSPORT TIER	LOOP UNBUNDLING
MIAMFLPL	86,923	>4	1	No DS1/3
MIAMFLGR	68,580	>4	1	No DS1/3
ORLDFLMA	57,966	>4	1	No DS3
FTLDFLMR	55,881	>4	1	No DS3
GSVLFLMA	55,681	4	1	No DS3
ORLDFLPC	45,792	>4	1	No DS3
MIAMFLHL	43,021	>4	1	No DS3
JCVLFLCL	42,452	>4	1	No DS3
MIAMFLAE	41,912	>4	1	No DS3
BCRTFLMA	40,746	>4	1	No DS3
PRRNFLMA	37,969	3	2	
HLWDFLPE	37,415	4	1	
WPBHFLHH	36,053	3	2	
HLWDFLWH	34,022	--	2	
PMBHFLMA	33,993	4	1	
WPBHFLAN	33,521	4	1	

WIRE CENTER	BUSINESS LINES	FIBER-BASED COLLOCATION	TRANSPORT TIER	LOOP UNBUNDLING
ORLDFLPH	33,148	4	1	
MLBRFLMA	32,547	4	1	
DYBHFLMA	32,282	>4	1	
FTLDFLCY	31,487	4	1	
ORLDFLAP	31,234	3	2	
PNSCFLFP	30,863	--	2	
FTLDFLPL	29,469	>4	1	
FTLDFLJA	29,209	>4	1	
PNSCFLBL	28,685	4	1	
BCRTFLBT	26,601	--	2	
WPBHFLGR	26,527	3	2	
ORLDFLSA	26,126	>4	1	
PMBHFLFE	25,909	4	1	
STRTFLMA	25,577	--	2	
WPBHFLGA	24,885	--	2	
MIAMFLRR	24,740	3	2	
DRBHFLMA	24,695	1	2	
MIAMFLBR	24,482	--	2	
MIAMFLPB	24,380	4	1	
JCVLFLSJ	24,088	3	2	
MIAMFLSO	23,802	3	2	
MIAMFLWM	23,310	4	1	
FTLDFLOA	23,008	>4	1	
MIAMFLCA	22,645	3	2	
ORLDFLCL	20,828	>4	1	
MNDRFLLO	20,180	3	2	
NDADFLGG	18,239	>4	1	
COCOFLMA	18,097	4	1	
JCVLFLSM	17,820	>4	1	
WPBHFLLE	13,622	3	2	

5 2-wire or 4-wire HDSL-Compatible Loop. This is a designed Loop that meets Carrier Serving Area (CSA) specifications, may be up to twelve thousand (12,000) feet long and may have up to twenty-five hundred (2,500) feet of bridged tap (inclusive of Loop length). It may be a 2-wire or 4-wire circuit and will come standard with a test point, OC, and a DLR.

6 4-wire Unbundled DS1 Digital Loop. This is a designed 4-wire Loop that is provisioned according to industry standards for DS1 or Primary Rate ISDN services and will come standard with a test point, OC, and a DLR. A DS1 Loop

may be provisioned over a variety of loop transmission technologies including copper, HDSL-based technology or fiber optic transport systems. It will include a 4-wire DS1 Network Interface at the customer's location. For purposes of this Agreement, including the transition of DS1 and DS3 Loops described in Section 1 above, DS1 Loops include provisioned HDSL loops and the associated electronics whether configured as HDSL-2-wire or HDSL-4-wire loops.

7 Except to the extent expressly provided otherwise in this Attachment, Access Point may not maintain unbundled network elements or combinations of unbundled network elements, that are no longer offered pursuant to this Agreement (collectively "Arrangements"). In the event BellSouth determines that Access Point has in place any Arrangements after the Effective Date of this Agreement, BellSouth will provide Access Point with thirty (30) days written notice to disconnect or convert such Arrangements. Those circuits identified by Access Point within such thirty (30) day period shall be subject to Commission-approved switch-as-is rates with no UNE disconnect charges. If Access Point fails to submit orders to disconnect or convert such Arrangements within such thirty (30)-day period, BellSouth will transition such circuits to the equivalent tariffed BellSouth service(s). Those circuits identified and transitioned by BellSouth shall be subject to all applicable UNE disconnect charges as set forth in this Agreement and the full nonrecurring charges for installation of the equivalent tariffed BellSouth service as set forth in BellSouth's tariffs. The applicable recurring tariff charges shall apply to each circuit beginning the day following the thirty (30)-day notice period.

8 Self-Certification. Prior to submitting an order pursuant to this Agreement for high capacity (DS1 or above) Dedicated Transport or high capacity Loops, Access Point shall undertake a reasonably diligent inquiry to determine whether Access Point is entitled to unbundled access to such Network Elements in accordance with the terms of this Agreement. By submitting any such order, Access Point self-certifies that to the best of Access Point's knowledge, the high capacity Dedicated Transport or high capacity Loop requested is available as a Network Element pursuant to this Agreement. Upon receiving such order, BellSouth shall process the request in reliance upon Access Point's self-certification. To the extent BellSouth believes that such request does not comply with the terms of this Agreement, BellSouth shall seek dispute resolution in accordance with the General Terms and Conditions of this Agreement. In the event such dispute is resolved in BellSouth's favor, BellSouth shall bill Access Point the difference between the rates for such circuits pursuant to this Agreement and the applicable nonrecurring and recurring charges for the equivalent tariffed service from the date of installation to the date the circuit is transitioned to the equivalent tariffed service. Within thirty (30) days following a decision finding in BellSouth's favor, Access Point shall submit a spreadsheet identifying those non-compliant circuits to be transitioned to tariffed services or disconnected.

9 In the event that (1) BellSouth designates a wire center as non-impaired, (2) Access Point converts existing UNEs to other services or orders new services as services other than UNEs, (3) Access Point otherwise would have been entitled to UNEs in such wire center at the time alternative services provisioned, and (4) BellSouth acknowledges or a state or federal agency regulatory body with authority determines that, at the time BellSouth designated such wire center as non-impaired, such wire center did not meet the FCC's non-impairment criteria, then upon request of Access Point, BellSouth shall transition to UNEs any alternative services in such wire center that were established after such wire center was designated as non-impaired. In such instances, BellSouth shall refund Access Point the difference between the rate paid by Access Point for such services and the applicable UNE rate, including but not limited to any charges associated with the unnecessary conversion from UNE to other wholesale services.

10 Modifications and Updates to the Wire Center List and Subsequent Transition Periods

10.1 <u>DS1 or DS3 loops, or Dedicated Transport in Wire Centers that Meet the TRRO Non-Impaired Criteria in the Future</u>

10.2 In the event BellSouth identifies additional wire centers that meet the criteria set forth in Sections 1.3.1 (DS1 loops), 1.3.2 (DS3 loops), 2.1.1.1 (DS1 transport) and 2.1.1.2 (DS3 transport) but that were not included in the Initial Wire Center List, BellSouth shall include such additional wire centers in a carrier notification letter (CNL). Each such list of additional wire centers shall be considered a "Subsequent Wire Center List."

10.3 Effective thirty (30) days after the date of a BellSouth CNL providing a Subsequent Wire Center List, BellSouth shall not be required to unbundle new DS1 or DS3 Loops, or transport, as applicable, in such additional wire center(s), except pursuant to the self-certification process.

10.4 BellSouth shall make available de-listed DS1 and DS3 Loops and transport that were in service for Access Point in a de-listed wire center on the Subsequent Wire Center List as of the thirtieth (30th) day after the date of BellSouth's CNL identifying the Subsequent Wire Center List (Subsequent Embedded Base) until one hundred and eighty (180) days after the thirtieth (30th) day from the date of BellSouth's CNL identifying the Subsequent Wire Center List (Subsequent Transition Period).

10.5 Subsequent disconnects or loss of customers shall be removed from the Subsequent Embedded Base.

10.6 The rates that shall apply to the Subsequent Embedded Base throughout the entire Subsequent Transition Period. The rates shall equal the rate paid for that element at the time of the CNL posting, plus fifteen percent (15%).

10.7 No later than one hundred and eighty (180) days from BellSouth's CNL identifying the Subsequent Wire Center List, Access Point shall submit a spreadsheet(s) identifying the Subsequent Embedded Base of circuits to be disconnected or converted to other BellSouth services. For Conversions as defined in Section 15, such spreadsheets shall take the place of an LSR or ASR. The Parties shall negotiate a project schedule for the Conversion of the Subsequent Embedded Base of circuits. If a Access Point chooses to convert the de-listed DS1 and DS3 Loops and Transport to special access circuits, BellSouth will include such de-listed DS1 and DS3 Loops and Transport once converted within Access Point's total special access circuits and apply any discounts to which Access Point is entitled. The Parties shall negotiate a project schedule for the Conversion of the Subsequent Embedded Base.

10.7.1 If Access Point submits the spreadsheet(s) for its Subsequent Embedded Base by one hundred and eighty (180) days from BellSouth's CNL identifying the Subsequent Wire Center List, those identified circuits shall be subject to the Commission-approved switch-as-is conversion nonrecurring charges.

10.7.2 If Access Point fails to submit the spreadsheet(s) for all of its Subsequent Embedded Base by one hundred and eighty (180) days after the date of BellSouth's CNL identifying the Subsequent Wire Center List, BellSouth will identify Access Point's remaining Subsequent Embedded Base, if any, and will transition such circuits to the equivalent tariffed BellSouth service(s). Those circuits identified and transitioned by BellSouth shall be subject to the applicable disconnect charges as set forth in this Agreement and the full nonrecurring charges for installation of the equivalent tariffed BellSouth service as set forth in BellSouth's tariffs.

10.7.3 For Subsequent Embedded Base circuits converted or transitioned, the applicable recurring tariff charges shall apply on the first day after the end of the Subsequent Transition Period. The transition of the Subsequent Embedded Base circuits should be performed in a manner that avoids, or otherwise minimizes to the extent possible, disruption or degradation to Access Point's customers' service.

10.8 <u>Dark Fiber Transport in Wire Centers that Meet the TRRO Non-Impaired Criteria in the Future</u>

10.8.1 In the event BellSouth identifies additional wire centers that meet the criteria set forth in Section 2.2.1.1 above, but that were not included in the Initial Wire Center List, BellSouth shall include such additional wire centers in a CNL. Each such list of additional wire centers shall be considered a "Subsequent Wire Center List."

10.8.2 Effective thirty (30) days after the date of a BellSouth CNL providing a Subsequent Wire Center List, BellSouth shall not be required to unbundle new Dark Fiber Transport, as applicable, in such additional wire center(s), except pursuant to the self-certification process as set forth in Section 8 above.

10.8.3 For purposes of Section 10.8, BellSouth shall make available dark fiber transport that was in service for Access Point in a wire center on the Subsequent Wire Center List as of the thirtieth (30th) day after the date of BellSouth's CNL identifying the Subsequent Wire Center List (Subsequent Embedded Base) until two hundred and seventy (270) days after the thirtieth (30th) day from the date of BellSouth's CNL identifying the Subsequent Wire Center List (Subsequent Transition Period).

10.8.4 Subsequent disconnects or loss of customers shall be removed from the Subsequent Embedded Base.

10.8.5 The rates that shall apply to the Subsequent Embedded Base throughout the entire Subsequent Transition Period. The rates shall equal the rate paid for that element at the time of the CNL posting, plus fifteen percent (15%).

10.8.6 No later than two hundred and seventy (270) days from BellSouth's CNL identifying the Subsequent Wire Center List Access Point shall submit a spreadsheet(s) identifying the Subsequent Embedded Base of circuits to be disconnected or converted to other BellSouth services. For Conversions as defined in Section 14, such spreadsheets shall take the place of an LSR or ASR. The Parties shall negotiate a project schedule for the Conversion of the Subsequent Embedded Base of circuits. If a Access Point chooses to convert the Dark Fiber Transport to special access circuits, BellSouth will include such Dark Fiber Transport once converted within Access Point's total special access circuits and apply any discounts to which Access Point is entitled. The Parties shall negotiate a project schedule for the Conversion of the Subsequent Embedded Base.

10.8.6.1 If Access Point submits the spreadsheet(s) for its Subsequent Embedded Base within two hundred and seventy (270) days from BellSouth's CNL identifying the Subsequent Wire Center List, those identified circuits shall be subject to the Commission-approved switch-as-is conversion nonrecurring charges are applicable

10.8.6.2 If Access Point fails to submit the spreadsheet(s) for all of its Subsequent Embedded Base within two hundred and seventy (270) days after the date of BellSouth's CNL identifying the Subsequent Wire Center List, BellSouth will identify Access Point's remaining Subsequent Embedded Base, if any, and will transition such circuits to the equivalent tariffed BellSouth service(s). Those circuits identified and transitioned by BellSouth shall be subject to the applicable disconnect charges as set forth in this Agreement and the full nonrecurring charges for installation of the equivalent tariffed BellSouth service as set forth in BellSouth's tariffs.

10.8.7 For Subsequent Embedded Base circuits converted or transitioned, the applicable recurring tariff charges shall apply on the first day after the end of the Subsequent Transition Period. The transition of the Subsequent Embedded Base circuits

should be performed in a manner that avoids, or otherwise, minimizes to the extent possible, disruption or degradation to Access Point's customers' service.

11 Access Point may purchase and use Network Elements and Other Services from BellSouth in accordance with 47 C.F.R §51.309. Performance Measurements associated with this Attachment 2 are contained in Attachment 9. The quality of the Network Elements provided pursuant to §251, as well as the quality of the access to said Network Elements that BellSouth provides to Access Point, shall be, to the extent technically feasible, at least equal to that which BellSouth provides to itself, and its affiliates.

12 The Parties shall comply with the requirements as set forth in the technical references within this Attachment 2. BellSouth shall comply with the requirements set forth in the technical reference TR73400, as well as any performance or other requirements identified in this Agreement, to the extent that they are consistent with the greater of BellSouth's actual performance or applicable industry standards. If one (1) or more of the requirements set forth in this Agreement are in conflict, the technical reference TR73600 requirements shall apply. If the parties cannot reach agreement, the dispute resolution process set forth in the General Terms and Conditions of this Agreement shall apply.

13 <u>Commingling of Services</u>

13.1 Commingling means the connecting, attaching, or otherwise linking of a Network Element, or a Combination, to one or more Telecommunications Services or facilities that Access Point has obtained at wholesale from BellSouth, or the combining of a Network Element or Combination with one (1) or more such wholesale Telecommunications Services or facilities. Access Point must comply with all rates, terms or conditions applicable to such wholesale Telecommunications Services or facilities.

13.2 Subject to the limitations set forth elsewhere in this Attachment, BellSouth shall not deny access to a Network Element or a Combination on the grounds that one(1) or more of the elements: 1) is connected to, attached to, linked to, or combined with such a facility or service obtained from BellSouth; or 2) shares part of BellSouth's network with access services or inputs for mobile wireless services and/or interexchange services.

13.3 Unless otherwise agreed to by the Parties, the Network Element portion of a commingled circuit will be billed at the rates set forth in Exhibit A and the remainder of the circuit or service will be billed in accordance with BellSouth's tariffed rates or rates set forth in that separate agreement between the Parties.

13.4 When multiplexing equipment is attached to a commingled arrangement, the multiplexing equipment will be billed from the same agreement or the tariff as the higher bandwidth circuit. Central Office Channel Interfaces (COCI) will be billed from the same agreement or tariff as the lower bandwidth circuit.

13.5 Notwithstanding any other provision of this Agreement, BellSouth shall not be obligated to commingle or combine Network Elements or Combinations with any service, network element or other offering that it is obligated to make available only pursuant to Section 271 of the Act.

14 Conversion of Wholesale Services to Network Elements or Network Elements to Wholesale Services

14.1 Upon request, BellSouth shall convert a wholesale service, or group of wholesale services, to the equivalent Network Element or Combination that is available to Access Point pursuant to Section 251 of the Act and under this Agreement, or convert a Network Element or Combination that is available to Access Point pursuant to Section 251 of the Act and under this Agreement to an equivalent wholesale service or group of wholesale services offered by BellSouth (collectively "Conversion"). BellSouth shall charge the applicable nonrecurring switch-as-is rates for Conversions to specific Network Elements or Combinations found in Exhibit A. BellSouth shall also charge the same nonrecurring switch-as-is rates when converting from Network Elements or Combinations. Any rate change resulting from the Conversion will be effective as of the next billing cycle following BellSouth's receipt of a complete and accurate Conversion request from Access Point. A Conversion shall be considered termination for purposes of any volume and/or term commitments and/or grandfathered status between Access Point and BellSouth. Any change from a wholesale service/group of wholesale services to a Network Element/Combination, or from a Network Element/Combination to a wholesale service/group of wholesale services that requires a physical rearrangement will not be considered to be a Conversion for purposes of this Agreement. BellSouth will not require physical rearrangements if the Conversion can be completed through record changes only. Orders for Conversions will be handled in accordance with the guidelines set forth in the Ordering Guidelines and Processes and CLEC Information Packages as referenced in Section 15.3 below.

14.2 Any outstanding conversions shall be effective on or after the effective date of this agreement.

14.3 <u>Ordering Guidelines and Processes</u>

14.3.1 For information regarding Ordering Guidelines and Processes for various Network Elements, Combinations and Other Services, Access Point should refer to the "Guides" section of the BellSouth Interconnection Web site.

14.3.2 Additional information may also be found in the individual CLEC Information Packages located at the "CLEC UNE Products" on BellSouth's Interconnection Web site.

14.3.3 The provisioning of Network Elements, Combinations and Other Services to Access Point's Collocation Space will require cross-connections within the

central office to connect the Network Element, Combinations or Other Services to the demarcation point associated with Access Point's Collocation Space. These cross-connects are separate components that are not considered a part of the Network Element, Combinations or Other Services and, thus, have a separate charge pursuant to this Agreement.

15 Line Splitting

15.1 Line splitting is defined to mean that a provider of data services (a Data LEC) and a provider of voice services (a Voice CLEC) deliver voice and data service to customers over the same Loop. The voice CLEC and Data LEC may be the same or different carriers.

15.2 Line Splitting – UNE-L. If Access Point provides its own switching or obtains switching from a third party, Access Point may engage in line splitting arrangements with another CLEC using a splitter, provided by Access Point, in a Collocation Space at the central office where the loop terminates into a distribution frame or its equivalent.

15.2.1 Provisioning Line Splitting and Splitter Space – UNE-L

15.2.1.1 The requesting carrier provides the splitter when providing Line Splitting with UNE-L. When Access Point owns the splitter, Line Splitting requires the following: a loop from NID at the customer's location to the serving wire center and terminating into a distribution frame or its equivalent.

15.2.1.2 An unloaded 2-wire copper Loop must serve the customer. The meet point for the Voice CLEC and the Data LEC is the point of termination on the MDF for the Data LEC's cable and pairs.

15.3 CLEC Provided Splitter – Line Splitting – UNE-L

15.3.1 To order High Frequency spectrum on a particular Loop, Access Point must have a DSLAM collocated in the ceneetral office that serves the customer of such Loop.

15.3.2 Access Point may purchase, install and maintain central office POTS splitters in its collocation arrangements. Access Point may use such splitters for access to its customers and to provide digital line subscriber services to its customers using the High Frequency Spectrum. Existing Collocation rules and procedures and the terms and conditions relating to Collocating set forth in Attachment 4 Central Office shall apply.

15.3.3 Any splitters installed by Access Point in its collocation arrangement shall comply with ANSI T1.413, Annex E, or any future ANSI splitter Standards. Access Point may install any splitters that BellSouth deploys or permits to be deployed for itself or any BellSouth affiliate.

15.4 Maintenance – Line Splitting – UNE-L

15.4.1 BellSouth will be responsible for repairing voice troubles and the troubles with the physical loop between the NID at the Customer's premises and the termination point.

15.5 Indemnification

15.5.1 Access Point shall indemnify, defend and hold harmless BellSouth from and against any claims, losses, actions, causes of action, suits, demands, damages, injury, and costs including reasonable attorney fees, which arise out of actions related to the other service provider, except to the extent caused by BellSouth's gross negligence or willful misconduct.

15.6 Network Modifications

15.6.1 BellSouth must make all necessary network modifications, including providing non-discriminatory access to operations support systems necessary for pre-ordering, ordering, provisioning, maintenance and repair, and billing for loops used in line splitting arrangements.

15.6.1

16 911 and E911 Databases

16.1 BellSouth shall provide Access Point with nondiscriminatory access to 911 and E911 databases on an unbundled basis, in accordance with 47 C.F.R. § 51.319 (f).

16.2 The ALI/DMS database contains end user information (including name, address, telephone information, and sometimes special information from the local service provider or end user) used to determine to which PSAP to route the call. The ALI/DMS database is used to provide enhanced routing flexibility for E911. Access Point will be required to provide the BellSouth 911 database vendor daily service order updates to E911 database in accordance with Section 16.3.1 below.

16.3 Technical Requirements

16.3.1 BellSouth's 911 database vendor shall provide Access Point the capability of providing updates to the ALI/DMS database through a specified electronic interface. Access Point shall contact BellSouth's 911 database vendor directly to request interface. Access Point shall provide updates directly to BellSouth's 911 database vendor on a daily basis. Updates shall be the responsibility of Access Point and BellSouth shall not be liable for the transactions between Access Point and BellSouth's 911 database vendor.

16.3.2 It is Access Point's responsibility to retrieve and confirm statistical data and to correct errors obtained from BellSouth's 911 database vendor on a daily basis. All errors will be assigned a unique error code and the description of the error and

the corrective action is described in the CLEC Users Guide for Facility Based Providers that is found on the BellSouth Interconnection Web site.

16.3.3 Access Point shall conform to the BellSouth standards as described in the CLEC Users Guide to E911 for Facilities Based Providers that is located on the BellSouth's Interconnection Web site.

16.3.4 Stranded Unlocks are defined as end user records in BellSouth's ALI/DMS database that have not been migrated for over ninety (90) days to Access Point, as a new provider of local service to the end user. Stranded Unlocks are those end user records that have been "unlocked" by the previous local exchange carrier that provided service to the end user and are open for Access Point to assume responsibility for such records.

16.3.5 Based upon end user record ownership information available in the NPAC database, BellSouth shall provide a Stranded Unlock annual report to Access Point that reflects all Stranded Unlocks that remain in the ALI/DMS database for over ninety (90) days. Access Point shall review the Stranded Unlock report, identify its end user records and request to either delete such records or migrate the records to Access Point within two (2) months following the date of the Stranded Unlock report provided by BellSouth. Access Point shall reimburse BellSouth for any charges BellSouth's database vendor imposes on BellSouth for the deletion of Access Point's records.

17 Fiber to the Home (FTTH) loops are local loops consisting entirely of fiber optic cable, whether dark or lit, serving an customer's premises or, in the case of predominantly residential multiple dwelling units (MDUs), a fiber optic cable, whether dark or lit, that extends to the MDU minimum point of entry (MPOE). Fiber to the Curb (FTTC) loops are local loops consisting of fiber optic cable connecting to a copper distribution plant that is not more than five hundred (500) feet from the customer's premises or, in the case of predominantly residential MDUs, not more than five hundred (500) feet from the MDU's MPOE. The fiber optic cable in a FTTC loop must connect to a copper distribution plant at a serving area interface from which every other copper distribution subloop also is not more than five hundred (500) feet from the respective customer's premises. FTTH/FTTC loops do not include local loops to predominately business MDUs.

17.1 In new build (Greenfield) areas, where BellSouth has only deployed FTTH/FTTC facilities, BellSouth is under no obligation to provide such FTTH and FTTC Loops. FTTH facilities include fiber loops deployed to the MPOE of a MDU that is predominately residential regardless of the ownership of the inside wiring from the MPOE to each Customer in the MDU.

18 A hybrid loop is a local loop, composed of both fiber optic cable, usually in the feeder plant, and copper twisted wire or cable, usually in the distribution plant. BellSouth shall provide Access Pointwith nondiscriminatory access to the time division multiplexing features, functions and capabilities of such hybrid loop,

including DS1 and DS3 capacity under Section 251 where impairment exists, on an unbundled basis to establish a complete transmission path between BellSouth's central office and an customer's premises.

18.1 BellSouth shall not engineer the transmission capabilities of its network in a manner, or engage in any policy, practice, or procedure, that disrupts or degrades access to a local loop or subloop, including the time division multiplexing-based features, functions, and capabilities of a hybrid loop, for which a requesting telecommunications carrier may obtain or has obtained access pursuant to this Attachment.

19 Routine Network Modifications

19.1 BellSouth will perform Routine Network Modifications (RNM) in accordance with FCC 47 CFR 51.319 (a)(7) and (e)(4) for Loops and Dedicated Transport provided under this Attachment. If BellSouth normally provides such RNM for its own customers and has recovered the costs for performing such modifications through the rates set forth in Exhibit A, then BellSouth will perform such RNM at no additional charge. A routine network modification is an activity that BellSouth regularly undertakes for its own customers. Routine network modifications include, but are not limited to, rearranging or splicing of cable; adding an equipment case; adding a doubler or repeater; adding a smart jack; installing a repeater shelf; adding a line card; and deploying a new multiplexer or reconfiguring an existing multiplexer. Routine network modifications may entail activities such as accessing manholes, deploying bucket trucks to reach aerial cable, and installing equipment casings. Routine network modifications do not include the construction of a new loop, or the installation of new aerial or buried cable for a CLEC.

19.2 RNM will be performed within the intervals established for the Network Element and subject to the performance measurements and associated remedies set forth in Attachment 9 of this Agreement. If BellSouth does not normally provide such RNM for its own customers, and has not recovered the costs of such RNM in the rates set forth in Exhibit A, then such request will be handled as a project on an individual case basis. BellSouth will provide a price quote for the request and, upon receipt of payment from Access Point, BellSouth will perform the RNM.

20 Line Conditioning

20.1 Line Conditioning is defined as routine network modification that BellSouth regularly undertakes to provide xDSL services to its own customers. This may include the removal of any device, from a copper Loop or copper Subloop that may diminish the capability of the Loop or Subloop to deliver high-speed switched wireline telecommunications capability, including xDSL service. Such devices include, load coils, excessive bridged taps, low pass filters, and range extenders. Excessive bridged taps are bridged taps that serve no network design

purpose and that are beyond the limits set according to industry standards and/or the BellSouth's TR 73600 Unbundled Local Loop Technical Specification.

20.2 BellSouth will remove load coils only on copper Loops and Subloops that are less than eighteen thousand (18,000) feet in length.

20.3 Any copper loop being ordered by Access Point which has over six thousand (6,000) feet of combined bridged tap will be modified, upon request from Access Point, so that the loop will have a maximum of six thousand (6,000) feet of bridged tap. This modification will be performed at no additional charge to Access Point. Line conditioning orders that require the removal of other bridged tap that serves no network design purpose on a copper Loop that will result in a combined total of bridged tap between two thousand five hundred (2,500) and six thousand (6,000) feet will be performed at the rates set forth in Exhibit A.

20.4 Access Point may request removal of any unnecessary and non excessive bridged tap (bridged tap between zero (0) and two thousand five hundred (2,500) feet which serves no network design purpose), at rates pursuant to BellSouth's SC Process as mutually agreed to by the Parties.

20.5 Rates for Unbundled Loop Modification (ULM) are as set forth in Exhibit A.

20.6 BellSouth will not modify a Loop in such a way that it no longer meets the technical parameters of the original Loop type (e.g., voice grade, ADSL, etc.) being ordered.

20.7 If Access Point requests ULM on a reserved facility for a new Loop order, BellSouth may perform a pair change and provision a different Loop facility in lieu of the reserved facility with ULM if feasible. The Loop provisioned will meet or exceed specifications of the requested Loop facility as modified. Access Point will not be charged for ULM if a different Loop is provisioned. For Loops that require a DLR or its equivalent, BellSouth will provide LMU detail of the Loop provisioned.

20.8 Access Point will request Loop make up information pursuant to this Attachment prior to submitting a service inquiry and/or a LSR for the Loop type that Access Point desires BellSouth to condition.

20.9 When requesting ULM for a Loop that BellSouth has previously provisioned for Access Point, Access Point will submit a SI to BellSouth. If a spare Loop facility that meets the Loop modification specifications requested by Access Point is available at the location for which the ULM was requested, Access Point will have the option to change the Loop facility to the qualifying spare facility rather than to provide ULM. In the event that BellSouth changes the Loop facility in lieu of providing ULM, Access Point will not be charged for ULM but will only be charged the service order charges for submitting an order.

21 In FTTH/FTTC overbuild situations where BellSouth also has copper Loops, BellSouth may make those copper Loops available to Access Point on an unbundled basis, until such time as BellSouth chooses to retire those copper Loops using the FCC's network disclosure requirements. Alternatively, BellSouth will offer a sixty-four (64) Kbps second voice grade channel over its FTTH/FTTC facilities. BellSouth's retirement of copper Loops must comply with applicable law.

21.1 Furthermore, in FTTH/FTTC overbuild areas where BellSouth has not yet retired copper facilities, BellSouth is not obligated to ensure that such copper Loops in that area are capable of transmitting signals prior to receiving a request for access to such Loops by Access Point. If a request is received by BellSouth for a copper Loop, and the copper facilities have not yet been retired, BellSouth will restore the copper Loop to serviceable condition if technically feasible. In these instances of Loop orders in a FTTH/FTTC overbuild area, BellSouth's standard Loop provisioning interval will not apply, and the order will be handled on a project basis by which the Parties will negotiate the applicable provisioning interval.

22 EELs Audit Provisions

22.1 BellSouth may, on an annual basis audit Access Point's records in order to verify compliance with the high capacity EEL eligibility criteria. To invoke its limited right to audit, BellSouth will send a Notice of Audit to Access Point. Such Notice of Audit will be delivered to Access Point no less than thirty (30) days prior to the date upon which BellSouth seeks to commence an audit.

22.2 The audit shall be conducted by a third party independent auditor, retained and paid for by BellSouth. The audit must be performed in accordance with the standards established by the American Institute for Certified Public Accountants (AICPA) which will require the auditor to perform an "examination engagement" and issue an opinion regarding Access Point's compliance with the high capacity EEL eligibility criteria. AICPA standards and other AICPA requirements will be used to determine the independence of an auditor. The independent auditor's report will conclude whether Access Point complied in all material respects with the applicable service eligibility criteria. Consistent with standard auditing practices, such audits require compliance testing designed by the independent auditor.

22.3 To the extent the independent auditor's report concludes that Access Point failed to comply with the service eligibility criteria, Access Point must true-up any difference in payments, convert all noncompliant circuits to the appropriate service, and make the correct payments on a going-forward basis.

22.4 To the extent the independent auditor's report concludes that Access Point failed to comply in all material respects with the service eligibility criteria, Access Point shall reimburse BellSouth for the cost of the independent auditor. To the extent

the independent auditor's report concludes that Access Point did comply in all material respects with the service eligibility criteria, BellSouth will reimburse Access Point for its reasonable and demonstrable costs associated with the audit. Access Point will maintain appropriate documentation to support its certifications. The Parties shall provide such reimbursement within thirty (30) days of receipt of a statement of such costs.

23 Access Point shall not obtain a Network Element for the exclusive provision of mobile wireless services or interexchange services.

24 Facilities that do not terminate at a demarcation point at an customer premises, including, by way of example, but not limited to, facilities that terminate to another carrier's switch or premises, a cell site, Mobile Switching Center or base station, do not constitute local Loops under Section 251, except to the extent that Access Point may require Loops to such locations for the purpose of providing telecommunications services to its personnel at those locations.

25 Subloop Elements

25.1 Where facilities permit, BellSouth shall offer access to its Unbundled Subloop (USL) elements as specified herein.

25.2 <u>Unbundled Subloop Distribution (USLD)</u>

25.2.1 The USLD facility is a dedicated transmission facility that BellSouth provides from a customer's point of demarcation to a BellSouth cross-connect device. The BellSouth cross-connect device may be located within a remote terminal (RT) or a stand-alone cross-box in the field or in the equipment room of a building. The USLD media is a copper twisted pair that can be provisioned as a 2-wire or 4-wire facility. BellSouth will make available the following subloop distribution offerings where facilities exist:

USLD – Voice Grade (USLD-VG)
Unbundled Copper Subloop (UCSL)
USLD – Intrabuilding Network Cable (USLD-INC (aka riser cable))

25.2.2 USLD-VG is a copper subloop facility from the cross-box in the field up to and including the point of demarcation at the customer's premises and may have load coils.

25.2.3 UCSL is a copper facility eighteen thousand (18,000) feet or less in length provided from the cross-box in the field up to and including the customer's point of demarcation. If available, this facility will not have any intervening equipment such as load coils between the customer and the cross-box.

25.2.4 If Access Point requests a UCSL and it is not available, Access Point may request the copper Subloop facility be modified pursuant to the ULM process to remove load coils and/or excessive bridged taps. If load coils and/or excessive bridged taps are removed, the facility will be classified as a UCSL.

25.2.5 USLD-INC is the distribution facility owned or controlled by BellSouth inside a building or between buildings on the same property that is not separated by a public street or road. USLD-INC includes the facility from the cross-connect device in the building equipment room up to and including the point of demarcation at the customer's premises.

25.2.6 Upon request for USLD-INC from Access Point, BellSouth will install a cross-connect panel in the building equipment room for the purpose of accessing USLD-INC pairs from a building equipment room. The cross-connect panel will function as a single point of interconnection (SPOI) for USLD-INC and will be accessible by multiple carriers as space permits. BellSouth will place cross-connect blocks in twenty five (25) pair increments for Access Point's use on this cross-connect panel. Access Point will be responsible for connecting its facilities to the twenty five (25) pair cross-connect block(s).

25.2.7 For access to Voice Grade USLD and UCSL, Access Point shall install a cable to the BellSouth cross-box pursuant to the terms and conditions for physical collocation for remote sites set forth in Attachment 4. This cable would be connected by a BellSouth technician within the BellSouth cross-box during the set-up process. Access Point's cable pairs can then be connected to BellSouth's USL within the BellSouth cross-box by the BellSouth technician.

25.2.8 Through the SI process, BellSouth will determine whether access to USLs at the location requested by Access Point is technically feasible and whether sufficient capacity exists in the cross-box. If existing capacity is sufficient to meet Access Point's request, then BellSouth will perform the site set-up as described in the CLEC Information Package, located at BellSouth's Interconnection Web site.

25.2.9 The site set-up must be completed before Access Point can order Subloop pairs. For the site set-up in a BellSouth cross-connect box in the field, BellSouth will perform the necessary work to splice Access Point's cable into the cross-connect box. For the site set-up inside a building equipment room, BellSouth will perform the necessary work to install the cross-connect panel and the connecting block(s) that will be used to provide access to the requested USLs.

25.2.10 Once the site set-up is complete, Access Point will request Subloop pairs through submission of a LSR form to the LCSC. OC is required with USL pair provisioning when Access Point requests reuse of an existing facility, and the OC charge shall be billed in addition to the USL pair rate. For expedite requests by Access Point for Subloop pairs, expedite charges will apply for intervals less than five (5) days.

25.2.11 USLs will be provided in accordance with BellSouth's TR73600 Unbundled Local Loop Technical Specifications.

25.3 <u>Unbundled Network Terminating Wire (UNTW)</u>

25.3.1 NTW is unshielded twisted copper wiring that is used to extend circuits from an intra-building network cable terminal or from a building entrance terminal to an

individual customer's point of demarcation. It is the final portion of the Loop that in multi-subscriber configurations represents the point at which the network branches out to serve individual subscribers.

25.3.2 This element will be provided in MDUs and/or Multi-Tenants Units (MTUs) where either Party owns wiring all the way to the customer's premises. Neither Party will provide this element in locations where the property owner provides its own wiring to the customer's premises, where a third party owns the wiring to the customer's premises.

25.3.3 Requirements

25.3.3.1 On a multi-unit premises, upon request of the other Party (Requesting Party), the Party owning the network terminating wire (Provisioning Party) will provide access to UNTW pairs on an Access Terminal that is suitable for use by multiple carriers at each Garden Terminal or Wiring Closet.

25.3.3.2 The Provisioning Party shall not be required to install new or additional NTW beyond existing NTW to provision the services of the Requesting Party.

25.3.3.3 In existing MDUs and/or MTUs in which BellSouth does not own or control wiring (INC/NTW) to the customers premises, and Access Point does own or control such wiring, Access Point will install UNTW Access Terminals for BellSouth under the same terms and conditions as BellSouth provides UNTW Access Terminals to Access Point.

25.3.3.4 In situations in which BellSouth activates a UNTW pair, BellSouth will compensate Access Point for each pair activated commensurate to the price specified in Access Point's Agreement.

25.3.3.5 Upon receipt of the UNTW SI requesting access to the Provisioning Party's UNTW pairs at a multi-unit premises, representatives of both Parties will participate in a meeting at the site of the requested access. The purpose of the site visit will include discussion of the procedures for installation and location of the Access Terminals. By request of the Requesting Party, an Access Terminal will be installed either adjacent to each of the Provisioning Party's Garden Terminal or inside each Wiring Closet. The Requesting Party will deliver and connect its central office facilities to the UNTW pairs within the Access Terminal. The Requesting Party may access any available pair on an Access Terminal. A pair is available when a pair is not being utilized to provide service or where the customer has requested a change in its local service provider to the Requesting Party. Prior to connecting the Requesting Party's service on a pair previously used by the Provisioning Party, the Requesting Party is responsible for ensuring the customer is no longer using the Provisioning Party's service or another CLEC's service before accessing UNTW pairs.

25.3.3.6 Access Terminal installation intervals will be established on an individual case basis.

25.3.3.7 The Requesting Party is responsible for obtaining the property owner's permission for the Provisioning Party to install an Access Terminal(s) on behalf of the Requesting Party. The submission of the SI by the Requesting Party will serve as certification by the Requesting Party that such permission has been obtained. If the property owner objects to Access Terminal installations that are in progress or within thirty (30) days after completion and demands removal of Access Terminals, the Requesting Party will be responsible for costs associated with removing Access Terminals and restoring the property to its original state prior to Access Terminals being installed.

25.3.3.8 The Requesting Party shall indemnify and hold harmless the Provisioning Party against any claims of any kind that may arise out of the Requesting Party's failure to obtain the property owner's permission. The Requesting Party will be billed for nonrecurring and recurring charges for accessing UNTW pairs at the time the Requesting Party activates the pair(s). The Requesting Party will notify the Provisioning Party within five (5) business days of activating UNTW pairs using the LSR form.

25.3.3.9 If a trouble exists on a UNTW pair, the Requesting Party may use an alternate spare pair that serves that customer if a spare pair is available. In such cases, the Requesting Party will re-terminate its existing jumper from the defective pair to the spare pair. Alternatively, the Requesting Party will isolate and report troubles in the manner specified by the Provisioning Party. The Requesting Party must tag the UNTW pair that requires repair. If the Provisioning Party dispatches a technician on a reported trouble call and no UNTW trouble is found, the Provisioning Party will charge Requesting Party for time spent on the dispatch and testing the UNTW pair(s).

25.3.3.10 If the Requesting Party initiates the Access Terminal installation and the Requesting Party has not activated at least ten percent (10%) of the capacity of the Access Terminal installed pursuant to the Requesting Party's request for an Access Terminal within six (6) months of installation of the Access Terminal, the Provisioning Party will bill the Requesting Party a nonrecurring charge equal to the actual cost of provisioning the Access Terminal.

25.3.3.11 If the Provisioning Party determines that the Requesting Party is using the UNTW pairs without reporting the activation of the pairs, the Requesting Party will be billed for the use of that pair back to the date the customer began receiving service from the Requesting Party at that location. Upon request, the Requesting Party will provide copies of its billing record to substantiate such date. If the Requesting Party fails to provide such records, then the Provisioning Party will bill the Requesting Party back to the date of the Access Terminal installation.

<u>Issue 1</u> – What is the appropriate language to implement the FCC's transition plan for: (1) switching; (2) high-capacity loops; and (3) dedicated transport as detailed in the FCC's TRRO, issued February 4, 2005?

1. 4-wire Unbundled DS1 Digital Loop

1.1 This is a designed 4-wire Loop that is provisioned according to industry standards for DS1 or Primary Rate ISDN services and will come standard with a test point, OC, and a DLR. A DS1 Loop may be provisioned over a variety of loop transmission technologies including copper, HDSL-based technology or fiber optic transport systems. It will include a 4-wire DS1 Network Interface at the End User's location.

1.2 <u>DS3 Loop.</u> DS3 Loop is a two-point digital transmission path which provides for simultaneous two-way transmission of serial, bipolar, return-to-zero isochronous digital electrical signals at a transmission rate of forty-four point seven thirty-six (44.736) megabits per second (Mbps) that is dedicated to the use of the ordering CLEC in its provisioning of local exchange and associated exchange access services. It may provide transport for twenty-eight (28) DS1 channels, each of which provides the digital equivalent of twenty-four (24) analog voice grade channels. The interface to unbundled dedicated DS3 transport is a metallic-based electrical interface.

1.3 BellSouth shall not provide more than ten (10) unbundled DS1 Loops to Access Point at any single building in which DS1 Loops are available as unbundled loops. Access Point may obtain a maximum of a single Unbundled DS3 loop to any single building in which DS3 Loops are available as Unbundled Loops.

1.4 For purposes of this Section 2, a Business Line is defined in 47 C.F.R. § 51.5.

1.5 Notwithstanding anything to the contrary in this Agreement, and except as set forth in Section 8 below, BellSouth shall make available DS1 and DS3 Loops as described in this Section 1 except as described below:

1.5.1 DS1 Loops at any location within the service area of a wire center containing 60,000 or more Business Lines and four (4) or more fiber-based collocators.

1.5.2 DS3 Loops at any location within the service area of a wire center containing 38,000 or more Business Lines and four (4) or more fiber-based collocators.

1.6 A list of wire centers meeting the criteria set forth in Sections 1.5.1 and 1.5.2 above as ordered by the North Carolina Utilities Commission in Docket No. P-55, Sub 1549 (Initial Wire Center List), is attached to

BellSouth's Carrier Notification Letter SN91086050, dated March 21, 2006, which is available on BellSouth's Interconnection Services Web site.

1.7 Once a wire center exceeds both of the thresholds set forth in Section 1.5 above, no future DS1 Loop unbundling will be required in that wire center.

1.8 Once a wire center exceeds both of the thresholds set forth in Section 1.5 above, no future DS3 Loop unbundling will be required in that wire center.

2 Dedicated Transport and Dark Fiber Transport

2.1 Dedicated Transport. Dedicated Transport is defined as BellSouth's transmission facilities between wire centers or switches owned by BellSouth, or between wire centers or switches owned by BellSouth and switches owned by Access Point, including but not limited to DS1, DS3 and OCn level services, as well as dark fiber, dedicated to Access Point. BellSouth shall not be required to provide access to OCn level Dedicated Transport under any circumstances pursuant to this Agreement.

2.1.1 Access Point may obtain a maximum of twelve (12) unbundled DS3 Dedicated Transport circuits on each route where DS3 Dedicated Transport is available as a Network Element, and a maximum of ten (10) unbundled DS1 Dedicated Transport circuits on each Route where there is no 251(c)(3) unbundling obligation for DS3 Dedicated Transport but for which impairment exists for DS1 Dedicated Transport.

2.1.2 For purposes of this Section .2, a Business Line is as defined in 47 C.F.R. § 51.5.

2.1.3 Notwithstanding anything to the contrary in this Agreement, BellSouth shall make available Dedicated Transport as described in this Section 2 except as described below:

2.1.3.1 DS1 Dedicated Transport where both wire centers at the end points of the route contain 38,000 or more Business Lines or four (4) or more fiber-based collocators.

2.1.3.2 DS3 Dedicated Transport where both wire centers at the end points of the route contain 24,000 or more Business Lines or three (3) or more fiber-based collocators.

2.1.4 A list of wire centers meeting the criteria set forth in Sections 2.1.3.1 or 2.1.3.2 above as ordered by the North Carolina Utilities Commission in Docket No. P-55, Sub 1549 (Initial Wire Center List), is attached to BellSouth's Carrier Notification Letter SN91086050, March 21, 2006, which is available on BellSouth's Interconnection Services Web site.

2.1.5 Once a wire center exceeds either of the thresholds set forth in Section 2.1.3 above, no future DS1 Dedicated Transport unbundling will be required in that wire center.

2.1.6 Once a wire center exceeds either of the thresholds set forth in Section 2.1.3 above, no future DS3 Dedicated Transport will be required in that wire center.

2.2 Dark Fiber Transport. Dark Fiber Transport is defined as Dedicated Transport that consists of unactivated optical interoffice transmission facilities without attached signal regeneration, multiplexing, aggregation or other electronics.

2.2.1 For purposes of this Section 2.2, a Business Line is as defined in 47 C.F.R. § 51.5.

2.2.2 Notwithstanding anything to the contrary in this Agreement, BellSouth shall make available Dark Fiber Transport as described in this Section 5.1 except as described below:

2.2.2.1 Dark Fiber Transport where both wire centers at the end points of the route contain twenty-four thousand (24,000) or more Business Lines or three (3) or more fiber-based collocators.

2.2.3 A list of wire centers meeting the criteria set forth in Section 2.2.2.1 above as ordered by the North Carolina Utilities Commission in Docket No. P-55, Sub 1549, ("Initial List") is attached to BellSouth's Carrier Notification Letter SN91086050, March 21, 2006, which is available on BellSouth's Interconnection Services Web site.

2.2.4 Once a wire center exceeds the threshold set forth in Section 2.2.2.1 above, no future Dark Fiber Transport unbundling will be required in that wire center.

3 Prior to submitting an order pursuant to this Agreement for high capacity (DS1 or above) Dedicated Transport or high capacity Loops, Access Point shall undertake a reasonably diligent inquiry to determine whether Access Point is entitled to unbundled access to such Network Elements in accordance with the terms of this Agreement. By submitting any such order, Access Point self-certifies that to the best of Access Point's knowledge, the high capacity Dedicated Transport or high capacity Loop requested is available as a Network Element pursuant to this Agreement. Upon receiving such order, BellSouth shall process the request in reliance upon Access Point's self-certification. To the extent BellSouth believes that such request does not comply with the terms of this Agreement, BellSouth shall seek dispute resolution in accordance with the General Terms and Conditions of this Agreement. If BellSouth prevails in such dispute resolution proceeding, Access Point shall be liable to BellSouth for the difference between the rate for the equivalent BellSouth alternative

arrangement and the self certified UNE, plus interest, on such rate differential.

<u>Issue 3</u> –What is the appropriate language to implement BellSouth's obligation to provide Section 251 unbundled access to high-capacity loops and dedicated transport and how should the following terms be defined? (i) Business Line; (ii) Fiber-Based Collocator; (iii) Building (iv) Route?

4 A Business Line is defined in 47 CFR § 51.5.

5 A Fiber-Based Collocator is defined in 47 CFR § 51.5.

6 A Building is defined as a permanent physical structure including, but not limited to, a structure in which people reside, or conduct business or work on a daily basis and through which there is one centralized point of entry in the structure through which all telecommunications services must transit. As an example only, a high rise office building with a general telecommunications equipment room through which all telecommunications services to that building's tenants must pass would be a single "building for purposes of this Attachment 2. Two or more physical areas served by a individual points of entry through which telecommunications services must transit will be considered separate buildings. For instance, a strip mall with individual businesses obtaining telecommunications services from different access points on the building(s) will be considered individual buildings, even though they might share common walls.

7 A route is defined as a transmission path between one of BellSouth's wire centers or switches. Transmission paths between identical end points are the same "route", irrespective of whether they pass through the same intermediate wire centers or switches, if any. For the purposes of determining routes wire centers include non-BellSouth locations where BellSouth has reverse collocated switches with line side functionality that terminate loops.

<u>Issue 6 –</u> What language should be included in agreements to reflect the procedures identified in Matrix Item No. 5(b)?

8 **<u>Modifications and Updates to the Wire Center List and Subsequent Transition Periods for DS1 and/or DS3 Loops</u>**

8.1 In the event BellSouth identifies additional wire centers that meet the criteria set forth in Section 1.5 above, but that were not included in the Initial Wire Center List, BellSouth shall include such additional wire centers in a carrier notification letter (CNL). Each such list of additional wire centers shall be considered a "Subsequent Wire Center List".

8.2 Effective thirty (30) business days after the date of a BellSouth CNL providing a Subsequent Wire Center List, BellSouth shall not be required to unbundle DS1 and/or DS3 Loops, as applicable, in such additional wire center(s).

8.3 For purposes of this Section 8, BellSouth shall make available DS1 and DS3 Loops that were in service for Access Point in a wire center on the Subsequent Wire Center List as of the thirtieth (30th) business day after the date of BellSouth's CNL identifying the Subsequent Wire Center List (Subsequent Embedded Base) until one hundred and fifty (150) days after the thirtieth business day from the date of BellSouth's CNL identifying the Subsequent Wire Center List (Subsequent Transition Period).

8.4 Subsequent disconnects or loss of End Users shall be removed from the Subsequent Embedded Base.

8.5 The rates set forth in Exhibit A plus fifteen percent (15%) shall apply to the Subsequent Embedded Base during the Subsequent Transition Period.

8.6 No later than forty (40) days from BellSouth's CNL identifying the Subsequent Wire Center List, Access Point shall submit a spreadsheet(s) identifying the Subsequent Embedded Base of circuits to be disconnected or converted to other BellSouth services. The Parties shall negotiate a project schedule for the Conversion of the Subsequent Embedded Base.

8.7 If Access Point fails to submit the spreadsheet(s) specified in Section 8.6 above for all of its Subsequent Embedded Base within forty (40) days after the date of BellSouth's CNL identifying the Subsequent Wire Center List, BellSouth will identify Access Point's remaining Subsequent Embedded Base, if any, and will transition such circuits to the equivalent tariffed BellSouth service(s). Those circuits identified and transitioned by BellSouth shall be subject to the applicable as-is charges as set forth in this Agreement.

8.8 For Subsequent Embedded Base circuits converted pursuant to Section 8.6 above or transitioned pursuant to Section 8.7 above, the applicable recurring tariff charges shall apply as of the first day after the end of the Subsequent Transition Period.

8.9 Where facilities are available, BellSouth will install Loops in compliance with BellSouth's Products and Services Interval Guide available at BellSouth's Web site. For orders of fifteen (15) or more Loops, the installation and any applicable Order Coordination as described below will be handled on a project basis, and the intervals will be set by the BellSouth project manager for that order. When Loops require a Service Inquiry (SI) prior to issuing the order to determine if facilities are available, the interval for the SI process is separate from the installation interval.

8.10 In the event that (1) BellSouth designates a wire center as non-impaired, (2) Access Point converts existing UNEs to other services or orders new services as services other than UNEs, (3) Access Point otherwise would have been entitled to UNEs in such wire center at the time alternative services provisioned, and (4) BellSouth acknowledges or a state or federal agency regulatory body with authority determines that, at the time BellSouth designated such wire center as non-impaired, such wire center did not meet the FCC's non-impairment criteria, then upon request of Access Point, BellSouth shall transition to UNEs any alternative services in such wire center that were established after such wire center was designated as non-impaired. In such instances, BellSouth shall refund Access Point the difference between the rate paid by Access Point for such services and the applicable UNE rate, including but not limited to any charges associated with the unnecessary conversion from UNE to other wholesale services.

9 <u>Modifications and Updates to the Wire Center List and Subsequent Transition Periods for DS1 and/or DS3 Transport</u>

9.1 In the event BellSouth identifies additional wire centers that meet the criteria set forth in Sections 2.1.3.1 or 2.1.3.2 above, but that were not included in the Initial Wire Center List, BellSouth shall include such additional wire centers in CNL. Each such list of additional wire centers shall be considered a Subsequent Wire Center List.

9.2 Effective thirty (30) business days after the date of a BellSouth CNL providing a Subsequent Wire Center List, BellSouth shall not be required to provide DS1 and DS3 Dedicated Transport, as applicable, in such additional wire center(s).

9.3 For purposes of this Section 9, BellSouth shall make available DS1 and DS3 Dedicated Transport that was in service for Access Point in a wire center on the Subsequent Wire Center List as of the thirtieth (30th) business day after the date of BellSouth's CNL identifying the Subsequent Wire Center List (Subsequent Embedded Base) until one hundred and fifty (150) days after the thirtieth (30th) business day from the date of BellSouth's CNL identifying the Subsequent Wire Center List (Subsequent Transition Period).

9.4 Subsequent disconnects or loss of End Users shall be removed from the Subsequent Embedded Base.

9.5 The rates set forth in Exhibit A plus fifteen percent (15%) shall apply to the Subsequent Embedded Base during the Subsequent Transition Period.

9.6 No later than forty (40) days from BellSouth's CNL identifying the Subsequent Wire Center List Access Point shall submit a spreadsheet(s) identifying the Subsequent Embedded Base of circuits to be disconnected

or converted to other BellSouth services. The Parties shall negotiate a project schedule for the Conversion of the Subsequent Embedded Base.

9.7 If Access Point fails to submit the spreadsheet(s) specified in Section 9.6 above for all of its Subsequent Embedded Base within forty (40) days after the date of BellSouth's CNL identifying the Subsequent Wire Center List, BellSouth will identify Access Point's remaining Subsequent Embedded Base, if any, and will transition such circuits to the equivalent tariffed BellSouth service(s). Those circuits identified and transitioned by BellSouth shall be subject to the applicable as-is charges as set forth in this Agreement.

9.8 For Subsequent Embedded Base circuits converted pursuant to Section 9.6 above or transitioned pursuant to Section 9.7 above, the applicable recurring tariff charges shall apply as of the first day after the end of the Subsequent Transition Period.

9.9 In the event that (1) BellSouth designates a wire center as non-impaired, (2) Access Point converts existing UNEs to other services or orders new services as services other than UNEs, (3) Access Point otherwise would have been entitled to UNEs in such wire center at the time alternative services provisioned, and (4) BellSouth acknowledges or a state or federal agency regulatory body with authority determines that, at the time BellSouth designated such wire center as non-impaired, such wire center did not meet the FCC's non-impairment criteria, then upon request of Access Point, BellSouth shall transition to UNEs any alternative services in such wire center that were established after such wire center was designated as non-impaired. In such instances, BellSouth shall refund Access Point the difference between the rate paid by Access Point for such services and the applicable UNE rate, including but not limited to any charges associated with the unnecessary conversion from UNE to other wholesale services.

10 Modifications and Updates to the Wire Center List and Subsequent Transition Periods for Dark Fiber Transport

10.1 In the event BellSouth identifies additional wire centers that meet the criteria set forth in Section 2.2.2.1 above, but that were not included in the Initial Wire Center List, BellSouth shall include such additional wire centers in a CNL. Each such list of additional wire centers shall be considered a "Subsequent Wire Center List".

10.2 Effective thirty (30) business days after the date of a BellSouth CNL providing a Subsequent Wire Center List, BellSouth shall not be required to provide unbundled access to Dark Fiber Transport, as applicable, in such additional wire center(s), except pursuant to the self-certification process as set forth in Section 3 above.

10.3 For purposes of this Section 10, BellSouth shall make available DS1 and DS3 Loops that were in service for Access Point in a wire center on the Subsequent Wire Center List as of the thirtieth (30th) business day after the date of BellSouth's CNL identifying the Subsequent Wire Center List (Subsequent Embedded Base) until one hundred and fifty (150) days after the thirtieth (30th) business day from the date of BellSouth's CNL identifying the Subsequent Wire Center List (Subsequent Transition Period).

10.4 Subsequent disconnects or loss of End Users shall be removed from the Subsequent Embedded Base.

10.5 The rates set forth in Exhibit At plus fifteen percent (15%) shall apply to the Subsequent Embedded Base during the Subsequent Transition Period.

10.6 No later than forty (40) days from BellSouth's CNL identifying the Subsequent Wire Center List Access Point shall submit a spreadsheet(s) identifying the Subsequent Embedded Base of circuits to be disconnected or converted to other BellSouth services. The Parties shall negotiate a project schedule for the Conversion of the Subsequent Embedded Base.

10.7 If Access Point fails to submit the spreadsheet(s) specified in Section 10.6 above for all of its Subsequent Embedded Base within forty (40) days after the date of BellSouth's CNL identifying the Subsequent Wire Center List, BellSouth will identify Access Point's remaining Subsequent Embedded Base, if any, and will transition such circuits to the equivalent tariffed BellSouth service(s). Those circuits identified and transitioned by BellSouth shall be subject to the applicable switch-as-is charges as set forth in this Agreement.

10.8 For Subsequent Embedded Base circuits converted pursuant to Section 10.6 above or transitioned pursuant to Section 10.7 above, the applicable recurring tariff charges shall apply as of the first day after the end of the Subsequent Transition Period.

10.9 In the event that (1) BellSouth designates a wire center as non-impaired, (2) Access Point converts existing UNEs to other services or orders new services as services other than UNEs, (3) Access Point otherwise would have been entitled to UNEs in such wire center at the time alternative services provisioned, and (4) BellSouth acknowledges or a state or federal agency regulatory body with authority determines that, at the time BellSouth designated such wire center as non-impaired, such wire center did not meet the FCC's non-impairment criteria, then upon request of Access Point, BellSouth shall transition to UNEs any alternative services in such wire center that were established after such wire center was designated as non-impaired. In such instances, BellSouth shall refund Access Point the difference between the rate paid by Access Point for such services and the applicable UNE rate, including but not limited to any

charges associated with the unnecessary conversion from UNE to other wholesale services.

Issue 7 – Are HDSL-capable copper loops the equivalent of DS1 loops for the purpose of evaluating impairment?

11 2-wire or 4-wire HDSL-Compatible Loop. This is a designed Loop that meets Carrier Serving Area (CSA) specifications, may be up to twelve thousand (12,000) feet long and may have up to two thousand five hundred (2,500) feet of bridged tap (inclusive of Loop length). It may be a 2-wire or 4-wire circuit and will come standard with a test point, OC, and a DLR.

12 4-wire Unbundled DS1 Digital Loop. This is a designed 4-wire Loop that is provisioned according to industry standards for DS1 or Primary Rate ISDN services and will come standard with a test point, OC, and a DLR. A DS1 Loop may be provisioned over a variety of loop transmission technologies including copper, HDSL-based technology or fiber optic transport systems. It will include a 4-wire DS1 Network Interface at the End User's location.

Issue 8 – (a) Does the Commission have the authority to require BellSouth to include in its ICAs entered into pursuant to Section 252, network elements either under state law o pursuant to Section 271 or any other federal law other than Section 251? (b) If the answer to part (a) is affirmative in any respect, does the Commission have the authority to establish rates for such element? (c) If the answer to part (a) or (b) is affirmative in any respect, (i) what language, if any should be included in the ICA with regard to the rates for such elements, and (ii) what language, if any, should be included in the ICA with regard to the terms and conditions of such elements?

13 This Attachment sets forth rates, terms and conditions for unbundled network elements (Network Elements) and combinations of Network Elements (Combinations) that BellSouth offers to Access Point for Access Point's provision of Telecommunications Services in accordance with its obligations under Section 251(c)(3) of the Act.

Issue 9 – What conditions, if any, should be imposed on moving, adding, or changing orders to a CLP's respective embedded base of switching, high-capacity loops, and dedicated transport, and what is the appropriate language to implement such conditions, if any?

Issue 10 – What rates terms and conditions should govern the transition of existing network elements that BellSouth is no longer obligated to provide as Section 251 UNEs to non-Section 251 network elements and other services and (a) what is the proper treatment for such network elements at the end of the transition period,; and (b) what is the appropriate transition period, and what are the appropriate rates, terms and conditions during such transition period, for unbundled high-capacity loops, high capacity transport, and dark fiber transport in and between wire that do

not meet the FCC's non-impairment standards at this time, but that meet such standards in the future?

14 Effective March 11, 2006, and except to the extent expressly provided otherwise in this Attachment, Access Point may not maintain unbundled network elements or combinations of unbundled network elements, that are no longer offered pursuant to this Agreement (collectively "Arrangements"). In the event BellSouth determines that Access Point has in place any Arrangements after the Effective Date of this Agreement, BellSouth will provide Access Point with thirty (30) days written notice to disconnect or convert such Arrangements. If Access Point fails to submit orders to disconnect or convert such Arrangements within such thirty (30) day period, BellSouth will transition such circuits to the equivalent tariffed BellSouth service(s). Those circuits identified and transitioned by BellSouth pursuant to this Section 18 shall be subject to applicable switch-as-is charges.

<u>Issue 13 –</u> What is the scope of commingling allowed under the FCC's rules and orders and what language should be included in Interconnection Agreements to implement commingling (including rates)?

15 Commingling of Services

15.1 Commingling means the connecting, attaching, or otherwise linking of a Network Element, or a Combination, to one or more Telecommunications Services or facilities that Access Point has obtained at wholesale from BellSouth, or the combining of a Network Element or Combination with one or more such wholesale Telecommunications Services or facilities consistent with the NCUC's Order dated March 1, 2006 in Docket No. P-55, Sub 1549. Access Point must comply with all rates, terms or conditions applicable to such wholesale Telecommunications Services or facilities.

15.2 Subject to the limitations set forth elsewhere in this Attachment, BellSouth shall not deny access to a Network Element or a Combination on the grounds that one or more of the elements: (1) is connected to, attached to, linked to, or combined with such a facility or service obtained from BellSouth; or (2) shares part of BellSouth's network with access services or inputs for mobile wireless services and/or interexchange services.

15.3 Unless otherwise agreed to by the Parties, the Network Element portion of a commingled circuit will be billed at the rates set forth in Exhibit A and the remainder of the circuit or service will be billed in accordance with BellSouth's tariffed rates or rates set forth in a separate agreement between the Parties.

15.4 When multiplexing equipment is attached to a commingled circuit, the multiplexing equipment will be billed from the same agreement or tariff as

the higher bandwidth circuit. Central Office Channel Interfaces (COCI) will be billed from the same agreement or tariff as the lower bandwidth circuit.

15.5 Terms and conditions for order cancellation charges and Service Date Advancement Charges will apply in accordance with Attachment 6 and are incorporated herein by this reference. The charges shall be as set forth in Exhibit A.

Issue 14 – Is BellSouth required to provide conversion of special access circuits to UNE pricing, and, if so, at what rates, terms and conditions and during what timeframe should such new requests for such conversions be effectuated?

Issue 15 – What are the appropriate rates, terms and conditions and effective dates, if any, for conversion requests that were pending on the effective date of the TRO?

16. Conversion of Wholesale Services to Network Elements or Network Elements to Wholesale Services.

16.1 Upon request, BellSouth shall convert a wholesale service, or group of wholesale services, to the equivalent Network Element or Combination that is available to Access Point pursuant to this Agreement, or convert a Network Element or Combination that is available to Access Point under this Agreement to an equivalent wholesale service or group of wholesale services offered by BellSouth (collectively "Conversion"). BellSouth shall charge the applicable nonrecurring switch-as-is rates for Conversions to specific Network Elements or Combinations found in Exhibit A. BellSouth shall also charge the same nonrecurring switch-as-is rates when converting from Network Elements or Combinations. Any rate change resulting from the Conversion will be effective as of the next billing cycle following BellSouth's receipt of a complete and accurate Conversion request from the CLEC. A Conversion shall be considered termination for purposes of any volume and/or term commitments and/or grandfathered status between CLEC and BellSouth. Any change from a wholesale service/group of wholesale services to a Network Element/Combination, or from a Network Element/Combination to a wholesale service/group of wholesale services that requires a physical rearrangement will not be considered to be a Conversion for purposes of this Agreement. BellSouth shall not require physical rearrangements if the Conversion can be completed through record changes only. Orders for Conversions will be handled in accordance with the guidelines set forth in the Ordering Guidelines and Processes and CLEC Information Packages as referenced in Section 20.3 below.

16.2 To the extent, Access Point had a Conversion request pending between October 2, 2003 and the effective date of this Amendment, such Conversion shall be deemed converted as of the date of such request.

17 <u>Ordering Guidelines and Processes</u>

17.1 For information regarding Ordering Guidelines and Processes for various Network Elements, Combinations and Other Services, Access Point should refer to the "Guides" section of the BellSouth Interconnection Web site.

17.2 Additional information may also be found in the individual CLEC Information Packages located at the "CLEC UNE Products" on BellSouth's Interconnection Web site.

17.3 The provisioning of Network Elements, Combinations and Other Services to Access Point's Collocation Space will require cross-connections within the central office to connect the Network Element, Combinations or Other Services to the demarcation point associated with Access Point's Collocation Space. These cross-connects are separate components that are not considered a part of the Network Element, Combinations or Other Services and, thus, have a separate charge pursuant to this Agreement.

Issue 18: LINE SPLITTING: What is the appropriate ICA language to implement BellSouth's obligations with regard to line splitting?

18 Line Splitting

18.1 Line splitting shall mean that Access Point purchases a whole loop and provides the splitter to provide voice and data services through an arrangement with a third party CLEC, who is either the provider of data services (Data CLEC) or the provider of voice services (Voice CLEC), to deliver voice and data service to End Users over the same Loop. The Voice CLEC and Data CLEC are different carriers, with Access Point being either the Voice CLEC or Data CLEC.

18.2 <u>Line Splitting – UNE-L.</u> In the event Access Point provides its own switching or obtains switching from a third party, Access Point may engage in line splitting arrangements with another CLEC using a splitter, provided by Access Point, in a Collocation Space at the central office where the loop terminates into a distribution frame or its equivalent.

18.3 <u>Line Splitting – Loop and Port.</u> To the extent Access Point is using a commingled arrangement that consists of an Unbundled Loop purchased pursuant to this Agreement and Local Switching provided by BellSouth pursuant to Section 271, BellSouth will permit Access Point to utilize Line Splitting. BellSouth shall charge the rates previously approved by the North Carolina Utilities Commission as set forth in Exhibit A.

18.4 Access Point shall provide BellSouth with a signed LOA between it and the third party CLEC (Data **C**LEC or Voice CLEC) with which it desires to provision Line Splitting services, where Access Point will not provide voice and data services.

18.5 Provisioning Line Splitting and Splitter Space – Loop and Port

18.6 The Data LEC, Voice CLEC, or a third party may provide the splitter. When Access Point or its authorized agent owns the splitter, Line Splitting requires the following: a non-designed analog Loop from the serving wire center to the NID at the End User's location; a collocation cross-connection connecting the Loop to the collocation space; and a second collocation cross-connection from the collocation space connected to a voice port.

18.7 An unloaded 2-wire copper Loop must serve the End User. The meet point for the Voice CLEC and the Data CLEC is the point of termination on the MDF for the Data CLEC's cable and pairs.

18.8 The foregoing procedures are applicable to migration from a UNE-P arrangement to Line Splitting Service, including a Line splitting service that includes a commingled arrangement of Loop and unbundled local switching pursuant to Section 271.

18.9 Provisioning Line Splitting and Splitter Space – UNE-L

18.9.1 **Access Point** provides the splitter when providing Line Splitting with UNE-L. When Access Point or its authorized agent owns the splitter, Line Splitting requires the following: a loop from NID at the End User's location to the serving wire center and terminating into a distribution frame or its equivalent.

18.10 Maintenance – Line Splitting – Loop and Port and UNE-L

18.10.1 BellSouth will be responsible for repairing voice troubles and the troubles with the physical loop between the NID at the End User's premises and the termination point.

18.10.2 BellSouth must make all necessary network modifications, including providing nondiscriminatory access to operations support systems necessary for pre-ordering, ordering, provisioning, maintenance and repair, and billing for loops used in line splitting arrangements.

18.11 Indemnity

18.11.1 Access Point shall indemnify, defend and hold harmless BellSouth from and against any claims, losses, damages and costs, which arise out of actions related to the other service provider, except to the extent caused by BellSouth's gross negligence or willful misconduct.

Issue 19 – What is the appropriate ICA language, if any, to address call related databases?

19 Call Related Databases and Signaling

19.1 Except for 911 and E911, BellSouth is not required to provide unbundled access to call related databases pursuant to section 251.

19.2 Automatic Location Identification/Data Management System

19.2.1 911 and E911 Databases

19.2.1.1 BellSouth shall provide Access Point with nondiscriminatory access to 911 and E911 databases on an unbundled basis, in accordance with 47 C.F.R. § 51.319 (f).

19.2.1.2 The ALI/DMS database contains End User information (including name, address, telephone information, and sometimes special information from the local service provider or End User) used to determine to which PSAP to route the call. The ALI/DMS database is used to provide enhanced routing flexibility for E911. Access Point will be required to provide the BellSouth 911 database vendor daily service order updates to E911 database in accordance with Section 22.3.1 below.

19.2.2 Technical Requirements

19.2.2.1 BellSouth's 911 database vendor shall provide Access Point the capability of providing updates to the ALI/DMS database through a specified electronic interface. Access Point shall contact BellSouth's 911 database vendor directly to request interface. Access Point shall provide updates directly to BellSouth's 911 database vendor on a daily basis. Updates shall be the responsibility of Access Point and BellSouth shall not be liable for the transactions between Access Point and BellSouth's 911 database vendor.

19.2.2.2 It is Access Point's responsibility to retrieve and confirm statistical data and to correct errors obtained from BellSouth's 911 database vendor on a daily basis. All errors will be assigned a unique error code and the description of the error and the corrective action is described in the CLEC Users Guide for Facility Based Providers that is found on the BellSouth Interconnection Web site.

19.2.2.3 Access Point shall conform to the BellSouth standards as described in the CLEC Users Guide to E911 for Facilities Based Providers that is located on the BellSouth's Interconnection Web site.

19.2.3 Stranded Unlocks are defined as End User records in BellSouth's ALI/DMS database that have not been migrated for over ninety (90) days to Access Point, as a new provider of local service to the End User. Stranded Unlocks are those End User records that have been "unlocked" by the previous local exchange carrier that provided service to the End User and are open for Access Point to assume responsibility for such records.

19.2.3.1 Based upon End User record ownership information available in the NPAC database, BellSouth shall provide a Stranded Unlock annual report to Access Point that reflects all Stranded Unlocks that remain in the ALI/DMS database for over ninety (90) days. Access Point shall review the Stranded Unlock report, identify its End User records and request to either delete such records or migrate the records to Access Point within two (2) months following the date of the Stranded Unlock report provided by BellSouth. Access Point shall reimburse BellSouth for any charges BellSouth's database vendor imposes on BellSouth for the deletion of Access Point's records.

19.2.4 911 PBX Locate Service®. 911 PBX Locate Service is comprised of a database capability and a separate transport component.

19.2.4.1 Description of Product. The transport component provides a dedicated trunk path from a Private Branch Exchange (PBX) switch to the appropriate BellSouth 911 tandem.

19.2.4.1.1 The database capability allows Access Point to offer an E911 service to its PBX end users that identifies to the PSAP the physical location of the Access Point PBX 911 end user station telephone number for the 911 call that is placed by the end user.

19.2.4.1.2 Access Point may order either the database capability or the transport component as desired or Access Point may order both components of the service.

19.2.5 911 PBX Locate Database Capability. Access Point's end user or Access Point's end user's database management agent (DMA) must provide the end user PBX station telephone numbers and corresponding address and location data to BellSouth's 911 database vendor. The data will be loaded and maintained in BellSouth's ALI database.

19.2.5.1 Ordering, provisioning, testing and maintenance shall be provided by Access Point pursuant to the 911 PBX Locate Marketing Service Description (MSD) that is located on the BellSouth Interconnection Web site.

19.2.5.2 Access Point's end user, or Access Point's end user database management agent must provide ongoing updates to BellSouth's 911 database vendor within a commercially reasonable timeframe of all PBX station telephone number adds, moves and deletions. It will be the responsibility of Access Point to ensure that the end user or DMA maintain the data pertaining to each end user's extension managed by the 911 PBX Locate Service product. Access Point should not submit telephone number updates for specific PBX station telephone numbers that are submitted by Access Point's end user, or Access Point's end user DMA under the terms of 911 PBX Locate product.

19.2.5.3 Access Point must provision all PBX station numbers in the same LATA as the E911 tandem.

19.2.5.4 Access Point agrees to release, indemnify, defend and hold harmless BellSouth from any and all loss, claims, demands, suits, or other action, or any liability whatsoever, whether suffered, made, instituted or asserted by Access Point's end user or by any other party or person, for any personal injury to or death of any person or persons, or for any loss, damage or destruction of any property, whether owned by Access Point or others, or for any infringement or invasion of the right of privacy of any person or persons, caused or claimed to have been caused, directly or indirectly, by the installation, operation, failure to operate, maintenance, removal, presence, condition, location or use of PBX Locate Service features or by any services which are or may be furnished by BellSouth in connection therewith, including but not limited to the identification of the telephone number, address or name associated with the telephone used by the party or parties accessing 911 services using 911 PBX Locate Service hereunder, except to the extent caused by BellSouth's gross negligence or wilful misconduct. Access Point is responsible for assuring that its authorized end users comply with the provisions of these terms and that unauthorized persons do not gain access to or use the 911 PBX Locate Service through user names, passwords, or other identifiers assigned to Access Point's end user or DMA pursuant to these terms. Specifically, Access Point's end user or DMA must keep and protect from use by any unauthorized individual identifiers, passwords, and any other security token(s) and devices that are provided for access to this product.

19.2.5.5 Access Point may only use BellSouth PBX Locate Service solely for the purpose of validating and correcting 911 related data for Access Point's end users' telephone numbers for which it has direct management authority.

19.2.5.6 911 PBX Locate Transport Component. The 911 PBX Locate Service transport component requires Access Point to order a CAMA type dedicated trunk from Access Point's end user premise to the appropriate BellSouth 911 tandem pursuant to the following provisions.

19.2.5.7 Except as otherwise set forth below, a minimum of two (2) end user specific, dedicated 911 trunks are required between the Access Point's end user premise and the BellSouth 911 tandem as described in BellSouth's Technical Reference (TR) 73576 and in accordance with the 911 PBX Locate Marketing Service Description located on the BellSouth Interconnection Web site. Access Point is responsible for connectivity between the end user's PBX and Access Point's switch or POP location. Access Point will then order 911 trunks from their switch or POP location to the BellSouth 911 tandem. The dedicated trunks shall be, at a minimum, DS0 level trunks configured as part of a digital interface (delivered over a Access Point purchased DS1 facility that hands off at a DS1 or higher level digital or optical interface). Access Point is responsible for ensuring that the PBX switch is capable of sending the calling station's Direct Inward Dial (DID) telephone number to the BellSouth 911 tandem in a specified Multi-frequency (MF) Address Signaling Protocol. If the PBX switch supports Primary Rate ISDN (PRI) and the calling stations are DID numbers, then the 911call can be transmitted using PRI, and there will be no requirement for the PBX Locate Transport component.

19.2.5.8 Ordering and Provisioning. Access Point will submit an Access Service Request (ASR) to BellSouth to order a minimum of two (2) end user specific 911 trunks from its switch or POP location to the BellSouth 911 tandem.

19.2.5.8.1 Testing and maintenance shall be provided by Access Point pursuant to the 911 PBX Locate Marketing Service description that is located on the BellSouth Interconnection Web site.

19.2.5.9 Rates. Rates for the 911 PBX Locate Service database component are set forth in Exhibit A. Trunks and facilities for 911 PBX Locate transport component may be ordered by Access Point pursuant to the terms and conditions set forth in Attachment 3.

Issue 20 - What is the appropriate language to implement BellSouth's obligation, if any, to offer unbundled access to newly deployed or "greenfield" fiber loops, including fiber loops deployed to the minimum point of entry (MPOE) of a multiple dwelling unit that is predominantly residential and what, if any impact does the ownership of the inside wiring from the MPOE to each end user have one this obligation?

20 Fiber to the Home (FTTH) loops are local loops consisting entirely of fiber optic cable, whether dark or lit, serving an End User's premises or, in the case of predominantly residential multiple dwelling units (MDUs), a fiber optic cable, whether dark or lit, that extends to the MDU minimum point of entry (MPOE). Fiber to the Curb loops are local loops consisting of fiber optic cable connecting to a copper distribution plant that is not more than five hundred (500) feet from the End User's premises or, in the case of predominantly residential MDUs, not more than five hundred (500) feet from the MDU's MPOE. The fiber optic cable in a FTTC loop must connect to a copper distribution plant at a serving area interface from which every other copper distribution subloop also is not more than five hundred (500) feet from the respective End User's premises. BellSouth shall offer CLPs unbundled access to FTTH/FTTC loops serving enterprise customers and predominantly business MDUs.

20.1 In new build (Greenfield) areas, where BellSouth has only deployed FTTH/FTTC facilities, BellSouth is under no obligation to provide such FTTH and FTTC Loops. FTTH facilities include fiber loops deployed to the MPOE of a MDU that is predominantly residential regardless of the ownership of the inside wiring from the MPOE to each End User in the MDU.

20.2 Notwithstanding the above, nothing in this Section shall limit BellSouth's obligation to offer CLECs an unbundled DS1 loop (or loop/transport combination) in any wire center where BellSouth is required to provide unbundled access to DS1 loops and loop/transport combinations

Issue 21: What is the appropriate ICA language to implement BellSouth's obligation to provide unbundled access to hybrid loops?

21 A hybrid loop is a local loop, composed of both fiber optic cable usually in the feeder plant and copper twisted wire or cable usually in the distribution plant. BellSouth shall provide unbundled access to hybrid loops pursuant to the requirements of 47 C.F.R. 51.319(a)(2).

Issue 22: What is the appropriate ICA language to implement BellSouth's obligation to provide RNMs?

Issue 23: What is the appropriate process for establishing a rate, if any, to allow for the cost of a routine network modification that is not already recovered in Commission-approved recurring and nonrecurring rates? What is the appropriate language, if any, to incorporate into the ICAs?

22 Routine Network Modifications

22.1 BellSouth will perform Routine Network Modifications (RNM) in accordance with FCC 47 CFR 51.319 (a)(7) and (e)(4) for Loops and Dedicated Transport provided under this Attachment. If BellSouth

performs such RNM during normal operations and has recovered the costs for performing such modifications through the rates set forth in Exhibit A, then BellSouth will perform such RNM at no additional charge.

22.2 RNM shall be performed within the intervals established for the Network Element and subject to the performance measurements and associated remedies set forth in Attachment 9. If BellSouth has not recovered the costs of such RNM in the rates set forth in Exhibit A, then such request will be handled as a project on an individual case basis. BellSouth will provide a price quote for the request and, upon receipt of payment from Access Point, BellSouth will perform the RNM.

Issue 24: What is the appropriate language, if any, to address access to overbuild deployments of fiber to the home and fiber to the curb facilities?

23 In FTTH/FTTC overbuild situations where BellSouth also has copper Loops, BellSouth may make those copper Loops available to Access Point on an unbundled basis, pursuant to the requirements of 47 C.F.R. § 51.319(a)(3)(iii), BellSouth's retirements of copper loops or copper subloops must comply with the requirements of 47 C.F.R. § 51.319(a)(3)(iv).

Issue 25: What is the appropriate ICA language to implement BellSouth's EEL audit rights, if any, under the TRO?

24 EELs Audit Provisions

24.1 BellSouth may, on an annual basis audit Access Point's records in order to verify compliance with the high capacity EEL eligibility criteria. To invoke its limited right to audit, BellSouth will send a Notice of Audit to Access Point stating its concern that Access Point is not complying with the service eligibility requirements as set forth above and a concise statement of the reasons therefore. Such Notice of Audit will be delivered to Access Point no less than thirty (30) calendar days prior to the date upon which BellSouth seeks to commence an audit. BellSouth is not required to provide documentation, as distinct from a statement of concern, to support its basis for an audit, or seek the concurrence of the requesting carrier before selecting the location of the audit.

24.2 The audit shall be conducted by a third party independent auditor, retained and paid for by BellSouth. BellSouth may select the independent auditor without the prior approval of Access Point or the Commission. Challenges to the independence of the auditor may be filed with the Commission only after the audit has been concluded. The audit must be performed in accordance with the standards established by the American Institute for Certified Public Accountants (AICPA) which will require the auditor to perform an "examination engagement" and issue an opinion regarding Access Point's compliance with the high capacity EEL

eligibility criteria. AICPA standards and other AICPA requirements will be used to determine the independence of an auditor. The independent auditor's report will conclude whether Access Point complied in all material respects with the applicable service eligibility criteria. Consistent with standard auditing practices, such audits require compliance testing designed by the independent auditor.

24.3 To the extent the independent auditor's report concludes that Access Point failed to comply with the service eligibility criteria, Access Point must true-up any difference in payments, convert all noncompliant circuits to the appropriate service, and make the correct payments on a going-forward basis.

24.4 To the extent the independent auditor's report concludes that Access Point failed to comply in all material respects with the service eligibility criteria, Access Point shall reimburse BellSouth for the cost of the independent auditor. To the extent the independent auditor's report concludes that Access Point did comply in all material respects with the service eligibility criteria, BellSouth will reimburse Access Point for its reasonable and demonstrable costs associated with the audit. Access Point will maintain appropriate documentation to support its certifications. The Parties shall provide such reimbursement within thirty (30) calendar days of receipt of a statement of such costs.

24 Access Point shall not obtain a Network Element for the exclusive provision of mobile wireless services or interexchange services.

25 Facilities that do not terminate at a demarcation point at an End User premises, including, by way of example, but not limited to, facilities that terminate to another carrier's switch or premises, a cell site, Mobile Switching Center or base station, do not constitute local Loops under Section 251, except to the extent that Access Point may require Loops to such locations for the purpose of providing telecommunications services to its personnel at those locations.

26 Subloop Elements

26.1 Where facilities permit, BellSouth shall offer access to its Unbundled Subloop (USL) elements as specified herein.

26.2 <u>Unbundled Subloop Distribution (USLD)</u>

26.2.1 The USLD facility is a dedicated transmission facility that BellSouth provides from an End User's point of demarcation to a BellSouth cross-connect device. The BellSouth cross-connect device may be located within a remote terminal (RT) or a stand-alone cross-box in the field or in the equipment room of a building. The USLD media is a copper twisted pair that can be provisioned as a 2-wire or 4-wire facility. BellSouth will

make available the following subloop distribution offerings where facilities exist:

USLD – Voice Grade (USLD-VG)
Unbundled Copper Subloop (UCSL)
USLD – Intrabuilding Network Cable (USLD-INC (aka riser cable))

26.2.2 USLD-VG is a copper subloop facility from the cross-box in the field up to and including the point of demarcation at the End User's premises and may have load coils.

26.2.3 UCSL is a copper facility eighteen thousand (18,000) feet or less in length provided from the cross-box in the field up to and including the End User's point of demarcation. If available, this facility will not have any intervening equipment such as load coils between the End User and the cross-box.

26.2.4 If Access Point requests a UCSL and it is not available, Access Point may request the copper Subloop facility be modified pursuant to the ULM process to remove load coils and/or excessive bridged taps. If load coils and/or excessive bridged taps are removed, the facility will be classified as a UCSL.

26.2.5 USLD-INC is the distribution facility owned or controlled by BellSouth inside a building or between buildings on the same property that is not separated by a public street or road. USLD-INC includes the facility from the cross-connect device in the building equipment room up to and including the point of demarcation at the End User's premises.

26.2.6 Upon request for USLD-INC from Access Point, BellSouth will install a cross-connect panel in the building equipment room for the purpose of accessing USLD-INC pairs from a building equipment room. The cross-connect panel will function as a single point of interconnection (SPOI) for USLD-INC and will be accessible by multiple carriers as space permits. BellSouth will place cross-connect blocks in twenty five (25) pair increments for Access Point's use on this cross-connect panel. Access Point will be responsible for connecting its facilities to the twenty five (25) pair cross-connect block(s).

26.2.7 For access to Voice Grade USLD and UCSL, Access Point shall install a cable to the BellSouth cross-box pursuant to the terms and conditions for physical collocation for remote sites set forth in Attachment 4. This cable would be connected by a BellSouth technician within the BellSouth cross-box during the set-up process. Access Point's cable pairs can then be connected to BellSouth's USL within the BellSouth cross-box by the BellSouth technician.

26.2.8 Through the SI process, BellSouth will determine whether access to USLs at the location requested by Access Point is technically feasible and whether sufficient capacity exists in the cross-box. If existing capacity is sufficient to meet Access Point's request, then BellSouth will perform the site set-up as described in the CLEC Information Package, located at BellSouth's Interconnection Web site.

26.2.9 The site set-up must be completed before Access Point can order Subloop pairs. For the site set-up in a BellSouth cross-connect box in the field, BellSouth will perform the necessary work to splice Access Point's cable into the cross-connect box. For the site set-up inside a building equipment room, BellSouth will perform the necessary work to install the cross-connect panel and the connecting block(s) that will be used to provide access to the requested USLs.

26.2.10 Once the site set-up is complete, Access Point will request Subloop pairs through submission of a LSR form to the LCSC. OC is required with USL pair provisioning when Access Point requests reuse of an existing facility, and the OC charge shall be billed in addition to the USL pair rate. For expedite requests by Access Point for Subloop pairs, expedite charges will apply for intervals less than five (5) days.

26.2.11 USLs will be provided in accordance with BellSouth's TR73600 Unbundled Local Loop Technical Specifications.

26.3 <u>Unbundled Network Terminating Wire (UNTW)</u>

26.3.1 UNTW is unshielded twisted copper wiring that is used to extend circuits from an intra-building network cable terminal or from a building entrance terminal to an individual End User's point of demarcation. It is the final portion of the Loop that in multi-subscriber configurations represents the point at which the network branches out to serve individual subscribers.

26.3.2 This element will be provided in MDUs and/or Multi-Tenants Units (MTUs) where either Party owns wiring all the way to the End User's premises. Neither Party will provide this element in locations where the property owner provides its own wiring to the End User's premises, where a third party owns the wiring to the End User's premises.

26.3.3 Requirements

26.3.3.1 On a multi-unit premises, upon request of the other Party (Requesting Party), the Party owning the network terminating wire (Provisioning Party) will provide access to UNTW pairs on an Access Terminal that is suitable for use by multiple carriers at each Garden Terminal or Wiring Closet.

26.3.3.2 The Provisioning Party shall not be required to install new or additional NTW beyond existing NTW to provision the services of the Requesting Party.

26.3.3.3 In existing MDUs and/or MTUs in which BellSouth does not own or control wiring (INC/NTW) to the End Users premises, and Access Point does own or control such wiring, Access Point will install UNTW Access Terminals for BellSouth under the same terms and conditions as BellSouth provides UNTW Access Terminals to Access Point.

26.3.3.4 In situations in which BellSouth activates a UNTW pair, BellSouth will compensate Access Point for each pair activated commensurate to the price specified in Access Point's Agreement.

26.3.3.5 Upon receipt of the UNTW SI requesting access to the Provisioning Party's UNTW pairs at a multi-unit premises, representatives of both Parties will participate in a meeting at the site of the requested access. The purpose of the site visit will include discussion of the procedures for installation and location of the Access Terminals. By request of the Requesting Party, an Access Terminal will be installed either adjacent to each of the Provisioning Party's Garden Terminal or inside each Wiring Closet. The Requesting Party will deliver and connect its central office facilities to the UNTW pairs within the Access Terminal. The Requesting Party may access any available pair on an Access Terminal. A pair is available when a pair is not being utilized to provide service or where the End User has requested a change in its local service provider to the Requesting Party. Prior to connecting the Requesting Party's service on a pair previously used by the Provisioning Party, the Requesting Party is responsible for ensuring the End User is no longer using the Provisioning Party's service or another CLEC's service before accessing UNTW pairs.

26.3.3.6 Access Terminal installation intervals will be established on an individual case basis.

26.3.3.7 The Requesting Party is responsible for obtaining the property owner's permission for the Provisioning Party to install an Access Terminal(s) on behalf of the Requesting Party. The submission of the SI by the Requesting Party will serve as certification by the Requesting Party that such permission has been obtained. If the property owner objects to Access Terminal installations that are in progress or within thirty (30) days after completion and demands removal of Access Terminals, the

Requesting Party will be responsible for costs associated with removing Access Terminals and restoring the property to its original state prior to Access Terminals being installed.

26.3.3.8 The Requesting Party shall indemnify and hold harmless the Provisioning Party against any claims of any kind that may arise out of the Requesting Party's failure to obtain the property owner's permission. The Requesting Party will be billed for nonrecurring and recurring charges for accessing UNTW pairs at the time the Requesting Party activates the pair(s). The Requesting Party will notify the Provisioning Party within five (5) business days of activating UNTW pairs using the LSR form.

26.3.3.9 If a trouble exists on a UNTW pair, the Requesting Party may use an alternate spare pair that serves that End User if a spare pair is available. In such cases, the Requesting Party will re-terminate its existing jumper from the defective pair to the spare pair. Alternatively, the Requesting Party will isolate and report troubles in the manner specified by the Provisioning Party. The Requesting Party must tag the UNTW pair that requires repair. If the Provisioning Party dispatches a technician on a reported trouble call and no UNTW trouble is found, the Provisioning Party will charge Requesting Party for time spent on the dispatch and testing the UNTW pair(s).

26.3.3.10 If the Requesting Party initiates the Access Terminal installation and the Requesting Party has not activated at least ten percent (10%) of the capacity of the Access Terminal installed pursuant to the Requesting Party's request for an Access Terminal within six (6) months of installation of the Access Terminal, the Provisioning Party will bill the Requesting Party a nonrecurring charge equal to the actual cost of provisioning the Access Terminal.

26.3.3.11 If the Provisioning Party determines that the Requesting Party is using the UNTW pairs without reporting the activation of the pairs, the Requesting Party will be billed for the use of that pair back to the date the End User began receiving service from the Requesting Party at that location. Upon request, the Requesting Party will provide copies of its billing record to substantiate such date. If the Requesting Party fails to provide such records, then the Provisioning Party will bill the Requesting Party back to the date of the Access Terminal installation.

Attachment 2

Network Elements and Other Services

TABLE OF CONTENTS

1 Introduction.....3

2 Loops.....6

3 Line Splitting.....21

4 EEL Audits……...22

5 Dedicated Transport and Dark Fiber Transport 23

6 Automatic Location Identification/Data Management System 32

ACCESS TO NETWORK ELEMENTS AND OTHER SERVICES

1 Introduction

1.1 This Attachment sets forth rates, terms and conditions for unbundled network elements (Network Elements) and combinations of Network Elements (Combinations) that BellSouth offers to Access Point for Access Point's provision of Telecommunications Services in accordance with its obligations under Section 251(c)(3) of the Act. Additionally, this Attachment sets forth the rates, terms and conditions for other facilities and services BellSouth makes available to Access Point (Other Services). Additionally, the provision of a particular Network Element or Other Service may require Access Point to purchase other Network Elements or services. In the event of a conflict between this Attachment and any other section or provision of this Agreement, the provisions of this Attachment shall control.

1.2 Access Point shall not obtain a Network Element for the exclusive provision of mobile wireless services or interexchange services.

1.3 Conversion of Wholesale Services to Network Elements or Network Elements to Wholesale Services. Upon request, BellSouth shall convert a wholesale service, or group of wholesale services, to the equivalent Network Element or Combination that is available to Access Point pursuant to Section 251 of the Act and under this Agreement or convert a Network Element or Combination that is available to Access Point pursuant to Section 251 of the Act and under this Agreement to an equivalent wholesale service or group of wholesale services offered by BellSouth (collectively "Conversion"). BellSouth shall charge the applicable nonrecurring switch-as-is rates for Conversions to specific Network Elements or Combinations found in Exhibit B. BellSouth shall also charge the same nonrecurring switch-as-is rates when converting from Network Elements or Combinations. Any rate change resulting from the Conversion will be effective as of the next billing cycle following BellSouth's receipt of a complete and accurate Conversion request from Access Point. A Conversion shall be considered termination for purposes of any volume and/or term commitments and/or grandfathered status between Access Point and BellSouth. Any change from a wholesale service/group of wholesale services to a Network Element/Combination, or from a Network Element/Combination to a wholesale service/group of wholesale services, that requires a physical rearrangement will not be considered to be a Conversion for purposes of this Agreement. BellSouth will not require physical rearrangements if the Conversion can be completed through record changes only. Orders for Conversions will be handled in accordance with the guidelines set forth in the Ordering Guidelines and Processes and CLEC Information Packages as referenced in Sections 1.8.1 and 1.8.2 below.

1.4 Except to the extent expressly provided otherwise in this Attachment, Access Point may not maintain unbundled network elements or combinations of unbundled network elements, that are no longer offered pursuant to this Agreement (collectively "Arrangements"). In the event BellSouth determines that Access Point has in place any Arrangements after the Effective Date of this Agreement, BellSouth will provide Access Point with thirty (30) days written notice to disconnect or convert such Arrangements. If Access Point fails to submit orders to disconnect or convert such Arrangements within such thirty (30) day period, BellSouth will transition such circuits to the equivalent tariffed BellSouth service(s). Those circuits identified and transitioned by BellSouth pursuant to this Section 1.4 shall be subject to all applicable disconnect charges as set forth in this Agreement and the full nonrecurring charges for installation of the equivalent tariffed BellSouth service as set forth in BellSouth's tariffs. The applicable recurring tariff charge shall apply to each circuit as of the Effective Date of this Agreement.

1.5 Prior to submitting an order pursuant to this Agreement for high capacity (DS1 or above) Dedicated Transport or high capacity Loops, Access Point shall undertake a reasonably diligent inquiry to determine whether Access Point is entitled to unbundled access to such Network Elements in accordance with the terms of this Agreement. By submitting any such order, Access Point self-certifies that to the best of Access Point's knowledge, the high capacity Dedicated Transport or high capacity Loop requested is available as a Network Element pursuant to this Agreement. Upon receiving such order, BellSouth shall process the request in reliance upon Access Point's self-certification. To the extent BellSouth believes that such request does not comply with the terms of this Agreement, BellSouth shall seek dispute resolution in accordance with the General Terms and Conditions of this Agreement. In the event such dispute is resolved in BellSouth's favor, BellSouth shall bill Access Point the difference between the rates for such circuits pursuant to this Agreement and the applicable nonrecurring and recurring charges for the equivalent tariffed service from the date of installation to the date the circuit is transitioned to the equivalent tariffed service. Within thirty (30) days following a decision finding in BellSouth's favor, Access Point shall submit a spreadsheet identifying those non-compliant circuits to be transitioned to tariffed services or disconnected.

1.5.1 ***In the event that (1) BellSouth designates a wire center as non-impaired, (2) CLEC converts existing UNEs to other services or orders new services as services other than UNEs, (3) CLEC otherwise would have been entitled to UNEs in such wire center at the time alternative services were provisioned, and (4) BellSouth acknowledges or a state or federal regulatory body with authority determines that, at the time BellSouth designated such wire center as non-impaired, such wire center did not meet the FCC's non-impairment criteria,***

then upon request of CLEC, BellSouth shall transition to UNEs any alternative services in such wire center that were established after such wire center was designated as non-impaired. In such instances, BellSouth shall refund CLEC the difference between the rate paid by CLEC for such services and the applicable UNE rate, including but not limited to any charges associated with the unnecessary conversion from UNE to other wholesale services.

1.6 BellSouth will perform Routine Network Modifications (RNM) in accordance with FCC 47 C.F.R. § 51.319 (a)(7) and (e)(4) for Loops and Dedicated Transport provided under this Attachment. If BellSouth has anticipated such RNM and performs them during normal operations and has recovered the costs for performing such modifications through the rates set forth in Exhibit A, then BellSouth shall perform such RNM at no additional charge. RNM shall be performed within the intervals established for the Network Element and subject to the performance measurements and associated remedies set forth in Attachment 9 of this Agreement to the extent such RNM were anticipated in the setting of such intervals. If BellSouth has not anticipated a requested network modification as being a RNM and has not recovered the costs of such RNM in the rates set forth in Exhibit A, then such request will be handled as a project on an individual case basis. BellSouth will provide a price quote for the request and, upon receipt of payment from Access Point, BellSouth shall perform the RNM.

1.7 <u>Commingling of Services</u>

1.7.1 Commingling means the connecting, attaching, or otherwise linking of a Network Element, or a Combination, to one or more Telecommunications Services or facilities that Access Point has obtained at wholesale from BellSouth, or the combining of a Network Element or Combination with one or more such wholesale Telecommunications Services or facilities. Access Point must comply with all rates, terms or conditions applicable to such wholesale Telecommunications Services or facilities.

1.7.2 Subject to the limitations set forth elsewhere in this Attachment, BellSouth shall not deny access to a Network Element or a Combination on the grounds that one or more of the elements: (1) is connected to, attached to, linked to, or combined with such a facility or service obtained from BellSouth; or (2) shares part of BellSouth's network with access services or inputs for mobile wireless services and/or interexchange services.

1.7.3 Unless otherwise agreed to by the Parties, the Network Element portion of a commingled circuit will be billed at the rates set forth in Exhibit B and the remainder of the circuit or service will be billed in accordance with BellSouth's tariffed rates or rates set forth in a separate agreement between the Parties.

1.7.4 When multiplexing equipment is attached to a commingled circuit, the multiplexing equipment will be billed from the same agreement or tariff as the higher bandwidth circuit. Central Office Channel Interfaces (COCI) will be billed from the same agreement or tariff as the lower bandwidth circuit.

1.7.5 Notwithstanding any other provision of this Agreement, BellSouth shall not be obligated to commingle or combine Network Elements or Combinations with any service, network element or other offering that it is obligated to make available only pursuant to Section 271 of the Act.

1.7.6 Terms and conditions for order cancellation charges and Service Date Advancement Charges will apply in accordance with Attachment 6. The charges shall be as set forth in Exhibit A.

1.8 Ordering Guidelines and Processes

1.8.1 For information regarding Ordering Guidelines and Processes for various Network Elements, Combinations and Other Services, Access Point should refer to the "Guides" section of the BellSouth Interconnection Web site.

1.8.2 Additional information may also be found in the individual CLEC Information Packages located at the "CLEC UNE Products" on BellSouth's Interconnection Web site.

2 Loops

2.1 General. The local loop Network Element is defined as a transmission facility that BellSouth provides pursuant to this Attachment between a distribution frame (or its equivalent) in BellSouth's central office and the loop demarcation point at an End User premises (Loop). Facilities that do not terminate at a demarcation point at an End User premises, including, by way of example, but not limited to, facilities that terminate to another carrier's switch or premises, a cell site, Mobile Switching Center or base station, do not constitute local Loops ***under Section 251, except to the extent that CLEC may require Loops to such locations for the purpose of providing telecommunications services to its personnel at those locations.*** The Loop Network Element includes all features, functions, and capabilities of the transmission facilities, including the network interface device, and attached electronics (except those used for the provision of advanced services, such as Digital Subscriber Line Access Multiplexers (DSLAMs)), optronics and intermediate devices (including repeaters and load coils) used to establish the transmission path to the End User's premises, including inside wire owned or controlled by BellSouth. Access Point shall purchase the entire bandwidth of the Loop and, except as required herein or as otherwise agreed to by the Parties, BellSouth shall not subdivide the frequency of the Loop.

2.1.1 The Loop does not include any packet switched features, functions or capabilities.

2.1.2 Fiber to the Home (FTTH) loops are local loops consisting entirely of fiber optic cable, whether dark or lit, serving an End User's premises or, in the case of predominantly residential multiple dwelling units (MDUs), a fiber optic cable, whether dark or lit, that extends to the MDU minimum point of entry (MPOE). Fiber to the Curb (FTTC) loops are local loops consisting of fiber optic cable connecting to a copper distribution plant that is not more than five hundred (500) feet from the End User's premises or, in the case of predominantly residential MDUs, not more than five hundred (500) feet from the MDU's MPOE. The fiber optic cable in a FTTC loop must connect to a copper distribution plant at a serving area interface from which every other copper distribution subloop also is not more than five hundred (500) feet from the respective End User's premises.

2.1.2.1 In new build (Greenfield) areas, where BellSouth has only deployed FTTH/FTTC facilities, BellSouth is under no obligation to provide Loops. FTTH facilities include fiber loops deployed to the MPOE of a MDU that is predominantly residential regardless of the ownership of the inside wiring from the MPOE to each End User in the MDU. Notwithstanding the foregoing, in such Greenfield areas that are served from an impaired wire center, BellSouth shall make available UNE DS1 Loops as described in this Attachment.

2.1.2.2 In FTTH/FTTC overbuild situations where BellSouth also has copper Loops, BellSouth will make those copper Loops available to Access Point on an unbundled basis, until such time as BellSouth chooses to retire those copper Loops using the FCC's network disclosure requirements. In these cases, BellSouth will offer a sixty-four (64) kilobits per ***second (kbps) voice*** grade channel over its FTTH/FTTC facilities.

2.1.2.3 Furthermore, in FTTH/FTTC overbuild areas where BellSouth has not yet retired copper facilities, BellSouth is not obligated to ensure that such copper Loops in that area are capable of transmitting signals prior to receiving a request for access to such Loops by Access Point. If a request is received by BellSouth for a copper Loop, and the copper facilities have not yet been retired, BellSouth will restore the copper Loop to serviceable condition if technically feasible. In these instances of Loop orders in an FTTH/FTTC overbuild area, BellSouth's standard Loop provisioning interval will not apply, and the order will be handled on a project basis by which the Parties will negotiate the applicable provisioning interval.

2.1.3 A hybrid Loop is a local Loop, composed of both fiber optic cable, usually in the feeder plant, and copper twisted wire or cable, usually in the distribution plant. BellSouth shall provide Access Point with nondiscriminatory access to the time division multiplexing features, functions and capabilities of such hybrid Loop, on an unbundled basis to establish a complete transmission path between BellSouth's

central office and an End User's premises. Notwithstanding the foregoing, in an impaired wire center, BellSouth shall make available hybrid Loops as described in this Attachment.

2.1.4 For purposes of this Section 2, a Business Line is defined in 47 C.F.R. § 51.5

2.1.5 Notwithstanding anything to the contrary in this Agreement, and except as set forth in Section 2.1.9 below, BellSouth shall make available DS1 and DS3 Loops as described in this Section 2except as described below:

2.1.5.1 DS1 Loops at any location within the service area of a wire center containing 60,000 or more Business Lines and four (4) or more fiber-based collocators.

2.1.5.2 DS3 Loops at any location within the service area of a wire center containing 38,000 or more Business Lines and four (4) or more fiber-based collocators.

2.1.6 A list of wire centers meeting the criteria set forth in Sections 2.1.5.1 and 2.1.5.2 above as of March 10, 2005 (Initial Wire Center List) as ordered by the Public Service Commission of South Carolina in Docket No. 2004-316-C (Initial Wire Center List), is attached to BellSouth's Carrier Notification Letter SN91086058, dated March 20, 2006, which is available on BellSouth's Interconnection Services Web site.

2.1.7 Once a wire center exceeds both of the thresholds set forth in Section 2.1.5.1 above, no future DS1 Loop unbundling will be required in that wire center.

2.1.8 Once a wire center exceeds both of the thresholds set forth in Section 2.1.5.2 above, no future DS3 Loop unbundling will be required in that wire center.

2.1.9 <u>Modifications and Updates to the Wire Center List and Subsequent Transition Periods</u>

2.1.9.1 In the event BellSouth identifies additional wire centers that meet the criteria set forth in Section 2.1.5 above, but that were not included in the Initial Wire Center List, BellSouth shall include such additional wire centers in a carrier notification letter (CNL). Each such list of additional wire centers shall be considered a "Subsequent Wire Center List".

2.1.9.2 Effective ten (10) business days after the date of a BellSouth CNL providing a Subsequent Wire Center List, BellSouth shall not be required to unbundle DS1 and/or DS3 Loops, as applicable, in such additional wire center(s), except pursuant to the self-certification process as set forth in Section 1.5 of this Attachment.

2.1.9.3 For purposes of Section 2.1.9 above, BellSouth shall make available DS1 and DS3 Loops that were in service for Access Point in a wire center on the Subsequent

Wire Center List as of the tenth (10th) business day after the date of BellSouth's CNL identifying the Subsequent Wire Center List (Subsequent Embedded Base) until ninety (90) days after the tenth (10th) business day from the date of BellSouth's CNL identifying the Subsequent Wire Center List (Subsequent Transition Period).

2.1.9.4 Subsequent disconnects or loss of End Users shall be removed from the Subsequent Embedded Base.

2.1.9.5 The rates set forth in Exhibit A plus fifteen percent (15%) shall apply to the Subsequent Embedded Base during the Subsequent Transition Period.

2.1.9.6 No later than forty (40) days from BellSouth's CNL identifying the Subsequent Wire Center List, Access Point shall submit a spreadsheet(s) identifying the Subsequent Embedded Base of circuits to be disconnected or converted to other BellSouth services. The Parties shall negotiate a project schedule for the Conversion of the Subsequent Embedded Base.

2.1.9.7 If Access Point fails to submit the spreadsheet(s) specified in Section 2.1.9.6 above for all of its Subsequent Embedded Base within forty (40) days after the date of BellSouth's CNL identifying the Subsequent Wire Center List, BellSouth will identify Access Point's remaining Subsequent Embedded Base, if any, and will transition such circuits to the equivalent tariffed BellSouth service(s). Those circuits identified and transitioned by BellSouth shall be subject to the applicable disconnect charges as set forth in this Agreement and the full nonrecurring charges for installation of the equivalent tariffed BellSouth service as set forth in BellSouth's tariffs.

2.1.9.8 For Subsequent Embedded Base circuits converted pursuant to Section 2.1.9.6 above or transitioned pursuant to Section 2.1.9.7 above, the applicable recurring tariff charges shall apply as of the earlier of the date each circuit is converted or transitioned, as applicable, or the first day after the end of the Subsequent Transition Period.

2.2 <u>Unbundled Digital Loops</u>

2.2.1 BellSouth will offer UDLs. UDLs are service specific, will be designed, will be provisioned with test points (where appropriate), and will come standard with OC and a DLR. The various UDLs are intended to support a specific digital transmission scheme or service.

2.2.2 BellSouth shall make available the following UDLs, subject to restrictions set forth herein:

2.2.2.1 2-wire Unbundled ISDN Digital Loop;

2.2.2.2 2-wire Unbundled ADSL Compatible Loop;

2.2.2.3 2-wire Unbundled HDSL Compatible Loop;

2.2.2.4 4-wire Unbundled HDSL Compatible Loop;

2.2.2.5 4-wire Unbundled DS1 Digital Loop;

2.2.2.6 4-wire Unbundled Digital Loop/DS0 – 64 kbps, 56 kbps and below;

2.2.2.7 DS3 Loop; or

2.2.2.8 STS-1 Loop.

2.2.3 2-wire Unbundled ISDN Digital Loops. These will be provisioned according to industry standards for 2-Wire Basic Rate ISDN services and will come standard with a test point, OC, and a DLR. Access Point will be responsible for providing BellSouth with a Service Profile Identifier (SPID) associated with a particular ISDN-capable Loop and End User. With the SPID, BellSouth will be able to adequately test the circuit and ensure that it properly supports ISDN service.

2.2.4 2-wire ADSL-Compatible Loop. This is a designed Loop that is provisioned according to Revised Resistance Design (RRD) criteria and may be up to 18,000 feet long and may have up to 6,000 feet of bridged tap (inclusive of Loop length). The Loop is a 2-wire circuit and will come standard with a test point, OC, and a DLR.

2.2.5 2-wire or 4-wire HDSL-Compatible Loop. This is a designed Loop that meets Carrier Serving Area (CSA) specifications, may be up to 12,000 feet long and may have up to 2,500 feet of bridged tap (inclusive of Loop length). It may be a 2-wire or 4-wire circuit and will come standard with a test point, OC, and a DLR.

2.2.6 4-wire Unbundled DS1 Digital Loop.

2.2.6.1 This is a designed 4-wire Loop that is provisioned according to industry standards for DS1 or Primary Rate ISDN services and will come standard with a test point, OC, and a DLR. A DS1 Loop may be provisioned over a variety of loop transmission technologies including copper, HDSL-based technology or fiber optic transport systems. It will include a 4-wire DS1 Network Interface at the End User's location. For purposes of this Agreement, including the transition of DS1 and DS3 Loops described in Section 2.1.4 above, DS1 Loops include 2-wire and 4-wire copper Loops capable of providing high-bit rate digital subscriber line services, such as 2-wire and 4-wire HDSL Compatible Loops.

2.2.6.2 BellSouth shall not provide more than ten (10) unbundled DS1 Loops to Access Point at any single building in which DS1 Loops are available as unbundled Loops.

2.2.7 4-wire Unbundled Digital/DS0 Loop. These are designed 4-wire Loops that may be configured as sixty-four (64)kbps, fifty-six (56)kbps, nineteen (19)kbps, and other sub-rate speeds associated with digital data services and will come standard with a test point, OC, and a DLR.

2.2.8 DS3 Loop. DS3 Loop is a two-point digital transmission path which provides for simultaneous two-way transmission of serial, bipolar, return-to-zero isochronous digital electrical signals at a transmission rate of forty-four point seven thirty-six (44.736) megabits per second (Mbps) that is dedicated to the use of the ordering CLEC in its provisioning of local exchange and associated exchange access services. It may provide transport for twenty-eight (28) DS1 channels, each of which provides the digital equivalent of twenty-four (24) analog voice grade channels. The interface to unbundled dedicated DS3 transport is a metallic-based electrical interface.

2.2.9 STS-1 Loop. STS-1 Loop is a high-capacity digital transmission path with SONET VT1.5 mapping that is dedicated for the use of the ordering customer for the purpose of provisioning local exchange and associated exchange access services. It is a two-point digital transmission path which provides for simultaneous two-way transmission of serial bipolar return-to-zero synchronous digital electrical signals at a transmission rate of fifty-one point eighty-four (51.84) Mbps. It may provide transport for twenty-eight (28) DS1 channels, each of which provides the digital equivalent of twenty-four (24) analog voice grade channels. The interface to unbundled dedicated STS-1 transport is a metallic-based electrical interface.

2.2.10 Both DS3 Loop and STS-1 Loop require a SI in order to ascertain availability.

2.2.11 DS3 services come with a test point and a DLR. Mileage is airline miles, rounded up and a minimum of one (1) mile applies. BellSouth's TR73501 LightGate®Service Interface and Performance Specifications, Issue D, June 1995 applies to DS3 services.

2.2.12 Access Point may obtain a maximum of a single Unbundled DS3 Loop to any single building in which DS3 Loops are available as Unbundled Loops.

2.2.13 Fiber based Collocator

2.2.13.1 For purposes of this Amendment a "Fiber-Based Collocator" is, as defined in 47 C.F.R. § 51.5, any carrier, unaffiliated with BellSouth, that maintains a collocation arrangement in a BellSouth wire center, with active electrical power supply, and

operates a fiber-optic cable or comparable transmission facility that (1) terminates at a collocation arrangement within the wire center; (2) leaves the BellSouth wire center premises; and (3) is owned by a party other than BellSouth or any affiliate of BellSouth.

2.2.13.2 For purposes of this definition: (i) carriers that have entered into merger and/or other consolidation agreements, or otherwise announced their intention to enter into the same, will be treated as affiliates and therefore as one collocator; provided however, in the case one of the parties to such merger or consolidation arrangement is BellSouth, then the other party's collocation arrangement shall not be counted as a Fiber-Based Collocator, (ii) a Comparable transmission Facility means, at a minimum, the provision of transmission capacity equivalent to fiber-optic cable with a minimum point-to-point symmetrical data capacity exceeding 12 DS3s; (iii) the network of a Fiber-Based Collocator may only be counted once in making a determination of the number of Fiber-Based Collocators, notwithstanding that such single Fiber-Based Collocator leases its facilities to other collocators in a single wire center; provided, however, that a collocating carrier's dark fiber leased from an unaffiliated carrier may only be counted as a separate fiber-optic cable from the unaffiliated carrier's fiber if the collocating carrier obtains this dark fiber on an IRU basis.

2.3 <u>Unbundled Loop Modifications (Line Conditioning)</u>

2.3.1 Line Conditioning is defined as routine network modification that BellSouth regularly undertakes to provide xDSL services to its own customers. This may include the removal of any device, from a copper Loop or copper Subloop that may diminish the capability of the Loop or Subloop to deliver high-speed switched wireline telecommunications capability, including xDSL service. Such devices include, load coils, excessive bridged taps, low pass filters, and range extenders. Excessive bridged taps are bridged taps that serves no network design purpose and that are beyond the limits set according to industry standards and/or the BellSouth's TR73600 Unbundled Local Loop Technical Specification.

2.3.2 BellSouth will remove load coils only on copper Loops and Subloops that are less than eighteen thousand (18,000) feet in length.

2.3.3 For any copper loop being ordered by Access Point which has over six thousand (6,000) feet of combined bridged tap will be modified, upon request from Access Point, so that the loop will have a maximum of six thousand (6,000) feet of bridged tap. This modification will be performed at no additional charge to Access Point. Loop conditioning orders that require the removal of bridged tap that serves no network design purpose on a copper Loop that will result in a combined total of bridged tap between two thousand five hundred (2,500) and six thousand (6,000) feet will be performed at the rates set forth in Exhibit A.

2.3.4 Access Point may request removal of any unnecessary and non-excessive bridged tap (bridged tap between zero (0) and two thousand five hundred (2,500) feet which serves no network design purpose), at rates pursuant to BellSouth's SC Process as mutually agreed to by the Parties.

2.3.5 Rates for ULM are as set forth in Exhibit Exhibit A.

2.3.6 BellSouth will not modify a Loop in such a way that it no longer meets the technical parameters of the original Loop type (e.g., voice grade, ADSL, etc.) being ordered.

2.3.7 If Access Point requests ULM on a reserved facility for a new Loop order, BellSouth may perform a pair change and provision a different Loop facility in lieu of the reserved facility with ULM if feasible. The Loop provisioned will meet or exceed specifications of the requested Loop facility as modified. Access Point will not be charged for ULM if a different Loop is provisioned. For Loops that require a DLR or its equivalent, BellSouth will provide LMU detail of the Loop provisioned.

2.3.8 Access Point shall request Loop make up information pursuant to this Attachment prior to submitting a service inquiry and/or a LSR for the Loop type that Access Point desires BellSouth to condition.

2.3.9 When requesting ULM for a Loop that BellSouth has previously provisioned for Access Point, Access Point will submit a SI to BellSouth. If a spare Loop facility that meets the Loop modification specifications requested by Access Point is available at the location for which the ULM was requested, Access Point will have the option to change the Loop facility to the qualifying spare facility rather than to provide ULM. In the event that BellSouth changes the Loop facility in lieu of providing ULM, Access Point will not be charged for ULM but will only be charged the service order charges for submitting an order.

2.4 <u>Subloop Elements.</u>

2.4.1 Where facilities permit, BellSouth shall offer access to its Unbundled Subloop (USL) elements as specified herein.

2.4.2 <u>Unbundled Subloop Distribution (USLD)</u>

2.4.2.1 The USLD facility is a dedicated transmission facility that BellSouth provides from an End User's point of demarcation to a BellSouth cross-connect device. The BellSouth cross-connect device may be located within a remote terminal (RT) or a stand-alone cross-box in the field or in the equipment room of a building. The USLD media is a copper twisted pair that can be provisioned as a 2-wire or 4-wire

facility. BellSouth will make available the following subloop distribution offerings where facilities exist:

USLD – Voice Grade (USLD-VG)
Unbundled Copper Subloop (UCSL)
USLD – Intrabuilding Network Cable (USLD-INC (aka riser cable))

2.4.2.2 USLD-VG is a copper subloop facility from the cross-box in the field up to and including the point of demarcation at the End User's premises and may have load coils.

2.4.2.3 UCSL is a copper facility eighteen thousand (18,000) feet or less in length provided from the cross-box in the field up to and including the End User's point of demarcation. If available, this facility will not have any intervening equipment such as load coils between the End User and the cross-box.

2.4.2.3.1 If Access Point requests a UCSL and it is not available, Access Point may request the copper Subloop facility be modified pursuant to the ULM process to remove load coils and/or excessive bridged taps. If load coils and/or excessive bridged taps are removed, the facility will be classified as a UCSL.

2.4.2.4 USLD-INC is the distribution facility owned or controlled by BellSouth inside a building or between buildings on the same property that is not separated by a public street or road. USLD-INC includes the facility from the cross-connect device in the building equipment room up to and including the point of demarcation at the End User's premises.

2.4.2.4.1 Upon request for USLD-INC from Access Point, BellSouth will install a cross-connect panel in the building equipment room for the purpose of accessing USLD-INC pairs from a building equipment room. The cross-connect panel will function as a single point of interconnection (SPOI) for USLD-INC and will be accessible by multiple carriers as space permits. BellSouth will place cross-connect blocks in twenty five (25) pair increments for Access Point's use on this cross-connect panel. Access Point will be responsible for connecting its facilities to the twenty five (25) pair cross-connect block(s).

2.4.2.5 For access to Voice Grade USLD and UCSL, Access Point shall install a cable to the BellSouth cross-box pursuant to the terms and conditions for physical collocation for remote sites set forth in Attachment 4. This cable would be connected by a BellSouth technician within the BellSouth cross-box during the set-up process. Access Point's cable pairs can then be connected to BellSouth's USL within the BellSouth cross-box by the BellSouth technician.

2.4.2.6 Through the SI process, BellSouth will determine whether access to USLs at the location requested by Access Point is technically feasible and whether sufficient capacity exists in the cross-box. If existing capacity is sufficient to meet Access Point's request, then BellSouth will perform the site set-up as described in the CLEC Information Package, located at BellSouth's Interconnection Web site.

2.4.2.7 The site set-up must be completed before Access Point can order Subloop pairs. For the site set-up in a BellSouth cross-connect box in the field, BellSouth will perform the necessary work to splice Access Point's cable into the cross-connect box. For the site set-up inside a building equipment room, BellSouth will perform the necessary work to install the cross-connect panel and the connecting block(s) that will be used to provide access to the requested USLs.

2.4.2.8 Once the site set-up is complete, Access Point will request Subloop pairs through submission of a LSR form to the LCSC. OC is required with USL pair provisioning when Access Point requests reuse of an existing facility, and the OC charge shall be billed in addition to the USL pair rate. For expedite requests by Access Point for Subloop pairs, expedite charges will apply for intervals less than five (5) days.

2.4.2.9 USLs will be provided in accordance with BellSouth's TR73600 Unbundled Local Loop Technical Specifications.

2.4.3 Unbundled Network Terminating Wire (UNTW)

2.4.3.1 UNTW is unshielded twisted copper wiring that is used to extend circuits from an intra-building network cable terminal or from a building entrance terminal to an individual End User's point of demarcation. It is the final portion of the Loop that in multi-subscriber configurations represents the point at which the network branches out to serve individual subscribers.

2.4.3.2 This element will be provided in MDUs and/or Multi-Tenants Units (MTUs) where either Party owns wiring all the way to the End User's premises. Neither Party will provide this element in locations where the property owner provides its own wiring to the End User's premises, where a third party owns the wiring to the End User's premises.

2.4.3.3 <u>Requirements</u>

2.4.3.3.1 On a multi-unit premises, upon request of the other Party (Requesting Party), the Party owning the network terminating wire (Provisioning Party) will provide access to UNTW pairs on an Access Terminal that is suitable for use by multiple carriers at each Garden Terminal or Wiring Closet.

2.4.3.3.2 The Provisioning Party shall not be required to install new or additional NTW beyond existing NTW to provision the services of the Requesting Party.

2.4.3.3.3 In existing MDUs and/or MTUs in which BellSouth does not own or control wiring (INC/NTW) to the End Users premises, and Access Point does own or control such wiring, Access Point will install UNTW Access Terminals for BellSouth under the same terms and conditions as BellSouth provides UNTW Access Terminals to Access Point.

2.4.3.3.4 In situations in which BellSouth activates a UNTW pair, BellSouth will compensate Access Point for each pair activated commensurate to the price specified in Access Point's Agreement.

2.4.3.3.5 Upon receipt of the UNTW SI requesting access to the Provisioning Party's UNTW pairs at a multi-unit premises, representatives of both Parties will participate in a meeting at the site of the requested access. The purpose of the site visit will include discussion of the procedures for installation and location of the Access Terminals. By request of the Requesting Party, an Access Terminal will be installed either adjacent to each of the Provisioning Party's Garden Terminal or inside each Wiring Closet. The Requesting Party will deliver and connect its central office facilities to the UNTW pairs within the Access Terminal. The Requesting Party may access any available pair on an Access Terminal. A pair is available when a pair is not being utilized to provide service or where the End User has requested a change in its local service provider to the Requesting Party. Prior to connecting the Requesting Party's service on a pair previously used by the Provisioning Party, the Requesting Party is responsible for ensuring the End User is no longer using the Provisioning Party's service or another CLEC's service before accessing UNTW pairs.

2.4.3.3.6 Access Terminal installation intervals will be established on an individual case basis.

2.4.3.3.7 The Requesting Party is responsible for obtaining the property owner's permission for the Provisioning Party to install an Access Terminal(s) on behalf of the Requesting Party. The submission of the SI by the Requesting Party will serve as certification by the Requesting Party that such permission has been obtained. If the property owner objects to Access Terminal installations that are in progress or within thirty (30) days after completion and demands removal of Access Terminals, the Requesting Party will be responsible for costs associated with removing Access Terminals and restoring the property to its original state prior to Access Terminals being installed.

2.4.3.3.8 The Requesting Party shall indemnify and hold harmless the Provisioning Party against any claims of any kind that may arise out of the Requesting Party's failure

to obtain the property owner's permission. The Requesting Party will be billed for nonrecurring and recurring charges for accessing UNTW pairs at the time the Requesting Party activates the pair(s). The Requesting Party will notify the Provisioning Party within five (5) business days of activating UNTW pairs using the LSR form.

2.4.3.3.9 If a trouble exists on a UNTW pair, the Requesting Party may use an alternate spare pair that serves that End User if a spare pair is available. In such cases, the Requesting Party will re-terminate its existing jumper from the defective pair to the spare pair. Alternatively, the Requesting Party will isolate and report troubles in the manner specified by the Provisioning Party. The Requesting Party must tag the UNTW pair that requires repair. If the Provisioning Party dispatches a technician on a reported trouble call and no UNTW trouble is found, the Provisioning Party will charge Requesting Party for time spent on the dispatch and testing the UNTW pair(s).

2.4.3.3.10 If the Requesting Party initiates the Access Terminal installation and the Requesting Party has not activated at least ten percent (10%) of the capacity of the Access Terminal installed pursuant to the Requesting Party's request for an Access Terminal within six (6) months of installation of the Access Terminal, the Provisioning Party will bill the Requesting Party a nonrecurring charge equal to the actual cost of provisioning the Access Terminal.

2.4.3.3.11 If the Provisioning Party determines that the Requesting Party is using the UNTW pairs without reporting the activation of the pairs, the Requesting Party will be billed for the use of that pair back to the date the End User began receiving service from the Requesting Party at that location. Upon request, the Requesting Party will provide copies of its billing record to substantiate such date. If the Requesting Party fails to provide such records, then the Provisioning Party will bill the Requesting Party back to the date of the Access Terminal installation.

3 Line Splitting

3.1 Line splitting shall mean that a provider of data services (a Data LEC) and a provider of voice services (a Voice CLEC) to deliver voice and data service to End Users over the same Loop. The Voice CLEC and Data LEC may be the same or different carriers.

3.2 Line Splitting – UNE-L. In the event Access Point provides its own switching or obtains switching from a third party, Access Point may engage in line splitting arrangements with another CLEC using a splitter, provided by Access Point, in a Collocation Space at the central office where the loop terminates into a distribution frame or its equivalent.

3.3 Provisioning Line Splitting and Splitter Space – UNE-L

3.3.1 The Voice CLEC provides the splitter when providing Line Splitting with UNE-L. When Access Point owns the splitter, Line Splitting requires the following: a loop from NID at the End User's location to the serving wire center and terminating into a distribution frame or its equivalent.

3.4 CLEC Provided Splitter – Line Splitting –UNE-L

3.4.1 To order High Frequency Spectrum on a particular Loop, Access Point must have a DSLAM collocated in the central office that serves the End User of such Loop.

3.4.2 Access Point may purchase, install and maintain central office POTS splitters in its collocation arrangements. Access Point may use such splitters for access to its customers and to provide digital line subscriber services to its customers using the High Frequency Spectrum. Existing Collocation rules and procedures and the terms and conditions relating to Collocation set forth in Attachment 4-Central Office shall apply.

3.4.3 Any splitters installed by Access Point in its collocation arrangement shall comply with ANSI T1.413, Annex E, or any future ANSI splitter Standards. Access Point may install any splitters that BellSouth deploys or permits to be deployed for itself or any BellSouth affiliate.

3.5 Maintenance – Line Splitting – UNE-L

3.5.1 BellSouth will be responsible for repairing voice troubles and the troubles with the physical loop between the NID at the End User's premises and the termination point.

3.5.2 Access Point shall indemnify, defend and hold harmless BellSouth from and against any claims, losses, actions, causes of action, suits, demands, damages, injury, and costs including reasonable attorney fees, which arise out of actions related to the other service provider, except to the extent caused by BellSouth's gross negligence or willful misconduct.

4 EEL Audits

4.1 BellSouth may, on an annual basis, audit Access Point's records in order to verify compliance with the qualifying service eligibility criteria. The audit shall be conducted by a third party independent auditor, and the audit must be performed in accordance with the standards established by the American Institute for Certified Public Accountants (AICPA). To the extent the independent auditor's report concludes that Access Point failed to comply with the service eligibility criteria, Access Point must true-up any difference in payments, convert all noncompliant

circuits to the appropriate service, and make the correct payments on a going-forward basis. In the event the auditor's report concludes that Access Point did not comply in any material respect with the service eligibility criteria, Access Point shall reimburse BellSouth for the cost of the independent auditor. To the extent the auditor's report concludes that Access Point did comply in all material respects with the service eligibility criteria, BellSouth will reimburse Access Point for its reasonable and demonstrable costs associated with the audit. Access Point will maintain appropriate documentation to support its certifications.

4.2 In the event Access Point converts special access services to UNEs, Access Point shall be subject to the termination liability provisions in the applicable special access tariffs, if any.

5 Dedicated Transport and Dark Fiber Transport

5.1 Dedicated Transport. Dedicated Transport is defined as BellSouth's transmission facilities between wire centers or switches owned by BellSouth, or between wire centers or switches owned by BellSouth and switches owned by Access Point, including but not limited to DS1, DS3 and OCn level services, as well as dark fiber, dedicated to Access Point. BellSouth shall not be required to provide access to OCn level Dedicated Transport under any circumstances pursuant to this Agreement.

5.2 For purposes of this Section 5, a Business Line is as defined in 47 C.F.R. § 51.5.

5.3 Notwithstanding anything to the contrary in this Agreement, BellSouth shall make available Dedicated Transport as described in this Section 5 except as described below:

5.3.1 DS1 Dedicated Transport where both wire centers at the end points of the route contain 38,000 or more Business Lines or four (4) or more fiber-based collocators.

5.3.2 DS3 Dedicated Transport where both wire centers at the end points of the route contain 24,000 or more Business Lines or three (3) or more fiber-based collocators.

5.4 Once a wire center exceeds either of the thresholds set forth in Section 5.3.1 above, no future DS1 Dedicated Transport unbundling will be required in that wire center.

5.5 Once a wire center exceeds either of the thresholds set forth in Section 5.3.2 above, no future DS3 Dedicated Transport will be required in that wire center.

5.6 Modifications and Updates to the Wire Center List and Subsequent Transition Periods

5.6.1 In the event BellSouth identifies additional wire centers that meet the criteria set forth in Sections 5.3.1 or 5.3.2 above, but that were not included in the Initial Wire Center List, BellSouth shall include such additional wire centers in CNL. Each such list of additional wire centers shall be considered a Subsequent Wire Center List.

5.6.2 Effective ten (10) business days after the date of a BellSouth CNL providing a Subsequent Wire Center List, BellSouth shall not be required to provide DS1 and DS3 Dedicated Transport, as applicable, in such additional wire center(s), except pursuant to the self-certification process as set forth in Section 1.5 above.

5.6.3 For purposes of Section 5.4.1 above, BellSouth shall make available DS1 and DS3 Dedicated Transport that were in service for Access Point in a wire center on the Subsequent Wire Center List as of the tenth (10th) business day after the date of BellSouth's CNL identifying the Subsequent Wire Center List (Subsequent Embedded Base) until ninety (90) days after the tenth (10th) business day from the date of BellSouth's CNL identifying the Subsequent Wire Center List (Subsequent Transition Period).

5.6.4 Subsequent disconnects or loss of End Users shall be removed from the Subsequent Embedded Base.

5.6.5 The rates set forth in Exhibit A plus fifteen percent (15%) shall apply to the Subsequent Embedded Base during the Subsequent Transition Period.

5.6.6 No later than forty (40) days from BellSouth's CNL identifying the Subsequent Wire Center List Access Point shall submit a spreadsheet(s) identifying the Subsequent Embedded Base of circuits to be disconnected or converted to other BellSouth services. The Parties shall negotiate a project schedule for the Conversion of the Subsequent Embedded Base.

5.6.7 If Access Point fails to submit the spreadsheet(s) specified in Section 5.6.6 above for all of its Subsequent Embedded Base within forty (40) days after the date of BellSouth's CNL identifying the Subsequent Wire Center List, BellSouth will identify Access Point's remaining Subsequent Embedded Base, if any, and will transition such circuits to the equivalent tariffed BellSouth service(s). Those circuits identified and transitioned by BellSouth shall be subject to the applicable disconnect charges as set forth in this Agreement and the full nonrecurring charges for installation of the equivalent tariffed BellSouth service as set forth in BellSouth's tariffs.

5.6.8 For Subsequent Embedded Base circuits converted pursuant to Section 5.6.6 above or transitioned pursuant to Section 5.6.7 above, the applicable recurring tariff charges shall apply as of the earlier of the date each circuit is converted or

transitioned, as applicable, or the first day after the end of the Subsequent Transition Period.

5.7 BellSouth shall:

5.7.1 Provide Access Point exclusive use of Dedicated Transport to a particular customer or carrier;

5.7.2 Provide all technically feasible features, functions, and capabilities of Dedicated Transport as outlined within the technical requirements of this section;

5.7.3 Permit, to the extent technically feasible, Access Point to connect Dedicated Transport to equipment designated by Access Point, including but not limited to, Access Point's collocated facilities; and

5.7.4 Permit, to the extent technically feasible, Access Point to obtain the functionality provided by BellSouth's digital cross-connect systems.

5.8 BellSouth shall offer Dedicated Transport:

5.8.1 As capacity on a shared facility; and

5.8.2 As a circuit (i.e., DS0, DS1, DS3, STS-1) dedicated to Access Point.

5.9 Dedicated Transport may be provided over facilities such as optical fiber, copper twisted pair, and coaxial cable, and shall include transmission equipment such as line terminating equipment, amplifiers, and regenerators.

5.10 ***Access Point may obtain a maximum of twelve (12) unbundled DS3 Dedicated Transport circuits on each route where DS3 Dedicated Transport is available as a Network Element, and a maximum of ten (10) unbundled DS1 Dedicated Transport circuits on each Route where there is no 251(c)(3) unbundling obligation for DS3 Dedicated Transport but for which impairment exists for DS1 Dedicated Transport.*** A route is defined as a transmission path between one of BellSouth's wire centers or switches and another of BellSouth's wire centers or switches. A route between two (2) points may pass through one or more intermediate wire centers or switches. Transmission paths between identical end points are the same "route", irrespective of whether they pass through the same intermediate wire centers or switches, if any.

5.11 Technical Requirements

5.11.1 BellSouth shall offer DS0 equivalent interface transmission rates for DS0 or voice grade Dedicated Transport. For DS1 or DS3 circuits, Dedicated Transport shall at a minimum meet the performance, availability, jitter, and delay requirements

specified for Customer Interface to Central Office (CI to CO) connections in the applicable industry standards.

5.11.2 BellSouth shall offer the following interface transmission rates for Dedicated Transport:

5.11.2.1 DS0 Equivalent;

5.11.2.2 DS1;

5.11.2.3 DS3;

5.11.2.4 STS-1; and

5.11.2.5 SDH (Synchronous Digital Hierarchy) Standard interface rates are in accordance with International Telecommunications Union (ITU) Recommendation G.707 and Plesiochronous Digital Hierarchy (PDH) rates per ITU Recommendation G.704.

5.11.3 BellSouth shall design Dedicated Transport according to its network infrastructure. Access Point shall specify the termination points for Dedicated Transport.

5.11.4 At a minimum, Dedicated Transport shall meet each of the requirements set forth in the applicable industry technical references and BellSouth Technical References;

5.11.4.1 Telcordia TR-TSY-000191 Alarm Indication Signals Requirements and Objectives, Issue 1, May 1986.

5.11.4.2 BellSouth's TR73501 LightGate®Service Interface and Performance Specifications, Issue D, June 1995.

5.11.4.3 BellSouth's TR73525 MegaLink®Service, MegaLink Channel Service and MegaLink Plus Service Interface and Performance Specifications, Issue C, May 1996.

5.12 Dark Fiber Transport. Dark Fiber Transport is defined as Dedicated Transport that consists of unactivated optical interoffice transmission facilities without attached signal regeneration, multiplexing, aggregation or other electronics.

5.12.1 For purposes of this Section 5.12, a Business Line is as defined in 47 C.F.R. § 51.5.

5.12.2 Notwithstanding anything to the contrary in this Agreement, BellSouth shall make available Dark Fiber Transport except as described below:

5.12.2.1 Dark Fiber Transport where both wire centers at the end points of the route contain twenty-four thousand (24,000) or more Business Lines or three (3) or more fiber-based collocators.

5.12.3 A list of wire centers meeting the criteria set forth in Section 5.12.2.1 above as of March 10, 2005, (Initial List) as ordered by the Public Service Commission of South Carolina in Docket No. 2004-316-C (Initial Wire Center List), is attached to BellSouth's Carrier Notification Letter SN91086058, dated March 20, 2006, which is available on BellSouth's Interconnection Services Web site.

5.12.4 Once a wire center exceeds the threshold set forth in Section 5.12.2.1 above, no future Dark Fiber Transport unbundling will be required in that wire center.

5.12.5 <u>Modifications and Updates to the Wire Center List and Subsequent Transition Periods</u>

5.12.5.1 In the event BellSouth identifies additional wire centers that meet the criteria set forth in Section 5.12.2.1 above, but that were not included in the Initial Wire Center List, BellSouth shall include such additional wire centers in a CNL. Each such list of additional wire centers shall be considered a "Subsequent Wire Center List".

5.12.5.2 Effective ten (10) business days after the date of a BellSouth CNL providing a Subsequent Wire Center List, BellSouth shall not be required to provide unbundled access to Dark Fiber Transport, as applicable, in such additional wire center(s), except pursuant to the self-certification process as set forth in Section 1.5 above.

5.12.5.3 For purposes of Section 5.12.5, BellSouth shall make available Dark Fiber Transport that were in service for Access Point in a wire center on the Subsequent Wire Center List as of the tenth (10th) business day after the date of BellSouth's CNL identifying the Subsequent Wire Center List (Subsequent Embedded Base) until ninety (90) days after the tenth (10th) business day from the date of BellSouth's CNL identifying the Subsequent Wire Center List (Subsequent Transition Period).

5.12.5.4 Subsequent disconnects or loss of End Users shall be removed from the Subsequent Embedded Base.

5.12.5.5 The rates set forth in Exhibit A plus fifteen percent (15%) shall apply to the Subsequent Embedded Base during the Subsequent Transition Period.

5.12.5.6 No later than forty (40) days from BellSouth's CNL identifying the Subsequent Wire Center List Access Point shall submit a spreadsheet(s) identifying the

Subsequent Embedded Base of circuits to be disconnected or converted to other BellSouth services. The Parties shall negotiate a project schedule for the Conversion of the Subsequent Embedded Base.

5.12.5.6.1 If Access Point fails to submit the spreadsheet(s) specified in Section 5.12.5.6 above for all of its Subsequent Embedded Base within forty (40) days after the date of BellSouth's CNL identifying the Subsequent Wire Center List, BellSouth will identify Access Point's remaining Subsequent Embedded Base, if any, and will transition such circuits to the equivalent tariffed BellSouth service(s). Those circuits identified and transitioned by BellSouth shall be subject to the applicable disconnect charges as set forth in this Agreement and the full nonrecurring charges for installation of the equivalent tariffed BellSouth service as set forth in BellSouth's tariffs.

5.12.5.6.2 For Subsequent Embedded Base circuits converted pursuant to Section 5.12.5.6.1 above or transitioned pursuant to Section 5.12.5.6.1.1 above, the applicable recurring tariff charges shall apply as of the earlier of the date each circuit is converted or transitioned, as applicable, or the first day after the end of the Subsequent Transition Period.

6 Automatic Location Identification/Data Management System

6.1 <u>911 and E911 Databases</u>

6.1.1 BellSouth shall provide Access Point with nondiscriminatory access to 911 and E911 databases on an unbundled basis, in accordance with 47 C.F.R. § 51.319 (f).

6.1.2 The ALI/DMS database contains End User information (including name, address, telephone information, and sometimes special information from the local service provider or End User) used to determine to which PSAP to route the call. The ALI/DMS database is used to provide enhanced routing flexibility for E911. Access Point will be required to provide the BellSouth 911 database vendor daily service order updates to E911 database in accordance with Section 6.2.1 below.

6.2 <u>Technical Requirements</u>

6.2.1 BellSouth's 911 database vendor shall provide Access Point the capability of providing updates to the ALI/DMS database through a specified electronic interface. Access Point shall contact BellSouth's 911 database vendor directly to request interface. Access Point shall provide updates directly to BellSouth's 911 database vendor on a daily basis. Updates shall be the responsibility of Access Point and BellSouth shall not be liable for the transactions between Access Point and BellSouth's 911 database vendor.

6.2.2 It is Access Point's responsibility to retrieve and confirm statistical data and to correct errors obtained from BellSouth's 911 database vendor on a daily basis. All errors will be assigned a unique error code and the description of the error and the corrective action is described in the CLEC Users Guide for Facility Based Providers that is found on the BellSouth Interconnection Web site.

6.2.3 Access Point shall conform to the BellSouth standards as described in the CLEC Users Guide to E911 for Facilities Based Providers that is located on the BellSouth's Interconnection Web site.

6.2.4 Stranded Unlocks are defined as End User records in BellSouth's ALI/DMS database that have not been migrated for over ninety (90) days to Access Point, as a new provider of local service to the End User. Stranded Unlocks are those End User records that have been "unlocked" by the previous local exchange carrier that provided service to the End User and are open for Access Point to assume responsibility for such records.

6.2.5 Based upon End User record ownership information available in the NPAC database, BellSouth shall provide a Stranded Unlock annual report to Access Point that reflects all Stranded Unlocks that remain in the ALI/DMS database for over ninety (90) days. Access Point shall review the Stranded Unlock report, identify its End User records and request to either delete such records or migrate the records to Access Point within two (2) months following the date of the Stranded Unlock report provided by BellSouth. Access Point shall reimburse BellSouth for any charges BellSouth's database vendor imposes on BellSouth for the deletion of Access Point's records.

1. **Loops**

1.1 4-wire Unbundled DS1 Digital Loop

This is a designed 4-wire Loop that is provisioned according to industry standards for DS1 or Primary Rate ISDN services and will come standard with a test point, OC, and a DLR. A DS1 Loop may be provisioned over a variety of loop transmission technologies including copper, HDSL-based technology or fiber optic transport systems. It will include a 4-wire DS1 Network Interface at the End User's location. For purposes of this Agreement, DS1 Loops include 2-wire and 4-wire copper Loops capable of providing high-bit digital subscriber line services, such as 2-wire and 4-wire HDSL Compatible Loops.

1.2 2-wire or 4-wire HDSL-Compatible Loop

This is a designed Loop that meets Carrier Serving Area (CSA) specifications, may be up to 12,000 feet long and may have up to 2,500 feet of bridged tap (inclusive of Loop length). It may be a 2-wire or 4-wire circuit and will come standard with a test point, OC, and a DLR.

1.3 DS3 Loop.

DS3 Loop is a two-point digital transmission path which provides for simultaneous two-way transmission of serial, bipolar, return-to-zero isochronous digital electrical signals at a transmission rate of forty-four point seven thirty-six (44.736) megabits per second (Mbps) that is dedicated to the use of the ordering CLEC in its provisioning of local exchange and associated exchange access services. It may provide transport for twenty-eight (28) DS1 channels, each of which provides the digital equivalent of twenty-four (24) analog voice grade channels. The interface to unbundled dedicated DS3 transport is a metallic-based electrical interface.

1.4 **Requirements for DS1 and DS3 Loops**

1.4.1 BellSouth shall not provide more than ten (10) unbundled DS1 Loops to Access Point at any single building in which DS1 Loops are available as unbundled loops. Access Point may obtain a maximum of a single Unbundled DS3 loop to any single building in which DS3 Loops are available as Unbundled Loops.

1.4.2 For purposes of this Section 1, a Business Line is defined in 47 C.F.R. § 51.5.

1.4.3 Notwithstanding anything to the contrary in this Agreement, and except as set forth in Section 9 below, BellSouth shall make available DS1 and DS3 Loops except as described below:

1.4.3.1 DS1 Loops at any location within the service area of a wire center containing 60,000 or more Business Lines and four (4) or more fiber-based collocators.

1.4.3.2 DS3 Loops at any location within the service area of a wire center containing 38,000 or more Business Lines and four (4) or more fiber-based collocators.

1.4.4 A list of wire centers meeting the criteria set forth in Sections 1.4.3.1 and 1.4.3.2 above as ordered by the Georgia Public Service Commission in Docket No. 19341-U (Initial Wire Center List) is attached to BellSouth's Carrier Notification Letter SN91086068, dated March 30, 2006, which is available on BellSouth's Interconnection Services Web site.

1.4.5 Once a wire center meets or exceeds both of the thresholds set forth in Section 1.4.3.1 above, no future DS1 Loop unbundling will be required in that wire center.

1.4.6 Once a wire center meets or exceeds both of the thresholds set forth in Section 1.4.3.2 above, no future DS3 Loop unbundling will be required in that wire center.

2. Dedicated Transport and Dark Fiber Transport

2.1 **Dedicated Transport.** Dedicated Transport is defined as BellSouth's transmission facilities between wire centers or switches owned by BellSouth, or between wire centers or switches owned by BellSouth and switches owned by Access Point, including but not limited to DS1, DS3 and OCn level services, as well as dark fiber, dedicated to Access Point. BellSouth shall not be required to provide access to OCn level Dedicated Transport under any circumstances pursuant to this Agreement.

2.2 **Requirements for DS1 and DS3 Dedicated Transport**

2.2.1 Access Point may obtain a maximum of twelve (12) unbundled DS3 Dedicated Transport circuits on each route where DS3 Dedicated Transport is available as a Network Element, and a maximum of ten (10) unbundled DS1 Dedicated Transport circuits on each Route where there is no 251(c)(3) unbundling obligation for DS3 Dedicated Transport but for which impairment exists for DS1 Dedicated Transport.

2.2.2 For purposes of this Section 2.2, a Business Line is as defined in 47 C.F.R. § 51.5.

2.2.3 Notwithstanding anything to the contrary in this Agreement, BellSouth shall make available Dedicated Transport as described in this Section 2.2 except as described below:

2.2.3.1 DS1 Dedicated Transport where both wire centers at the end points of the route contain 38,000 or more Business Lines or four (4) or more fiber-based collocators.

2.2.3.2 DS3 Dedicated Transport where both wire centers at the end points of the route contain 24,000 or more Business Lines or three (3) or more fiber-based collocators.

2.2.3.3 A list of wire centers meeting the criteria set forth in Sections 2.2.3.1 or 2.2.3.2 above as ordered by the Georgia Public Service Commission in Docket No. 19341-U (Initial Wire Center List), is attached to BellSouth's Carrier Notification Letter SN91086068, dated March 30, 2006, which is available on BellSouth's Interconnection Services Web site.

2.2.4 Once a wire center meets or exceeds either of the thresholds set forth in this Section 2.2.3.1 above, no future DS1 Dedicated Transport unbundling will be required in that wire center.

2.2.5 Once a wire center meets or exceeds either of the thresholds set forth in Section 2.2.3.2 above, no future DS3 Dedicated Transport will be required in that wire center**.**

3. **Dark Fiber Transport.** Dark Fiber Transport is defined as Dedicated Transport that consists of unactivated optical interoffice transmission facilities without attached signal regeneration, multiplexing, aggregation or other electronics.

3.1 **Requirements for Dark Fiber Transport**

3.1.1 For purposes of this Section 3.1, a Business Line is as defined in 47 C.F.R. § 51.5.

3.1.2 Notwithstanding anything to the contrary in this Agreement, BellSouth shall make available Dark Fiber Transport as described in this Section 3.1 except as described below:

3.1.2.1 Dark Fiber Transport where both wire centers at the end points of the route contain twenty-four thousand (24,000) or more Business Lines or three (3) or more fiber-based collocators.

3.1.3 A list of wire centers meeting the criteria set forth in Section 3.1.2.1 above as ordered by the Georgia Public Service Commission in Docket No. 19341-U, ("Initial List") is attached to BellSouth's Carrier Notification Letter SN91086068, dated March 30, 2006, which is available on BellSouth's Interconnection Services Web site.

3.1.4 Once a wire center exceeds either of the thresholds set forth in Section 3.1.2.1 above, no future Dark Fiber Transport unbundling will be required in that wire center.

4. Prior to submitting an order pursuant to this Agreement for high capacity (DS1 or above) Dedicated Transport or high capacity Loops, Access Point shall undertake a reasonably diligent inquiry to determine whether Access Point is entitled to unbundled access to such Network Elements in accordance with the terms of this Agreement. By submitting any such order, Access Point self-certifies that to the best of Access Point's knowledge, the high capacity Dedicated Transport or high capacity Loop requested is available as a Network Element pursuant to this Attachment. Upon receiving such order, BellSouth shall process the request in reliance upon Access Point's self-certification. To the extent BellSouth believes that such request does not comply with the terms of this Attachment, BellSouth shall seek dispute resolution in accordance with the General Terms and Conditions of this Agreement. If BellSouth prevails in such dispute resolution proceeding, Access Point shall be liable to BellSouth for the difference between the rate for the equivalent BellSouth alternative arrangement and the self certified UNE, plus interest, on such rate differential.

4.1 In the event that (1) BellSouth designates a wire center as non-impaired, (2) Access Point converts existing UNEs to other services or orders new services as services other than UNEs, (3) Access Point otherwise would have been entitled to UNEs in such wire center at the time alternative services provisioned, and (4) BellSouth acknowledges or a state or federal agency regulatory body with authority determines that, at the time BellSouth designated such wire center as non-impaired, such wire center did not meet the FCC's non-impairment criteria, then upon request of Access Point, BellSouth shall transition to UNEs any alternative services in such wire center that were established after such wire center was designated as non-impaired. In such instances, BellSouth shall refund Access Point the difference between the rate paid by Access Point for such services and the applicable UNE rate, including but not limited to any charges associated with the unnecessary conversion from UNE to other wholesale services.

5. A Business Line is defined in 47 CFR § 51.5.

6. A Fiber-Based Collocator is defined in 47 CFR § 51.5.

7. A Building is defined as a permanent physical structure including, but not limited to, a structure in which people reside, or conduct business or work on a daily basis and through which there is one centralized point of entry in the structure through which all telecommunications services must transit. As an example only, a high rise office building with a general telecommunications equipment room through which all telecommunications services to that building's tenants must pass would be a single "building" for purposes of this Attachment 2. Two or more

physical areas served by individual points of entry through which telecommunications services must transit will be considered separate buildings. For instance, a strip mall with individual businesses obtaining telecommunications services from different access points on the building(s) will be considered individual buildings, even though they might share common walls.

8. A route is defined as a transmission path between one of BellSouth's wire centers or switches and another of BellSouth's wire centers or switches. A route between two (2) points may pass through one or more intermediate wire centers or switches. Transmission paths between identical end points are the same "route", irrespective of whether they pass through the same intermediate wire centers or switches, if any.

9. <u>Modifications and Updates to the Wire Center List and Subsequent Transition Periods for DS1 and/or DS3 Loops</u>

9.1 In the event BellSouth identifies additional wire centers that meet the criteria set forth in Section 1.4.3 above, but that were not included in the Initial Wire Center List, BellSouth shall provide notice of such additional wire centers in a Carrier Notification Letter (CNL) sent to the point of contact in this Agreement, or in the absence of such point of contact, BellSouth shall post the CNL on BellSouth's Web site. Each such list of additional wire centers shall be considered a "Subsequent Wire Center List."

9.2 Effective ten (10) business days after the date of BellSouth's notice providing a Subsequent Wire Center List, BellSouth shall not be required to unbundle DS1 and/or DS3 Loops, as applicable, in such additional wire center(s), except pursuant to the self-certification process as set forth in Section 4 above.

9.3 For purposes of this Section 9, BellSouth shall make available DS1 and DS3 Loops that were in service for Access Point in a wire center on the Subsequent Wire Center List as of the tenth (10th) business day after the date of BellSouth's CNL identifying the Subsequent Wire Center List (Subsequent Embedded Base) until one hundred and ten (110) days after the tenth (10th) business day from the date of BellSouth's CNL identifying the Subsequent Wire Center List (Subsequent Transition Period).

9.4 Subsequent disconnects or loss of End Users shall be removed from the Subsequent Embedded Base.

9.5 The applicable rate for the Subsequent Embedded Base during the Subsequent Transition Period shall be 115% of the rate for such Loops set forth in the Parties' Amendment to the Agreement to implement the

Georgia Public Service Commission's Letter Order dated March 2, 2006 in Docket No.14361-U.

9.6 No later than forty (40) days from BellSouth's CNL identifying the Subsequent Wire Center List, Access Point shall submit a spreadsheet(s) identifying the Subsequent Embedded Base of circuits to be disconnected or converted to other BellSouth services. In the case of disconnection, the applicable disconnect charges set forth in this Agreement shall apply.

9.7 If Access Point fails to submit the spreadsheet(s) specified in Section 9.6 above for all of its Subsequent Embedded Base within forty (40) days after the date of BellSouth's CNL identifying the Subsequent Wire Center List BellSouth will identify Access Point's remaining Subsequent Embedded Base, if any, and will transition such circuits to BellSouth's 271 equivalent service set forth in Section 25 below. Those circuits identified and transitioned by BellSouth pursuant to this Section 9.7 shall be subject to 115% of the switch-as-is rate set forth in the Parties' Amendment to the Agreement to implement the Georgia Public Service Commission's Letter Order dated March 2, 2006 in Docket No.14361-U.

9.8 The applicable recurring 271 rate set forth in Exhibit B shall apply to the Subsequent Embedded Base as of the 110th day after the tenth business day from the date of BellSouth's CNL identifying the Subsequent Embedded Base.

10. <u>Modifications and Updates to the Wire Center List and Subsequent Transition Periods for DS1 and/or DS3 Transport</u>

10.1 In the event BellSouth identifies additional wire centers that meet the criteria set forth in Sections 2.2.4 or 2.2.5 above, but that were not included in the Initial Wire Center List, BellSouth shall provide notice of such additional wire centers in a Carrier Notification Letter (CNL) sent to the point of contact in this Agreement, or in the absence of such point of contact, BellSouth shall post the CNL on BellSouth's Web site. Each such list of additional wire centers shall be considered a "Subsequent Wire Center List."

10.2 Effective ten (10) business days after the date of BellSouth's notice providing a Subsequent Wire Center List, BellSouth shall not be required to provide DS1 and DS3 Dedicated Transport, as applicable, in such additional wire center(s), except pursuant to the self-certification process as set forth in Section 4 above.

10.3 For purposes of this Section 10, BellSouth shall make available DS1 and DS3 Dedicated Transport that were in service for Access Point in a wire center on the Subsequent Wire Center List as of the tenth (10th) business day after the date of BellSouth's CNL identifying the Subsequent Wire

Center List (Subsequent Embedded Base) until one hundred and ten (110) days after the tenth (10th) business day from the date of BellSouth's CNL identifying the Subsequent Wire Center List (Subsequent Transition Period).

10.4 Subsequent disconnects or loss of End Users shall be removed from the Subsequent Embedded Base**.**

10.5 The applicable rate for the Subsequent Embedded Base during the Subsequent Transition Period shall be 115% of the rate for such DS1 and DS3 Dedicated Transport set forth in the Parties' Amendment to the Agreement to implement the Georgia Public Service Commission's Letter Order dated March 2, 2006 in Docket No.14361-U.

10.6 No later than forty (40) days from BellSouth's CNL identifying the Subsequent Wire Center List Access Point shall submit a spreadsheet(s) identifying the Subsequent Embedded Base of circuits to be disconnected or converted to other BellSouth services. In the case of disconnection, the applicable disconnect charges set forth in this Agreement shall apply.

10.7 If Access Point fails to submit the spreadsheet(s) specified in Section 10.6 above for all of its Subsequent Embedded Base within forty (40) days after the date of BellSouth's CNL identifying the Subsequent Wire Center List, BellSouth will identify Access Point's remaining Subsequent Embedded Base, if any, and will transition such circuits to BellSouth's 271 equivalent service as set forth in Section 25 below. Those circuits identified and transitioned by BellSouth pursuant to this Section 10.7 shall be subject to 115% of the switch-as-is rate set forth in the Parties' Amendment to the Agreement to implement the Georgia Public Service Commission's Letter Order dated March 2, 2006 in Docket No.14361-U.

10.8 The applicable 271 rate set forth in the tariff shall apply to the Subsequent Embedded Base as of the 110th day after the 10th business day from the date of BellSouth's CNL identifying the Subsequent Embedded Base.

11. **Modifications and Updates to the Wire Center List and Subsequent Transition Periods for Dark Fiber Transport**

11.1 In the event BellSouth identifies additional wire centers that meet the criteria set forth in Section 3 above, but that were not included in the Initial Wire Center List, BellSouth shall provide notice of such additional wire centers in a Carrier Notification Letter (CNL) sent to the point of contact in this Agreement, or in the absence of such point of contact, BellSouth shall post the CNL on BellSouth's Web site. Each such list of additional wire centers shall be considered a "Subsequent Wire Center List."

11.2 Effective ten (10) business days after the date of BellSouth's notice providing a Subsequent Wire Center List, BellSouth shall not be required to provide unbundled access to Dark Fiber Transport, as applicable, in such additional wire center(s), except pursuant to the self-certification process as set forth in Section 4 above.

11.3 For purposes of this Section 11, BellSouth shall make available Dark Fiber Transport that was in service for Access Point in a wire center on the Subsequent Wire Center List as of the tenth (10th) business day after the date of BellSouth's CNL identifying the Subsequent Wire Center List (Subsequent Embedded Base) until one hundred and ten (110) days after the tenth (10th) business day from the date of BellSouth's CNL identifying the Subsequent Wire Center List (Subsequent Transition Period).

11.4 Subsequent disconnects or loss of End Users shall be removed from the Subsequent Embedded Base.

11.5 The applicable rate for the Subsequent Embedded Base during the Subsequent Transition Period shall be 115% of the rate for such Dark Fiber Transport set forth in the Parties' Amendment to the Agreement to implement the Georgia Public Service Commission's Letter Order dated March 2, 2006 in Docket No.14361-U.

11.6 No later than forty (40) days from BellSouth's CNL identifying the Subsequent Wire Center List, Access Point shall submit a spreadsheet(s) identifying the Subsequent Embedded Base of circuits to be disconnected or converted to other BellSouth services. In the case of disconnection, the applicable disconnect charges set forth in this Agreement shall apply.

11.7 If Access Point fails to submit the spreadsheet(s) specified in Section 11.6 above for all of its Subsequent Embedded Base within forty (40) days after the date of BellSouth's CNL identifying the Subsequent Wire Center List, BellSouth will identify Access Point's remaining Subsequent Embedded Base, if any, and will transition such circuits to BellSouth's equivalent tariffed service set forth in Section 25 below. Those circuits identified and transitioned by BellSouth pursuant to this Section 11.7 shall be subject to 115% of the switch-as-is rate set forth in the Parties' Amendment to the Agreement to implement the Georgia Public Service Commission's Letter Order dated March 2, 2006 in Docket No.14361-U.

11.8 The applicable tariff rate shall apply to the Subsequent Embedded Base as of the 110th day after the 10th business day from the date of BellSouth's CNL identifying the Subsequent Embedded Base.

12. Except to the extent expressly provided otherwise in this Attachment, Access Point may not maintain unbundled network elements or combinations of unbundled network elements, that are no longer offered pursuant to Section 251of the Act (collectively "Arrangements"). In the event Access Point has in place any such Arrangements after the Effective Date of this Agreement, this amendment shall serve as BellSouth's written notice to Access Point that Access Point has thirty (30) days to transition all DS1 Local Switching and UNE-P arrangements and sixty (60) days to transition all other Arrangements. If Access Point fails to submit orders to disconnect or convert such Arrangements within the aforementioned timeframes, BellSouth will transition such circuits to the equivalent tariffed BellSouth service(s). To the extent no tariff equivalent service exists, BellSouth shall disconnect such facility or arrangement. Those circuits identified and transitioned by BellSouth pursuant to this Section 12 shall be subject to 115% of the applicable switch-as-is charges set forth in the Parties' Amendment to the Agreement to implement the Georgia Public Service Commission's Letter Order dated March 2, 2006 in Docket No.14361-U.

12.1 The applicable recurring resale or tariffed charge shall apply to each circuit as of the Effective Date of this Agreement.

13. **Commingling of Services**

13.1 Commingling means the connecting, attaching, or otherwise linking of a Network Element, or a Combination, to one or more Telecommunications Services or facilities that Access Point has obtained at wholesale from BellSouth, or the combining of a Network Element or Combination with one or more such wholesale Telecommunications Services or facilities, consistent with the Georgia Public Service Commission's Order dated March 2, 2006 in Docket No. 19341-U. To the extent a Section 271 facility or service is obtained at wholesale, BellSouth will commingle such facility or service with Section 251 Network Elements or Combinations. Access Point must comply with all rates, terms or conditions applicable to such wholesale Telecommunications Services or facilities.

13.2 Subject to the limitations set forth elsewhere in this Attachment, BellSouth shall not deny access to a Network Element or a Combination on the grounds that one or more of the elements: (1) is connected to, attached to, linked to, or combined with such a facility or service obtained from BellSouth; or (2) shares part of BellSouth's network with access services or inputs for mobile wireless services and/or interexchange services.

13.3 Unless otherwise agreed to by the Parties, the Network Element portion of a commingled circuit will be billed at the rates set forth in the Parties' Amendment to the Agreement to implement the Georgia Public Service Commission's Letter Order dated March 2, 2006 in Docket No.14361-U, and the remainder of the circuit or service will be billed in accordance with either BellSouth's tariffed rates or the 271 rates set forth in Exhibit B of this Agreement, as applicable.

13.4 When multiplexing equipment is attached to a commingled circuit, the multiplexing equipment will be billed from the same agreement or tariff as the higher bandwidth circuit. Central Office Channel Interfaces (COCI) will be billed from the same agreement or tariff as the lower bandwidth circuit.

14. Conversion of Wholesale Services to Network Elements or Network Elements to Wholesale Services.

14.1 Upon request, BellSouth shall convert a wholesale service, or group of wholesale services, to the equivalent Network Element or Combination that is available to Access Point pursuant to this Agreement, or convert a Network Element or Combination that is available to Access Point under this Agreement to an equivalent wholesale service or group of wholesale services offered by BellSouth (collectively "Conversion"). BellSouth shall charge 115% of the switch-as-is rate set forth in the Parties' Amendment to the Agreement to implement the Georgia Public Service

Commission's Letter Order dated March 2, 2006 in Docket No.14361-U for Conversions to specific Network Elements or Combinations**.** BellSouth shall also charge the same nonrecurring switch-as-is rates when converting from Network Elements or Combinations. Any rate change resulting from the Conversion will be effective as of the next billing cycle following BellSouth's receipt of a complete and accurate Conversion request from the CLEC. A Conversion shall be considered termination for purposes of any volume and/or term commitments and/or grandfathered status between CLEC and BellSouth. Any change from a wholesale service/group of wholesale services to a Network Element/Combination, or from a Network Element/Combination to a wholesale service/group of wholesale services that requires a physical rearrangement will not be considered to be a Conversion for purposes of this Agreement. BellSouth shall not require physical rearrangements if the Conversion can be completed through record changes only. Orders for Conversions will be handled in accordance with the guidelines set forth in the Ordering Guidelines and Processes and CLEC Information Packages as referenced in Section 14.3 below.

14.2 To the extent, Access Point had a Conversion request pending between October 2, 2003 and the effective date of this Amendment, such Conversion shall be deemed converted as of the date of such request.

14.3 **Ordering Guidelines and Processes**

14.3.1 For information regarding Ordering Guidelines and Processes for various Network Elements, Combinations and Other Services, Access Point should refer to the "Guides" section of the BellSouth Interconnection Web site.

14.3.2 Additional information may also be found in the individual CLEC Information Packages located at the "CLEC UNE Products" on BellSouth's Interconnection Web site.

14.3.3 The provisioning of Network Elements, Combinations and Other Services to Access Point's Collocation Space will require cross-connections within the central office to connect the Network Element, Combinations or Other Services to the demarcation point associated with Access Point's Collocation Space. These cross-connects are separate components that are not considered a part of the Network Element, Combinations or Other Services and, thus, have a separate charge pursuant to this Agreement.

15. Line Splitting

15.1 Line splitting shall mean that Access Point purchases a whole loop and provides the splitter to provide voice and data services through an

arrangement with a third party CLEC, who is either the provider of data services (Data CLEC) or the provider of voice services (Voice CLEC), to deliver voice and data service to End Users over the same Loop. The Voice CLEC and Data CLEC are different carriers, with Access Point being either the Voice CLEC or Data CLEC.

15.2 Line Splitting – UNE-L. In the event Access Point provides its own switching or obtains switching from a third party, Access Point may engage in line splitting arrangements with another CLEC using a splitter, provided by Access Point, in a Collocation Space at the central office where the loop terminates into a distribution frame or its equivalent.

15.3 Line Splitting – Loop and Port

To the extent Access Point is using a commingled arrangement that consists of an Unbundled Loop purchased pursuant to this Agreement and Local Switching provided by BellSouth pursuant to Section 271, BellSouth will permit Access Point to utilize Line Splitting. BellSouth shall charge the applicable rates ordered by the Georgia Public Service Commission in its March 2, 2006 Letter Order in docket 14361-U.

15.4 Access Point shall provide BellSouth with a signed LOA between it and the third party CLEC (Data **C**LEC or Voice CLEC) with which it desires to provision Line Splitting services, where Access Point will not provide voice and data services.

15.5 Provisioning Line Splitting and Splitter Space – Loop and Port

15.5.1 The Data LEC, Voice CLEC, or a third party may provide the splitter. When Access Point or its authorized agent owns the splitter, Line Splitting requires the following: a non-designed analog Loop from the serving wire center to the NID at the End User's location; a collocation cross-connection connecting the Loop to the collocation space; and a second collocation cross-connection from the collocation space connected to a voice port.

15.5.2 An unloaded 2-wire copper Loop must serve the End User. The meet point for the Voice CLEC and the Data CLEC is the point of termination on the MDF for the Data CLEC's cable and pairs.

15.5.3 The foregoing procedures are applicable to migration from a loop and port arrangement to Line Splitting Service, including a Line splitting service that includes a commingled arrangement of Loop and unbundled local switching pursuant to Section 271.

15.6 CLEC Provided Splitter – Line Splitting – Loop and Port and UNE-L

15.6.1 Access Point or its authorized agent may purchase, install and maintain central office POTS splitters in its collocation arrangements. Access Point

or its authorized agent may use such splitters for access to its customers and to provide digital line subscriber services to its customers using the High Frequency Spectrum. Existing Collocation rules and procedures and the terms and conditions relating to Collocation set forth in Attachment 4-Central Office shall apply.

15.6.2 Any splitters installed by Access Point or its authorized agent in its collocation arrangement shall comply with ANSI T1.413, Annex E, or any future ANSI splitter Standards. Access Point or its authorized agent may install any splitters that BellSouth deploys or permits to be deployed for itself or any BellSouth affiliate.

15.7 Provisioning Line Splitting and Splitter Space – UNE-L

15.7.1 **Access Point** provides the splitter when providing Line Splitting with UNE-L. When Access Point or its authorized agent owns the splitter, Line Splitting requires the following: a loop from NID at the End User's location to the serving wire center and terminating into a distribution frame or its equivalent.

15.8 Maintenance – Line Splitting – Loop and Port and UNE-L

15.8.1 BellSouth will be responsible for repairing troubles with the physical loop between the NID at the End User's premises and the termination point.

15.8.2 BellSouth must make all necessary network modifications, including providing nondiscriminatory access to operations support systems necessary for pre-ordering, ordering, provisioning, maintenance and repair, and billing for loops used in line splitting arrangements.

15.9 Indemnity

15.9.1 Access Point shall indemnify, defend and hold harmless BellSouth from and against any claims, losses, damages and costs incurred by BellSouth, which arise out of actions related to the other service provider, except to the extent caused by BellSouth's gross negligence or willful misconduct.

16. Automatic Location Identification/Data Management System

16.1 911 and E911 Databases

16.1.1 BellSouth shall provide Access Point with nondiscriminatory access to 911 and E911 databases on an unbundled basis, in accordance with 47 C.F.R. § 51.319 (f).

16.1.2 The ALI/DMS database contains End User information (including name, address, telephone information, and sometimes special information from the local service provider or End User) used to determine to which PSAP

to route the call. The ALI/DMS database is used to provide enhanced routing flexibility for E911. Access Point will be required to provide the BellSouth 911 database vendor daily service order updates to E911 database in accordance with Section 16.3.1 below.

16.2 Technical Requirements

16.2.1 BellSouth's 911 database vendor shall provide Access Point the capability of providing updates to the ALI/DMS database through a specified electronic interface. Access Point shall contact BellSouth's 911 database vendor directly to request interface. Access Point shall provide updates directly to BellSouth's 911 database vendor on a daily basis. Updates shall be the responsibility of Access Point and BellSouth shall not be liable for the transactions between Access Point and BellSouth's 911 database vendor.

16.2.2 It is Access Point's responsibility to retrieve and confirm statistical data and to correct errors obtained from BellSouth's 911 database vendor on a daily basis. All errors will be assigned a unique error code and the description of the error and the corrective action is described in the CLEC Users Guide for Facility Based Providers that is found on the BellSouth Interconnection Web site.

16.2.3 Access Point shall conform to the BellSouth standards as described in the CLEC Users Guide to E911 for Facilities Based Providers that is located on the BellSouth's Interconnection Web site.

16.2.4 Stranded Unlocks are defined as End User records in BellSouth's ALI/DMS database that have not been migrated for over ninety (90) days to Access Point, as a new provider of local service to the End User. Stranded Unlocks are those End User records that have been "unlocked" by the previous local exchange carrier that provided service to the End User and are open for Access Point to assume responsibility for such records.

16.2.5 Based upon End User record ownership information available in the NPAC database, BellSouth shall provide a Stranded Unlock annual report to Access Point that reflects all Stranded Unlocks that remain in the ALI/DMS database for over ninety (90) days. Access Point shall review the Stranded Unlock report, identify its End User records and request to either delete such records or migrate the records to Access Point within two (2) months following the date of the Stranded Unlock report provided by BellSouth. Access Point shall reimburse BellSouth for any charges BellSouth's database vendor imposes on BellSouth for the deletion of Access Point's records.

16.3 911 PBX Locate Service®. 911 PBX Locate Service is comprised of a database capability and a separate transport component.

16.3.1 Description of Product. The transport component provides a dedicated trunk path from a Private Branch Exchange (PBX) switch to the appropriate BellSouth 911 tandem.

16.3.1.1 The database capability allows Access Point to offer an E911 service to its PBX End Users that identifies to the PSAP the physical location of the Access Point PBX 911 End User station telephone number for the 911 call that is placed by the End User.

16.3.2 Access Point may order either the database capability or the transport component as desired or Access Point may order both components of the service.

16.3.3 911 PBX Locate Database Capability. Access Point's End User or Access Point's End User's database management agent (DMA) must provide the End User PBX station telephone numbers and corresponding address and location data to BellSouth's 911 database vendor. The data will be loaded and maintained in BellSouth's ALI database.

16.3.4 Ordering, provisioning, testing and maintenance shall be provided by Access Point pursuant to the 911 PBX Locate Marketing Service Description (MSD) that is located on the BellSouth Interconnection Web site.

16.3.5 Access Point's End User, or Access Point's End User database management agent must provide ongoing updates to BellSouth's 911 database vendor within a commercially reasonable timeframe of all PBX station telephone number adds, moves and deletions. It will be the responsibility of Access Point to ensure that the End User or DMA maintain the data pertaining to each End User's extension managed by the 911 PBX Locate Service product. Access Point should not submit telephone number updates for specific PBX station telephone numbers that are submitted by Access Point's End User, or Access Point's End User DMA under the terms of 911 PBX Locate product.

16.3.6 Access Point must provision all PBX station numbers in the same LATA as the E911 tandem.

16.3.7 Access Point agrees to release, indemnify, defend and hold harmless BellSouth from any and all loss, claims, demands, suits, or other action, or any liability whatsoever, whether suffered, made, instituted or asserted by Access Point's End User or by any other party or person, for any personal injury to or death of any person or persons, or for any loss, damage or destruction of any property, whether owned by Access Point or others, or for any infringement or invasion of the right of privacy of any person or persons, caused or claimed to have been caused, directly or indirectly, by the installation, operation, failure to operate, maintenance, removal, presence, condition, location or use of PBX Locate Service features or by any services which are or may be furnished by BellSouth in connection therewith, including but not limited to the identification of the telephone

number, address or name associated with the telephone used by the party or parties accessing 911 services using 911 PBX Locate Service hereunder, except to the extent caused by BellSouth's gross negligence or wilful misconduct. Access Point is responsible for assuring that its authorized End Users comply with the provisions of these terms and that unauthorized persons do not gain access to or use the 911 PBX Locate Service through user names, passwords, or other identifiers assigned to Access Point's End User or DMA pursuant to these terms. Specifically, Access Point's End User or DMA must keep and protect from use by any unauthorized individual identifiers, passwords, and any other security token(s) and devices that are provided for access to this product.

16.3.8 Access Point may only use BellSouth PBX Locate Service solely for the purpose of validating and correcting 911 related data for Access Point's End Users' telephone numbers for which it has direct management authority.

16.3.9 911 PBX Locate Transport Component. The 911 PBX Locate Service transport component requires Access Point to order a CAMA type dedicated trunk from Access Point's End User premise to the appropriate BellSouth 911 tandem pursuant to the following provisions.

16.3.10 Except as otherwise set forth below, a minimum of two (2) End User specific, dedicated 911 trunks are required between the Access Point's End User premise and the BellSouth 911 tandem as described in BellSouth's Technical Reference (TR) 73576 and in accordance with the 911 PBX Locate Marketing Service Description located on the BellSouth Interconnection Web site. Access Point is responsible for connectivity between the End User's PBX and Access Point's switch or POP location. Access Point will then order 911 trunks from their switch or POP location to the BellSouth 911 tandem. The dedicated trunks shall be, at a minimum, DS0 level trunks configured as part of a digital interface (delivered over a Access Point purchased DS1 facility that hands off at a DS1 or higher level digital or optical interface). Access Point is responsible for ensuring that the PBX switch is capable of sending the calling station's Direct Inward Dial (DID) telephone number to the BellSouth 911 tandem in a specified Multi-frequency (MF) Address Signaling Protocol. If the PBX switch supports Primary Rate ISDN (PRI) and the calling stations are DID numbers, then the 911call can be transmitted using PRI, and there will be no requirement for the PBX Locate Transport component.

16.3.11 Ordering and Provisioning. Access Point will submit an Access Service Request (ASR) to BellSouth to order a minimum of two (2) End User specific 911 trunks from its switch or POP location to the BellSouth 911 tandem.

16.3.12 Testing and maintenance shall be provided by Access Point pursuant to the 911 PBX Locate Marketing Service description that is located on the BellSouth Interconnection Web site.

16.3.13 Rates. Rates for the 911 PBX Locate Service database component are set forth in Exhibit A. Trunks and facilities for 911 PBX Locate transport component may be ordered by Access Point pursuant to the terms and conditions set forth in Attachment 3.

17. Fiber to the Home (FTTH) loops are local loops consisting entirely of fiber optic cable, whether dark or lit, serving an End User's premises or, in the case of predominantly residential multiple dwelling units (MDUs), a fiber optic cable, whether dark or lit, that extends to the MDU minimum point of entry (MPOE). As defined in 47 C.F.R. 68.105(B), Fiber to the Curb (FTTC) loops are local loops consisting of fiber optic cable connecting to a copper distribution plant that is not more than five hundred (500) feet from the End User's premises or, in the case of predominantly residential MDUs, not more than five hundred (500) feet from the MDU's MPOE. The fiber optic cable in a FTTC loop must connect to a copper distribution plant at a serving area interface from which every other copper distribution subloop also is not more than five hundred (500) feet from the respective End User's premises.

17.1 In new build (Greenfield) areas, where BellSouth has only deployed FTTH/FTTC facilities, BellSouth is under no obligation to provide such FTTH and FTTC Loops. FTTH facilities include fiber loops deployed to the MPOE of a MDU that is predominantly residential regardless of the ownership of the inside wiring from the MPOE to each End User in the MDU.

18. A hybrid Loop is a local Loop, composed of both, fiber optic cable usually in the feeder plant and copper twisted wire or cable usually in the distribution plant. BellSouth shall provide Access Point with nondiscriminatory access to the time division multiplexing features, functions and capabilities of such hybrid Loop, on an unbundled basis to establish a complete transmission path between BellSouth's central office and an End User's premises.

19. Routine Network Modifications

19.1 BellSouth will perform Routine Network Modifications (RNM) in accordance with FCC 47 CFR 51.319 (a)(7) and (e)(4) for Loops and Dedicated Transport provided under this Attachment. BellSouth shall make all routine network modifications to unbundled loop and transport facilities used by Access Point at Access Point's request where the requested loop and/or transport facility has already been constructed. BellSouth shall perform these routine network modifications to facilities in a non-discriminatory fashion, without regard to whether the loop or transport facility being accessed was constructed on behalf, or in accordance with the specifications, of any carrier. A routine network modification is an activity that BellSouth regularly undertakes for its own customers. Routine network modifications include, but are not limited to, rearranging or splicing of cable; adding an equipment case; adding a doubler or repeater; adding a smart jack; installing a repeater shelf; adding a line card; deploying a new multiplexer or reconfiguring an existing multiplexer; and attaching electronic and other equipment that BellSouth ordinarily attaches to a loop or transport facility to serve its own customers. Routine network modifications may entail activities such as accessing manholes, deploying bucket trucks to reach aerial cable, and installing equipment casings. Routine network modifications do not include the construction of a new loop, or the installation of new aerial or buried cable for Access Point.

19.2 BellSouth shall perform routine network modifications pursuant to the existing non-recurring charges and recurring rates ordered by the state commission for the loop and transport facilities set forth in Exhibit A of Attachment 2 of the Agreement and not at an additional charge. RNM shall be performed within the intervals established for the Network Element and subject to the performance measurements and associated remedies set forth in Attachment 9 of this Agreement except to the extent BellSouth demonstrates that such RNM were not anticipated in the setting of such intervals. If BellSouth believes that it has not anticipated a requested network modification as being a RNM and has not recovered the costs of such RNM in the rates set forth in Exhibit A of Attachment 2of the Agreement, BellSouth can seek resolution from the state commission. However, in the interim, BellSouth will perform the RNM at the existing recurring and non-recurring rates associated with the provision of the loop or transport facility. There may not be any double recovery or retroactive recovery of these costs.

20. Furthermore, in FTTH/FTTC overbuild areas where BellSouth has not yet retired copper facilities, BellSouth is not obligated to ensure that such copper Loops in that area are capable of transmitting signals prior to receiving a request for access to such Loops by Access Point. If a request

is received by BellSouth for a copper Loop, and the copper facilities have not yet been retired, BellSouth will restore the copper Loop to serviceable condition if technically feasible. In these instances of Loop orders in an FTTH/FTTC overbuild area, BellSouth's standard Loop provisioning interval will apply.

21. EELs Audit provisions

21.1 BellSouth may, on an annual basis audit Access Point's records based on cause, in order to verify compliance with the high capacity EEL eligibility criteria. To invoke its limited right to audit, BellSouth will send a Notice of Audit to Access Point stating its concern that Access Point is not complying with the service eligibility requirements as set forth above and a concise statement of the reasons therefore. Such Notice of Audit will be delivered to Access Point no less than thirty (30) calendar days prior to the date upon which BellSouth seeks to commence an audit. BellSouth is not required to provide documentation, as distinct from a statement of concern, to support its basis for an audit, or seek the concurrence of the requesting carrier before selecting the location of the audit.

21.2 The audit shall be conducted by a third party independent auditor, retained and paid for by BellSouth. BellSouth may select the independent auditor without the prior approval of Access Point or the Commission. Challenges to the independence of the auditor may be filed with the Commission only after the audit has been concluded. The audit must be performed in accordance with the standards established by the American Institute for Certified Public Accountants (AICPA) which will require the auditor to perform an "examination engagement" and issue an opinion regarding Access Point's compliance with the high capacity EEL eligibility criteria. AICPA standards and other AICPA requirements will be used to determine the independence of an auditor. The independent auditor's report will conclude whether Access Point complied in all material respects with the applicable service eligibility criteria. Consistent with standard auditing practices, such audits require compliance testing designed by the independent auditor.

21.3 To the extent the independent auditor's report concludes that Access Point failed to comply with the service eligibility criteria, Access Point must true-up any difference in payments, convert all noncompliant circuits to the appropriate service, and make the correct payments on a going-forward basis.

21.4 To the extent the independent auditor's report concludes that Access Point failed to comply in all material respects with the service eligibility criteria,

Access Point shall reimburse BellSouth for the cost of the independent auditor. To the extent the independent auditor's report concludes that Access Point did comply in all material respects with the service eligibility criteria, BellSouth will reimburse Access Point for its reasonable and demonstrable costs associated with the audit. Access Point will maintain appropriate documentation to support its certifications. The Parties shall provide such reimbursement within thirty (30) calendar days of receipt of a statement of such costs.

22. Access Point shall not obtain a Network Element for the exclusive provision of mobile wireless services or interexchange services.

23. Facilities that do not terminate at a demarcation point at an End User premises, including, by way of example, but not limited to, facilities that terminate to another carrier's switch or premises, a cell site, Mobile Switching Center or base station, do not constitute local Loops under Section 251, except to the extent that Access Point may require Loops to such locations for the purpose of providing telecommunications services to its personnel at those locations.

24. <u>Subloop Elements.</u>

24.1 Where facilities permit, BellSouth shall offer access to its Unbundled Subloop (USL) elements as specified herein.

24.2 <u>Unbundled Subloop Distribution (USLD)</u>

24.2.1 The USLD facility is a dedicated transmission facility that BellSouth provides from an End User's point of demarcation to a BellSouth cross-connect device. The BellSouth cross-connect device may be located within a remote terminal (RT) or a stand-alone cross-box in the field or in the equipment room of a building. The USLD media is a copper twisted pair that can be provisioned as a 2-wire or 4-wire facility. BellSouth will make available the following subloop distribution offerings where facilities exist:

USLD – Voice Grade (USLD-VG)
Unbundled Copper Subloop (UCSL)
USLD – Intrabuilding Network Cable (USLD-INC (aka riser cable))

24.2.2 USLD-VG is a copper subloop facility from the cross-box in the field up to and including the point of demarcation at the End User's premises and may have load coils.

24.2.3 UCSL is a copper facility eighteen thousand (18,000) feet or less in length provided from the cross-box in the field up to and including the End User's point of demarcation. If available, this facility will not have any intervening equipment such as load coils between the End User and the cross-box.

24.2.4 If Access Point requests a UCSL and it is not available, Access Point may request the copper Subloop facility be modified pursuant to the ULM process to remove load coils and/or excessive bridged taps. If load coils and/or excessive bridged taps are removed, the facility will be classified as a UCSL.

24.2.5 USLD-INC is the distribution facility owned or controlled by BellSouth inside a building or between buildings on the same property that is not separated by a public street or road. USLD-INC includes the facility from the cross-connect device in the building equipment room up to and including the point of demarcation at the End User's premises.

24.2.6 Upon request for USLD-INC from Access Point, BellSouth will install a cross-connect panel in the building equipment room for the purpose of accessing USLD-INC pairs from a building equipment room. The cross-connect panel will function as a single point of interconnection (SPOI) for USLD-INC and will be accessible by multiple carriers as space permits. BellSouth will place cross-connect blocks in twenty five (25) pair increments for Access Point's use on this cross-connect panel. Access Point will be responsible for connecting its facilities to the twenty five (25) pair cross-connect block(s).

24.2.7 For access to Voice Grade USLD and UCSL, Access Point shall install a cable to the BellSouth cross-box pursuant to the terms and conditions for physical collocation for remote sites set forth in Attachment 4. This cable would be connected by a BellSouth technician within the BellSouth cross-box during the set-up process. Access Point's cable pairs can then be connected to BellSouth's USL within the BellSouth cross-box by the BellSouth technician.

24.2.8 Through the SI process, BellSouth will determine whether access to USLs at the location requested by Access Point is technically feasible and whether sufficient capacity exists in the cross-box. If existing capacity is sufficient to meet Access Point's request, then BellSouth will perform the site set-up as described in the CLEC Information Package, located at BellSouth's Interconnection Web site: www.interconnection.bellsouth.com/products/html/unes.html.

24.2.9 The site set-up must be completed before Access Point can order Subloop pairs. For the site set-up in a BellSouth cross-connect box in the field,

BellSouth will perform the necessary work to splice Access Point's cable into the cross-connect box. For the site set-up inside a building equipment room, BellSouth will perform the necessary work to install the cross-connect panel and the connecting block(s) that will be used to provide access to the requested USLs.

24.2.10 Once the site set-up is complete, Access Point will request Subloop pairs through submission of a LSR form to the LCSC. OC is required with USL pair provisioning when Access Point requests reuse of an existing facility, and the OC charge shall be billed in addition to the USL pair rate. For expedite requests by Access Point for Subloop pairs, expedite charges will apply for intervals less than five (5) days.

24.2.11 USLs will be provided in accordance with BellSouth's TR73600 Unbundled Local Loop Technical Specifications.

24.3 Unbundled Network Terminating Wire (UNTW)

24.3.1 UNTW is unshielded twisted copper wiring that is used to extend circuits from an intra-building network cable terminal or from a building entrance terminal to an individual End User's point of demarcation. It is the final portion of the Loop that in multi-subscriber configurations represents the point at which the network branches out to serve individual subscribers.

24.3.1.1 This element will be provided in MDUs and/or Multi-Tenants Units (MTUs) where either Party owns wiring all the way to the End User's premises. Neither Party will provide this element in locations where the property owner provides its own wiring to the End User's premises, where a third party owns the wiring to the End User's premises.

24.3.2 Requirements

24.3.2.1 On a multi-unit premises, upon request of the other Party (Requesting Party), the Party owning the network terminating wire (Provisioning Party) will provide access to UNTW pairs on an Access Terminal that is suitable for use by multiple carriers at each Garden Terminal or Wiring Closet.

24.3.2.2 The Provisioning Party shall not be required to install new or additional NTW beyond existing NTW to provision the services of the Requesting Party.

24.3.2.3 In existing MDUs and/or MTUs in which BellSouth does not own or control wiring (INC/NTW) to the End Users premises, and Access Point does own or control such wiring, Access Point will install UNTW Access Terminals for BellSouth under the same terms and conditions as BellSouth provides UNTW Access Terminals to Access Point.

24.3.2.4 In situations in which BellSouth activates a UNTW pair, BellSouth will compensate Access Point for each pair activated commensurate to the price specified in Access Point's Agreement.

24.3.2.5 Upon receipt of the UNTW SI requesting access to the Provisioning Party's UNTW pairs at a multi-unit premises, representatives of both Parties will participate in a meeting at the site of the requested access. The purpose of the site visit will include discussion of the procedures for installation and location of the Access Terminals. By request of the Requesting Party, an Access Terminal will be installed either adjacent to each of the Provisioning Party's Garden Terminal or inside each Wiring Closet. The Requesting Party will deliver and connect its central office facilities to the UNTW pairs within the Access Terminal. The Requesting Party may access any available pair on an Access Terminal. A pair is available when a pair is not being utilized to provide service or where the End User has requested a change in its local service provider to the Requesting Party. Prior to connecting the Requesting Party's service on a pair previously used by the Provisioning Party, the Requesting Party is responsible for ensuring the End User is no longer using the Provisioning Party's service or another CLEC's service before accessing UNTW pairs.

24.3.2.6 Access Terminal installation intervals will be established on an individual case basis.

24.3.2.7 The Requesting Party is responsible for obtaining the property owner's permission for the Provisioning Party to install an Access Terminal(s) on behalf of the Requesting Party. The submission of the SI by the Requesting Party will serve as certification by the Requesting Party that such permission has been obtained. If the property owner objects to Access Terminal installations that are in progress or within thirty (30) days after completion and demands removal of Access Terminals, the Requesting Party will be responsible for costs associated with removing Access Terminals and restoring the property to its original state prior to Access Terminals being installed.

24.3.2.8 The Requesting Party shall indemnify and hold harmless the Provisioning Party against any claims of any kind that may arise out of the Requesting Party's failure to obtain the property owner's permission. The Requesting Party will be billed for nonrecurring and recurring charges for accessing UNTW pairs at the time the Requesting Party activates the pair(s). The Requesting Party will notify the Provisioning Party within five (5) business days of activating UNTW pairs using the LSR form.

24.3.2.9 If a trouble exists on a UNTW pair, the Requesting Party may use an alternate spare pair that serves that End User if a spare pair is available. In such cases, the Requesting Party will re-terminate its existing jumper from the defective pair to the spare pair. Alternatively, the Requesting Party will isolate and report troubles in the manner specified by the Provisioning Party. The Requesting Party must tag the UNTW pair that requires repair. If the Provisioning Party dispatches a technician on a reported trouble call and no UNTW trouble is found, the Provisioning Party will charge

Requesting Party for time spent on the dispatch and testing the UNTW pair(s).

24.3.2.10 If the Requesting Party initiates the Access Terminal installation and the Requesting Party has not activated at least ten percent (10%) of the capacity of the Access Terminal installed pursuant to the Requesting Party's request for an Access Terminal within six (6) months of installation of the Access Terminal, the Provisioning Party will bill the Requesting Party a nonrecurring charge equal to the actual cost of provisioning the Access Terminal.

24.3.2.11 If the Provisioning Party determines that the Requesting Party is using the UNTW pairs without reporting the activation of the pairs, the Requesting Party will be billed for the use of that pair back to the date the End User began receiving service from the Requesting Party at that location. Upon request, the Requesting Party will provide copies of its billing record to substantiate such date. If the Requesting Party fails to provide such records, then the Provisioning Party will bill the Requesting Party back to the date of the Access Terminal installation.

25. **271 Requirements**

25.1 This Section sets forth terms and conditions for de-listed network elements that BellSouth is required to offer pursuant to the Georgia Public Service Commission's Order in Docket No. 19341-U (Order) to Access Point for Access Point's provision of Telecommunications Services in accordance with its obligations under Section 271 of the Act ("271").

25.1.1 To the extent DS1 and/or DS3 Loops, DS1 and/or DS3 Dedicated Transport and Multiplexing are not available elsewhere in the Agreement, these services will be made available pursuant to Section 271 of the Act at the rates set forth in Exhibit B to this Amendment.

25.2 271 Dark Fiber Loops, 271 DS1 and DS3 Entrance Facilities, and 271 Dark Fiber Transport Facilities are available at the rates, terms, and conditions set forth in the applicable BellSouth tariff.

25.3 Line Sharing

25.3.1 General**.** Line Sharing is defined as the process by which Access Point provides digital subscriber line service ("xDSL") over the same copper Loop that BellSouth uses to provide retail voice service, with BellSouth using the low frequency portion of the Loop and Access Point using the high frequency spectrum (as defined below) of the Loop.

25.3.2 Line Sharing arrangements in service as of October 1, 2003 will be billed at the rates set forth in the Parties' Amendment to the Agreement to

implement the Georgia Public Service Commission's Letter Order dated March 2, 2006 in Docket No.14361-U**.**

25.3.3 For Line Sharing arrangements placed in service between October 2, 2003, and October 1, 2004 the rates set forth in the Parties' Amendment to the Agreement to implement the Georgia Public Service Commission's Letter Order dated March 2, 2006 in Docket No.14361-U**.**

25.3.4 For Line Sharing arrangements placed on or after October 2, 2004 (whether under this Agreement only, or under this Agreement and a prior Agreement), the rates will be the full copper loop rate as set forth in the Parties' Amendment to the Agreement to implement the Georgia Public Service Commission's Letter Order dated March 2, 2006 in Docket No.14361-U.

25.3.5 As of October 2, 2006, the rates for Line Sharing arrangements shall be as set forth in Exhibit B of this Amendment.

25.3.6 The High Frequency Spectrum is defined as the frequency range above the voiceband on a copper Loop facility carrying analog circuit-switched voiceband transmissions. Access to the High Frequency Spectrum is intended to allow Access Point the ability to provide xDSL data services to the End User for which BellSouth provides voice services.

25.3.7 The High Frequency Spectrum shall be available for any version of xDSL complying with Spectrum Management Class *5* of ANSI TI.417**,** American National Standard for Telecommunications, Spectrum Management for Loop Transmission Systems. BellSouth will continue to have access to the low frequency portion of the Loop spectrum (from 300 Hertz to at least 3000 Hertz, and potentially up to 3400 Hertz, depending on equipment and facilities) for the purposes of providing voice service. Access Point shall only use xDSL technology that is within the PSD mask for Spectrum Management Class *5* as found in the abovementioned document.

25.3.8 Access to the High Frequency Spectrum requires an unloaded, 2-wire copper Loop. An unloaded Loop is a copper Loop with no load coils, lowpass filters, range extenders, DAMLs, or similar devices and minimal bridged taps consistent with ANSI T1.413 and TI .601.

25.3.9 BellSouth will provide Loop Modification to Access Point on an existing Loop for Line Sharing in accordance with procedures as specified in Attachment 2 of this Agreement. BellSouth is not required to modify a Loop for access to the High Frequency spectrum if modification of that Loop significantly degrades BellSouth's voice service. If Access Point requests that BellSouth modify a Loop and such modification significantly degrades the voice services on the Loop, Access Point shall pay for the Loop to be restored to its original state.

25.3.10 Line Sharing shall only be available on Loops on which BellSouth is also providing, and continues to provide, analog voice service directly to the End User. In the event the End User terminates its BellSouth provided voice service for any reason, or in the event BellSouth disconnects the End User's voice service pursuant to its tariffs or applicable law, and Access Point desires to continue providing xDSL service on such Loop, Access Point or the new voice provider, or both, shall be required to purchase a full stand-alone Loop. In those cases in which BellSouth no longer provides voice service to the End User and Access Point purchases the full stand-alone Loop, Access Point may elect the type of Loop it will purchase. Access Point will pay the appropriate recurring and nonrecurring rates for such Loop as set forth in the Parties' Amendment to the Agreement to implement the Georgia Public Service Commission's Letter Order dated March 2, 2006 in Docket No.14361-U. In the event Access Point purchases a voice grade Loop, Access Point acknowledges that such Loop may not remain xDSL compatible.

25.3.11 Only one CLEC shall be permitted access to the High Frequency Spectrum of any particular Loop.

25.3.12 <u>Provisioning of Line Sharing and Splitter Space.</u> BellSouth will provide Access Point with access to the High Frequency Spectrum as follows:

25.3.12.1 To order High Frequency Spectrum on a particular Loop, Access Point must have a Digital Subscriber Line Access Multiplexer (DSLAM) collocated in the central office that serves the End User of such Loop.

25.3.12.2 Access Point may provide its own splitters or may order splitters in a central office once it has installed its DSLAM in that central office. BellSouth will install splitters within thirty-six (36) calendar days of Access Point's submission of an error free Line Splitter Ordering Document (LSOD) to the BellSouth Complex Resale Support Group.

25.3.12.3 Once a splitter is installed on behalf of Access Point in a central office in which Access Point is located, Access Point shall be entitled to order the High Frequency Spectrum on lines served out of that central office. BellSouth will bill and Access Point shall pay the electronic or manual ordering charges, as set forth in Exhibit A of Attachment 2 of the Agreement, as applicable when Access Point orders High Frequency Spectrum for End User service.

25.3.12.4 Once BellSouth has placed cross-connects on behalf of Access Point to provide Access Point access to the High Frequency Spectrum and chooses to rearrange its splitter or CLEC pairs, Access Point may order the rearrangement of its splitter or cable pairs via "Subsequent Activity". Subsequent Activity is any rearrangement of Access Point's cable pairs or splitter ports after BellSouth has placed cross-connection to provide Access Point access to the High Frequency Spectrum. BellSouth shall bill and Access Point shall pay the Subsequent Activity charges as set forth in Exhibit B of this Amendment.

25.3.13 BellSouth Provided Splitter – Line Sharing. BellSouth will select, purchase, install, and maintain a central office POTS splitter and provide Access Point access to data ports on the splitter. The splitter will route the High Frequency Spectrum on the circuit to Access Point's xDSL equipment in Access Point's collocation space. At least thirty (30) calendar days before making a change in splitter suppliers, BellSouth will provide Access Point with a carrier notification letter, informing Access Point of change. Access Point shall purchase ports on the splitter in increments of eight (8), twenty-four (24), or ninety-six (96) ports.

25.3.14 BellSouth will install the splitter in (i) a common area close to Access Point's collocation area, if possible; or (ii) in a BellSouth relay rack as close to Access Point's DS0 termination point as possible. For purposes of this section, a common area is defined as an area in the central office in which both Parties have access to a common test access point. A Termination Point is defined as the point of termination for Access Point on the main distributing frame in the central office and is not the demarcation point set forth in Attachment 4 of this Agreement. BellSouth will cross-connect the splitter data ports to a specified Access Point DS0 at such time that a Access Point End User's service is established.

25.3.15 CLEC Provided Splitter – Line Sharing. Access Point may at its option purchase, install and maintain central office POTS splitters in its collocation arrangements. Access Point may use such splitters to provide xDSL services to its End Users using the High Frequency Spectrum. Existing Collocation rules and procedures and the terms and conditions

relating to Collocation set forth in Attachment 4-Central Office shall apply.

25.3.16 Any splitters installed by Access Point in its collocation arrangement shall comply with ANSI T1.413, Annex E, or any future ANSI splitter Standards. Access Point may install any splitters that BellSouth deploys or permits to be deployed for itself or any BellSouth affiliate.

25.3.17 Ordering – Line Sharing. Access Point shall use BellSouth's LSOD to order splitters from BellSouth and to activate and deactivate DS0 Collocation Connecting Facility Assignments (CFA) for use with High Frequency Spectrum.

25.3.18 BellSouth's Local Ordering Handbook (LOH) will provide Access Point the LSR format to be used when ordering disconnections of the High Frequency Spectrum or Subsequent Activity.

25.3.19 BellSouth will provision High Frequency Spectrum in compliance with BellSouth's Products and Services Interval Guide available at BellSouth's Interconnection Web site.

25.3.20 BellSouth shall test the data portion of the Loop to ensure the continuity of the wiring for Access Point's data.

25.3.21 BellSouth will provide Access Point access to Preordering LMU in accordance with the terms of this Agreement. BellSouth shall bill and Access Point shall pay the rates for such services, as described in Exhibit B of this Amendment.

25.3.22 Maintenance and Repair - Line Sharing. Access Point shall have access for repair and maintenance purposes to any Loop for which it has access to the High Frequency Spectrum. Access Point may test from the collocation space, the Termination Point, or the NID. BellSouth will be responsible for repairing voice services and the physical line between the NID at the End User's premises and the Termination Point. Access Point will be responsible for repairing its data services. Each Party will be responsible for maintaining its own equipment.

25.3.23 Access Point shall inform its End Users to direct data problems to Access Point, unless both voice and data services are impaired, in which event

Access Point should direct the End Users to contact BellSouth. Once a Party has isolated a trouble to the other Party's portion of the Loop, the Party isolating the trouble shall notify the End User that the trouble is on the other Party's portion of the Loop.

25.3.24 If Access Point reports a trouble on the High Frequency Spectrum of a Loop and no trouble actually exists on the BellSouth portion, or BellSouth isolates the trouble to the physical collocation arrangement belonging to Access Point, BellSouth will charge Access Point for any dispatching and testing (both inside and outside the CO) required by BellSouth in order to confirm the working status. The rates charged for no trouble found (NTF) shall be as set forth in Exhibit B of this Amendment.

271 ELEMENTS - Georgia														Attachment: 2 Exh B				
CATEGORY	RATE ELEMENTS	Interim	Zone	BCS	USOC	RATES($)					Svc Order Submitted Elec per LSR	Svc Order Submitted Manually per LSR	Incremental Charge - Manual Svc Order vs. Electronic-1st	Incremental Charge - Manual Svc Order vs. Electronic-Add'l	Incremental Charge - Manual Svc Order vs. Electronic-Disc 1st	Incremental Charge - Manual Svc Order vs. Electronic-Disc Add'l	
							Nonrecurring		Nonrecurring Disconnect		OSS Rates($)						
						Rec	First	Add'l	First	Add'l	SOMEC	SOMAN	SOMAN	SOMAN	SOMAN	SOMAN	
	The "Zone" shown in the sections for stand-alone loops or loops as part of a combination refers to Geographically Deaveraged UNE Zones. To view Geographically Deaveraged UNE Zone Designations by Central Office, refer to internet Website: http://www.interconnection.bellsouth.com/become_a_clec/html/interconnection.htm																
UNBUNDLED EXCHANGE ACCESS LOOP																	
	4-WIRE DS1 DIGITAL LOOP																
	271 - 4-Wire DS1 Digital Loop - Zone 1		1	USL	271UC	85.97	211.72	72.42	38.20	7.19							
	271 - 4-Wire DS1 Digital Loop - Zone 2		2	USL	271UC	81.27	211.72	72.42	38.20	7.19							
	271 - 4-Wire DS1 Digital Loop - Zone 3		3	USL	271UC	128.28	211.72	72.42	38.20	7.19							
COMMINGLING																	
	COMMINGLING (Loop as part of a multi-bandwidth commingling arrangement)																
	4-Wire DS1 Digital Loop - Zone 1					85.97	211.72	72.42	38.20	7.19							
	4-Wire DS1 Digital Loop - Zone 2					81.27	211.72	72.42	38.20	7.19							
	4-Wire DS1 Digital Loop - Zone 3					128.28	211.72	72.42	38.20	7.19							
LINE SHARING																	
	NOTE: The Line Sharing monthly recurring rates for all installations completed on or after October 02, 2003 shall be billed as follows:																
	NOTE 2: These line sharing rates are effective Octover 2, 2006																
	LINE SHARING																
	SPLITTERS-CENTRAL OFFICE BASED																
	Line Sharing Splitter, per System 96 Line Capacity w/o test jack (E:10/2/2006)			ULS	ULSDA	117.18	243.66	0.00	90.11	0.00							
	Line Sharing Splitter, per System 24 Line Capacity w/o test jack (E:10/2/2006)			ULS	ULSDB	29.30	243.66	0.00	90.11	0.00							
	Line Sharing Splitter, Per System, 8 Line Capacity w/o test jack (E:10/2/2006)			ULS	ULSD8	9.77	243.66	0.00	90.11	0.00							
	END USER ORDERING-CENTRAL OFFICE BASED LINE SHARING																
	Line Sharing - per Line Activation (BST Owned splitter) (E:10/2/2006)			ULS	ULSDT	6.50	24.53	0.00	12.26	0.00							
	Line Sharing - per Subsequent Activity per Line Rearrangement (BST Owned Splitter) (E:10/2/2006)			ULS	ULSDS		48.91	17.86	22.87	2.28							
	Loop Modification																
	Unbundled Loop Modification -- Load Coil/Equipment Removal (E:10/2/2006)			ULS	ULM2L		29.97										
	Unbundled Loop Modification -- Bridged Tap Removal (E:10/2/2006)			ULS	ULMBT		68.11										
	MAINTENANCE																
	No Trouble Found - per 1/2 hour increments - Basic						80.00	0.00									
	No Trouble Found - per 1/2 hour increments - Overtime						120.00	0.00									
	No Trouble Found - per 1/2 hour increments - Premium						160.00	0.00									
GA 271																	
	DS1 Interoffice Channel Facility Termination (271 standalone)			U1TD1	271UA	44.04	110.92	80.20	31.33	21.71							
	DS1 Interoffice Channel per mile (271 standalone)			U1TD1	1L5UB	0.1417											
	DS3 Interoffice Channel Facility Termination (271 standalone)			U1TD3	271NA	440.53	320.16	86.24	66.71	52.76							
	DS3 Interoffice Channel per mile (271 standalone)			U1TD3	1L5NB	3.11											
	DS3 Local Loop Facility Termination (271 standalone)			UE3	271NC	323.53	1,751.51	131.77	112.80	75.81							
	DS3 Local Loop per mile (271 standalone)			UE3	1L5NG	13.47											
	DS1 Interoffice Channel Facility Termination (271 part combination)			UNC1X	271UA	44.04	110.92	80.20	31.33	21.71							
	DS1 Interoffice Channel per mile (271 part in combination)			UNC1X	1L5UB	0.1417											
	DS3 Interoffice Channel Facility Termination (271 part in combination)			UNC3X	271NA	440.53	320.16	86.24	66.71	52.76							
	DS3 Interoffice Channel per mile (271 part in combination)			UNC3X	1L5NB	3.11											
	DS3/DS1 Channel System (271 part in combination)			UNC3X	271BS	157.48	0.00	0.00	0.00	0.00							
	DS3 Local Loop Facility Termination (271 part in combination)			UNC3X	271NC	323.53	1,751.51	131.77	112.80	75.81							
	DS3 Local Loop per mile (271 part in combination)			UNC3X	1L5NG	13.47											
	DS1 Local Loop in combination (271 part in combination)		1	UNC1X	271UC	85.97	209.25	70.37	37.87	6.86							
	DS1 Local Loop in combination (271 part in combination)		2	UNC1X	271UC	81.27	209.25	70.37	37.87	6.86							
	DS1 Local Loop in combination (271 part in combination)		3	UNC1X	271UC	128.28	209.25	70.37	37.87	6.86							
	DS1 COCI (271 part in combination)			UNC1X	271UK	9.50	27.30	2.90	16.85	1.04							

Requirements for DS1 and DS3 Loops

1. Access Point may obtain a maximum of ten (10) unbundled DS1 Loops to any single building in which such Loops are still subject to unbundling requirements.

1.1 Access Point may obtain a maximum of one (1) Unbundled DS3 Loop to any single building in which such Loops are still subject to unbundling requirements.

1.2 Access Point may obtain access to the following:

1.2.1 Unbundled DS1 Loops to any Building not served by a wire center with at least 60,000 Business Lines and four (4) or more fiber-based collocators.

1.2.2 Unbundled DS3 Loops to any Building not served by a wire center with at least 38,000 Business Lines and four (4) or more fiber-based collocators.

1.3 The Initial Non-Impaired Wire Center List adopted by the Commission setting forth the wire centers meeting the criteria set forth in Sections 1.2.1 and 1.2.2 above, is available on BellSouth's Interconnection Web site.

1.4 Transition Period Pricing. From March 11, 2005, through the expiration of the Transition Period, BellSouth shall charge/collect a rate for Access Point's Embedded Base and Access Point's Excess DS1 and DS3 Loops equal to the higher of:

1.4.1 115% of the rate paid for that element on June 15, 2004; or

1.4.2 115% of any new rate the Commission establishes between June 16, 2004 and March 11, 2005.

1.4.3 These rates shall be as set forth in Exhibit _ to Attachment __ of the Agreement and this Section 1.4.

2. Dedicated Transport and Dark Fiber Transport

2.1 **Dedicated Transport**. Dedicated Transport is defined as BellSouth's transmission facilities between wire centers or switches owned by BellSouth, or between wire centers or switches owned by BellSouth and switches owned by Access Point, including but not limited to DS1, DS3 and OCn level services, as well as dark fiber, dedicated to Access Point. BellSouth shall not be required to

provide access to OCn level Dedicated Transport under any circumstances pursuant to this Agreement.

2.2 Requirements for DS1 and DS3 Dedicated Transport

2.2.1 Access Point may obtain access to the following:

2.2.1.1 DS1 Transport except on routes connecting a pair of wire centers, where both wire centers contain at least four (4) fiber-based collocators or at least 38,000 Business access lines.

2.2.1.2 DS3 Transport except on routes connecting a pair of wire centers, each of which contains at least three (3) fiber-based collocators or at least 24,000 Business access lines.

2.2.1.3 Access Point may obtain a maximum of twelve (12) unbundled DS3 Dedicated Transport circuits on each route where DS3 Dedicated Transport is available as a Network Element, and a maximum of ten (10) unbundled DS1 Dedicated Transport circuits on each Route where there is no 251(c)(3) unbundling obligation for DS3 Dedicated Transport but for which impairment exists for DS1 Dedicated Transport.

2.2.2 The Initial Non-Impaired Wire Center List adopted by the Commission setting forth the wire centers meeting the criteria set forth in Sections 2.2.1.1 and 2.2.1.2 above, is available on BellSouth's Interconnection Web site.

2.3 **Dark Fiber Transport**. Dark Fiber Transport is defined as Dedicated Transport that consists of unactivated optical interoffice transmission facilities without attached signal regeneration, multiplexing, aggregation or other electronics. Except as set forth in Section 2.3.1 below, BellSouth shall not be required to provide access to Dark Fiber Transport Entrance Facilities pursuant to this Agreement.

2.3.1 Requirements for Dark Fiber Transport

2.3.2 Access Point may obtain access to the following:

2.3.2.1 Dark Fiber Transport except on routes connecting a pair of wire centers, each of which contains at least three (3) fiber-based collocators or 24,000 Business access lines.

2.3.3 The Initial Non-Impaired Wire Center List adopted by the Commission setting forth the wire centers meeting the criteria set forth in Section 2.3.2.1 above, is available on BellSouth's Interconnection Web site.

3. (i) Business Line

3.1 For purposes of this Attachment 2, a "Business Line" is, as defined in 47 C.F.R. § 51.5, a BellSouth-owned switched access line used to serve a business customer, whether by BellSouth itself or by a CLEC that leases the line from BellSouth. The number of business lines in a wire center shall equal the sum of all BellSouth business switched access lines, plus the sum of all UNE loops connected to that wire center, including UNE loops provisioned in combination with other unbundled elements. Among these requirements, business line tallies (1) shall include only those access lines connecting end-user customers with BellSouth end-offices for switched services, (2) shall not include non-switched special access lines, (3) shall account for ISDN and other digital access lines by counting each 64 kbps-equivalent as one line. For example, a DS1 line corresponds to 24 64 kbps-equivalents, and therefore to 24 "business lines."

3.2 (ii) Fiber-Based Collocation

3.2.1 For purposes of this Attachment 2 a "Fiber-Based Collocator" is, as defined in 47 C.F.R. § 51.5, any carrier, unaffiliated with BellSouth, that maintains a collocation arrangement in a BellSouth wire center, with active electrical power supply, and operates a fiber-optic cable or comparable transmission facility that (1) terminates at a collocation arrangement within the wire center; (2) leaves the BellSouth wire center premises; and (3) is owned by a party other than BellSouth or any affiliate of BellSouth, except as set forth in this paragraph. Dark fiber obtained from an incumbent LEC on an indefeasible right of use basis shall be treated as non-incumbent LEC fiber-optic cable. Two or more affiliated fiber-based collocators in a single wire center shall collectively be counted as a single fiber-based collocator. For purposes of this paragraph, the term affiliate is defined by 47 U.S.C. § 153(1) and any relevant interpretation in this Title.

3.3 (iii) Building

3.3.1 For purposes of this Attachment 2, a "Building" is a permanent physical structure including, but not limited to, a structure in which people reside, or conduct business or work on a daily basis and through which there is one centralized point of entry in the structure through which all telecommunications services must transit. As an example only, a high rise office building with a general telecommunications equipment room through which all telecommunications services to that building's tenants must pass would be a single "building" for purposes of this Attachment. Two or more physical areas served by individual points of entry through which telecommunications services must transit will be considered separate buildings. For instance, a strip mall with individual businesses obtaining telecommunication services from different access points on the building(s) will be considered individual buildings, even though they might share common walls.

3.4 <u>(iv) Route</u>

3.4.1 For purposes of this Attachment 2, a "Route" is, as defined in 47 C.F.R. §. 51.319(e), a transmission path between one of an incumbent LEC's wire centers or switches and another of the incumbent LEC's wire centers or switches. A route between two points (e.g. wire center or switch "A" and wire center or switch "Z") may pass through one or more intermediate wire centers or switches (e.g., wire center or switch "X"). Transmission paths between identical end points (e.g., wire center or switch "A" and wire center or switch "Z") are the same "route," irrespective of whether they pass through the same intermediate wire centers or switches, if any.

4. In the event that (1) BellSouth designates a wire center as non-impaired, (2) Access Point converts existing UNEs to other services or orders new services as services other than UNEs, (3) Access Point otherwise would have been entitled to UNEs in such wire center at the time alternative services provisioned, and (4) BellSouth acknowledges or a state or federal agency regulatory body with authority determines that, at the time BellSouth designated such wire center as non-impaired, such wire center did not meet the FCC's non-impairment criteria, then upon request of Access Point, BellSouth shall transition to UNEs any alternative services in such wire center that were established after such wire center was designated as non-impaired. In such instances, BellSouth shall refund Access Point the difference between the rate paid by Access Point for such services and the applicable UNE rate, including but not limited to any charges associated with the unnecessary conversion from UNE to other wholesale services.

5. 2-wire or 4-wire HDSL-Compatible Loop. This is a designed Loop which meets Carrier Serving Area (CSA) specifications, may be up to 12,000 feet long and may have up to 2,500 feet of bridged tap (inclusive of Loop length). It may be a 2-wire or 4-wire circuit and will come standard with a test point, OC, and a DLR.

6. 4-wire Unbundled DS1 Digital Loop. This is a designed 4-wire Loop that is provisioned according to industry standards for DS1 or Primary Rate ISDN services and will come standard with a test point, OC, and a DLR. A DS1 Loop may be provisioned over a variety of loop transmission technologies including copper, HDSL-based technology or fiber optic transport systems. It will include a 4-wire DS1 Network Interface at the End User's location. For purposes of this Agreement, including the transition of DS1 and DS3 Loops described in Section 1 above, DS1 Loops include 2-wire and 4-wire HDSL-Compatible Loops.

7. Except to the extent expressly provided otherwise in this Attachment, Access Point may not maintain unbundled network elements or combinations of unbundled network elements, that are no longer offered pursuant to this Amendment (collectively "Arrangements"). In the event BellSouth determines that Access Point has in place any Arrangements after the Effective Date of this Amendment, BellSouth will provide Access Point with written notice that such Arrangements must be converted or disconnected within thirty (30) days of the receipt of such notice. The written notice provided by BellSouth must identify, by circuit identification number(s), the specific Arrangement(s) which BellSouth insists must be converted or disconnected. Those circuits identified by Access Point within such thirty (30) day period shall be converted subject to Commission-approved switch-as-is rates with no UNE disconnect charges. If Access Point fails to dispute BellSouth's claims or fails to submit orders to disconnect or convert such Arrangements within the established thirty (30)-day period, BellSouth will transition such circuits to the equivalent tariffed BellSouth service(s) subject to the Commission-established switch-as-is rate. The full nonrecurring charges for installation of the equivalent tariffed BellSouth service as set forth in BellSouth's tariffs will not apply to such conversions. However, the applicable recurring tariff charges shall apply to each circuit upon conversion.

8. Modifications and Updates to the Wire Center List and Subsequent Transition Periods

8.1 DS1 or DS3 loops, or Dedicated Transport in Wire Centers that Meet the TRRO Non-Impaired Criteria in the Future

8.2 In the event BellSouth identifies additional wire centers that meet the criteria set forth in Sections 1.2.1 (DS1 loops), 1.2.2 (DS3 loops), 2.2.1.1 (DS1 transport) and 2.2.1.2 (DS3 transport) but that were not included in the Initial Non-Impaired Wire Center List adopted by the Commission, BellSouth shall include such

additional wire centers in a carrier notification letter (CNL). Each such list of additional wire centers shall be considered a "Subsequent Wire Center List."

8.3 Effective thirty (30) calendar days after the date of a BellSouth CNL providing a Subsequent Wire Center List, BellSouth shall not be required to unbundle new DS1 or DS3 Loops, or transport, as applicable, in such additional wire center(s), except pursuant to self-certification by Access Point. BellSouth may review the self-certification claim of Access Point and seek dispute resolution through the Commission if needed. During the dispute resolution period, the applicable DS1 or DS3 loop rate will not change unless ordered by the Commission. Upon the Commission's resolution of the dispute, said rates will be trued up if necessary, to the time BellSouth provisioned in the order in question.

8.4 BellSouth shall make available de-listed DS1 and DS3 Loops and transport that were in service for Access Point in a de-listed wire center on the Subsequent Wire Center List as of the thirtieth (30th) calendar day after the date of BellSouth's CNL identifying the Subsequent Wire Center List (Subsequent Embedded Base) until one hundred and eighty (180) calendar days after the thirtieth (30th) calendar day from the date of BellSouth's CNL identifying the Subsequent Wire Center List (Subsequent Transition Period).

8.5 Subsequent disconnects and/or lost End Users shall be removed from the Subsequent Embedded Base.

8.6 The rate that shall apply to the Subsequent Embedded Base throughout the entire Subsequent Transition Period shall be the rate paid for that element at the time of the CNL posting, plus 15%.

8.7 No later than one hundred and eighty (180) calendar days from BellSouth's CNL identifying the Subsequent Wire Center List, Access Point shall submit a spreadsheet(s) identifying the Subsequent Embedded Base of circuits to be disconnected or converted to other BellSouth services. For Conversions as defined in Section 12, such spreadsheets shall take the place of an LSR or ASR. The Parties shall negotiate a project schedule for the Conversion of the Subsequent Embedded Base of circuits. If a Access Point chooses to convert the de-listed DS1 and DS3 Loops and Transport to special access circuits, BellSouth will include such de-listed DS1 and DS3 Loops and Transport once converted within Access Point's total special access circuits and apply any discounts to which Access Point is entitled. The Parties shall negotiate a project schedule for the Conversion of the Subsequent Embedded Base.

8.7.1 If Access Point submits the spreadsheet(s) for its Subsequent Embedded Base by one hundred and eighty (180) calendar days from BellSouth's CNL identifying the Subsequent Wire Center List, those identified circuits shall be subject to the Commission-approved switch-as-is conversion nonrecurring charge.

8.7.2 If Access Point fails to submit the spreadsheet(s) for all of its Subsequent Embedded Base by one hundred and eighty (180) calendar days after the date of BellSouth's CNL identifying the Subsequent Wire Center List, BellSouth will identify Access Point's remaining Subsequent Embedded Base, if any, and will transition such circuits to the equivalent tariffed BellSouth service(s) subject to the switch-as-is rate established by the Commission.

8.7.3 For Subsequent Embedded Base circuits converted or transitioned, the applicable recurring tariff charges shall apply on the first day after the end of the Subsequent Transition Period. The transition of the Subsequent Embedded Base circuits should be performed in a manner that avoids, or otherwise minimizes to the extent possible, disruption or degradation to Access Point's customers' service.

8.8 Dark Fiber Transport in Wire Centers that Meet the TRRO Non-Impaired Criteria in the Future

8.8.1 In the event BellSouth identifies additional wire centers that meet the criteria set forth in Section 2.3.2 above, but that were not included in the Initial Non-Impaired Wire Center List adopted by the Commission, BellSouth shall include such additional wire centers in a CNL. Each such list of additional wire centers shall be considered a "Subsequent Wire Center List."

8.8.2 Effective thirty (30) calendar days after the date of a BellSouth CNL providing a Subsequent Wire Center List, BellSouth shall not be required to unbundle new Dark Fiber Transport, as applicable, in such additional wire center(s), except pursuant to the self-certification process by Access Point. BellSouth may review the self-certification claim of Access Point and seek dispute resolution through the Commission if needed. During the dispute resolution period, the applicable DS1 or DS3 loop rate will not change unless ordered by the Commission. Upon the Commission's resolution of the dispute, said rates will be trued up if necessary, to the time BellSouth provisioned in the order in question.

8.8.3 For purposes of Section 8.8, BellSouth shall make available dark fiber transport that was in service for Access Point in a wire center on the Subsequent Wire Center List as of the thirtieth (30th) calendar day after the date of BellSouth's CNL identifying the Subsequent Wire Center List (Subsequent Embedded Base) until two hundred and seventy (270) calendar days after the thirtieth (30th) calendar day from the date of BellSouth's CNL identifying the Subsequent Wire Center List (Subsequent Transition Period).

8.8.4 Subsequent disconnects and/or lost End Users shall be removed from the Subsequent Embedded Base.

8.8.5 The rate that shall apply to the Subsequent Embedded Base throughout the entire Subsequent Transition Period shall be the rate paid for that element at the time of the CNL posting, plus 15%.

8.8.6 No later than two hundred and seventy (270) calendar days from BellSouth's CNL identifying the Subsequent Wire Center List Access Point shall submit a spreadsheet(s) identifying the Subsequent Embedded Base of circuits to be disconnected or converted to other BellSouth services. For Conversions as defined in Section 12, such spreadsheets shall take the place of an LSR or ASR. The Parties shall negotiate a project schedule for the Conversion of the Subsequent Embedded Base of circuits. If a Access Point chooses to convert the Dark Fiber Transport to special access circuits, BellSouth will include such Dark Fiber Transport once converted within Access Point's total special access circuits and apply any discounts to which Access Point is entitled. The Parties shall negotiate a project schedule for the Conversion of the Subsequent Embedded Base.

8.8.6.1 If Access Point submits the spreadsheet(s) for its Subsequent Embedded Base within two hundred and seventy (270) calendar days from BellSouth's CNL identifying the Subsequent Wire Center List, those identified circuits shall be subject to the Commission-approved switch-as-is charge.

8.8.6.2 If Access Point fails to submit the spreadsheet(s) for all of its Subsequent Embedded Base within two hundred and seventy (270) calendar days after the date of BellSouth's CNL identifying the Subsequent Wire Center List, BellSouth will identify Access Point's remaining Subsequent Embedded Base, if any, and will transition such circuits to the equivalent tariffed BellSouth service(s) subject to the switch-as-is charge established by the Commission.

8.8.7 For Subsequent Embedded Base circuits converted or transitioned, the applicable recurring tariff charges shall apply on the first day after the end of the Subsequent Transition Period. The transition of the Subsequent Embedded Base circuits should be performed in a manner that avoids, or otherwise, minimizes to the extent possible, disruption or degradation to Access Point's customers' service.

9. <u>Issue 13</u> – Should network elements de-listed under §251(c) (3) be removed from BellSouth's SQM/PMAP/SEEM?

9.1 Access Point may purchase and use Network Elements and Other Services from BellSouth in accordance with 47 C.F.R §51.309. Performance Measurements associated with this Attachment 2 are contained in Attachment 9. The quality of the Network Elements provided pursuant to §251, as well as the quality of the access to said Network Elements that BellSouth provides to Access Point, shall

be, to the extent technically feasible, at least equal to that which BellSouth provides to itself, and its affiliates.

9.2 The Parties shall comply with the requirements as set forth in the technical references within this Attachment 2. BellSouth shall comply with the requirements set forth in the technical reference TR73400, as well as any performance or other requirements identified in this Agreement, to the extent that they are consistent with the greater of BellSouth's actual performance or applicable industry standards. If one or more of the requirements set forth in this Agreement are in conflict, the technical reference TR73600 requirements shall apply. If the parties cannot reach agreement, the dispute resolution process set forth in the General Terms and Conditions of this Agreement shall apply.

10. Commingling of Services

10.1 Commingling means the connecting, attaching, or otherwise linking of a Network Element, or a Combination, to one or more Telecommunications Services or facilities that Access Point has obtained at wholesale from BellSouth, or the combining of a Network Element or Combination with one or more such wholesale Telecommunications Services or facilities. The wholesale services that can be commingled with Network Elements or a Combination include network elements required to be unbundled under Section 271. Access Point must comply with all rates, terms or conditions applicable to such wholesale Telecommunications Services or facilities.

10.2 Subject to the limitations set forth elsewhere in this Attachment, BellSouth shall not deny access to a Network Element or a Combination on the grounds that one or more of the elements: 1) is connected to, attached to, linked to, or combined with such a facility or service obtained from BellSouth; or 2) shares part of BellSouth's network with access services or inputs for mobile wireless services and/or interexchange services.

10.3 Unless expressly prohibited by the terms of this Attachment, BellSouth shall permit Access Point to Commingle an Unbundled Network Element or a Combination of unbundled Network Elements with wholesale services obtained from BellSouth, services obtained from third parties or facilities provided by Access Point. For purposes of example only, Access Point may Commingle unbundled Network Elements or Combinations of unbundled Network Elements with wholesale services including switched and special access services, or services purchased under resale arrangements with BellSouth.

10.4 Unless otherwise agreed to by the Parties, the Network Element portion of a commingled circuit will be billed at the rates set forth in Exhibit B and the remainder of the circuit or service will be billed in accordance with BellSouth's tariffed rates or rates set forth by separate agreement.

10.5 When multiplexing equipment is attached to a commingled arrangement, the multiplexing equipment will be billed from the same agreement or the tariff as the higher bandwidth circuit. Central Office Channel Interfaces (COCI) will be billed from the same agreement or tariff as the lower bandwidth circuit.

10.6 Terms and conditions for order cancellation charges and Service Date Advancement Charges will apply in accordance with Attachment 2. The charges shall be as se forth in Exhibit_ of Attachment _ of the parties Agreement.

11. **<u>Issue 15</u> – Is BellSouth required to provide conversion of special access circuits to UNE pricing, and, if so, what rates, terms and conditions and during what timeframe should such new requests for such conversions be effectuated?**

12. <u>Conversion of Wholesale Services to Network Elements or Network Elements to Wholesale Services</u>

12.1 Upon request, BellSouth shall convert a wholesale service, or group of wholesale services, to the equivalent Network Element or Combination that is available to Access Point pursuant to Section 251 of the Act and under this Agreement, or convert a Network Element or Combination that is available to Access Point pursuant to Section 251 of the Act and under this Agreement to an equivalent wholesale service or group of wholesale services offered by BellSouth (collectively "Conversion"). BellSouth shall charge the applicable nonrecurring

Commission approved switch-as-is rates for Conversions to specific Network Elements or Combinations found in Exhibit B. BellSouth shall also charge the same nonrecurring switch-as-is rates when converting from Network Elements or Combinations. Any rate change resulting from the Conversion will be effective as of the next billing cycle following BellSouth's receipt of a complete and accurate Conversion request from Access Point. Any change from a wholesale service/group of wholesale services to a Network Element/Combination, or from a Network Element/Combination to a wholesale service/group of wholesale services that requires a physical rearrangement will not be considered to be a Conversion for purposes of this Agreement. BellSouth will not require physical rearrangements if the Conversion can be completed through record changes only. Orders for Conversions will be handled in accordance with the guidelines set forth in the Ordering Guidelines and Processes and CLEC Information Packages as referenced in Section 12.3 below.

12.2 Any outstanding conversions shall be effective on or after the effective date of this agreement.

12.3 Ordering Guidelines and Processes

12.3.1 For information regarding Ordering Guidelines and Processes for various Network Elements, Combinations and Other Services, Access Point should refer to the "Guides" section of the BellSouth Interconnection Web site.

12.3.2 Additional information may also be found in the individual CLEC Information Packages located at the "CLEC UNE Products" on BellSouth's Interconnection Web site.

12.3.3 The provisioning of Network Elements, Combinations and Other Services to Access Point's Collocation Space will require cross-connections within the central office to connect the Network Element, Combinations or Other Services to the demarcation point associated with Access Point's Collocation Space. These cross-connects are separate components that are not considered a part of the Network Element, Combinations or Other Services and, thus, have a separate charge pursuant to this Agreement.

13. Line Splitting

13.1 Line splitting shall mean that Access Point purchases a whole loop and provides the splitter to provide voice and data services through an arrangement with a third party CLEC, who is either the provider of data services (a Data LEC) or the provider of voice services (a Voice CLEC) to deliver voice and data service to

End Users over the same Loop. The Voice CLEC and Data LEC may be the same or different carriers.

13.2 Line Splitting – UNE-L. In the eventAccess Point provides its own switching or obtains switching from a third party, Access Point may engage in line splitting arrangements with another CLEC using a splitter, provided by Access Point, in a Collocation Space at the central office where the loop terminates into a distribution frame or its equivalent.

13.2.1 Provisioning Line Splitting and Splitter Space – UNE-L

13.2.1.1 Access Point provides the splitter when providing Line Splitting with UNE-L. When Access Point or its authorized agent owns the splitter, Line Splitting requires the following: a loop from NID at the End User's location to the serving wire center and terminating into a distribution frame or its equivalent.

13.2.1.2 An unloaded 2-wire copper Loop must serve the End User. The meet point for the Voice CLEC and the Data LEC is the point of termination on the MDF for the Data LEC's cable and pairs.

13.3 CLEC Provided Splitter – Line Splitting – UNE-L

13.3.1 To order High Frequency Spectrum on a particular Loop, Access Point or its authorized agent must have a DSLAM collocated in the central office that serves the End User of such Loop.

13.3.2 Access Point or its authorized agent may purchase, install and maintain central office POTS splitters in its collocation arrangements. Access Point or its authorized agent may use such splitters for access to its customers and to provide digital line subscriber services to its customers using the High Frequency Spectrum. Existing Collocation rules and procedures and the terms and conditions relating to Collocation set forth in Attachment 4 Central Office shall apply.

13.3.3 Any splitters installed by Access Point in its collocation arrangement shall comply with ANSI T1.413, Annex E, or any future ANSI splitter Standards. Access Point may install any splitters that BellSouth deploys or permits to be deployed for itself or any BellSouth affiliate.

13.4 Maintenance – Line Splitting – UNE-L

13.4.1 BellSouth will be responsible for repairing voice troubles and the troubles with the physical loop between the NID at the End User's premises and the termination point.

13.4.2 BellSouth must make all necessary network modifications, including providing nondiscriminatory access to operations support systems necessary for pre-ordering, ordering provisioning, maintenance and repair, and billing for loops used in line splitting arrangements. BellSouth may use existing state commission collaboratives and change management processes to address OSS modifications that are necessary.

13.5 Indemnification

13.5.1 Access Point shall indemnify, defend and hold harmless BellSouth from and against any claims, losses, and costs which arise out of actions related to the other service provider (i.e. CLEC party to the line splitting arrangement who is not Access Point), except to the extent caused by BellSouth's gross negligence or willful misconduct.

13.5.2 PROVIDED, HOWEVER, that all amounts advanced in respect of such claims, losses and costs shall be repaid to Access Point by BellSouth if it shall ultimately be determined in a final judgment without further appeal by a court of appropriate jurisdiction that BellSouth is not entitled to be indemnified for such claims, losses and costs because the Claims, Losses and Costs arose as a result of BellSouth's gross negligence or willful misconduct.

13.5.3 BellSouth will indemnify, defend and hold harmless Access Point from and against any Claims, Losses and Costs which arise out of actions related to the other service provider (i.e. CLEC party to the line splitting arrangement who is not Access Point brought against Access Point to the extent such Claim alleges that the cause of the Claim, Loss and Cost was the result of BellSouth's gross negligence or willful misconduct.

13.5.4 PROVIDED, HOWEVER, that BellSouth shall have no obligation to indemnify Access Point under this section unless Access Point provides BellSouth with prompt written notice of any such Claim; Access Point permits BellSout to assume and control the defense to such action, with counsel chosen by BellSouth; and BellSouth does not enter into any settlement or compromise of such Claim.

13.5.5 PROVIDED, HOWEVER, that all amounts advanced in respect of such Claims, Losses and Costs shall be repaid to BellSouth by Access Point if it shall ultimately be determined in a final judgment without further appeal by a court of appropriate jurisdiction that Access Point is not entitled to be indemnified for such Claims,

Losses and Costs because the Claims, Losses and Costs did not arises as a result of BellSouth's gross negligence or willful misconduct.

13.5.6 "Claim" means any threatened, pending or completed action, suit or proceeding, or any inquiry or investigation that BellSouth or Access Point in good faith believes might lead to the institution of any such action, suit or proceeding.

13.5.7 "Loss" means any and all damages, injuries, judgments, fines penalties, amounts paid or payable in settlement, deficiencies, and expenses (including all interest, assessments, and other charges paid or payable in connection with or respect of such Losses) incurred in connection with the Claim.

13.5.8 "Costs" means all reasonable attorney's fees and all other reasonable fees, expenses and obligations paid or incurred in connection with the Claim or related matters, including without limitation, investigating, defending, or participating (as a party, witness or otherwise) in (including on appeal), or preparing to defend or participate in any Claim.

14. 911 and E911 Databases

14.1 BellSouth shall provide Access Point with nondiscriminatory access to 911 and E911 databases on an unbundled basis, in accordance with 47 C.F.R. § 51.319 (f).

14.2 The ALI/DMS database contains End User information (including name, address, telephone information, and sometimes special information from the local service provider or End User) used to determine to which PSAP to route the call. The ALI/DMS database is used to provide enhanced routing flexibility for E911. Access Point will be required to provide the BellSouth 911 database vendor daily service order updates to E911 database in accordance with Section 14.3.1 below.

14.3 Technical Requirements

14.3.1 BellSouth's 911 database vendor shall provide Access Point the capability of providing updates to the ALI/DMS database through a specified electronic interface. Access Point shall contact BellSouth's 911 database vendor directly to request interface. Access Point shall provide updates directly to BellSouth's 911 database vendor on a daily basis. Updates shall be the responsibility of Access

Point and BellSouth shall not be liable for the transactions between Access Point and BellSouth's 911 database vendor.

14.3.2 It is Access Point's responsibility to retrieve and confirm statistical data and to correct errors obtained from BellSouth's 911 database vendor on a daily basis. All errors will be assigned a unique error code and the description of the error and the corrective action is described in the CLEC Users Guide for Facility Based Providers that is found on the BellSouth Interconnection Web site.

14.3.3 Access Point shall conform to the BellSouth standards as described in the CLEC Users Guide to E911 for Facilities Based Providers that is located on the BellSouth's Interconnection Web site.

14.3.4 Stranded Unlocks are defined as End User records in BellSouth's ALI/DMS database that have not been migrated for over ninety (90) days to Access Point, as a new provider of local service to the End User. Stranded Unlocks are those End User records that have been "unlocked" by the previous local exchange carrier that provided service to the End User and are open for Access Point to assume responsibility for such records.

14.3.5 Based upon End User record ownership information available in the NPAC database, BellSouth shall provide a Stranded Unlock annual report to Access Point that reflects all Stranded Unlocks that remain in the ALI/DMS database for over ninety (90) days. Access Point shall review the Stranded Unlock report, identify its End User records and request to either delete such records or migrate the records to Access Point within two (2) months following the date of the Stranded Unlock report provided by BellSouth. Access Point shall reimburse BellSouth for any charges BellSouth's database vendor imposes on BellSouth for the deletion of Access Point's records.

15. 911 PBX Locate Service®. 911 PBX Locate Service is comprised of a database capability and a separate transport component.

15.1 Description of Product. The transport component provides a dedicated trunk path from a Private Branch Exchange (PBX) switch to the appropriate BellSouth 911 tandem.

15.2 The database capability allows Access Point to offer an E911 service to its PBX End Users that identifies to the PSAP the physical location of the Access Point PBX 911 End User station telephone number for the 911 call that is placed by the End User.

15.3 Access Point may order either the database capability or the transport component as desired or Access Point may order both components of the service.

15.4 911 PBX Locate Database Capability. Access Point's End User or Access Point's End User's database management agent (DMA) must provide the End User PBX station telephone numbers and corresponding address and location data to BellSouth's 911 database vendor. The data will be loaded and maintained in BellSouth's ALI database.

15.5 Ordering, provisioning, testing and maintenance shall be provided by Access Point pursuant to the 911 PBX Locate Marketing Service Description (MSD) that is located on the BellSouth Interconnection Web site.

15.6 Access Point's End User, or Access Point's End User database management agent must provide ongoing updates to BellSouth's 911 database vendor within a commercially reasonable timeframe of all PBX station telephone number adds, moves and deletions. It will be the responsibility of Access Point to ensure that the End User or DMA maintain the data pertaining to each End User's extension managed by the 911 PBX Locate Service product. Access Point should not submit telephone number updates for specific PBX station telephone numbers that are submitted by Access Point's End User, or Access Point's End User DMA under the terms of 911 PBX Locate product.

15.7 Access Point must provision all PBX station numbers in the same LATA as the E911 tandem.

15.8 Access Point agrees to release, indemnify, defend and hold harmless BellSouth from any and all loss, claims, demands, suits, or other action, or any liability whatsoever, whether suffered, made, instituted or asserted by Access Point's End User or by any other party or person, for any personal injury to or death of any person or persons, or for any loss, damage or destruction of any property, whether owned by Access Point or others, or for any infringement or invasion of the right

of privacy of any person or persons, caused or claimed to have been caused, directly or indirectly, by the installation, operation, failure to operate, maintenance, removal, presence, condition, location or use of PBX Locate Service features or by any services which are or may be furnished by BellSouth in connection therewith, including but not limited to the identification of the telephone number, address or name associated with the telephone used by the party or parties accessing 911 services using 911 PBX Locate Service hereunder, except to the extent caused by BellSouth's gross negligence or willful misconduct. Access Point is responsible for assuring that its authorized End Users comply with the provisions of these terms and that unauthorized persons do not gain access to or use the 911 PBX Locate Service through user names, passwords, or other identifiers assigned to Access Point's End User or DMA pursuant to these terms. Specifically, Access Point's End User or DMA must keep and protect from use by any unauthorized individual identifiers, passwords, and any other security token(s) and devices that are provided for access to this product.

15.9 Access Point may only use BellSouth PBX Locate Service solely for the purpose of validating and correcting 911 related data for Access Point's End Users' telephone numbers for which it has direct management authority.

15.10 911 PBX Locate Transport Component. The 911 PBX Locate Service transport component requires Access Point to order a CAMA type dedicated trunk from Access Point's End User premise to the appropriate BellSouth 911 tandem pursuant to the following provisions.

15.11 Except as otherwise set forth below, a minimum of two (2) End User specific, dedicated 911 trunks are required between the Access Point's End User premise and the BellSouth 911 tandem as described in BellSouth's Technical Reference (TR) 73576 and in accordance with the 911 PBX Locate Marketing Service Description located on the BellSouth Interconnection Web site. Access Point is responsible for connectivity between the End User's PBX and Access Point's switch or POP location. Access Point will then order 911 trunks from their switch or POP location to the BellSouth 911 tandem. The dedicated trunks shall be, at a minimum, DS0 level trunks configured as part of a digital interface (delivered over a Access Point purchased DS1 facility that hands off at a DS1 or higher level digital or optical interface). Access Point is responsible for ensuring that the PBX switch is capable of sending the calling station's Direct Inward Dial (DID) telephone number to the BellSouth 911 tandem in a specified Multi-frequency (MF) Address Signaling Protocol. If the PBX switch supports Primary Rate ISDN (PRI) and the calling stations are DID numbers, then the 911 call can be

transmitted using PRI, and there will be no requirement for the PBX Locate Transport component.

15.12 Ordering and Provisioning. Access Point will submit an Access Service Request (ASR) to BellSouth to order a minimum of two (2) End User specific 911 trunks from its switch or POP location to the BellSouth 911 tandem.

15.13 Testing and maintenance shall be provided by Access Point pursuant to the 911 PBX Locate Marketing Service description that is located on the BellSouth Interconnection Web site.

15.14 Rates. Rates for the 911 PBX Locate Service database component are set forth in Exhibit C. Trunks and facilities for 911 PBX Locate transport component may be ordered by Access Point pursuant to the terms and conditions set forth in Attachment __ of the Agreement.

16. Fiber to the Home (FTTH) loops are local loops consisting entirely of fiber optic cable, whether dark or lit, serving an End User's premises or, in the case of predominantly residential multiple dwelling units (MDUs), a fiber optic cable, whether dark or lit, that extends to the MDU minimum point of entry (MPOE).

17. Fiber to the Curb (FTTC) loops are local loops consisting of fiber optic cable connecting to a copper distribution plant that is not more than five hundred (500) feet from the End User's premises or, in the case of predominantly residential MDUs, not more than five hundred (500) feet from the MDU's MPOE. The fiber optic cable in a FTTC loop must connect to a copper distribution plant at a serving area interface from which every other copper distribution subloop also is not more than five hundred (500) feet from the respective End User's premises.

18. Greenfield Requirements: In new build (Greenfield) areas, where BellSouth has only deployed FTTH/FTTC facilities, BellSouth is under no obligation to provide such FTTH and FTTC Loops. FTTH facilities include fiber loops deployed to the MPOE of a MDU that is predominately residential regardless of the ownership of the inside wiring from the MPOE to each End User in the MDU.

18.1 Overbuild Requirements: In FTTH/FTTC overbuild situations where Bellsouth also has copper loops, BellSouth will make those copper loops available to CLEC on an unbundled basis, until such time as BellSouth chooses to retire those copper loops using the FCC's network disclosure requirements. In these cases, BellSouth will offer a 64 Kbps second voice grade channel over its FTTH/FTTC facilities. BellSouth's retirement of copper loops must comply with Applicable Law.

18.2 DS1/DS3 Requirements: Notwithstanding the above, nothing in this Section shall limit BellSouth's obligation to offer CLECs unbundled DS1 and DS3 loops (or loop/transport combination) in any wire center where BellSouth is required to provide such loop facilities.

18.3 Subloops: BellSouth shall provide Access Point with nondiscriminatory access to the subloop for access to multiunit premises wiring on an unbundled basis regardless of the capacity level or type of loop that the Access Point seeks to provision for its customer. The subloop for access to multiunit premises wiring is defined as any portion of the loop that it is technically feasible to access at a terminal in the incumbent LEC's outside plant at or near a multiunit premises. One category of this subloop is inside wire, which is defined for purposes of this section as all loop plant owned or controlled by the incumbent LEC at a multiunit customer premises between the minimum point of entry as defined in §68.105 of the FCC rules and the point of demarcation of the incumbent LEC's network as defined in § 68.3 of the FCC rules.

18.4 Upon notification by a requesting telecommunications carrier that it requests interconnection at a multiunit premises where BellSouth owns controls or leases wiring, BellSouth shall provide a single point of interconnection that is suitable for use by multiple carriers.

19. **Issue 24: What is the appropriate ICA language to implement BellSouth's obligation to provide unbundled access to hybrid loops?**

19.1 Hybrid loops are defined in the federal rules at 47 CFR §51.319(a)(2) as local loops, composed of both fiber optic cable, usually in the feeder plant, and copper twisted wire or cable, usually in the distribution plant. BellSouth shall provide Access Pointwith nondiscriminatory access to the time division multiplexing features, functions and capabilities of such hybrid loop, including DS1 and DS3 capacity under Section 251 where impairment exists, on an unbundled basis to establish a complete transmission path between BellSouth's central office and an End User's premises.

19.2 BellSouth shall not engineer the transmission capabilities of its network in a manner, or engage in any policy, practice, or procedure, that disrupts or degrades access to a local loop or subloop, including the time division multiplexing-based features, functions, and capabilities of a hybrid loop, for which a requesting telecommunications carrier may obtain or has obtained access pursuant to this Attachment.

20. Routine Network Modifications

20.1 BellSouth will perform Routine Network Modifications (RNM) in accordance with FCC 47 CFR 51.319 (a)(7) and (e)(4) for Loops and Dedicated Transport provided under this Attachment. If BellSouth normally provides such RNM for its own customers and has recovered the costs for performing such modifications through the rates set forth in Exhibit __ Attachment _ of the Agreement, then BellSouth will perform such RNM at no additional charge. A routine network modification is an activity that BellSouth regularly undertakes for its own customers. Routine network modifications include, but are not limited to, rearranging or splicing of cable; adding an equipment case; adding a doubler or repeater; adding a smart jack; installing a repeater shelf; adding a line card; and deploying a new multiplexer or reconfiguring an existing multiplexer. Routine network modifications may entail activities such as accessing manholes, deploying bucket trucks to reach aerial cable, and installing equipment casings. Routine network modifications do not include the construction of a new loop, or the installation of new aerial or buried cable for a CLEC.

20.2 Rates: BellSouth will provide for Access Point at no additional charge, all RNM which BellSouth normall provides for its own customers and for which BellSouth recovers its costs through the rates set forth in Exhibit __ Attachment _ of the Agreement. BellSouth will otherwise perform Routine Network Modifications pursuant to the existing non-recurring charges and recurring rates ordered by the Alabama Public Service Commission for loop and transport facilities as set forth in Exhibit __ Attachment _ of the Agreement. For any RNM performed by BellSouth for which BellSouth alleges that its costs are not recovered through existing rates, BellSouth shall immediately petition the Commission to establish a permanent rate. The Commission will establish interim rates for such RNM that will be subject to true-up upon the establishment of a final rate.

20.3 If BellSouth does not normally provide a network modification requested by Access Point for BellSouth customers, and does not recover the costs of the network modifications requested in the rates set forth in Exhibit __ Attachment _

of the Agreement, then such request will be handled as a project on an individual case basis ("ICB"). BellSouth will provide a price quote for the request and, upon receipt of payment from Access Point, BellSouth will perform the network modification.

20.4 RNM will be performed within the intervals established for the Network Element and subject to the performance measurements and associated remedies set forth in Attachment 9 of this Agreement. Either BellSouth or Access Point may seek resolution of any dispute regarding the classification of a network modification as routine or non-routine from the Commission.

21. Line Conditioning

21.1 Definitions: Line Conditioning is defined as the removal from a copper Loop or copper Subloop of any device that could diminish the capability of the Loop or Subloop to deliver high-speed switched wireline telecommunications capability, including digital subscriber line service. Such devices include, but are not limited to, bridged taps, load coils, low pass filters, and range extenders. Excessive bridged taps are bridged taps that serve no network design purpose and that are beyond the limits set according to industry standards and/or the BellSouth's TR 73600 Unbundled Local Loop Technical Specification.

21.2 Rates: BellSouth shall perform line conditioning pursuant to the non-recurring rates and provisions ordered by the Alabama Public Service Commission in Docket 27821 which provides that BellSouth shall perform loop conditioning for loops less than 18,000 feet at no cost. Such rates were established pursuant to the Federal Communications Commission's forward-looking principles promulgated pursuant to Section 252 (d)(1) of the Act and in compliance with rules governing non-recurring costs in 47 CFR 51.507(e).

21.3 Technical Requirements: BellSouth shall condition Loops, as requested by Access Point, whether or not BellSouth offers advanced services to the End User on that Loop.

21.4 In some instances, Access Point will require access to a copper twisted pair loop unfettered by any intervening equipment (e.g. fibers, load coils, range extenders, etc.), so that Access Point can use the loop for a variety of services by attaching appropriate terminal equipment at the ends. Access Point will determine the type of service that will be provided over the loop.

21.5 In those cases where Access Point has requested that BellSouth modify a loop so that it no longer meets the technical parameters of the original loop type (e.g. voice grade, ISDN, ADSL, etc.) the resulting modified Loop will be ordered and maintained as a UCL. BellSouth shall provide the following: 1) removal of devices on 2-wire or 4-wire loops equal to or less than 18,000 feet at no additional cost, 2) removal of devices on 2-wire or 4-wire loops longer than 18,000 feet; and 3) removal of bridged-taps on loops of any length at rates established in APSC Docket 27821. (The specific non-recurring and recurring charges shall apply for each element ordered.)

21.6 Access Point shall request Loop make-up information pursuant to this Attachment prior to submitting a service inquiry and/or a LSR for the Loop type that Access Point desires BellSouth to condition.

22. <u>EELs Audit provisions</u>

22.1 BellSouth may audit Access Point's records in order to verify compliance with the high capacity EEL eligibility criteria. To invoke its limited right to audit, BellSouth shall send a written Notice of Audit to Access Point. Such Notice of Audit will be delivered to Access Point no less than thirty (30) calendar days prior to the date upon which BellSouth seeks to commence an audit and shall set forth the reasons for the audit requested and the identity of the auditor selected by BellSouth. BellSouth shall not be required to obtain the consent of Access Point with respect to the selection of the auditor. Access Point may, however, challenge the legal qualifications of the auditor selected by filing an objection to that effect with the Commission within 10 days of receiving BellSouth's Notice of Audit.

22.2 The auditor selected shall be an independent third party retained and paid for by BellSouth. The audit must be performed in accordance with the standards established by the American Institute for Certified Public Accountants (AICPA) which will require the auditor to perform an "examination engagement" and issue an opinion regarding Access Point's compliance with the high capacity EEL eligibility criteria. AICPA standards and other AICPA requirements will be used to determine the independence of an auditor. The independent auditor's report will conclude whether Access Point complied in all material respects with the

applicable service eligibility criteria. Consistent with standard auditing practices, such audits require compliance testing designed by the independent auditor.

22.3 To the extent the independent auditor's report concludes that Access Point failed to comply with the service eligibility criteria, Access Point must true-up any difference in payments, convert all noncompliant circuits to the appropriate service, and make the correct payments on a going forward basis.

22.4 To the extent the independent auditor's report concludes that Access Point failed to comply in all material respects with the service eligibility criteria, Access Point shall reimburse BellSouth for the cost of the independent auditor. To the extent the independent auditor's report concludes that Access Point did comply in all material respects with the service eligibility criteria, BellSouth will reimburse Access Point for its reasonable and demonstrable costs associated with the audit. Access Point will maintain appropriate documentation to support its certifications and may dispute any portion of the findings of an audit by petitioning the Commission for a review within 20 days of receiving the reported findings of the auditor.

23. Access Point shall not obtain a Network Element for the exclusive provision of mobile wireless services or interexchange services.

24. Facilities that do not terminate at a demarcation point at an End User premises, including, by way of example, but not limited to, facilities that terminate to another carrier's switch or premises, a cell site, Mobile Switching Center or base station, do not constitute local Loops under Section 251, except to the extent that Access Point may require Loops to such locations for the purpose of providing telecommunications services to its personnel at those locations.

25. Subloop Elements.

25.1 Where facilities permit, BellSouth shall offer access to its Unbundled Subloop (USL) elements as specified herein.

25.2 Unbundled Subloop Distribution (USLD)

25.2.1 The USLD facility is a dedicated transmission facility that BellSouth provides from an End User's point of demarcation to a BellSouth cross-connect device. The BellSouth cross-connect device may be located within a remote terminal (RT) or a stand-alone cross-box in the field or in the equipment room of a building. The USLD media is a copper twisted pair that can be provisioned as a 2-wire or 4-wire facility. BellSouth will make available the following subloop distribution offerings where facilities exist:

USLD – Voice Grade (USLD-VG)
Unbundled Copper Subloop (UCSL)
USLD – Intrabuilding Network Cable (USLD-INC (aka riser cable))

25.2.2 USLD-VG is a copper subloop facility from the cross-box in the field up to and including the point of demarcation at the End User's premises and may have load coils.

25.2.3 UCSL is a copper facility eighteen thousand (18,000) feet or less in length provided from the cross-box in the field up to and including the End User's point of demarcation. If available, this facility will not have any intervening equipment such as load coils between the End User and the cross-box.

25.2.4 If Access Point requests a UCSL and it is not available, Access Point may request the copper Subloop facility be modified pursuant to the ULM process to remove load coils and/or excessive bridged taps. If load coils and/or excessive bridged taps are removed, the facility will be classified as a UCSL.

25.2.5 USLD-INC is the distribution facility owned or controlled by BellSouth inside a building or between buildings on the same property that is not separated by a public street or road. USLD-INC includes the facility from the cross-connect device in the building equipment room up to and including the point of demarcation at the End User's premises.

25.2.6 Upon request for USLD-INC from Access Point, BellSouth will install a cross-connect panel in the building equipment room for the purpose of accessing USLD-INC pairs from a building equipment room. The cross-connect panel will function as a single point of interconnection (SPOI) for USLD-INC and will be accessible by multiple carriers as space permits. BellSouth will place cross-

connect blocks in twenty five (25) pair increments for Access Point's use on this cross-connect panel. Access Point will be responsible for connecting its facilities to the twenty five (25) pair cross-connect block(s).

25.2.7 For access to Voice Grade USLD and UCSL, Access Point shall install a cable to the BellSouth cross-box pursuant to the terms and conditions for physical collocation for remote sites set forth in Attachment 4. This cable would be connected by a BellSouth technician within the BellSouth cross-box during the set-up process. Access Point's cable pairs can then be connected to BellSouth's USL within the BellSouth cross-box by the BellSouth technician.

25.2.8 Through the SI process, BellSouth will determine whether access to USLs at the location requested by Access Point is technically feasible and whether sufficient capacity exists in the cross-box. If existing capacity is sufficient to meet Access Point's request, then BellSouth will perform the site set-up as described in the CLEC Information Package, located at BellSouth's Interconnection Web site: www.interconnection.bellsouth.com/products/html/unes.html.

25.2.9 The site set-up must be completed before Access Point can order Subloop pairs. For the site set-up in a BellSouth cross-connect box in the field, BellSouth will perform the necessary work to splice Access Point's cable into the cross-connect box. For the site set-up inside a building equipment room, BellSouth will perform the necessary work to install the cross-connect panel and the connecting block(s) that will be used to provide access to the requested USLs.

25.2.10 Once the site set-up is complete, Access Point will request Subloop pairs through submission of a LSR form to the LCSC. OC is required with USL pair provisioning when Access Point requests reuse of an existing facility, and the OC charge shall be billed in addition to the USL pair rate. For expedite requests by Access Point for Subloop pairs, expedite charges will apply for intervals less than five (5) days.

25.2.11 USLs will be provided in accordance with BellSouth's TR73600 Unbundled Local Loop Technical Specifications.

25.3 <u>Unbundled Network Terminating Wire (UNTW)</u>

25.3.1 UNTW is unshielded twisted copper wiring that is used to extend circuits from an intra-building network cable terminal or from a building entrance terminal to an individual End User's point of demarcation. It is the final portion of the Loop that in multi-subscriber configurations represents the point at which the network branches out to serve individual subscribers.

25.3.2 This element will be provided in MDUs and/or Multi-Tenants Units (MTUs) where either Party owns wiring all the way to the End User's premises. Neither

Party will provide this element in locations where the property owner provides its own wiring to the End User's premises, where a third party owns the wiring to the End User's premises.

25.3.3 Requirements

25.3.3.1 On a multi-unit premises, upon request of the other Party (Requesting Party), the Party owning the network terminating wire (Provisioning Party) will provide access to UNTW pairs on an Access Terminal that is suitable for use by multiple carriers at each Garden Terminal or Wiring Closet.

25.3.3.2 The Provisioning Party shall not be required to install new or additional NTW beyond existing NTW to provision the services of the Requesting Party.

25.3.3.3 In existing MDUs and/or MTUs in which BellSouth does not own or control wiring (INC/NTW) to the End Users premises, and Access Point does own or control such wiring, Access Point will install UNTW Access Terminals for BellSouth under the same terms and conditions as BellSouth provides UNTW Access Terminals to Access Point.

25.3.3.4 In situations in which BellSouth activates a UNTW pair, BellSouth will compensate Access Point for each pair activated commensurate to the price specified in Access Point's Agreement.

25.3.3.5 Upon receipt of the UNTW SI requesting access to the Provisioning Party's UNTW pairs at a multi-unit premises, representatives of both Parties will participate in a meeting at the site of the requested access. The purpose of the site visit will include discussion of the procedures for installation and location of the Access Terminals. By request of the Requesting Party, an Access Terminal will be installed either adjacent to each of the Provisioning Party's Garden Terminal or inside each Wiring Closet. The Requesting Party will deliver and connect its central office facilities to the UNTW pairs within the Access Terminal. The Requesting Party may access any available pair on an Access Terminal. A pair is available when a pair is not being utilized to provide service or where the End User has requested a change in its local service provider to the Requesting Party. Prior to connecting the Requesting Party's service on a pair previously used by the Provisioning Party, the Requesting Party is responsible for ensuring the End User is no longer using the Provisioning Party's service or another CLEC's service before accessing UNTW pairs.

25.3.3.6 Access Terminal installation intervals will be established on an individual case basis.

25.3.3.7 The Requesting Party is responsible for obtaining the property owner's permission for the Provisioning Party to install an Access Terminal(s) on behalf of the

Requesting Party. The submission of the SI by the Requesting Party will serve as certification by the Requesting Party that such permission has been obtained. If the property owner objects to Access Terminal installations that are in progress or within thirty (30) days after completion and demands removal of Access Terminals, the Requesting Party will be responsible for costs associated with removing Access Terminals and restoring the property to its original state prior to Access Terminals being installed.

25.3.3.8 The Requesting Party shall indemnify and hold harmless the Provisioning Party against any claims of any kind that may arise out of the Requesting Party's failure to obtain the property owner's permission. The Requesting Party will be billed for nonrecurring and recurring charges for accessing UNTW pairs at the time the Requesting Party activates the pair(s). The Requesting Party will notify the Provisioning Party within five (5) business days of activating UNTW pairs using the LSR form.

25.3.3.9 If a trouble exists on a UNTW pair, the Requesting Party may use an alternate spare pair that serves that End User if a spare pair is available. In such cases, the Requesting Party will re-terminate its existing jumper from the defective pair to the spare pair. Alternatively, the Requesting Party will isolate and report troubles in the manner specified by the Provisioning Party. The Requesting Party must tag the UNTW pair that requires repair. If the Provisioning Party dispatches a technician on a reported trouble call and no UNTW trouble is found, the Provisioning Party will charge Requesting Party for time spent on the dispatch and testing the UNTW pair(s).

25.3.3.10 If the Requesting Party initiates the Access Terminal installation and the Requesting Party has not activated at least ten percent (10%) of the capacity of the Access Terminal installed pursuant to the Requesting Party's request for an Access Terminal within six (6) months of installation of the Access Terminal, the Provisioning Party will bill the Requesting Party a nonrecurring charge equal to the actual cost of provisioning the Access Terminal.

25.3.3.11 If the Provisioning Party determines that the Requesting Party is using the UNTW pairs without reporting the activation of the pairs, the Requesting Party will be billed for the use of that pair back to the date the End User began receiving service from the Requesting Party at that location. Upon request, the Requesting Party will provide copies of its billing record to substantiate such date. If the Requesting Party fails to provide such records, then the Provisioning Party will bill the Requesting Party back to the date of the Access Terminal installation.

UNBUNDLED NETWORK ELEMENTS - Alabama

Attachment: 2 Exh A

CATEGORY	RATE ELEMENTS	Interim	Zone	BCS	USOC	RATES($) Rec	Nonrecurring First	Nonrecurring Add'l	Nonrecurring Disconnect First	Nonrecurring Disconnect Add'l	Svc Order Submitted Elec per LSR	Svc Order Submitted Manually per LSR	Incremental Charge - Manual Svc Order vs. Electronic-1st	Incremental Charge - Manual Svc Order vs. Electronic-Add'l	Incremental Charge - Manual Svc Order vs. Electronic-Disc 1st	Incremental Charge - Manual Svc Order vs. Electronic-Disc Add'l
											OSS Rates($)					
											SOMEC	SOMAN	SOMAN	SOMAN	SOMAN	SOMAN
	The "Zone" shown in the sections for stand-alone loops or loops as part of a combination refers to Geographically Deaveraged UNE Zones. To view Geographically Deaveraged UNE Zone Designations by Central Office, refer to internet Website: http://www.interconnection.bellsouth.com/become_a_clec/html/interconnection.htm															
OPERATIONS SUPPORT SYSTEMS (OSS) - "REGIONAL RATES"																
	NOTE: (1) CLEC should contact its contract negotiator if it prefers the "state specific" OSS charges as ordered by the State Commissions. The OSS charges currently contained in this rate exhibit are the BellSouth "regional" service ordering charges. CLEC may elect either the state specific Commission ordered rates for the service ordering charges, or CLEC may elect the regional service ordering charge, however, CLEC can not obtain a mixture of the two regardless if CLEC has a interconnection contract established in each of the 9 states.															
	NOTE: (2) Any element that can be ordered electronically will be billed according to the SOMEC rate listed in this category. Please refer to BellSouth's Local Ordering Handbook (LOH) to determine if a product can be ordered electronically. For those elements that cannot be ordered electronically at present per the LOH, the listed SOMEC rate in this category reflects the charge that would be billed to a CLEC once electronic ordering capabilities come on-line for that element. Otherwise, the manual ordering charge, SOMAN, will be applied to a CLECs bill when it submits an LSR to BellSouth.															
	OSS - Electronic Service Order Charge, Per Local Service Request (LSR) - UNE Only				SOMEC		3.50	0.00	3.50	0.00						
	OSS - Manual Service Order Charge, Per Local Service Request (LSR) - UNE Only				SOMAN		15.66	0.00	1.97	0.00						
UNE SERVICE DATE ADVANCEMENT CHARGE																
	NOTE: The Expedite charge will be maintained commensurate with BellSouth's FCC No.1 Tariff, Section 5 as applicable.															
	UNE Expedite Charge per Circuit or Line Assignable USOC, per Day			UAL, UEANL, UCL, UEF, UDF, UEQ, UDL, UENTW, UDN, UEA, UHL, ULC, USL, U1T12, U1T48, U1TD1, U1TD3, U1TDX, U1TO3, U1TS1, U1TVX, UC1BC, UC1BL, UC1CC, UC1CL, UC1DC, UC1DL, UC1EC, UC1EL, UC1FC, UC1FL, UC1GC, UC1GL, UC1HC, UC1HL, UDL12, UDL48, UDLO3, UDLSX, UE3, ULD12, ULD48, ULDD1, ULDD3, ULDDX, ULDO3, ULDS1, ULDVX, UNC1X, UNC3X, UNCDX, UNCNX, UNCSX, UNCVX, UNLD1, UNLD3, UXTD1, UXTD3, UXTS1, U1TUC, U1TUD, U1TUB, U1TUA, NTCVG, NTCUD, NTCD1	SDASP		200.00									
ORDER MODIFICATION CHARGE																
	Order Modification Charge (OMC)						35.13	0.00	0.00	0.00						
	Order Modification Additional Dispatch Charge (OMCAD)						150.00	0.00	0.00	0.00						
UNBUNDLED EXCHANGE ACCESS LOOP																
	2-WIRE ANALOG VOICE GRADE LOOP															
	2-Wire Analog Voice Grade Loop - Service Level 1- Zone 1		1	UEANL	UEAL2	12.58	37.81	17.56	23.49	5.30						
	2-Wire Analog Voice Grade Loop - Service Level 1- Zone 2		2	UEANL	UEAL2	21.05	37.81	17.56	23.49	5.30						
	2-Wire Analog Voice Grade Loop - Service Level 1- Zone 3		3	UEANL	UEAL2	34.34	37.81	17.56	23.49	5.30						
	2-Wire Analog Voice Grade Loop - Service Level 1- Zone 1		1	UEANL	UEASL	12.58	37.81	17.56	23.49	5.30						
	2-Wire Analog Voice Grade Loop - Service Level 1- Zone 2		2	UEANL	UEASL	21.05	37.81	17.56	23.49	5.30						
	2-Wire Analog Voice Grade Loop - Service Level 1- Zone 3		3	UEANL	UEASL	34.34	37.81	17.56	23.49	5.30						
	Tag Loop at End User Premise			UEANL	URETL		8.93	0.88								

UNBUNDLED NETWORK ELEMENTS - Alabama														Attachment: 2 Exh A			
CATEGORY		RATE ELEMENTS	Interim	Zone	BCS	USOC	RATES($)					Svc Order Submitted Elec per LSR	Svc Order Submitted Manually per LSR	Incremental Charge - Manual Svc Order vs. Electronic-1st	Incremental Charge - Manual Svc Order vs. Electronic-Add'l	Incremental Charge - Manual Svc Order vs. Electronic-Disc 1st	Incremental Charge - Manual Svc Order vs. Electronic-Disc Add'l
							Rec	Nonrecurring		Nonrecurring Disconnect		OSS Rates($)					
								First	Add'l	First	Add'l	SOMEC	SOMAN	SOMAN	SOMAN	SOMAN	SOMAN
		Loop Testing - Basic 1st Half Hour			UEANL	URET1		34.16	0.00								
		Loop Testing - Basic Additional Half Hour			UEANL	URETA		19.85	19.85								
		Manual Order Coordination for UVL-SL1s (per loop)			UEANL	UEAMC		8.15	8.15								
		Order Coordination for Specified Conversion Time for UVL-SL1 (per LSR)			UEANL	OCOSL		18.09									
		Unbundled Non-Design Voice Loop, billing for BST providing make-up (Engineering Information - E.I.)			UEANL	UEANM		13.44									
		CLEC to CLEC Conversion Charge Without Outside Dispatch (UVL-SL1)			UEANL	UREWO		15.78	8.94	23.49	5.30						
		Bulk Migration, per 2 Wire Voice Loop-SL1			UEANL	UREPN		37.81	17.56	23.49	5.30						
		Bulk Migration Order Coordination, per 2 Wire Voice Loop-SL1			UEANL	UREPM		8.15	8.15								
	2-WIRE Unbundled COPPER LOOP																
		2-Wire Unbundled Copper Loop - Non-Designed Zone 1		1	UEQ	UEQ2X	11.20	34.14	15.10	21.25	4.15						
		2 Wire Unbundled Copper Loop - Non-Designed - Zone 2		2	UEQ	UEQ2X	13.27	34.14	15.10	21.25	4.15						
		2 Wire Unbundled Copper Loop - Non-Designed - Zone 3		3	UEQ	UEQ2X	15.07	34.14	15.10	21.25	4.15						
		Tag Loop at End User Premise			UEQ	URETL		8.93	0.88								
		Loop Testing - Basic 1st Half Hour			UEQ	URET1		34.16	0.00								
		Loop Testing - Basic Additional Half Hour			UEQ	URETA		19.85	19.85								
		Manual Order Coordination 2 Wire Unbundled Copper Loop - Non-Designed (per loop)			UEQ	USBMC		8.15	8.15								
		Unbundled Copper Loop - Non-Designed, billing for BST providing make-up (Engineering Information - E.I.)			UEQ	UEQMU		13.44									
		CLEC to CLEC Conversion Charge Without Outside Dispatch (UCL-ND)			UEQ	UREWO		14.27	7.43	21.25	4.15						
		Bulk Migration, per 2 Wire UCL-ND			UEQ	UREPN		34.14	15.10	21.25	4.15						
		Bulk Migration Order Coordination, per 2 Wire UCL-ND			UEQ	UREPM		8.15	8.15								
UNBUNDLED EXCHANGE ACCESS LOOP																	
	2-WIRE ANALOG VOICE GRADE LOOP																
		2-Wire Analog Voice Grade Loop - Service Level 2 w/Loop or Ground Start Signaling - Zone 1		1	UEA	UEAL2	14.38	88.00	55.00	47.24	7.44						
		2-Wire Analog Voice Grade Loop - Service Level 2 w/Loop or Ground Start Signaling - Zone 2		2	UEA	UEAL2	22.85	88.00	55.00	47.24	7.44						
		2-Wire Analog Voice Grade Loop - Service Level 2 w/Loop or Ground Start Signaling - Zone 3		3	UEA	UEAL2	36.14	88.00	55.00	47.24	7.44						
		2-Wire Analog Voice Grade Loop - Service Level 2 w/Reverse Battery Signaling - Zone 1		1	UEA	UEAR2	14.38	88.00	55.00	47.24	7.44						
		2-Wire Analog Voice Grade Loop - Service Level 2 w/Reverse Battery Signaling - Zone 2		2	UEA	UEAR2	22.85	88.00	55.00	47.24	7.44						
		2-Wire Analog Voice Grade Loop - Service Level 2 w/Reverse Battery Signaling - Zone 3		3	UEA	UEAR2	36.14	88.00	55.00	47.24	7.44						
		Switch-As-Is Conversion rate per UNE Loop, Single LSR, (per DS0)			UEA	URESL		5.59	5.59								
		Switch-As-Is Conversion rate per UNE Loop, Spreadsheet (per DS0)			UEA	URESP		5.59	5.59								
		CLEC to CLEC Conversion Charge without outside dispatch			UEA	UREWO		87.72	36.36								
		Loop Tagging - Service Level 2 (SL2)			UEA	URETL		11.21	1.10								
		Bulk Migration, per 2 Wire Voice Loop-SL2			UEA	UREPN		88.00	55.00								
		Bulk Migration Order Coordination, per 2 Wire Voice Loop-SL2			UEA	UREPM		0.00	0.00								
	4-WIRE ANALOG VOICE GRADE LOOP																
		4-Wire Analog Voice Grade Loop - Zone 1		1	UEA	UEAL4	25.34	131.97	94.51	59.14	14.50						
		4-Wire Analog Voice Grade Loop - Zone 2		2	UEA	UEAL4	38.58	131.97	94.51	59.14	14.50						
		4-Wire Analog Voice Grade Loop - Zone 3		3	UEA	UEAL4	60.02	131.97	94.51	59.14	14.50						
		Switch-As-Is Conversion rate per UNE Loop, Single LSR, (per DS0)			UEA	URESL		5.59	5.59								
		Switch-As-Is Conversion rate per UNE Loop, Spreadsheet, (per DS0)			UEA	URESP		5.59	5.59								
		CLEC to CLEC Conversion Charge without outside dispatch			UEA	UREWO		87.72	36.36								
	2-WIRE ISDN DIGITAL GRADE LOOP																
		2-Wire ISDN Digital Grade Loop - Zone 1		1	UDN	U1L2X	21.88	117.24	79.77	52.88	10.54						

CATEGORY	RATE ELEMENTS	Interim	Zone	BCS	USOC	RATES($)					Svc Order Submitted Elec per LSR	Svc Order Submitted Manually per LSR	Incremental Charge - Manual Svc Order vs. Electronic-1st	Incremental Charge - Manual Svc Order vs. Electronic-Add'l	Incremental Charge - Manual Svc Order vs. Electronic-Disc 1st	Incremental Charge - Manual Svc Order vs. Electronic-Disc Add'l
						Rec	Nonrecurring		Nonrecurring Disconnect		OSS Rates($)					
							First	Add'l	First	Add'l	SOMEC	SOMAN	SOMAN	SOMAN	SOMAN	SOMAN
	2-Wire ISDN Digital Grade Loop - Zone 2		2	UDN	U1L2X	32.85	117.24	79.77	52.88	10.54						
	2-Wire ISDN Digital Grade Loop - Zone 3		3	UDN	U1L2X	48.55	117.24	79.77	52.88	10.54						
	CLEC to CLEC Conversion Charge without outside dispatch			UDN	UREWO		91.63	44.16								
2-WIRE ASYMMETRICAL DIGITAL SUBSCRIBER LINE (ADSL) COMPATIBLE LOOP																
	2 Wire Unbundled ADSL Loop including manual service inquiry & facility reservation - Zone 1		1	UAL	UAL2X	11.01	110.00	68.00	47.24	7.44						
	2 Wire Unbundled ADSL Loop including manual service inquiry & facility reservation - Zone 2		2	UAL	UAL2X	12.73	110.00	68.00	47.24	7.44						
	2 Wire Unbundled ADSL Loop including manual service inquiry & facility reservation - Zone 3		3	UAL	UAL2X	14.30	110.00	68.00	47.24	7.44						
	2 Wire Unbundled ADSL Loop without manual service inquiry & facility reservaton - Zone 1		1	UAL	UAL2W	11.01	90.00	57.00	47.24	7.44						
	2 Wire Unbundled ADSL Loop without manual service inquiry & facility reservaton - Zone 2		2	UAL	UAL2W	12.73	90.00	57.00	47.24	7.44						
	2 Wire Unbundled ADSL Loop without manual service inquiry & facility reservaton - Zone 3		3	UAL	UAL2W	14.30	90.00	57.00	47.24	7.44						
	CLEC to CLEC Conversion Charge without outside dispatch			UAL	UREWO		86.20	40.40								
2-WIRE HIGH BIT RATE DIGITAL SUBSCRIBER LINE (HDSL) COMPATIBLE LOOP																
	2 Wire Unbundled HDSL Loop including manual service inquiry & facility reservation - Zone 1		1	UHL	UHL2X	8.74	110.00	68.00	47.24	7.44						
	2 Wire Unbundled HDSL Loop including manual service inquiry & facility reservation - Zone 2		2	UHL	UHL2X	10.17	110.00	68.00	47.24	7.44						
	2 Wire Unbundled HDSL Loop including manual service inquiry & facility reservation - Zone 3		3	UHL	UHL2X	11.44	110.00	68.00	47.24	7.44						
	2 Wire Unbundled HDSL Loop without manual service inquiry and facility reservation - Zone 1		1	UHL	UHL2W	8.74	90.00	57.00	47.24	7.44						
	2 Wire Unbundled HDSL Loop without manual service inquiry and facility reservation - Zone 2		2	UHL	UHL2W	10.17	90.00	57.00	47.24	7.44						
	2 Wire Unbundled HDSL Loop without manual service inquiry and facility reservation - Zone 3		3	UHL	UHL2W	11.44	90.00	57.00	47.24	7.44						
	CLEC to CLEC Conversion Charge without outside dispatch			UHL	UREWO		86.14	40.40								
4-WIRE HIGH BIT RATE DIGITAL SUBSCRIBER LINE (HDSL) COMPATIBLE LOOP																
	4 Wire Unbundled HDSL Loop including manual service inquiry and facility reservation - Zone 1		1	UHL	UHL4X	13.95	148.36	68.00	51.70	9.73						
	4-Wire Unbundled HDSL Loop including manual service inquiry and facility reservation - Zone 2		2	UHL	UHL4X	15.56	148.36	68.00	51.70	9.73						
	4-Wire Unbundled HDSL Loop including manual service inquiry and facility reservation - Zone 3		3	UHL	UHL4X	15.25	148.36	68.00	51.70	9.73						
	4-Wire Unbundled HDSL Loop without manual service inquiry and facility reservation - Zone 1		1	UHL	UHL4W	13.95	94.00	57.00	51.70	9.73						
	4-Wire Unbundled HDSL Loop without manual service inquiry and facility reservation - Zone 2		2	UHL	UHL4W	15.56	94.00	57.00	51.70	9.73						
	4-Wire Unbundled HDSL Loop without manual service inquiry and facility reservation - Zone 3		3	UHL	UHL4W	15.25	94.00	57.00	51.70	9.73						
	CLEC to CLEC Conversion Charge without outside dispatch			UHL	UREWO		86.14	40.40								
4-WIRE DS1 DIGITAL LOOP																
	4-Wire DS1 Digital Loop - Zone 1		1	USL	USLXX	82.55	252.47	157.54	44.70	11.71						
	4-Wire DS1 Digital Loop - Zone 2		2	USL	USLXX	154.18	252.47	157.54	44.70	11.71						
	4-Wire DS1 Digital Loop - Zone 3		3	USL	USLXX	314.52	252.47	157.54	44.70	11.71						
	Switch-As-Is Conversion rate per UNE Loop, single LSR, (per DS1)			USL	URESL		5.59	5.59								
	Switch-As-Is Conversion rate per UNE Loop, Spreadsheet, (per DS1)			USL	URESP		5.59	5.59								
	CLEC to CLEC Conversion Charge without outside dispatch			USL	UREWO		101.09	43.05								
4-WIRE 19.2, 56 OR 64 KBPS DIGITAL GRADE LOOP																
	4 Wire Unbundled Digital Loop 2.4 Kbps - Zone 1		1	UDL	UDL2X	26.09	126.27	88.80	59.14	14.50						
	4 Wire Unbundled Digital Loop 2.4 Kbps - Zone 2		2	UDL	UDL2X	35.95	126.27	88.80	59.14	14.50						
	4 Wire Unbundled Digital Loop 2.4 Kbps - Zone 3		3	UDL	UDL2X	37.88	126.27	88.80	59.14	14.50						
	4 Wire Unbundled Digital Loop 4.8 Kbps - Zone 1		1	UDL	UDL4X	26.09	126.27	88.80	59.14	14.50						

UNBUNDLED NETWORK ELEMENTS - Alabama

Attachment: 2 Exh A

CATEGORY	RATE ELEMENTS	Interim	Zone	BCS	USOC	RATES($)					Svc Order Submitted Elec per LSR	Svc Order Submitted Manually per LSR	Incremental Charge - Manual Svc Order vs. Electronic-1st	Incremental Charge - Manual Svc Order vs. Electronic-Add'l	Incremental Charge - Manual Svc Order vs. Electronic-Disc 1st	Incremental Charge - Manual Svc Order vs. Electronic-Disc Add'l
						Rec	Nonrecurring		Nonrecurring Disconnect		OSS Rates($)					
							First	Add'l	First	Add'l	SOMEC	SOMAN	SOMAN	SOMAN	SOMAN	SOMAN
	4 Wire Unbundled Digital Loop 4.8 Kbps - Zone 2		2	UDL	UDL4X	35.95	126.27	88.80	59.14	14.50						
	4 Wire Unbundled Digital Loop 4.8 Kbps - Zone 3		3	UDL	UDL4X	37.88	126.27	88.80	59.14	14.50						
	4 Wire Unbundled Digital Loop 9.6 Kbps - Zone 1		1	UDL	UDL9X	26.09	126.27	88.80	59.14	14.50						
	4 Wire Unbundled Digital Loop 9.6 Kbps - Zone 2		2	UDL	UDL9X	35.95	126.27	88.80	59.14	14.50						
	4 Wire Unbundled Digital Loop 9.6 Kbps - Zone 3		3	UDL	UDL9X	37.88	126.27	88.80	59.14	14.50						
	4 Wire Unbundled Digital 19.2 Kbps - Zone 1		1	UDL	UDL19	26.09	126.27	88.80	59.14	14.50						
	4 Wire Unbundled Digital 19.2 Kbps - Zone 2		2	UDL	UDL19	35.95	126.27	88.80	59.14	14.50						
	4 Wire Unbundled Digital 19.2 Kbps - Zone 3		3	UDL	UDL19	37.88	126.27	88.80	59.14	14.50						
	4 Wire Unbundled Digital Loop 56 Kbps - Zone 1		1	UDL	UDL56	26.09	126.27	88.80	59.14	14.50						
	4 Wire Unbundled Digital Loop 56 Kbps - Zone 2		2	UDL	UDL56	35.95	126.27	88.80	59.14	14.50						
	4 Wire Unbundled Digital Loop 56 Kbps - Zone 3		3	UDL	UDL56	37.88	126.27	88.80	59.14	14.50						
	4 Wire Unbundled Digital Loop 64 Kbps - Zone 1		1	UDL	UDL64	26.09	126.27	88.80	59.14	14.50						
	4 Wire Unbundled Digital Loop 64 Kbps - Zone 2		2	UDL	UDL64	35.95	126.27	88.80	59.14	14.50						
	4 Wire Unbundled Digital Loop 64 Kbps - Zone 3		3	UDL	UDL64	37.88	126.27	88.80	59.14	14.50						
	Switch-As-Is Conversion rate per UNE Loop, single LSR, (per DS0)			UDL	URESL		5.59	5.59								
	Switch-As-Is Conversion rate per UNE Loop, Spreadsheet, (per DS0)			UDL	URESP		5.59	5.59								
	CLEC to CLEC Conversion Charge without outside dispatch			UDL	UREWO		102.13	49.75								
2-WIRE Unbundled COPPER LOOP																
	2-Wire Unbundled Copper Loop-Designed including manual service inquiry & facility reservation - Zone 1		1	UCL	UCLPB	11.01	112.46	65.30	47.24	7.44						
	2-Wire Unbundled Copper Loop-Designed including manual service inquiry & facility reservation - Zone 2		2	UCL	UCLPB	12.73	112.46	65.30	47.24	7.44						
	2 Wire Unbundled Copper Loop-Designed including manual service inquiry & facility reservation - Zone 3		3	UCL	UCLPB	14.30	112.46	65.30	47.24	7.44						
	2-Wire Unbundled Copper Loop-Designed without manual service inquiry and facility reservation - Zone 1		1	UCL	UCLPW	11.01	91.46	54.30	47.24	7.44						
	2-Wire Unbundled Copper Loop-Designed without manual service inquiry and facility reservation - Zone 2		2	UCL	UCLPW	12.73	91.46	54.30	47.24	7.44						
	2-Wire Unbundled Copper Loop-Designed without manual service inquiry and facility reservation - Zone 3		3	UCL	UCLPW	14.30	91.46	54.30	47.24	7.44						
	Order Coordination for Unbundled Copper Loops (per loop)			UCL	UCLMC		8.15	8.15								
	CLEC to CLEC Conversion Charge without outside dispatch (UCL-Des)			UCL	UREWO		97.23	42.48								
4-WIRE COPPER LOOP																
	4-Wire Copper Loop-Designed including manual service inquiry and facility reservation - Zone 1		1	UCL	UCL4S	17.36	135.21	88.05	51.70	9.73						
	4-Wire Copper Loop-Designed including manual service inquiry and facility reservation - Zone 2		2	UCL	UCL4S	20.76	135.21	88.05	51.70	9.73						
	4-Wire Copper Loop-Designed including manual service inquiry and facility reservation - Zone 3		3	UCL	UCL4S	28.21	135.21	88.05	51.70	9.73						
	4-Wire Copper Loop-Designed without manual service inquiry and facility reservation - Zone 1		1	UCL	UCL4W	17.36	114.21	67.05	51.70	9.73						
	4-Wire Copper Loop-Designed without manual service inquiry and facility reservation - Zone 2		2	UCL	UCL4W	20.76	114.21	67.05	51.70	9.73						
	4-Wire Copper Loop-Designed without manual service inquiry and facility reservation - Zone 3		3	UCL	UCL4W	28.21	114.21	67.05	51.70	9.73						
	Order Coordination for Unbundled Copper Loops (per loop)			UCL	UCLMC		8.15	8.15								
	CLEC to CLEC conversion Charge without outside dispatch			UCL	UREWO		97.23	42.48								
	Order Coordination for Specified Conversion Time (per LSR)			UEA, UDN, UAL, UHL, UDL, USL	OCOSL		18.90									
Rearrangements																
	EEL to UNE-L Retermination, per 2 Wire Unbundled Voice Loop-SL2			UEA	UREEL		87.72	36.36								
	EEL to UNE-L Retermination, per 4 Wire Unbundled Voice Loop			UEA	UREEL		87.72	36.36								
	EEL to UNE-L Retermination, per 2 Wire ISDN Loop			UDN	UREEL		91.63	44.16								

CATEGORY	RATE ELEMENTS	Interim	Zone	BCS	USOC	RATES($)					Svc Order Submitted Elec per LSR	Svc Order Submitted Manually per LSR	Incremental Charge - Manual Svc Order vs. Electronic-1st	Incremental Charge - Manual Svc Order vs. Electronic-Add'l	Incremental Charge - Manual Svc Order vs. Electronic-Disc 1st	Incremental Charge - Manual Svc Order vs. Electronic-Disc Add'l
						Rec	Nonrecurring		Nonrecurring Disconnect		OSS Rates($)					
							First	Add'l	First	Add'l	SOMEC	SOMAN	SOMAN	SOMAN	SOMAN	SOMAN
	EEL to UNE-L Retermination, per 4 Wire Unbundled Digital Loop			UDL	UREEL		102.13	49.75								
	EEL to UNE-L Retermination, per 4 Wire Unbundled DS1 Loop			USL	UREEL		101.09	43.05								
UNE LOOP COMMINGLING																
2-WIRE ANALOG VOICE GRADE LOOP - COMMINGLING																
	2-Wire Analog Voice Grade Loop - Service Level 2 w/Loop or Ground Start Signaling - Zone 1		1	NTCVG	UEAL2	14.38	88.00	55.00	47.24	7.44						
	2-Wire Analog Voice Grade Loop - Service Level 2 w/Loop or Ground Start Signaling - Zone 2		2	NTCVG	UEAL2	22.85	88.00	55.00	47.24	7.44						
	2-Wire Analog Voice Grade Loop - Service Level 2 w/Loop or Ground Start Signaling - Zone 3		3	NTCVG	UEAL2	36.14	88.00	55.00	47.24	7.44						
	2-Wire Analog Voice Grade Loop - Service Level 2 w/Reverse Battery Signaling - Zone 1		1	NTCVG	UEAR2	14.38	88.00	55.00	47.24	7.44						
	2-Wire Analog Voice Grade Loop - Service Level 2 w/Reverse Battery Signaling - Zone 2		2	NTCVG	UEAR2	22.85	88.00	55.00	47.24	7.44						
	2-Wire Analog Voice Grade Loop - Service Level 2 w/Reverse Battery Signaling - Zone 3		3	NTCVG	UEAR2	36.14	88.00	55.00	47.24	7.44						
	Switch-As-Is Conversion rate per UNE Loop, Single LSR, (per DS0)			NTCVG	URESL		5.59	5.59								
	Switch-As-Is Conversion rate per UNE Loop, Spreadsheet (per DS0)			NTCVG	URESP		5.59	5.59								
	CLEC to CLEC Conversion Charge without outside dispatch			NTCVG	UREWO		87.72	36.36								
	Loop Tagging - Service Level 2 (SL2)			NTCVG	URETL		11.21	1.10								
4-WIRE ANALOG VOICE GRADE LOOP - COMMINGLING																
	4-Wire Analog Voice Grade Loop - Zone 1		1	NTCVG	UEAL4	25.34	131.97	94.51	59.14	14.50						
	4-Wire Analog Voice Grade Loop - Zone 2		2	NTCVG	UEAL4	38.58	131.97	94.51	59.14	14.50						
	4-Wire Analog Voice Grade Loop - Zone 3		3	NTCVG	UEAL4	60.02	131.97	94.51	59.14	14.50						
	Switch-As-Is Conversion rate per UNE Loop, Single LSR, (per DS0)			NTCVG	URESL		5.59	5.59								
	Switch-As-Is Conversion rate per UNE Loop, Spreadsheet, (per DS0)			NTCVG	URESP		5.59	5.59								
	CLEC to CLEC Conversion Charge without outside dispatch			NTCVG	UREWO		87.72	36.36								
4-WIRE DS1 DIGITAL LOOP - COMMINGLING																
	4-Wire DS1 Digital Loop - Zone 1		1	NTCD1	USLXX	82.55	252.47	157.54	44.70	11.71						
	4-Wire DS1 Digital Loop - Zone 2		2	NTCD1	USLXX	154.18	252.47	157.54	44.70	11.71						
	4-Wire DS1 Digital Loop - Zone 3		3	NTCD1	USLXX	314.52	252.47	157.54	44.70	11.71						
	Switch-As-Is Conversion rate per UNE Loop, single LSR, (per DS1)			NTCD1	URESL		5.59	5.59								
	Switch-As-Is Conversion rate per UNE Loop, Spreadsheet, (per DS1)			NTCD1	URESP		5.59	5.59								
	CLEC to CLEC Conversion Charge without outside dispatch			NTCD1	UREWO		101.09	43.05								
4-WIRE 19.2, 56 OR 64 KBPS DIGITAL GRADE LOOP - COMMINGLING																
	4 Wire Unbundled Digital Loop 2.4 Kbps - Zone 1		1	NTCUD	UDL2X	26.09	126.27	88.80	59.14	14.50						
	4 Wire Unbundled Digital Loop 2.4 Kbps - Zone 2		2	NTCUD	UDL2X	35.95	126.27	88.80	59.14	14.50						
	4 Wire Unbundled Digital Loop 2.4 Kbps - Zone 3		3	NTCUD	UDL2X	37.88	126.27	88.80	59.14	14.50						
	4 Wire Unbundled Digital Loop 4.8 Kbps - Zone 1		1	NTCUD	UDL4X	26.09	126.27	88.80	59.14	14.50						
	4 Wire Unbundled Digital Loop 4.8 Kbps - Zone 2		2	NTCUD	UDL4X	35.95	126.27	88.80	59.14	14.50						
	4 Wire Unbundled Digital Loop 4.8 Kbps - Zone 3		3	NTCUD	UDL4X	37.88	126.27	88.80	59.14	14.50						
	4 Wire Unbundled Digital Loop 9.6 Kbps - Zone 1		1	NTCUD	UDL9X	26.09	126.27	88.80	59.14	14.50						
	4 Wire Unbundled Digital Loop 9.6 Kbps - Zone 2		2	NTCUD	UDL9X	35.95	126.27	88.80	59.14	14.50						
	4 Wire Unbundled Digital Loop 9.6 Kbps - Zone 3		3	NTCUD	UDL9X	37.88	126.27	88.80	59.14	14.50						
	4 Wire Unbundled Digital 19.2 Kbps - Zone 1		1	NTCUD	UDL19	26.09	126.27	88.80	59.14	14.50						
	4 Wire Unbundled Digital 19.2 Kbps - Zone 2		2	NTCUD	UDL19	35.95	126.27	88.80	59.14	14.50						
	4 Wire Unbundled Digital 19.2 Kbps - Zone 3		3	NTCUD	UDL19	37.88	126.27	88.80	59.14	14.50						
	4 Wire Unbundled Digital Loop 56 Kbps - Zone 1		1	NTCUD	UDL56	26.09	126.27	88.80	59.14	14.50						
	4 Wire Unbundled Digital Loop 56 Kbps - Zone 2		2	NTCUD	UDL56	35.95	126.27	88.80	59.14	14.50						
	4 Wire Unbundled Digital Loop 56 Kbps - Zone 3		3	NTCUD	UDL56	37.88	126.27	88.80	59.14	14.50						
	4 Wire Unbundled Digital Loop 64 Kbps - Zone 1		1	NTCUD	UDL64	26.09	126.27	88.80	59.14	14.50						
	4 Wire Unbundled Digital Loop 64 Kbps - Zone 2		2	NTCUD	UDL64	35.95	126.27	88.80	59.14	14.50						

UNBUNDLED NETWORK ELEMENTS - Alabama														Attachment: 2 Exh A			
CATEGORY		RATE ELEMENTS	Interim	Zone	BCS	USOC	RATES($)					Svc Order Submitted Elec per LSR	Svc Order Submitted Manually per LSR	Incremental Charge - Manual Svc Order vs. Electronic-1st	Incremental Charge - Manual Svc Order vs. Electronic-Add'l	Incremental Charge - Manual Svc Order vs. Electronic-Disc 1st	Incremental Charge - Manual Svc Order vs. Electronic-Disc Add'l
							Rec	Nonrecurring		Nonrecurring Disconnect		OSS Rates($)					
								First	Add'l	First	Add'l	SOMEC	SOMAN	SOMAN	SOMAN	SOMAN	SOMAN
		4 Wire Unbundled Digital Loop 64 Kbps - Zone 3		3	NTCUD	UDL64	37.88	126.27	88.80	59.14	14.50						
		Switch-As-Is Conversion rate per UNE Loop, single LSR, (per DS0)			NTCUD	URESL		5.59	5.59								
		Switch-As-Is Conversion rate per UNE Loop, Spreadsheet, (per DS0)			NTCUD	URESP		5.59	5.59								
		CLEC to CLEC Conversion Charge without outside dispatch			NTCUD	UREWO		102.13	49.75								
		Order Coordination for Specified Conversion Time (per LSR)			NTCVG, NTCUD, NTCD1	OCOSL		18.90									
LOOP MODIFICATION																	
		Unbundled Loop Modification, Removal of Load Coils - 2 Wire pair less than or equal to 18k ft. per Unbundled Loop			UAL, UHL, UCL, UEQ, UEA, UEANL, UEPSR, UEPSB	ULM2L		0.00	0.00								
		Unbundled Loop Modification Removal of Load Coils - 4 Wire less than or equal to 18K ft, per Unbundled Loop			UHL, UCL, UEA	ULM4L		0.00	0.00								
		Unbundled Loop Modification Removal of Bridged Tap Removal, per unbundled loop			UAL, UHL, UCL, UEQ, UEA, UEANL, UEPSR, UEPSB	ULMBT		32.41	32.41								
SUB-LOOPS																	
	Sub-Loop Distribution																
		Sub-Loop - Per Cross Box Location - CLEC Feeder Facility Set-Up			UEANL, UEF	USBSA		244.42									
		Sub-Loop - Per Cross Box Location - Per 25 Pair Panel Set-Up			UEANL, UEF	USBSB		22.64									
		Sub-Loop - Per Building Equipment Room - CLEC Feeder Facility Set-Up			UEANL	USBSC		177.45									
		Sub-Loop - Per Building Equipment Room - Per 25 Pair Panel Set-Up			UEANL	USBSD		55.15									
		Sub-Loop Distribution Per 2-Wire Analog Voice Grade Loop - Zone 1		1	UEANL	USBN2	11.21	65.80	30.96	45.25	6.70						
		Sub-Loop Distribution Per 2-Wire Analog Voice Grade Loop - Zone 2		2	UEANL	USBN2	11.94	65.80	30.96	45.25	6.70						
		Sub-Loop Distribution Per 2-Wire Analog Voice Grade Loop - Zone 3		3	UEANL	USBN2	16.86	65.80	30.96	45.25	6.70						
		Order Coordination for Unbundled Sub-Loops, per sub-loop pair			UEANL	USBMC		8.15	8.15								
		Sub-Loop Distribution Per 4-Wire Analog Voice Grade Loop - Zone 1		1	UEANL	USBN4	8.46	79.03	44.19	49.71	9.07						
		Sub-Loop Distribution Per 4-Wire Analog Voice Grade Loop - Zone 2		2	UEANL	USBN4	16.67	79.03	44.19	49.71	9.07						
		Sub-Loop Distribution Per 4-Wire Analog Voice Grade Loop - Zone 3		3	UEANL	USBN4	32.57	79.03	44.19	49.71	9.07						
		Order Coordination for Unbundled Sub-Loops, per sub-loop pair			UEANL	USBMC		8.15	8.15								
		Sub-Loop 2-Wire Intrabuilding Network Cable (INC)			UEANL	USBR2	2.27	53.01	18.17	45.25	6.70						
		Order Coordination for Unbundled Sub-Loops, per sub-loop pair			UEANL	USBMC		8.15	8.15								
		Sub-Loop 4-Wire Intrabuilding Network Cable (INC)			UEANL	USBR4	5.16	59.25	24.41	49.71	9.07						
		Order Coordination for Unbundled Sub-Loops, per sub-loop pair			UEANL	USBMC		8.15	8.15								
		Loop Testing - Basic 1st Half Hour			UEANL	URET1		34.16	0.00								
		Loop Testing - Basic Additional Half Hour			UEANL	URETA		19.85	19.85								
		2 Wire Copper Unbundled Sub-Loop Distribution - Zone 1		1	UEF	UCS2X	6.22	65.80	30.96	45.25	6.70						
		2 Wire Copper Unbundled Sub-Loop Distribution - Zone 2		2	UEF	UCS2X	8.76	65.80	30.96	45.25	6.70						
		2 Wire Copper Unbundled Sub-Loop Distribution - Zone 3		3	UEF	UCS2X	11.27	65.80	30.96	45.25	6.70						
		Order Coordination for Unbundled Sub-Loops, per sub-loop pair			UEF	USBMC		8.15	8.15								
		4 Wire Copper Unbundled Sub-Loop Distribution - Zone 1		1	UEF	UCS4X	6.11	79.03	44.19	49.71	9.07						
		4 Wire Copper Unbundled Sub-Loop Distribution - Zone 2		2	UEF	UCS4X	12.61	79.03	44.19	49.71	9.07						
		4 Wire Copper Unbundled Sub-Loop Distribution - Zone 3		3	UEF	UCS4X	15.36	79.03	44.19	49.71	9.07						
		Order Coordination for Unbundled Sub-Loops, per sub-loop pair			UEF	USBMC		8.15	8.15								

CATEGORY	RATE ELEMENTS	Interim	Zone	BCS	USOC	RATES($) Rec	Nonrecurring First	Nonrecurring Add'l	Nonrecurring Disconnect First	Nonrecurring Disconnect Add'l	Svc Order Submitted Elec per LSR	Svc Order Submitted Manually per LSR	Incremental Charge - Manual Svc Order vs. Electronic-1st	Incremental Charge - Manual Svc Order vs. Electronic-Add'l	Incremental Charge - Manual Svc Order vs. Electronic-Disc 1st	Incremental Charge - Manual Svc Order vs. Electronic-Disc Add'l
											OSS Rates($)					
											SOMEC	SOMAN	SOMAN	SOMAN	SOMAN	SOMAN
	Loop Tagging Service Level 1, Unbundled Copper Loop, Non-Designed and Distribution Subloops			UEF, UEANL	URETL		8.93	0.88								
	Loop Testing - Basic 1st Half Hour			UEF	URET1		34.16	0.00								
	Loop Testing - Basic Additional Half Hour			UEF	URETA		19.85	19.85								
Unbundled Sub-Loop Modification																
	Unbundled Sub-Loop Modification - 2-W Copper Dist Load Coil/Equip Removal per 2-W PR			UEF	ULM2X		175.78	5.10								
	Unbundled Sub-loop Modification - 4-W Copper Dist Load Coil/Equip Removal per 4-W PR			UEF	ULM4X		175.78	5.10								
	Unbundled Loop Modification, Removal of Bridge Tap, per unbundled loop			UEF	ULMBT		278.20	6.11								
Unbundled Network Terminating Wire (UNTW)																
	Unbundled Network Terminating Wire (UNTW) per Pair			UENTW	UENPP	0.40	30.01									
Network Interface Device (NID)																
	Network Interface Device (NID) - 1-2 lines			UENTW	UND12		43.23	28.38								
	Network Interface Device (NID) - 1-6 lines			UENTW	UND16		63.97	49.11								
	Network Interface Device Cross Connect - 2 W			UENTW	UNDC2		5.87	5.87								
	Network Interface Device Cross Connect - 4W			UENTW	UNDC4		5.87	5.87								
UNE OTHER, PROVISIONING ONLY - NO RATE																
	Unbundled Contact Name, Provisioning Only - no rate			UAL, UCL, UDC, UDL, UDN, UEA, UHL, UEANL, UEF, UEQ, UENTW, NTCVG, NTCUD, NTCD1, USL	UNECN	0.00	0.00									
	Unbundled DS1 Loop - Superframe Format Option - no rate			USL, NTCD1	CCOSF		0.00									
	Unbundled DS1 Loop - Expanded Superframe Format option - no rate			USL, NTCD1	CCOEF		0.00									
	NID - Dispatch and Service Order for NID installation			UENTW	UNDBX	0.00	0.00									
	UNTW Circuit Establishment, Provisioning Only - No Rate			UENTW	UENCE	0.00	0.00									
LOOP MAKE-UP																
	Loop Makeup - Preordering Without Reservation, per working or spare facility queried (Manual).			UMK	UMKLW		20.00	20.00								
	Loop Makeup - Preordering With Reservation, per spare facility queried (Manual).			UMK	UMKLP		21.00	21.00								
	Loop Makeup--With or Without Reservation, per working or spare facility queried (Mechanized)			UMK	UMKMQ		0.59	0.59								
LINE SPLITTING																
END USER ORDERING-CENTRAL OFFICE BASED																
	Line Splitting - per line activation DLEC owned splitter			UEPSR UEPSB	UREOS	0.61										
	Line Splitting - per line activation BST owned - physical			UEPSR UEPSB	UREBP	0.61	37.01	21.19	20.02	9.83						
	Line Splitting - per line activation BST owned - virtual			UEPSR UEPSB	UREBV	0.61	37.01	21.19	20.02	9.83						
END USER ORDERING - REMOTE SITE LINE SPLITTING																
UNBUNDLED EXCHANGE ACCESS LOOP																
2-WIRE ANALOG VOICE GRADE LOOP																
	2 Wire Analog Voice Grade Loop-Service Level 1-Line Splitting-Zone 1		1	UEPSR UEPSB	UEALS	12.58	37.81	17.56	23.49	5.30						
	2 Wire Analog Voice Grade Loop-Service Level 1-Line Splitting-Zone 1		1	UEPSR UEPSB	UEABS	12.58	37.81	17.56	23.49	5.30						
	2 Wire Analog Voice Grade Loop- Service Level 1-Line Splitting-Zone 2		2	UEPSR UEPSB	UEALS	21.05	37.81	17.56	23.49	5.30						
	2 Wire Analog Voice Grade Loop- Service Level 1-Line Splitting-Zone 2		2	UEPSR UEPSB	UEABS	21.05	37.81	17.56	23.49	5.30						
	2 Wire Analog Voice Grade Loop-Service Level 1-Line Splitting-Zone 3		3	UEPSR UEPSB	UEALS	34.34	37.81	17.56	23.49	5.30						
	2 Wire Analog Voice Grade Loop-Service Level 1-Line Splitting-Zone 3		3	UEPSR UEPSB	UEABS	34.34	37.81	17.56	23.49	5.30						
PHYSICAL COLLOCATION																

UNBUNDLED NETWORK ELEMENTS - Alabama

Attachment: 2 Exh A

CATEGORY	RATE ELEMENTS	Interim	Zone	BCS	USOC	RATES($) Rec	Nonrecurring First	Nonrecurring Add'l	Nonrecurring Disconnect First	Nonrecurring Disconnect Add'l	Svc Order Submitted Elec per LSR	Svc Order Submitted Manually per LSR	Incremental Charge - Manual Svc Order vs. Electronic-1st	Incremental Charge - Manual Svc Order vs. Electronic-Add'l	Incremental Charge - Manual Svc Order vs. Electronic-Disc 1st	Incremental Charge - Manual Svc Order vs. Electronic-Disc Add'l
											OSS Rates($)					
							First	Add'l	First	Add'l	SOMEC	SOMAN	SOMAN	SOMAN	SOMAN	SOMAN
	Physical Collocation-2 Wire Cross Connects (Loop) for Line Splitting			UEPSR UEPSB	PE1LS	0.03	12.30	11.80	6.03	5.44						
	VIRTUAL COLLOCATION															
	Virtual Collocation-2 Wire Cross Connects (Loop) for Line Splitting			UEPSR UEPSB	VE1LS	0.03	12.30	11.80	6.03	5.44						
MAINTENANCE OF SERVICE																
	NOTE: The Expedite charge will be maintained commensurate with BellSouth's FCC No.1 Tariff, Section 13.3.1 as applicable.															
	No Trouble Found - per 1/2 hour increments - Basic						80.00	55.00								
	No Trouble Found - per 1/2 hour increments - Overtime						90.00	65.00								
	No Trouble Found - per 1/2 hour increments - Premium						100.00	75.00								
UNBUNDLED DEDICATED TRANSPORT																
	INTEROFFICE CHANNEL - DEDICATED TRANSPORT															
	Interoffice Channel - 2-Wire Voice Grade - per mile			U1TVX	1L5XX	0.008838										
	Interoffice Channel - 2-Wire Voice Grade - Facility Termination			U1TVX	U1TV2	21.13	40.54	27.41	16.74	6.90						
	Interoffice Channel - 2-Wire Voice Grade Rev Bat. - per mile			U1TVX	1L5XX	0.008838										
	Interoffice Channel - 2-Wire VG Rev Bat. - Facility Termination			U1TVX	U1TR2	21.13	40.54	27.41	16.74	6.90						
	Interoffice Channel - 4-Wire Voice Grade - per mile			U1TVX	1L5XX	0.008838										
	Interoffice Channel - 4- Wire Voice Grade - Facility Termination			U1TVX	U1TV4	18.73	40.54	27.41	16.74	6.90						
	Interoffice Channel - 56 kbps - per mile			U1TDX	1L5XX	0.008838										
	Interoffice Channel - 56 kbps - Facility Termination			U1TDX	U1TD5	15.12	40.54	27.41	16.74	6.90						
	Interoffice Channel - 64 kbps - per mile			U1TDX	1L5XX	0.008838										
	Interoffice Channel - 64 kbps - Facility Termination			U1TDX	U1TD6	15.12	40.54	27.41	16.74	6.90						
	Interoffice Channel - DS1 - per mile			U1TD1	1L5XX	0.18										
	Interoffice Channel - DS1 - Facility Termination			U1TD1	U1TF1	60.16	89.27	81.81	16.35	14.44						
	Interoffice Channel - DS3 - per mile			U1TD3	1L5XX	4.09										
	Interoffice Channel - DS3 - Facility Termination			U1TD3	U1TF3	703.52	278.75	162.76	60.20	58.46						
	Interoffice Channel - STS-1 - per mile			U1TS1	1L5XX	4.09										
	Interoffice Channel - STS-1 - Facility Termination			U1TS1	U1TFS	701.37	278.75	162.76	60.20	58.46						
	UNBUNDLED DARK FIBER - Stand Alone or in Combination															
	Dark Fiber - Interoffice Transport, Per Four Fiber Strands, Per Route Mile Or Fraction Thereof			UDF, UDFCX	1L5DF	22.34										
	Dark Fiber - Interoffice Transport, Per Four Fiber Strands, Per Route Mile Or Fraction Thereof			UDF, UDFCX	UDF14		639.09	137.87	317.06	197.66						
HIGH CAPACITY UNBUNDLED LOCAL LOOP																
	DS-3/STS-1 UNBUNDLED LOCAL LOOP - Stand Alone															
	DS3 Unbundled Local Loop - per mile			UE3	1L5ND	8.38										
	DS3 Unbundled Local Loop - Facility Termination			UE3	UE3PX	308.08	451.52	263.94	119.49	83.58						
	STS-1Unbundled Local Loop - per mile			UDLSX	1L5ND	8.38										
	STS-1 Unbundled Local Loop - Facility Termination			UDLSX	UDLS1	319.83	451.52	263.94	119.49	83.58						
ENHANCED EXTENDED LINK (EELs)																
	Network Elements Used in Combinations															
	2-Wire VG Loop (SL2) in Combination - Zone 1		1	UNCVX	UEAL2	14.38	88.00	55.00	47.24	7.44						
	2-Wire VG Loop (SL2) in Combination - Zone 2		2	UNCVX	UEAL2	22.85	88.00	55.00	47.24	7.44						
	2-Wire VG Loop (SL2) in Combination - Zone 3		3	UNCVX	UEAL2	36.14	88.00	55.00	47.24	7.44						
	4-Wire Analog Voice Grade Loop in Combination - Zone 1		1	UNCVX	UEAL4	25.34	131.97	94.51	59.14	14.50						
	4-Wire Analog Voice Grade Loop in Combination - Zone 2		2	UNCVX	UEAL4	38.58	131.97	94.51	59.14	14.50						
	4-Wire Analog Voice Grade Loop in Combination - Zone 3		3	UNCVX	UEAL4	60.02	131.97	94.51	59.14	14.50						
	2-Wire ISDN Loop in Combination - Zone 1		1	UNCNX	U1L2X	21.88	117.24	79.77	52.88	10.54						
	2-Wire ISDN Loop in Combination - Zone 2		2	UNCNX	U1L2X	32.85	117.24	79.77	52.88	10.54						
	2-Wire ISDN Loop in Combination - Zone 3		3	UNCNX	U1L2X	48.55	117.24	79.77	52.88	10.54						
	4-Wire 56Kbps Digital Grade Loop in Combination - Zone 1		1	UNCDX	UDL56	26.09	126.27	88.80	59.14	14.50						
	4-Wire 56Kbps Digital Grade Loop in Combination - Zone 2		2	UNCDX	UDL56	35.95	126.27	88.80	59.14	14.50						
	4-Wire 56Kbps Digital Grade Loop in Combination - Zone 3		3	UNCDX	UDL56	37.88	126.27	88.80	59.14	14.50						
	4-Wire 64Kbps Digital Grade Loop in Combination - Zone 1		1	UNCDX	UDL64	26.09	126.27	88.80	59.14	14.50						
	4-Wire 64Kbps Digital Grade Loop in Combination - Zone 2		2	UNCDX	UDL64	35.95	126.27	88.80	59.14	14.50						
	4-Wire 64Kbps Digital Grade Loop in Combination - Zone 3		3	UNCDX	UDL64	37.88	126.27	88.80	59.14	14.50						
	4-Wire DS1 Digital Loop in Combination - Zone 1		1	UNC1X	USLXX	82.55	252.47	157.54	44.70	11.71						

CATEGORY		RATE ELEMENTS	Interim	Zone	BCS	USOC	RATES($)					Svc Order Submitted Elec per LSR	Svc Order Submitted Manually per LSR	Incremental Charge - Manual Svc Order vs. Electronic-1st	Incremental Charge - Manual Svc Order vs. Electronic-Add'l	Incremental Charge - Manual Svc Order vs. Electronic-Disc 1st	Incremental Charge - Manual Svc Order vs. Electronic-Disc Add'l
							Rec	Nonrecurring		Nonrecurring Disconnect		OSS Rates($)					
								First	Add'l	First	Add'l	SOMEC	SOMAN	SOMAN	SOMAN	SOMAN	SOMAN
		4-Wire DS1 Digital Loop in Combination - Zone 2		2	UNC1X	USLXX	154.18	252.47	157.54	44.70	11.71						
		4-Wire DS1 Digital Loop in Combination - Zone 3		3	UNC1X	USLXX	314.52	252.47	157.54	44.70	11.71						
		DS3 Local Loop in combination - per mile			UNC3X	1L5ND	8.38										
		DS3 Local Loop in combination - Facility Termination			UNC3X	UE3PX	308.08	451.52	263.94	119.49	83.58						
		STS-1 Local Loop in combination - per mile			UNCSX	1L5ND	8.38										
		STS-1 Local Loop in combination - Facility Termination			UNCSX	UDLS1	319.83	451.52	263.94	119.49	83.58						
		Interoffice Channel in combination - 2-wire VG - per mile			UNCVX	1L5XX	0.008838										
		Interoffice Channel in combination - 2-wire VG - Facility Termination			UNCVX	U1TV2	21.13	40.54	27.41	16.74	6.90						
		Interoffice Channel in combination - 4-wire VG - per mile			UNCVX	1L5XX	0.008838										
		Interoffice Channel in combination - 4-wire VG - Facility Termination			UNCVX	U1TV4	18.73	40.54	27.41	16.74	6.90						
		Interoffice Channel in combination - 4-wire 56 kbps - per mile			UNCDX	1L5XX	0.008838										
		Interoffice Channel in combination - 4-wire 56 kbps - Facility Termination			UNCDX	U1TD5	15.12	40.54	27.41	16.74	6.90						
		Interoffice Channel in combination - 4-wire 64 kbps - per mile			UNCDX	1L5XX	0.008838										
		Interoffice Channel in combination - 4-wire 64 kbps - Facility Termination			UNCDX	U1TD6	15.12	40.54	27.41	16.74	6.90						
		Interoffice Channel in combination - DS1 - per mile			UNC1X	1L5XX	0.18										
		Interoffice Channel in combination - DS1 Facility Termination			UNC1X	U1TF1	60.16	89.27	81.81	16.35	14.44						
		Interoffice Channel in combination - DS3 - per mile			UNC3X	1L5XX	4.09										
		Interoffice Channel in combination - DS3 - Facility Termination			UNC3X	U1TF3	703.52	278.75	162.76	60.20	58.46						
		Interoffice Channel in combination - STS-1 - per mile			UNCSX	1L5XX	4.09										
		Interoffice Channel in combination - STS-1 Facility Termination			UNCSX	U1TFS	701.37	278.75	162.76	60.20	58.46						
ADDITIONAL NETWORK ELEMENTS																	
	Optional Features & Functions:																
		Clear Channel Capability Extended Frame Option - per DS1	I		U1TD1, ULDD1,UNC1X	CCOEF		0.00	0.00								
		Clear Channel Capability Super FrameOption - per DS1	I		U1TD1, ULDD1,UNC1X	CCOSF		0.00	0.00								
		Clear Channel Capability (SF/ESF) Option - Subsequent Activity - per DS1	I		ULDD1, U1TD1, UNC1X, USL	NRCCC		184.85	23.81	1.99	0.7741						
		C-bit Parity Option - Subsequent Activity - per DS3	i		U1TD3, ULDD3, UE3, UNC3X	NRCC3		219.13	7.67	0.7355	0.00						
		DS1/DS0 Channel System			UNC1X	MQ1	107.19	91.04	62.57	10.54	9.79						
		DS3/DS1Channel System			UNC3X, UNCSX	MQ3	176.20	178.14	93.97	33.26	31.83						
		Voice Grade COCI in combination			UNCVX	1D1VG	0.56	6.58	4.72								
		Voice Grade COCI - for Stand Alone Local Loop			UEA	1D1VG	0.56	6.58	4.72								
		Voice Grade COCI - for connection to a channelized DS1 Local Channel in the same SWC as collocation			U1TUC	1D1VG	0.56	6.58	4.72								
		2-wire ISDN COCI (BRITE) in combination			UNCNX	UC1CA	2.41	6.58	4.72								
		2-wire ISDN COCI (BRITE) - for a Local Loop			UDN	UC1CA	2.41	6.58	4.72								
		2-wire ISDN COCI (BRITE) - for connection to a channelized DS1 Local Channel in the same SWC as collocation			U1TUB	UC1CA	2.41	6.58	4.72								
		OCU-DP COCI (2.4-64kbs) in combination			UNCDX	1D1DD	1.19	6.58	4.72								
		OCU-DP COCI (2.4-64kbs) - for Stand Alone Local Loop			UDL	1D1DD	1.19	6.58	4.72								
		OCU-DP COCI (2.4-64kbs) - for connection to a channelized DS1 Local Channel in the same SWC as collocation			U1TUD	1D1DD	1.19	6.58	4.72								
		DS1 COCI in combination			UNC1X	UC1D1	13.47	6.58	4.72								
		DS1 COCI - for Stand Alone Local Channel			ULDD1	UC1D1	13.47	6.58	4.72								
		DS1 COCI - for Stand Alone Interoffice Channel			U1TD1	UC1D1	13.47	6.58	4.72								
		DS1 COCI - for Stand Alone Local Loop			USL	UC1D1	13.47	6.58	4.72								
		DS1 COCI - for connection to a channelized DS1 Local Channel in the same SWC as collocation			U1TUA	UC1D1	13.47	6.58	4.72								

CATEGORY	RATE ELEMENTS	Interim	Zone	BCS	USOC	RATES($) Rec	Nonrecurring First	Nonrecurring Add'l	Nonrecurring Disconnect First	Nonrecurring Disconnect Add'l	Svc Order Submitted Elec per LSR	Svc Order Submitted Manually per LSR	Incremental Charge - Manual Svc Order vs. Electronic-1st	Incremental Charge - Manual Svc Order vs. Electronic-Add'l	Incremental Charge - Manual Svc Order vs. Electronic-Disc 1st	Incremental Charge - Manual Svc Order vs. Electronic-Disc Add'l
											OSS Rates($)					
							First	Add'l	First	Add'l	SOMEC	SOMAN	SOMAN	SOMAN	SOMAN	SOMAN
	Wholesale - UNE, Switch-As-Is Conversion Charge			UNCVX, UNCDX, UNC1X, UNC3X, UNCSX, UDFCX, XDH1X, HFQC6, XDD2X, XDV6X, XDDFX, XDD4X, HFRST	UNCCC		5.59	5.59								
	Unbundled Misc Rate Element, SNE SAI, Single Network Element - Switch As Is Non-recurring Charge, per circuit (LSR)	I		U1TVX, U1TDX, U1TD1, U1TD3, U1TS1, UDF, UE3	URESL		36.70	16.06								
	Unbundled Misc Rate Element, SNE SAI, Single Network Element - Switch As Is Non-recurring Charge, incremental charge per circuit on a spreadsheet	i		U1TVX, U1TDX, U1TD1, U1TD3, U1TS1, UDF, UE3	URESP		1.48	1.48								
Access to DCS - Customer Reconfiguration (FlexServ)																
	Customer Reconfiguration Establishment						1.48		1.84							
	DS1 DCS Termination with DS0 Switching					29.46	25.55	19.66	16.63	13.38						
	DS1 DCS Termination with DS1 Switching					9.94	18.47	12.58	12.21	8.96						
	DS3 DCS Termination with DS1 Switching					105.16	25.55	19.66	16.63	13.38						
Node (SynchroNet)																
	Node per month			UNCDX	UNCNT	15.77										
Service Rearrangements																
	NRC - Change in Facility Assignment per circuit Service Rearrangement	I		U1TVX, U1TDX, UEA, UDL, U1TUC, U1TUD, U1TUB, ULDVX, ULDDX, UNCVX, UNCDX, UNC1X	URETD		101.09	43.05								
	NRC - Change in Facility Assignment per circuit Project Management (added to CFA per circuit if project managed)	I		U1TVX, U1TDX, UEA, UDL, U1TUC, U1TUD, U1TUB, ULDVX, ULDDX, UNCVX, UNCDX, UNC1X	URETB		3.16	3.16								
	NRC - Order Coordination Specific Time - Dedicated Transport	I		UNC1X, UNC3X	OCOSR		18.93	18.93								
	UNE Reconfiguration Change Charge per Circuit	I		UNC1X	URERC		35.00	35.00								
	UNE Reconfiguration Change Charge per Circuit Project Managed	I		UNC1X	URERP		3.16	3.16								
COMMINGLING																
	Commingling Authorization			UNCVX, UNCDX, UNC1X, UNC3X, UNCSX, U1TD1, U1TD3, U1TS1, UE3, UDLSX, U1TVX, U1TDX, U1TUB, ULDVX, ULDD1, ULDD3, ULDS1	CMGAU	0.00	0.00	0.00	0.00	0.00						
Commingled (UNE part of single bandwidth circuit)																
	Commingled VG COCI			XDV2X, NTCVG	1D1VG	0.56	6.58	4.72								
	Commingled Digital COCI			XDV6X, NTCUD	1D1DD	1.19	6.58	4.72								
	Commingled ISDN COCI			XDD4X	UC1CA	2.41	6.58	4.72								
	Commingled 2-wire VG Interoffice Channel			XDV2X	U1TV2	21.13	40.54	27.41	16.74	6.90						
	Commingled 4-wire VG Interoffice Channel			XDV6X	U1TV4	18.73	40.54	27.41	16.74	6.90						
	Commingled 56kbps Interoffice Channel			XDD4X	U1TD5	15.12	40.54	27.41	16.74	6.90						
	Commingled 64kbps Interoffice Channel			XDD4X	U1TD6	15.12	40.54	27.41	16.74	6.90						
	Commingled VG/DS0 Interoffice Channel Mileage			XDV2X, XDV6X, XDD4X	1L5XX	0.008838										
	Commingled 2-wire Local Loop Zone 1		1	XDV2X	UEAL2	14.38	88.00	55.00	47.24	7.44						
	Commingled 2-wire Local Loop Zone 2		2	XDV2X	UEAL2	22.85	88.00	55.00	47.24	7.44						

UNBUNDLED NETWORK ELEMENTS - Alabama														Attachment: 2 Exh A			
CATEGORY		RATE ELEMENTS	Interim	Zone	BCS	USOC	RATES($)					Svc Order Submitted Elec per LSR	Svc Order Submitted Manually per LSR	Incremental Charge - Manual Svc Order vs. Electronic-1st	Incremental Charge - Manual Svc Order vs. Electronic-Add'l	Incremental Charge - Manual Svc Order vs. Electronic-Disc 1st	Incremental Charge - Manual Svc Order vs. Electronic-Disc Add'l
							Rec	Nonrecurring		Nonrecurring Disconnect		OSS Rates($)					
								First	Add'l	First	Add'l	SOMEC	SOMAN	SOMAN	SOMAN	SOMAN	SOMAN
		Commingled 2-wire Local Loop Zone 3		3	XDV2X	UEAL2	36.14	88.00	55.00	47.24	7.44						
		Commingled 4-wire Local Loop Zone 1		1	XDV6X	UEAL4	25.34	131.97	94.51	59.14	14.50						
		Commingled 4-wire Local Loop Zone 2		2	XDV6X	UEAL4	38.58	131.97	94.51	59.14	14.50						
		Commingled 4-wire Local Loop Zone 3		3	XDV6X	UEAL4	60.02	131.97	94.51	59.14	14.50						
		Commingled 56kbps Local Loop Zone 1		1	XDD4X	UDL56	26.09	126.27	88.80	59.14	14.50						
		Commingled 56kbps Local Loop Zone 2		2	XDD4X	UDL56	35.95	126.27	88.80	59.14	14.50						
		Commingled 56kbps Local Loop Zone 3		3	XDD4X	UDL56	37.88	126.27	88.80	59.14	14.50						
		Commingled 64kbps Local Loop Zone 1		1	XDD4X	UDL64	26.09	126.27	88.80	59.14	14.50						
		Commingled 64kbps Local Loop Zone 2		2	XDD4X	UDL64	35.95	126.27	88.80	59.14	14.50						
		Commingled 64kbps Local Loop Zone 3		3	XDD4X	UDL64	37.88	126.27	88.80	59.14	14.50						
		Commingled ISDN Local Loop Zone 1		1	XDD4X	U1L2X	21.88	117.24	79.77	52.88	10.54						
		Commingled ISDN Local Loop Zone 2		2	XDD4X	U1L2X	32.85	117.24	79.77	52.88	10.54						
		Commingled ISDN Local Loop Zone 3		3	XDD4X	U1L2X	48.55	117.24	79.77	52.88	10.54						
		Commingled DS1 COCI			XDH1X, NTCD1	UC1D1	13.47	6.58	4.72								
		Commingled DS1 Interoffice Channel			XDH1X	U1TF1	60.16	89.27	81.81	16.35	14.44						
		Commingled DS1 Interoffice Channel Mileage			XDH1X	1L5XX	0.18										
		Commingled DS1/DS0 Channel System			XDH1X	MQ1	107.19	91.04	62.57	10.54	9.79						
		Commingled DS1 Local Loop Zone 1		1	XDH1X	USLXX	82.55	252.47	157.54	44.70	11.71						
		Commingled DS1 Local Loop Zone 2		2	XDH1X	USLXX	154.18	252.47	157.54	44.70	11.71						
		Commingled DS1 Local Loop Zone 3		3	XDH1X	USLXX	314.52	252.47	157.54	44.70	11.71						
		Commingled DS3 Local Loop			HFQC6	UE3PX	308.08	451.52	263.94	119.49	83.58						
		Commingled DS3/STS-1 Local Loop Mileage			HFQC6, HFRST	1L5ND	8.38										
		Commingled STS-1 Local Loop			HFRST	UDLS1	319.83	451.52	263.94	119.49	83.58						
		Commingled DS3/DS1 Channel System			HFQC6	MQ3	176.20	178.14	93.97	33.26	31.83						
		Commingled DS3 Interoffice Channel			HFQC6	U1TF3	703.52	278.75	162.76	60.20	58.46						
		Commingled DS3 Interoffice Channel Mileage			HFQC6	1L5XX	4.09										
		Commingled STS-1Interoffice Channel			HFRST	U1TFS	701.37	278.75	162.76	60.20	58.46						
		Commingled STS-1Interoffice Channel Mileage			HFRST	1L5XX	4.09										
		Commingled Dark Fiber - Interoffice Transport, Per Four Fiber Strands, Per Route Mile Or Fraction Thereof			HEQDL	1L5DF	22.34										
		Commingled Dark Fiber - Interoffice Transport, Per Four Fiber Strands, Per Route Mile Or Fraction Thereof			HEQDL	UDF14		639.09	137.87	317.06	197.66						
		UNE to Commingled Conversion Tracking			XDH1X, HFQC6	CMGUN	0.00	0.00	0.00	0.00	0.00						
		SPA to Commingled Conversion Tracking			XDH1X, HFQC6	CMGSP	0.00	0.00	0.00	0.00	0.00						
LNP Query Service																	
		LNP Charge Per query					0.000757										
		LNP Service Establishment Manual						12.52		11.51							
		LNP Service Provisioning with Point Code Establishment						593.49	303.20	268.93	197.74						
911 PBX LOCATE																	
	911 PBX LOCATE DATABASE CAPABILITY																
		Service Establishment per CLEC per End User Account			9PBDC	9PBEU		1,813.00									
		Changes to TN Range or Customer Profile			9PBDC	9PBTN		181.44									
		Per Telephone Number (Monthly)			9PBDC	9PBMM	0.07										
		Change Company (Service Provider) ID			9PBDC	9PBPC		532.60									
		PBX Locate Service Support per CLEC (MonthIt)			9PBDC	9PBMR	181.33										
		Service Order Charge			9PBDC	9PBSC		15.66									
	911 PBX LOCATE TRANSPORT COMPONENT																
	See Att 3																
	Note: Rates displaying an "I" in Interim column are interim as a result of a Commission order.																

UNBUNDLED NETWORK ELEMENTS - Florida														Attachment: 2 Exh A			
CATEGORY	RATE ELEMENTS	Interim	Zone	BCS	USOC	RATES($)					Svc Order Submitted Elec per LSR	Svc Order Submitted Manually per LSR	Incremental Charge - Manual Svc Order vs. Electronic-1st	Incremental Charge - Manual Svc Order vs. Electronic-Add'l	Incremental Charge - Manual Svc Order vs. Electronic-Disc 1st	Incremental Charge - Manual Svc Order vs. Electronic-Disc Add'l
						Rec	Nonrecurring		Nonrecurring Disconnect		OSS Rates($)					
							First	Add'l	First	Add'l	SOMEC	SOMAN	SOMAN	SOMAN	SOMAN	SOMAN
	The "Zone" shown in the sections for stand-alone loops or loops as part of a combination refers to Geographically Deaveraged UNE Zones. To view Geographically Deaveraged UNE Zone Designations by Central Office, refer to internet Website: http://www.interconnection.bellsouth.com/become_a_clec/html/interconnection.htm															
OPERATIONS SUPPORT SYSTEMS (OSS) - "REGIONAL RATES"																
	NOTE: (1) CLEC should contact its contract negotiator if it prefers the "state specific" OSS charges as ordered by the State Commissions. The OSS charges currently contained in this rate exhibit are the BellSouth "regional" service ordering charges. CLEC may elect either the state specific Commission ordered rates for the service ordering charges, or CLEC may elect the regional service ordering charge, however, CLEC can not obtain a mixture of the two regardless if CLEC has a interconnection contract established in each of the 9 states.															
	NOTE: (2) Any element that can be ordered electronically will be billed according to the SOMEC rate listed in this category. Please refer to BellSouth's Local Ordering Handbook (LOH) to determine if a product can be ordered electronically. For those elements that cannot be ordered electronically at present per the LOH, the listed SOMEC rate in this category reflects the charge that would be billed to a CLEC once electronic ordering capabilities come on-line for that element. Otherwise, the manual ordering charge, SOMAN, will be applied to a CLECs bill when it submits an LSR to BellSouth.															
	OSS - Electronic Service Order Charge, Per Local Service Request (LSR) - UNE Only				SOMEC		3.50	0.00	3.50	0.00						
	OSS - Manual Service Order Charge, Per Local Service Request (LSR) - UNE Only				SOMAN		11.90	0.00	1.83	0.00						
UNE SERVICE DATE ADVANCEMENT CHARGE																
	NOTE: The Expedite charge will be maintained commensurate with BellSouth's FCC No.1 Tariff, Section 5 as applicable.															
	UNE Expedite Charge per Circuit or Line Assignable USOC, per Day			UAL, UEANL, UCL, UEF, UDF, UEQ, UDL, UENTW, UDN, UEA, UHL, ULC, USL, U1T12, U1T48, U1TD1, U1TD3, U1TDX, U1TO3, U1TS1, U1TVX, UC1BC, UC1BL, UC1CC, UC1CL, UC1DC, UC1DL, UC1EC, UC1EL, UC1FC, UC1FL, UC1GC, UC1GL, UC1HC, UC1HL, UDL12, UDL48, UDLO3, UDLSX, UE3, ULD12, ULD48, ULDD1, ULDD3, ULDDX, ULDO3, ULDS1, ULDVX, UNC1X, UNC3X, UNCDX, UNCNX, UNCSX, UNCVX, UNLD1, UNLD3, UXTD1, UXTD3, UXTS1, U1TUC, U1TUD, U1TUB, U1TUA,NTCVG, NTCUD, NTCD1	SDASP		200.00									
ORDER MODIFICATION CHARGE																
	Order Modification Charge (OMC)						26.21	0.00	0.00	0.00						
	Order Modification Additional Dispatch Charge (OMCAD)						150.00	0.00	0.00	0.00						
UNBUNDLED EXCHANGE ACCESS LOOP																
	2-WIRE ANALOG VOICE GRADE LOOP															
	2-Wire Analog Voice Grade Loop - Service Level 1- Zone 1		1	UEANL	UEAL2	10.69	49.57	22.83	25.62	6.57						
	2-Wire Analog Voice Grade Loop - Service Level 1- Zone 2		2	UEANL	UEAL2	15.20	49.57	22.83	25.62	6.57						
	2-Wire Analog Voice Grade Loop - Service Level 1- Zone 3		3	UEANL	UEAL2	26.97	49.57	22.83	25.62	6.57						
	2-Wire Analog Voice Grade Loop - Service Level 1- Zone 1		1	UEANL	UEASL	10.69	49.57	22.83	25.62	6.57						
	2-Wire Analog Voice Grade Loop - Service Level 1- Zone 2		2	UEANL	UEASL	15.20	49.57	22.83	25.62	6.57						
	2-Wire Analog Voice Grade Loop - Service Level 1- Zone 3		3	UEANL	UEASL	26.97	49.57	22.83	25.62	6.57						

UNBUNDLED NETWORK ELEMENTS - Florida													Attachment: 2 Exh A			
CATEGORY	RATE ELEMENTS	Interim	Zone	BCS	USOC	RATES($)					Svc Order Submitted Elec per LSR	Svc Order Submitted Manually per LSR	Incremental Charge - Manual Svc Order vs. Electronic-1st	Incremental Charge - Manual Svc Order vs. Electronic-Add'l	Incremental Charge - Manual Svc Order vs. Electronic-Disc 1st	Incremental Charge - Manual Svc Order vs. Electronic-Disc Add'l
						Rec	Nonrecurring		Nonrecurring Disconnect		OSS Rates($)					
							First	Add'l	First	Add'l	SOMEC	SOMAN	SOMAN	SOMAN	SOMAN	SOMAN
	Tag Loop at End User Premise			UEANL	URETL		8.93	0.88								
	Loop Testing - Basic 1st Half Hour			UEANL	URET1		77.09	0.00								
	Loop Testing - Basic Additional Half Hour			UEANL	URETA		33.12	33.12								
	Manual Order Coordination for UVL-SL1s (per loop)			UEANL	UEAMC		9.00	9.00								
	Order Coordination for Specified Conversion Time for UVL-SL1 (per LSR)			UEANL	OCOSL		23.02									
	Unbundled Non-Design Voice Loop, billing for BST providing make-up (Engineering Information - E.I.)			UEANL	UEANM		13.49									
	CLEC to CLEC Conversion Charge Without Outside Dispatch (UVL-SL1)			UEANL	UREWO		15.78	8.94	25.62	6.57						
	Bulk Migration, per 2 Wire Voice Loop-SL1			UEANL	UREPN		49.57	22.83	25.62	6.57						
	Bulk Migration Order Coordination, per 2 Wire Voice Loop-SL1			UEANL	UREPM		9.00	9.00								
2-WIRE Unbundled COPPER LOOP																
	2-Wire Unbundled Copper Loop - Non-Designed Zone 1		1	UEQ	UEQ2X	7.69	44.98	20.90	24.88	6.45						
	2 Wire Unbundled Copper Loop - Non-Designed - Zone 2		2	UEQ	UEQ2X	10.92	44.98	20.90	24.88	6.45						
	2 Wire Unbundled Copper Loop - Non-Designed - Zone 3		3	UEQ	UEQ2X	19.38	44.98	20.90	24.88	6.45						
	Tag Loop at End User Premise			UEQ	URETL		8.93	0.88								
	Loop Testing - Basic 1st Half Hour			UEQ	URET1		48.65	0.00								
	Loop Testing - Basic Additional Half Hour			UEQ	URETA		23.95	23.95								
	Manual Order Coordination 2 Wire Unbundled Copper Loop - Non-Designed (per loop)			UEQ	USBMC		9.00	9.00								
	Unbundled Copper Loop - Non-Design, billing for BST providing make-up (Engineering Information - E.I.)			UEQ	UEQMU		13.49									
	CLEC to CLEC Conversion Charge Without Outside Dispatch (UCL-ND)			UEQ	UREWO		14.27	7.43	24.88	6.45						
	Bulk Migration, per 2 Wire UCL-ND			UEQ	UREPN		44.98	20.90	24.88	6.45						
	Bulk Migration Order Coordination, per 2 Wire UCL-ND			UEQ	UREPM		9.00	9.00								
UNBUNDLED EXCHANGE ACCESS LOOP																
2-WIRE ANALOG VOICE GRADE LOOP																
	2-Wire Analog Voice Grade Loop - Service Level 2 w/Loop or Ground Start Signaling - Zone 1		1	UEA	UEAL2	12.24	135.75	82.47	63.53	12.01						
	2-Wire Analog Voice Grade Loop - Service Level 2 w/Loop or Ground Start Signaling - Zone 2		2	UEA	UEAL2	17.40	135.75	82.47	63.53	12.01						
	2-Wire Analog Voice Grade Loop - Service Level 2 w/Loop or Ground Start Signaling - Zone 3		3	UEA	UEAL2	30.87	135.75	82.47	63.53	12.01						
	2-Wire Analog Voice Grade Loop - Service Level 2 w/Reverse Battery Signaling - Zone 1		1	UEA	UEAR2	12.24	135.75	82.47	63.53	12.01						
	2-Wire Analog Voice Grade Loop - Service Level 2 w/Reverse Battery Signaling - Zone 2		2	UEA	UEAR2	17.40	135.75	82.47	63.53	12.01						
	2-Wire Analog Voice Grade Loop - Service Level 2 w/Reverse Battery Signaling - Zone 3		3	UEA	UEAR2	30.87	135.75	82.47	63.53	12.01						
	Switch-As-Is Conversion rate per UNE Loop, Single LSR, (per DS0)			UEA	URESL		8.98	8.98								
	Switch-As-Is Conversion rate per UNE Loop, Spreadsheet, (per DS0)			UEA	URESP		8.98	8.98								
	CLEC to CLEC Conversion Charge without outside dispatch			UEA	UREWO		87.71	36.35								
	Loop Tagging - Service Level 2 (SL2)			UEA	URETL		11.21	1.10								
	Bulk Migration, per 2 Wire Voice Loop-SL2			UEA	UREPN		135.75	82.47								
	Bulk Migration Order Coordination, per 2 Wire Voice Loop-SL2			UEA	UREPM		0.00	0.00								
4-WIRE ANALOG VOICE GRADE LOOP																
	4-Wire Analog Voice Grade Loop - Zone 1		1	UEA	UEAL4	18.89	167.86	115.15	67.08	15.56						
	4-Wire Analog Voice Grade Loop - Zone 2		2	UEA	UEAL4	26.84	167.86	115.15	67.08	15.56						
	4-Wire Analog Voice Grade Loop - Zone 3		3	UEA	UEAL4	47.62	167.86	115.15	67.08	15.56						
	Switch-As-Is Conversion rate per UNE Loop, Single LSR, (per DS0)			UEA	URESL		8.98	8.98								
	Switch-As-Is Conversion rate per UNE Loop, Spreadsheet, (per DS0)			UEA	URESP		8.98	8.98								
	CLEC to CLEC Conversion Charge without outside dispatch			UEA	UREWO		87.71	36.35								
2-WIRE ISDN DIGITAL GRADE LOOP																

CATEGORY	RATE ELEMENTS	Interim	Zone	BCS	USOC	RATES($)					Svc Order Submitted Elec per LSR	Svc Order Submitted Manually per LSR	Incremental Charge - Manual Svc Order vs. Electronic-1st	Incremental Charge - Manual Svc Order vs. Electronic-Add'l	Incremental Charge - Manual Svc Order vs. Electronic-Disc 1st	Incremental Charge - Manual Svc Order vs. Electronic-Disc Add'l
						Rec	Nonrecurring		Nonrecurring Disconnect		OSS Rates($)					
							First	Add'l	First	Add'l	SOMEC	SOMAN	SOMAN	SOMAN	SOMAN	SOMAN
	2-Wire ISDN Digital Grade Loop - Zone 1		1	UDN	U1L2X	19.28	147.69	94.41	62.23	10.71						
	2-Wire ISDN Digital Grade Loop - Zone 2		2	UDN	U1L2X	27.40	147.69	94.41	62.23	10.71						
	2-Wire ISDN Digital Grade Loop - Zone 3		3	UDN	U1L2X	48.62	147.69	94.41	62.23	10.71						
	CLEC to CLEC Conversion Charge without outside dispatch			UDN	UREWO		91.61	44.15								
	2-WIRE ASYMMETRICAL DIGITAL SUBSCRIBER LINE (ADSL) COMPATIBLE LOOP															
	2 Wire Unbundled ADSL Loop including manual service inquiry & facility reservation - Zone 1		1	UAL	UAL2X	8.30	149.53	103.85	75.05	15.63						
	2 Wire Unbundled ADSL Loop including manual service inquiry & facility reservation - Zone 2		2	UAL	UAL2X	11.80	149.53	103.85	75.05	15.63						
	2 Wire Unbundled ADSL Loop including manual service inquiry & facility reservation - Zone 3		3	UAL	UAL2X	20.94	149.53	103.85	75.05	15.63						
	2 Wire Unbundled ADSL Loop without manual service inquiry & facility reservaton - Zone 1		1	UAL	UAL2W	8.30	124.83	71.12	60.64	9.12						
	2 Wire Unbundled ADSL Loop without manual service inquiry & facility reservaton - Zone 2		2	UAL	UAL2W	11.80	124.83	71.12	60.64	9.12						
	2 Wire Unbundled ADSL Loop without manual service inquiry & facility reservaton - Zone 3		3	UAL	UAL2W	20.94	124.83	71.12	60.64	9.12						
	CLEC to CLEC Conversion Charge without outside dispatch			UAL	UREWO		86.19	40.39								
	2-WIRE HIGH BIT RATE DIGITAL SUBSCRIBER LINE (HDSL) COMPATIBLE LOOP															
	2 Wire Unbundled HDSL Loop including manual service inquiry & facility reservation - Zone 1		1	UHL	UHL2X	7.22	159.09	113.41	75.05	15.63						
	2 Wire Unbundled HDSL Loop including manual service inquiry & facility reservation - Zone 2		2	UHL	UHL2X	10.26	159.09	113.41	75.05	15.63						
	2 Wire Unbundled HDSL Loop including manual service inquiry & facility reservation - Zone 3		3	UHL	UHL2X	18.21	159.09	113.41	75.05	15.63						
	2 Wire Unbundled HDSL Loop without manual service inquiry and facility reservation - Zone 1		1	UHL	UHL2W	7.22	134.40	80.69	60.64	9.12						
	2 Wire Unbundled HDSL Loop without manual service inquiry and facility reservation - Zone 2		2	UHL	UHL2W	10.26	134.40	80.69	60.64	9.12						
	2 Wire Unbundled HDSL Loop without manual service inquiry and facility reservation - Zone 3		3	UHL	UHL2W	18.21	134.40	80.69	60.64	9.12						
	CLEC to CLEC Conversion Charge without outside dispatch			UHL	UREWO		86.12	40.39								
	4-WIRE HIGH BIT RATE DIGITAL SUBSCRIBER LINE (HDSL) COMPATIBLE LOOP															
	4 Wire Unbundled HDSL Loop including manual service inquiry and facility reservation - Zone 1		1	UHL	UHL4X	10.86	193.31	138.98	77.15	12.61						
	4-Wire Unbundled HDSL Loop including manual service inquiry and facility reservation - Zone 2		2	UHL	UHL4X	15.44	193.31	138.98	77.15	12.61						
	4-Wire Unbundled HDSL Loop including manual service inquiry and facility reservation - Zone 3		3	UHL	UHL4X	27.39	193.31	138.98	77.15	12.61						
	4-Wire Unbundled HDSL Loop without manual service inquiry and facility reservation - Zone 1		1	UHL	UHL4W	10.86	168.62	115.47	62.74	11.22						
	4-Wire Unbundled HDSL Loop without manual service inquiry and facility reservation - Zone 2		2	UHL	UHL4W	15.44	168.62	115.47	62.74	11.22						
	4-Wire Unbundled HDSL Loop without manual service inquiry and facility reservation - Zone 3		3	UHL	UHL4W	27.39	168.62	115.47	62.74	11.22						
	CLEC to CLEC Conversion Charge without outside dispatch			UHL	UREWO		86.12	40.39								
	4-WIRE DS1 DIGITAL LOOP															
	4-Wire DS1 Digital Loop - Zone 1		1	USL	USLXX	70.74	313.75	181.48	61.22	13.53						
	4-Wire DS1 Digital Loop - Zone 2		2	USL	USLXX	100.54	313.75	181.48	61.22	13.53						
	4-Wire DS1 Digital Loop - Zone 3		3	USL	USLXX	178.39	313.75	181.48	61.22	13.53						
	Switch-As-Is Conversion rate per UNE Loop, Single LSR, (per DS1)			USL	URESL		8.98	8.98								
	Switch-As-Is Conversion rate per UNE Loop, Spreadsheet, (per DS1)			USL	URESP		8.98	8.98								
	CLEC to CLEC Conversion Charge without outside dispatch			USL	UREWO		101.07	43.04								
	4-WIRE 19.2, 56 OR 64 KBPS DIGITAL GRADE LOOP															
	4 Wire Unbundled Digital Loop 2.4 Kbps - Zone 1		1	UDL	UDL2X	22.20	161.56	108.85	67.08	15.56						
	4 Wire Unbundled Digital Loop 2.4 Kbps - Zone 2		2	UDL	UDL2X	31.56	161.56	108.85	67.08	15.56						
	4 Wire Unbundled Digital Loop 2.4 Kbps - Zone 3		3	UDL	UDL2X	55.99	161.56	108.85	67.08	15.56						

UNBUNDLED NETWORK ELEMENTS - Florida

Attachment: 2 Exh A

CATEGORY	RATE ELEMENTS	Interim	Zone	BCS	USOC	RATES($)					Svc Order Submitted Elec per LSR	Svc Order Submitted Manually per LSR	Incremental Charge - Manual Svc Order vs. Electronic-1st	Incremental Charge - Manual Svc Order vs. Electronic-Add'l	Incremental Charge - Manual Svc Order vs. Electronic-Disc 1st	Incremental Charge - Manual Svc Order vs. Electronic-Disc Add'l
						Rec	Nonrecurring		Nonrecurring Disconnect		OSS Rates($)					
							First	Add'l	First	Add'l	SOMEC	SOMAN	SOMAN	SOMAN	SOMAN	SOMAN
	4 Wire Unbundled Digital Loop 4.8 Kbps - Zone 1		1	UDL	UDL4X	22.20	161.56	108.85	67.08	15.56						
	4 Wire Unbundled Digital Loop 4.8 Kbps - Zone 2		2	UDL	UDL4X	31.56	161.56	108.85	67.08	15.56						
	4 Wire Unbundled Digital Loop 4.8 Kbps - Zone 3		3	UDL	UDL4X	55.99	161.56	108.85	67.08	15.56						
	4 Wire Unbundled Digital Loop 9.6 Kbps - Zone 1		1	UDL	UDL9X	22.20	161.56	108.85	67.08	15.56						
	4 Wire Unbundled Digital Loop 9.6 Kbps - Zone 2		2	UDL	UDL9X	31.56	161.56	108.85	67.08	15.56						
	4 Wire Unbundled Digital Loop 9.6 Kbps - Zone 3		3	UDL	UDL9X	55.99	161.56	108.85	67.08	15.56						
	4 Wire Unbundled Digital 19.2 Kbps - Zone 1		1	UDL	UDL19	22.20	161.56	108.85	67.08	15.56						
	4 Wire Unbundled Digital 19.2 Kbps - Zone 2		2	UDL	UDL19	31.56	161.56	108.85	67.08	15.56						
	4 Wire Unbundled Digital 19.2 Kbps - Zone 3		3	UDL	UDL19	55.99	161.56	108.85	67.08	15.56						
	4 Wire Unbundled Digital Loop 56 Kbps - Zone 1		1	UDL	UDL56	22.20	161.56	108.85	67.08	15.56						
	4 Wire Unbundled Digital Loop 56 Kbps - Zone 2		2	UDL	UDL56	31.56	161.56	108.85	67.08	15.56						
	4 Wire Unbundled Digital Loop 56 Kbps - Zone 3		3	UDL	UDL56	55.99	161.56	108.85	67.08	15.56						
	4 Wire Unbundled Digital Loop 64 Kbps - Zone 1		1	UDL	UDL64	22.20	161.56	108.85	67.08	15.56						
	4 Wire Unbundled Digital Loop 64 Kbps - Zone 2		2	UDL	UDL64	31.56	161.56	108.85	67.08	15.56						
	4 Wire Unbundled Digital Loop 64 Kbps - Zone 3		3	UDL	UDL64	55.99	161.56	108.85	67.08	15.56						
	Switch-As-Is Conversion rate per UNE Loop, Single LSR, (per DS0)			UDL	URESL		8.98	8.98								
	Switch-As-Is Conversion rate per UNE Loop, Spreadsheet, (per DS0)			UDL	URESP		8.98	8.98								
	CLEC to CLEC Conversion Charge without outside dispatch			UDL	UREWO		102.11	49.74								
2-WIRE Unbundled COPPER LOOP																
	2-Wire Unbundled Copper Loop-Designed including manual service inquiry & facility reservation - Zone 1		1	UCL	UCLPB	8.30	148.50	102.82	75.05	15.63						
	2-Wire Unbundled Copper Loop-Designed including manual service inquiry & facility reservation - Zone 2		2	UCL	UCLPB	11.80	148.50	102.82	75.05	15.63						
	2 Wire Unbundled Copper Loop-Designed including manual service inquiry & facility reservation - Zone 3		3	UCL	UCLPB	20.94	148.50	102.82	75.05	15.63						
	2-Wire Unbundled Copper Loop-Designed without manual service inquiry and facility reservation - Zone 1		1	UCL	UCLPW	8.30	123.81	70.09	60.64	9.12						
	2-Wire Unbundled Copper Loop-Designed without manual service inquiry and facility reservation - Zone 2		2	UCL	UCLPW	11.80	123.81	70.09	60.64	9.12						
	2-Wire Unbundled Copper Loop-Designed without manual service inquiry and facility reservation - Zone 3		3	UCL	UCLPW	20.94	123.81	70.09	60.64	9.12						
	CLEC to CLEC Conversion Charge without outside dispatch (UCL -Des)			UCL	UREWO		97.21	42.47								
	Order Coordination for Unbundled Copper Loops (per loop)			UCL	UCLMC		9.00	9.00								
4-WIRE COPPER LOOP																
	4-Wire Copper Loop-Designed including manual service inquiry and facility reservation - Zone 1		1	UCL	UCL4S	11.83	177.87	132.76	77.15	17.73						
	4-Wire Copper Loop-Designed including manual service inquiry and facility reservation - Zone 2		2	UCL	UCL4S	16.81	177.87	132.76	77.15	17.73						
	4-Wire Copper Loop-Designed including manual service inquiry and facility reservation - Zone 3		3	UCL	UCL4S	29.82	177.87	132.76	77.15	17.73						
	4-Wire Copper Loop-Designed without manual service inquiry and facility reservation - Zone 1		1	UCL	UCL4W	11.83	153.18	100.03	62.74	11.22						
	4-Wire Copper Loop-Designed without manual service inquiry and facility reservation - Zone 2		2	UCL	UCL4W	16.81	153.18	100.03	62.74	11.22						
	4-Wire Copper Loop-Designed without manual service inquiry and facility reservation - Zone 3		3	UCL	UCL4W	29.82	153.18	100.03	62.74	11.22						
	Order Coordination for Unbundled Copper Loops (per loop)			UCL	UCLMC		9.00	9.00								
	CLEC to CLEC Conversion Charge without outside dispatch			UCL	UREWO		97.21	42.47								
	Order Coordination for Specified Conversion Time (per LSR)			UEA, UDN, UAL, UHL, UDL,USL	OCOSL		23.02									
Rearrangements																
	EEL to UNE-L Retermination, per 2 Wire Unbundled Voice Loop-SL2			UEA	UREEL		87.71	36.35								
	EEL to UNE-L Retermination, per 4 Wire Unbundled Voice Loop			UEA	UREEL		87.71	36.35								
	EEL to UNE-L Retermination, per 2 Wire ISDN Loop			UDN	UREEL		91.61	44.15								

CATEGORY	RATE ELEMENTS	Interim	Zone	BCS	USOC	RATES($)					Svc Order Submitted Elec per LSR	Svc Order Submitted Manually per LSR	Incremental Charge - Manual Svc Order vs. Electronic-1st	Incremental Charge - Manual Svc Order vs. Electronic-Add'l	Incremental Charge - Manual Svc Order vs. Electronic-Disc 1st	Incremental Charge - Manual Svc Order vs. Electronic-Disc Add'l
						Rec	Nonrecurring		Nonrecurring Disconnect		OSS Rates($)					
							First	Add'l	First	Add'l	SOMEC	SOMAN	SOMAN	SOMAN	SOMAN	SOMAN
	EEL to UNE-L Retermination, per 4 Wire Unbundled Digital Loop			UDL	UREEL		102.11	49.74								
	EEL to UNE-L Retermination, per 4 Wire Unbundled DS1 Loop			USL	UREEL		101.07	43.04								
UNE LOOP COMMINGLING																
2-WIRE ANALOG VOICE GRADE LOOP - COMMINGLING																
	2-Wire Analog Voice Grade Loop - Service Level 2 w/Loop or Ground Start Signaling - Zone 1		1	NTCVG	UEAL2	12.24	135.75	82.47	63.53	12.01						
	2-Wire Analog Voice Grade Loop - Service Level 2 w/Loop or Ground Start Signaling - Zone 2		2	NTCVG	UEAL2	17.40	135.75	82.47	63.53	12.01						
	2-Wire Analog Voice Grade Loop - Service Level 2 w/Loop or Ground Start Signaling - Zone 3		3	NTCVG	UEAL2	30.87	135.75	82.47	63.53	12.01						
	2-Wire Analog Voice Grade Loop - Service Level 2 w/Reverse Battery Signaling - Zone 1		1	NTCVG	UEAR2	12.24	135.75	82.47	63.53	12.01						
	2-Wire Analog Voice Grade Loop - Service Level 2 w/Reverse Battery Signaling - Zone 2		2	NTCVG	UEAR2	17.40	135.75	82.47	63.53	12.01						
	2-Wire Analog Voice Grade Loop - Service Level 2 w/Reverse Battery Signaling - Zone 3		3	NTCVG	UEAR2	30.87	135.75	82.47	63.53	12.01						
	Switch-As-Is Conversion rate per UNE Loop, Single LSR, (per DS0)			NTCVG	URESL		8.98	8.98								
	Switch-As-Is Conversion rate per UNE Loop, Spreadsheet, (per DS0)			NTCVG	URESP		8.98	8.98								
	CLEC to CLEC Conversion Charge without outside dispatch			NTCVG	UREWO		87.71	36.35								
	Loop Tagging - Service Level 2 (SL2)			NTCVG	URETL		11.21	1.10								
4-WIRE ANALOG VOICE GRADE LOOP - COMMINGLING																
	4-Wire Analog Voice Grade Loop - Zone 1		1	NTCVG	UEAL4	18.89	167.86	115.15	67.08	15.56						
	4-Wire Analog Voice Grade Loop - Zone 2		2	NTCVG	UEAL4	26.84	167.86	115.15	67.08	15.56						
	4-Wire Analog Voice Grade Loop - Zone 3		3	NTCVG	UEAL4	47.62	167.86	115.15	67.08	15.56						
	Switch-As-Is Conversion rate per UNE Loop, Single LSR, (per DS0)			NTCVG	URESL		8.98	8.98								
	Switch-As-Is Conversion rate per UNE Loop, Spreadsheet, (per DS0)			NTCVG	URESP		8.98	8.98								
	CLEC to CLEC Conversion Charge without outside dispatch			NTCVG	UREWO		87.71	36.35								
4-WIRE DS1 DIGITAL LOOP - COMMINGLING																
	4-Wire DS1 Digital Loop - Zone 1		1	NTCD1	USLXX	70.74	313.75	181.48	61.22	13.53						
	4-Wire DS1 Digital Loop - Zone 2		2	NTCD1	USLXX	100.54	313.75	181.48	61.22	13.53						
	4-Wire DS1 Digital Loop - Zone 3		3	NTCD1	USLXX	178.39	313.75	181.48	61.22	13.53						
	Switch-As-Is Conversion rate per UNE Loop, Single LSR, (per DS1)			NTCD1	URESL		8.98	8.98								
	Switch-As-Is Conversion rate per UNE Loop, Spreadsheet, (per DS1)			NTCD1	URESP		8.98	8.98								
	CLEC to CLEC Conversion Charge without outside dispatch			NTCD1	UREWO		101.07	43.04								
4-WIRE 19.2, 56 OR 64 KBPS DIGITAL GRADE LOOP - COMMINGLING																
	3 Wire Unbundled Digital Loop 2.4 Kbps - Zone 1		1	NTCUD	UDL2X	22.20	161.56	108.85	67.08	15.56						
	4 Wire Unbundled Digital Loop 2.4 Kbps - Zone 2		2	NTCUD	UDL2X	31.56	161.56	108.85	67.08	15.56						
	4 Wire Unbundled Digital Loop 2.4 Kbps - Zone 3		3	NTCUD	UDL2X	55.99	161.56	108.85	67.08	15.56						
	4 Wire Unbundled Digital Loop 4.8 Kbps - Zone 1		1	NTCUD	UDL4X	22.20	161.56	108.85	67.08	15.56						
	4 Wire Unbundled Digital Loop 4.8 Kbps - Zone 2		2	NTCUD	UDL4X	31.56	161.56	108.85	67.08	15.56						
	4 Wire Unbundled Digital Loop 4.8 Kbps - Zone 3		3	NTCUD	UDL4X	55.99	161.56	108.85	67.08	15.56						
	4 Wire Unbundled Digital Loop 9.6 Kbps - Zone 1		1	NTCUD	UDL9X	22.20	161.56	108.85	67.08	15.56						
	4 Wire Unbundled Digital Loop 9.6 Kbps - Zone 2		2	NTCUD	UDL9X	31.56	161.56	108.85	67.08	15.56						
	4 Wire Unbundled Digital Loop 9.6 Kbps - Zone 3		3	NTCUD	UDL9X	55.99	161.56	108.85	67.08	15.56						
	4 Wire Unbundled Digital 19.2 Kbps - Zone 1		1	NTCUD	UDL19	22.20	161.56	108.85	67.08	15.56						
	4 Wire Unbundled Digital 19.2 Kbps - Zone 2		2	NTCUD	UDL19	31.56	161.56	108.85	67.08	15.56						
	4 Wire Unbundled Digital 19.2 Kbps - Zone 3		3	NTCUD	UDL19	55.99	161.56	108.85	67.08	15.56						
	4 Wire Unbundled Digital Loop 56 Kbps - Zone 1		1	NTCUD	UDL56	22.20	161.56	108.85	67.08	15.56						
	4 Wire Unbundled Digital Loop 56 Kbps - Zone 2		2	NTCUD	UDL56	31.56	161.56	108.85	67.08	15.56						
	4 Wire Unbundled Digital Loop 56 Kbps - Zone 3		3	NTCUD	UDL56	55.99	161.56	108.85	67.08	15.56						
	4 Wire Unbundled Digital Loop 64 Kbps - Zone 1		1	NTCUD	UDL64	22.20	161.56	108.85	67.08	15.56						
	4 Wire Unbundled Digital Loop 64 Kbps - Zone 2		2	NTCUD	UDL64	31.56	161.56	108.85	67.08	15.56						

CATEGORY	RATE ELEMENTS	Interim	Zone	BCS	USOC	RATES($)					Svc Order Submitted Elec per LSR	Svc Order Submitted Manually per LSR	Incremental Charge - Manual Svc Order vs. Electronic-1st	Incremental Charge - Manual Svc Order vs. Electronic-Add'l	Incremental Charge - Manual Svc Order vs. Electronic-Disc 1st	Incremental Charge - Manual Svc Order vs. Electronic-Disc Add'l
						Rec	Nonrecurring		Nonrecurring Disconnect		OSS Rates($)					
							First	Add'l	First	Add'l	SOMEC	SOMAN	SOMAN	SOMAN	SOMAN	SOMAN
	4 Wire Unbundled Digital Loop 64 Kbps - Zone 3		3	NTCUD	UDL64	55.99	161.56	108.85	67.08	15.56						
	Switch-As-Is Conversion rate per UNE Loop, Single LSR, (per DS0)			NTCUD	URESL		8.98	8.98								
	Switch-As-Is Conversion rate per UNE Loop, Spreadsheet, (per DS0)			NTCUD	URESP		8.98	8.98								
	CLEC to CLEC Conversion Charge without outside dispatch			NTCUD	UREWO		102.11	49.74								
	Order Coordination for Specified Conversion Time (per LSR)			NTCVG, NTCUD, NTCD1	OCOSL		23.02									
LOOP MODIFICATION																
	Unbundled Loop Modification, Removal of Load Coils - 2 Wire pair less than or equal to 18k ft, per Unbundled Loop			UAL, UHL, UCL, UEQ, ULS, UEA, UEANL, UEPSR, UEPSB	ULM2L		0.00	0.00								
	Unbundled Loop Modification Removal of Load Coils - 4 Wire less than or equal to 18K ft, per Unbundled Loop			UHL, UCL, UEA	ULM4L		0.00	0.00								
	Unbundled Loop Modification Removal of Bridged Tap Removal, per unbundled loop			UAL, UHL, UCL, UEQ, ULS, UEA, UEANL, UEPSR, UEPSB	ULMBT		10.52	10.52								
SUB-LOOPS																
Sub-Loop Distribution																
	Sub-Loop - Per Cross Box Location - CLEC Feeder Facility Set-Up			UEANL, UEF	USBSA		487.23									
	Sub-Loop - Per Cross Box Location - Per 25 Pair Panel Set-Up			UEANL, UEF	USBSB		6.25									
	Sub-Loop - Per Building Equipment Room - CLEC Feeder Facility Set-Up			UEANL	USBSC		169.25									
	Sub-Loop - Per Building Equipment Room - Per 25 Pair Panel Set-Up			UEANL	USBSD		38.65									
	Sub-Loop Distribution Per 2-Wire Analog Voice Grade Loop - Zone 1		1	UEANL	USBN2	6.46	60.19	21.78	47.50	5.26						
	Sub-Loop Distribution Per 2-Wire Analog Voice Grade Loop - Zone 2		2	UEANL	USBN2	9.18	60.19	21.78	47.50	5.26						
	Sub-Loop Distribution Per 2-Wire Analog Voice Grade Loop - Zone 3		3	UEANL	USBN2	16.29	60.19	21.78	47.50	5.26						
	Order Coordination for Unbundled Sub-Loops, per sub-loop pair			UEANL	USBMC		9.00	9.00								
	Sub-Loop Distribution Per 4-Wire Analog Voice Grade Loop - Zone 1		1	UEANL	USBN4	7.37	68.83	30.42	49.71	6.60						
	Sub-Loop Distribution Per 4-Wire Analog Voice Grade Loop - Zone 2		2	UEANL	USBN4	10.47	68.83	30.42	49.71	6.60						
	Sub-Loop Distribution Per 4-Wire Analog Voice Grade Loop - Zone 3		3	UEANL	USBN4	18.58	68.83	30.42	49.71	6.60						
	Order Coordination for Unbundled Sub-Loops, per sub-loop pair			UEANL	USBMC		9.00	9.00								
	Sub-Loop 2-Wire Intrabuilding Network Cable (INC)			UEANL	USBR2	3.96	51.84	13.44	47.50	5.26						
	Order Coordination for Unbundled Sub-Loops, per sub-loop pair			UEANL	USBMC		9.00	9.00								
	Sub-Loop 4-Wire Intrabuilding Network Cable (INC)			UEANL	USBR4	9.37	55.91	17.51	49.71	6.60						
	Order Coordination for Unbundled Sub-Loops, per sub-loop pair			UEANL	USBMC		9.00	9.00								
	Loop Testing - Basic 1st Half Hour			UEANL	URET1		77.09	0.00								
	Loop Testing - Basic Additional Half Hour			UEANL	URETA		33.12	33.12								
	2 Wire Copper Unbundled Sub-Loop Distribution - Zone 1		1	UEF	UCS2X	5.15	60.19	21.78	47.50	5.26						
	2 Wire Copper Unbundled Sub-Loop Distribution - Zone 2		2	UEF	UCS2X	7.31	60.19	21.78	47.50	5.26						
	2 Wire Copper Unbundled Sub-Loop Distribution - Zone 3		3	UEF	UCS2X	12.98	60.19	21.78	47.50	5.26						
	Order Coordination for Unbundled Sub-Loops, per sub-loop pair			UEF	USBMC		9.00	9.00								
	4 Wire Copper Unbundled Sub-Loop Distribution - Zone 1		1	UEF	UCS4X	5.36	68.83	30.42	49.71	6.60						

CATEGORY	RATE ELEMENTS	Interim	Zone	BCS	USOC	RATES($)					Svc Order Submitted Elec per LSR	Svc Order Submitted Manually per LSR	Incremental Charge - Manual Svc Order vs. Electronic-1st	Incremental Charge - Manual Svc Order vs. Electronic-Add'l	Incremental Charge - Manual Svc Order vs. Electronic-Disc 1st	Incremental Charge - Manual Svc Order vs. Electronic-Disc Add'l
						Rec	Nonrecurring		Nonrecurring Disconnect		OSS Rates($)					
							First	Add'l	First	Add'l	SOMEC	SOMAN	SOMAN	SOMAN	SOMAN	SOMAN
	4 Wire Copper Unbundled Sub-Loop Distribution - Zone 2		2	UEF	UCS4X	7.61	68.83	30.42	49.71	6.60						
	4 Wire Copper Unbundled Sub-Loop Distribution - Zone 3		3	UEF	UCS4X	13.51	68.83	30.42	49.71	6.60						
	Order Coordination for Unbundled Sub-Loops, per sub-loop pair			UEF	USBMC		9.00	9.00								
	Loop Tagging Service Level 1, Unbundled Copper Loop, Non-Designed and Distribution Subloops			UEF, UEANL	URETL		8.93	0.88								
	Loop Testing - Basic 1st Half Hour			UEF	URET1		48.65	0.00								
	Loop Testing - Basic Additional Half Hour			UEF	URETA		23.95	23.95								
Unbundled Sub-Loop Modification																
	Unbundled Sub-Loop Modification - 2-W Copper Dist Load Coil/Equip Removal per 2-W PR			UEF	ULM2X		10.11	10.11								
	Unbundled Sub-loop Modification - 4-W Copper Dist Load Coil/Equip Removal per 4-W PR			UEF	ULM4X		10.11	10.11								
	Unbundled Loop Modification, Removal of Bridge Tap, per unbundled loop			UEF	ULMBT		15.58	15.58								
Unbundled Network Terminating Wire (UNTW)																
	Unbundled Network Terminating Wire (UNTW) per Pair			UENTW	UENPP	0.4572	18.02									
Network Interface Device (NID)																
	Network Interface Device (NID) - 1-2 lines			UENTW	UND12		71.49	48.87								
	Network Interface Device (NID) - 1-6 lines			UENTW	UND16		113.89	89.07								
	Network Interface Device Cross Connect - 2 W			UENTW	UNDC2		7.63	7.63								
	Network Interface Device Cross Connect - 4W			UENTW	UNDC4		7.63	7.63								
UNE OTHER, PROVISIONING ONLY - NO RATE																
	Unbundled Contact Name, Provisioning Only - no rate			UAL, UCL, UDC, UDL, UDN, UEA, UHL, UEANL, UEF, UEQ, UENTW, NTCVG, NTCUD, NTCD1, USL	UNECN	0.00	0.00									
	Unbundled DS1 Loop - Superframe Format Option - no rate			USL, NTCD1	CCOSF		0.00									
	Unbundled DS1 Loop - Expanded Superframe Format option - no rate			USL, NTCD1	CCOEF		0.00									
	NID - Dispatch and Service Order for NID installation			UENTW	UNDBX	0.00	0.00									
	UNTW Circuit Establishment, Provisioning Only - No Rate			UENTW	UENCE	0.00	0.00									
LOOP MAKE-UP																
	Loop Makeup - Preordering Without Reservation, per working or spare facility queried (Manual).			UMK	UMKLW		52.17	52.17								
	Loop Makeup - Preordering With Reservation, per spare facility queried (Manual).			UMK	UMKLP		55.07	55.07								
	Loop Makeup--With or Without Reservation, per working or spare facility queried (Mechanized)			UMK	UMKMQ		0.6784	0.6784								
LINE SPLITTING																
END USER ORDERING-CENTRAL OFFICE BASED																
	Line Splitting - per line activation DLEC owned splitter			UEPSR UEPSB	UREOS	0.61										
	Line Splitting - per line activation BST owned - physical			UEPSR UEPSB	UREBP	0.61	29.68	21.28	19.57	9.61						
	Line Splitting - per line activation BST owned - virtual			UEPSR UEPSB	UREBV	1.134	29.68	21.28	19.57	9.61						
END USER ORDERING - REMOTE SITE LINE SPLITTING																
UNBUNDLED EXCHANGE ACCESS LOOP																
2-WIRE ANALOG VOICE GRADE LOOP																
	2 Wire Analog Voice Grade Loop-Service Level 1-Line Splitting-Zone 1		1	UEPSR UEPSB	UEALS	10.69	49.57	22.83	25.62	6.57						
	2 Wire Analog Voice Grade Loop-Service Level 1-Line Splitting-Zone 1		1	UEPSR UEPSB	UEABS	10.69	49.57	22.83	25.62	6.57						
	2 Wire Analog Voice Grade Loop- Service Level 1-Line Splitting-Zone 2		2	UEPSR UEPSB	UEALS	15.20	49.57	22.83	25.62	6.57						
	2 Wire Analog Voice Grade Loop- Service Level 1-Line Splitting-Zone 2		2	UEPSR UEPSB	UEABS	15.20	49.57	22.83	25.62	6.57						
	2 Wire Analog Voice Grade Loop-Service Level 1-Line Splitting-Zone 3		3	UEPSR UEPSB	UEALS	26.97	49.57	22.83	25.62	6.57						

CATEGORY	RATE ELEMENTS	Interim	Zone	BCS	USOC	RATES($)					Svc Order Submitted Elec per LSR	Svc Order Submitted Manually per LSR	Incremental Charge - Manual Svc Order vs. Electronic-1st	Incremental Charge - Manual Svc Order vs. Electronic-Add'l	Incremental Charge - Manual Svc Order vs. Electronic-Disc 1st	Incremental Charge - Manual Svc Order vs. Electronic-Disc Add'l
						Rec	Nonrecurring		Nonrecurring Disconnect		OSS Rates($)					
							First	Add'l	First	Add'l	SOMEC	SOMAN	SOMAN	SOMAN	SOMAN	SOMAN
	2 Wire Analog Voice Grade Loop-Service Level 1-Line Splitting-Zone 3		3	UEPSR UEPSB	UEABS	26.97	49.57	22.83	25.62	6.57						
	PHYSICAL COLLOCATION															
	Physical Collocation-2 Wire Cross Connects (Loop) for Line Splitting			UEPSR UEPSB	PE1LS	0.0276	8.22	7.22	5.74	4.58						
	VIRTUAL COLLOCATION															
	Virtual Collocation-2 Wire Cross Connects (Loop) for Line Splitting			UEPSR UEPSB	VE1LS	0.0502	11.57	11.57	0.00	0.00						
MAINTENANCE OF SERVICE																
	NOTE: The Expedite charge will be maintained commensurate with BellSouth's FCC No.1 Tariff, Section 13.3.1 as applicable.															
	No Trouble Found - per 1/2 hour increments - Basic						80.00	55.00								
	No Trouble Found - per 1/2 hour increments - Overtime						90.00	65.00								
	No Trouble Found - per 1/2 hour increments - Premium						100.00	75.00								
UNBUNDLED DEDICATED TRANSPORT																
	INTEROFFICE CHANNEL - DEDICATED TRANSPORT															
	Interoffice Channel - 2-Wire Voice Grade - per mile			U1TVX	1L5XX	0.0091										
	Interoffice Channel - 2-Wire Voice Grade - Facility Termination			U1TVX	U1TV2	25.32	47.35	31.78	18.31	7.03						
	Interoffice Channel - 2-Wire Voice Grade Rev Bat. - per mile			U1TVX	1L5XX	0.0091										
	Interoffice Channel - 4-Wire Voice Grade - per mile			U1TVX	1L5XX	0.0091										
	Interoffice Channel - 4- Wire Voice Grade - Facility Termination			U1TVX	U1TV4	22.58	47.35	31.78	18.31	7.03						
	Interoffice Channel - 56 kbps - per mile			U1TDX	1L5XX	0.0091										
	Interoffice Channel - 56 kbps - Facility Termination			U1TDX	U1TD5	18.44	47.35	31.78	18.31	7.03						
	Interoffice Channel - 64 kbps - per mile			U1TDX	1L5XX	0.0091										
	Interoffice Channel - 64 kbps - Facility Termination			U1TDX	U1TD6	18.44	47.35	31.78	18.31	7.03						
	Interoffice Channel - DS1 - per mile			U1TD1	1L5XX	0.1856										
	Interoffice Channel - DS1 - Facility Termination			U1TD1	U1TF1	88.44	105.54	98.47	21.47	19.05						
	Interoffice Channel - DS3 - per mile			U1TD3	1L5XX	3.87										
	Interoffice Channel - DS3 - Facility Termination			U1TD3	U1TF3	1,071.00	335.46	219.28	72.03	70.56						
	Interoffice Channel - STS-1 - per mile			U1TS1	1L5XX	3.87										
	Interoffice Channel - STS-1 - Facility Termination			U1TS1	U1TFS	1,056.00	335.46	219.28	72.03	70.56						
	UNBUNDLED DARK FIBER - Stand Alone or in Combination															
	Dark Fiber - Interoffice Transport, Per Four Fiber Strands, Per Route Mile Or Fraction Thereof			UDF, UDFCX	1L5DF	26.85										
	Dark Fiber - Interoffice Transport, Per Four Fiber Strands, Per Route Mile Or Fraction Thereof			UDF, UDFCX	UDF14		751.34	193.88								
HIGH CAPACITY UNBUNDLED LOCAL LOOP																
	DS-3/STS-1 UNBUNDLED LOCAL LOOP - Stand Alone															
	DS3 Unbundled Local Loop - per mile			UE3	1L5ND	10.92										
	DS3 Unbundled Local Loop - Facility Termination			UE3	UE3PX	386.88	556.37	343.01	139.13	96.84						
	STS-1Unbundled Local Loop - per mile			UDLSX	1L5ND	10.92										
	STS-1 Unbundled Local Loop - Facility Termination			UDLSX	UDLS1	426.60	556.37	343.01	139.13	96.84						
ENHANCED EXTENDED LINK (EELs)																
	Network Elements Used in Combinations															
	2-Wire VG Loop (SL2) in Combination - Zone 1		1	UNCVX	UEAL2	12.24	127.59	60.54	48.00	6.31						
	2-Wire VG Loop (SL2) in Combination - Zone 2		2	UNCVX	UEAL2	17.40	127.59	60.54	48.00	6.31						
	2-Wire VG Loop (SL2) in Combination - Zone 3		3	UNCVX	UEAL2	30.87	127.59	60.54	48.00	6.31						
	4-Wire Analog Voice Grade Loop in Combination - Zone 1		1	UNCVX	UEAL4	18.89	127.59	60.54	48.00	6.31						
	4-Wire Analog Voice Grade Loop in Combination - Zone 2		2	UNCVX	UEAL4	26.84	127.59	60.54	48.00	6.31						
	4-Wire Analog Voice Grade Loop in Combination - Zone 3		3	UNCVX	UEAL4	47.62	127.59	60.54	48.00	6.31						
	2-Wire ISDN Loop in Combination - Zone 1		1	UNCNX	U1L2X	19.28	127.59	60.54	48.00	6.31						
	2-Wire ISDN Loop in Combination - Zone 2		2	UNCNX	U1L2X	27.40	127.59	60.54	48.00	6.31						
	2-Wire ISDN Loop in Combination - Zone 3		3	UNCNX	U1L2X	48.62	127.59	60.54	48.00	6.31						
	4-Wire 56Kbps Digital Grade Loop in Combination - Zone 1		1	UNCDX	UDL56	22.20	127.59	60.54	48.00	6.31						
	4-Wire 56Kbps Digital Grade Loop in Combination - Zone 2		2	UNCDX	UDL56	31.56	127.59	60.54	48.00	6.31						
	4-Wire 56Kbps Digital Grade Loop in Combination - Zone 3		3	UNCDX	UDL56	55.99	127.59	60.54	48.00	6.31						
	4-Wire 64Kbps Digital Grade Loop in Combination - Zone 1		1	UNCDX	UDL64	22.20	127.59	60.54	48.00	6.31						
	4-Wire 64Kbps Digital Grade Loop in Combination - Zone 2		2	UNCDX	UDL64	31.56	127.59	60.54	48.00	6.31						
	4-Wire 64Kbps Digital Grade Loop in Combination - Zone 3		3	UNCDX	UDL64	55.99	127.59	60.54	48.00	6.31						

UNBUNDLED NETWORK ELEMENTS - Florida														Attachment: 2 Exh A			
CATEGORY		RATE ELEMENTS	Interim	Zone	BCS	USOC	RATES($)					Svc Order Submitted Elec per LSR	Svc Order Submitted Manually per LSR	Incremental Charge - Manual Svc Order vs. Electronic-1st	Incremental Charge - Manual Svc Order vs. Electronic-Add'l	Incremental Charge - Manual Svc Order vs. Electronic-Disc 1st	Incremental Charge - Manual Svc Order vs. Electronic-Disc Add'l
							Rec	Nonrecurring		Nonrecurring Disconnect		OSS Rates($)					
								First	Add'l	First	Add'l	SOMEC	SOMAN	SOMAN	SOMAN	SOMAN	SOMAN
		4-Wire DS1 Digital Loop in Combination - Zone 1		1	UNC1X	USLXX	70.74	217.75	121.62	51.44	14.45						
		4-Wire DS1 Digital Loop in Combination - Zone 2		2	UNC1X	USLXX	100.54	217.75	121.62	51.44	14.45						
		4-Wire DS1 Digital Loop in Combination - Zone 3		3	UNC1X	USLXX	178.39	217.75	121.62	51.44	14.45						
		DS3 Local Loop in combination - per mile			UNC3X	1L5ND	10.92										
		DS3 Local Loop in combination - Facility Termination			UNC3X	UE3PX	386.88	244.42	154.73	67.10	26.27						
		STS-1 Local Loop in combination - per mile			UNCSX	1L5ND	10.92										
		STS-1 Local Loop in combination - Facility Termination			UNCSX	UDLS1	426.60	244.42	154.73	67.10	26.27						
		Interoffice Channel in combination - 2-wire VG - per mile			UNCVX	1L5XX	0.0091										
		Interoffice Channel in combination - 2-wire VG - Facility Termination			UNCVX	U1TV2	25.32	94.70	52.59	45.28	18.03						
		Interoffice Channel in combination - 4-wire VG - per mile			UNCVX	1L5XX	0.0091										
		Interoffice Channel in combination - 4-wire VG - Facility Termination			UNCVX	U1TV4	22.58	94.70	52.59	45.28	18.03						
		Interoffice Channel in combination - 4-wire 56 kbps - per mile			UNCDX	1L5XX	0.0091										
		Interoffice Channel in combination - 4-wire 56 kbps - Facility Termination			UNCDX	U1TD5	18.44	94.70	52.59	45.28	18.03						
		Interoffice Channel in combination - 4-wire 64 kbps - per mile			UNCDX	1L5XX	0.0091										
		Interoffice Channel in combination - 4-wire 64 kbps - Facility Termination			UNCDX	U1TD6	18.44	94.70	52.59	45.28	18.03						
		Interoffice Channel in combination - DS1 - per mile			UNC1X	1L5XX	0.1856										
		Interoffice Channel in combination - DS1 Facility Termination			UNC1X	U1TF1	88.44	174.46	122.46	45.61	17.95						
		Interoffice Channel in combination - DS3 - per mile			UNC3X	1L5XX	3.87										
		Interoffice Channel in combination - DS3 - Facility Termination			UNC3X	U1TF3	1,071.00	320.00	138.20	38.60	18.81						
		Interoffice Channel in combination - STS-1 - per mile			UNCSX	1L5XX	3.87										
		Interoffice Channel in combination - STS-1 Facility Termination			UNCSX	U1TFS	1,056.00	320.00	138.20	38.60	18.81						
ADDITIONAL NETWORK ELEMENTS																	
	Optional Features & Functions:																
		Clear Channel Capability Extended Frame Option - per DS1	I		U1TD1, ULDD1,UNC1X	CCOEF		0.00	0.00								
		Clear Channel Capability Super FrameOption - per DS1	I		U1TD1, ULDD1,UNC1X	CCOSF		0.00	0.00								
		Clear Channel Capability (SF/ESF) Option - Subsequent Activity - per DS1	I		ULDD1, U1TD1, UNC1X, USL	NRCCC		184.92	23.82	2.07	0.80						
		C-bit Parity Option - Subsequent Activity - per DS3	i		U1TD3, ULDD3, UE3, UNC3X	NRCC3		219.09	7.67	0.773	0.00						
		DS1/DS0 Channel System			UNC1X	MQ1	146.77	57.28	14.74	1.50	1.34						
		DS3/DS1Channel System			UNC3X, UNCSX	MQ3	211.19	115.60	56.54	12.16	4.26						
		Voice Grade COCI in combination			UNCVX	1D1VG	1.38	6.71	4.84								
		Voice Grade COCI - for Stand Alone Local Loop			UEA	1D1VG	1.38	6.71	4.84	0.00	0.00						
		Voice Grade COCI - for connection to a channelized DS1 Local Channel in the same SWC as collocation			U1TUC	1D1VG	1.38	6.71	4.84	0.00	0.00						
		OCU-DP COCI (2.4-64kbs) in combination			UNCDX	1D1DD	2.10	6.71	4.84	0.00	0.00						
		OCU-DP COCI (2.4-64kbs) - for Stand Alone Local Loop			UDL	1D1DD	2.10	6.71	4.84	0.00	0.00						
		OCU-DP COCI (2.4-64kbs) - for connection to a channelized DS1 Local Channel in the same SWC as collocation			U1TUD	1D1DD	2.10	6.71	4.84	0.00	0.00						
		2-wire ISDN COCI (BRITE) in combination			UNCNX	UC1CA	3.66	6.71	4.84	0.00	0.00						
		2-wire ISDN COCI (BRITE) - for a Local Loop			UDN	UC1CA	3.66	6.71	4.84	0.00	0.00						
		2-wire ISDN COCI (BRITE) - for connection to a channelized DS1 Local Channel in the same SWC as collocation			U1TUB	UC1CA	3.66	6.71	4.84	0.00	0.00						
		DS1 COCI in combination			UNC1X	UC1D1	13.76	6.71	4.84	0.00	0.00						
		DS1 COCI - for Stand Alone Local Channel			ULDD1	UC1D1	13.76	6.71	4.84	0.00	0.00						
		DS1 COCI - for Stand Alone Interoffice Channel			U1TD1	UC1D1	13.76	6.71	4.84	0.00	0.00						
		DS1 COCI - for Stand Alone Local Loop			USL	UC1D1	13.76	6.71	4.84	0.00	0.00						
		DS1 COCI - for connection to a channelized DS1 Local Channel in the same SWC as collocation			U1TUA	UC1D1	13.76	6.71	4.84	0.00	0.00						

CATEGORY	RATE ELEMENTS	Interim	Zone	BCS	USOC	RATES($) Rec	Nonrecurring First	Nonrecurring Add'l	Nonrecurring Disconnect First	Nonrecurring Disconnect Add'l	Svc Order Submitted Elec per LSR	Svc Order Submitted Manually per LSR	Incremental Charge - Manual Svc Order vs. Electronic-1st	Incremental Charge - Manual Svc Order vs. Electronic-Add'l	Incremental Charge - Manual Svc Order vs. Electronic-Disc 1st	Incremental Charge - Manual Svc Order vs. Electronic-Disc Add'l
											OSS Rates($)					
							First	Add'l	First	Add'l	SOMEC	SOMAN	SOMAN	SOMAN	SOMAN	SOMAN
	Wholesale - UNE, Switch-As-Is Conversion Charge			UNCVX, UNCDX, UNC1X, UNC3X, UNCSX, UDFCX, XDH1X, HFQC6, XDD2X, XDV6X, XDDFX, XDD4X, HFRST	UNCCC		8.98	8.98								
	Unbundled Misc Rate Element, SNE SAI, Single Network Element - Switch As Is Non-recurring Charge, per circuit (LSR)			U1TVX, U1TDX, U1TD1, U1TD3, U1TS1, UDF, UE3	URESL		8.98	8.98								
	Unbundled Misc Rate Element, SNE SAI, Single Network Element - Switch As Is Non-recurring Charge, incremental charge per circuit on a spreadsheet			U1TVX, U1TDX, U1TD1, U1TD3, U1TS1, UDF, UE3	URESP		8.98	8.98								
Access to DCS - Customer Reconfiguration (FlexServ)																
	Customer Reconfiguration Establishment						1.63		1.63							
	DS1 DCS Termination with DS0 Switching					27.39	32.89	23.58	16.96	12.77						
	DS1 DCS Termination with DS1 Switching					11.70	25.07	15.76	13.05	8.86						
	DS3 DCS Termination with DS1 Switching					146.81	32.89	23.58	16.96	12.77						
Node (SynchroNet)																
	Node per month			UNCDX	UNCNT	16.35										
Service Rearrangements																
	NRC - Change in Facility Assignment per circuit Service Rearrangement	I		U1TVX, U1TDX, UEA, UDL, U1TUC, U1TUD, U1TUB, ULDVX, ULDDX, UNCVX, UNCDX, UNC1X	URETD		101.07	43.04								
	NRC - Change in Facility Assignment per circuit Project Management (added to CFA per circuit if project managed)	I		U1TVX, U1TDX, UEA, UDL, U1TUC, U1TUD, U1TUB, ULDVX, ULDDX, UNCVX, UNCDX, UNC1X	URETB		3.67	3.67								
	NRC - Order Coordination Specific Time - Dedicated Transport	I		UNC1X, UNC3X	OCOSR		18.90	18.90								
	UNE Reconfiguration Change Charge per Circuit	I		UNC1X	URERC		35.00	35.00								
	UNE Reconfiguration Change Charge per Circuit Project Managed	I		UNC1X	URERP		3.67	3.67								
COMMINGLING																
	Commingling Authorization			UNCVX, UNCDX, UNC1X, UNC3X, UNCSX, U1TD1, U1TD3, U1TS1, UE3, UDLSX, U1TVX, U1TDX, U1TUB, ULDVX, ULDD1, ULDD3, ULDS1	CMGAU	0.00	0.00	0.00	0.00	0.00						
Commingled (UNE part of single bandwidth circuit)																
	Commingled VG COCI			XDV2X, NTCVG	1D1VG	1.38	6.71	4.84	0.00	0.00						
	Commingled Digital COCI			XDV6X, NTCUD	1D1DD	2.10	6.71	4.84	0.00	0.00						
	Commingled ISDN COCI			XDD4X	UC1CA	3.66	6.71	4.84	0.00	0.00						
	Commingled 2-wire VG Interoffice Channel			XDV2X	U1TV2	25.32	94.70	52.59	45.28	18.03						
	Commingled 4-wire VG Interoffice Channel			XDV6X	U1TV4	22.58	94.70	52.59	45.28	18.03						
	Commingled 56kbps Interoffice Channel			XDD4X	U1TD5	18.44	94.70	52.59	45.28	18.03						
	Commingled 64kbps Interoffice Channel			XDD4X	U1TD6	18.44	94.70	52.59	45.28	18.03						
	Commingled VG/DS0 Interoffice Channel Mileage			XDV2X, XDV6X, XDD4X	1L5XX	0.0091										
	Commingled 2-wire Local Loop Zone 1		1	XDV2X	UEAL2	12.24	127.59	60.54	48.00	6.31						
	Commingled 2-wire Local Loop Zone 2		2	XDV2X	UEAL2	17.40	127.59	60.54	48.00	6.31						

UNBUNDLED NETWORK ELEMENTS - Florida														Attachment: 2 Exh A			
CATEGORY		RATE ELEMENTS	Interim	Zone	BCS	USOC	RATES($)					Svc Order Submitted Elec per LSR	Svc Order Submitted Manually per LSR	Incremental Charge - Manual Svc Order vs. Electronic-1st	Incremental Charge - Manual Svc Order vs. Electronic-Add'l	Incremental Charge - Manual Svc Order vs. Electronic-Disc 1st	Incremental Charge - Manual Svc Order vs. Electronic-Disc Add'l
							Rec	Nonrecurring		Nonrecurring Disconnect		OSS Rates($)					
								First	Add'l	First	Add'l	SOMEC	SOMAN	SOMAN	SOMAN	SOMAN	SOMAN
		Commingled 2-wire Local Loop Zone 3		3	XDV2X	UEAL2	30.87	127.59	60.54	48.00	6.31						
		Commingled 4-wire Local Loop Zone 1		1	XDV6X	UEAL4	18.89	127.59	60.54	48.00	6.31						
		Commingled 4-wire Local Loop Zone 2		2	XDV6X	UEAL4	26.84	127.59	60.54	48.00	6.31						
		Commingled 4-wire Local Loop Zone 3		3	XDV6X	UEAL4	47.62	127.59	60.54	48.00	6.31						
		Commingled 56kbps Local Loop Zone 1		1	XDD4X	UDL56	22.20	127.59	60.54	48.00	6.31						
		Commingled 56kbps Local Loop Zone 2		2	XDD4X	UDL56	31.56	127.59	60.54	48.00	6.31						
		Commingled 56kbps Local Loop Zone 3		3	XDD4X	UDL56	55.99	127.59	60.54	48.00	6.31						
		Commingled 64kbps Local Loop Zone 1		1	XDD4X	UDL64	22.20	127.59	60.54	48.00	6.31						
		Commingled 64kbps Local Loop Zone 2		2	XDD4X	UDL64	31.56	127.59	60.54	48.00	6.31						
		Commingled 64kbps Local Loop Zone 3		3	XDD4X	UDL64	55.99	127.59	60.54	48.00	6.31						
		Commingled ISDN Local Loop Zone 1		1	XDD4X	U1L2X	19.28	127.59	60.54	48.00	6.31						
		Commingled ISDN Local Loop Zone 2		2	XDD4X	U1L2X	27.40	127.59	60.54	48.00	6.31						
		Commingled ISDN Local Loop Zone 3		3	XDD4X	U1L2X	48.62	127.59	60.54	48.00	6.31						
		Commingled DS1 COCI			XDH1X, NTCD1	UC1D1	13.76	6.71	4.84	0.00	0.00						
		Commingled DS1 Interoffice Channel			XDH1X	U1TF1	88.44	174.46	122.46	45.61	17.95						
		Commingled DS1 Interoffice Channel Mileage			XDH1X	1L5XX	0.1856										
		Commingled DS1/DS0 Channel System			XDH1X	MQ1	146.77	57.28	14.74	1.50	1.34						
		Commingled DS1 Local Loop Zone 1		1	XDH1X	USLXX	70.74	217.75	121.62	51.44	14.45						
		Commingled DS1 Local Loop Zone 2		2	XDH1X	USLXX	100.54	217.75	121.62	51.44	14.45						
		Commingled DS1 Local Loop Zone 3		3	XDH1X	USLXX	178.39	217.75	121.62	51.44	14.45						
		Commingled DS3 Local Loop			HFQC6	UE3PX	386.88	244.42	154.73	67.10	26.27						
		Commingled DS3/STS-1 Local Loop Mileage			HFQC6, HFRST	1L5ND	10.92										
		Commingled STS-1 Local Loop			HFRST	UDLS1	426.60	244.42	154.73	67.10	26.27						
		Commingled DS3/DS1 Channel System			HFQC6	MQ3	211.19	115.60	56.54	12.16	4.26						
		Commingled DS3 Interoffice Channel			HFQC6	U1TF3	1,071.00	320.00	138.20	38.60	18.81						
		Commingled DS3 Interoffice Channel Mileage			HFQC6	1L5XX	3.87										
		Commingled STS-1Interoffice Channel			HFRST	U1TFS	1,056.00	320.00	138.20	38.60	18.81						
		Commingled STS-1Interoffice Channel Mileage			HFRST	1L5XX	3.87										
		Commingled Dark Fiber - Interoffice Transport, Per Four Fiber Strands, Per Route Mile Or Fraction Thereof			HEQDL	1L5DF	26.85										
		Commingled Dark Fiber - Interoffice Transport, Per Four Fiber Strands, Per Route Mile Or Fraction Thereof			HEQDL	UDF14		751.34	193.88								
		UNE to Commingled Conversion Tracking			XDH1X, HFQC6	CMGUN	0.00	0.00	0.00	0.00	0.00						
		SPA to Commingled Conversion Tracking			XDH1X, HFQC6	CMGSP	0.00	0.00	0.00	0.00	0.00						
LNP Query Service																	
		LNP Charge Per query					0.000852										
		LNP Service Establishment Manual						13.83	13.83	12.71	12.71						
		LNP Service Provisioning with Point Code Establishment						655.50	334.88	297.03	218.40						
911 PBX LOCATE																	
	911 PBX LOCATE DATABASE CAPABILITY																
		Service Establishment per CLEC per End User Account			9PBDC	9PBEU		1,820.00									
		Changes to TN Range or Customer Profile			9PBDC	9PBTN		182.14									
		Per Telephone Number (Monthly)			9PBDC	9PBMM	0.07										
		Change Company (Service Provider) ID			9PBDC	9PBPC		534.66									
		PBX Locate Service Support per CLEC (Monthlt)			9PBDC	9PBMR	178.80										
		Service Order Charge			9PBDC	9PBSC		11.90									
	911 PBX LOCATE TRANSPORT COMPONENT																
	See Att 3																
	Note: Rates displaying an "I" in Interim column are interim as a result of a Commission order.																

UNBUNDLED NETWORK ELEMENTS - Georgia														Attachment: 2 Exh A			
CATEGORY	RATE ELEMENTS	Interim	Zone	BCS	USOC	RATES($)					Svc Order Submitted Elec per LSR	Svc Order Submitted Manually per LSR	Incremental Charge - Manual Svc Order vs. Electronic-1st	Incremental Charge - Manual Svc Order vs. Electronic-Add'l	Incremental Charge - Manual Svc Order vs. Electronic-Disc 1st	Incremental Charge - Manual Svc Order vs. Electronic-Disc Add'l
						Rec	Nonrecurring		Nonrecurring Disconnect		OSS Rates($)					
							First	Add'l	First	Add'l	SOMEC	SOMAN	SOMAN	SOMAN	SOMAN	SOMAN
	The "Zone" shown in the sections for stand-alone loops or loops as part of a combination refers to Geographically Deaveraged UNE Zones. To view Geographically Deaveraged UNE Zone Designations by Central Office, refer to internet Website: http://www.interconnection.bellsouth.com/become_a_clec/html/interconnection.htm															
OPERATIONS SUPPORT SYSTEMS (OSS) - "REGIONAL RATES"																
	NOTE: (1) CLEC should contact its contract negotiator if it prefers the "state specific" OSS charges as ordered by the State Commissions. The OSS charges currently contained in this rate exhibit are the BellSouth "regional" service ordering charges. CLEC may elect either the state specific Commission ordered rates for the service ordering charges, or CLEC may elect the regional service ordering charge, however, CLEC can not obtain a mixture of the two regardless if CLEC has a interconnection contract established in each of the 9 states.															
	NOTE: (2) Any element that can be ordered electronically will be billed according to the SOMEC rate listed in this category. Please refer to BellSouth's Local Ordering Handbook (LOH) to determine if a product can be ordered electronically. For those elements that cannot be ordered electronically at present per the LOH, the listed SOMEC rate in this category reflects the charge that would be billed to a CLEC once electronic ordering capabilities come on-line for that element. Otherwise, the manual ordering charge, SOMAN, will be applied to a CLECs bill when it submits an LSR to BellSouth.															
	OSS - Electronic Service Order Charge, Per Local Service Request (LSR) - UNE Only				SOMEC		3.50	0.00	3.50	0.00						
	OSS - Manual Service Order Charge, Per Local Service Request (LSR) - UNE Only				SOMAN		11.71	0.00	6.13	0.00						
UNE SERVICE DATE ADVANCEMENT CHARGE																
	NOTE: The Expedite charge will be maintained commensurate with BellSouth's FCC No.1 Tariff, Section 5 as applicable.															
	UNE Expedite Charge per Circuit or Line Assignable USOC, per Day			UAL, UEANL, UCL, UEF, UDC, UDF, UEQ, UDL, UENTW, UDN, UEA, UHL, ULC, USL, U1T12, U1T48, U1TD1, U1TD3, U1TDX, U1TO3, U1TS1, U1TVX, UC1BC, UC1BL, UC1CC, UC1CL, UC1DC, UC1DL, UC1EC, UC1EL, UC1FC, UC1FL, UC1GC, UC1GL, UC1HC, UC1HL, UDL12, UDL48, UDLO3, UDLSX, UE3, ULD12, ULD48, ULDD1, ULDD3, ULDDX, ULDO3, ULDS1, ULDVX, UNC1X, UNC3X, UNCDX, UNCNX, UNCSX, UNCVX, UNLD1, UNLD3, UXTD1, UXTD3, UXTS1, U1TUC, U1TUD, U1TUB, U1TUA,NTCVG, NTCUD, NTCD1	SDASP		200.00									
ORDER MODIFICATION CHARGE																
	Order Modification Charge (OMC)						26.21	0.00	0.00	0.00						
	Order Modification Additional Dispatch Charge (OMCAD)						150.00	0.00	0.00	0.00						
UNBUNDLED EXCHANGE ACCESS LOOP																
	2-WIRE ANALOG VOICE GRADE LOOP															
	2-Wire Analog Voice Grade Loop - Service Level 1- Zone 1		1	UEANL	UEAL2	12.08	39.98	9.98	5.61	1.72						
	2-Wire Analog Voice Grade Loop - Service Level 1- Zone 2		2	UEANL	UEAL2	17.43	39.98	9.98	5.61	1.72						
	2-Wire Analog Voice Grade Loop - Service Level 1- Zone 3		3	UEANL	UEAL2	35.09	39.98	9.98	5.61	1.72						
	2-Wire Analog Voice Grade Loop - Service Level 1- Zone 1		1	UEANL	UEASL	12.08	39.98	9.98	5.61	1.72						
	2-Wire Analog Voice Grade Loop - Service Level 1- Zone 2		2	UEANL	UEASL	17.43	39.98	9.98	5.61	1.72						

CATEGORY	RATE ELEMENTS	Interim	Zone	BCS	USOC	RATES($)					Svc Order Submitted Elec per LSR	Svc Order Submitted Manually per LSR	Incremental Charge - Manual Svc Order vs. Electronic-1st	Incremental Charge - Manual Svc Order vs. Electronic-Add'l	Incremental Charge - Manual Svc Order vs. Electronic-Disc 1st	Incremental Charge - Manual Svc Order vs. Electronic-Disc Add'l
						Rec	Nonrecurring		Nonrecurring Disconnect		OSS Rates($)					
							First	Add'l	First	Add'l	SOMEC	SOMAN	SOMAN	SOMAN	SOMAN	SOMAN
	2-Wire Analog Voice Grade Loop - Service Level 1- Zone 3		3	UEANL	UEASL	35.09	39.98	9.98	5.61	1.72						
	Tag Loop at End User Premise			UEANL	URETL		8.92	0.88								
	Loop Testing - Basic 1st Half Hour			UEANL	URET1		26.64	0.00								
	Loop Testing - Basic Additional Half Hour			UEANL	URETA		15.15	15.15								
	Manual Order Coordiantion for UVL-SL1s (per loop)			UEANL	UEAMC		18.90	18.90	5.61	1.72						
	Order Coordination for Specified Conversion Time for UVL-SL1 (per LSR)			UEANL	OCOSL		57.73									
	Unbundled Non-Design Voice Loop, billing for BST providing make-up (Engineering Information - E.I.)			UEANL	UEANM		7.29	7.29								
	CLEC to CLEC Conversion Charge Without Outside Dispatch (UVL-SL1)			UEANL	UREWO		15.75	8.92	5.61	1.72						
	Bulk Migration, per 2 Wire Voice Loop-SL1			UEANL	UREPN		39.98	9.98	5.61	1.72						
	Bulk Migration Order Coordination, per 2 Wire Voice Loop-SL1			UEANL	UREPM		18.90	18.90								
2-WIRE UNBUNDLED COPPER LOOP - NON-DESIGNED																
	2 Wire Unbundled Copper Loop Non-Designed- Zone 1		1	UEQ	UEQ2X	11.02	44.69	22.40								
	2 Wire Unbundled Copper Loop Non-Designed- Zone 2		2	UEQ	UEQ2X	12.72	44.69	22.40								
	2 Wire Unbundled Copper Loop Non-Designed-Zone 3		3	UEQ	UEQ2X	20.22	44.69	22.40								
	Tag Loop at End User Premise			UEQ	URETL		8.92	0.88								
	Loop Testing - Basic 1st Half Hour			UEQ	URET1		26.64	0.00								
	Loop Testing - Basic Additional Half Hour			UEQ	URETA		15.15	15.15								
	Manual Order Coordination 2 Wire Unbundled Copper Loop - Non-Designed (per loop)			UEQ	USBMC		18.90	18.90								
	Unbundled Copper Loop - Non-Design, billing for BST providing make-up (Engineering Information - E.I.)			UEQ	UEQMU		7.29	7.29								
	CLEC to CLEC Conversion Charge Without Outside Dispatch (UCL-ND)			UEQ	UREWO		14.25	7.42								
	Bulk Migration, per 2 Wire UCL-ND			UEQ	UREPN		44.69	22.40								
	Bulk Migration Order Coordination, per 2 Wire UCL-ND			UEQ	UREPM		18.90	18.90								
UNBUNDLED EXCHANGE ACCESS LOOP																
2-WIRE ANALOG VOICE GRADE LOOP																
	2-Wire Analog Voice Grade Loop - Service Level 2 w/Loop or Ground Start Signaling - Zone 1		1	UEA	UEAL2	13.32	79.78	24.62	18.90	7.86						
	2-Wire Analog Voice Grade Loop - Service Level 2 w/Loop or Ground Start Signaling - Zone 2		2	UEA	UEAL2	18.66	79.78	24.62	18.90	7.86						
	2-Wire Analog Voice Grade Loop - Service Level 2 w/Loop or Ground Start Signaling - Zone 3		3	UEA	UEAL2	36.33	79.78	24.62	18.90	7.86						
	2-Wire Analog Voice Grade Loop - Service Level 2 w/Reverse Battery Signaling - Zone 1		1	UEA	UEAR2	13.32	79.78	24.62	18.90	7.86						
	2-Wire Analog Voice Grade Loop - Service Level 2 w/Reverse Battery Signaling - Zone 2		2	UEA	UEAR2	18.66	79.78	24.62	18.90	7.86						
	2-Wire Analog Voice Grade Loop - Service Level 2 w/Reverse Battery Signaling - Zone 3		3	UEA	UEAR2	36.33	79.78	24.62	18.90	7.86						
	Switch-As-Is Conversion rate per UNE Loop, Single LSR, (per DS0)			UEA	URESL		5.69	5.69								
	Switch-As-Is Conversion rate per UNE Loop, Spreadsheet, (per DS0)			UEA	URESP		5.69	5.69								
	CLEC to CLEC Conversion Charge without outside dispatch			UEA	UREWO		87.72	36.36								
	Loop Tagging - Service Level 2 (SL2)			UEA	URETL		11.19	1.10								
	Bulk Migration, per 2 Wire Voice Loop-SL2			UEA	UREPN		79.78	24.62								
	Bulk Migration Order Coordination, per 2 Wire Voice Loop-SL2			UEA	UREPM		0.00	0.00								
4-WIRE ANALOG VOICE GRADE LOOP																
	4-Wire Analog Voice Grade Loop - Zone 1		1	UEA	UEAL4	21.04	92.92	28.14	19.50	8.12						
	4-Wire Analog Voice Grade Loop - Zone 2		2	UEA	UEAL4	24.49	92.92	28.14	19.50	8.12						
	4-Wire Analog Voice Grade Loop - Zone 3		3	UEA	UEAL4	33.40	92.92	28.14	19.50	8.12						
	Switch-As-Is Conversion rate per UNE Loop, Single LSR, (per DS0)			UEA	URESL		5.69	5.69								
	Switch-As-Is Conversion rate per UNE Loop, Spreadsheet, (per DS0)			UEA	URESP		5.69	5.69								
	CLEC to CLEC Conversion Charge without outside dispatch			UEA	UREWO		87.72	36.36								

CATEGORY	RATE ELEMENTS	Interim	Zone	BCS	USOC	RATES($)					Svc Order Submitted Elec per LSR	Svc Order Submitted Manually per LSR	Incremental Charge - Manual Svc Order vs. Electronic-1st	Incremental Charge - Manual Svc Order vs. Electronic-Add'l	Incremental Charge - Manual Svc Order vs. Electronic-Disc 1st	Incremental Charge - Manual Svc Order vs. Electronic-Disc Add'l
						Rec	Nonrecurring		Nonrecurring Disconnect		OSS Rates($)					
							First	Add'l	First	Add'l	SOMEC	SOMAN	SOMAN	SOMAN	SOMAN	SOMAN
2-WIRE ISDN DIGITAL GRADE LOOP																
	2-Wire ISDN Digital Grade Loop - Zone 1		1	UDN	U1L2X	21.89	180.06	35.25	18.23	6.97						
	2-Wire ISDN Digital Grade Loop - Zone 2		2	UDN	U1L2X	25.27	180.06	35.25	18.23	6.97						
	2-Wire ISDN Digital Grade Loop - Zone 3		3	UDN	U1L2X	40.17	180.06	35.25	18.23	6.97						
	CLEC to CLEC Conversion Charge without outside dispatch			UDN	UREWO		120.98	33.04								
2-WIRE ASYMMETRICAL DIGITAL SUBSCRIBER LINE (ADSL) COMPATIBLE LOOP																
	2 Wire Unbundled ADSL Loop including manual service inquiry & facility reservation - Zone 1		1	UAL	UAL2X	11.23	44.69	31.55	0.00	0.00						
	2 Wire Unbundled ADSL Loop including manual service inquiry & facility reservation - Zone 2		2	UAL	UAL2X	12.97	44.69	31.55	0.00	0.00						
	2 Wire Unbundled ADSL Loop including manual service inquiry & facility reservation - Zone 3		3	UAL	UAL2X	20.62	44.69	31.55	0.00	0.00						
	2 Wire Unbundled ADSL Loop without manual service inquiry & facility reservaton - Zone 1		1	UAL	UAL2W	11.23	44.69	31.55	0.00	0.00						
	2 Wire Unbundled ADSL Loop without manual service inquiry & facility reservaton - Zone 2		2	UAL	UAL2W	12.97	44.69	31.55	0.00	0.00						
	2 Wire Unbundled ADSL Loop without manual service inquiry & facility reservaton - Zone 3		3	UAL	UAL2W	20.62	44.69	31.55	0.00	0.00						
	CLEC to CLEC Conversion Charge without outside dispatch			UAL	UREWO		44.69	29.29								
2-WIRE HIGH BIT RATE DIGITAL SUBSCRIBER LINE (HDSL) COMPATIBLE LOOP																
	2 Wire Unbundled HDSL Loop including manual service inquiry & facility reservation - Zone 1		1	UHL	UHL2X	7.88	44.69	31.55	0.00	0.00						
	2 Wire Unbundled HDSL Loop including manual service inquiry & facility reservation - Zone 2		2	UHL	UHL2X	9.09	44.69	31.55	0.00	0.00						
	2 Wire Unbundled HDSL Loop including manual service inquiry & facility reservation - Zone 3		3	UHL	UHL2X	14.48	44.69	31.55	0.00	0.00						
	2 Wire Unbundled HDSL Loop without manual service inquiry and facility reservation - Zone 1		1	UHL	UHL2W	7.88	44.69	31.55	0.00	0.00						
	2 Wire Unbundled HDSL Loop without manual service inquiry and facility reservation - Zone 2		2	UHL	UHL2W	9.09	44.69	31.55	0.00	0.00						
	2 Wire Unbundled HDSL Loop without manual service inquiry and facility reservation - Zone 3		3	UHL	UHL2W	14.48	44.69	31.55	0.00	0.00						
	CLEC to CLEC Conversion Charge without outside dispatch			UHL	UREWO		44.69	31.55								
4-WIRE HIGH BIT RATE DIGITAL SUBSCRIBER LINE (HDSL) COMPATIBLE LOOP																
	4 Wire Unbundled HDSL Loop including manual service inquiry and facility reservation - Zone 1		1	UHL	UHL4X	10.39	44.69	31.55	0.00	0.00						
	4-Wire Unbundled HDSL Loop including manual service inquiry and facility reservation - Zone 2		2	UHL	UHL4X	12.00	44.69	31.55	0.00	0.00						
	4-Wire Unbundled HDSL Loop including manual service inquiry and facility reservation - Zone 3		3	UHL	UHL4X	19.07	44.69	31.55	0.00	0.00						
	4-Wire Unbundled HDSL Loop without manual service inquiry and facility reservation - Zone 1		1	UHL	UHL4W	10.39	44.69	31.55	0.00	0.00						
	4-Wire Unbundled HDSL Loop without manual service inquiry and facility reservation - Zone 2		2	UHL	UHL4W	12.00	44.69	31.55	0.00	0.00						
	4-Wire Unbundled HDSL Loop without manual service inquiry and facility reservation - Zone 3		3	UHL	UHL4W	19.07	44.69	31.55	0.00	0.00						
	CLEC to CLEC Conversion Charge without outside dispatch			UHL	UREWO		44.69	31.55								
4-WIRE DS1 DIGITAL LOOP																
	4-Wire DS1 Digital Loop - Zone 1		1	USL	USLXX	49.41	211.72	72.42	38.20	7.19						
	4-Wire DS1 Digital Loop - Zone 2		2	USL	USLXX	52.55	211.72	72.42	38.20	7.19						
	4-Wire DS1 Digital Loop - Zone 3		3	USL	USLXX	68.40	211.72	72.42	38.20	7.19						
	Switch-As-Is Conversion rate per UNE Loop, Single LSR, (per DS1)			USL	URESL		5.69	5.69								
	Switch-As-Is Conversion rate per UNE Loop, Spreadsheet, (per DS1)			USL	URESP		5.69	5.69								
	CLEC to CLEC Conversion Charge without outside dispatch			USL	UREWO		100.91	42.97								
4-WIRE 19.2, 56 OR 64 KBPS DIGITAL GRADE LOOP																
	4 Wire Unbundled Digital Loop 2.4 Kbps - Zone 1		1	UDL	UDL2X	25.81	196.47	36.96	18.80	7.19						
	4 Wire Unbundled Digital Loop 2.4 Kbps - Zone 2		2	UDL	UDL2X	31.54	196.47	36.96	18.80	7.19						

CATEGORY	RATE ELEMENTS	Interim	Zone	BCS	USOC	RATES($)					Svc Order Submitted Elec per LSR	Svc Order Submitted Manually per LSR	Incremental Charge - Manual Svc Order vs. Electronic-1st	Incremental Charge - Manual Svc Order vs. Electronic-Add'l	Incremental Charge - Manual Svc Order vs. Electronic-Disc 1st	Incremental Charge - Manual Svc Order vs. Electronic-Disc Add'l
						Rec	Nonrecurring		Nonrecurring Disconnect		OSS Rates($)					
							First	Add'l	First	Add'l	SOMEC	SOMAN	SOMAN	SOMAN	SOMAN	SOMAN
	4 Wire Unbundled Digital Loop 2.4 Kbps - Zone 3		3	UDL	UDL2X	42.38	196.47	36.96	18.80	7.19						
	4 Wire Unbundled Digital Loop 4.8 Kbps - Zone 1		1	UDL	UDL4X	25.81	196.47	36.96	18.80	7.19						
	4 Wire Unbundled Digital Loop 4.8 Kbps - Zone 2		2	UDL	UDL4X	31.54	196.47	36.96	18.80	7.19						
	4 Wire Unbundled Digital Loop 4.8 Kbps - Zone 3		3	UDL	UDL4X	42.38	196.47	36.96	18.80	7.19						
	4 Wire Unbundled Digital Loop 9.6 Kbps - Zone 1		1	UDL	UDL9X	25.81	196.47	36.96	18.80	7.19						
	4 Wire Unbundled Digital Loop 9.6 Kbps - Zone 2		2	UDL	UDL9X	31.54	196.47	36.96	18.80	7.19						
	4 Wire Unbundled Digital Loop 9.6 Kbps - Zone 3		3	UDL	UDL9X	42.38	196.47	36.96	18.80	7.19						
	4 Wire Unbundled Digital 19.2 Kbps - Zone 1		1	UDL	UDL19	25.81	196.47	36.96	18.80	7.19						
	4 Wire Unbundled Digital 19.2 Kbps - Zone 2		2	UDL	UDL19	31.54	196.47	36.96	18.80	7.19						
	4 Wire Unbundled Digital 19.2 Kbps - Zone 3		3	UDL	UDL19	42.38	196.47	36.96	18.80	7.19						
	4 Wire Unbundled Digital Loop 56 Kbps - Zone 1		1	UDL	UDL56	25.81	196.47	36.96	18.80	7.19						
	4 Wire Unbundled Digital Loop 56 Kbps - Zone 2		2	UDL	UDL56	31.54	196.47	36.96	18.80	7.19						
	4 Wire Unbundled Digital Loop 56 Kbps - Zone 3		3	UDL	UDL56	42.38	196.47	36.96	18.80	7.19						
	4 Wire Unbundled Digital Loop 64 Kbps - Zone 1		1	UDL	UDL64	25.81	196.47	36.96	18.80	7.19						
	4 Wire Unbundled Digital Loop 64 Kbps - Zone 2		2	UDL	UDL64	31.54	196.47	36.96	18.80	7.19						
	4 Wire Unbundled Digital Loop 64 Kbps - Zone 3		3	UDL	UDL64	42.38	196.47	36.96	18.80	7.19						
	Switch-As-Is Conversion rate per UNE Loop, Single LSR, (per DS0)			UDL	URESL		5.69	5.69								
	Switch-As-Is Conversion rate per UNE Loop, Spreadsheet, (per DS0)			UDL	URESP		5.69	5.69								
	CLEC to CLEC Conversion Charge without outside dispatch			UDL	UREWO		101.95	49.66								
2-WIRE Unbundled COPPER LOOP																
	2-Wire Unbundled Copper Loop-Designed including manual service inquiry & facility reservation - Zone 1		1	UCL	UCLPB	12.02	44.69	31.55	0.00	0.00						
	2-Wire Unbundled Copper Loop-Designed including manual service inquiry & facility reservation - Zone 2		2	UCL	UCLPB	13.88	44.69	31.55	0.00	0.00						
	2 Wire Unbundled Copper Loop-Designed including manual service inquiry & facility reservation - Zone 3		3	UCL	UCLPB	22.07	44.69	31.55	0.00	0.00						
	2-Wire Unbundled Copper Loop-Designed without manual service inquiry and facility reservation - Zone 1		1	UCL	UCLPW	12.02	44.69	31.55	0.00	0.00						
	2-Wire Unbundled Copper Loop-Designed without manual service inquiry and facility reservation - Zone 2		2	UCL	UCLPW	13.88	44.69	31.55	0.00	0.00						
	2-Wire Unbundled Copper Loop-Designed without manual service inquiry and facility reservation - Zone 3		3	UCL	UCLPW	22.07	44.69	31.55	0.00	0.00						
	Order Coordination for Unbundled Copper Loops (per loop)			UCL	UCLMC		18.90	18.90								
	CLEC to CLEC conversion Charge without outside dispatch			UCL	UREWO		44.69	31.55								
4-WIRE COPPER LOOP																
	4-Wire Copper Loop-Designed including manual service inquiry and facility reservation - Zone 1		1	UCL	UCL4S	16.65	44.69	31.55	0.00	0.00						
	4-Wire Copper Loop-Designed including manual service inquiry and facility reservation - Zone 2		2	UCL	UCL4S	19.22	44.69	31.55	0.00	0.00						
	4-Wire Copper Loop-Designed including manual service inquiry and facility reservation - Zone 3		3	UCL	UCL4S	30.55	44.69	31.55	0.00	0.00						
	4-Wire Copper Loop-Designed without manual service inquiry and facility reservation - Zone 1		1	UCL	UCL4W	16.65	44.69	31.55	0.00	0.00						
	4-Wire Copper Loop-Designed without manual service inquiry and facility reservation - Zone 2		2	UCL	UCL4W	19.22	44.69	31.55	0.00	0.00						
	4-Wire Copper Loop-Designed without manual service inquiry and facility reservation - Zone 3		3	UCL	UCL4W	30.55	44.69	31.55	0.00	0.00						
	Order Coordination for Unbundled Copper Loops (per loop)			UCL	UCLMC		18.90	18.90								
	CLEC to CLEC conversion Charge without outside dispatch			UCL	UREWO		44.69	31.55								
	Order Coordination for Specified Conversion Time (per LSR)			UEA, UDN, UAL, UHL, UDL, USL	OCOSL		57.73									
Rearrangements																
	EEL to UNE-L Retermination, per 2 Wire Unbundled Voice Loop-SL2			UEA	UREEL		79.85	24.65								
	EEL to UNE-L Retermination, per 4 Wire Unbundled Voice Loop			UEA	UREEL		79.85	24.65								
	EEL to UNE-L Retermination, per 2 Wire ISDN Loop			UDN	UREEL		120.98	33.02								

CATEGORY	RATE ELEMENTS	Interim	Zone	BCS	USOC	RATES($)					Svc Order Submitted Elec per LSR	Svc Order Submitted Manually per LSR	Incremental Charge - Manual Svc Order vs. Electronic-1st	Incremental Charge - Manual Svc Order vs. Electronic-Add'l	Incremental Charge - Manual Svc Order vs. Electronic-Disc 1st	Incremental Charge - Manual Svc Order vs. Electronic-Disc Add'l
						Rec	Nonrecurring		Nonrecurring Disconnect		OSS Rates($)					
							First	Add'l	First	Add'l	SOMEC	SOMAN	SOMAN	SOMAN	SOMAN	SOMAN
	EEL to UNE-L Retermination, per 4 Wire Unmbundled Digital Loop			UDL	UREEL		101.95	49.66								
	EEL to UNE-L Retermination, per 4 Wire Unbundled DS1 Loop			USL	UREEL		100.91	42.97								
UNE LOOP COMMINGLING																
2-WIRE ANALOG VOICE GRADE LOOP - COMMINGLING																
	2-Wire Analog Voice Grade Loop - Service Level 2 w/Loop or Ground Start Signaling - Zone 1		1	NTCVG	UEAL2	13.32	79.78	24.62	18.90	7.86						
	2-Wire Analog Voice Grade Loop - Service Level 2 w/Loop or Ground Start Signaling - Zone 2		2	NTCVG	UEAL2	18.66	79.78	24.62	18.90	7.86						
	2-Wire Analog Voice Grade Loop - Service Level 2 w/Loop or Ground Start Signaling - Zone 3		3	NTCVG	UEAL2	36.33	79.78	24.62	18.90	7.86						
	2-Wire Analog Voice Grade Loop - Service Level 2 w/Reverse Battery Signaling - Zone 1		1	NTCVG	UEAR2	13.32	79.78	24.62	18.90	7.86						
	2-Wire Analog Voice Grade Loop - Service Level 2 w/Reverse Battery Signaling - Zone 2		2	NTCVG	UEAR2	18.66	79.78	24.62	18.90	7.86						
	2-Wire Analog Voice Grade Loop - Service Level 2 w/Reverse Battery Signaling - Zone 3		3	NTCVG	UEAR2	36.33	79.78	24.62	18.90	7.86						
	Switch-As-Is Conversion rate per UNE Loop, Single LSR, (per DS0)			NTCVG	URESL		5.69	5.69								
	Switch-As-Is Conversion rate per UNE Loop, Spreadsheet, (per DS0)			NTCVG	URESP		5.69	5.69								
	CLEC to CLEC Conversion Charge without outside dispatch			NTCVG	UREWO		87.72	36.36								
	Loop Tagging - Service Level 2 (SL2)			NTCVG	URETL		11.19	1.10								
4-WIRE ANALOG VOICE GRADE LOOP																
	4-Wire Analog Voice Grade Loop - Zone 1		1	NTCVG	UEAL4	21.04	92.92	28.14	19.50	8.12						
	4-Wire Analog Voice Grade Loop - Zone 2		2	NTCVG	UEAL4	24.49	92.92	28.14	19.50	8.12						
	4-Wire Analog Voice Grade Loop - Zone 3		3	NTCVG	UEAL4	33.40	92.92	28.14	19.50	8.12						
	Switch-As-Is Conversion rate per UNE Loop, Single LSR, (per DS0)			NTCVG	URESL		5.69	5.69								
	Switch-As-Is Conversion rate per UNE Loop, Spreadsheet, (per DS0)			NTCVG	URESP		5.69	5.69								
	CLEC to CLEC Conversion Charge without outside dispatch			NTCVG	UREWO		87.72	36.36								
4-WIRE DS1 DIGITAL LOOP - COMMINGLING																
	4-Wire DS1 Digital Loop - Zone 1		1	NTCD1	USLXX	49.41	211.72	72.42	38.20	7.19						
	4-Wire DS1 Digital Loop - Zone 2		2	NTCD1	USLXX	52.55	211.72	72.42	38.20	7.19						
	4-Wire DS1 Digital Loop - Zone 3		3	NTCD1	USLXX	68.40	211.72	72.42	38.20	7.19						
	Switch-As-Is Conversion rate per UNE Loop, Single LSR, (per DS1)			NTCD1	URESL		5.69	5.69								
	Switch-As-Is Conversion rate per UNE Loop, Spreadsheet, (per DS1)			NTCD1	URESP		5.69	5.69								
	CLEC to CLEC Conversion Charge without outside dispatch			NTCD1	UREWO		100.91	42.97								
4-WIRE 19.2, 56 OR 64 KBPS DIGITAL GRADE LOOP - COMMINGLING																
	4 Wire Unbundled Digital Loop 2.4 Kbps - Zone 1		1	NTCUD	UDL2X	25.81	196.47	36.96	18.80	7.19						
	4 Wire Unbundled Digital Loop 2.4 Kbps - Zone 2		2	NTCUD	UDL2X	31.54	196.47	36.96	18.80	7.19						
	4 Wire Unbundled Digital Loop 2.4 Kbps - Zone 3		3	NTCUD	UDL2X	42.38	196.47	36.96	18.80	7.19						
	4 Wire Unbundled Digital Loop 4.8 Kbps - Zone 1		1	NTCUD	UDL4X	25.81	196.47	36.96	18.80	7.19						
	4 Wire Unbundled Digital Loop 4.8 Kbps - Zone 2		2	NTCUD	UDL4X	31.54	196.47	36.96	18.80	7.19						
	4 Wire Unbundled Digital Loop 4.8 Kbps - Zone 3		3	NTCUD	UDL4X	42.38	196.47	36.96	18.80	7.19						
	4 Wire Unbundled Digital Loop 9.6 Kbps - Zone 1		1	NTCUD	UDL9X	25.81	196.47	36.96	18.80	7.19						
	4 Wire Unbundled Digital Loop 9.6 Kbps - Zone 2		2	NTCUD	UDL9X	31.54	196.47	36.96	18.80	7.19						
	4 Wire Unbundled Digital Loop 9.6 Kbps - Zone 3		3	NTCUD	UDL9X	42.38	196.47	36.96	18.80	7.19						
	4 Wire Unbundled Digital 19.2 Kbps - Zone 1		1	NTCUD	UDL19	25.81	196.47	36.96	18.80	7.19						
	4 Wire Unbundled Digital 19.2 Kbps - Zone 2		2	NTCUD	UDL19	31.54	196.47	36.96	18.80	7.19						
	4 Wire Unbundled Digital 19.2 Kbps - Zone 3		3	NTCUD	UDL19	42.38	196.47	36.96	18.80	7.19						
	4 Wire Unbundled Digital Loop 56 Kbps - Zone 1		1	NTCUD	UDL56	25.81	196.47	36.96	18.80	7.19						
	4 Wire Unbundled Digital Loop 56 Kbps - Zone 2		2	NTCUD	UDL56	31.54	196.47	36.96	18.80	7.19						
	4 Wire Unbundled Digital Loop 56 Kbps - Zone 3		3	NTCUD	UDL56	42.38	196.47	36.96	18.80	7.19						
	4 Wire Unbundled Digital Loop 64 Kbps - Zone 1		1	NTCUD	UDL64	25.81	196.47	36.96	18.80	7.19						
	4 Wire Unbundled Digital Loop 64 Kbps - Zone 2		2	NTCUD	UDL64	31.54	196.47	36.96	18.80	7.19						

CATEGORY		RATE ELEMENTS	Interim	Zone	BCS	USOC	RATES($)					Svc Order Submitted Elec per LSR	Svc Order Submitted Manually per LSR	Incremental Charge - Manual Svc Order vs. Electronic-1st	Incremental Charge - Manual Svc Order vs. Electronic-Add'l	Incremental Charge - Manual Svc Order vs. Electronic-Disc 1st	Incremental Charge - Manual Svc Order vs. Electronic-Disc Add'l
							Rec	Nonrecurring		Nonrecurring Disconnect		OSS Rates($)					
								First	Add'l	First	Add'l	SOMEC	SOMAN	SOMAN	SOMAN	SOMAN	SOMAN
		4 Wire Unbundled Digital Loop 64 Kbps - Zone 3		3	NTCUD	UDL64	42.38	196.47	36.96	18.80	7.19						
		Switch-As-Is Conversion rate per UNE Loop, Single LSR, (per DS0)			NTCUD	URESL		5.69	5.69								
		Switch-As-Is Conversion rate per UNE Loop, Spreadsheet, (per DS0)			NTCUD	URESP		5.69	5.69								
		CLEC to CLEC Conversion Charge without outside dispatc h			NTCUD	UREWO		101.95	49.66								
		Order Coordination for Specified Conversion Time (per LSR)			NTCVG, NTCUD, NTCD1	OCOSL		57.73									
End-to-End Testing																	
LOOP MODIFICATION																	
		Unbundled Loop Modification, Removal of Load Coils - 2 Wire pair less than or equal to 18k ft, per Unbundled Loop			UAL, UHL, UCL, UEQ, ULS, UEA, UEANL, UEPSR, UEPSB	ULM2L		0.00	0.00								
		Unbundled Loop Modification Removal of Load Coils - 4 Wire less than or equal to 18K ft, per Unbundled Loop			UHL, UCL, UEA	ULM4L		0.00	0.00								
		Unbundled Loop Modification Removal of Bridged Tap Removal, per Unbundled Loop			UAL, UHL, UCL, UEQ, ULS, UEA, UEANL, UEPSR, UEPSB	ULMBT		17.91									
SUB-LOOPS																	
	Sub-Loop Distribution																
		Sub-Loop - Per Cross Box Location - CLEC Feeder Facility Set-Up			UEANL, UEF	USBSA		255.51									
		Sub-Loop - Per Cross Box Location - Per 25 Pair Panel Set-Up			UEANL, UEF	USBSB		7.29									
		Sub-Loop - Per Building Equipment Room - CLEC Feeder Facility Set-Up			UEANL	USBSC		174.92									
		Sub-Loop - Per Building Equipment Room - Per 25 Pair Panel Set-Up			UEANL	USBSD		51.56									
		Unbundled Sub-Loops, Riser Cable, 2-Wire per Loop, Working and Spare Loop Activation			UEANL	USBRC	3.71	28.43	3.85	2.20	0.01						
		Unbundled Sub-Loops, Riser Cable, 4-Wire per Loop, Working and Spare Loop Activation			UEANL	USBRD	7.90	31.04	4.79	2.27	0.01						
		Sub-Loop Distribution Per 2-Wire Analog Voice Grade Loop - Zone 1		1	UEANL	USBN2	7.45	28.43	3.85	2.20	0.01						
		Sub-Loop Distribution Per 2-Wire Analog Voice Grade Loop - Zone 2		2	UEANL	USBN2	11.18	28.43	3.85	2.20	0.01						
		Sub-Loop Distribution Per 2-Wire Analog Voice Grade Loop - Zone 3		3	UEANL	USBN2	21.46	28.43	3.85	2.20	0.01						
		Sub-Loop Distribution Per 4-Wire Analog Voice Grade Loop - Zone 1		1	UEANL	USBN4	6.91	31.04	4.79	2.27	0.01						
		Sub-Loop Distribution Per 4-Wire Analog Voice Grade Loop - Zone 2		2	UEANL	USBN4	10.98	31.04	4.79	2.27	0.01						
		Sub-Loop Distribution Per 4-Wire Analog Voice Grade Loop - Zone 3		3	UEANL	USBN4	20.32	31.04	4.79	2.27	0.01						
		Order Coordination for Unbundled Sub-Loops, per sub-loop pair			UEANL	USBMC		18.90	18.90								
		Sub-Loop 2-Wire Intrabuilding Network Cable (INC)			UEANL	USBR2	3.71	28.43	3.85	2.20	0.01						
		Order Coordination for Unbundled Sub-Loops, per sub-loop pair			UEANL	USBMC		18.90	18.90								
		Sub-Loop 4-Wire Intrabuilding Network Cable (INC)			UEANL	USBR4	7.90	31.04	4.79	2.27	0.01						
		Order Coordination for Unbundled Sub-Loops, per sub-loop pair			UEANL	USBMC		18.90	18.90								
		Loop Testing - Basic 1st Half Hour			UEANL	URET1		26.64	0.00								
		Loop Testing - Basic Additional Half Hour			UEANL	URETA		15.15	15.15								
		2 Wire Copper Unbundled Sub-Loop Distribution - Zone 1		1	UEF	UCS2X	6.88	28.43	3.85	2.20	0.01						
		2 Wire Copper Unbundled Sub-Loop Distribution - Zone 2		2	UEF	UCS2X	8.32	28.43	3.85	2.20	0.01						
		2 Wire Copper Unbundled Sub-Loop Distribution - Zone 3		3	UEF	UCS2X	10.26	28.43	3.85	2.20	0.01						

UNBUNDLED NETWORK ELEMENTS - Georgia														Attachment: 2 Exh A			
CATEGORY		RATE ELEMENTS	Interim	Zone	BCS	USOC	RATES($)					Svc Order Submitted Elec per LSR	Svc Order Submitted Manually per LSR	Incremental Charge - Manual Svc Order vs. Electronic-1st	Incremental Charge - Manual Svc Order vs. Electronic-Add'l	Incremental Charge - Manual Svc Order vs. Electronic-Disc 1st	Incremental Charge - Manual Svc Order vs. Electronic-Disc Add'l
							Rec	Nonrecurring		Nonrecurring Disconnect		OSS Rates($)					
								First	Add'l	First	Add'l	SOMEC	SOMAN	SOMAN	SOMAN	SOMAN	SOMAN
		Order Coordination for Unbundled Sub-Loops, per sub-loop pair			UEF	USBMC		18.90	18.90								
		4 Wire Copper Unbundled Sub-Loop Distribution - Zone 1		1	UEF	UCS4X	7.55	31.04	4.79	2.27	0.01						
		4 Wire Copper Unbundled Sub-Loop Distribution - Zone 2		2	UEF	UCS4X	7.12	31.04	4.79	2.27	0.01						
		4 Wire Copper Unbundled Sub-Loop Distribution - Zone 3		3	UEF	UCS4X	10.26	31.04	4.79	2.27	0.01						
		Order Coordination for Unbundled Sub-Loops, per sub-loop pair			UEF	USBMC		18.90	18.90								
		Loop tagging Service Level 1, Unbundled Copper Loop, Non-Designed and Distribution Subloops			UEF, UEANL	URETL		8.92	0.88								
		Loop Testing - Basic 1st Half Hour			UEF	URET1		26.64	0.00								
		Loop Testing - Basic Additional Half Hour			UEF	URETA		15.15	15.15								
	Unbundled Sub-Loop Modification																
		Unbundled Sub-Loop Modification - 2-W Copper Dist Load Coil/Equip Removal per 2-W PR			UEF	ULM2X		0.00	0.00								
		Unbundled Sub-loop Modification - 4-W Copper Dist Load Coil/Equip Removal per 4-W PR			UEF	ULM4X		0.00	0.00								
		Unbundled Loop Modification, Removal of bridge Tap, per unbundled loop			UEF	ULMBT		0.00	0.00								
	Unbundled Network Terminating Wire (UNTW)																
		Unbundled Network Terminating Wire (UNTW) per Pair			UENTW	UENPP	0.5325	25.10	12.27								
	Network Interface Device (NID)																
		Network Interface Device (NID) - 1-2 lines			UENTW	UND12		32.82	20.67								
		Network Interface Device (NID) - 1-6 lines			UENTW	UND16		55.97	43.82								
		Network Interface Device Cross Connect - 2 W			UENTW	UNDC2		2.45	2.45								
		Network Interface Device Cross Connect - 4W			UENTW	UNDC4		2.45	2.45								
UNE OTHER, PROVISIONING ONLY - NO RATE																	
		Unbundled Contact Name, Provisioning Only - no rate			UAL, UCL, UDC, UDL, UDN, UEA, UHL, UEANL, UEF, UEQ, UENTW, NTCVG, NTCUD, NTCD1, USL	UNECN	0.00	0.00									
		Unbundled DS1 Loop - Superframe Format Option - no rate			USL, NTCD1	CCOSF		0.00									
		Unbundled DS1 Loop - Expanded Superframe Format option - no rate			USL, NTCD1	CCOEF		0.00									
		NID - Dispatch and Service Order for NID installation			UENTW	UNDBX	0.00	0.00									
		UNTW Circuit Establishment, Provisioning Only - No Rate			UENTW	UENCE	0.00	0.00									
LOOP MAKE-UP																	
		Loop Makeup - Preordering Without Reservation, per working or spare facility queried (Manual).			UMK	UMKLW		15.18	15.18								
		Loop Makeup - Preordering With Reservation, per spare facility queried (Manual).			UMK	UMKLP		19.83	19.83								
		Loop Makeup--With or Without Reservation, per working or spare facility queried (Mechanized)			UMK	UMKMQ		0.823	0.823								
LINE SPLITTING																	
	END USER ORDERING-CENTRAL OFFICE BASED																
		Line Splitting - per line activation DLEC owned splitter			UEPSR UEPSB	UREOS	0.61										
		Line Splitting - per line activation BST owned - physical			UEPSR UEPSB	UREBP	0.0197	34.43	22.35	10.38	7.34						
		Line Splitting - per line activation BST owned - virtual			UEPSR UEPSB	UREBV	0.0188	34.43	22.35	10.38	7.34						
	END USER ORDERING - REMOTE SITE LINE SPLITTING																
		Remote Site Shared Loop Line Activation for End Users - CLEC Owned Splitter			UEPSR UEPSB	URERS	0.61	57.13	23.12	7.11	7.11						
		Remote Site Shared Loop - Subsequent Activity - CLEC Owned Splitter			UEPSR UEPSB	URERA		54.10	21.46								
	UNBUNDLED EXCHANGE ACCESS LOOP																
	2-WIRE ANALOG VOICE GRADE LOOP																
		Remote Site 2 Wire Analog Voice Grade Loop -Service Level 1-Line Splitting - CLEC Owned Splitter - Zone 1		1	UEPSR UEPSB	UEARS	6.52	28.46	3.85	2.20	0.01						

CATEGORY	RATE ELEMENTS	Interim	Zone	BCS	USOC	RATES($)					Svc Order Submitted Elec per LSR	Svc Order Submitted Manually per LSR	Incremental Charge - Manual Svc Order vs. Electronic-1st	Incremental Charge - Manual Svc Order vs. Electronic-Add'l	Incremental Charge - Manual Svc Order vs. Electronic-Disc 1st	Incremental Charge - Manual Svc Order vs. Electronic-Disc Add'l
						Rec	Nonrecurring		Nonrecurring Disconnect		OSS Rates($)					
							First	Add'l	First	Add'l	SOMEC	SOMAN	SOMAN	SOMAN	SOMAN	SOMAN
	Remote Site 2 Wire Analog Voice Grade Loop -Service Level 1-Line Splitting - CLEC Owned Splitter - Zone 2		2	UEPSR UEPSB	UEARS	10.18	28.46	3.85	2.20	0.01						
	Remote Site 2 Wire Analog Voice Grade Loop -Service Level 1-Line Splitting - CLEC Owned Splitter - Zone 3		3	UEPSR UEPSB	UEARS	19.51	28.46	3.85	2.20	0.01						
	UNE Loop Rates for Line Splitting (In Ga. PSC ordered the line splitting loop USOCs match the lower port- loop combo rates UEPLX)															
	2-Wire Voice Grade Loop (SL1) for Line Splitting - Zone 1	I	1	UEPSR UEPSB	UEALS	10.98	10.04	7.35	1.37	1.28						
	2-Wire Voice Grade Loop (SL1) for Line Splitting - Zone 1	I	1	UEPSR UEPSB	UEABS	10.98	10.04	7.35	1.37	1.28						
	2-Wire Voice Grade Loop (SL1) for Line Splitting - Zone 2	I	2	UEPSR UEPSB	UEALS	16.30	10.04	7.35	1.37	1.28						
	2-Wire Voice Grade Loop (SL1) for Line Splitting - Zone 2	I	2	UEPSR UEPSB	UEABS	16.30	10.04	7.35	1.37	1.28						
	2-Wire Voice Grade Loop (SL1)for Line Splitting - Zone 3	I	3	UEPSR UEPSB	UEALS	34.73	10.04	7.35	1.37	1.28						
	2-Wire Voice Grade Loop (SL1)for Line Splitting - Zone 3	I	3	UEPSR UEPSB	UEABS	34.73	10.04	7.35	1.37	1.28						
	PHYSICAL COLLOCATION															
	Physical Collocation-2 Wire Cross Connects (Loop) for Line Splitting			UEPSR UEPSB	PE1LS	0.0202	0.00	0.00								
	VIRTUAL COLLOCATION															
	Virtual Collocation-2 Wire Cross Connects (Loop) for Line Splitting			UEPSR UEPSB	VE1LS	0.0192	0.00	0.00	0.00	0.00						
	LINE SHARING															
	SPLITTERS-CENTRAL OFFICE BASED															
	Line Sharing Splitter, per System 96 Line Capacity			ULS	ULSDA	131.00	0.00	0.00	0.00	0.00						
	Line Sharing Splitter, per System 24 Line Capacity			ULS	ULSDB	32.00	0.00	0.00	0.00	0.00						
	Line Sharing Splitter, Per System, 8 Line Capacity			ULS	ULSD8	11.00	0.00	0.00	0.00	0.00						
	Line Sharing-DLEC Owned Splitter in CO-CFA activaton-deactivation (per LSOD)			ULS	ULSDG		72.34	0.00	68.76	0.00						
LINE SHARING																
	END USER ORDERING-CENTRAL OFFICE BASED LINE SHARING															
	Line Sharing - per Line Activation (BST Owned splitter)			ULS	ULSDC	0.61	10.51	7.70	7.00	4.20						
	Line Sharing - per Line Activation (BST Owned splitter)			ULS	ULSDT	0.61	10.51	7.70	7.00	4.20						
	Line Sharing - per Subsequent Activity per Line Rearrangement(BST Owned Splitter			ULS	ULSDS		36.23	13.23	16.94	1.69						
	Line Sharing - per Subsequent Activity per Line Rearrangement(BST Owned Splitter			ULS	ULSCS		36.23	13.23	16.94	1.69						
	Line Sharing - per Line Activation (DLEC owned Splitter)			ULS	ULSCC		29.88	16.28	12.08	7.34						
	Line Sharing - per Line Activation (DLEC owned Splitter)			ULS	ULSCT		29.88	16.28	12.08	7.34						
	REMOTE SITE HIGH FREQUENCY SPECTRUM															
	SPLITTERS-REMOTE SITE															
	Remote Site Line Share BellSouth Owned Splitter, 24 Port			ULS	ULSRB	31.64	90.65		64.74							
	Remote Site Line Share Line Activationfor End User Served at RS, BST Splitter			ULS	ULSRT		43.54	17.28	6.82	3.82						
	Remote Site Line Share Cable Pair Activation CLEC Owned at RS and Deactivation			ULS	ULSTG		75.02		47.17							
MAINTENANCE OF SERVICE																
	NOTE: The Expedite charge will be maintained commensurate with BellSouth's FCC No.1 Tariff, Section 13.3.1 as applicable.															
	No Trouble Found - per 1/2 hour increments - Basic						80.00	55.00								
	No Trouble Found - per 1/2 hour increments - Overtime						90.00	65.00								
	No Trouble Found - per 1/2 hour increments - Premium						100.00	75.00								
UNBUNDLED DEDICATED TRANSPORT																
	INTEROFFICE CHANNEL - DEDICATED TRANSPORT															
	Interoffice Channel - 2-Wire Voice Grade - per mile			U1TVX	1L5XX	0.0059										
	Interoffice Channel - 2-Wire Voice Grade - Facility Termination			U1TVX	U1TV2	13.15	48.41	19.46	16.56	4.99						
	Interoffice Channel - 2-Wire Voice Grade Rev Bat. - per mile			U1TVX	1L5XX	0.0059										
	Interoffice Channel - 2-Wire VG Rev Bat. - Facility Termination			U1TVX	U1TR2	13.15	48.41	19.46	16.56	4.99						
	Interoffice Channel - 4-Wire Voice Grade - per mile			U1TVX	1L5XX	0.0059										
	Interoffice Channel - 4- Wire Voice Grade - Facility Termination			U1TVX	U1TV4	11.01	48.41	19.46	16.56	4.99						
	Interoffice Channel - 56 kbps - per mile			U1TDX	1L5XX	0.0059										
	Interoffice Channel - 56 kbps - Facility Termination			U1TDX	U1TD5	8.00	48.41	19.46	16.56	4.99						
	Interoffice Channel - 64 kbps - per mile			U1TDX	1L5XX	0.0059										

CATEGORY	RATE ELEMENTS	Interim	Zone	BCS	USOC	RATES($)					Svc Order Submitted Elec per LSR	Svc Order Submitted Manually per LSR	Incremental Charge - Manual Svc Order vs. Electronic-1st	Incremental Charge - Manual Svc Order vs. Electronic-Add'l	Incremental Charge - Manual Svc Order vs. Electronic-Disc 1st	Incremental Charge - Manual Svc Order vs. Electronic-Disc Add'l
						Rec	Nonrecurring		Nonrecurring Disconnect		OSS Rates($)					
							First	Add'l	First	Add'l	SOMEC	SOMAN	SOMAN	SOMAN	SOMAN	SOMAN
	Interoffice Channel - 64 kbps - Facility Termination			U1TDX	U1TD6	8.00	48.41	19.46	16.56	4.99						
	Interoffice Channel - DS1 - per mile			U1TD1	1L5XX	0.1199										
	Interoffice Channel - DS1 - Facility Termination			U1TD1	U1TF1	34.93	110.92	80.20	31.33	21.71						
	Interoffice Channel - DS3 - per mile			U1TD3	1L5XX	2.63										
	Interoffice Channel - DS3 - Facility Termination			U1TD3	U1TF3	349.42	320.16	86.24	66.71	52.76						
	Interoffice Channel - STS-1 - per mile			U1TS1	1L5XX	2.63										
	Interoffice Channel - STS-1 - Facility Termination			U1TS1	U1TFS	366.43	320.16	86.24	66.71	52.76						
	UNBUNDLED DARK FIBER															
	Dark Fiber - Interoffice Transport, Per Four Fiber Strands, Per Route Mile Or Fraction Thereof			UDF, UDFCX	1L5DF	24.17										
	Dark Fiber - Interoffice Transport, Per Four Fiber Strands, Per Route Mile Or Fraction Thereof			UDF, UDFCX	UDF14		1,774.79	89.66	73.57	18.69						
HIGH CAPACITY UNBUNDLED LOCAL LOOP																
	DS-3/STS-1 UNBUNDLED LOCAL LOOP - Stand Alone															
	DS3 Unbundled Local Loop - per mile			UE3	1L5ND	11.40										
	DS3 Unbundled Local Loop - Facility Termination			UE3	UE3PX	258.44	1,751.51	131.77	112.80	75.81						
	STS-1Unbundled Local Loop - per mile			UDLSX	1L5ND	11.40										
	STS-1 Unbundled Local Loop - Facility Termination			UDLSX	UDLS1	349.42	1,751.51	131.77	112.80	75.81						
ENHANCED EXTENDED LINK (EELs)																
	Network Elements Used in Combinations															
	2-Wire VG Loop (SL2) in Combination - Zone 1		1	UNCVX	UEAL2	13.32	195.75	36.35	18.40	6.86						
	2-Wire VG Loop (SL2) in Combination - Zone 2		2	UNCVX	UEAL2	18.66	195.75	36.35	18.40	6.86						
	2-Wire VG Loop (SL2) in Combination - Zone 3		3	UNCVX	UEAL2	36.33	195.75	36.35	18.40	6.86						
	4-Wire Analog Voice Grade Loop in Combination - Zone 1		1	UNCVX	UEAL4	21.04	195.75	36.35	18.40	6.86						
	4-Wire Analog Voice Grade Loop in Combination - Zone 2		2	UNCVX	UEAL4	24.49	195.75	36.35	18.40	6.86						
	4-Wire Analog Voice Grade Loop in Combination - Zone 3		3	UNCVX	UEAL4	33.40	195.75	36.35	18.40	6.86						
	2-Wire ISDN Loop in Combination - Zone 1		1	UNCNX	U1L2X	22.73	195.75	36.35	18.40	6.86						
	2-Wire ISDN Loop in Combination - Zone 2		2	UNCNX	U1L2X	29.11	195.75	36.35	18.40	6.86						
	2-Wire ISDN Loop in Combination - Zone 3		3	UNCNX	U1L2X	46.42	195.75	36.35	18.40	6.86						
	4-Wire 56Kbps Digital Grade Loop in Combination - Zone 1		1	UNCDX	UDL56	25.81	195.75	36.35	18.40	6.86						
	4-Wire 56Kbps Digital Grade Loop in Combination - Zone 2		2	UNCDX	UDL56	31.54	195.75	36.35	18.40	6.86						
	4-Wire 56Kbps Digital Grade Loop in Combination - Zone 3		3	UNCDX	UDL56	42.38	195.75	36.35	18.40	6.86						
	4-Wire 64Kbps Digital Grade Loop in Combination - Zone 1		1	UNCDX	UDL64	25.81	195.75	36.35	18.40	6.86						
	4-Wire 64Kbps Digital Grade Loop in Combination - Zone 2		2	UNCDX	UDL64	31.54	195.75	36.35	18.40	6.86						
	4-Wire 64Kbps Digital Grade Loop in Combination - Zone 3		3	UNCDX	UDL64	42.38	195.75	36.35	18.40	6.86						
	4-Wire DS1 Digital Loop in Combination - Zone 1		1	UNC1X	USLXX	49.41	209.25	70.37	37.87	6.86						
	4-Wire DS1 Digital Loop in Combination - Zone 2		2	UNC1X	USLXX	52.55	209.25	70.37	37.87	6.86						
	4-Wire DS1 Digital Loop in Combination - Zone 3		3	UNC1X	USLXX	68.40	209.25	70.37	37.87	6.86						
	DS3 Local Loop in combination - per mile			UNC3X	1L5ND	11.40										
	DS3 Local Loop in combination - Facility Termination			UNC3X	UE3PX	258.44	1,259.23	628.22	41.49	20.74						
	STS-1 Local Loop in combination - per mile			UNCSX	1L5ND	11.40										
	STS-1 Local Loop in combination - Facility Termination			UNCSX	UDLS1	349.42	1,259.23	628.22	41.49	20.74						
	Interoffice Channel in combination - 2-wire VG - per mile			UNCVX	1L5XX	0.0059										
	Interoffice Channel in combination - 2-wire VG - Facility Termination			UNCVX	U1TV2	13.15	66.47	33.57	43.38	27.57						
	Interoffice Channel in combination - 4-wire VG - per mile			UNCVX	1L5XX	0.0059										
	Interoffice Channel in combination - 4-wire VG - Facility Termination			UNCVX	U1TV4	10.78	66.47	33.57	43.38	27.57						
	Interoffice Channel in combination - 4-wire 56 kbps - per mile			UNCDX	1L5XX	0.0059										
	Interoffice Channel in combination - 4-wire 56 kbps - Facility Termination			UNCDX	U1TD5	8.00	66.47	33.57	43.38	27.57						
	Interoffice Channel in combination - 4-wire 64 kbps - per mile			UNCDX	1L5XX	0.0059										
	Interoffice Channel in combination - 4-wire 64 kbps - Facility Termination			UNCDX	U1TD6	8.00	66.47	33.57	43.38	27.57						
	Interoffice Channel in combination - DS1 - per mile			UNC1X	1L5XX	0.1199										
	Interoffice Channel in combination - DS1 Facility Termination			UNC1X	U1TF1	34.93	87.67	45.69	43.76	27.95						
	Interoffice Channel in combination - DS3 - per mile			UNC3X	1L5XX	2.63										
	Interoffice Channel in combination - DS3 - Facility Termination			UNC3X	U1TF3	349.42	325.59	76.99	49.51	32.85						
	Interoffice Channel in combination - STS-1 - per mile			UNCSX	1L5XX	2.63										

UNBUNDLED NETWORK ELEMENTS - Georgia														Attachment: 2 Exh A			
CATEGORY		RATE ELEMENTS	Interim	Zone	BCS	USOC	RATES($)					Svc Order Submitted Elec per LSR	Svc Order Submitted Manually per LSR	Incremental Charge - Manual Svc Order vs. Electronic-1st	Incremental Charge - Manual Svc Order vs. Electronic-Add'l	Incremental Charge - Manual Svc Order vs. Electronic-Disc 1st	Incremental Charge - Manual Svc Order vs. Electronic-Disc Add'l
							Rec	Nonrecurring		Nonrecurring Disconnect		OSS Rates($)					
								First	Add'l	First	Add'l	SOMEC	SOMAN	SOMAN	SOMAN	SOMAN	SOMAN
		Interoffice Channel in combination - STS-1 Facility Termination			UNCSX	U1TFS	366.43	325.59	76.99	49.51	32.85						
ADDITIONAL NETWORK ELEMENTS																	
	Optional Features & Functions:																
		Clear Channel Capability Extended Frame Option - per DS1	I		U1TD1, ULDD1,UNC1X	CCOEF		0.00	0.00								
		Clear Channel Capability Super FrameOption - per DS1	I		U1TD1, ULDD1,UNC1X	CCOSF		0.00	0.00								
		Clear Channel Capability (SF/ESF) Option - Subsequent Activity - per DS1	I		ULDD1, U1TD1, UNC1X, USL	NRCCC		184.62	23.78	2.03	0.79						
		C-bit Parity Option - Subsequent Activity - per DS3	i		U1TD3, ULDD3, UE3, UNC3X	NRCC3		218.74	7.66	0.7591	0.00						
		DS1/DS0 Channel System			UNC1X	MQ1	71.23	86.01	0.00	0.00	0.00						
		DS3/DS1Channel System			UNC3X, UNCSX	MQ3	124.39	0.00	0.00	0.00	0.00						
		Voice Grade COCI in combination			UNCVX	1D1VG	0.479	27.30	2.90	16.85	1.04						
		Voice Grade COCI - for Stand Alone Local Loop			UEA	1D1VG	0.479	27.30	2.90	16.85	1.04						
		Voice Grade COCI - for connection to a channelized DS1 Local Channel in the same SWC as collocation			U1TUC	1D1VG	0.479	27.30	2.90	16.85	1.04						
		OCU-DP COCI (2.4-64kbs) in combination			UNCDX	1D1DD	1.02	27.30	2.90	16.85	1.04						
		OCU-DP COCI (2.4-64kbs) - for Stand Alone Local Loop			UDL	1D1DD	1.02	27.30	2.90	16.85	1.04						
		OCU-DP COCI (2.4-64kbs) - for connection to a channelized DS1 Local Channel in the same SWC as collocation			U1TUD	1D1DD	1.02	27.30	2.90	16.85	1.04						
		2-wire ISDN COCI (BRITE) in combination			UNCNX	UC1CA	1.70	27.30	2.90	16.85	1.04						
		2-wire ISDN COCI (BRITE) - for a Local Loop			UDN	UC1CA	1.70	27.30	2.90	16.85	1.04						
		2-wire ISDN COCI (BRITE) - for connection to a channelized DS1 Local Channel in the same SWC as collocation			U1TUB	UC1CA	1.70	27.30	2.90	16.85	1.04						
		DS1 COCI in combination			UNC1X	UC1D1	7.50	27.30	2.90	16.85	1.04						
		DS1 COCI - for Stand Alone Local Channel			ULDD1	UC1D1	7.50	27.30	2.90	16.85	1.04						
		DS1 COCI - for Stand Alone Interoffice Channel			U1TD1	UC1D1	7.50	27.30	2.90	16.85	1.04						
		DS1 COCI - for Stand Alone Local Loop			USL	UC1D1	7.50	27.30	2.90	16.85	1.04						
		DS1 COCI - for connection to a channelized DS1 Local Channel in the same SWC as collocation			U1TUA	UC1D1	7.50	27.30	2.90	16.85	1.04						
		Wholesale - UNE, Switch-As-Is Conversion Charge			UNCVX, UNCDX, UNC1X, UNC3X, UNCSX, UDFCX, XDH1X, HFQC6, XDD2X, XDV6X, XDDFX, XDD4X, HFRST	UNCCC		5.69	5.69	6.60	6.60						
		Unbundled Misc Rate Element, SNE SAI, Single Network Element - Switch As Is Non-recurring Charge, per circuit (LSR)	I		U1TVX, U1TDX, U1TD1, U1TD3, U1TS1, UDF, UE3	URESL		36.95	16.17								
		Unbundled Misc Rate Element, SNE SAI, Single Network Element - Switch As Is Non-recurring Charge, incremental charge per circuit on a spreadsheet	i		U1TVX, U1TDX, U1TD1, U1TD3, U1TS1, UDF, UE3	URESP		1.49	1.49								
	Access to DCS - Customer Reconfiguration (FlexServ)																
		Customer Reconfiguration Establishment						1.40		1.63							
		DS1 DCS Termination with DS0 Switching					20.08	24.87	18.91	15.02	11.94						
		DS1 DCS Termination with DS1 Switching					7.24	18.16	12.19	11.13	8.05						
		DS3 DCS Termination with DS1 Switching					128.34	24.87	18.91	15.02	11.94						
	Node (SynchroNet)																
		Node per month			UNCDX	UNCNT	13.98										
	Service Rearrangements																
		NRC - Change in Facility Assignment per circuit Service Rearrangement	I		U1TVX, U1TDX, UEA, UDL, U1TUC, U1TUD, U1TUB, ULDVX, ULDDX, UNCVX, UNCDX, UNC1X	URETD		100.91	42.97								

CATEGORY	RATE ELEMENTS	Interim	Zone	BCS	USOC	RATES($)					Svc Order Submitted Elec per LSR	Svc Order Submitted Manually per LSR	Incremental Charge - Manual Svc Order vs. Electronic-1st	Incremental Charge - Manual Svc Order vs. Electronic-Add'l	Incremental Charge - Manual Svc Order vs. Electronic-Disc 1st	Incremental Charge - Manual Svc Order vs. Electronic-Disc Add'l
						Rec	Nonrecurring		Nonrecurring Disconnect		OSS Rates($)					
							First	Add'l	First	Add'l	SOMEC	SOMAN	SOMAN	SOMAN	SOMAN	SOMAN
	NRC - Change in Facility Assignment per circuit Project Management (added to CFA per circuit if project managed)	I		U1TVX, U1TDX, UEA, UDL, U1TUC, U1TUD, U1TUB, ULDVX, ULDDX, UNCVX, UNCDX, UNC1X	URETB		3.68	3.68								
	NRC - Order Coordination Specific Time - Dedicated Transport	I		UNC1X, UNC3X	OCOSR		18.89	18.89								
	UNE Reconfiguration Change Charge per Circuit	I		UNC1X	URERC		35.00	35.00								
	UNE Reconfiguration Change Charge per Circuit Project Managed	I		UNC1X	URERP		3.68	3.68								
COMMINGLING																
	Commingling Authorization			UNCVX, UNCDX, UNC1X, UNC3X, UNCSX, U1TD1, U1TD3, U1TS1, UE3, UDLSX, U1TVX, U1TDX, U1TUB, ULDVX, ULDD1, ULDD3, ULDS1	CMGAU	0.00	0.00	0.00	0.00	0.00						
	Commingled (UNE part of single bandwidth circuit and interfaces)															
	Commingled VG COCI			XDV2X, NTCVG	1D1VG	0.479	27.30	2.90	16.85	1.04						
	Commingled Digital COCI			XDV6X, NTCUD	1D1DD	1.02	27.30	2.90	16.85	1.04						
	Commingled ISDN COCI			XDD4X	UC1CA	1.70	27.30	2.90	16.85	1.04						
	Commingled 2-wire VG Interoffice Channel			XDV2X	U1TV2	13.15	66.47	33.57	43.38	27.57						
	Commingled 4-wire VG Interoffice Channel			XDV6X	U1TV4	10.78	66.47	33.57	43.38	27.57						
	Commingled 56kbps Interoffice Channel			XDD4X	U1TD5	8.00	66.47	33.57	43.38	27.57						
	Commingled 64kbps Interoffice Channel			XDD4X	U1TD6	8.00	66.47	33.57	43.38	27.57						
	Commingled VG/DS0 Interoffice Channel Mileage			XDV2X, XDV6X, XDD4X	1L5XX	0.0059										
	Commingled 2-wire Local Loop Zone 1		1	XDV2X	UEAL2	13.32	195.75	36.35	18.40	6.86						
	Commingled 2-wire Local Loop Zone 2		2	XDV2X	UEAL2	18.66	195.75	36.35	18.40	6.86						
	Commingled 2-wire Local Loop Zone 3		3	XDV2X	UEAL2	36.33	195.75	36.35	18.40	6.86						
	Commingled 4-wire Local Loop Zone 1		1	XDV6X	UEAL4	21.04	195.75	36.35	18.40	6.86						
	Commingled 4-wire Local Loop Zone 2		2	XDV6X	UEAL4	24.49	195.75	36.35	18.40	6.86						
	Commingled 4-wire Local Loop Zone 3		3	XDV6X	UEAL4	33.40	195.75	36.35	18.40	6.86						
	Commingled 56kbps Local Loop Zone 1		1	XDD4X	UDL56	25.81	195.75	36.35	18.40	6.86						
	Commingled 56kbps Local Loop Zone 2		2	XDD4X	UDL56	31.54	195.75	36.35	18.40	6.86						
	Commingled 56kbps Local Loop Zone 3		3	XDD4X	UDL56	42.38	195.75	36.35	18.40	6.86						
	Commingled 64kbps Local Loop Zone 1		1	XDD4X	UDL64	25.81	195.75	36.35	18.40	6.86						
	Commingled 64kbps Local Loop Zone 2		2	XDD4X	UDL64	31.54	195.75	36.35	18.40	6.86						
	Commingled 64kbps Local Loop Zone 3		3	XDD4X	UDL64	42.38	195.75	36.35	18.40	6.86						
	Commingled ISDN Local Loop Zone 1		1	XDD4X	U1L2X	22.73	195.75	36.35	18.40	6.86						
	Commingled ISDN Local Loop Zone 2		2	XDD4X	U1L2X	29.11	195.75	36.35	18.40	6.86						
	Commingled ISDN Local Loop Zone 3		3	XDD4X	U1L2X	46.42	195.75	36.35	18.40	6.86						
	Commingled DS1 COCI			XDH1X, NTCD1	UC1D1	7.50	27.30	2.90	16.85	1.04						
	Commingled DS1 Interoffice Channel			XDH1X	U1TF1	34.93	87.67	45.69	43.76	27.95						
	Commingled DS1 Interoffice Channel Mileage			XDH1X	1L5XX	0.1199										
	Commingled DS1/DS0 Channel System			XDH1X	MQ1	71.23	86.01	0.00	0.00	0.00						
	Commingled DS1 Local Loop Zone 1		1	XDH1X	USLXX	49.41	209.25	70.37	37.87	6.86						
	Commingled DS1 Local Loop Zone 2		2	XDH1X	USLXX	52.55	209.25	70.37	37.87	6.86						
	Commingled DS1 Local Loop Zone 3		3	XDH1X	USLXX	68.40	209.25	70.37	37.87	6.86						
	Commingled DS3 Local Loop			HFQC6	UE3PX	258.44	1,751.51	131.77	112.80	75.81						
	Commingled DS3/STS-1 Local Loop Mileage			HFQC6, HFRST	1L5ND	11.40										
	Commingled STS-1 Local Loop			HFRST	UDLS1	349.42	1,751.51	131.77	112.80	75.81						
	Commingled DS3/DS1 Channel System			HFQC6	MQ3	124.39	0.00	0.00	0.00	0.00						
	Commingled DS3 Interoffice Channel			HFQC6	U1TF3	349.42	325.59	76.99	49.51	32.85						
	Commingled DS3 Interoffice Channel Mileage			HFQC6	1L5XX	2.63										
	Commingled STS-1Interoffice Channel			HFRST	U1TFS	366.43	325.59	76.99	49.51	32.85						

UNBUNDLED NETWORK ELEMENTS - Georgia														Attachment: 2 Exh A			
CATEGORY		RATE ELEMENTS	Interim	Zone	BCS	USOC	RATES($)					Svc Order Submitted Elec per LSR	Svc Order Submitted Manually per LSR	Incremental Charge - Manual Svc Order vs. Electronic-1st	Incremental Charge - Manual Svc Order vs. Electronic-Add'l	Incremental Charge - Manual Svc Order vs. Electronic-Disc 1st	Incremental Charge - Manual Svc Order vs. Electronic-Disc Add'l
							Rec	Nonrecurring		Nonrecurring Disconnect		OSS Rates($)					
								First	Add'l	First	Add'l	SOMEC	SOMAN	SOMAN	SOMAN	SOMAN	SOMAN
		Commingled STS-1Interoffice Channel Mileage			HFRST	1L5XX	2.63										
		Commingled Dark Fiber - Interoffice Transport, Per Four Fiber Strands, Per Route Mile Or Fraction Thereof			HEQDL	1L5DF	24.17										
		Commingled Dark Fiber - Interoffice Transport, Per Four Fiber Strands, Per Route Mile Or Fraction Thereof			HEQDL	UDF14		1,774.79	89.66	73.57	18.69						
		UNE to Commingled Conversion Tracking			XDH1X, HFQC6	CMGUN	0.00	0.00	0.00	0.00	0.00						
		SPA to Commingled Conversion Tracking			XDH1X, HFQC6	CMGSP	0.00	0.00	0.00	0.00	0.00						
LNP Query Service																	
		LNP Charge Per query					0.0008034										
		LNP Service Establishment Manual						12.49		11.09							
		LNP Service Provisioning with Point Code Establishment						574.87	293.68	251.47	184.91						
911 PBX LOCATE																	
	911 PBX LOCATE DATABASE CAPABILITY																
		Service Establishment per CLEC per End User Account			9PBDC	9PBEU		1,825.00									
		Changes to TN Range or Customer Profile			9PBDC	9PBTN		182.67									
		Per Telephone Number (Monthly)			9PBDC	9PBMM	0.07										
		Change Company (Service Provider) ID			9PBDC	9PBPC		536.23									
		PBX Locate Service Support per CLEC (Monthlt)			9PBDC	9PBMR	176.96										
		Service Order Charge			9PBDC	9PBSC		11.73									
	911 PBX LOCATE TRANSPORT COMPONENT																
	See Att 3																
	Note: Rates displaying an "I" in Interim column are interim as a result of a Commission order.																

UNBUNDLED NETWORK ELEMENTS - Kentucky														Attachment 2 Exh A:			
CATEGORY	RATE ELEMENTS	Interim	Zone	BCS	USOC	RATES($)					Svc Order Submitted Elec per LSR	Svc Order Submitted Manually per LSR	Incremental Charge - Manual Svc Order vs. Electronic-1st	Incremental Charge - Manual Svc Order vs. Electronic-Add'l	Incremental Charge - Manual Svc Order vs. Electronic-Disc 1st	Incremental Charge - Manual Svc Order vs. Electronic-Disc Add'l
							Nonrecurring		Nonrecurring Disconnect		OSS Rates($)					
						Rec	First	Add'l	First	Add'l	SOMEC	SOMAN	SOMAN	SOMAN	SOMAN	SOMAN
	The "Zone" shown in the sections for stand-alone loops or loops as part of a combination refers to Geographically Deaveraged UNE Zones. To view Geographically Deaveraged UNE Zone Designations by Central Office, refer to internet Website: http://www.interconnection.bellsouth.com/become_a_clec/html/interconnection.htm															
OPERATIONS SUPPORT SYSTEMS (OSS) - "REGIONAL RATES"																
	NOTE: (1) CLEC should contact its contract negotiator if it prefers the "state specific" OSS charges as ordered by the State Commissions. The OSS charges currently contained in this rate exhibit are the BellSouth "regional" service ordering charges. CLEC may elect either the state specific Commission ordered rates for the service ordering charges, or CLEC may elect the regional service ordering charge, however, CLEC can not obtain a mixture of the two regardless if CLEC has a interconnection contract established in															
	NOTE: (2) Any element that can be ordered electronically will be billed according to the SOMEC rate listed in this category. Please refer to BellSouth's Local Ordering Handbook (LOH) to determine if a product can be ordered electronically. For those elements that cannot be ordered electronically at present per the LOH, the listed SOMEC rate in this category reflects the charge that would be billed to a CLEC once electronic ordering capabilities come on-line for that element. Otherwise, the manual ordering charge,															
	OSS - Electronic Service Order Charge, Per Local Service Request (LSR) - UNE Only				SOMEC		3.50	0.00	3.50	0.00						
	OSS - Manual Service Order Charge, Per Local Service Request (LSR) - UNE Only				SOMAN		7.86	0.00	0.99	0.00						
UNE SERVICE DATE ADVANCEMENT CHARGE																
	NOTE: The Expedite charge will be maintained commensurate with BellSouth's FCC No.1 Tariff, Section 5 as applicable.															
	UNE Expedite Charge per Circuit or Line Assignable USOC, per Day			UAL, UEANL, UCL, UEF, UDF, UEQ, UDL, UENTW, UDN, UEA, UHL, ULC, USL, U1T12, U1T48, U1TD1, U1TD3, U1TDX, U1TO3, U1TS1, U1TVX, UC1BC, UC1BL, UC1CC, UC1CL, UC1DC, UC1DL, UC1EC, UC1EL, UC1FC, UC1FL, UC1GC, UC1GL, UC1HC, UC1HL, UDL12, UDL48, UDLO3, UDLSX, UE3, ULD12, ULD48, ULDD1, ULDD3, ULDDX, ULDO3, ULDS1, ULDVX, UNC1X, UNC3X, UNCDX, UNCNX, UNCSX, UNCVX, UNLD1, UNLD3, UXTD1, UXTD3, UXTS1, U1TUC, U1TUD, U1TUB, U1TUA,NTCVG, NTCUD, NTCD1	SDASP		200.00									
ORDER MODIFICATION CHARGE																
	Order Modification Charge (OMC)						33.37	0.00	0.00	0.00						
	Order Modification Additional Dispatch Charge (OMCAD)						150.00	0.00	0.00	0.00						
UNBUNDLED EXCHANGE ACCESS LOOP																
	2-WIRE ANALOG VOICE GRADE LOOP															
	2-Wire Analog Voice Grade Loop - Service Level 2 w/Loop or Ground Start Signaling - Zone 1		1	UEA	UEAL2	12.67	134.89	81.87	73.65	14.88						
	2-Wire Analog Voice Grade Loop - Service Level 2 w/Loop or Ground Start Signaling - Zone 2		2	UEA	UEAL2	17.45	134.89	81.87	73.65	14.88						
	2-Wire Analog Voice Grade Loop - Service Level 2 w/Loop or Ground Start Signaling - Zone 3		3	UEA	UEAL2	33.22	134.89	81.87	73.65	14.88						
	2-Wire Analog Voice Grade Loop - Service Level 2 w/Reverse Battery Signaling - Zone 1		1	UEA	UEAR2	12.67	134.89	81.87	73.65	14.88						

UNBUNDLED NETWORK ELEMENTS - Kentucky														Attachment 2 Exh A:			
CATEGORY	RATE ELEMENTS	Interim	Zone	BCS	USOC	RATES($)					Svc Order Submitted Elec per LSR	Svc Order Submitted Manually per LSR	Incremental Charge - Manual Svc Order vs. Electronic-1st	Incremental Charge - Manual Svc Order vs. Electronic-Add'l	Incremental Charge - Manual Svc Order vs. Electronic-Disc 1st	Incremental Charge - Manual Svc Order vs. Electronic-Disc Add'l
							Nonrecurring		Nonrecurring Disconnect		OSS Rates($)					
						Rec	First	Add'l	First	Add'l	SOMEC	SOMAN	SOMAN	SOMAN	SOMAN	SOMAN
	2-Wire Analog Voice Grade Loop - Service Level 2 w/Reverse Battery Signaling - Zone 2		2	UEA	UEAR2	17.45	134.89	81.87	73.65	14.88						
	2-Wire Analog Voice Grade Loop - Service Level 2 w/Reverse Battery Signaling - Zone 3		3	UEA	UEAR2	33.22	134.89	81.87	73.65	14.88						
	Switch-As-Is Conversion rate per UNE Loop, Single LSR, (per DS0)			UEA	URESL		24.96	3.52								
	Switch-As-Is Conversion rate per UNE Loop, Spreadsheet, (per DS0)			UEA	URESP		26.44	5.01								
	CLEC to CLEC Conversion Charge without outside dispatch			UEA	UREWO		87.72	36.36								
	Loop Tagging - Service Level 2 (SL2)			UEA	URETL		11.21	1.10								
4-WIRE ANALOG VOICE GRADE LOOP																
	4-Wire Analog Voice Grade Loop - Zone 1		1	UEA	UEAL4	29.26	164.11	112.36	78.91	18.66						
	4-Wire Analog Voice Grade Loop - Zone 2		2	UEA	UEAL4	34.25	164.11	112.36	78.91	18.66						
	4-Wire Analog Voice Grade Loop - Zone 3		3	UEA	UEAL4	85.06	164.11	112.36	78.91	18.66						
	Switch-As-Is Conversion rate per UNE Loop, Single LSR, (per DS0)			UEA	URESL		24.96	3.52								
	Switch-As-Is Conversion rate per UNE Loop, Spreadsheet, (per DS0)			UEA	URESP		26.44	5.01								
	CLEC to CLEC Conversion Charge without outside dispatch			UEA	UREWO		87.72	36.36								
2-WIRE ISDN DIGITAL GRADE LOOP																
	2-Wire ISDN Digital Grade Loop - Zone 1		1	UDN	U1L2X	18.44	146.77	95.02	71.38	13.83						
	2-Wire ISDN Digital Grade Loop - Zone 2		2	UDN	U1L2X	25.08	146.77	95.02	71.38	13.83						
	2-Wire ISDN Digital Grade Loop - Zone 3		3	UDN	U1L2X	42.87	146.77	95.02	71.38	13.83						
	CLEC to CLEC Conversion Charge without outside dispatch			UDN	UREWO		91.63	44.16								
2-WIRE ASYMMETRICAL DIGITAL SUBSCRIBER LINE (ADSL) COMPATIBLE LOOP																
	2 Wire Unbundled ADSL Loop including manual service inquiry & facility reservation - Zone 1		1	UAL	UAL2X	10.82	141.98	79.73	69.02	11.47						
	2 Wire Unbundled ADSL Loop including manual service inquiry & facility reservation - Zone 2		2	UAL	UAL2X	11.79	141.98	79.73	69.02	11.47						
	2 Wire Unbundled ADSL Loop including manual service inquiry & facility reservation - Zone 3		3	UAL	UAL2X	12.87	141.98	79.73	69.02	11.47						
	2 Wire Unbundled ADSL Loop without manual service inquiry & facility reservaton - Zone 1		1	UAL	UAL2W	10.82	121.18	69.00	69.09	11.54						
	2 Wire Unbundled ADSL Loop without manual service inquiry & facility reservaton - Zone 2		2	UAL	UAL2W	11.79	121.18	69.00	69.09	11.54						
	2 Wire Unbundled ADSL Loop without manual service inquiry & facility reservaton - Zone 3		3	UAL	UAL2W	12.87	121.18	69.00	69.09	11.54						
	CLEC to CLEC Conversion Charge without outside dispatch			UAL	UREWO		86.20	40.40								
2-WIRE HIGH BIT RATE DIGITAL SUBSCRIBER LINE (HDSL) COMPATIBLE LOOP																
	2 Wire Unbundled HDSL Loop including manual service inquiry & facility reservation - Zone 1		1	UHL	UHL2X	8.75	151.54	89.29	69.09	11.54						
	2 Wire Unbundled HDSL Loop including manual service inquiry & facility reservation - Zone 2		2	UHL	UHL2X	9.56	151.54	89.29	69.09	11.54						
	2 Wire Unbundled HDSL Loop including manual service inquiry & facility reservation - Zone 3		3	UHL	UHL2X	10.61	151.54	89.29	69.09	11.54						
	2 Wire Unbundled HDSL Loop without manual service inquiry and facility reservation - Zone 1		1	UHL	UHL2W	8.75	130.74	78.56	69.09	11.54						
	2 Wire Unbundled HDSL Loop without manual service inquiry and facility reservation - Zone 2		2	UHL	UHL2W	9.56	130.74	78.56	69.09	11.54						
	2 Wire Unbundled HDSL Loop without manual service inquiry and facility reservation - Zone 3		3	UHL	UHL2W	10.61	130.74	78.56	69.09	11.54						
	CLEC to CLEC Conversion Charge without outside dispatch			UHL	UREWO		86.14	40.40								
4-WIRE HIGH BIT RATE DIGITAL SUBSCRIBER LINE (HDSL) COMPATIBLE LOOP																
	4 Wire Unbundled HDSL Loop including manual service inquiry and facility reservation - Zone 1		1	UHL	UHL4X	13.95	185.75	123.50	74.95	14.69						
	4-Wire Unbundled HDSL Loop including manual service inquiry and facility reservation - Zone 2		2	UHL	UHL4X	15.68	185.75	123.50	74.95	14.69						
	4-Wire Unbundled HDSL Loop including manual service inquiry and facility reservation - Zone 3		3	UHL	UHL4X	16.98	185.75	123.50	74.95	14.69						

UNBUNDLED NETWORK ELEMENTS - Kentucky														Attachment 2 Exh A:			
CATEGORY		RATE ELEMENTS	Interim	Zone	BCS	USOC	RATES($)					Svc Order Submitted Elec per LSR	Svc Order Submitted Manually per LSR	Incremental Charge - Manual Svc Order vs. Electronic-1st	Incremental Charge - Manual Svc Order vs. Electronic-Add'l	Incremental Charge - Manual Svc Order vs. Electronic-Disc 1st	Incremental Charge - Manual Svc Order vs. Electronic-Disc Add'l
								Nonrecurring		Nonrecurring Disconnect		OSS Rates($)					
							Rec	First	Add'l	First	Add'l	SOMEC	SOMAN	SOMAN	SOMAN	SOMAN	SOMAN
		4-Wire Unbundled HDSL Loop without manual service inquiry and facility reservation - Zone 1		1	UHL	UHL4W	13.95	164.95	114.04	77.32	15.80						
		4-Wire Unbundled HDSL Loop without manual service inquiry and facility reservation - Zone 2		2	UHL	UHL4W	15.68	164.95	114.04	77.32	15.80						
		4-Wire Unbundled HDSL Loop without manual service inquiry and facility reservation - Zone 3		3	UHL	UHL4W	16.98	164.95	114.04	77.32	15.80						
		CLEC to CLEC Conversion Charge without outside dispatch			UHL	UREWO		86.14	40.40								
	4-WIRE DS1 DIGITAL LOOP																
		4-Wire DS1 Digital Loop - Zone 1		1	USL	USLXX	86.47	306.69	174.44	65.83	14.55						
		4-Wire DS1 Digital Loop - Zone 2		2	USL	USLXX	114.10	306.69	174.44	65.83	14.55						
		4-Wire DS1 Digital Loop - Zone 3		3	USL	USLXX	297.76	306.69	174.44	65.83	14.55						
		Switch-As-Is Conversion rate per UNE Loop, Single LSR, (per DS1)			USL	URESL		24.96	3.52								
		Switch-As-Is Conversion rate per UNE Loop, Spreadsheet, (per DS1)			USL	URESP		26.44	5.01								
		CLEC to CLEC Conversion Charge without outside dispatch			USL	UREWO		101.09	43.04								
	4-WIRE 19.2, 56 OR 64 KBPS DIGITAL GRADE LOOP																
		4 Wire Unbundled Digital Loop 2.4 Kbps - Zone 1		1	UDL	UDL2X	27.59	157.81	106.06	78.91	18.66						
		4 Wire Unbundled Digital Loop 2.4 Kbps - Zone 2		2	UDL	UDL2X	32.48	157.81	106.06	78.91	18.66						
		4 Wire Unbundled Digital Loop 2.4 Kbps - Zone 3		3	UDL	UDL2X	36.37	157.81	106.06	78.91	18.66						
		4 Wire Unbundled Digital Loop 4.8 Kbps - Zone 1		1	UDL	UDL4X	27.59	157.81	106.06	78.91	18.66						
		4 Wire Unbundled Digital Loop 4.8 Kbps - Zone 2		2	UDL	UDL4X	32.48	157.81	106.06	78.91	18.66						
		4 Wire Unbundled Digital Loop 4.8 Kbps - Zone 3		3	UDL	UDL4X	36.37	157.81	106.06	78.91	18.66						
		4 Wire Unbundled Digital Loop 9.6 Kbps - Zone 1		1	UDL	UDL9X	27.59	157.81	106.06	78.91	18.66						
		4 Wire Unbundled Digital Loop 9.6 Kbps - Zone 2		2	UDL	UDL9X	32.48	157.81	106.06	78.91	18.66						
		4 Wire Unbundled Digital Loop 9.6 Kbps - Zone 3		3	UDL	UDL9X	36.37	157.81	106.06	78.91	18.66						
		4 Wire Unbundled Digital 19.2 Kbps - Zone 1		1	UDL	UDL19	27.59	157.81	106.06	78.91	18.66						
		4 Wire Unbundled Digital 19.2 Kbps - Zone 2		2	UDL	UDL19	32.48	157.81	106.06	78.91	18.66						
		4 Wire Unbundled Digital 19.2 Kbps - Zone 3		3	UDL	UDL19	36.37	157.81	106.06	78.91	18.66						
		4 Wire Unbundled Digital Loop 56 Kbps - Zone 1		1	UDL	UDL56	27.59	157.81	106.06	78.91	18.66						
		4 Wire Unbundled Digital Loop 56 Kbps - Zone 2		2	UDL	UDL56	32.48	157.81	106.06	78.91	18.66						
		4 Wire Unbundled Digital Loop 56 Kbps - Zone 3		3	UDL	UDL56	36.37	157.81	106.06	78.91	18.66						
		4 Wire Unbundled Digital Loop 64 Kbps - Zone 1		1	UDL	UDL64	27.59	157.81	106.06	78.91	18.66						
		4 Wire Unbundled Digital Loop 64 Kbps - Zone 2		2	UDL	UDL64	32.48	157.81	106.06	78.91	18.66						
		4 Wire Unbundled Digital Loop 64 Kbps - Zone 3		3	UDL	UDL64	36.37	157.81	106.06	78.91	18.66						
		Switch-As-Is Conversion rate per UNE Loop, Single LSR, (per DS0)			UDL	URESL		24.96	3.52								
		Switch-As-Is Conversion rate per UNE Loop, Spreadsheet, (per DS0)			UDL	URESP		26.44	5.01								
		CLEC to CLEC Conversion Charge without outside dispatch			UDL	UREWO		102.13	49.75								
	2-WIRE Unbundled COPPER LOOP																
		2-Wire Unbundled Copper Loop-Designed including manual service inquiry & facility reservation - Zone 1		1	UCL	UCLPB	10.82	140.95	78.70	69.09	11.54						
		2-Wire Unbundled Copper Loop-Designed including manual service inquiry & facility reservation - Zone 2		2	UCL	UCLPB	11.79	140.95	78.70	69.09	11.54						
		2 Wire Unbundled Copper Loop-Designed including manual service inquiry & facility reservation - Zone 3		3	UCL	UCLPB	12.87	140.95	78.70	69.09	11.54						
		2-Wire Unbundled Copper Loop-Designed without manual service inquiry and facility reservation - Zone 1		1	UCL	UCLPW	10.82	120.15	67.97	69.09	11.54						
		2-Wire Unbundled Copper Loop-Designed without manual service inquiry and facility reservation - Zone 2		2	UCL	UCLPW	11.79	120.15	67.97	69.09	11.54						
		2-Wire Unbundled Copper Loop-Designed without manual service inquiry and facility reservation - Zone 3		3	UCL	UCLPW	12.87	120.15	67.97	69.09	11.54						
		Order Coordination for Unbundled Copper Loops (per loop)			UCL	UCLMC		9.00	9.00								
		CLEC to CLEC Conversion Charge without outside dispatch (UCL-Des)			UCL	UREWO		97.23	42.48								
	4-WIRE COPPER LOOP																
		4-Wire Copper Loop-Designed including manual service inquiry and facility reservation - Zone 1		1	UCL	UCL4S	16.92	170.31	108.06	74.95	14.69						

UNBUNDLED NETWORK ELEMENTS - Kentucky														Attachment 2 Exh A:			
CATEGORY	RATE ELEMENTS	Interim	Zone	BCS	USOC	RATES($)					Svc Order Submitted Elec per LSR	Svc Order Submitted Manually per LSR	Incremental Charge - Manual Svc Order vs. Electronic-1st	Incremental Charge - Manual Svc Order vs. Electronic-Add'l	Incremental Charge - Manual Svc Order vs. Electronic-Disc 1st	Incremental Charge - Manual Svc Order vs. Electronic-Disc Add'l
							Nonrecurring		Nonrecurring Disconnect		OSS Rates($)					
						Rec	First	Add'l	First	Add'l	SOMEC	SOMAN	SOMAN	SOMAN	SOMAN	SOMAN
	4-Wire Copper Loop-Designed including manual service inquiry and facility reservation - Zone 2		2	UCL	UCL4S	17.36	170.31	108.06	74.95	14.69						
	4-Wire Copper Loop-Designed including manual service inquiry and facility reservation - Zone 3		3	UCL	UCL4S	28.10	170.31	108.06	74.95	14.69						
	4-Wire Copper Loop-Designed without manual service inquiry and facility reservation - Zone 1		1	UCL	UCL4W	16.92	149.52	97.33	74.95	14.69						
	4-Wire Copper Loop-Designed without manual service inquiry and facility reservation - Zone 2		2	UCL	UCL4W	17.36	149.52	97.33	74.95	14.69						
	4-Wire Copper Loop-Designed without manual service inquiry and facility reservation - Zone 3		3	UCL	UCL4W	28.10	149.52	97.33	74.95	14.69						
	CLEC to CLEC Conversion Charge without outside dispatch (UCL-Des)			UCL	UREWO		97.23	42.48								
	Order Coordination for Specified Conversion Time (per LSR)			UEA, UDN, UAL, UHL, UDL, USL	OCOSL		23.01									
Rearrangements																
	EEL to UNE-L Retermination, per 2 Wire Unbundled Voice Loop-SL2			UEA	UREEL		87.72	36.36								
	EEL to UNE-L Retermination, per 4 Wire Unbundled Voice Loop			UEA	UREEL		87.72	36.36								
	EEL to UNE-L Retermination, per 2 Wire ISDN Loop			UDN	UREEL		91.63	44.16								
	EEL to UNE-L Retermination, per 4 Wire Unbundled Digital Loop			UDL	UREEL		102.13	49.75								
	EEL to UNE-L Retermination, per 4 Wire Unbundled DS1 Loop			USL	UREEL		101.09	43.04								
UNE LOOP COMMINGLING																
2-WIRE ANALOG VOICE GRADE LOOP - COMMINGLING																
	2-Wire Analog Voice Grade Loop - Service Level 2 w/Loop or Ground Start Signaling - Zone 1		1	NTCVG	UEAL2	12.67	134.89	81.87	73.65	14.88						
	2-Wire Analog Voice Grade Loop - Service Level 2 w/Loop or Ground Start Signaling - Zone 2		2	NTCVG	UEAL2	17.45	134.89	81.87	73.65	14.88						
	2-Wire Analog Voice Grade Loop - Service Level 2 w/Loop or Ground Start Signaling - Zone 3		3	NTCVG	UEAL2	33.22	134.89	81.87	73.65	14.88						
	2-Wire Analog Voice Grade Loop - Service Level 2 w/Reverse Battery Signaling - Zone 1		1	NTCVG	UEAR2	12.67	134.89	81.87	73.65	14.88						
	2-Wire Analog Voice Grade Loop - Service Level 2 w/Reverse Battery Signaling - Zone 2		2	NTCVG	UEAR2	17.45	134.89	81.87	73.65	14.88						
	2-Wire Analog Voice Grade Loop - Service Level 2 w/Reverse Battery Signaling - Zone 3		3	NTCVG	UEAR2	33.22	134.89	81.87	73.65	14.88						
	Switch-As-Is Conversion rate per UNE Loop, Single LSR, (per DS0)			NTCVG	URESL		24.96	3.52								
	Switch-As-Is Conversion rate per UNE Loop, Spreadsheet, (per DS0)			NTCVG	URESP		26.44	5.01								
	CLEC to CLEC Conversion Charge without outside dispatch			NTCVG	UREWO		87.72	36.36								
	Loop Tagging - Service Level 2 (SL2)			NTCVG	URETL		11.21	1.10								
4-WIRE ANALOG VOICE GRADE LOOP - COMMINGLING																
	4-Wire Analog Voice Grade Loop - Zone 1		1	NTCVG	UEAL4	29.26	164.11	112.36	78.91	18.66						
	4-Wire Analog Voice Grade Loop - Zone 2		2	NTCVG	UEAL4	34.25	164.11	112.36	78.91	18.66						
	4-Wire Analog Voice Grade Loop - Zone 3		3	NTCVG	UEAL4	85.06	164.11	112.36	78.91	18.66						
	Switch-As-Is Conversion rate per UNE Loop, Single LSR, (per DS0)			NTCVG	URESL		24.96	3.52								
	Switch-As-Is Conversion rate per UNE Loop, Spreadsheet, (per DS0)			NTCVG	URESP		26.44	5.01								
	CLEC to CLEC Conversion Charge without outside dispatch			NTCVG	UREWO		87.72	36.36								
4-WIRE DS1 DIGITAL LOOP - COMMINGLING																
	4-Wire DS1 Digital Loop - Zone 1		1	NTCD1	USLXX	86.47	306.69	174.44	65.83	14.55						
	4-Wire DS1 Digital Loop - Zone 2		2	NTCD1	USLXX	114.10	306.69	174.44	65.83	14.55						
	4-Wire DS1 Digital Loop - Zone 3		3	NTCD1	USLXX	297.76	306.69	174.44	65.83	14.55						
	Switch-As-Is Conversion rate per UNE Loop, Single LSR, (per DS1)			NTCD1	URESL		24.96	3.52								

UNBUNDLED NETWORK ELEMENTS - Kentucky														Attachment 2 Exh A:			
CATEGORY		RATE ELEMENTS	Interim	Zone	BCS	USOC	RATES($)					Svc Order Submitted Elec per LSR	Svc Order Submitted Manually per LSR	Incremental Charge - Manual Svc Order vs. Electronic-1st	Incremental Charge - Manual Svc Order vs. Electronic-Add'l	Incremental Charge - Manual Svc Order vs. Electronic-Disc 1st	Incremental Charge - Manual Svc Order vs. Electronic-Disc Add'l
								Nonrecurring		Nonrecurring Disconnect		OSS Rates($)					
							Rec	First	Add'l	First	Add'l	SOMEC	SOMAN	SOMAN	SOMAN	SOMAN	SOMAN
		Switch-As-Is Conversion rate per UNE Loop, Spreadsheet, (per DS1)			NTCD1	URESP		26.44	5.01								
		CLEC to CLEC Conversion Charge without outside dispatch			NTCD1	UREWO		101.09	43.04								
	4-WIRE 19.2, 56 OR 64 KBPS DIGITAL GRADE LOOP - COMMINGLING																
		4 Wire Unbundled Digital Loop 2.4 Kbps - Zone 1		1	NTCUD	UDL2X	27.59	157.81	106.06	78.91	18.66						
		4 Wire Unbundled Digital Loop 2.4 Kbps - Zone 2		2	NTCUD	UDL2X	32.48	157.81	106.06	78.91	18.66						
		4 Wire Unbundled Digital Loop 2.4 Kbps - Zone 3		3	NTCUD	UDL2X	36.37	157.81	106.06	78.91	18.66						
		4 Wire Unbundled Digital Loop 4.8 Kbps - Zone 1		1	NTCUD	UDL4X	27.59	157.81	106.06	78.91	18.66						
		4 Wire Unbundled Digital Loop 4.8 Kbps - Zone 2		2	NTCUD	UDL4X	32.48	157.81	106.06	78.91	18.66						
		4 Wire Unbundled Digital Loop 4.8 Kbps - Zone 3		3	NTCUD	UDL4X	36.37	157.81	106.06	78.91	18.66						
		4 Wire Unbundled Digital Loop 9.6 Kbps - Zone 1		1	NTCUD	UDL9X	27.59	157.81	106.06	78.91	18.66						
		4 Wire Unbundled Digital Loop 9.6 Kbps - Zone 2		2	NTCUD	UDL9X	32.48	157.81	106.06	78.91	18.66						
		4 Wire Unbundled Digital Loop 9.6 Kbps - Zone 3		3	NTCUD	UDL9X	36.37	157.81	106.06	78.91	18.66						
		4 Wire Unbundled Digital 19.2 Kbps - Zone 1		1	NTCUD	UDL19	27.59	157.81	106.06	78.91	18.66						
		4 Wire Unbundled Digital 19.2 Kbps - Zone 2		2	NTCUD	UDL19	32.48	157.81	106.06	78.91	18.66						
		4 Wire Unbundled Digital 19.2 Kbps - Zone 3		3	NTCUD	UDL19	36.37	157.81	106.06	78.91	18.66						
		4 Wire Unbundled Digital Loop 56 Kbps - Zone 1		1	NTCUD	UDL56	27.59	157.81	106.06	78.91	18.66						
		4 Wire Unbundled Digital Loop 56 Kbps - Zone 2		2	NTCUD	UDL56	32.48	157.81	106.06	78.91	18.66						
		4 Wire Unbundled Digital Loop 56 Kbps - Zone 3		3	NTCUD	UDL56	36.37	157.81	106.06	78.91	18.66						
		4 Wire Unbundled Digital Loop 64 Kbps - Zone 1		1	NTCUD	UDL64	27.59	157.81	106.06	78.91	18.66						
		4 Wire Unbundled Digital Loop 64 Kbps - Zone 2		2	NTCUD	UDL64	32.48	157.81	106.06	78.91	18.66						
		4 Wire Unbundled Digital Loop 64 Kbps - Zone 3		3	NTCUD	UDL64	36.37	157.81	106.06	78.91	18.66						
		Switch-As-Is Conversion rate per UNE Loop, Single LSR, (per DS0)			NTCUD	URESL		24.96	3.52								
		Switch-As-Is Conversion rate per UNE Loop, Spreadsheet, (per DS0)			NTCUD	URESP		26.44	5.01								
		CLEC to CLEC Conversion Charge without outside dispatch			NTCUD	UREWO		102.13	49.75								
		Order Coordination for Specified Conversion Time (per LSR)			NTCVG, NTCUD, NTCD1	OCOSL		23.01									
UNBUNDLED EXCHANGE ACCESS LOOP																	
	2-WIRE ANALOG VOICE GRADE LOOP																
		2-Wire Analog Voice Grade Loop - Service Level 1- Zone 1		1	UEANL	UEAL2	10.56	46.66	22.57	26.65	7.65						
		2-Wire Analog Voice Grade Loop - Service Level 1- Zone 2		2	UEANL	UEAL2	15.34	46.66	22.57	26.65	7.65						
		2-Wire Analog Voice Grade Loop - Service Level 1- Zone 3		3	UEANL	UEAL2	31.11	46.66	22.57	26.65	7.65						
		2-Wire Analog Voice Grade Loop - Service Level 1- Zone 1		1	UEANL	UEASL	10.56	46.66	22.57	26.65	7.65						
		2-Wire Analog Voice Grade Loop - Service Level 1- Zone 2		2	UEANL	UEASL	15.34	46.66	22.57	26.65	7.65						
		2-Wire Analog Voice Grade Loop - Service Level 1- Zone 3		3	UEANL	UEASL	31.11	46.66	22.57	26.65	7.65						
		Tag Loop at End User Premise			UEANL	URETL		8.93	0.88								
		Loop Testing - Basic 1st Half Hour			UEANL	URET1		46.88	0.00								
		Loop Testing - Basic Additional Half Hour			UEANL	URETA		24.16	24.16								
		Manual Order Coordination for UVL-SL1s (per loop)			UEANL	UEAMC		9.00	9.00								
		Order Coordination for Specified Conversion Time for UVL-SL1 (per LSR)			UEANL	OCOSL		23.01	23.01								
		Unbundled Non-Design Voice Loop, billing for BST providing make-up (Engineering Information - E.I.)			UEANL	UEANM		13.49	13.49								
		CLEC to CLEC Conversion Charge Without Outside Dispatch (UVL-SL1)			UEANL	UREWO		15.78	8.94								
	2-WIRE Unbundled COPPER LOOP																
		2-Wire Unbundled Copper Loop - Non-Designed Zone 1		1	UEQ	UEQ2X	10.58	44.97	20.89	25.64	6.65						
		2 Wire Unbundled Copper Loop - Non-Designed - Zone 2		2	UEQ	UEQ2X	11.51	44.97	20.89	25.64	6.65						
		2 Wire Unbundled Copper Loop - Non-Designed - Zone 3		3	UEQ	UEQ2X	13.19	44.97	20.89	25.64	6.65						
		Tag Loop at End User Premise			UEQ	URETL		8.93	0.88								
		Loop Testing - Basic 1st Half Hour			UEQ	URET1		46.88	0.00								
		Loop Testing - Basic Additional Half Hour			UEQ	URETA		24.16	24.16								
		Manual Order Coordination 2 Wire Unbundled Copper Loop - Non-Designed (per loop)			UEQ	USBMC		9.00	9.00								
		Unbundled Copper Loop - Non-Design, billing for BST providing make-up (Engineering Information - E.I.)			UEQ	UEQMU		13.49	13.49								

UNBUNDLED NETWORK ELEMENTS - Kentucky														Attachment 2 Exh A:			
CATEGORY		RATE ELEMENTS	Interim	Zone	BCS	USOC	RATES($)					Svc Order Submitted Elec per LSR	Svc Order Submitted Manually per LSR	Incremental Charge - Manual Svc Order vs. Electronic-1st	Incremental Charge - Manual Svc Order vs. Electronic-Add'l	Incremental Charge - Manual Svc Order vs. Electronic-Disc 1st	Incremental Charge - Manual Svc Order vs. Electronic-Disc Add'l
								Nonrecurring		Nonrecurring Disconnect		OSS Rates($)					
							Rec	First	Add'l	First	Add'l	SOMEC	SOMAN	SOMAN	SOMAN	SOMAN	SOMAN
		CLEC to CLEC Conversion Charge Without Outside Dispatch (UCL-ND)			UEQ	UREWO		14.27	7.43								
LOOP MODIFICATION																	
		Unbundled Loop Modification, Removal of Load Coils - 2 Wire pair less than or equal to 18k ft, per Unbundled Loop			UAL, UHL, UCL, UEQ, ULS, UEA, UEANL, UEPSR, UEPSB	ULM2L		9.24	9.24								
		Unbundled Loop Modification Removal of Load Coils - 4 Wire less than or equal to 18K ft, per Unbundled Loop			UHL, UCL, UEA	ULM4L		9.24	9.24								
		Unbundled Loop Modification Removal of Bridged Tap Removal, per unbundled loop			UAL, UHL, UCL, UEQ, ULS, UEA, UEANL, UEPSR, UEPSB	ULMBT		10.47	10.47								
SUB-LOOPS																	
	Sub-Loop Distribution																
		Sub-Loop - Per Cross Box Location - CLEC Feeder Facility Set-Up			UEANL, UEF	USBSA		207.91	207.91								
		Sub-Loop - Per Cross Box Location - Per 25 Pair Panel Set-Up			UEANL, UEF	USBSB		12.50	12.50								
		Sub-Loop - Per Building Equipment Room - CLEC Feeder Facility Set-Up			UEANL	USBSC		80.87	80.87								
		Sub-Loop - Per Building Equipment Room - Per 25 Pair Panel Set-Up			UEANL	USBSD		45.04	45.04								
		Sub-Loop Distribution Per 2-Wire Analog Voice Grade Loop - Zone 1		1	UEANL	USBN2	6.34	85.03	39.05	59.81	7.90						
		Sub-Loop Distribution Per 2-Wire Analog Voice Grade Loop - Zone 2		2	UEANL	USBN2	9.06	85.03	39.05	59.81	7.90						
		Sub-Loop Distribution Per 2-Wire Analog Voice Grade Loop - Zone 3		3	UEANL	USBN2	14.82	85.03	39.05	59.81	7.90						
		Order Coordination for Unbundled Sub-Loops, per sub-loop pair			UEANL	USBMC		9.00	9.00								
		Sub-Loop Distribution Per 4-Wire Analog Voice Grade Loop - Zone 1		1	UEANL	USBN4	8.14	102.31	56.32	65.24	10.88						
		Sub-Loop Distribution Per 4-Wire Analog Voice Grade Loop - Zone 2		2	UEANL	USBN4	8.63	102.31	56.32	65.24	10.88						
		Sub-Loop Distribution Per 4-Wire Analog Voice Grade Loop - Zone 3		3	UEANL	USBN4	25.60	102.31	56.32	65.24	10.88						
		Order Coordination for Unbundled Sub-Loops, per sub-loop pair			UEANL	USBMC		9.00	9.00								
		Sub-Loop 2-Wire Intrabuilding Network Cable (INC)			UEANL	USBR2	2.57	68.35	22.36	59.81	7.90						
		Order Coordination for Unbundled Sub-Loops, per sub-loop pair			UEANL	USBMC		9.00	9.00								
		Sub-Loop 4-Wire Intrabuilding Network Cable (INC)			UEANL	USBR4	4.98	76.49	30.51	65.24	10.88						
		Order Coordination for Unbundled Sub-Loops, per sub-loop pair			UEANL	USBMC		9.00	9.00								
		Loop Testing - Basic 1st Half Hour			UEANL	URET1		46.88	0.00								
		Loop Testing - Basic Additional Half Hour			UEANL	URETA		24.16	24.16								
		2 Wire Copper Unbundled Sub-Loop Distribution - Zone 1		1	UEF	UCS2X	5.45	85.03	39.05	59.81	7.90						
		2 Wire Copper Unbundled Sub-Loop Distribution - Zone 2		2	UEF	UCS2X	7.06	85.03	39.05	59.81	7.90						
		2 Wire Copper Unbundled Sub-Loop Distribution - Zone 3		3	UEF	UCS2X	9.67	85.03	39.05	59.81	7.90						
		Order Coordination for Unbundled Sub-Loops, per sub-loop pair			UEF	USBMC		9.00	9.00								
		4 Wire Copper Unbundled Sub-Loop Distribution - Zone 1		1	UEF	UCS4X	7.09	102.31	56.32	65.24	10.88						
		4 Wire Copper Unbundled Sub-Loop Distribution - Zone 2		2	UEF	UCS4X	8.66	102.31	56.32	65.24	10.88						
		4 Wire Copper Unbundled Sub-Loop Distribution - Zone 3		3	UEF	UCS4X	19.40	102.31	56.32	65.24	10.88						
		Order Coordination for Unbundled Sub-Loops, per sub-loop pair			UEF	USBMC		9.00	9.00								
		Loop Tagging Service Level 1, Unbundled Copper Loop, Non-Designed and Distribution Subloops			UEF, UEANL	URETL		8.93	0.88								

UNBUNDLED NETWORK ELEMENTS - Kentucky														Attachment 2 Exh A:			
CATEGORY	RATE ELEMENTS	Interim	Zone	BCS	USOC	RATES($)					Svc Order Submitted Elec per LSR	Svc Order Submitted Manually per LSR	Incremental Charge - Manual Svc Order vs. Electronic-1st	Incremental Charge - Manual Svc Order vs. Electronic-Add'l	Incremental Charge - Manual Svc Order vs. Electronic-Disc 1st	Incremental Charge - Manual Svc Order vs. Electronic-Disc Add'l
							Nonrecurring		Nonrecurring Disconnect		OSS Rates($)					
						Rec	First	Add'l	First	Add'l	SOMEC	SOMAN	SOMAN	SOMAN	SOMAN	SOMAN
	Loop Testing - Basic 1st Half Hour			UEF	URET1		46.88	0.00								
	Loop Testing - Basic Additional Half Hour			UEF	URETA		24.16	24.16								
Unbundled Sub-Loop Modification																
	Unbundled Sub-Loop Modification - 2-W Copper Dist Load Coil/Equip Removal per 2-W PR			UEF	ULM2X		5.23	5.23								
	Unbundled Sub-loop Modification - 4-W Copper Dist Load Coil/Equip Removal per 4-W PR			UEF	ULM4X		5.23	5.23								
	Unbundled Loop Modification, Removal of Bridge Tap, per unbundled loop			UEF	ULMBT		7.97	7.97								
Unbundled Network Terminating Wire (UNTW)																
	Unbundled Network Terminating Wire (UNTW) per Pair			UENTW	UENPP	0.53	23.51	23.51								
Network Interface Device (NID)																
	Network Interface Device (NID) - 1-2 lines			UENTW	UND12		73.53	49.47								
	Network Interface Device (NID) - 1-6 lines			UENTW	UND16		115.96	91.91								
	Network Interface Device Cross Connect - 2 W			UENTW	UNDC2		8.56	8.56								
	Network Interface Device Cross Connect - 4W			UENTW	UNDC4		8.56	8.56								
UNE OTHER, PROVISIONING ONLY - NO RATE																
	Unbundled Contact Name, Provisioning Only - no rate			UAL, UCL, UDC, UDL, UDN, UEA, UHL, UEANL, UEF, UEQ, UENTW, NTCVG, NTCUD, NTCD1, USL	UNECN	0.00	0.00									
	Unbundled DS1 Loop - Superframe Format Option - no rate			USL, NTCD1	CCOSF	0.00	0.00									
	Unbundled DS1 Loop - Expanded Superframe Format option - no rate			USL, NTCD1	CCOEF	0.00	0.00									
	NID - Dispatch and Service Order for NID installation			UENTW	UNDBX	0.00	0.00									
	UNTW Circuit Establishment, Provisioning Only - No Rate			UENTW	UENCE	0.00	0.00									
LOOP MAKE-UP																
	Loop Makeup - Preordering Without Reservation, per working or spare facility queried (Manual).			UMK	UMKLW		23.40	23.40								
	Loop Makeup - Preordering With Reservation, per spare facility queried (Manual).			UMK	UMKLP		24.85	24.85								
	Loop Makeup--With or Without Reservation, per working or spare facility queried (Mechanized)			UMK	UMKMQ		0.67	0.67								
LINE SPLITTING																
END USER ORDERING-CENTRAL OFFICE BASED																
	Line Splitting - per line activation DLEC owned splitter			UEPSR UEPSB	UREOS	0.61										
	Line Splitting - per line activation BST owned - physical			UEPSR UEPSB	UREBP	0.61	37.02	21.20	21.10	9.87						
	Line Splitting - per line activation BST owned - virtual			UEPSR UEPSB	UREBV	0.61	37.02	21.20	21.10	9.87						
UNBUNDLED EXCHANGE ACCESS LOOP																
2-WIRE ANALOG VOICE GRADE LOOP																
	2 Wire Analog Voice Grade Loop-Service Level 1-Line Splitting-Zone 1		1	UEPSR UEPSB	UEALS	10.56	46.66	22.57	26.65	7.65						
	2 Wire Analog Voice Grade Loop-Service Level 1-Line Splitting-Zone 1		1	UEPSR UEPSB	UEABS	10.56	46.66	22.57	26.65	7.65						
	2 Wire Analog Voice Grade Loop- Service Level 1-Line Splitting-Zone 2		2	UEPSR UEPSB	UEALS	15.34	46.66	22.57	26.65	7.65						
	2 Wire Analog Voice Grade Loop- Service Level 1-Line Splitting-Zone 2		2	UEPSR UEPSB	UEABS	15.34	46.66	22.57	26.65	7.65						
	2 Wire Analog Voice Grade Loop-Service Level 1-Line Splitting-Zone 3		3	UEPSR UEPSB	UEALS	31.11	46.66	22.57	26.65	7.65						
	2 Wire Analog Voice Grade Loop-Service Level 1-Line Splitting-Zone 3		3	UEPSR UEPSB	UEABS	31.11	46.66	22.57	26.65	7.65						
PHYSICAL COLLOCATION																
	Physical Collocation-2 Wire Cross Connects (Loop) for Line Splitting			UEPSR UEPSB	PE1LS	0.0333	24.68	23.68	12.14	10.95						
VIRTUAL COLLOCATION																

UNBUNDLED NETWORK ELEMENTS - Kentucky														Attachment 2 Exh A:			
CATEGORY		RATE ELEMENTS	Interim	Zone	BCS	USOC	RATES($)					Svc Order Submitted Elec per LSR	Svc Order Submitted Manually per LSR	Incremental Charge - Manual Svc Order vs. Electronic-1st	Incremental Charge - Manual Svc Order vs. Electronic-Add'l	Incremental Charge - Manual Svc Order vs. Electronic-Disc 1st	Incremental Charge - Manual Svc Order vs. Electronic-Disc Add'l
								Nonrecurring		Nonrecurring Disconnect		OSS Rates($)					
							Rec	First	Add'l	First	Add'l	SOMEC	SOMAN	SOMAN	SOMAN	SOMAN	SOMAN
		Virtual Collocation-2 Wire Cross Connects (Loop) for Line Splitting			UEPSR UEPSB	VE1LS	0.0309	24.68	23.68	12.14	10.95						
MAINTENANCE OF SERVICE																	
	NOTE: The Expedite charge will be maintained commensurate with BellSouth's FCC No.1 Tariff, Section 13.3.1 as applicable.																
		No Trouble Found - per 1/2 hour increments - Basic						80.00	55.00								
		No Trouble Found - per 1/2 hour increments - Overtime						90.00	65.00								
		No Trouble Found - per 1/2 hour increments - Premium						100.00	75.00								
UNBUNDLED DEDICATED TRANSPORT																	
	INTEROFFICE CHANNEL - DEDICATED TRANSPORT																
		Interoffice Channel - 2-Wire Voice Grade - per mile			U1TVX	1L5XX	0.01										
		Interoffice Channel - 2-Wire Voice Grade - Facility Termination			U1TVX	U1TV2	29.11	47.34	31.78	22.77	8.75						
		Interoffice Channel - 2-Wire Voice Grade Rev Bat. - per mile			U1TVX	1L5XX	0.01										
		Interoffice Channel - 2-Wire VG Rev Bat. - Facility Termination			U1TVX	U1TR2	29.11	47.34	31.78	22.77	8.75						
		Interoffice Channel - 4-Wire Voice Grade - per mile			U1TVX	1L5XX	0.01										
		Interoffice Channel - 4- Wire Voice Grade - Facility Termination			U1TVX	U1TV4	25.86	47.34	31.78	22.77	8.75						
		Interoffice Channel - 56 kbps - per mile			U1TDX	1L5XX	0.0115										
		Interoffice Channel - 56 kbps - Facility Termination			U1TDX	U1TD5	20.97	47.34	31.78	22.77	8.75						
		Interoffice Channel - 64 kbps - per mile			U1TDX	1L5XX	0.0115										
		Interoffice Channel - 64 kbps - Facility Termination			U1TDX	U1TD6	20.97	47.34	31.78	22.77	8.75						
		Interoffice Channel - DS1 - per mile			U1TD1	1L5XX	0.23										
		Interoffice Channel - DS1 - Facility Termination			U1TD1	U1TF1	96.04	105.52	98.46	23.09	20.49						
		Interoffice Channel - DS3 - per mile			U1TD3	1L5XX	4.97										
		Interoffice Channel - DS3 - Facility Termination			U1TD3	U1TF3	1,175.15	335.40	219.24	89.57	87.75						
		Interoffice Channel - STS-1 - per mile			U1TS1	1L5XX	4.97										
		Interoffice Channel - STS-1 - Facility Termination			U1TS1	U1TFS	1,149.51	335.40	219.24	89.57	87.75						
	UNBUNDLED DARK FIBER																
		Dark Fiber - Interoffice Transport, Per Four Fiber Strands, Per Route Mile Or Fraction Thereof			UDF, UDFCX	1L5DF	30.74										
		Dark Fiber - Interoffice Transport, Per Four Fiber Strands, Per Route Mile Or Fraction Thereof			UDF, UDFCX	UDF14		732.53	192.67	377.27	241.67						
HIGH CAPACITY UNBUNDLED LOCAL LOOP																	
	DS-3/STS-1 UNBUNDLED LOCAL LOOP - Stand Alone																
		DS3 Unbundled Local Loop - per mile			UE3	1L5ND	9.25										
		DS3 Unbundled Local Loop - Facility Termination			UE3	UE3PX	308.31	551.38	338.08	173.00	120.42						
		STS-1Unbundled Local Loop - per mile			UDLSX	1L5ND	9.25										
		STS-1 Unbundled Local Loop - Facility Termination			UDLSX	UDLS1	320.51	551.38	338.08	173.00	120.42						
ENHANCED EXTENDED LINK (EELs)																	
	Network Elements Used in Combinations																
		2-Wire VG Loop (SL2) in Combination - Zone 1		1	UNCVX	UEAL2	12.67	125.22	60.48	59.69	7.84						
		2-Wire VG Loop (SL2) in Combination - Zone 2		2	UNCVX	UEAL2	17.45	125.22	60.48	59.69	7.84						
		2-Wire VG Loop (SL2) in Combination - Zone 3		3	UNCVX	UEAL2	33.22	125.22	60.48	59.69	7.84						
		4-Wire Analog Voice Grade Loop in Combination - Zone 1		1	UNCVX	UEAL4	29.26	125.22	60.48	59.69	7.84						
		4-Wire Analog Voice Grade Loop in Combination - Zone 2		2	UNCVX	UEAL4	34.25	125.22	60.48	59.69	7.84						
		4-Wire Analog Voice Grade Loop in Combination - Zone 3		3	UNCVX	UEAL4	85.06	125.22	60.48	59.69	7.84						
		2-Wire ISDN Loop in Combination - Zone 1		1	UNCNX	U1L2X	18.44	125.22	60.48	59.69	7.84						
		2-Wire ISDN Loop in Combination - Zone 2		2	UNCNX	U1L2X	25.08	125.22	60.48	59.69	7.84						
		2-Wire ISDN Loop in Combination - Zone 3		3	UNCNX	U1L2X	42.87	125.22	60.48	59.69	7.84						
		4-Wire 56Kbps Digital Grade Loop in Combination - Zone 1		1	UNCDX	UDL56	27.59	125.22	60.48	59.69	7.84						
		4-Wire 56Kbps Digital Grade Loop in Combination - Zone 2		2	UNCDX	UDL56	32.48	125.22	60.48	59.69	7.84						
		4-Wire 56Kbps Digital Grade Loop in Combination - Zone 3		3	UNCDX	UDL56	36.37	125.22	60.48	59.69	7.84						
		4-Wire 64Kbps Digital Grade Loop in Combination - Zone 1		1	UNCDX	UDL64	27.59	125.22	60.48	59.69	7.84						
		4-Wire 64Kbps Digital Grade Loop in Combination - Zone 2		2	UNCDX	UDL64	32.48	125.22	60.48	59.69	7.84						
		4-Wire 64Kbps Digital Grade Loop in Combination - Zone 3		3	UNCDX	UDL64	36.37	125.22	60.48	59.69	7.84						
		4-Wire DS1 Digital Loop in Combination - Zone 1		1	UNC1X	USLXX	86.47	210.70	114.60	63.96	17.97						
		4-Wire DS1 Digital Loop in Combination - Zone 2		2	UNC1X	USLXX	114.10	210.70	114.60	63.96	17.97						
		4-Wire DS1 Digital Loop in Combination - Zone 3		3	UNC1X	USLXX	297.76	210.70	114.60	63.96	17.97						
		DS3 Local Loop in combination - per mile			UNC3X	1L5ND	9.25										

UNBUNDLED NETWORK ELEMENTS - Kentucky														Attachment 2 Exh A:			
CATEGORY		RATE ELEMENTS	Interim	Zone	BCS	USOC	RATES($)					Svc Order Submitted Elec per LSR	Svc Order Submitted Manually per LSR	Incremental Charge - Manual Svc Order vs. Electronic-1st	Incremental Charge - Manual Svc Order vs. Electronic-Add'l	Incremental Charge - Manual Svc Order vs. Electronic-Disc 1st	Incremental Charge - Manual Svc Order vs. Electronic-Disc Add'l
								Nonrecurring		Nonrecurring Disconnect		OSS Rates($)					
							Rec	First	Add'l	First	Add'l	SOMEC	SOMAN	SOMAN	SOMAN	SOMAN	SOMAN
		DS3 Local Loop in combination - Facility Termination			UNC3X	UE3PX	308.31	237.36	147.69	83.43	32.67						
		STS-1 Local Loop in combination - per mile			UNCSX	1L5ND	9.25										
		STS-1 Local Loop in combination - Facility Termination			UNCSX	UDLS1	320.51	237.36	147.69	83.43	32.67						
		Interoffice Channel in combination - 2-wire VG - per mile			UNCVX	1L5XX	0.01										
		Interoffice Channel in combination - 2-wire VG - Facility Termination			UNCVX	U1TV2	23.95	98.09	53.67	56.31	22.42						
		Interoffice Channel in combination - 4-wire VG - per mile			UNCVX	1L5XX	0.01										
		Interoffice Channel in combination - 4-wire VG - Facility Termination			UNCVX	U1TV4	21.28	98.09	53.67	56.31	22.42						
		Interoffice Channel in combination - 4-wire 56 kbps - per mile			UNCDX	1L5XX	0.01										
		Interoffice Channel in combination - 4-wire 56 kbps - Facility Termination			UNCDX	U1TD5	17.25	98.09	53.67	56.31	22.42						
		Interoffice Channel in combination - 4-wire 64 kbps - per mile			UNCDX	1L5XX	0.01										
		Interoffice Channel in combination - 4-wire 64 kbps - Facility Termination			UNCDX	U1TD6	17.25	98.09	53.67	56.31	22.42						
		Interoffice Channel in combination - DS1 - per mile			UNC1X	1L5XX	0.19										
		Interoffice Channel in combination - DS1 Facility Termination			UNC1X	U1TF1	79.02	181.24	123.53	56.72	22.32						
		Interoffice Channel in combination - DS3 - per mile			UNC3X	1L5XX	4.09										
		Interoffice Channel in combination - DS3 - Facility Termination			UNC3X	U1TF3	966.89	350.56	141.58	48.00	23.39						
		Interoffice Channel in combination - STS-1 - per mile			UNCSX	1L5XX	4.09										
		Interoffice Channel in combination - STS-1 Facility Termination			UNCSX	U1TFS	945.79	350.56	141.58	48.00	23.39						
ADDITIONAL NETWORK ELEMENTS																	
	Optional Features & Functions:																
		Clear Channel Capability Extended Frame Option - per DS1	I		U1TD1, ULDD1,UNC1X	CCOEF		0.00	0.00	0.00	0.00						
		Clear Channel Capability Super FrameOption - per DS1	I		U1TD1, ULDD1,UNC1X	CCOSF		0.00	0.00	0.00	0.00						
		Clear Channel Capability (SF/ESF) Option - Subsequent Activity - per DS1	I		ULDD1, U1TD1, UNC1X, USL	NRCCC		184.91	23.82	1.99	0.78						
		C-bit Parity Option - Subsequent Activity - per DS3	i		U1TD3, ULDD3, UE3, UNC3X	NRCC3		205.70	7.20	0.6924	0.00						
		DS1/DS0 Channel System			UNC1X	MQ1	113.33	57.26	14.74	1.86	1.67						
		DS3/DS1Channel System			UNC3X, UNCSX	MQ3	158.20	115.48	56.53	15.12	5.30						
		Voice Grade COCI in combination			UNCVX	1D1VG	0.6228	6.71	4.84								
		Voice Grade COCI - for Stand Alone Local Loop			UEA	1D1VG	0.6228	6.71	4.84								
		Voice Grade COCI - for connection to a channelized DS1 Local Channel in the same SWC as collocation			U1TUC	1D1VG	0.6228	6.71	4.84								
		OCU-DP COCI (2.4-64kbs) in combination			UNCDX	1D1DD	1.32	6.71	4.84								
		OCU-DP COCI (2.4-64kbs) - for Stand Alone Local Loop			UDL	1D1DD	1.32	6.71	4.84								
		OCU-DP COCI (2.4-64kbs) - for connection to a channelized DS1 Local Channel in the same SWC as collocation			U1TUD	1D1DD	1.32	6.71	4.84								
		2-wire ISDN COCI (BRITE) in combination			UNCNX	UC1CA	2.84	6.71	4.84								
		2-wire ISDN COCI (BRITE) - for a Local Loop			UDN	UC1CA	2.84	6.71	4.84								
		2-wire ISDN COCI (BRITE) - for connection to a channelized DS1 Local Channel in the same SWC as collocation			U1TUB	UC1CA	2.84	6.71	4.84								
		DS1 COCI in combination			UNC1X	UC1D1	11.80	6.71	4.84								
		DS1 COCI - for Stand Alone Local Channel			ULDD1	UC1D1	11.80	6.71	4.84								
		DS1 COCI - for Stand Alone Interoffice Channel			U1TD1	UC1D1	11.80	6.71	4.84								
		DS1 COCI - for Stand Alone Local Loop			USL	UC1D1	11.80	6.71	4.84								
		DS1 COCI - for connection to a channelized DS1 Local Channel in the same SWC as collocation			U1TUA	UC1D1	11.80	6.71	4.84								
		Wholesale to UNE, Switch-As-Is Conversion Charge			UNCVX, U1TVX, UNCDX, U1TDX, UNC1X, U1TD1,UNC3X, U1TD3, UNCSX, U1TS1, UDF,UDFCX	UNCCC		8.98	8.98								

UNBUNDLED NETWORK ELEMENTS - Kentucky														Attachment 2 Exh A:			
CATEGORY		RATE ELEMENTS	Interim	Zone	BCS	USOC	RATES($)					Svc Order Submitted Elec per LSR	Svc Order Submitted Manually per LSR	Incremental Charge - Manual Svc Order vs. Electronic-1st	Incremental Charge - Manual Svc Order vs. Electronic-Add'l	Incremental Charge - Manual Svc Order vs. Electronic-Disc 1st	Incremental Charge - Manual Svc Order vs. Electronic-Disc Add'l
								Nonrecurring		Nonrecurring Disconnect		OSS Rates($)					
							Rec	First	Add'l	First	Add'l	SOMEC	SOMAN	SOMAN	SOMAN	SOMAN	SOMAN
		Unbundled Misc Rate Element, SNE SAI, Single Network Element - Switch As Is Non-recurring Charge, per circuit (LSR)	i		U1TVX, U1TDX, U1TD1, U1TD3, U1TS1, UDF, UE3	URESL		36.80	16.10								
		Unbundled Misc Rate Element, SNE SAI, Single Network Element - Switch As Is Non-recurring Charge, incremental charge per circuit on a spreadsheet	i		U1TVX, U1TDX, U1TD1, U1TD3, U1TS1, UDF, UE3	URESP		1.49	1.49								
		UNE Reconfiguration Change Charge per Circuit	I		UNC1X	URERC		35.00	35.00								
		UNE Reconfiguration Change Charge per Circuit Project Managed	I		UNC1X	URERP		1.49	1.49								
	Access to DCS - Customer Reconfiguration (FlexServ)																
		Customer Reconfiguration Establishment						1.63		2.03							
		DS1 DCS Termination with DS0 Switching					25.69	32.88	23.58	21.09	15.88						
		DS1 DCS Termination with DS1 Switching					12.41	25.07	15.76	16.23	11.02						
		DS3 DCS Termination with DS1 Switching					154.20	32.88	23.58	21.09	15.88						
	Service Rearrangements																
		NRC - Change in Facility Assignment per circuit Service Rearrangement	I		U1TVX, U1TDX, UEA, UDL, U1TUC, U1TUD, U1TUB, ULDVX, ULDDX, UNCVX, UNCDX, UNC1X	URETD		101.09	43.04								
		NRC - Change in Facility Assignment per circuit Project Management (added to CFA per circuit if project managed)	I		U1TVX, U1TDX, UEA, UDL, U1TUC, U1TUD, U1TUB, ULDVX, ULDDX, UNCVX, UNCDX, UNC1X	URETB		1.28	1.28								
		NRC - Order Coordination Specific Time - Dedicated Transport	I		UNC1X	OCOSR		18.87	18.87								
COMMINGLING																	
		Commingling Authorization			UNCVX, UNCDX, UNC1X, UNC3X, UNCSX, U1TD1, U1TD3, U1TS1, UE3, UDLSX, U1TVX, U1TDX, U1TUB, ULDVX, ULDD1, ULDD3, ULDS1	CMGAU	0.00	0.00	0.00	0.00	0.00						
	Commingled (UNE part of single bandwidth circuit)																
		Commingled VG COCI			XDV2X, NTCVG	1D1VG	0.6228	6.71	4.84								
		Commingled Digital COCI			XDV6X, NTCUD	1D1DD	1.32	6.71	4.84								
		Commingled ISDN COCI			XDD4X	UC1CA	2.84	6.71	4.84								
		Commingled 2-wire VG Interoffice Channel			XDV2X	U1TV2	23.95	98.09	53.67	56.31	22.42						
		Commingled 4-wire VG Interoffice Channel			XDV6X	U1TV4	21.28	98.09	53.67	56.31	22.42						
		Commingled 56kbps Interoffice Channel			XDD4X	U1TD5	20.97	98.09	53.67	56.31	22.42						
		Commingled 64kbps Interoffice Channel			XDD4X	U1TD6	17.25	98.09	53.67	56.31	22.42						
		Commingled VG/DS0 Interoffice Channel Mileage			XDV2X, XDV6X, XDD4X	1L5XX	0.01										
		Commingled 2-wire Local Loop Zone 1		1	XDV2X	UEAL2	12.67	125.22	60.48	59.69	7.84						
		Commingled 2-wire Local Loop Zone 2		2	XDV2X	UEAL2	17.45	125.22	60.48	59.69	7.84						
		Commingled 2-wire Local Loop Zone 3		3	XDV2X	UEAL2	33.22	125.22	60.48	59.69	7.84						
		Commingled 4-wire Local Loop Zone 1		1	XDV6X	UEAL4	29.26	125.22	60.48	59.69	7.84						
		Commingled 4-wire Local Loop Zone 2		2	XDV6X	UEAL4	34.25	125.22	60.48	59.69	7.84						
		Commingled 4-wire Local Loop Zone 3		3	XDV6X	UEAL4	85.06	125.22	60.48	59.69	7.84						
		Commingled 56kbps Local Loop Zone 1		1	XDD4X	UDL56	27.59	125.22	60.48	59.69	7.84						
		Commingled 56kbps Local Loop Zone 2		2	XDD4X	UDL56	32.48	125.22	60.48	59.69	7.84						
		Commingled 56kbps Local Loop Zone 3		3	XDD4X	UDL56	36.37	125.22	60.48	59.69	7.84						
		Commingled 64kbps Local Loop Zone 1		1	XDD4X	UDL64	27.59	125.22	60.48	59.69	7.84						
		Commingled 64kbps Local Loop Zone 2		2	XDD4X	UDL64	32.48	125.22	60.48	59.69	7.84						

UNBUNDLED NETWORK ELEMENTS - Kentucky														Attachment 2 Exh A:			
CATEGORY	RATE ELEMENTS	Interim	Zone	BCS	USOC	RATES($)					Svc Order Submitted Elec per LSR	Svc Order Submitted Manually per LSR	Incremental Charge - Manual Svc Order vs. Electronic-1st	Incremental Charge - Manual Svc Order vs. Electronic-Add'l	Incremental Charge - Manual Svc Order vs. Electronic-Disc 1st	Incremental Charge - Manual Svc Order vs. Electronic-Disc Add'l
							Nonrecurring		Nonrecurring Disconnect		OSS Rates($)					
						Rec	First	Add'l	First	Add'l	SOMEC	SOMAN	SOMAN	SOMAN	SOMAN	SOMAN
	Commingled 64kbps Local Loop Zone 3		3	XDD4X	UDL64	36.37	125.22	60.48	59.69	7.84						
	Commingled ISDN Local Loop Zone 1		1	XDD4X	U1L2X	18.44	125.22	60.48	59.69	7.84						
	Commingled ISDN Local Loop Zone 2		2	XDD4X	U1L2X	25.08	125.22	60.48	59.69	7.84						
	Commingled ISDN Local Loop Zone 3		3	XDD4X	U1L2X	42.87	125.22	60.48	59.69	7.84						
	Commingled DS1 COCI			XDH1X, NTCD1	UC1D1	11.80	6.71	4.84								
	Commingled DS1 Interoffice Channel			XDH1X	U1TF1	79.02	181.24	123.53	56.72	22.32						
	Commingled DS1 Interoffice Channel Mileage			XDH1X	1L5XX	0.19										
	Commingled DS1/DS0 Channel System			XDH1X	MQ1	113.33	57.26	14.74	1.86	1.67						
	Commingled DS1 Local Loop Zone 1		1	XDH1X	USLXX	86.47	86.47	86.47	86.47	86.47						
	Commingled DS1 Local Loop Zone 2		2	XDH1X	USLXX	114.10	114.10	114.10	114.10	114.10						
	Commingled DS1 Local Loop Zone 3		3	XDH1X	USLXX	297.76	297.76	297.76	297.76	297.76						
	Commingled DS3 Local Loop			HFQC6	UE3PX	308.31										
	Commingled DS3/STS-1 Local Loop Mileage			HFQC6, HFRST	1L5ND	9.25										
	Commingled STS-1 Local Loop			HFRST	UDLS1	320.51	237.36	147.69	83.43	32.67						
	Commingled DS3/DS1 Channel System			HFQC6	MQ3	158.20	115.48	56.53	15.12	5.30						
	Commingled DS3 Interoffice Channel			HFQC6	U1TF3	966.89	350.56	141.58	48.00	23.39						
	Commingled DS3 Interoffice Channel Mileage			HFQC6	1L5XX	4.09										
	Commingled STS-1Interoffice Channel			HFRST	U1TFS	945.79	350.56	141.58	48.00	23.39						
	Commingled STS-1Interoffice Channel Mileage			HFRST	1L5XX	4.09										
	Commingled Dark Fiber - Interoffice Transport, Per Four Fiber Strands, Per Route Mile Or Fraction Thereof			HEQDL	1L5DF	30.74										
	Commingled Dark Fiber - Interoffice Transport, Per Four Fiber Strands, Per Route Mile Or Fraction Thereof			HEQDL	UDF14		732.53	192.67	377.27	241.67						
SIGNALING (CCS7)																
	NOTE:"bk" beside a rate indicates that the parties have agreed to bill and keep for that element pursuant to the terms and conditions in Attachment 3.															
	CCS7 Signaling Usage, Per TCAP Message					0.0000656bk										
	CCS7 Signaling Usage, Per ISUP Message					0.0000164bk										
LNP Query Service																
	LNP Charge Per query					0.0008695										
	LNP Service Establishment Manual						13.82	13.82	12.71	12.71						
	LNP Service Provisioning with Point Code Establishment						953.27	487.00	431.95	317.61						
911 PBX LOCATE																
	911 PBX LOCATE DATABASE CAPABILITY															
	Service Establishment per CLEC per End User Account			9PBDC	9PBEU		1,814.00									
	Changes to TN Range or Customer Profile			9PBDC	9PBTN		181.57									
	Per Telephone Number (Monthly)			9PBDC	9PBMM	0.07										
	Change Company (Service Provider) ID			9PBDC	9PBPC		533.00									
	PBX Locate Service Support per CLEC (MonthIt)			9PBDC	9PBMR	179.88										
	Service Order Charge			9PBDC	9PBSC		7.86									
	911 PBX LOCATE TRANSPORT COMPONENT															
	See Att 3															
	Note: Rates displaying an "I" in Interim column are interim as a result of a Commission order.															

UNBUNDLED NETWORK ELEMENTS - Louisiana														Attachment 2 Exh A:			
CATEGORY	RATE ELEMENTS	Interim	Zone	BCS	USOC	RATES($)					Svc Order Submitted Elec per LSR	Svc Order Submitted Manually per LSR	Incremental Charge - Manual Svc Order vs. Electronic-1st	Incremental Charge - Manual Svc Order vs. Electronic-Add'l	Incremental Charge - Manual Svc Order vs. Electronic-Disc 1st	Incremental Charge - Manual Svc Order vs. Electronic-Disc Add'l
							Nonrecurring		Nonrecurring Disconnect		OSS Rates($)					
						Rec	First	Add'l	First	Add'l	SOMEC	SOMAN	SOMAN	SOMAN	SOMAN	SOMAN
	The "Zone" shown in the sections for stand-alone loops or loops as part of a combination refers to Geographically Deaveraged UNE Zones. To view Geographically Deaveraged UNE Zone Designations by Central Office, refer to internet Website: http://www.interconnection.bellsouth.com/become_a_clec/html/interconnection.htm															
OPERATIONS SUPPORT SYSTEMS (OSS) - "REGIONAL RATES"																
	NOTE: (1) CLEC should contact its contract negotiator if it prefers the "state specific" OSS charges as ordered by the State Commissions. The OSS charges currently contained in this rate exhibit are the BellSouth "regional" service ordering charges. CLEC may elect either the state specific Commission ordered rates for the service ordering charges, or CLEC may elect the regional service ordering charge, however, CLEC can not obtain a mixture of the two regardless if CLEC has a interconnection contract established in															
	NOTE: (2) Any element that can be ordered electronically will be billed according to the SOMEC rate listed in this category. Please refer to BellSouth's Local Ordering Handbook (LOH) to determine if a product can be ordered electronically. For those elements that cannot be ordered electronically at present per the LOH, the listed SOMEC rate in this category reflects the charge that would be billed to a CLEC once electronic ordering capabilities come on-line for that element. Otherwise, the manual ordering charge,															
	OSS - Electronic Service Order Charge, Per Local Service Request (LSR) - UNE Only				SOMEC		3.50	0.00	3.50	0.00						
	OSS - Manual Service Order Charge, Per Local Service Request (LSR) - UNE Only				SOMAN		15.20	0.00	15.20	0.00						
UNE SERVICE DATE ADVANCEMENT CHARGE																
	NOTE: The Expedite charge will be maintained commensurate with BellSouth's FCC No.1 Tariff, Section 5 as applicable.															
	UNE Expedite Charge per Circuit or Line Assignable USOC, per Day			UAL, UEANL, UCL, UEF, UDF, UEQ, UDL, UENTW, UDN, UEA, UHL, ULC, USL, U1T12, U1T48, U1TD1, U1TD3, U1TDX, U1TO3, U1TS1, U1TVX, UC1BC, UC1BL, UC1CC, UC1CL, UC1DC, UC1DL, UC1EC, UC1EL, UC1FC, UC1FL, UC1GC, UC1GL, UC1HC, UC1HL, UDL12, UDL48, UDLO3, UDLSX, UE3, ULD12, ULD48, ULDD1, ULDD3, ULDDX, ULDO3, ULDS1, ULDVX, UNC1X, UNC3X, UNCDX, UNCNX, UNCSX, UNCVX, UNLD1, UNLD3, UXTD1, UXTD3, UXTS1, U1TUC, U1TUD, U1TUB, U1TUA,NTCVG, NTCUD, NTCD1	SDASP		200.00									
ORDER MODIFICATION CHARGE																
	Order Modification Charge (OMC)						26.21	0.00	0.00	0.00						
	Order Modification Additional Dispatch Charge (OMCAD)						150.00	0.00	0.00	0.00						
UNBUNDLED EXCHANGE ACCESS LOOP																
	2-WIRE ANALOG VOICE GRADE LOOP															
	2-Wire Analog Voice Grade Loop - Service Level 2 w/Loop or Ground Start Signaling - Zone 1		1	UEA	UEAL2	14.93	102.10	65.72								
	2-Wire Analog Voice Grade Loop - Service Level 2 w/Loop or Ground Start Signaling - Zone 2		2	UEA	UEAL2	25.35	102.10	65.72								
	2-Wire Analog Voice Grade Loop - Service Level 2 w/Loop or Ground Start Signaling - Zone 3		3	UEA	UEAL2	50.46	102.10	65.72								
	2-Wire Analog Voice Grade Loop - Service Level 2 w/Reverse Battery Signaling - Zone 1		1	UEA	UEAR2	14.93	102.10	65.72								

UNBUNDLED NETWORK ELEMENTS - Louisiana														Attachment 2 Exh A:			
CATEGORY		RATE ELEMENTS	Interim	Zone	BCS	USOC	RATES($)					Svc Order Submitted Elec per LSR	Svc Order Submitted Manually per LSR	Incremental Charge - Manual Svc Order vs. Electronic-1st	Incremental Charge - Manual Svc Order vs. Electronic-Add'l	Incremental Charge - Manual Svc Order vs. Electronic-Disc 1st	Incremental Charge - Manual Svc Order vs. Electronic-Disc Add'l
								Nonrecurring		Nonrecurring Disconnect		OSS Rates($)					
							Rec	First	Add'l	First	Add'l	SOMEC	SOMAN	SOMAN	SOMAN	SOMAN	SOMAN
		2-Wire Analog Voice Grade Loop - Service Level 2 w/Reverse Battery Signaling - Zone 2		2	UEA	UEAR2	25.35	102.10	65.72								
		2-Wire Analog Voice Grade Loop - Service Level 2 w/Reverse Battery Signaling - Zone 3		3	UEA	UEAR2	50.46	102.10	65.72								
		Switch-As-Is Conversion rate per UNE Loop, Single LSR, (per DS0)			UEA	URESL		24.98	3.52								
		Switch-As-Is Conversion rate per UNE Loop, Spreadsheet, (per DS0)			UEA	URESP		26.47	5.01								
		CLEC to CLEC Conversion Charge without outside dispatch			UEA	UREWO		87.59	36.30								
		Loop Tagging - Service Level 2 (SL2)			UEA	URETL		11.20	1.10								
	4-WIRE ANALOG VOICE GRADE LOOP																
		4-Wire Analog Voice Grade Loop - Zone 1		1	UEA	UEAL4	30.81	127.40	91.02								
		4-Wire Analog Voice Grade Loop - Zone 2		2	UEA	UEAL4	38.32	127.40	91.02								
		4-Wire Analog Voice Grade Loop - Zone 3		3	UEA	UEAL4	60.39	127.40	91.02								
		Switch-As-Is Conversion rate per UNE Loop, Single LSR, (per DS0)			UEA	URESL		24.98	3.52								
		Switch-As-Is Conversion rate per UNE Loop, Spreadsheet, (per DS0)			UEA	URESP		26.47	5.01								
		CLEC to CLEC Conversion Charge without outside dispatch			UEA	UREWO		87.59	36.30								
	2-WIRE ISDN DIGITAL GRADE LOOP																
		2-Wire ISDN Digital Grade Loop - Zone 1		1	UDN	U1L2X	22.09	113.34	76.96								
		2-Wire ISDN Digital Grade Loop - Zone 2		2	UDN	U1L2X	35.28	113.34	76.96								
		2-Wire ISDN Digital Grade Loop - Zone 3		3	UDN	U1L2X	65.18	113.34	76.96								
		CLEC to CLEC Conversion Charge without outside dispatch			UDN	UREWO		91.49	44.09								
	2-WIRE ASYMMETRICAL DIGITAL SUBSCRIBER LINE (ADSL) COMPATIBLE LOOP																
		2 Wire Unbundled ADSL Loop including manual service inquiry & facility reservation - Zone 1		1	UAL	UAL2X	12.29	117.08	68.36								
		2 Wire Unbundled ADSL Loop including manual service inquiry & facility reservation - Zone 2		2	UAL	UAL2X	14.09	117.08	68.36								
		2 Wire Unbundled ADSL Loop including manual service inquiry & facility reservation - Zone 3		3	UAL	UAL2X	15.75	117.08	68.36								
		2 Wire Unbundled ADSL Loop without manual service inquiry & facility reservaton - Zone 1		1	UAL	UAL2W	12.29	92.83	56.02								
		2 Wire Unbundled ADSL Loop without manual service inquiry & facility reservaton - Zone 2		2	UAL	UAL2W	14.09	92.83	56.02								
		2 Wire Unbundled ADSL Loop without manual service inquiry & facility reservaton - Zone 3		3	UAL	UAL2W	15.75	92.83	56.02								
		CLEC to CLEC Conversion Charge without outside dispatch			UAL	UREWO		86.07	40.34								
	2-WIRE HIGH BIT RATE DIGITAL SUBSCRIBER LINE (HDSL) COMPATIBLE LOOP																
		2 Wire Unbundled HDSL Loop including manual service inquiry & facility reservation - Zone 1		1	UHL	UHL2X	9.79	125.50	76.77								
		2 Wire Unbundled HDSL Loop including manual service inquiry & facility reservation - Zone 2		2	UHL	UHL2X	11.52	125.50	76.77								
		2 Wire Unbundled HDSL Loop including manual service inquiry & facility reservation - Zone 3		3	UHL	UHL2X	12.74	125.50	76.77								
		2 Wire Unbundled HDSL Loop without manual service inquiry and facility reservation - Zone 1		1	UHL	UHL2W	9.79	101.24	64.43								
		2 Wire Unbundled HDSL Loop without manual service inquiry and facility reservation - Zone 2		2	UHL	UHL2W	11.52	101.24	64.43								
		2 Wire Unbundled HDSL Loop without manual service inquiry and facility reservation - Zone 3		3	UHL	UHL2W	12.74	101.24	64.43								
		CLEC to CLEC Conversion Charge without outside dispatch			UHL	UREWO		86.00	40.34								
	4-WIRE HIGH BIT RATE DIGITAL SUBSCRIBER LINE (HDSL) COMPATIBLE LOOP																
		4 Wire Unbundled HDSL Loop including manual service inquiry and facility reservation - Zone 1		1	UHL	UHL4X	16.24	153.26	104.54								
		4-Wire Unbundled HDSL Loop including manual service inquiry and facility reservation - Zone 2		2	UHL	UHL4X	16.65	153.26	104.54								
		4-Wire Unbundled HDSL Loop including manual service inquiry and facility reservation - Zone 3		3	UHL	UHL4X	17.34	153.26	104.54								

UNBUNDLED NETWORK ELEMENTS - Louisiana														Attachment 2 Exh A:			
CATEGORY		RATE ELEMENTS	Interim	Zone	BCS	USOC	RATES($)					Svc Order Submitted Elec per LSR	Svc Order Submitted Manually per LSR	Incremental Charge - Manual Svc Order vs. Electronic-1st	Incremental Charge - Manual Svc Order vs. Electronic-Add'l	Incremental Charge - Manual Svc Order vs. Electronic-Disc 1st	Incremental Charge - Manual Svc Order vs. Electronic-Disc Add'l
								Nonrecurring		Nonrecurring Disconnect		OSS Rates($)					
							Rec	First	Add'l	First	Add'l	SOMEC	SOMAN	SOMAN	SOMAN	SOMAN	SOMAN
		4-Wire Unbundled HDSL Loop without manual service inquiry and facility reservation - Zone 1		1	UHL	UHL4W	16.24	129.00	92.20								
		4-Wire Unbundled HDSL Loop without manual service inquiry and facility reservation - Zone 2		2	UHL	UHL4W	16.65	129.00	92.20								
		4-Wire Unbundled HDSL Loop without manual service inquiry and facility reservation - Zone 3		3	UHL	UHL4W	17.34	129.00	92.20								
		CLEC to CLEC Conversion Charge without outside dispatch			UHL	UREWO		86.00	40.34								
	4-WIRE DS1 DIGITAL LOOP																
		4-Wire DS1 Digital Loop - Zone 1		1	USL	USLXX	85.70	245.16	152.98								
		4-Wire DS1 Digital Loop - Zone 2		2	USL	USLXX	194.96	245.16	152.98								
		4-Wire DS1 Digital Loop - Zone 3		3	USL	USLXX	491.94	245.16	152.98								
		Switch-As-Is Conversion rate per UNE Loop, Single LSR, (per DS1)			USL	URESL		24.98	3.52								
		Switch-As-Is Conversion rate per UNE Loop, Spreadsheet, (per DS1)			USL	URESP		26.47	5.01								
		CLEC to CLEC Conversion Charge without outside dispatch			USL	UREWO		100.93	42.98								
	4-WIRE 19.2, 56 OR 64 KBPS DIGITAL GRADE LOOP																
		4 Wire Unbundled Digital Loop 2.4 Kbps - Zone 1		1	UDL	UDL2X	30.99	121.86	85.48								
		4 Wire Unbundled Digital Loop 2.4 Kbps - Zone 2		2	UDL	UDL2X	36.78	121.86	85.48								
		4 Wire Unbundled Digital Loop 2.4 Kbps - Zone3		3	UDL	UDL2X	38.92	121.86	85.48								
		4 Wire Unbundled Digital Loop 4.8 Kbps -Zone 1		1	UDL	UDL4X	30.99	121.86	85.48								
		4 Wire Unbundled Digital Loop 4.8 Kbps - Zone 2		2	UDL	UDL4X	36.78	121.86	85.48								
		4 Wire Unbundled Digital Loop 4.8 Kbps - Zone 3		3	UDL	UDL4X	38.92	121.86	85.48								
		4 Wire Unbundled Digital Loop 9.6 Kbps - Zone 1		1	UDL	UDL9X	30.99	121.86	85.48								
		5 Wire Unbundled Digital Loop 9.6 Kbps - Zone 2		2	UDL	UDL9X	36.78	121.86	85.48								
		6 Wire Unbundled Digital Loop 9.6 Kbps - Zone 3		3	UDL	UDL9X	38.92	121.86	85.48								
		4 Wire Unbundled Digital 19.2 Kbps - Zone 1		1	UDL	UDL19	30.99	121.86	85.48								
		4 Wire Unbundled Digital 19.2 Kbps - Zone 2		2	UDL	UDL19	36.78	121.86	85.48								
		4 Wire Unbundled Digital 19.2 Kbps - Zone 3		3	UDL	UDL19	38.92	121.86	85.48								
		4 Wire Unbundled Digital Loop 56 Kbps - Zone 1		1	UDL	UDL56	30.99	121.86	85.48								
		4 Wire Unbundled Digital Loop 56 Kbps - Zone 2		2	UDL	UDL56	36.78	121.86	85.48								
		4 Wire Unbundled Digital Loop 56 Kbps - Zone 3		3	UDL	UDL56	38.92	121.86	85.48								
		4 Wire Unbundled Digital Loop 64 Kbps - Zone 1		1	UDL	UDL64	30.99	121.86	85.48								
		4 Wire Unbundled Digital Loop 64 Kbps - Zone 2		2	UDL	UDL64	36.78	121.86	85.48								
		4 Wire Unbundled Digital Loop 64 Kbps - Zone 3		3	UDL	UDL64	38.92	121.86	85.48								
		Switch-As-Is Conversion rate per UNE Loop, Single LSR, (per DS0)			UDL	URESL		24.98	3.52								
		Switch-As-Is Conversion rate per UNE Loop, Spreadsheet, (per DS0)			UDL	URESP		26.47	5.01								
		CLEC to CLEC Conversion Charge without outside dispatch			UDL	UREWO		101.97	49.67								
	2-WIRE Unbundled COPPER LOOP																
		2-Wire Unbundled Copper Loop-Designed including manual service inquiry & facility reservation - Zone 1		1	UCL	UCLPB	12.29	116.18	67.46								
		2-Wire Unbundled Copper Loop-Designed including manual service inquiry & facility reservation - Zone 2		2	UCL	UCLPB	14.09	116.18	67.46								
		2 Wire Unbundled Copper Loop-Designed including manual service inquiry & facility reservation - Zone 3		3	UCL	UCLPB	15.75	116.18	67.46								
		2-Wire Unbundled Copper Loop-Designed without manual service inquiry and facility reservation - Zone 1		1	UCL	UCLPW	12.29	91.92	55.12								
		2-Wire Unbundled Copper Loop-Designed without manual service inquiry and facility reservation - Zone 2		2	UCL	UCLPW	14.09	91.92	55.12								
		2-Wire Unbundled Copper Loop-Designed without manual service inquiry and facility reservation - Zone 3		3	UCL	UCLPW	15.75	91.92	55.12								
		Order Coordination for Unbundled Copper Loops (per loop)			UCL	UCLMC		7.92	7.92								
		CLEC to CLEC Conversion Charge without outside dispatch (UCL-Des)			UCL	UREWO		91.92	42.47								
	4-WIRE COPPER LOOP																
		4-Wire Copper Loop-Designed including manual service inquiry and facility reservation - Zone 1		1	UCL	UCL4S	22.27	139.69	90.96								

UNBUNDLED NETWORK ELEMENTS - Louisiana														Attachment 2 Exh A:			
CATEGORY		RATE ELEMENTS	Interim	Zone	BCS	USOC	RATES($)					Svc Order Submitted Elec per LSR	Svc Order Submitted Manually per LSR	Incremental Charge - Manual Svc Order vs. Electronic-1st	Incremental Charge - Manual Svc Order vs. Electronic-Add'l	Incremental Charge - Manual Svc Order vs. Electronic-Disc 1st	Incremental Charge - Manual Svc Order vs. Electronic-Disc Add'l
								Nonrecurring		Nonrecurring Disconnect		OSS Rates($)					
							Rec	First	Add'l	First	Add'l	SOMEC	SOMAN	SOMAN	SOMAN	SOMAN	SOMAN
		4-Wire Copper Loop-Designed including manual service inquiry and facility reservation - Zone 2		2	UCL	UCL4S	18.95	139.69	90.96								
		4-Wire Copper Loop-Designed including manual service inquiry and facility reservation - Zone 3		3	UCL	UCL4S	10.99	139.69	90.96								
		4-Wire Copper Loop-Designed without manual service inquiry and facility reservation - Zone 1		1	UCL	UCL4W	22.27	115.43	78.63								
		4-Wire Copper Loop-Designed without manual service inquiry and facility reservation - Zone 2		2	UCL	UCL4W	18.95	115.43	78.63								
		4-Wire Copper Loop-Designed without manual service inquiry and facility reservation - Zone 3		3	UCL	UCL4W	10.99	115.43	78.63								
		Order Coordination for Unbundled Copper Loops (per loop)			UCL	UCLMC		7.92	7.92								
		CLEC to CLEC Conversion Charge without outside dispatch (UCL-Des)			UCL	UREWO		91.92	42.47								
		Order Coordination for Specified Conversion Time (per LSR)			UEA, UDN, UAL, UHL, UDL, USL	OCOSL		17.56									
	Rearrangements																
		EEL to UNE-L Retermination, per 2 Wire Unbundled Voice Loop-SL2			UEA	UREEL		87.59	36.30								
		EEL to UNE-L Retermination, per 4 Wire Unbundled Voice Loop			UEA	UREEL		87.59	36.30								
		EEL to UNE-L Retermination, per 2 Wire ISDN Loop			UDN	UREEL		91.49	44.09								
		EEL to UNE-L Retermination, per 4 Wire Unbundled Digital Loop			UDL	UREEL		101.97	49.67								
		EEL to UNE-L Retermination, per 4 Wire Unbundled DS1 Loop			USL	UREEL		100.93	42.98								
UNE LOOP COMMINGLING																	
	2-WIRE ANALOG VOICE GRADE LOOP - COMMINGLING																
		2-Wire Analog Voice Grade Loop - Service Level 2 w/Loop or Ground Start Signaling - Zone 1		1	NTCVG	UEAL2	14.93	102.10	65.72								
		2-Wire Analog Voice Grade Loop - Service Level 2 w/Loop or Ground Start Signaling - Zone 2		2	NTCVG	UEAL2	25.35	102.10	65.72								
		2-Wire Analog Voice Grade Loop - Service Level 2 w/Loop or Ground Start Signaling - Zone 3		3	NTCVG	UEAL2	50.46	102.10	65.72								
		2-Wire Analog Voice Grade Loop - Service Level 2 w/Reverse Battery Signaling - Zone 1		1	NTCVG	UEAR2	14.93	102.10	65.72								
		2-Wire Analog Voice Grade Loop - Service Level 2 w/Reverse Battery Signaling - Zone 2		2	NTCVG	UEAR2	25.35	102.10	65.72								
		2-Wire Analog Voice Grade Loop - Service Level 2 w/Reverse Battery Signaling - Zone 3		3	NTCVG	UEAR2	50.46	102.10	65.72								
		Switch-As-Is Conversion rate per UNE Loop, Single LSR, (per DS0)			NTCVG	URESL		24.98	3.52								
		Switch-As-Is Conversion rate per UNE Loop, Spreadsheet, (per DS0)			NTCVG	URESP		26.47	5.01								
		CLEC to CLEC Conversion Charge without outside dispatch			NTCVG	UREWO		87.59	36.30								
		Loop Tagging - Service Level 2 (SL2)			NTCVG	URETL		11.20	1.10								
	4-WIRE ANALOG VOICE GRADE LOOP																
		4-Wire Analog Voice Grade Loop - Zone 1		1	NTCVG	UEAL4	30.81	127.40	91.02	0.00	0.00						
		4-Wire Analog Voice Grade Loop - Zone 2		2	NTCVG	UEAL4	38.32	127.40	91.02	0.00	0.00						
		4-Wire Analog Voice Grade Loop - Zone 3		3	NTCVG	UEAL4	60.39	127.40	91.02	0.00	0.00						
		Switch-As-Is Conversion rate per UNE Loop, Single LSR, (per DS0)			NTCVG	URESL		24.98	3.52								
		Switch-As-Is Conversion rate per UNE Loop, Spreadsheet, (per DS0)			NTCVG	URESP		26.47	5.01								
		CLEC to CLEC Conversion Charge without outside dispatch			NTCVG	UREWO		87.59	36.30								
	4-WIRE DS1 DIGITAL LOOP																
		4-Wire DS1 Digital Loop - Zone 1		1	NTCD1	USLXX	85.70	245.16	152.98								
		4-Wire DS1 Digital Loop - Zone 2		2	NTCD1	USLXX	194.96	245.16	152.98								
		4-Wire DS1 Digital Loop - Zone 3		3	NTCD1	USLXX	491.94	245.16	152.98								
		Switch-As-Is Conversion rate per UNE Loop, Single LSR, (per DS1)			NTCD1	URESL		24.98	3.52								

UNBUNDLED NETWORK ELEMENTS - Louisiana														Attachment 2 Exh A:			
CATEGORY		RATE ELEMENTS	Interim	Zone	BCS	USOC	RATES($)					Svc Order Submitted Elec per LSR	Svc Order Submitted Manually per LSR	Incremental Charge - Manual Svc Order vs. Electronic-1st	Incremental Charge - Manual Svc Order vs. Electronic-Add'l	Incremental Charge - Manual Svc Order vs. Electronic-Disc 1st	Incremental Charge - Manual Svc Order vs. Electronic-Disc Add'l
								Nonrecurring		Nonrecurring Disconnect		OSS Rates($)					
							Rec	First	Add'l	First	Add'l	SOMEC	SOMAN	SOMAN	SOMAN	SOMAN	SOMAN
		Switch-As-Is Conversion rate per UNE Loop, Spreadsheet, (per DS1)			NTCD1	URESP		26.47	5.01								
		CLEC to CLEC Conversion Charge without outside dispatch			NTCD1	UREWO		100.93	42.98								
	4-WIRE 19.2, 56 OR 64 KBPS DIGITAL GRADE LOOP																
		4 Wire Unbundled Digital Loop 2.4 Kbps - Zone 1		1	NTCUD	UDL2X	30.99	121.86	85.48								
		4 Wire Unbundled Digital Loop 2.4 Kbps - Zone 2		2	NTCUD	UDL2X	36.78	121.86	85.48								
		4 Wire Unbundled Digital Loop 2.4 Kbps - Zone3		3	NTCUD	UDL2X	38.92	121.86	85.48								
		4 Wire Unbundled Digital Loop 4.8 Kbps -Zone 1		1	NTCUD	UDL4X	30.99	121.86	85.48								
		4 Wire Unbundled Digital Loop 4.8 Kbps - Zone 2		2	NTCUD	UDL4X	36.78	121.86	85.48								
		4 Wire Unbundled Digital Loop 4.8 Kbps - Zone 3		3	NTCUD	UDL4X	38.92	121.86	85.48								
		4 Wire Unbundled Digital Loop 9.6 Kbps - Zone 1		1	NTCUD	UDL9X	30.99	121.86	85.48								
		5 Wire Unbundled Digital Loop 9.6 Kbps - Zone 2		2	NTCUD	UDL9X	36.78	121.86	85.48								
		6 Wire Unbundled Digital Loop 9.6 Kbps - Zone 3		3	NTCUD	UDL9X	38.92	121.86	85.48								
		4 Wire Unbundled Digital 19.2 Kbps - Zone 1		1	NTCUD	UDL19	30.99	121.86	85.48								
		4 Wire Unbundled Digital 19.2 Kbps - Zone 2		2	NTCUD	UDL19	36.78	121.86	85.48								
		4 Wire Unbundled Digital 19.2 Kbps - Zone 3		3	NTCUD	UDL19	38.92	121.86	85.48								
		4 Wire Unbundled Digital Loop 56 Kbps - Zone 1		1	NTCUD	UDL56	30.99	121.86	85.48								
		4 Wire Unbundled Digital Loop 56 Kbps - Zone 2		2	NTCUD	UDL56	36.78	121.86	85.48								
		4 Wire Unbundled Digital Loop 56 Kbps - Zone 3		3	NTCUD	UDL56	38.92	121.86	85.48								
		4 Wire Unbundled Digital Loop 64 Kbps - Zone 1		1	NTCUD	UDL64	30.99	121.86	85.48								
		4 Wire Unbundled Digital Loop 64 Kbps - Zone 2		2	NTCUD	UDL64	36.78	121.86	85.48								
		4 Wire Unbundled Digital Loop 64 Kbps - Zone 3		3	NTCUD	UDL64	38.92	121.86	85.48								
		Switch-As-Is Conversion rate per UNE Loop, Single LSR, (per DS0)			NTCUD	URESL		24.98	3.52								
		Switch-As-Is Conversion rate per UNE Loop, Spreadsheet, (per DS0)			NTCUD	URESP		26.47	5.01								
		CLEC to CLEC Conversion Charge without outside dispatch			NTCUD	UREWO		101.97	49.67								
		Order Coordination for Specified Conversion Time (per LSR)			NTCVG, NTCUD, NTCD1	OCOSL		17.56									
UNBUNDLED EXCHANGE ACCESS LOOP																	
	2-WIRE ANALOG VOICE GRADE LOOP																
		2-Wire Analog Voice Grade Loop - Service Level 1- Zone 1		1	UEANL	UEAL2	12.90	36.54	16.87								
		2-Wire Analog Voice Grade Loop - Service Level 1- Zone 2		2	UEANL	UEAL2	23.33	36.54	16.87								
		2-Wire Analog Voice Grade Loop - Service Level 1- Zone 3		3	UEANL	UEAL2	48.43	36.54	16.87								
		2-Wire Analog Voice Grade Loop - Service Level 1- Zone 1		1	UEANL	UEASL	12.90	36.54	16.87								
		2-Wire Analog Voice Grade Loop - Service Level 1- Zone 2		2	UEANL	UEASL	23.33	36.54	16.87								
		2-Wire Analog Voice Grade Loop - Service Level 1- Zone 3		3	UEANL	UEASL	48.43	36.54	16.87								
		Tag Loop at End User Premise			UEANL	URETL		8.92	0.88								
		Loop Testing - Basic 1st Half Hour			UEANL	URET1		33.17	0.00								
		Loop Testing - Basic Additional Half Hour			UEANL	URETA		19.28	19.28								
		Manual Order Coordination for UVL-SL1s (per loop)			UEANL	UEAMC		7.92	7.92								
		Order Coordination for Specified Conversion Time for UVL-SL1 (per LSR)			UEANL	OCOSL		17.56	17.56								
		Unbundled Non-Design Voice Loop, billing for BST providing make-up (Engineering Information - E.I.)			UEANL	UEANM		13.04	13.04								
		CLEC to CLEC Conversion Charge Without Outside Dispatch (UVL-SL1)			UEANL	UREWO		15.75	8.93								
	2-WIRE Unbundled COPPER LOOP																
		2-Wire Unbundled Copper Loop - Non-Designed Zone 1	I	1	UEQ	UEQ2X	12.40	35.27	15.60								
		2 Wire Unbundled Copper Loop - Non-Designed - Zone 2	I	2	UEQ	UEQ2X	14.32	35.27	15.60								
		2 Wire Unbundled Copper Loop - Non-Designed - Zone 3	I	3	UEQ	UEQ2X	16.87	35.27	15.60								
		Unbundled Miscellaneous Rate Element, Tag Loop at End User Premise			UEQ	URETL		8.92	0.88								
		Loop Testing - Basic 1st Half Hour			UEQ	URET1		33.17	0.00								
		Loop Testing - Basic Additional Half Hour			UEQ	URETA		19.28	19.28								
		Manual Order Coordination 2 Wire Unbundled Copper Loop - Non-Designed (per loop)			UEQ	USBMC		7.92	7.92								
		Unbundled Copper Loop - Non-Design, billing for BST providing make-up (Engineering Information - E.I.)			UEQ	UEQMU		13.04	13.04								

UNBUNDLED NETWORK ELEMENTS - Louisiana														Attachment 2 Exh A:			
CATEGORY		RATE ELEMENTS	Interim	Zone	BCS	USOC	RATES($)					Svc Order Submitted Elec per LSR	Svc Order Submitted Manually per LSR	Incremental Charge - Manual Svc Order vs. Electronic-1st	Incremental Charge - Manual Svc Order vs. Electronic-Add'l	Incremental Charge - Manual Svc Order vs. Electronic-Disc 1st	Incremental Charge - Manual Svc Order vs. Electronic-Disc Add'l
								Nonrecurring		Nonrecurring Disconnect		OSS Rates($)					
							Rec	First	Add'l	First	Add'l	SOMEC	SOMAN	SOMAN	SOMAN	SOMAN	SOMAN
		CLEC to CLEC Conversion Charge Without Outside Dispatch (UCL-ND)			UEQ	UREWO		14.25	7.42								
LOOP MODIFICATION																	
		Unbundled Loop Modification, Removal of Load Coils - 2 Wire pair less than or equal to 18k ft, per Unbundled Loop			UAL, UHL, UCL, UEQ, ULS, UEA, UEANL, UEPSR, UEPSB	ULM2L		0.00	0.00								
		Unbundled Loop Modification Removal of Load Coils - 4 Wire less than or equal to 18K ft, per Unbundled Loop			UHL, UCL, UEA	ULM4L		0.00	0.00								
		Unbundled Loop Modification Removal of Bridged Tap Removal, per unbundled loop			UAL, UHL, UCL, UEQ, ULS, UEA, UEANL, UEPSR, UEPSB	ULMBT		12.15	12.15								
SUB-LOOPS																	
	Sub-Loop Distribution																
		Sub-Loop - Per Cross Box Location - CLEC Feeder Facility Set-Up			UEANL, UEF	USBSA		144.09	144.09								
		Sub-Loop - Per Cross Box Location - Per 25 Pair Panel Set-Up			UEANL, UEF	USBSB		10.99	10.99								
		Sub-Loop - Per Building Equipment Room - CLEC Feeder Facility Set-Up			UEANL	USBSC		86.16	86.16								
		Sub-Loop - Per Building Equipment Room - Per 25 Pair Panel Set-Up			UEANL	USBSD		27.13	27.13								
		Sub-Loop Distribution Per 2-Wire Analog Voice Grade Loop - Zone 1		1	UEANL	USBN2	7.57	63.89	30.06								
		Sub-Loop Distribution Per 2-Wire Analog Voice Grade Loop - Zone 2		2	UEANL	USBN2	12.75	63.89	30.06								
		Sub-Loop Distribution Per 2-Wire Analog Voice Grade Loop - Zone 3		3	UEANL	USBN2	21.45	63.89	30.06								
		Order Coordination for Unbundled Sub-Loops, per sub-loop pair			UEANL	USBMC		7.92	7.92								
		Sub-Loop Distribution Per 4-Wire Analog Voice Grade Loop - Zone 1		1	UEANL	USBN4	11.76	76.75	42.92								
		Sub-Loop Distribution Per 4-Wire Analog Voice Grade Loop - Zone 2		2	UEANL	USBN4	16.84	76.75	42.92								
		Sub-Loop Distribution Per 4-Wire Analog Voice Grade Loop - Zone 3		3	UEANL	USBN4	19.27	76.75	42.92								
		Order Coordination for Unbundled Sub-Loops, per sub-loop pair			UEANL	USBMC		7.92	7.92								
		Sub-Loop 2-Wire Intrabuilding Network Cable (INC)			UEANL	USBR2	2.91	51.48	17.65								
		Order Coordination for Unbundled Sub-Loops, per sub-loop pair			UEANL	USBMC		7.92	7.92								
		Sub-Loop 4-Wire Intrabuilding Network Cable (INC)			UEANL	USBR4	6.58	57.54	23.71								
		Order Coordination for Unbundled Sub-Loops, per sub-loop pair			UEANL	USBMC		7.92	7.92								
		Loop Testing - Basic 1st Half Hour			UEANL	URET1		33.17	0.00								
		Loop Testing - Basic Additional Half Hour			UEANL	URETA		19.28	19.28								
		2 Wire Copper Unbundled Sub-Loop Distribution - Zone 1		1	UEF	UCS2X	6.26	63.89	30.06								
		2 Wire Copper Unbundled Sub-Loop Distribution - Zone 2		2	UEF	UCS2X	10.07	63.89	30.06								
		2 Wire Copper Unbundled Sub-Loop Distribution - Zone 3		3	UEF	UCS2X	12.70	63.89	30.06								
		Order Coordination for Unbundled Sub-Loops, per sub-loop pair			UEF	USBMC		7.92	7.92								
		4 Wire Copper Unbundled Sub-Loop Distribution - Zone 1		1	UEF	UCS4X	8.03	76.75	42.92								
		4 Wire Copper Unbundled Sub-Loop Distribution - Zone 2		2	UEF	UCS4X	10.71	76.75	42.92								
		4 Wire Copper Unbundled Sub-Loop Distribution - Zone 3		3	UEF	UCS4X	6.08	76.75	42.92								
		Order Coordination for Unbundled Sub-Loops, per sub-loop pair			UEF	USBMC		7.92	7.92								
		Loop Tagging Service Level 1, Unbundled Copper Loop, Non-Designed and Distribution Subloops			UEF, UEANL	URETL		8.92	0.88								

UNBUNDLED NETWORK ELEMENTS - Louisiana														Attachment 2 Exh A:			
CATEGORY	RATE ELEMENTS	Interim	Zone	BCS	USOC	RATES($)					Svc Order Submitted Elec per LSR	Svc Order Submitted Manually per LSR	Incremental Charge - Manual Svc Order vs. Electronic-1st	Incremental Charge - Manual Svc Order vs. Electronic-Add'l	Incremental Charge - Manual Svc Order vs. Electronic-Disc 1st	Incremental Charge - Manual Svc Order vs. Electronic-Disc Add'l
							Nonrecurring		Nonrecurring Disconnect		OSS Rates($)					
						Rec	First	Add'l	First	Add'l	SOMEC	SOMAN	SOMAN	SOMAN	SOMAN	SOMAN
	Loop Testing - Basic 1st Half Hour			UEF	URET1		33.17	0.00								
	Loop Testing - Basic Additional Half Hour			UEF	URETA		19.28	19.28								
Unbundled Sub-Loop Modification																
	Unbundled Sub-Loop Modification - 2-W Copper Dist Load Coil/Equip Removal per 2-W PR			UEF	ULM2X		0.00	0.00								
	Unbundled Sub-loop Modification - 4-W Copper Dist Load Coil/Equip Removal per 4-W PR			UEF	ULM4X		0.00	0.00								
	Unbundled Loop Modification, Removal of Bridge Tap, per unbundled loop			UEF	ULMBT		224.55	4.29								
Unbundled Network Terminating Wire (UNTW)																
	Unbundled Network Terminating Wire (UNTW) per Pair			UENTW	UENPP	0.3454	14.72	14.72								
Network Interface Device (NID)																
	Network Interface Device (NID) - 1-2 lines			UENTW	UND12		42.26	27.83								
	Network Interface Device (NID) - 1-6 lines			UENTW	UND16		62.86	48.43								
	Network Interface Device Cross Connect - 2 W			UENTW	UNDC2		5.73	5.73								
	Network Interface Device Cross Connect - 4W			UENTW	UNDC4		5.73	5.73								
UNE OTHER, PROVISIONING ONLY - NO RATE																
	Unbundled Contact Name, Provisioning Only - no rate			UAL, UCL, UDC, UDL, UDN, UEA, UHL, UEANL, UEF, UEQ, UENTW, NTCVG, NTCUD, NTCD1, USL	UNECN	0.00	0.00									
	Unbundled DS1 Loop - Superframe Format Option - no rate			USL, NTCD1	CCOSF	0.00	0.00									
	Unbundled DS1 Loop - Expanded Superframe Format option - no rate			USL, NTCD1	CCOEF	0.00	0.00									
	NID - Dispatch and Service Order for NID installation			UENTW	UNDBX	0.00	0.00									
	UNTW Circuit Establishment, Provisioning Only - No Rate			UENTW	UENCE	0.00	0.00									
LOOP MAKE-UP																
	Loop Makeup - Preordering Without Reservation, per working or spare facility queried (Manual).			UMK	UMKLW		23.29	23.29								
	Loop Makeup - Preordering With Reservation, per spare facility queried (Manual).			UMK	UMKLP		24.70	24.70								
	Loop Makeup--With or Without Reservation, per working or spare facility queried (Mechanized)			UMK	UMKMQ		0.19	0.19								
LINE SPLITTING																
END USER ORDERING-CENTRAL OFFICE BASED																
	Line Splitting - per line activation DLEC owned splitter			UEPSR UEPSB	UREOS	0.61										
	Line Splitting - per line activation BST owned - physical			UEPSR UEPSB	UREBP	0.61	17.97	10.29								
	Line Splitting - per line activation BST owned - virtual			UEPSR UEPSB	UREBV	0.61	17.97	10.29								
UNBUNDLED EXCHANGE ACCESS LOOP																
2-WIRE ANALOG VOICE GRADE LOOP																
	2 Wire Analog Voice Grade Loop-Service Level 1-Line Splitting-Zone 1		1	UEPSR UEPSB	UEALS	12.90	36.54	16.87	0.00	0.00						
	2 Wire Analog Voice Grade Loop-Service Level 1-Line Splitting-Zone 1		1	UEPSR UEPSB	UEABS	12.90	36.54	16.87	0.00	0.00						
	2 Wire Analog Voice Grade Loop- Service Level 1-Line Splitting-Zone 2		2	UEPSR UEPSB	UEALS	23.33	36.54	16.87	0.00	0.00						
	2 Wire Analog Voice Grade Loop- Service Level 1-Line Splitting-Zone 2		2	UEPSR UEPSB	UEABS	23.33	36.54	16.87	0.00	0.00						
	2 Wire Analog Voice Grade Loop-Service Level 1-Line Splitting-Zone 3		3	UEPSR UEPSB	UEALS	48.43	36.54	16.87	0.00	0.00						
	2 Wire Analog Voice Grade Loop-Service Level 1-Line Splitting-Zone 3		3	UEPSR UEPSB	UEABS	48.43	36.54	16.87	0.00	0.00						
PHYSICAL COLLOCATION																
	Physical Collocation-2 Wire Cross Connects (Loop) for Line Splitting			UEPSR UEPSB	PE1LS	0.0318	11.94	11.46	0.00	0.00						
VIRTUAL COLLOCATION																

UNBUNDLED NETWORK ELEMENTS - Louisiana														Attachment 2 Exh A:			
CATEGORY		RATE ELEMENTS	Interim	Zone	BCS	USOC	RATES($)					Svc Order Submitted Elec per LSR	Svc Order Submitted Manually per LSR	Incremental Charge - Manual Svc Order vs. Electronic-1st	Incremental Charge - Manual Svc Order vs. Electronic-Add'l	Incremental Charge - Manual Svc Order vs. Electronic-Disc 1st	Incremental Charge - Manual Svc Order vs. Electronic-Disc Add'l
								Nonrecurring		Nonrecurring Disconnect		OSS Rates($)					
							Rec	First	Add'l	First	Add'l	SOMEC	SOMAN	SOMAN	SOMAN	SOMAN	SOMAN
		Virtual Collocation-2 Wire Cross Connects (Loop) for Line Splitting			UEPSR UEPSB	VE1LS	0.0296	11.94	11.46	0.00	0.00						
MAINTENANCE OF SERVICE																	
	NOTE: The Expedite charge will be maintained commensurate with BellSouth's FCC No.1 Tariff, Section 13.3.1 as applicable.																
		No Trouble Found - per 1/2 hour increments - Basic						80.00	55.00								
		No Trouble Found - per 1/2 hour increments - Overtime						90.00	65.00								
		No Trouble Found - per 1/2 hour increments - Premium						100.00	75.00								
UNBUNDLED DEDICATED TRANSPORT																	
	INTEROFFICE CHANNEL - DEDICATED TRANSPORT																
		Interoffice Channel - 2-Wire Voice Grade - per mile			U1TVX	1L5XX	0.013										
		Interoffice Channel - 2-Wire Voice Grade - Facility Termination			U1TVX	U1TV2	22.60	39.36	26.62								
		Interoffice Channel - 2-Wire Voice Grade Rev Bat. - per mile			U1TVX	1L5XX	0.013										
		Interoffice Channel - 2-Wire VG Rev Bat. - Facility Termination			U1TVX	U1TR2	22.60	39.36	26.62								
		Interoffice Channel - 4-Wire Voice Grade - per mile			U1TVX	1L5XX	0.013										
		Interoffice Channel - 4- Wire Voice Grade - Facility Termination			U1TVX	U1TV4	19.81	39.36	26.62								
		Interoffice Channel - 56 kbps - per mile			U1TDX	1L5XX	0.013										
		Interoffice Channel - 56 kbps - Facility Termination			U1TDX	U1TD5	15.61	39.36	26.62								
		Interoffice Channel - 64 kbps - per mile			U1TDX	1L5XX	0.013										
		Interoffice Channel - 64 kbps - Facility Termination			U1TDX	U1TD6	15.61	39.36	26.62								
		Interoffice Channel - DS1 - per mile			U1TD1	1L5XX	0.2652										
		Interoffice Channel - DS1 - Facility Termination			U1TD1	U1TF1	70.47	86.69	79.44								
		Interoffice Channel - DS3 - per mile			U1TD3	1L5XX	6.04										
		Interoffice Channel - DS3 - Facility Termination			U1TD3	U1TF3	850.45	270.69	158.05								
		Interoffice Channel - STS-1 - per mile			U1TS1	1L5XX	6.04										
		Interoffice Channel - STS-1 - Facility Termination			U1TS1	U1TFS	830.19	270.69	158.05								
	UNBUNDLED DARK FIBER																
		Dark Fiber - Interoffice Transport, Per Four Fiber Strands, Per Route Mile Or Fraction Thereof			UDF, UDFCX	1L5DF	25.28										
		Dark Fiber - Interoffice Transport, Per Four Fiber Strands, Per Route Mile Or Fraction Thereof			UDF, UDFCX	UDF14		620.60	133.88								
HIGH CAPACITY UNBUNDLED LOCAL LOOP																	
	DS-3/STS-1 UNBUNDLED LOCAL LOOP - Stand Alone																
		DS3 Unbundled Local Loop - per mile			UE3	1L5ND	10.04										
		DS3 Unbundled Local Loop - Facility Termination			UE3	UE3PX	362.34	438.46	256.30								
		STS-1Unbundled Local Loop - per mile			UDLSX	1L5ND	10.04										
		STS-1 Unbundled Local Loop - Facility Termination			UDLSX	UDLS1	374.56	438.46	256.30								
ENHANCED EXTENDED LINK (EELs)																	
	Network Elements Used in Combinations																
		2-Wire VG Loop (SL2) in Combination - Zone 1		1	UNCVX	UEAL2	14.93	94.21	45.09								
		2-Wire VG Loop (SL2) in Combination - Zone 2		2	UNCVX	UEAL2	25.35	94.21	45.09								
		2-Wire VG Loop (SL2) in Combination - Zone 3		3	UNCVX	UEAL2	50.46	94.21	45.09								
		4-Wire Analog Voice Grade Loop in Combination - Zone 1		1	UNCVX	UEAL4	30.81	94.21	45.09								
		4-Wire Analog Voice Grade Loop in Combination - Zone 2		2	UNCVX	UEAL4	38.32	94.21	45.09								
		4-Wire Analog Voice Grade Loop in Combination - Zone 3		3	UNCVX	UEAL4	60.39	94.21	45.09								
		2-Wire ISDN Loop in Combination - Zone 1		1	UNCNX	U1L2X	22.09	94.21	45.09								
		2-Wire ISDN Loop in Combination - Zone 2		2	UNCNX	U1L2X	35.28	94.21	45.09								
		2-Wire ISDN Loop in Combination - Zone 3		3	UNCNX	U1L2X	65.18	94.21	45.09								
		4-Wire 56Kbps Digital Grade Loop in Combination - Zone 1		1	UNCDX	UDL56	30.99	94.21	45.09								
		4-Wire 56Kbps Digital Grade Loop in Combination - Zone 2		2	UNCDX	UDL56	36.78	94.21	45.09								
		4-Wire 56Kbps Digital Grade Loop in Combination - Zone 3		3	UNCDX	UDL56	38.92	94.21	45.09								
		4-Wire 64Kbps Digital Grade Loop in Combination - Zone 1		1	UNCDX	UDL64	30.99	94.21	45.09								
		4-Wire 64Kbps Digital Grade Loop in Combination - Zone 2		2	UNCDX	UDL64	36.78	94.21	45.09								
		4-Wire 64Kbps Digital Grade Loop in Combination - Zone 3		3	UNCDX	UDL64	38.92	94.21	45.09								
		4-Wire DS1 Digital Loop in Combination - Zone 1		1	UNC1X	USLXX	85.70	169.22	100.89								
		4-Wire DS1 Digital Loop in Combination - Zone 2		2	UNC1X	USLXX	194.96	169.22	100.89								
		4-Wire DS1 Digital Loop in Combination - Zone 3		3	UNC1X	USLXX	491.94	169.22	100.89								
		DS3 Local Loop in combination - per mile			UNC3X	1L5ND	10.04										

UNBUNDLED NETWORK ELEMENTS - Louisiana														Attachment 2 Exh A:			
CATEGORY		RATE ELEMENTS	Interim	Zone	BCS	USOC	RATES($)					Svc Order Submitted Elec per LSR	Svc Order Submitted Manually per LSR	Incremental Charge - Manual Svc Order vs. Electronic-1st	Incremental Charge - Manual Svc Order vs. Electronic-Add'l	Incremental Charge - Manual Svc Order vs. Electronic-Disc 1st	Incremental Charge - Manual Svc Order vs. Electronic-Disc Add'l
								Nonrecurring		Nonrecurring Disconnect		OSS Rates($)					
							Rec	First	Add'l	First	Add'l	SOMEC	SOMAN	SOMAN	SOMAN	SOMAN	SOMAN
		DS3 Local Loop in combination - Facility Termination			UNC3X	UE3PX	362.34	188.45	125.51								
		STS-1 Local Loop in combination - per mile			UNCSX	1L5ND	10.04										
		STS-1 Local Loop in combination - Facility Termination			UNCSX	UDLS1	374.56	188.45	125.51								
		Interoffice Channel in combination - 2-wire VG - per mile			UNCVX	1L5XX	0.013										
		Interoffice Channel in combination - 2-wire VG - Facility Termination			UNCVX	U1TV2	22.60	72.60	41.75								
		Interoffice Channel in combination - 4-wire VG - per mile			UNCVX	1L5XX	0.013										
		Interoffice Channel in combination - 4-wire VG - Facility Termination			UNCVX	U1TV4	19.81	72.60	41.75								
		Interoffice Channel in combination - 4-wire 56 kbps - per mile			UNCDX	1L5XX	0.013										
		Interoffice Channel in combination - 4-wire 56 kbps - Facility Termination			UNCDX	U1TD5	15.61	72.60	41.75								
		Interoffice Channel in combination - 4-wire 64 kbps - per mile			UNCDX	1L5XX	0.013										
		Interoffice Channel in combination - 4-wire 64 kbps - Facility Termination			UNCDX	U1TD6	15.61	72.60	41.75								
		Interoffice Channel in combination - DS1 - per mile			UNC1X	1L5XX	0.2652										
		Interoffice Channel in combination - DS1 Facility Termination			UNC1X	U1TF1	70.47	143.58	103.88								
		Interoffice Channel in combination - DS3 - per mile			UNC3X	1L5XX	6.04										
		Interoffice Channel in combination - DS3 - Facility Termination			UNC3X	U1TF3	850.45	296.68	121.16								
		Interoffice Channel in combination - STS-1 - per mile			UNCSX	1L5XX	6.04										
		Interoffice Channel in combination - STS-1 Facility Termination			UNCSX	U1TFS	830.19	296.68	121.16								
ADDITIONAL NETWORK ELEMENTS																	
	Optional Features & Functions:																
		Clear Channel Capability Extended Frame Option - per DS1	I		U1TD1, ULDD1,UNC1X	CCOEF		0.00	0.00	0.00	0.00						
		Clear Channel Capability Super FrameOption - per DS1	I		U1TD1, ULDD1,UNC1X	CCOSF		0.00	0.00	0.00	0.00						
		Clear Channel Capability (SF/ESF) Option - Subsequent Activity - per DS1	I		ULDD1, U1TD1, UNC1X, USL	NRCCC		184.65	23.79	1.97	0.77						
		C-bit Parity Option - Subsequent Activity - per DS3	i		U1TD3, ULDD3, UE3, UNC3X	NRCC3		218.78	7.66	0.7263	0.00						
		DS1/DS0 Channel System			UNC1X	MQ1	105.09	59.97	12.96								
		DS3/DS1Channel System			UNC3X, UNCSX	MQ3	201.48	107.05	48.07								
		Voice Grade COCI in combination			UNCVX	1D1VG	0.6497	5.91	4.26								
		Voice Grade COCI - for Stand Alone Local Loop			UEA	1D1VG	0.6497	5.91	4.26								
		Voice Grade COCI - for connection to a channelized DS1 Local Channel in the same SWC as collocation			U1TUC	1D1VG	0.6497	5.91	4.26								
		OCU-DP COCI (2.4-64kbs) in combination			UNCDX	1D1DD	1.38	5.91	4.26								
		OCU-DP COCI (2.4-64kbs) - for Stand Alone Local Loop			UDL	1D1DD	1.38	5.91	4.26								
		OCU-DP COCI (2.4-64kbs) - for connection to a channelized DS1 Local Channel in the same SWC as collocation			U1TUD	1D1DD	1.38	5.91	4.26								
		2-wire ISDN COCI (BRITE) in combination			UNCNX	UC1CA	2.96	6.39	4.58								
		2-wire ISDN COCI (BRITE) - for a Local Loop			UDN	UC1CA	2.96	6.39	4.58								
		2-wire ISDN COCI (BRITE) - for connection to a channelized DS1 Local Channel in the same SWC as collocation			U1TUB	UC1CA	2.96	6.39	4.58								
		DS1 COCI in combination			UNC1X	UC1D1	11.78	5.91	4.26								
		DS1 COCI - for Stand Alone Local Channel			ULDD1	UC1D1	11.78	5.91	4.26								
		DS1 COCI - for Stand Alone Interoffice Channel			U1TD1	UC1D1	11.78	5.91	4.26								
		DS1 COCI - for Stand Alone Local Loop			USL	UC1D1	11.78	5.91	4.26								
		DS1 COCI - for connection to a channelized DS1 Local Channel in the same SWC as collocation			U1TUA	UC1D1	11.78	5.91	4.26								
		Wholesale to UNE, Switch-As-Is Conversion Charge			UNCVX, U1TVX, UNCDX, U1TDX, UNC1X, U1TD1,UNC3X, U1TD3, UNCSX, U1TS1, UDF,UDFCX	UNCCC		5.43	5.43								

UNBUNDLED NETWORK ELEMENTS - Louisiana														Attachment 2 Exh A:			
CATEGORY		RATE ELEMENTS	Interim	Zone	BCS	USOC	RATES($)					Svc Order Submitted Elec per LSR	Svc Order Submitted Manually per LSR	Incremental Charge - Manual Svc Order vs. Electronic-1st	Incremental Charge - Manual Svc Order vs. Electronic-Add'l	Incremental Charge - Manual Svc Order vs. Electronic-Disc 1st	Incremental Charge - Manual Svc Order vs. Electronic-Disc Add'l
								Nonrecurring		Nonrecurring Disconnect		OSS Rates($)					
							Rec	First	Add'l	First	Add'l	SOMEC	SOMAN	SOMAN	SOMAN	SOMAN	SOMAN
		Unbundled Misc Rate Element, SNE SAI, Single Network Element - Switch As Is Non-recurring Charge, per circuit (LSR)	I		U1TVX, U1TDX, U1TD1, U1TD3, U1TS1, UDF, UE3	URESL		36.83	16.12								
		Unbundled Misc Rate Element, SNE SAI, Single Network Element - Switch As Is Non-recurring Charge, incremental charge per circuit on a spreadsheet	i		U1TVX, U1TDX, U1TD1, U1TD3, U1TS1, UDF, UE3	URESP		1.49	1.49								
		UNE Reconfiguration Change Charge per Circuit	I		UNC1X	URERC		35.00	35.00								
		UNE Reconfiguration Change Charge per Circuit Project Managed	I		UNC1X	URERP		1.49	1.49								
	Access to DCS - Customer Reconfiguration (FlexServ)																
		Customer Reconfiguration Establishment						1.43									
		DS1 DCS Termination with DS0 Switching					19.58	24.81	19.09								
		DS1 DCS Termination with DS1 Switching					10.95	17.93	12.22								
		DS3 DCS Termination with DS1 Switching					149.41	24.81	19.09								
	Node (SynchroNet)																
		Node per month			UNCDX	UNCNT	15.43										
	Service Rearrangements																
		NRC - Change in Facility Assignment per circuit Service Rearrangement	I		U1TVX, U1TDX, UEA, UDL, U1TUC, U1TUD, U1TUB, ULDVX, ULDDX, UNCVX, UNCDX, UNC1X	URETD		100.93	42.98								
		NRC - Change in Facility Assignment per circuit Project Management (added to CFA per circuit if project managed)	I		U1TVX, U1TDX, UEA, UDL, U1TUC, U1TUD, U1TUB, ULDVX, ULDDX, UNCVX, UNCDX, UNC1X	URETB		1.28	1.28								
		NRC - Order Coordination Specific Time - Dedicated Transport	I		UNC1X	OCOSR		18.85	18.85								
COMMINGLING																	
		Commingling Authorization			UNCVX, UNCDX, UNC1X, UNC3X, UNCSX, U1TD1, U1TD3, U1TS1, UE3, UDLSX, U1TVX, U1TDX, U1TUB, ULDVX, ULDD1, ULDD3, ULDS1	CMGAU	0.00	0.00	0.00								
	Commingled (UNE part of single bandwidth circuit)																
		Commingled VG COCI			XDV2X, NTCVG	1D1VG	0.6497	5.91	4.26								
		Commingled Digital COCI			XDV6X, NTCUD	1D1DD	1.38	5.91	4.26								
		Commingled ISDN COCI			XDD4X	UC1CA	2.96	6.39	4.58								
		Commingled 2-wire VG Interoffice Channel			XDV2X	U1TV2	22.60	72.60	41.75								
		Commingled 4-wire VG Interoffice Channel			XDV6X	U1TV4	19.81	72.60	41.75								
		Commingled 56kbps Interoffice Channel			XDD4X	U1TD5	15.61	72.60	41.75								
		Commingled 64kbps Interoffice Channel			XDD4X	U1TD6	15.61	72.60	41.75								
		Commingled VG/DS0 Interoffice Channel Mileage			XDV2X, XDV6X, XDD4X	1L5XX	0.013										
		Commingled 2-wire Local Loop Zone 1		1	XDV2X	UEAL2	14.93	94.21	45.09								
		Commingled 2-wire Local Loop Zone 2		2	XDV2X	UEAL2	25.35	94.21	45.09								
		Commingled 2-wire Local Loop Zone 3		3	XDV2X	UEAL2	50.46	94.21	45.09								
		Commingled 4-wire Local Loop Zone 1		1	XDV6X	UEAL4	30.81	94.21	45.09								
		Commingled 4-wire Local Loop Zone 2		2	XDV6X	UEAL4	38.32	94.21	45.09								
		Commingled 4-wire Local Loop Zone 3		3	XDV6X	UEAL4	60.39	94.21	45.09								
		Commingled 56kbps Local Loop Zone 1		1	XDD4X	UDL56	30.99	94.21	45.09								
		Commingled 56kbps Local Loop Zone 2		2	XDD4X	UDL56	36.78	94.21	45.09								
		Commingled 56kbps Local Loop Zone 3		3	XDD4X	UDL56	38.92	94.21	45.09								

UNBUNDLED NETWORK ELEMENTS - Louisiana													Attachment 2 Exh A:			
CATEGORY	RATE ELEMENTS	Interim	Zone	BCS	USOC	RATES($)					Svc Order Submitted Elec per LSR	Svc Order Submitted Manually per LSR	Incremental Charge - Manual Svc Order vs. Electronic-1st	Incremental Charge - Manual Svc Order vs. Electronic-Add'l	Incremental Charge - Manual Svc Order vs. Electronic-Disc 1st	Incremental Charge - Manual Svc Order vs. Electronic-Disc Add'l
							Nonrecurring		Nonrecurring Disconnect		OSS Rates($)					
						Rec	First	Add'l	First	Add'l	SOMEC	SOMAN	SOMAN	SOMAN	SOMAN	SOMAN
	Commingled 64kbps Local Loop Zone 1		1	XDD4X	UDL64	30.99	94.21	45.09								
	Commingled 64kbps Local Loop Zone 2		2	XDD4X	UDL64	36.78	94.21	45.09								
	Commingled 64kbps Local Loop Zone 3		3	XDD4X	UDL64	38.92	94.21	45.09								
	Commingled ISDN Local Loop Zone 1		1	XDD4X	U1L2X	22.09	94.21	45.09								
	Commingled ISDN Local Loop Zone 2		2	XDD4X	U1L2X	35.28	94.21	45.09								
	Commingled ISDN Local Loop Zone 3		3	XDD4X	U1L2X	65.18	94.21	45.09								
	Commingled DS1 COCI			XDH1X, NTCD1	UC1D1	11.78	5.91	4.26								
	Commingled DS1 Interoffice Channel			XDH1X	U1TF1	70.47	143.58	103.88								
	Commingled DS1 Interoffice Channel Mileage			XDH1X	1L5XX	0.2652										
	Commingled DS1/DS0 Channel System			XDH1X	MQ1	105.09	59.97	12.96								
	Commingled DS1 Local Loop Zone 1		1	XDH1X	USLXX	85.70	169.22	100.89								
	Commingled DS1 Local Loop Zone 2		2	XDH1X	USLXX	194.96	169.22	100.89								
	Commingled DS1 Local Loop Zone 3		3	XDH1X	USLXX	491.94	169.22	100.89								
	Commingled DS3 Local Loop			HFQC6	UE3PX	362.34	188.45	125.51								
	Commingled DS3/STS-1 Local Loop Mileage			HFQC6, HFRST	1L5ND	10.04										
	Commingled STS-1 Local Loop			HFRST	UDLS1	374.56	188.45	125.51								
	Commingled DS3/DS1 Channel System			HFQC6	MQ3	201.48	107.05	48.07								
	Commingled DS3 Interoffice Channel			HFQC6	U1TF3	850.45	296.68	121.16								
	Commingled DS3 Interoffice Channel Mileage			HFQC6	1L5XX	6.04										
	Commingled STS-1Interoffice Channel			HFRST	U1TFS	830.19	296.68	121.16								
	Commingled STS-1Interoffice Channel Mileage			HFRST	1L5XX	6.04										
	Commingled Dark Fiber - Interoffice Transport, Per Four Fiber Strands, Per Route Mile Or Fraction Thereof			HEQDL	1L5DF	25.28										
	Commingled Dark Fiber - Interoffice Transport, Per Four Fiber Strands, Per Route Mile Or Fraction Thereof			HEQDL	UDF14		620.60	133.88								
SIGNALING (CCS7)																
	NOTE:"bk" beside a rate indicates that the parties have agreed to bill and keep for that element pursuant to the terms and conditions in Attachment 3.															
	CCS7 Signaling Usage, Per TCAP Message					0.000064bk										
	CCS7 Signaling Usage, Per ISUP Message					0.000016bk										
LNP Query Service																
	LNP Charge Per query					0.0008559										
	LNP Service Establishment Manual						12.16									
	LNP Service Provisioning with Point Code Establishment						576.33	294.43								
911 PBX LOCATE																
	911 PBX LOCATE DATABASE CAPABILITY															
	Service Establishment per CLEC per End User Account			9PBDC	9PBEU		1,819.00									
	Changes to TN Range or Customer Profile			9PBDC	9PBTN		181.99									
	Per Telephone Number (Monthly)			9PBDC	9PBMM	0.07										
	Change Company (Service Provider) ID			9PBDC	9PBPC		534.22									
	PBX Locate Service Support per CLEC (Monthlt)			9PBDC	9PBMR	178.58										
	Service Order Charge			9PBDC	9PBSC		15.20									
	911 PBX LOCATE TRANSPORT COMPONENT															
	See Att 3															
	Note: Rates displaying an "I" in Interim column are interim as a result of a Commission order.															

UNBUNDLED NETWORK ELEMENTS - Mississippi														Attachment 2 Exh A:			
CATEGORY	RATE ELEMENTS	Interim	Zone	BCS	USOC	RATES($)					Svc Order Submitted Elec per LSR	Svc Order Submitted Manually per LSR	Incremental Charge - Manual Svc Order vs. Electronic-1st	Incremental Charge - Manual Svc Order vs. Electronic-Add'l	Incremental Charge - Manual Svc Order vs. Electronic-Disc 1st	Incremental Charge - Manual Svc Order vs. Electronic-Disc Add'l
							Nonrecurring		Nonrecurring Disconnect		OSS Rates($)					
						Rec	First	Add'l	First	Add'l	SOMEC	SOMAN	SOMAN	SOMAN	SOMAN	SOMAN
	The "Zone" shown in the sections for stand-alone loops or loops as part of a combination refers to Geographically Deaveraged UNE Zones. To view Geographically Deaveraged UNE Zone Designations by Central Office, refer to internet Website: http://www.interconnection.bellsouth.com/become_a_clec/html/interconnection.htm															
OPERATIONS SUPPORT SYSTEMS (OSS) - "REGIONAL RATES"																
	NOTE: (1) CLEC should contact its contract negotiator if it prefers the "state specific" OSS charges as ordered by the State Commissions. The OSS charges currently contained in this rate exhibit are the BellSouth "regional" service ordering charges. CLEC may elect either the state specific Commission ordered rates for the service ordering charges, or CLEC may elect the regional service ordering charge, however, CLEC can not obtain a mixture of the two regardless if CLEC has a interconnection contract established in															
	NOTE: (2) Any element that can be ordered electronically will be billed according to the SOMEC rate listed in this category. Please refer to BellSouth's Local Ordering Handbook (LOH) to determine if a product can be ordered electronically. For those elements that cannot be ordered electronically at present per the LOH, the listed SOMEC rate in this category reflects the charge that would be billed to a CLEC once electronic ordering capabilities come on-line for that element. Otherwise, the manual ordering charge,															
	OSS - Electronic Service Order Charge, Per Local Service Request (LSR) - UNE Only				SOMEC		3.50	0.00	3.50	0.00						
	OSS - Manual Service Order Charge, Per Local Service Request (LSR) - UNE Only				SOMAN		15.75	0.00	1.97	0.00						
UNE SERVICE DATE ADVANCEMENT CHARGE																
	NOTE: The Expedite charge will be maintained commensurate with BellSouth's FCC No.1 Tariff, Section 5 as applicable.															
	UNE Expedite Charge per Circuit or Line Assignable USOC, per Day			UAL, UEANL, UCL, UEF, UDF, UEQ, UDL, UENTW, UDN, UEA, UHL, ULC, USL, U1T12, U1T48, U1TD1, U1TD3, U1TDX, U1TO3, U1TS1, U1TVX, UC1BC, UC1BL, UC1CC, UC1CL, UC1DC, UC1DL, UC1EC, UC1EL, UC1FC, UC1FL, UC1GC, UC1GL, UC1HC, UC1HL, UDL12, UDL48, UDLO3, UDLSX, UE3, ULD12, ULD48, ULDD1, ULDD3, ULDDX, ULDO3, ULDS1, ULDVX, UNC1X, UNC3X, UNCDX, UNCNX, UNCSX, UNCVX, UNLD1, UNLD3, UXTD1, UXTD3, UXTS1, U1TUC, U1TUD, U1TUB, U1TUA,NTCVG, NTCUD, NTCD1	SDASP		200.00									
ORDER MODIFICATION CHARGE																
	Order Modification Charge (OMC)						26.21	0.00	0.00	0.00						
	Order Modification Additional Dispatch Charge (OMCAD)						150.00	0.00	0.00	0.00						
UNBUNDLED EXCHANGE ACCESS LOOP																
	2-WIRE ANALOG VOICE GRADE LOOP															
	2-Wire Analog Voice Grade Loop - Service Level 2 w/Loop or Ground Start Signaling - Zone 1		1	UEA	UEAL2	13.89	105.96	68.28	52.82	10.37						
	2-Wire Analog Voice Grade Loop - Service Level 2 w/Loop or Ground Start Signaling - Zone 2		2	UEA	UEAL2	18.75	105.96	68.28	52.82	10.37						
	2-Wire Analog Voice Grade Loop - Service Level 2 w/Loop or Ground Start Signaling - Zone 3		3	UEA	UEAL2	27.55	105.96	68.28	52.82	10.37						
	2-Wire Analog Voice Grade Loop - Service Level 2 w/Loop or Ground Start Signaling - Zone 4		4	UEA	UEAL2	45.72	105.96	68.28	52.82	10.37						

UNBUNDLED NETWORK ELEMENTS - Mississippi														Attachment 2 Exh A:			
CATEGORY	RATE ELEMENTS	Interim	Zone	BCS	USOC	RATES($)					Svc Order Submitted Elec per LSR	Svc Order Submitted Manually per LSR	Incremental Charge - Manual Svc Order vs. Electronic-1st	Incremental Charge - Manual Svc Order vs. Electronic-Add'l	Incremental Charge - Manual Svc Order vs. Electronic-Disc 1st	Incremental Charge - Manual Svc Order vs. Electronic-Disc Add'l
							Nonrecurring		Nonrecurring Disconnect		OSS Rates($)					
						Rec	First	Add'l	First	Add'l	SOMEC	SOMAN	SOMAN	SOMAN	SOMAN	SOMAN
	2-Wire Analog Voice Grade Loop - Service Level 2 w/Reverse Battery Signaling - Zone 1		1	UEA	UEAR2	13.89	105.96	68.28	52.82	10.37						
	2-Wire Analog Voice Grade Loop - Service Level 2 w/Reverse Battery Signaling - Zone 2		2	UEA	UEAR2	18.75	105.96	68.28	52.82	10.37						
	2-Wire Analog Voice Grade Loop - Service Level 2 w/Reverse Battery Signaling - Zone 3		3	UEA	UEAR2	27.55	105.96	68.28	52.82	10.37						
	2-Wire Analog Voice Grade Loop - Service Level 2 w/Reverse Battery Signaling - Zone 4		4	UEA	UEAR2	45.72	105.96	68.28	52.82	10.37						
	Switch-As-Is Conversion rate per UNE Loop, Single LSR, (per DS0)			UEA	URESL		25.01	3.53								
	Switch-As-Is Conversion rate per UNE Loop, Spreadsheet, (per DS0)			UEA	URESP		26.50	5.02								
	CLEC to CLEC Conversion Charge without outside dispatch			UEA	UREWO		87.56	36.29								
	Loop Tagging - Service Level 2 (SL2)			UEA	URETL		11.19	1.10								
4-WIRE ANALOG VOICE GRADE LOOP																
	4-Wire Analog Voice Grade Loop - Zone 1		1	UEA	UEAL4	27.47	132.27	94.59	60.68	14.64						
	4-Wire Analog Voice Grade Loop - Zone 2		2	UEA	UEAL4	38.26	132.27	94.59	60.68	14.64						
	4-Wire Analog Voice Grade Loop - Zone 3		3	UEA	UEAL4	50.03	132.27	94.59	60.68	14.64						
	4-Wire Analog Voice Grade Loop - Zone 4		4	UEA	UEAL4	50.03	132.27	94.59	60.68	14.64						
	Switch-As-Is Conversion rate per UNE Loop, Single LSR, (per DS0)			UEA	URESL		25.01	3.53								
	Switch-As-Is Conversion rate per UNE Loop, Spreadsheet, (per DS0)			UEA	URESP		26.50	5.02								
	CLEC to CLEC Conversion Charge without outside dispatch			UEA	UREWO		87.56	36.29								
2-WIRE ISDN DIGITAL GRADE LOOP																
	2-Wire ISDN Digital Grade Loop - Zone 1		1	UDN	U1L2X	21.01	117.61	79.92	52.82	10.37						
	2-Wire ISDN Digital Grade Loop - Zone 2		2	UDN	U1L2X	27.59	117.61	79.92	52.82	10.37						
	2-Wire ISDN Digital Grade Loop - Zone 3		3	UDN	U1L2X	37.34	117.61	79.92	52.82	10.37						
	2-Wire ISDN Digital Grade Loop - Zone 4		4	UDN	U1L2X	59.18	117.61	79.92	52.82	10.37						
	CLEC to CLEC Conversion Charge without outside dispatch			UDN	UREWO		91.46	44.07								
2-WIRE ASYMMETRICAL DIGITAL SUBSCRIBER LINE (ADSL) COMPATIBLE LOOP																
	2 Wire Unbundled ADSL Loop including manual service inquiry & facility reservation - Zone 1		1	UAL	UAL2X	11.11	121.27	70.81	50.38	7.93						
	2 Wire Unbundled ADSL Loop including manual service inquiry & facility reservation - Zone 2		2	UAL	UAL2X	11.47	121.27	70.81	50.38	7.93						
	2 Wire Unbundled ADSL Loop including manual service inquiry & facility reservation - Zone 3		3	UAL	UAL2X	11.74	121.27	70.81	50.38	7.93						
	2 Wire Unbundled ADSL Loop including manual service inquiry & facility reservation - Zone 4		4	UAL	UAL2X	12.69	121.27	70.81	50.38	7.93						
	2 Wire Unbundled ADSL Loop without manual service inquiry & facility reservaton - Zone 1		1	UAL	UAL2W	11.11	96.15	58.03	50.38	7.93						
	2 Wire Unbundled ADSL Loop without manual service inquiry & facility reservaton - Zone 2		2	UAL	UAL2W	11.47	96.15	58.03	50.38	7.93						
	2 Wire Unbundled ADSL Loop without manual service inquiry & facility reservaton - Zone 3		3	UAL	UAL2W	11.74	96.15	58.03	50.38	7.93						
	2 Wire Unbundled ADSL Loop without manual service inquiry & facility reservaton - Zone 4		4	UAL	UAL2W	12.69	96.15	58.03	50.38	7.93						
	CLEC to CLEC Conversion Charge without outside dispatch			UAL	UREWO		86.04	40.33								
2-WIRE HIGH BIT RATE DIGITAL SUBSCRIBER LINE (HDSL) COMPATIBLE LOOP																
	2 Wire Unbundled HDSL Loop including manual service inquiry & facility reservation - Zone 1		1	UHL	UHL2X	8.75	129.98	79.52	50.38	7.93						
	2 Wire Unbundled HDSL Loop including manual service inquiry & facility reservation - Zone 2		2	UHL	UHL2X	9.22	129.98	79.52	50.38	7.93						
	2 Wire Unbundled HDSL Loop including manual service inquiry & facility reservation - Zone 3		3	UHL	UHL2X	9.87	129.98	79.52	50.38	7.93						
	2 Wire Unbundled HDSL Loop including manual service inquiry & facility reservation - Zone 4		4	UHL	UHL2X	10.46	129.98	79.52	50.38	7.93						
	2 Wire Unbundled HDSL Loop without manual service inquiry and facility reservation - Zone 1		1	UHL	UHL2W	8.75	104.86	66.74	50.38	7.93						

UNBUNDLED NETWORK ELEMENTS - Mississippi														Attachment 2 Exh A:			
CATEGORY		RATE ELEMENTS	Interim	Zone	BCS	USOC	RATES($)					Svc Order Submitted Elec per LSR	Svc Order Submitted Manually per LSR	Incremental Charge - Manual Svc Order vs. Electronic-1st	Incremental Charge - Manual Svc Order vs. Electronic-Add'l	Incremental Charge - Manual Svc Order vs. Electronic-Disc 1st	Incremental Charge - Manual Svc Order vs. Electronic-Disc Add'l
								Nonrecurring		Nonrecurring Disconnect		OSS Rates($)					
							Rec	First	Add'l	First	Add'l	SOMEC	SOMAN	SOMAN	SOMAN	SOMAN	SOMAN
		2 Wire Unbundled HDSL Loop without manual service inquiry and facility reservation - Zone 2		2	UHL	UHL2W	9.22	104.86	66.74	50.38	7.93						
		2 Wire Unbundled HDSL Loop without manual service inquiry and facility reservation - Zone 3		3	UHL	UHL2W	9.87	104.86	66.74	50.38	7.93						
		2 Wire Unbundled HDSL Loop without manual service inquiry and facility reservation - Zone 4		4	UHL	UHL2W	10.46	104.86	66.74	50.38	7.93						
		CLEC to CLEC Conversion Charge without outside dispatch			UHL	UREWO		85.98	40.33								
	4-WIRE HIGH BIT RATE DIGITAL SUBSCRIBER LINE (HDSL) COMPATIBLE LOOP																
		4 Wire Unbundled HDSL Loop including manual service inquiry and facility reservation - Zone 1		1	UHL	UHL4X	13.78	158.74	108.28	56.72	10.68						
		4-Wire Unbundled HDSL Loop including manual service inquiry and facility reservation - Zone 2		2	UHL	UHL4X	13.43	158.74	108.28	56.72	10.68						
		4-Wire Unbundled HDSL Loop including manual service inquiry and facility reservation - Zone 3		3	UHL	UHL4X	15.59	158.74	108.28	56.72	10.68						
		4-Wire Unbundled HDSL Loop including manual service inquiry and facility reservation - Zone 4		4	UHL	UHL4X	14.46	158.74	108.28	56.72	10.68						
		4-Wire Unbundled HDSL Loop without manual service inquiry and facility reservation - Zone 1		1	UHL	UHL4W	13.78	133.62	95.50	56.72	10.68						
		4-Wire Unbundled HDSL Loop without manual service inquiry and facility reservation - Zone 2		2	UHL	UHL4W	13.43	133.62	95.50	56.72	10.68						
		4-Wire Unbundled HDSL Loop without manual service inquiry and facility reservation - Zone 3		3	UHL	UHL4W	15.59	133.62	95.50	56.72	10.68						
		4-Wire Unbundled HDSL Loop without manual service inquiry and facility reservation - Zone 4		4	UHL	UHL4W	14.46	133.62	95.50	56.72	10.68						
		CLEC to CLEC Conversion Charge without outside dispatch			UHL	UREWO		85.98	40.33								
	4-WIRE DS1 DIGITAL LOOP																
		4-Wire DS1 Digital Loop - Zone 1		1	USL	USLXX	79.08	253.93	158.45	46.10	12.07						
		4-Wire DS1 Digital Loop - Zone 2		2	USL	USLXX	129.38	253.93	158.45	46.10	12.07						
		4-Wire DS1 Digital Loop - Zone 3		3	USL	USLXX	206.74	253.93	158.45	46.10	12.07						
		4-Wire DS1 Digital Loop - Zone 4		4	USL	USLXX	458.46	253.93	158.45	46.10	12.07						
		Switch-As-Is Conversion rate per UNE Loop, Single LSR, (per DS1)			USL	URESL		25.01	3.53								
		Switch-As-Is Conversion rate per UNE Loop, Spreadsheet, (per DS1)			USL	URESP		26.50	5.02								
		CLEC to CLEC Conversion Charge without outside dispatch			USL	UREWO		100.90	42.96								
	4-WIRE 19.2, 56 OR 64 KBPS DIGITAL GRADE LOOP																
		4 Wire Unbundled Digital Loop 2.4 Kbps-Zone 1		1	UDL	UDL2X	27.44	126.53	88.85	60.68	14.64						
		4 Wire Unbundled Digital Loop 2.4 Kbps - Zone 2		2	UDL	UDL2X	34.55	126.53	88.85	60.68	14.64						
		4 Wire Unbundled Digital Loop 2.4 Kbps - Zone 3		3	UDL	UDL2X	40.76	126.53	88.85	60.68	14.64						
		4 Wire Unbundled Digital Loop 2.4 Kbps - Zone 4		4	UDL	UDL2X	32.25	126.53	88.85	60.68	14.64						
		4 Wire Unbundled Digital Loop 4.8 Kbps - Zone 1		1	UDL	UDL4X	27.44	126.53	88.85	60.68	14.64						
		4 Wire Unbundled Digital Loop 4.8 Kbps - Zone 2		2	UDL	UDL4X	34.55	126.53	88.85	60.68	14.64						
		4 Wire Unbundled Digital Loop 4.8 Kbps - Zone 3		3	UDL	UDL4X	40.76	126.53	88.85	60.68	14.64						
		4 Wire Unbundled Digital Loop 4.8 Kbps - Zone 4		4	UDL	UDL4X	32.25	126.53	88.85	60.68	14.64						
		4 Wire Unbundled Digital Loop 9.6 Kbps - Zone 1		1	UDL	UDL9X	27.44	126.53	88.85	60.68	14.64						
		5 Wire Unbundled Digital Loop 9.6 Kbps - Zone 2		2	UDL	UDL9X	34.55	126.53	88.85	60.68	14.64						
		6 Wire Unbundled Digital Loop 9.6 Kbps - Zone 3		3	UDL	UDL9X	40.76	126.53	88.85	60.68	14.64						
		7 Wire Unbundled Digital Loop 9.6 Kbps - Zone 4		4	UDL	UDL9X	32.25	126.53	88.85	60.68	14.64						
		4 Wire Unbundled Digital 19.2 Kbps - Zone 1		1	UDL	UDL19	27.44	126.53	88.85	60.68	14.64						
		4 Wire Unbundled Digital 19.2 Kbps - Zone 2		2	UDL	UDL19	34.55	126.53	88.85	60.68	14.64						
		4 Wire Unbundled Digital 19.2 Kbps - Zone 3		3	UDL	UDL19	40.76	126.53	88.85	60.68	14.64						
		4 Wire Unbundled Digital 19.2 Kbps - Zone 4		4	UDL	UDL19	32.25	126.53	88.85	60.68	14.64						
		4 Wire Unbundled Digital Loop 56 Kbps - Zone 1		1	UDL	UDL56	27.44	126.53	88.85	60.68	14.64						
		4 Wire Unbundled Digital Loop 56 Kbps - Zone 2		2	UDL	UDL56	34.55	126.53	88.85	60.68	14.64						
		4 Wire Unbundled Digital Loop 56 Kbps - Zone 3		3	UDL	UDL56	40.76	126.53	88.85	60.68	14.64						
		4 Wire Unbundled Digital Loop 56 Kbps - Zone 4		4	UDL	UDL56	32.25	126.53	88.85	60.68	14.64						
		4 Wire Unbundled Digital Loop 64 Kbps - Zone 1		1	UDL	UDL64	27.44	126.53	88.85	60.68	14.64						
		4 Wire Unbundled Digital Loop 64 Kbps - Zone 2		2	UDL	UDL64	34.55	126.53	88.85	60.68	14.64						
		4 Wire Unbundled Digital Loop 64 Kbps - Zone 3		3	UDL	UDL64	40.76	126.53	88.85	60.68	14.64						

UNBUNDLED NETWORK ELEMENTS - Mississippi														Attachment 2 Exh A:			
CATEGORY		RATE ELEMENTS	Interim	Zone	BCS	USOC	RATES($)					Svc Order Submitted Elec per LSR	Svc Order Submitted Manually per LSR	Incremental Charge - Manual Svc Order vs. Electronic-1st	Incremental Charge - Manual Svc Order vs. Electronic-Add'l	Incremental Charge - Manual Svc Order vs. Electronic-Disc 1st	Incremental Charge - Manual Svc Order vs. Electronic-Disc Add'l
								Nonrecurring		Nonrecurring Disconnect		OSS Rates($)					
							Rec	First	Add'l	First	Add'l	SOMEC	SOMAN	SOMAN	SOMAN	SOMAN	SOMAN
		4 Wire Unbundled Digital Loop 64 Kbps - Zone 4		4	UDL	UDL64	32.25	126.53	88.85	60.68	14.64						
		Switch-As-Is Conversion rate per UNE Loop, Single LSR, (per DS0)			UDL	URESL		25.01	3.53								
		Switch-As-Is Conversion rate per UNE Loop, Spreadsheet, (per DS0)			UDL	URESP		26.50	5.02								
		CLEC to CLEC Conversion Charge without outside dispatch			UDL	UREWO		101.94	49.66								
	2-WIRE Unbundled COPPER LOOP																
		2-Wire Unbundled Copper Loop-Designed including manual service inquiry & facility reservation - Zone 1		1	UCL	UCLPB	11.11	120.34	69.87	50.38	7.93						
		2-Wire Unbundled Copper Loop-Designed including manual service inquiry & facility reservation - Zone 2		2	UCL	UCLPB	11.47	120.34	69.87	50.38	7.93						
		2 Wire Unbundled Copper Loop-Designed including manual service inquiry & facility reservation - Zone 3		3	UCL	UCLPB	11.74	120.34	69.87	50.38	7.93						
		2 Wire Unbundled Copper Loop-Designed including manual service inquiry & facility reservation - Zone 4		4	UCL	UCLPB	12.69	120.34	69.87	50.38	7.93						
		2-Wire Unbundled Copper Loop-Designed without manual service inquiry and facility reservation - Zone 1		1	UCL	UCLPW	11.11	95.21	57.09	50.38	7.93						
		2-Wire Unbundled Copper Loop-Designed without manual service inquiry and facility reservation - Zone 2		2	UCL	UCLPW	11.47	95.21	57.09	50.38	7.93						
		2-Wire Unbundled Copper Loop-Designed without manual service inquiry and facility reservation - Zone 3		3	UCL	UCLPW	11.74	95.21	57.09	50.38	7.93						
		2-Wire Unbundled Copper Loop-Designed without manual service inquiry and facility reservation - Zone 4		4	UCL	UCLPW	12.69	95.21	57.09	50.38	7.93						
		Order Coordination for Unbundled Copper Loops (per loop)			UCL	UCLMC		8.20	8.20								
		CLEC to CLEC Conversion Charge without outside dispatch (UCL-Des)			UCL	UREWO		95.21	42.40								
	4-WIRE COPPER LOOP																
		4-Wire Copper Loop-Designed including manual service inquiry and facility reservation - Zone 1		1	UCL	UCL4S	17.30	144.68	94.22	56.72	10.68						
		4-Wire Copper Loop-Designed including manual service inquiry and facility reservation - Zone 2		2	UCL	UCL4S	18.84	144.68	94.22	56.72	10.68						
		4-Wire Copper Loop-Designed including manual service inquiry and facility reservation - Zone 3		3	UCL	UCL4S	21.33	144.68	94.22	56.72	10.68						
		4-Wire Copper Loop-Designed including manual service inquiry and facility reservation - Zone 4		4	UCL	UCL4S	21.33	144.68	94.22	56.72	10.68						
		4-Wire Copper Loop-Designed without manual service inquiry and facility reservation - Zone 1		1	UCL	UCL4W	17.30	119.56	81.44	56.72	10.68						
		4-Wire Copper Loop-Designed without manual service inquiry and facility reservation - Zone 2		2	UCL	UCL4W	18.84	119.56	81.44	56.72	10.68						
		4-Wire Copper Loop-Designed without manual service inquiry and facility reservation - Zone 3		3	UCL	UCL4W	21.33	119.56	81.44	56.72	10.68						
		4-Wire Copper Loop-Designed without manual service inquiry and facility reservation - Zone 4		4	UCL	UCL4W	21.33	119.56	81.44	56.72	10.68						
		Order Coordination for Unbundled Copper Loops (per loop)			UCL	UCLMC		8.20	8.20								
		CLEC to CLEC Conversion Charge without outside dispatch (UCL-Des)			UCL	UREWO		95.21	42.40								
		Order Coordination for Specified Conversion Time (per LSR)			UEA, UDN, UAL, UHL, UDL, USL	OCOSL		18.19									
	Rearrangements																
		EEL to UNE-L Retermination, per 2 Wire Unbundled Voice Loop-SL2			UEA	UREEL		87.56	36.29								
		EEL to UNE-L Retermination, per 4 Wire Unbundled Voice Loop			UEA	UREEL		87.56	36.29								
		EEL to UNE-L Retermination, per 2 Wire ISDN Loop			UDN	UREEL		91.46	44.07								
		EEL to UNE-L Retermination, per 4 Wire Unbundled Digital Loop			UDL	UREEL		101.94	49.66								
		EEL to UNE-L Retermination, per 4 Wire Unbundled DS1 Loop			USL	UREEL		100.90	42.96								
UNE LOOP COMMINGLING																	
	2-WIRE ANALOG VOICE GRADE LOOP - COMMINGLING																

UNBUNDLED NETWORK ELEMENTS - Mississippi														Attachment 2 Exh A:			
CATEGORY	RATE ELEMENTS	Interim	Zone	BCS	USOC	RATES($)					Svc Order Submitted Elec per LSR	Svc Order Submitted Manually per LSR	Incremental Charge - Manual Svc Order vs. Electronic-1st	Incremental Charge - Manual Svc Order vs. Electronic-Add'l	Incremental Charge - Manual Svc Order vs. Electronic-Disc 1st	Incremental Charge - Manual Svc Order vs. Electronic-Disc Add'l
							Nonrecurring		Nonrecurring Disconnect		OSS Rates($)					
						Rec	First	Add'l	First	Add'l	SOMEC	SOMAN	SOMAN	SOMAN	SOMAN	SOMAN
	2-Wire Analog Voice Grade Loop - Service Level 2 w/Loop or Ground Start Signaling - Zone 1		1	NTCVG	UEAL2	13.89	105.96	68.28	52.82	10.37						
	2-Wire Analog Voice Grade Loop - Service Level 2 w/Loop or Ground Start Signaling - Zone 2		2	NTCVG	UEAL2	18.75	105.96	68.28	52.82	10.37						
	2-Wire Analog Voice Grade Loop - Service Level 2 w/Loop or Ground Start Signaling - Zone 3		3	NTCVG	UEAL2	27.55	105.96	68.28	52.82	10.37						
	2-Wire Analog Voice Grade Loop - Service Level 2 w/Loop or Ground Start Signaling - Zone 4		4	NTCVG	UEAL2	45.72	105.96	68.28	52.82	10.37						
	2-Wire Analog Voice Grade Loop - Service Level 2 w/Reverse Battery Signaling - Zone 1		1	NTCVG	UEAR2	13.89	105.96	68.28	52.82	10.37						
	2-Wire Analog Voice Grade Loop - Service Level 2 w/Reverse Battery Signaling - Zone 2		2	NTCVG	UEAR2	18.75	105.96	68.28	52.82	10.37						
	2-Wire Analog Voice Grade Loop - Service Level 2 w/Reverse Battery Signaling - Zone 3		3	NTCVG	UEAR2	27.55	105.96	68.28	52.82	10.37						
	2-Wire Analog Voice Grade Loop - Service Level 2 w/Reverse Battery Signaling - Zone 4		4	NTCVG	UEAR2	45.72	105.96	68.28	52.82	10.37						
	Switch-As-Is Conversion rate per UNE Loop, Single LSR, (per DS0)			NTCVG	URESL		25.01	3.53								
	Switch-As-Is Conversion rate per UNE Loop, Spreadsheet, (per DS0)			NTCVG	URESP		26.50	5.02								
	CLEC to CLEC Conversion Charge without outside dispatch			NTCVG	UREWO		87.56	36.29								
	Loop Tagging - Service Level 2 (SL2)			NTCVG	URETL		11.19	1.10								
				NTCVG												
4-WIRE ANALOG VOICE GRADE LOOP - COMMINGLING																
	4-Wire Analog Voice Grade Loop - Zone 1		1	NTCVG	UEAL4	27.47	132.27	94.59	60.68	14.64						
	4-Wire Analog Voice Grade Loop - Zone 2		2	NTCVG	UEAL4	38.26	132.27	94.59	60.68	14.64						
	4-Wire Analog Voice Grade Loop - Zone 3		3	NTCVG	UEAL4	50.03	132.27	94.59	60.68	14.64						
	4-Wire Analog Voice Grade Loop - Zone 4		4	NTCVG	UEAL4	50.03	132.27	94.59	60.68	14.64						
	Switch-As-Is Conversion rate per UNE Loop, Single LSR, (per DS0)			NTCVG	URESL		25.01	3.53								
	Switch-As-Is Conversion rate per UNE Loop, Spreadsheet, (per DS0)			NTCVG	URESP		26.50	5.02								
	CLEC to CLEC Conversion Charge without outside dispatch			NTCVG	UREWO		87.56	36.29								
4-WIRE DS1 DIGITAL LOOP																
	4-Wire DS1 Digital Loop - Zone 1		1	NTCD1	USLXX	79.08	253.93	158.45	46.10	12.07						
	4-Wire DS1 Digital Loop - Zone 2		2	NTCD1	USLXX	129.38	253.93	158.45	46.10	12.07						
	4-Wire DS1 Digital Loop - Zone 3		3	NTCD1	USLXX	206.74	253.93	158.45	46.10	12.07						
	4-Wire DS1 Digital Loop - Zone 4		4	NTCD1	USLXX	458.46	253.93	158.45	46.10	12.07						
	Switch-As-Is Conversion rate per UNE Loop, Single LSR, (per DS1)			NTCD1	URESL	0.00	25.01	3.53	0.00	0.00						
	Switch-As-Is Conversion rate per UNE Loop, Spreadsheet, (per DS1)			NTCD1	URESP	0.00	26.50	5.02	0.00	0.00						
	CLEC to CLEC Conversion Charge without outside dispatch			NTCD1	UREWO	0.00	100.90	42.96	0.00	0.00						
4-WIRE 19.2, 56 OR 64 KBPS DIGITAL GRADE LOOP																
	4 Wire Unbundled Digital Loop 2.4 Kbps-Zone 1		1	NTCUD	UDL2X	27.44	126.53	88.85	60.68	14.64						
	4 Wire Unbundled Digital Loop 2.4 Kbps - Zone 2		2	NTCUD	UDL2X	34.55	126.53	88.85	60.68	14.64						
	4 Wire Unbundled Digital Loop 2.4 Kbps - Zone 3		3	NTCUD	UDL2X	40.76	126.53	88.85	60.68	14.64						
	4 Wire Unbundled Digital Loop 2.4 Kbps - Zone 4		4	NTCUD	UDL2X	32.25	126.53	88.85	60.68	14.64						
	4 Wire Unbundled Digital Loop 4.8 Kbps - Zone 1		1	NTCUD	UDL4X	27.44	126.53	88.85	60.68	14.64						
	4 Wire Unbundled Digital Loop 4.8 Kbps - Zone 2		2	NTCUD	UDL4X	34.55	126.53	88.85	60.68	14.64						
	4 Wire Unbundled Digital Loop 4.8 Kbps - Zone 3		3	NTCUD	UDL4X	40.76	126.53	88.85	60.68	14.64						
	4 Wire Unbundled Digital Loop 4.8 Kbps - Zone 4		4	NTCUD	UDL4X	32.25	126.53	88.85	60.68	14.64						
	4 Wire Unbundled Digital Loop 9.6 Kbps - Zone 1		1	NTCUD	UDL9X	27.44	126.53	88.85	60.68	14.64						
	5 Wire Unbundled Digital Loop 9.6 Kbps - Zone 2		2	NTCUD	UDL9X	34.55	126.53	88.85	60.68	14.64						
	6 Wire Unbundled Digital Loop 9.6 Kbps - Zone 3		3	NTCUD	UDL9X	40.76	126.53	88.85	60.68	14.64						
	7 Wire Unbundled Digital Loop 9.6 Kbps - Zone 4		4	NTCUD	UDL9X	32.25	126.53	88.85	60.68	14.64						
	4 Wire Unbundled Digital 19.2 Kbps - Zone 1		1	NTCUD	UDL19	27.44	126.53	88.85	60.68	14.64						
	4 Wire Unbundled Digital 19.2 Kbps - Zone 2		2	NTCUD	UDL19	34.55	126.53	88.85	60.68	14.64						
	4 Wire Unbundled Digital 19.2 Kbps - Zone 3		3	NTCUD	UDL19	40.76	126.53	88.85	60.68	14.64						

UNBUNDLED NETWORK ELEMENTS - Mississippi														Attachment 2 Exh A:			
CATEGORY		RATE ELEMENTS	Interim	Zone	BCS	USOC	RATES($)					Svc Order Submitted Elec per LSR	Svc Order Submitted Manually per LSR	Incremental Charge - Manual Svc Order vs. Electronic-1st	Incremental Charge - Manual Svc Order vs. Electronic-Add'l	Incremental Charge - Manual Svc Order vs. Electronic-Disc 1st	Incremental Charge - Manual Svc Order vs. Electronic-Disc Add'l
								Nonrecurring		Nonrecurring Disconnect		OSS Rates($)					
							Rec	First	Add'l	First	Add'l	SOMEC	SOMAN	SOMAN	SOMAN	SOMAN	SOMAN
		4 Wire Unbundled Digital 19.2 Kbps - Zone 4		4	NTCUD	UDL19	32.25	126.53	88.85	60.68	14.64						
		4 Wire Unbundled Digital Loop 56 Kbps - Zone 1		1	NTCUD	UDL56	27.44	126.53	88.85	60.68	14.64						
		4 Wire Unbundled Digital Loop 56 Kbps - Zone 2		2	NTCUD	UDL56	34.55	126.53	88.85	60.68	14.64						
		4 Wire Unbundled Digital Loop 56 Kbps - Zone 3		3	NTCUD	UDL56	40.76	126.53	88.85	60.68	14.64						
		4 Wire Unbundled Digital Loop 56 Kbps - Zone 4		4	NTCUD	UDL56	32.25	126.53	88.85	60.68	14.64						
		4 Wire Unbundled Digital Loop 64 Kbps - Zone 1		1	NTCUD	UDL64	27.44	126.53	88.85	60.68	14.64						
		4 Wire Unbundled Digital Loop 64 Kbps - Zone 2		2	NTCUD	UDL64	34.55	126.53	88.85	60.68	14.64						
		4 Wire Unbundled Digital Loop 64 Kbps - Zone 3		3	NTCUD	UDL64	40.76	126.53	88.85	60.68	14.64						
		4 Wire Unbundled Digital Loop 64 Kbps - Zone 4		4	NTCUD	UDL64	32.25	126.53	88.85	60.68	14.64						
		Switch-As-Is Conversion rate per UNE Loop, Single LSR, (per DS0)			NTCUD	URESL		25.01	3.53								
		Switch-As-Is Conversion rate per UNE Loop, Spreadsheet, (per DS0)			NTCUD	URESP		26.50	5.02								
		CLEC to CLEC Conversion Charge without outside dispatch			NTCUD	UREWO		101.94	49.66								
		Order Coordination for Specified Conversion Time (per LSR)			NTCVG, NTCUD, NTCD1	OCOSL		18.19									
UNBUNDLED EXCHANGE ACCESS LOOP																	
	2-WIRE ANALOG VOICE GRADE LOOP																
		2-Wire Analog Voice Grade Loop - Service Level 1- Zone 1		1	UEANL	UEAL2	12.03	37.92	17.55	23.48	5.25						
		2-Wire Analog Voice Grade Loop - Service Level 1- Zone 2		2	UEANL	UEAL2	16.87	37.92	17.55	23.48	5.25						
		2-Wire Analog Voice Grade Loop - Service Level 1- Zone 3		3	UEANL	UEAL2	25.68	37.92	17.55	23.48	5.25						
		2-Wire Analog Voice Grade Loop - Service Level 1-Zone 4		4	UEANL	UEAL2	43.85	37.92	17.55	23.48	5.25						
		2-Wire Analog Voice Grade Loop - Service Level 1- Zone 1		1	UEANL	UEASL	12.03	37.92	17.55	23.48	5.25						
		2-Wire Analog Voice Grade Loop - Service Level 1- Zone 2		2	UEANL	UEASL	16.87	37.92	17.55	23.48	5.25						
		2-Wire Analog Voice Grade Loop - Service Level 1- Zone 3		3	UEANL	UEASL	25.68	37.92	17.55	23.48	5.25						
		2-Wire Analog Voice Grade Loop - Service Level 1-Zone 4		4	UEANL	UEASL	43.85	37.92	17.55	23.48	5.25						
		Tag Loop at End User Premise			UEANL	URETL		8.92	0.88								
		Loop Testing - Basic 1st Half Hour			UEANL	URET1		34.36	0.00								
		Loop Testing - Basic Additional Half Hour			UEANL	URETA		19.97	19.97								
		Manual Order Coordination for UVL-SL1s (per loop)			UEANL	UEAMC		8.20	8.20								
		Order Coordination for Specified Conversion Time for UVL-SL1 (per LSR)			UEANL	OCOSL		18.19	18.19								
		Unbundled Non-Design Voice Loop, billing for BST providing make-up (Engineering Information - E.I.)			UEANL	UEANM		13.51	13.51								
		CLEC to CLEC Conversion Charge Without Outside Dispatch			UEANL	UREWO		15.75	8.92								
	2-WIRE Unbundled COPPER LOOP																
		2-Wire Unbundled Copper Loop - Non-Designed Zone 1	I	1	UEQ	UEQ2X	11.01	36.53	16.16	22.66	4.42						
		2 Wire Unbundled Copper Loop - Non-Designed - Zone 2	I	2	UEQ	UEQ2X	11.51	36.53	16.16	22.66	4.42						
		2 Wire Unbundled Copper Loop - Non-Designed - Zone 3	I	3	UEQ	UEQ2X	11.57	36.53	16.16	22.66	4.42						
		2 Wire Unbundled Copper Loop - Non-Designed - Zone 4	I	4	UEQ	UEQ2X	13.10	36.53	16.16	22.66	4.42						
		Tag Loop at End User Premise			UEQ	URETL		8.92	0.88								
		Loop Testing - Basic 1st Half Hour			UEQ	URET1		34.36	0.00								
		Loop Testing - Basic Additional Half Hour			UEQ	URETA		19.97	19.97								
		Manual Order Coordination 2 Wire Unbundled Copper Loop - Non-Designed (per loop)			UEQ	USBMC		8.20	8.20								
		Unbundled Copper Loop - Non-Design, billing for BST providing make-up (Engineering Information - E.I.)			UEQ	UEQMU		13.51	13.51								
		CLEC to CLEC Conversion Charge Without Outside Dispatch			UEQ	UREWO		14.24	7.42								
LOOP MODIFICATION																	
		Unbundled Loop Modification, Removal of Load Coils - 2 Wire pair less than or equal to 18k ft, per Unbundled Loop			UAL, UHL, UCL, UEQ, ULS, UEA, UEANL, UEPSR, UEPSB	ULM2L		32.57	32.57								
		Unbundled Loop Modification Removal of Load Coils - 4 Wire less than or equal to 18K ft, per Unbundled Loop			UHL, UCL, UEA	ULM4L		32.57	32.57								
		Unbundled Loop Modification Removal of Bridged Tap Removal, per unbundled loop			UAL, UHL, UCL, UEQ, ULS, UEA, UEANL, UEPSR, UEPSB	ULMBT		32.59	32.59								

UNBUNDLED NETWORK ELEMENTS - Mississippi														Attachment 2 Exh A:			
CATEGORY		RATE ELEMENTS	Interim	Zone	BCS	USOC	RATES($)					Svc Order Submitted Elec per LSR	Svc Order Submitted Manually per LSR	Incremental Charge - Manual Svc Order vs. Electronic-1st	Incremental Charge - Manual Svc Order vs. Electronic-Add'l	Incremental Charge - Manual Svc Order vs. Electronic-Disc 1st	Incremental Charge - Manual Svc Order vs. Electronic-Disc Add'l
								Nonrecurring		Nonrecurring Disconnect		OSS Rates($)					
							Rec	First	Add'l	First	Add'l	SOMEC	SOMAN	SOMAN	SOMAN	SOMAN	SOMAN
SUB-LOOPS																	
	Sub-Loop Distribution																
		Sub-Loop - Per Cross Box Location - CLEC Feeder Facility Set-Up	I		UEANL, UEF	USBSA		259.69									
		Sub-Loop - Per Cross Box Location - Per 25 Pair Panel Set-Up	I		UEANL, UEF	USBSB		22.77									
		Sub-Loop - Per Building Equipment Room - CLEC Feeder Facility Set-Up	I		UEANL	USBSC		178.47									
		Sub-Loop - Per Building Equipment Room - Per 25 Pair Panel Set-Up	I		UEANL	USBSD		56.39									
		Sub-Loop Distribution Per 2-Wire Analog Voice Grade Loop - Zone 1		1	UEANL	USBN2	7.15	66.18	31.14	45.36	6.71						
		Sub-Loop Distribution Per 2-Wire Analog Voice Grade Loop - Zone 2		2	UEANL	USBN2	9.51	66.18	31.14	45.36	6.71						
		Sub-Loop Distribution Per 2-Wire Analog Voice Grade Loop - Zone 3		3	UEANL	USBN2	12.45	66.18	31.14	45.36	6.71						
		Sub-Loop Distribution Per 2-Wire Analog Voice Grade Loop - Zone 4		4	UEANL	USBN2	18.26	66.18	31.14	45.36	6.71						
		Order Coordination for Unbundled Sub-Loops, per sub-loop pair			UEANL	USBMC		8.20	8.20								
		Sub-Loop Distribution Per 4-Wire Analog Voice Grade Loop - Zone 1		1	UEANL	USBN4	7.30	79.49	44.45	51.27	9.35						
		Sub-Loop Distribution Per 4-Wire Analog Voice Grade Loop - Zone 2		2	UEANL	USBN4	13.92	79.49	44.45	51.27	9.35						
		Sub-Loop Distribution Per 4-Wire Analog Voice Grade Loop - Zone 3		3	UEANL	USBN4	16.73	79.49	44.45	51.27	9.35						
		Sub-Loop Distribution Per 4-Wire Analog Voice Grade Loop - Zone 4		4	UEANL	USBN4	16.73	79.49	44.45	51.27	9.35						
		Order Coordination for Unbundled Sub-Loops, per sub-loop pair			UEANL	USBMC		8.20	8.20								
		Sub-Loop 2-Wire Intrabuilding Network Cable (INC)			UEANL	USBR2	2.29	53.32	18.28	45.36	6.71						
		Order Coordination for Unbundled Sub-Loops, per sub-loop pair			UEANL	USBMC		8.20	8.20								
		Sub-Loop 4-Wire Intrabuilding Network Cable (INC)			UEANL	USBR4	4.40	59.60	24.55	51.27	9.35						
		Order Coordination for Unbundled Sub-Loops, per sub-loop pair			UEANL	USBMC		8.20	8.20								
		Loop Testing - Basic 1st Half Hour			UEANL	URET1		34.36	0.00								
		Loop Testing - Basic Additional Half Hour			UEANL	URETA		19.97	19.97								
		2 Wire Copper Unbundled Sub-Loop Distribution - Zone 1		1	UEF	UCS2X	6.06	66.18	31.14	45.36	6.71						
		2 Wire Copper Unbundled Sub-Loop Distribution - Zone 2		2	UEF	UCS2X	7.09	66.18	31.14	45.36	6.71						
		2 Wire Copper Unbundled Sub-Loop Distribution - Zone 3		3	UEF	UCS2X	8.16	66.18	31.14	45.36	6.71						
		2 Wire Copper Unbundled Sub-Loop Distribution - Zone 4		4	UEF	UCS2X	9.90	66.18	31.14	45.36	6.71						
		Order Coordination for Unbundled Sub-Loops, per sub-loop pair			UEF	USBMC		8.20	8.20								
		4 Wire Copper Unbundled Sub-Loop Distribution - Zone 1		1	UEF	UCS4X	5.10	79.49	44.45	51.27	9.35						
		4 Wire Copper Unbundled Sub-Loop Distribution - Zone 2		2	UEF	UCS4X	9.11	79.49	44.45	51.27	9.35						
		4 Wire Copper Unbundled Sub-Loop Distribution - Zone 3		3	UEF	UCS4X	14.00	79.49	44.45	51.27	9.35						
		4 Wire Copper Unbundled Sub-Loop Distribution - Zone 4		4	UEF	UCS4X	14.00	79.49	44.45	51.27	9.35						
		Order Coordination for Unbundled Sub-Loops, per sub-loop pair			UEF	USBMC		8.20	8.20								
		Loop Tagging Service Level 1, Unbundled Copper Loop, Non-Designed and Distribution Subloops			UEF, UEANL	URETL		8.92	0.88								
		Loop Testing - Basic 1st Half Hour			UEF	URET1		34.36	0.00								
		Loop Testing - Basic Additional Half Hour			UEF	URETA		19.97	19.97								
	Unbundled Sub-Loop Modification																
		Unbundled Sub-Loop Modification - 2-W Copper Dist Load Coil/Equip Removal per 2-W PR			UEF	ULM2X		176.80	5.13								
		Unbundled Sub-loop Modification - 4-W Copper Dist Load Coil/Equip Removal per 4-W PR			UEF	ULM4X		176.80	5.13								

UNBUNDLED NETWORK ELEMENTS - Mississippi														Attachment 2 Exh A:			
CATEGORY	RATE ELEMENTS	Interim	Zone	BCS	USOC	RATES($)					Svc Order Submitted Elec per LSR	Svc Order Submitted Manually per LSR	Incremental Charge - Manual Svc Order vs. Electronic-1st	Incremental Charge - Manual Svc Order vs. Electronic-Add'l	Incremental Charge - Manual Svc Order vs. Electronic-Disc 1st	Incremental Charge - Manual Svc Order vs. Electronic-Disc Add'l
							Nonrecurring		Nonrecurring Disconnect		OSS Rates($)					
						Rec	First	Add'l	First	Add'l	SOMEC	SOMAN	SOMAN	SOMAN	SOMAN	SOMAN
	Unbundled Loop Modification, Removal of Bridge Tap, per unbundled loop			UEF	ULMBT		279.81	6.15								
	Unbundled Network Terminating Wire (UNTW)															
	Unbundled Network Terminating Wire (UNTW) per Pair			UENTW	UENPP	0.3366	30.55									
	Network Interface Device (NID)															
	Network Interface Device (NID) - 1-2 lines			UENTW	UND12		43.84	28.90								
	Network Interface Device (NID) - 1-6 lines			UENTW	UND16		65.30	50.36								
	Network Interface Device Cross Connect - 2 W			UENTW	UNDC2		5.94	5.94								
	Network Interface Device Cross Connect - 4W			UENTW	UNDC4		5.94	5.94								
UNE OTHER, PROVISIONING ONLY - NO RATE																
	Unbundled Contact Name, Provisioning Only - no rate			UAL, UCL, UDC, UDL, UDN, UEA, UHL, UEANL, UEF, UEQ, UENTW, NTCVG, NTCUD, NTCD1, USL	UNECN	0.00	0.00									
	Unbundled DS1 Loop - Superframe Format Option - no rate			USL, NTCD1	CCOSF	0.00	0.00									
	Unbundled DS1 Loop - Expanded Superframe Format option - no rate			USL, NTCD1	CCOEF	0.00	0.00									
	NID - Dispatch and Service Order for NID installation			UENTW	UNDBX	0.00	0.00									
	UNTW Circuit Establishment, Provisioning Only - No Rate			UENTW	UENCE	0.00	0.00									
LOOP MAKE-UP																
	Loop Makeup - Preordering Without Reservation, per working or spare facility queried (Manual).			UMK	UMKLW		24.12	24.12								
	Loop Makeup - Preordering With Reservation, per spare facility queried (Manual).			UMK	UMKLP		25.58	25.58								
	Loop Makeup--With or Without Reservation, per working or spare facility queried (Mechanized)			UMK	UMKMQ		0.6652	0.6652								
LINE SPLITTING																
	END USER ORDERING-CENTRAL OFFICE BASED															
	Line Splitting - per line activation DLEC owned splitter			UEPSR UEPSB	UREOS	0.61										
	Line Splitting - per line activation BST owned - physical			UEPSR UEPSB	UREBP	0.61	18.62	10.66	10.04	4.93						
	Line Splitting - per line activation BST owned - virtual			UEPSR UEPSB	UREBV	0.61	18.62	10.66	10.04	4.93						
	UNBUNDLED EXCHANGE ACCESS LOOP															
	2-WIRE ANALOG VOICE GRADE LOOP															
	2 Wire Analog Voice Grade Loop-Service Level 1-Line Splitting-Zone 1		1	UEPSR UEPSB	UEALS	12.03	37.92	17.55	23.48	5.25						
	2 Wire Analog Voice Grade Loop-Service Level 1-Line Splitting-Zone 1		1	UEPSR UEPSB	UEABS	12.03	37.92	17.55	23.48	5.25						
	2 Wire Analog Voice Grade Loop- Service Level 1-Line Splitting-Zone 2		2	UEPSR UEPSB	UEALS	16.87	37.92	17.55	23.48	5.25						
	2 Wire Analog Voice Grade Loop- Service Level 1-Line Splitting-Zone 2		2	UEPSR UEPSB	UEABS	16.87	37.92	17.55	23.48	5.25						
	2 Wire Analog Voice Grade Loop-Service Level 1-Line Splitting-Zone 3		3	UEPSR UEPSB	UEALS	25.68	37.92	17.55	23.48	5.25						
	2 Wire Analog Voice Grade Loop-Service Level 1-Line Splitting-Zone 3		3	UEPSR UEPSB	UEABS	25.68	37.92	17.55	23.48	5.25						
	2 Wire Analog Voice Grade Loop-Service Level 1-Line Splitting-Zone 4		4	UEPSR UEPSB	UEALS	43.85	37.92	17.55	23.48	5.25						
	2 Wire Analog Voice Grade Loop-Service Level 1-Line Splitting-Zone 4		4	UEPSR UEPSB	UEABS	43.85	37.92	17.55	23.48	5.25						
	PHYSICAL COLLOCATION															
	Physical Collocation-2 Wire Cross Connects (Loop) for Line Splitting			UEPSR UEPSB	PE1LS	0.0288	12.37	11.87	6.04	5.45						
	VIRTUAL COLLOCATION															
	Virtual Collocation-2 Wire Cross Connects (Loop) for Line Splitting			UEPSR UEPSB	VE1LS	0.0268	12.37	11.87	6.04	5.45						
MAINTENANCE OF SERVICE																
	NOTE: The Expedite charge will be maintained commensurate with BellSouth's FCC No.1 Tariff, Section 13.3.1 as applicable.															

UNBUNDLED NETWORK ELEMENTS - Mississippi														Attachment 2 Exh A:			
CATEGORY		RATE ELEMENTS	Interim	Zone	BCS	USOC	RATES($)					Svc Order Submitted Elec per LSR	Svc Order Submitted Manually per LSR	Incremental Charge - Manual Svc Order vs. Electronic-1st	Incremental Charge - Manual Svc Order vs. Electronic-Add'l	Incremental Charge - Manual Svc Order vs. Electronic-Disc 1st	Incremental Charge - Manual Svc Order vs. Electronic-Disc Add'l
								Nonrecurring		Nonrecurring Disconnect		OSS Rates($)					
							Rec	First	Add'l	First	Add'l	SOMEC	SOMAN	SOMAN	SOMAN	SOMAN	SOMAN
		No Trouble Found - per 1/2 hour increments - Basic						80.00	55.00								
		No Trouble Found - per 1/2 hour increments - Overtime						90.00	65.00								
		No Trouble Found - per 1/2 hour increments - Premium						100.00	75.00								
UNBUNDLED DEDICATED TRANSPORT																	
	INTEROFFICE CHANNEL - DEDICATED TRANSPORT																
		Interoffice Channel - 2-Wire Voice Grade - per mile			U1TVX	1L5XX	0.0098										
		Interoffice Channel - 2-Wire Voice Grade - Facility Termination			U1TVX	U1TV2	22.52	40.77	27.57	17.26	7.11						
		Interoffice Channel - 2-Wire Voice Grade Rev Bat. - per mile			U1TVX	1L5XX	0.0098										
		Interoffice Channel - 2-Wire VG Rev Bat. - Facility Termination			U1TVX	U1TR2	22.52	40.77	27.57	17.26	7.11						
		Interoffice Channel - 4-Wire Voice Grade - per mile			U1TVX	1L5XX	0.0098										
		Interoffice Channel - 4- Wire Voice Grade - Facility Termination			U1TVX	U1TV4	19.79	40.77	27.57	17.26	7.11						
		Interoffice Channel - 56 kbps - per mile			U1TDX	1L5XX	0.0098										
		Interoffice Channel - 56 kbps - Facility Termination			U1TDX	U1TD5	15.68	40.77	27.57	17.26	7.11						
		Interoffice Channel - 64 kbps - per mile			U1TDX	1L5XX	0.0098										
		Interoffice Channel - 64 kbps - Facility Termination			U1TDX	U1TD6	15.68	40.77	27.57	17.26	7.11						
		Interoffice Channel - DS1 - per mile			U1TD1	1L5XX	0.201										
		Interoffice Channel - DS1 - Facility Termination			U1TD1	U1TF1	57.33	89.79	82.28	16.86	14.90						
		Interoffice Channel - DS3 - per mile			U1TD3	1L5XX	4.76										
		Interoffice Channel - DS3 - Facility Termination			U1TD3	U1TF3	641.90	280.37	163.70	62.08	60.29						
		Interoffice Channel - STS-1 - per mile			U1TS1	1L5XX	4.76										
		Interoffice Channel - STS-1 - Facility Termination			U1TS1	U1TFS	644.21	280.37	163.70	62.08	60.29						
	UNBUNDLED DARK FIBER																
		Dark Fiber - Interoffice Transport, Per Four Fiber Strands, Per Route Mile Or Fraction Thereof			UDF, UDFCX	1L5DF	28.27										
		Dark Fiber - Interoffice Transport, Per Four Fiber Strands, Per Route Mile Or Fraction Thereof			UDF, UDFCX	UDF14		642.79	138.67	326.97	203.85						
HIGH CAPACITY UNBUNDLED LOCAL LOOP																	
	DS-3/STS-1 UNBUNDLED LOCAL LOOP - Stand Alone																
		DS3 Unbundled Local Loop - per mile			UE3	1L5ND	11.20										
		DS3 Unbundled Local Loop - Facility Termination			UE3	UE3PX	326.15	454.13	265.47	123.23	86.19						
		STS-1Unbundled Local Loop - per mile			UDLSX	1L5ND	11.20										
		STS-1 Unbundled Local Loop - Facility Termination			UDLSX	UDLS1	338.55	454.13	265.47	123.23	86.19						
ENHANCED EXTENDED LINK (EELs)																	
	Network Elements Used in Combinations																
		2-Wire VG Loop (SL2) in Combination - Zone 1		1	UNCVX	UEAL2	13.89	105.96	68.28	52.82	10.37						
		2-Wire VG Loop (SL2) in Combination - Zone 2		2	UNCVX	UEAL2	18.75	105.96	68.28	52.82	10.37						
		2-Wire VG Loop (SL2) in Combination - Zone 3		3	UNCVX	UEAL2	27.55	105.96	68.28	52.82	10.37						
		2-Wire VG Loop (SL2) in Combination - Zone 4		4	UNCVX	UEAL2	45.72	105.96	68.28	52.82	10.37						
		4-Wire Analog Voice Grade Loop in Combination - Zone 1		1	UNCVX	UEAL4	27.47	132.27	94.59	60.68	14.64						
		4-Wire Analog Voice Grade Loop in Combination - Zone 2		2	UNCVX	UEAL4	38.26	132.27	94.59	60.68	14.64						
		4-Wire Analog Voice Grade Loop in Combination - Zone 3		3	UNCVX	UEAL4	50.03	132.27	94.59	60.68	14.64						
		4-Wire Analog Voice Grade Loop in Combination - Zone 4		4	UNCVX	UEAL4	50.03	132.27	94.59	60.68	14.64						
		2-Wire ISDN Loop in Combination - Zone 1		1	UNCNX	U1L2X	21.01	117.61	79.92	52.82	10.37						
		2-Wire ISDN Loop in Combination - Zone 2		2	UNCNX	U1L2X	27.59	117.61	79.92	52.82	10.37						
		2-Wire ISDN Loop in Combination - Zone 3		3	UNCNX	U1L2X	37.34	117.61	79.92	52.82	10.37						
		2-Wire ISDN Loop in Combination - Zone 4		4	UNCNX	U1L2X	59.18	117.61	79.92	52.82	10.37						
		4-Wire 56Kbps Digital Grade Loop in Combination - Zone 1		1	UNCDX	UDL56	27.44	126.53	88.85	60.68	14.64						
		4-Wire 56Kbps Digital Grade Loop in Combination - Zone 2		2	UNCDX	UDL56	34.55	126.53	88.85	60.68	14.64						
		4-Wire 56Kbps Digital Grade Loop in Combination - Zone 3		3	UNCDX	UDL56	40.76	126.53	88.85	60.68	14.64						
		4-Wire 56Kbps Digital Grade Loop in Combination - Zone 4		4	UNCDX	UDL56	32.25	126.53	88.85	60.68	14.64						
		4-Wire 64Kbps Digital Grade Loop in Combination - Zone 1		1	UNCDX	UDL64	27.44	126.53	88.85	60.68	14.64						
		4-Wire 64Kbps Digital Grade Loop in Combination - Zone 2		2	UNCDX	UDL64	34.55	126.53	88.85	60.68	14.64						
		4-Wire 64Kbps Digital Grade Loop in Combination - Zone 3		3	UNCDX	UDL64	40.76	126.53	88.85	60.68	14.64						
		4-Wire 64Kbps Digital Grade Loop in Combination - Zone 4		4	UNCDX	UDL64	32.25	126.53	88.85	60.68	14.64						
		4-Wire DS1 Digital Loop in Combination - Zone 1		1	UNC1X	USLXX	79.08	253.93	158.45	46.10	12.07						
		4-Wire DS1 Digital Loop in Combination - Zone 2		2	UNC1X	USLXX	129.38	253.93	158.45	46.10	12.07						
		4-Wire DS1 Digital Loop in Combination - Zone 3		3	UNC1X	USLXX	206.74	253.93	158.45	46.10	12.07						

UNBUNDLED NETWORK ELEMENTS - Mississippi														Attachment 2 Exh A:			
CATEGORY		RATE ELEMENTS	Interim	Zone	BCS	USOC	RATES($)					Svc Order Submitted Elec per LSR	Svc Order Submitted Manually per LSR	Incremental Charge - Manual Svc Order vs. Electronic-1st	Incremental Charge - Manual Svc Order vs. Electronic-Add'l	Incremental Charge - Manual Svc Order vs. Electronic-Disc 1st	Incremental Charge - Manual Svc Order vs. Electronic-Disc Add'l
								Nonrecurring		Nonrecurring Disconnect		OSS Rates($)					
							Rec	First	Add'l	First	Add'l	SOMEC	SOMAN	SOMAN	SOMAN	SOMAN	SOMAN
		4-Wire DS1 Digital Loop in Combination - Zone 4		4	UNC1X	USLXX	458.46	253.93	158.45	46.10	12.07						
		DS3 Local Loop in combination - per mile			UNC3X	1L5ND	11.20										
		DS3 Local Loop in combination - Facility Termination			UNC3X	UE3PX	326.15	454.13	265.47	123.23	86.19						
		STS-1 Local Loop in combination - per mile			UNCSX	1L5ND	11.20										
		STS-1 Local Loop in combination - Facility Termination			UNCSX	UDLS1	338.55	454.13	265.47	123.23	86.19						
		Interoffice Channel in combination - 2-wire VG - per mile			UNCVX	1L5XX	0.0098										
		Interoffice Channel in combination - 2-wire VG - Facility Termination			UNCVX	U1TV2	20.32	40.77	27.57	17.26	7.11						
		Interoffice Channel in combination - 4-wire VG - per mile			UNCVX	1L5XX	0.0098										
		Interoffice Channel in combination - 4-wire VG - Facility Termination			UNCVX	U1TV4	17.86	40.77	27.57	17.26	7.11						
		Interoffice Channel in combination - 4-wire 56 kbps - per mile			UNCDX	1L5XX	0.0098										
		Interoffice Channel in combination - 4-wire 56 kbps - Facility Termination			UNCDX	U1TD5	14.04	40.77	27.57	17.26	7.11						
		Interoffice Channel in combination - 4-wire 64 kbps - per mile			UNCDX	1L5XX	0.0098										
		Interoffice Channel in combination - 4-wire 64 kbps - Facility Termination			UNCDX	U1TD6	14.04	40.77	27.57	17.26	7.11						
		Interoffice Channel in combination - DS1 - per mile			UNC1X	1L5XX	0.201										
		Interoffice Channel in combination - DS1 Facility Termination			UNC1X	U1TF1	51.72	89.79	82.28	16.86	14.90						
		Interoffice Channel in combination - DS3 - per mile			UNC3X	1L5XX	4.76										
		Interoffice Channel in combination - DS3 - Facility Termination			UNC3X	U1TF3	579.12	280.37	163.70	62.08	60.29						
		Interoffice Channel in combination - STS-1 - per mile			UNCSX	1L5XX	4.76										
		Interoffice Channel in combination - STS-1 Facility Termination			UNCSX	U1TFS	581.21	280.37	163.70	62.08	60.29						
ADDITIONAL NETWORK ELEMENTS																	
	Optional Features & Functions:																
		Clear Channel Capability Extended Frame Option - per DS1	I		U1TD1, ULDD1,UNC1X	CCOEF		0.00	0.00	0.00	0.00						
		Clear Channel Capability Super FrameOption - per DS1	I		U1TD1, ULDD1,UNC1X	CCOSF		0.00	0.00	0.00	0.00						
		Clear Channel Capability (SF/ESF) Option - Subsequent Activity - per DS1	I		ULDD1, U1TD1, UNC1X, USL	NRCCC		184.60	23.78	1.96	0.76						
		C-bit Parity Option - Subsequent Activity - per DS3	i		U1TD3, ULDD3, UE3, UNC3X	NRCC3		218.72	7.66	0.7201	0.00						
		DS1 to DS0 Channel System per month			UNC1X	MQ1	102.85	91.57	62.94	10.87	10.10						
		DS3 to DS1 Channel System per month			UNC3X, UNCSX	MQ3	170.63	179.17	94.52	34.30	32.82						
		Voice Grade COCI in combination			UNCVX	1D1VG	0.5737	6.62	4.74								
		Voice Grade COCI - DS1 to DS0 Channel System - per month used for a Local Loop			UEA	1D1VG	0.5737	6.62	4.74								
		Voice Grade COCI - DS1 to DS0 Channel System - per month used for connection to a channelized DS1 Local Channel in the same SWC as collocation			U1TUC	1D1VG	0.5737	6.62	4.74								
		OCU-DP COCI (2.4-64kbs) in combination			UNCDX	1D1DD	1.22	6.62	4.74								
		OCU-DP COCI (data) - DS1 to DS0 Channel System - per month (2.4-64kbs) used for a Local Loop			UDL	1D1DD	1.22	6.62	4.74								
		OCU-DP COCI (data) - DS1 to DS0 Channel System - per month (2.4-64kbs) used for connection to a channelized DS1 Local Channel in the same SWC as collocation			U1TUD	1D1DD	1.22	6.62	4.74								
		2-wire ISDN COCI (BRITE) in combination			UNCNX	UC1CA	2.62	6.62	4.74								
		2-wire ISDN COCI (BRITE) - for Local Loop			UDN	UC1CA	2.62	6.62	4.74								
		2-wire ISDN COCI (BRITE) - for connection to DS1 Local Channel in the same SWC as collocation			U1TUB	UC1CA	2.62	6.62	4.74								
		DS1 COCI in combination			UNC1X	UC1D1	12.96	6.62	4.74								
		DS1 COCI - for Local Channel			ULDD1	UC1D1	12.96	6.62	4.74								
		DS1 COCI - for Interoffice Channel			U1TD1	UC1D1	12.96	6.62	4.74								
		DS1 COCI - for Loop			USL	UC1D1	12.96	6.62	4.74								
		DS1 COCI - for DS1 Local Channel in the same SWC as collocation			U1TUA	UC1D1	12.96	6.62	4.74								

UNBUNDLED NETWORK ELEMENTS - Mississippi														Attachment 2 Exh A:			
CATEGORY		RATE ELEMENTS	Interim	Zone	BCS	USOC	RATES($)					Svc Order Submitted Elec per LSR	Svc Order Submitted Manually per LSR	Incremental Charge - Manual Svc Order vs. Electronic-1st	Incremental Charge - Manual Svc Order vs. Electronic-Add'l	Incremental Charge - Manual Svc Order vs. Electronic-Disc 1st	Incremental Charge - Manual Svc Order vs. Electronic-Disc Add'l
								Nonrecurring		Nonrecurring Disconnect		OSS Rates($)					
							Rec	First	Add'l	First	Add'l	SOMEC	SOMAN	SOMAN	SOMAN	SOMAN	SOMAN
		Wholesale to UNE, Switch-As-Is Conversion Charge			UNCVX, U1TVX, UNCDX, U1TDX, UNC1X, U1TD1,UNC3X, U1TD3, UNCSX, U1TS1, UDF,UDFCX	UNCCC		5.63	5.63								
		Unbundled Misc Rate Element, SNE SAI, Single Network Element - Switch As Is Non-recurring Charge, per circuit (LSR)	I		U1TVX, U1TDX, U1TD1, U1TD3, U1TS1, UDF, UE3	URESL		36.87	16.14								
		Unbundled Misc Rate Element, SNE SAI, Single Network Element - Switch As Is Non-recurring Charge, incremental charge per circuit on a spreadsheet	I		U1TVX, U1TDX, U1TD1, U1TD3, U1TS1, UDF, UE3	URESP		1.49	1.49								
		UNE Reconfiguration Change Charge per Circuit	I		UNC1X	URERC		35.00	35.00								
		UNE Reconfiguration Change Charge per Circuit Project Managed	I		UNC1X	URERP		1.49	1.49								
	Access to DCS - Customer Reconfiguration (FlexServ)																
		Customer Reconfiguration Establishment						1.49		1.90							
		DS1 DCS Termination with DS0 Switching					20.81	25.69	19.77	17.15	13.79						
		DS1 DCS Termination with DS1 Switching					10.73	18.57	12.65	12.60	9.24						
		DS3 DCS Termination with DS1 Switching					145.05	25.69	19.77	17.15	13.79						
	Service Rearrangements																
		NRC - Change in Facility Assignment per circuit Service Rearrangement	I		U1TVX, U1TDX, UEA, UDL, U1TUC, U1TUD, U1TUB, ULDVX, ULDDX, UNCVX, UNCDX, UNC1X	URETD		100.90	42.96								
		NRC - Change in Facility Assignment per circuit Project Management (added to CFA per circuit if project managed)	I		U1TVX, U1TDX, UEA, UDL, U1TUC, U1TUD, U1TUB, ULDVX, ULDDX, UNCVX, UNCDX, UNC1X	URETB		1.28	1.28								
		NRC - Order Coordination Specific Time - Dedicated Transport	I		UNC1X	OCOSR		18.87	18.87								
COMMINGLING																	
		Commingling Authorization			UNCVX, UNCDX, UNC1X, UNC3X, UNCSX, U1TD1, U1TD3, U1TS1, UE3, UDLSX, U1TVX, U1TDX, U1TUB, ULDVX, ULDD1, ULDD3, ULDS1	CMGAU	0.00	0.00	0.00	0.00	0.00						
	Commingled (UNE part of single bandwidth circuit)																
		Commingled VG COCI			XDV2X, NTCVG	1D1VG	0.5737	6.62	4.74								
		Commingled Digital COCI			XDV6X, NTCUD	1D1DD	1.22	6.62	4.74								
		Commingled ISDN COCI			XDD4X	UC1CA	2.62	6.62	4.74								
		Commingled 2-wire VG Interoffice Channel			XDV2X	U1TV2	22.52	40.77	27.57	17.26	7.11						
		Commingled 4-wire VG Interoffice Channel			XDV6X	U1TV4	19.79	40.77	27.57	17.26	7.11						
		Commingled 56kbps Interoffice Channel			XDD4X	U1TD5	15.68	40.77	27.57	17.26	7.11						
		Commingled 64kbps Interoffice Channel			XDD4X	U1TD6	15.68	40.77	27.57	17.26	7.11						
		Commingled VG/DS0 Interoffice Channel Mileage			XDV2X, XDV6X, XDD4X	1L5XX	0.0098										
		Commingled 2-wire Local Loop Zone 1		1	XDV2X	UEAL2	13.89	105.96	68.28	52.82	10.37						
		Commingled 2-wire Local Loop Zone 2		2	XDV2X	UEAL2	18.75	105.96	68.28	52.82	10.37						
		Commingled 2-wire Local Loop Zone 3		3	XDV2X	UEAL2	27.55	105.96	68.28	52.82	10.37						
		Commingled 2-wire Local Loop Zone 4		4	XDV2X	UEAL2	45.72	105.96	68.28	52.82	10.37						

UNBUNDLED NETWORK ELEMENTS - Mississippi													Attachment 2 Exh A:			
CATEGORY	RATE ELEMENTS	Interim	Zone	BCS	USOC	RATES($)					Svc Order Submitted Elec per LSR	Svc Order Submitted Manually per LSR	Incremental Charge - Manual Svc Order vs. Electronic-1st	Incremental Charge - Manual Svc Order vs. Electronic-Add'l	Incremental Charge - Manual Svc Order vs. Electronic-Disc 1st	Incremental Charge - Manual Svc Order vs. Electronic-Disc Add'l
							Nonrecurring		Nonrecurring Disconnect		OSS Rates($)					
						Rec	First	Add'l	First	Add'l	SOMEC	SOMAN	SOMAN	SOMAN	SOMAN	SOMAN
	Commingled 4-wire Local Loop Zone 1		1	XDV6X	UEAL4	27.47	132.27	94.59	60.68	14.64						
	Commingled 4-wire Local Loop Zone 2		2	XDV6X	UEAL4	38.26	132.27	94.59	60.68	14.64						
	Commingled 4-wire Local Loop Zone 3		3	XDV6X	UEAL4	50.03	132.27	94.59	60.68	14.64						
	Commingled 4-wire Local Loop Zone 4		4	XDV6X	UEAL4	50.03	132.27	94.59	60.68	14.64						
	Commingled 56kbps Local Loop Zone 1		1	XDD4X	UDL56	27.44	126.53	88.85	60.68	14.64						
	Commingled 56kbps Local Loop Zone 2		2	XDD4X	UDL56	34.55	126.53	88.85	60.68	14.64						
	Commingled 56kbps Local Loop Zone 3		3	XDD4X	UDL56	40.76	126.53	88.85	60.68	14.64						
	Commingled 56kbps Local Loop Zone 4		4	XDD4X	UDL56	32.25	126.53	88.85	60.68	14.64						
	Commingled 64kbps Local Loop Zone 1		1	XDD4X	UDL64	27.44	126.53	88.85	60.68	14.64						
	Commingled 64kbps Local Loop Zone 2		2	XDD4X	UDL64	34.55	126.53	88.85	60.68	14.64						
	Commingled 64kbps Local Loop Zone 3		3	XDD4X	UDL64	40.76	126.53	88.85	60.68	14.64						
	Commingled 64kbps Local Loop Zone 4		4	XDD4X	UDL64	32.25	126.53	88.85	60.68	14.64						
	Commingled ISDN Local Loop Zone 1		1	XDD4X	U1L2X	21.01	117.61	79.92	52.82	10.37						
	Commingled ISDN Local Loop Zone 2		2	XDD4X	U1L2X	27.59	117.61	79.92	52.82	10.37						
	Commingled ISDN Local Loop Zone 3		3	XDD4X	U1L2X	37.34	117.61	79.92	52.82	10.37						
	Commingled ISDN Local Loop Zone 4		4	XDD4X	U1L2X	59.18	117.61	79.92	52.82	10.37						
	Commingled DS1 COCI			XDH1X, NTCD1	UC1D1	12.96	6.62	4.74								
	Commingled DS1 Interoffice Channel			XDH1X	U1TF1	57.33	89.79	82.28	16.86	14.90						
	Commingled DS1 Interoffice Channel Mileage			XDH1X	1L5XX	0.201										
	Commingled DS1/DS0 Channel System			XDH1X	MQ1	102.85	91.57	62.94	10.87	10.10						
	Commingled DS1 Local Loop Zone 1		1	XDH1X	USLXX	79.08	253.93	158.45	46.10	12.07						
	Commingled DS1 Local Loop Zone 2		2	XDH1X	USLXX	129.38	253.93	158.45	46.10	12.07						
	Commingled DS1 Local Loop Zone 3		3	XDH1X	USLXX	206.74	253.93	158.45	46.10	12.07						
	Commingled DS1 Local Loop Zone 4		4	XDH1X	USLXX	458.46	253.93	158.45	46.10	12.07						
	Commingled DS3 Local Loop			HFQC6	UE3PX	326.15	454.13	265.47	123.23	86.19						
	Commingled DS3/STS-1 Local Loop Mileage			HFQC6, HFRST	1L5ND	11.20										
	Commingled STS-1 Local Loop			HFRST	UDLS1	338.55	454.13	265.47	123.23	86.19						
	Commingled DS3/DS1 Channel System			HFQC6	MQ3	170.63	179.17	94.52	34.30	32.82						
	Commingled DS3 Interoffice Channel			HFQC6	U1TF3	641.90	280.37	163.70	62.08	60.29						
	Commingled DS3 Interoffice Channel Mileage			HFQC6	1L5XX	4.76										
	Commingled STS-1Interoffice Channel			HFRST	U1TFS	644.21	280.37	163.70	62.08	60.29						
	Commingled STS-1Interoffice Channel Mileage			HFRST	1L5XX	4.76										
	Commingled Dark Fiber - Interoffice Transport, Per Four Fiber Strands, Per Route Mile Or Fraction Thereof			HEQDL	1L5DF	28.27										
	Commingled Dark Fiber - Interoffice Transport, Per Four Fiber Strands, Per Route Mile Or Fraction Thereof			HEQDL	UDF14		642.79	138.67	326.97	203.85						
SIGNALING (CCS7)																
	NOTE:"bk" beside a rate indicates that the parties have agreed to bill and keep for that element pursuant to the terms and conditions in Attachment 3.															
	CCS7 Signaling Usage, Per TCAP Message					0.0000597bk										
	CCS7 Signaling Usage, Per ISUP Message					0.0000149bk										
LNP Query Service																
	LNP Charge Per query					0.0008477										
	LNP Service Establishment Manual						12.59	12.59	11.58	11.58						
	LNP Service Provisioning with Point Code Establishment						596.94	304.96	270.49	198.89						
911 PBX LOCATE																
	911 PBX LOCATE DATABASE CAPABILITY															
	Service Establishment per CLEC per End User Account			9PBDC	9PBEU		1,822.00									
	Changes to TN Range or Customer Profile			9PBDC	9PBTN		182.29									
	Per Telephone Number (Monthly)			9PBDC	9PBMM	0.07										
	Change Company (Service Provider) ID			9PBDC	9PBPC		535.11									
	PBX Locate Service Support per CLEC (Monthlt)			9PBDC	9PBMR	178.43										
	Service Order Charge			9PBDC	9PBSC		15.75									
	911 PBX LOCATE TRANSPORT COMPONENT															
	See Att 3															
	Note: Rates displaying an "I" in Interim column are interim as a result of a Commission order.															

UNBUNDLED NETWORK ELEMENTS - North Carolina														Attachment: 2 Exh A			
CATEGORY		RATE ELEMENTS	Interim	Zone	BCS	USOC	RATES($)					Svc Order Submitted Elec per LSR	Svc Order Submitted Manually per LSR	Incremental Charge - Manual Svc Order vs. Electronic-1st	Incremental Charge - Manual Svc Order vs. Electronic-Add'l	Incremental Charge - Manual Svc Order vs. Electronic-Disc 1st	Incremental Charge - Manual Svc Order vs. Electronic-Disc Add'l
							Rec	Nonrecurring		Nonrecurring Disconnect		OSS Rates($)					
								First	Add'l	First	Add'l	SOMEC	SOMAN	SOMAN	SOMAN	SOMAN	SOMAN
	The "Zone" shown in the sections for stand-alone loops or loops as part of a combination refers to Geographically Deaveraged UNE Zones. To view Geographically Deaveraged UNE Zone Designations by Central Office, refer to internet Website: http://www.interconnection.bellsouth.com/become_a_clec/html/interconnection.htm																
OPERATIONS SUPPORT SYSTEMS (OSS) - "REGIONAL RATES"																	
	NOTE: (1) CLEC should contact its contract negotiator if it prefers the "state specific" OSS charges as ordered by the State Commissions. The OSS charges currently contained in this rate exhibit are the BellSouth "regional" service ordering charges. CLEC may elect either the state specific Commission ordered rates for the service ordering charges, or CLEC may elect the regional service ordering charge, however, CLEC can not obtain a mixture of the two regardless if CLEC has a interconnection contract established in each of the 9 states.																
	NOTE: (2) Any element that can be ordered electronically will be billed according to the SOMEC rate listed in this category. Please refer to BellSouth's Local Ordering Handbook (LOH) to determine if a product can be ordered electronically. For those elements that cannot be ordered electronically at present per the LOH, the listed SOMEC rate in this category reflects the charge that would be billed to a CLEC once electronic ordering capabilities come on-line for that element. Otherwise, the manual ordering charge, SOMAN, will be applied to a CLECs bill when it submits an LSR to BellSouth.																
		OSS - Electronic Service Order Charge, Per Local Service Request (LSR) - UNE Only				SOMEC		3.50	0.00	3.50	0.00						
		OSS - Manual Service Order Charge, Per Local Service Request (LSR) - UNE Only				SOMAN		15.20	0.00	15.20	0.00						
UNE SERVICE DATE ADVANCEMENT CHARGE																	
	NOTE: The Expedite charge will be maintained commensurate with BellSouth's FCC No.1 Tariff, Section 5 as applicable.																
		UNE Expedite Charge per Circuit or Line Assignable USOC, per Day			UAL, UEANL, UCL, UEF, UDF, UEQ, UDL, UENTW, UDN, UEA, UHL, ULC, USL, U1T12, U1T48, U1TD1, U1TD3, U1TDX, U1TO3, U1TS1, U1TVX, UC1BC, UC1BL, UC1CC, UC1CL, UC1DC, UC1DL, UC1EC, UC1EL, UC1FC, UC1FL, UC1GC, UC1GL, UC1HC, UC1HL, UDL12, UDL48, UDLO3, UDLSX, UE3, ULD12, ULD48, ULDD1, ULDD3, ULDDX, ULDO3, ULDS1, ULDVX, UNC1X, UNC3X, UNCDX, UNCNX, UNCSX, UNCVX, UNLD1, UNLD3, UXTD1, UXTD3, UXTS1, U1TUC, U1TUD, U1TUB, U1TUA,NTCVG, NTCUD, NTCD1	SDASP		200.00									
ORDER MODIFICATION CHARGE																	
		Order Modification Charge (OMC)						26.21	0.00	0.00	0.00						
		Order Modification Additional Dispatch Charge (OMCAD)						0.00	0.00	0.00	0.00						
UNBUNDLED EXCHANGE ACCESS LOOP																	
	2-WIRE ANALOG VOICE GRADE LOOP																
		2-Wire Analog Voice Grade Loop - Service Level 1- Zone 1		1	UEANL	UEAL2	10.82	36.54	16.87								
		2-Wire Analog Voice Grade Loop - Service Level 1- Zone 2		2	UEANL	UEAL2	16.21	36.54	16.87								
		2-Wire Analog Voice Grade Loop - Service Level 1- Zone 3		3	UEANL	UEAL2	24.08	36.54	16.87								
		2-Wire Analog Voice Grade Loop - Service Level 1- Zone 1		1	UEANL	UEASL	10.82	36.54	16.87								
		2-Wire Analog Voice Grade Loop - Service Level 1- Zone 2		2	UEANL	UEASL	16.21	36.54	16.87								
		2-Wire Analog Voice Grade Loop - Service Level 1- Zone 3		3	UEANL	UEASL	24.08	36.54	16.87								

CATEGORY	RATE ELEMENTS	Interim	Zone	BCS	USOC	RATES($)					Svc Order Submitted Elec per LSR	Svc Order Submitted Manually per LSR	Incremental Charge - Manual Svc Order vs. Electronic-1st	Incremental Charge - Manual Svc Order vs. Electronic-Add'l	Incremental Charge - Manual Svc Order vs. Electronic-Disc 1st	Incremental Charge - Manual Svc Order vs. Electronic-Disc Add'l
						Rec	Nonrecurring		Nonrecurring Disconnect		OSS Rates($)					
							First	Add'l	First	Add'l	SOMEC	SOMAN	SOMAN	SOMAN	SOMAN	SOMAN
	Tag Loop at End User Premise			UEANL	URETL		8.93	0.88								
	Loop Testing - Basic 1st Half Hour			UEANL	URET1		33.17	0.00								
	Loop Testing - Basic Additional Half Hour			UEANL	URETA		19.28	19.28								
	Manual Order Coordination for UVL-SL1s (per loop)			UEANL	UEAMC		7.92	7.92								
	Order Coordination for Specified Conversion Time for UVL-SL1 (per LSR)			UEANL	OCOSL		17.56									
	Unbundled Non-Design Voice Loop, billing for BST providing make-up (Engineering Information - E.I.)			UEANL	UEANM		13.04	13.04								
	CLEC to CLEC Conversion Charge Without Outside Dispatch (UVL-SL1)			UEANL	UREWO		15.74	8.92								
	Bulk Migration, per 2 Wire Voice Loop-SL1			UEANL	UREPN		36.54	16.87								
	Bulk Migration Order Coordination, per 2 Wire Voice Loop-SL1			UEANL	UREPM		7.92	7.92								
	2-WIRE Unbundled COPPER LOOP															
	2-Wire Unbundled Copper Loop - Non-Designed Zone 1		1	UEQ	UEQ2X	10.93	35.27	15.60								
	2 Wire Unbundled Copper Loop - Non-Designed - Zone 2		2	UEQ	UEQ2X	12.75	35.27	15.60								
	2 Wire Unbundled Copper Loop - Non-Designed - Zone 3		3	UEQ	UEQ2X	13.92	35.27	15.60								
	Tag Loop at End User Premise			UEQ	URETL		8.93	0.88								
	Loop Testing - Basic 1st Half Hour			UEQ	URET1		33.17	0.00								
	Loop Testing - Basic Additional Half Hour			UEQ	URETA		19.28	19.28								
	Manual Order Coordination 2 Wire Unbundled Copper Loop - Non-Designed (per loop)			UEQ	USBMC		7.92	7.92								
	Unbundled Copper Loop - Non-Design, billing for BST providing make-up (Engineering Information - E.I.)			UEQ	UEQMU		13.04	13.04								
	CLEC to CLEC Conversion Charge Without Outside Dispatch (UCL-ND)			UEQ	UREWO		14.23	7.41								
	Bulk Migration, per 2 Wire UCL-ND			UEQ	UREPN		35.27	15.60								
	Bulk Migration Order Coordination, per 2 Wire UCL-ND			UEQ	UREPM		7.92	7.92								
UNBUNDLED EXCHANGE ACCESS LOOP																
	2-WIRE ANALOG VOICE GRADE LOOP															
	2-Wire Analog Voice Grade Loop - Service Level 2 w/Loop or Ground Start Signaling - Zone 1		1	UEA	UEAL2	11.96	102.10	65.72								
	2-Wire Analog Voice Grade Loop - Service Level 2 w/Loop or Ground Start Signaling - Zone 2		2	UEA	UEAL2	17.36	102.10	65.72								
	2-Wire Analog Voice Grade Loop - Service Level 2 w/Loop or Ground Start Signaling - Zone 3		3	UEA	UEAL2	25.23	102.10	65.72								
	2-Wire Analog Voice Grade Loop - Service Level 2 w/Reverse Battery Signaling - Zone 1		1	UEA	UEAR2	11.96	102.10	65.72								
	2-Wire Analog Voice Grade Loop - Service Level 2 w/Reverse Battery Signaling - Zone 2		2	UEA	UEAR2	17.36	102.10	65.72								
	2-Wire Analog Voice Grade Loop - Service Level 2 w/Reverse Battery Signaling - Zone 3		3	UEA	UEAR2	25.23	102.10	65.72								
	Switch-As-Is Conversion rate per UNE Loop, Single LSR, (per DS0)			UEA	URESL		25.03	3.53								
	Switch-As-Is Conversion rate per UNE Loop, Spreadsheet, (per DS0)			UEA	URESP		26.52	5.02								
	CLEC to CLEC Conversion Charge without outside dispatch			UEA	UREWO		87.49	36.26								
	Loop Tagging - Service Level 2 (SL2)			UEA	URETL		11.20	1.10								
	Bulk Migration, per 2 Wire Voice Loop-SL2			UEA	UREPN		102.10	65.72								
	Bulk Migration Order Coordination, per 2 Wire Voice Loop-SL2			UEA	UREPM		0.00	0.00								
	4-WIRE ANALOG VOICE GRADE LOOP															
	4-Wire Analog Voice Grade Loop - Zone 1		1	UEA	UEAL4	19.52	127.40	91.02								
	4-Wire Analog Voice Grade Loop - Zone 2		2	UEA	UEAL4	24.74	127.40	91.02								
	4-Wire Analog Voice Grade Loop - Zone 3		3	UEA	UEAL4	46.11	127.40	91.02								
	Switch-As-Is Conversion rate per UNE Loop, Single LSR, (per DS0)			UEA	URESL		25.03	3.53								
	Switch-As-Is Conversion rate per UNE Loop, Spreadsheet, (per DS0)			UEA	URESP		26.52	5.02								
	CLEC to CLEC Conversion Charge without outside dispatch			UEA	UREWO		87.49	36.26								
	2-WIRE ISDN DIGITAL GRADE LOOP															

UNBUNDLED NETWORK ELEMENTS - North Carolina														Attachment: 2 Exh A			
CATEGORY		RATE ELEMENTS	Interim	Zone	BCS	USOC	RATES($)					Svc Order Submitted Elec per LSR	Svc Order Submitted Manually per LSR	Incremental Charge - Manual Svc Order vs. Electronic-1st	Incremental Charge - Manual Svc Order vs. Electronic-Add'l	Incremental Charge - Manual Svc Order vs. Electronic-Disc 1st	Incremental Charge - Manual Svc Order vs. Electronic-Disc Add'l
							Rec	Nonrecurring		Nonrecurring Disconnect		OSS Rates($)					
								First	Add'l	First	Add'l	SOMEC	SOMAN	SOMAN	SOMAN	SOMAN	SOMAN
		2-Wire ISDN Digital Grade Loop - Zone 1		1	UDN	U1L2X	19.78	113.34	76.96								
		2-Wire ISDN Digital Grade Loop - Zone 2		2	UDN	U1L2X	26.16	113.34	76.96								
		2-Wire ISDN Digital Grade Loop - Zone 3		3	UDN	U1L2X	35.37	113.34	76.96								
		CLEC to CLEC Conversion Charge without outside dispatch			UDN	UREWO		91.39	44.04								
	2-WIRE ASYMMETRICAL DIGITAL SUBSCRIBER LINE (ADSL) COMPATIBLE LOOP																
		2 Wire Unbundled ADSL Loop including manual service inquiry & facility reservation - Zone 1		1	UAL	UAL2X	10.14	117.08	68.36								
		2 Wire Unbundled ADSL Loop including manual service inquiry & facility reservation - Zone 2		2	UAL	UAL2X	11.59	117.08	68.36								
		2 Wire Unbundled ADSL Loop including manual service inquiry & facility reservation - Zone 3		3	UAL	UAL2X	12.28	117.08	68.36								
		2 Wire Unbundled ADSL Loop without manual service inquiry & facility reservaton - Zone 1		1	UAL	UAL2W	10.14	92.83	56.02								
		2 Wire Unbundled ADSL Loop without manual service inquiry & facility reservaton - Zone 2		2	UAL	UAL2W	11.59	92.83	56.02								
		2 Wire Unbundled ADSL Loop without manual service inquiry & facility reservaton - Zone 3		3	UAL	UAL2W	12.28	92.83	56.02								
		CLEC to CLEC Conversion Charge without outside dispatch			UAL	UREWO		78.06	32.38								
	2-WIRE HIGH BIT RATE DIGITAL SUBSCRIBER LINE (HDSL) COMPATIBLE LOOP																
		2 Wire Unbundled HDSL Loop including manual service inquiry & facility reservation - Zone 1		1	UHL	UHL2X	7.95	125.50	76.77								
		2 Wire Unbundled HDSL Loop including manual service inquiry & facility reservation - Zone 2		2	UHL	UHL2X	9.15	125.50	76.77								
		2 Wire Unbundled HDSL Loop including manual service inquiry & facility reservation - Zone 3		3	UHL	UHL2X	9.53	125.50	76.77								
		2 Wire Unbundled HDSL Loop without manual service inquiry and facility reservation - Zone 1		1	UHL	UHL2W	7.95	101.24	64.43								
		2 Wire Unbundled HDSL Loop without manual service inquiry and facility reservation - Zone 2		2	UHL	UHL2W	9.15	101.24	64.43								
		2 Wire Unbundled HDSL Loop without manual service inquiry and facility reservation - Zone 3		3	UHL	UHL2W	9.53	101.24	64.43								
		CLEC to CLEC Conversion Charge without outside dispatch			UHL	UREWO		78.00	32.38								
	4-WIRE HIGH BIT RATE DIGITAL SUBSCRIBER LINE (HDSL) COMPATIBLE LOOP																
		4 Wire Unbundled HDSL Loop including manual service inquiry and facility reservation - Zone 1		1	UHL	UHL4X	11.01	153.26	104.54								
		4-Wire Unbundled HDSL Loop including manual service inquiry and facility reservation - Zone 2		2	UHL	UHL4X	12.20	153.26	104.54								
		4-Wire Unbundled HDSL Loop including manual service inquiry and facility reservation - Zone 3		3	UHL	UHL4X	13.49	153.26	104.54								
		4-Wire Unbundled HDSL Loop without manual service inquiry and facility reservation - Zone 1		1	UHL	UHL4W	11.01	129.00	92.20								
		4-Wire Unbundled HDSL Loop without manual service inquiry and facility reservation - Zone 2		2	UHL	UHL4W	12.20	129.00	92.20								
		4-Wire Unbundled HDSL Loop without manual service inquiry and facility reservation - Zone 3		3	UHL	UHL4W	13.49	129.00	92.20								
		CLEC to CLEC Conversion Charge without outside dispatch			UHL	UREWO		78.00	32.38								
	4-WIRE DS1 DIGITAL LOOP																
		4-Wire DS1 Digital Loop - Zone 1		1	USL	USLXX	63.62	245.16	152.98								
		4-Wire DS1 Digital Loop - Zone 2		2	USL	USLXX	104.40	245.16	152.98								
		4-Wire DS1 Digital Loop - Zone 3		3	USL	USLXX	210.22	245.16	152.98								
		Switch-As-Is Conversion rate per UNE Loop, Single LSR, (per DS1)			USL	URESL		25.03	3.53								
		Switch-As-Is Conversion rate per UNE Loop, Spreadsheet, (per DS1)			USL	URESP		26.52	5.02								
		CLEC to CLEC Conversion Charge without outside dispatch			USL	UREWO		100.82	42.93								
	4-WIRE 19.2, 56 OR 64 KBPS DIGITAL GRADE LOOP																
		4 Wire Unbundled Digital Loop 2.4 Kbps - Zone 1		1	UDL	UDL2X	21.98	121.86	85.48								
		4 Wire Unbundled Digital Loop 2.4 Kbps - Zone 2		2	UDL	UDL2X	27.58	121.86	85.48								
		4 Wire Unbundled Digital Loop 2.4 Kbps - Zone3		3	UDL	UDL2X	43.08	121.86	85.48								

CATEGORY	RATE ELEMENTS	Interim	Zone	BCS	USOC	RATES($)					Svc Order Submitted Elec per LSR	Svc Order Submitted Manually per LSR	Incremental Charge - Manual Svc Order vs. Electronic-1st	Incremental Charge - Manual Svc Order vs. Electronic-Add'l	Incremental Charge - Manual Svc Order vs. Electronic-Disc 1st	Incremental Charge - Manual Svc Order vs. Electronic-Disc Add'l
						Rec	Nonrecurring		Nonrecurring Disconnect		OSS Rates($)					
							First	Add'l	First	Add'l	SOMEC	SOMAN	SOMAN	SOMAN	SOMAN	SOMAN
	4 Wire Unbundled Digital Loop 4.8 Kbps -Zone 1		1	UDL	UDL4X	21.98	121.86	85.48								
	4 Wire Unbundled Digital Loop 4.8 Kbps - Zone 2		2	UDL	UDL4X	27.58	121.86	85.48								
	4 Wire Unbundled Digital Loop 4.8 Kbps - Zone 3		3	UDL	UDL4X	43.08	121.86	85.48								
	4 Wire Unbundled Digital Loop 9.6 Kbps - Zone 1		1	UDL	UDL9X	21.98	121.86	85.48								
	5 Wire Unbundled Digital Loop 9.6 Kbps - Zone 2		2	UDL	UDL9X	27.58	121.86	85.48								
	6 Wire Unbundled Digital Loop 9.6 Kbps - Zone 3		3	UDL	UDL9X	43.08	121.86	85.48								
	4 Wire Unbundled Digital 19.2 Kbps - Zone 1		1	UDL	UDL19	21.98	121.86	85.48								
	4 Wire Unbundled Digital 19.2 Kbps - Zone 2		2	UDL	UDL19	27.58	121.86	85.48								
	4 Wire Unbundled Digital 19.2 Kbps - Zone 3		3	UDL	UDL19	43.08	121.86	85.48								
	4 Wire Unbundled Digital Loop 56 Kbps - Zone 1		1	UDL	UDL56	21.98	121.86	85.48								
	4 Wire Unbundled Digital Loop 56 Kbps - Zone 2		2	UDL	UDL56	27.58	121.86	85.48								
	4 Wire Unbundled Digital Loop 56 Kbps - Zone 3		3	UDL	UDL56	43.08	121.86	85.48								
	4 Wire Unbundled Digital Loop 64 Kbps - Zone 1		1	UDL	UDL64	21.98	121.86	85.48								
	4 Wire Unbundled Digital Loop 64 Kbps - Zone 2		2	UDL	UDL64	27.58	121.86	85.48								
	4 Wire Unbundled Digital Loop 64 Kbps - Zone 3		3	UDL	UDL64	43.08	121.86	85.48								
	Switch-As-Is Conversion rate per UNE Loop, Single LSR, (per DS0)			UDL	URESL		25.03	3.53								
	Switch-As-Is Conversion rate per UNE Loop, Spreadsheet, (per DS0)			UDL	URESP		26.52	5.02								
	CLEC to CLEC Conversion Charge without outside dispatch			UDL	UREWO		101.86	49.62								
2-WIRE Unbundled COPPER LOOP																
	2-Wire Unbundled Copper Loop-Designed including manual service inquiry & facility reservation - Zone 1		1	UCL	UCLPB	10.14	116.18	67.46								
	2-Wire Unbundled Copper Loop-Designed including manual service inquiry & facility reservation - Zone 2		2	UCL	UCLPB	11.59	116.18	67.46								
	2 Wire Unbundled Copper Loop-Designed including manual service inquiry & facility reservation - Zone 3		3	UCL	UCLPB	12.28	116.18	67.46								
	2-Wire Unbundled Copper Loop-Designed without manual service inquiry and facility reservation - Zone 1		1	UCL	UCLPW	10.14	91.92	55.12								
	2-Wire Unbundled Copper Loop-Designed without manual service inquiry and facility reservation - Zone 2		2	UCL	UCLPW	11.59	91.92	55.12								
	2-Wire Unbundled Copper Loop-Designed without manual service inquiry and facility reservation - Zone 3		3	UCL	UCLPW	12.28	91.92	55.12								
	Order Coordination for Unbundled Copper Loops (per loop)			UCL	UCLMC		61.38	61.38								
	CLEC to CLEC Conversion Charge without outside dispatch (UCL-Des)			UCL	UREWO		89.06	34.45								
4-WIRE COPPER LOOP																
	4-Wire Copper Loop including manual service inquiry and facility reservation - Zone 1		1	UCL	UCL4S	13.10	139.69	90.96								
	4-Wire Copper Loop including manual service inquiry and facility reservation - Zone 2		2	UCL	UCL4S	15.17	139.69	90.96								
	4-Wire Copper Loop including manual service inquiry and facility reservation - Zone 3		3	UCL	UCL4S	17.03	139.69	90.96								
	4-Wire Copper Loop without manual service inquiry and facility reservation - Zone 1		1	UCL	UCL4W	13.10	115.43	78.63								
	4-Wire Copper Loop without manual service inquiry and facility reservation - Zone 2		2	UCL	UCL4W	15.17	115.43	78.63								
	4-Wire Copper Loop without manual service inquiry and facility reservation - Zone 3		3	UCL	UCL4W	17.03	115.43	78.63								
	Order Coordination for Unbundled Copper Loops (per loop)			UCL	UCLMC		61.38	61.38								
	CLEC to CLEC Conversion Charge without outside dispatch (UCL-Des)			UCL	UREWO		89.06	34.45								
	Order Coordination for Specified Conversion Time (per LSR)			UEA, UDN, UAL, UHL, UDL, USL	OCOSL		17.56									
Rearrangements																
	EEL to UNE-L Retermination, per 2 Wire Unbundled Voice Loop-SL2			UEA	UREEL		87.49	36.26								
	EEL to UNE-L Retermination, per 4 Wire Unbundled Voice Loop			UEA	UREEL		87.49	36.26								

CATEGORY	RATE ELEMENTS	Interim	Zone	BCS	USOC	RATES($)					Svc Order Submitted Elec per LSR	Svc Order Submitted Manually per LSR	Incremental Charge - Manual Svc Order vs. Electronic-1st	Incremental Charge - Manual Svc Order vs. Electronic-Add'l	Incremental Charge - Manual Svc Order vs. Electronic-Disc 1st	Incremental Charge - Manual Svc Order vs. Electronic-Disc Add'l
						Rec	Nonrecurring		Nonrecurring Disconnect		OSS Rates($)					
							First	Add'l	First	Add'l	SOMEC	SOMAN	SOMAN	SOMAN	SOMAN	SOMAN
	EEL to UNE-L Retermination, per 2 Wire ISDN Loop			UDN	UREEL		91.39	44.04								
	EEL to UNE-L Retermination, per 4 Wire Unbundled Digital Loop			UDL	UREEL		101.86	49.62								
	EEL to UNE-L Retermination, per 4 Wire Unbundled DS1 Loop			USL	UREEL		100.82	42.93								
UNE LOOP COMMINGLING																
2-WIRE ANALOG VOICE GRADE LOOP - COMMINGLING																
	2-Wire Analog Voice Grade Loop - Service Level 2 w/Loop or Ground Start Signaling - Zone 1		1	NTCVG	UEAL2	11.96	102.10	65.72								
	2-Wire Analog Voice Grade Loop - Service Level 2 w/Loop or Ground Start Signaling - Zone 2		2	NTCVG	UEAL2	17.36	102.10	65.72								
	2-Wire Analog Voice Grade Loop - Service Level 2 w/Loop or Ground Start Signaling - Zone 3		3	NTCVG	UEAL2	25.23	102.10	65.72								
	2-Wire Analog Voice Grade Loop - Service Level 2 w/Reverse Battery Signaling - Zone 1		1	NTCVG	UEAR2	11.96	102.10	65.72								
	2-Wire Analog Voice Grade Loop - Service Level 2 w/Reverse Battery Signaling - Zone 2		2	NTCVG	UEAR2	17.36	102.10	65.72								
	2-Wire Analog Voice Grade Loop - Service Level 2 w/Reverse Battery Signaling - Zone 3		3	NTCVG	UEAR2	25.23	102.10	65.72								
	Switch-As-Is Conversion rate per UNE Loop, Single LSR, (per DS0)			NTCVG	URESL		25.03	3.53								
	Switch-As-Is Conversion rate per UNE Loop, Spreadsheet, (per DS0)			NTCVG	URESP		26.52	5.02								
	CLEC to CLEC Conversion Charge without outside dispatch			NTCVG	UREWO		87.49	36.26								
	Loop Tagging - Service Level 2 (SL2)			NTCVG	URETL		11.20	1.10								
4-WIRE ANALOG VOICE GRADE LOOP -COMMINGLING																
	4-Wire Analog Voice Grade Loop - Zone 1		1	NTCVG	UEAL4	19.52	127.40	91.02								
	4-Wire Analog Voice Grade Loop - Zone 2		2	NTCVG	UEAL4	24.74	127.40	91.02								
	4-Wire Analog Voice Grade Loop - Zone 3		3	NTCVG	UEAL4	46.11	127.40	91.02								
	Switch-As-Is Conversion rate per UNE Loop, Single LSR, (per DS0)			NTCVG	URESL		25.03	3.53								
	Switch-As-Is Conversion rate per UNE Loop, Spreadsheet, (per DS0)			NTCVG	URESP		26.52	5.02								
	CLEC to CLEC Conversion Charge without outside dispatch			NTCVG	UREWO		87.49	36.26								
4-WIRE DS1 DIGITAL LOOP																
	4-Wire DS1 Digital Loop - Zone 1		1	NTCD1	USLXX	63.62	245.16	152.98								
	4-Wire DS1 Digital Loop - Zone 2		2	NTCD1	USLXX	104.40	245.16	152.98								
	4-Wire DS1 Digital Loop - Zone 3		3	NTCD1	USLXX	210.22	245.16	152.98								
	Switch-As-Is Conversion rate per UNE Loop, Single LSR, (per DS1)			NTCD1	URESL		25.03	3.53								
	Switch-As-Is Conversion rate per UNE Loop, Spreadsheet, (per DS1)			NTCD1	URESP		26.52	5.02								
	CLEC to CLEC Conversion Charge without outside dispatch			NTCD1	UREWO		100.82	42.93								
4-WIRE 19.2, 56 OR 64 KBPS DIGITAL GRADE LOOP																
	4 Wire Unbundled Digital Loop 2.4 Kbps - Zone 1		1	NTCUD	UDL2X	21.98	121.86	85.48								
	4 Wire Unbundled Digital Loop 2.4 Kbps - Zone 2		2	NTCUD	UDL2X	27.58	121.86	85.48								
	4 Wire Unbundled Digital Loop 2.4 Kbps - Zone3		3	NTCUD	UDL2X	43.08	121.86	85.48								
	4 Wire Unbundled Digital Loop 4.8 Kbps -Zone 1		1	NTCUD	UDL4X	21.98	121.86	85.48								
	4 Wire Unbundled Digital Loop 4.8 Kbps - Zone 2		2	NTCUD	UDL4X	27.58	121.86	85.48								
	4 Wire Unbundled Digital Loop 4.8 Kbps - Zone 3		3	NTCUD	UDL4X	43.08	121.86	85.48								
	4 Wire Unbundled Digital Loop 9.6 Kbps - Zone 1		1	NTCUD	UDL9X	21.98	121.86	85.48								
	5 Wire Unbundled Digital Loop 9.6 Kbps - Zone 2		2	NTCUD	UDL9X	27.58	121.86	85.48								
	6 Wire Unbundled Digital Loop 9.6 Kbps - Zone 3		3	NTCUD	UDL9X	43.08	121.86	85.48								
	4 Wire Unbundled Digital 19.2 Kbps - Zone 1		1	NTCUD	UDL19	21.98	121.86	85.48								
	4 Wire Unbundled Digital 19.2 Kbps - Zone 2		2	NTCUD	UDL19	27.58	121.86	85.48								
	4 Wire Unbundled Digital 19.2 Kbps - Zone 3		3	NTCUD	UDL19	43.08	121.86	85.48								
	4 Wire Unbundled Digital Loop 56 Kbps - Zone 1		1	NTCUD	UDL56	21.98	121.86	85.48								
	4 Wire Unbundled Digital Loop 56 Kbps - Zone 2		2	NTCUD	UDL56	27.58	121.86	85.48								
	4 Wire Unbundled Digital Loop 56 Kbps - Zone 3		3	NTCUD	UDL56	43.08	121.86	85.48								
	4 Wire Unbundled Digital Loop 64 Kbps - Zone 1		1	NTCUD	UDL64	21.98	121.86	85.48								

CATEGORY		RATE ELEMENTS	Interim	Zone	BCS	USOC	RATES($)					Svc Order Submitted Elec per LSR	Svc Order Submitted Manually per LSR	Incremental Charge - Manual Svc Order vs. Electronic-1st	Incremental Charge - Manual Svc Order vs. Electronic-Add'l	Incremental Charge - Manual Svc Order vs. Electronic-Disc 1st	Incremental Charge - Manual Svc Order vs. Electronic-Disc Add'l
							Rec	Nonrecurring		Nonrecurring Disconnect		OSS Rates($)					
								First	Add'l	First	Add'l	SOMEC	SOMAN	SOMAN	SOMAN	SOMAN	SOMAN
		4 Wire Unbundled Digital Loop 64 Kbps - Zone 2		2	NTCUD	UDL64	27.58	121.86	85.48								
		4 Wire Unbundled Digital Loop 64 Kbps - Zone 3		3	NTCUD	UDL64	43.08	121.86	85.48								
		Switch-As-Is Conversion rate per UNE Loop, Single LSR, (per DS0)			NTCUD	URESL		25.03	3.53								
		Switch-As-Is Conversion rate per UNE Loop, Spreadsheet, (per DS0)			NTCUD	URESP		26.52	5.02								
		CLEC to CLEC Conversion Charge without outside dispatch			NTCUD	UREWO		101.86	49.62								
		Order Coordination for Specified Conversion Time (per LSR)			NTCVG, NTCUD, NTCD1	OCOSL		17.56									
LOOP MODIFICATION																	
		Unbundled Loop Modification, Removal of Load Coils - 2 Wire pair less than or equal to 18k ft, per Unbundled Loop			UAL, UHL, UCL, UEQ, ULS, UEA, UEANL, UEPSR, UEPSB	ULM2L		0.00	0.00								
		Unbundled Loop Modification, Removal of Load Coils - 2 wire greater than 18k ft			UCL, ULS, UEQ	ULM2G		0.00	0.00								
		Unbundled Loop Modification Removal of Load Coils - 4 Wire less than or equal to 18K ft, per Unbundled Loop			UHL, UCL, UEA	ULM4L		0.00	0.00								
		Unbundled Loop Modification Removal of Load Coils - 4 Wire pair greater than 18k ft			UCL	ULM4G		0.00	0.00								
		Unbundled Loop Modification Removal of Bridged Tap Removal, per unbundled loop			UAL, UHL, UCL, UEQ, ULS, UEA, UEANL, UEPSR, UEPSB	ULMBT		12.15	12.15								
SUB-LOOPS																	
	Sub-Loop Distribution																
		Sub-Loop - Per Cross Box Location - CLEC Feeder Facility Set-Up			UEANL, UEF	USBSA		144.09									
		Sub-Loop - Per Cross Box Location - Per 25 Pair Panel Set-Up			UEANL, UEF	USBSB		10.99	10.99								
		Sub-Loop - Per Building Equipment Room - CLEC Feeder Facility Set-Up			UEANL	USBSC		86.16									
		Sub-Loop - Per Building Equipment Room - Per 25 Pair Panel Set-Up			UEANL	USBSD		27.13	27.13								
		Sub-Loop Distribution Per 2-Wire Analog Voice Grade Loop - Zone 1		1	UEANL	USBN2	6.70	63.89	30.06								
		Sub-Loop Distribution Per 2-Wire Analog Voice Grade Loop - Zone 2		2	UEANL	USBN2	9.93	63.89	30.06								
		Sub-Loop Distribution Per 2-Wire Analog Voice Grade Loop - Zone 3		3	UEANL	USBN2	12.79	63.89	30.06								
		Order Coordination for Unbundled Sub-Loops, per sub-loop pair			UEANL	USBMC		7.92	7.92								
		Sub-Loop Distribution Per 4-Wire Analog Voice Grade Loop - Zone 1		1	UEANL	USBN4	10.81	76.75	42.92								
		Sub-Loop Distribution Per 4-Wire Analog Voice Grade Loop - Zone 2		2	UEANL	USBN4	14.16	76.75	42.92								
		Sub-Loop Distribution Per 4-Wire Analog Voice Grade Loop - Zone 3		3	UEANL	USBN4	24.67	76.75	42.92								
		Order Coordination for Unbundled Sub-Loops, per sub-loop pair			UEANL	USBMC		7.92	7.92								
		Sub-Loop 2-Wire Intrabuilding Network Cable (INC)			UEANL	USBR2	2.34	51.48	17.65								
		Order Coordination for Unbundled Sub-Loops, per sub-loop pair			UEANL	USBMC		7.92	7.92								
		Sub-Loop 4-Wire Intrabuilding Network Cable (INC)			UEANL	USBR4	4.18	57.54	23.71								
		Order Coordination for Unbundled Sub-Loops, per sub-loop pair			UEANL	USBMC		7.92	7.92								
	Service	Loop Testing - Basic 1st Half Hour			UEANL	URET1		33.17	0.00								
		Loop Testing - Basic Additional Half Hour			UEANL	URETA		19.28	19.28								
		2 Wire Copper Unbundled Sub-Loop Distribution - Zone 1		1	UEF	UCS2X	5.43	63.89	30.06								

CATEGORY	RATE ELEMENTS	Interim	Zone	BCS	USOC	RATES($) Rec	Nonrecurring First	Nonrecurring Add'l	Nonrecurring Disconnect First	Nonrecurring Disconnect Add'l	Svc Order Submitted Elec per LSR	Svc Order Submitted Manually per LSR	Incremental Charge - Manual Svc Order vs. Electronic-1st	Incremental Charge - Manual Svc Order vs. Electronic-Add'l	Incremental Charge - Manual Svc Order vs. Electronic-Disc 1st	Incremental Charge - Manual Svc Order vs. Electronic-Disc Add'l
											OSS Rates($)					
											SOMEC	SOMAN	SOMAN	SOMAN	SOMAN	SOMAN
	2 Wire Copper Unbundled Sub-Loop Distribution - Zone 2		2	UEF	UCS2X	8.04	63.89	30.06								
	2 Wire Copper Unbundled Sub-Loop Distribution - Zone 3		3	UEF	UCS2X	9.79	63.89	30.06								
	Order Coordination for Unbundled Sub-Loops, per sub-loop pair			UEF	USBMC		7.92	7.92								
	4 Wire Copper Unbundled Sub-Loop Distribution - Zone 1		1	UEF	UCS4X	6.34	76.75	42.92								
	4 Wire Copper Unbundled Sub-Loop Distribution - Zone 2		2	UEF	UCS4X	9.62	76.75	42.92								
	4 Wire Copper Unbundled Sub-Loop Distribution - Zone 3		3	UEF	UCS4X	13.04	76.75	42.92								
	Order Coordination for Unbundled Sub-Loops, per sub-loop pair			UEF	USBMC		7.92	7.92								
	Loop Tagging Service Level 1, Unbundled Copper Loop, Non-Designed and Distribution Subloops			UEF, UEANL	URETL		8.93	0.88								
	Loop Testing - Basic 1st Half Hour			UEF	URET1		33.17	0.00								
	Loop Testing - Basic Additional Half Hour			UEF	URETA		19.28	19.28								
Unbundled Sub-Loop Modification																
	Unbundled Sub-Loop Modification - 2-W Copper Dist Load Coil/Equip Removal per 2-W PR			UEF	ULM2X		0.00	0.00								
	Unbundled Sub-loop Modification - 4-W Copper Dist Load Coil/Equip Removal per 4-W PR			UEF	ULM4X		0.00	0.00								
	Unbundled Loop Modification, Removal of Bridge Tap, per unbundled loop			UEF	ULMBT		224.55	4.29								
Unbundled Network Terminating Wire (UNTW)																
	Unbundled Network Terminating Wire (UNTW) per Pair			UENTW	UENPP	0.51	14.72	14.72								
Network Interface Device (NID)																
	Network Interface Device (NID) - 1-2 lines			UENTW	UND12		86.37	56.69								
	Network Interface Device (NID) - 1-6 lines			UENTW	UND16		127.93	98.21								
	Network Interface Device Cross Connect - 2 W			UENTW	UNDC2		5.73	5.73								
	Network Interface Device Cross Connect - 4W			UENTW	UNDC4		5.73	5.73								
UNE OTHER, PROVISIONING ONLY - NO RATE																
	Unbundled Contact Name, Provisioning Only - no rate			UAL, UCL, UDC, UDL, UDN, UEA, UHL, UEANL, UEF, UEQ, UENTW, NTCVG, NTCUD, NTCD1, USL	UNECN	0.00	0.00									
	Unbundled DS1 Loop - Superframe Format Option - no rate			USL, NTCD1	CCOSF		0.00									
	Unbundled DS1 Loop - Expanded Superframe Format option - no rate			USL, NTCD1	CCOEF		0.00									
	NID - Dispatch and Service Order for NID installation			UENTW	UNDBX	0.00	0.00									
	UNTW Circuit Establishment, Provisioning Only - No Rate			UENTW	UENCE	0.00	0.00									
LOOP MAKE-UP																
	Loop Makeup - Preordering Without Reservation, per working or spare facility queried (Manual).			UMK	UMKLW		23.29	23.29								
	Loop Makeup - Preordering With Reservation, per spare facility queried (Manual).			UMK	UMKLP		24.70	24.70								
	Loop Makeup--With or Without Reservation, per working or spare facility queried (Mechanized)			UMK	UMKMQ		0.19	0.19								
LINE SPLITTING																
END USER ORDERING-CENTRAL OFFICE BASED																
	Line Splitting - per line activation DLEC owned splitter			UEPSR UEPSB	UREOS	0.61	15.53	7.79								
	Line Splitting - per line activation BST owned - physical			UEPSR UEPSB	UREBP	0.6409	17.97	10.29								
	Line Splitting - per line activation BST owned - virtual			UEPSR UEPSB	UREBV	0.6325	17.87	10.29								
END USER ORDERING - REMOTE SITE LINE SPLITTING																
UNBUNDLED EXCHANGE ACCESS LOOP																
2-WIRE ANALOG VOICE GRADE LOOP																
	2 Wire Analog Voice Grade Loop-Service Level 1-Line Splitting-Zone 1		1	UEPSR UEPSB	UEALS	10.82	36.54	16.87	0.00	0.00						
	2 Wire Analog Voice Grade Loop-Service Level 1-Line Splitting-Zone 1		1	UEPSR UEPSB	UEABS	10.82	36.54	16.87	0.00	0.00						

CATEGORY	RATE ELEMENTS	Interim	Zone	BCS	USOC	RATES($)					Svc Order Submitted Elec per LSR	Svc Order Submitted Manually per LSR	Incremental Charge - Manual Svc Order vs. Electronic-1st	Incremental Charge - Manual Svc Order vs. Electronic-Add'l	Incremental Charge - Manual Svc Order vs. Electronic-Disc 1st	Incremental Charge - Manual Svc Order vs. Electronic-Disc Add'l
						Rec	Nonrecurring		Nonrecurring Disconnect		OSS Rates($)					
							First	Add'l	First	Add'l	SOMEC	SOMAN	SOMAN	SOMAN	SOMAN	SOMAN
	2 Wire Analog Voice Grade Loop- Service Level 1-Line Splitting-Zone 2		2	UEPSR UEPSB	UEALS	16.21	36.54	16.87	0.00	0.00						
	2 Wire Analog Voice Grade Loop- Service Level 1-Line Splitting-Zone 2		2	UEPSR UEPSB	UEABS	16.21	36.54	16.87	0.00	0.00						
	2 Wire Analog Voice Grade Loop-Service Level 1-Line Splitting-Zone 3		3	UEPSR UEPSB	UEALS	24.08	36.54	16.87	0.00	0.00						
	2 Wire Analog Voice Grade Loop-Service Level 1-Line Splitting-Zone 3		3	UEPSR UEPSB	UEABS	24.08	36.54	16.87	0.00	0.00						
	PHYSICAL COLLOCATION															
	Physical Collocation-2 Wire Cross Connects (Loop) for Line Splitting			UEPSR UEPSB	PE1LS	0.0309	19.77	14.95	0.00	0.00						
	VIRTUAL COLLOCATION															
	Virtual Collocation-2 Wire Cross Connects (Loop) for Line Splitting			UEPSR UEPSB	VE1LS	0.0287	33.96	32.08	0.00	0.00						
MAINTENANCE OF SERVICE																
	NOTE: The Expedite charge will be maintained commensurate with BellSouth's FCC No.1 Tariff, Section 13.3.1 as applicable.															
	No Trouble Found - per 1/2 hour increments - Basic						80.00	55.00								
	No Trouble Found - per 1/2 hour increments - Overtime						90.00	65.00								
	No Trouble Found - per 1/2 hour increments - Premium						100.00	75.00								
UNBUNDLED DEDICATED TRANSPORT																
	INTEROFFICE CHANNEL - DEDICATED TRANSPORT															
	Interoffice Channel - 2-Wire Voice Grade - per mile			U1TVX	1L5XX	0.0095										
	Interoffice Channel - 2-Wire Voice Grade - Facility Termination			U1TVX	U1TV2	12.12	39.36	26.62								
	Interoffice Channel - 2-Wire Voice Grade Rev Bat. - per mile			U1TVX	1L5XX	0.0095										
	Interoffice Channel - 2-Wire VG Rev Bat. - Facility Termination			U1TVX	U1TR2	12.12	39.36	26.62								
	Interoffice Channel - 4-Wire Voice Grade - per mile			U1TVX	1L5XX	0.0095										
	Interoffice Channel - 4- Wire Voice Grade - Facility Termination			U1TVX	U1TV4	10.19	39.36	26.62								
	Interoffice Channel - 56 kbps - per mile			U1TDX	1L5XX	0.0095										
	Interoffice Channel - 56 kbps - Facility Termination			U1TDX	U1TD5	7.47	39.37	26.62								
	Interoffice Channel - 64 kbps - per mile			U1TDX	1L5XX	0.0095										
	Interoffice Channel - 64 kbps - Facility Termination			U1TDX	U1TD6	7.47	39.37	26.62								
	Interoffice Channel - DS1 - per mile			U1TD1	1L5XX	0.1938										
	Interoffice Channel - DS1 - Facility Termination			U1TD1	U1TF1	31.06	86.69	79.44								
	Interoffice Channel - DS3 - per mile			U1TD3	1L5XX	4.44										
	Interoffice Channel - DS3 - Facility Termination			U1TD3	U1TF3	329.91	270.69	158.05								
	Interoffice Channel - STS-1 - per mile			U1TS1	1L5XX	4.44										
	Interoffice Channel - STS-1 - Facility Termination			U1TS1	U1TFS	339.20	270.69	158.05								
HIGH CAPACITY UNBUNDLED LOCAL LOOP																
	DS-3/STS-1 UNBUNDLED LOCAL LOOP - Stand Alone															
	DS3 Unbundled Local Loop - per mile			UE3	1L5ND	12.95										
	DS3 Unbundled Local Loop - Facility Termination			UE3	UE3PX	229.90	438.46	256.30								
	STS-1Unbundled Local Loop - per mile			UDLSX	1L5ND	12.95										
	STS-1 Unbundled Local Loop - Facility Termination			UDLSX	UDLS1	257.82	438.46	256.30								
	UNBUNDLED DARK FIBER															
	Dark Fiber - Interoffice Transport, Per Four Fiber Strands, Per Route Mile Or Fraction Thereof			UDF, UDFCX	1L5DF	24.77										
	Dark Fiber - Interoffice Transport, Per Four Fiber Strands, Per Route Mile Or Fraction Thereof			UDF, UDFCX	UDF14		620.60	133.88								
ENHANCED EXTENDED LINK (EELs)																
	Network Elements Used in Combinations															
	2-Wire VG Loop (SL2) in Combination - Zone 1		1	UNCVX	UEAL2	11.96	385.26	72.08								
	2-Wire VG Loop (SL2) in Combination - Zone 2		2	UNCVX	UEAL2	17.36	385.26	72.08								
	2-Wire VG Loop (SL2) in Combination - Zone 3		3	UNCVX	UEAL2	25.23	385.26	72.08								
	4-Wire Analog Voice Grade Loop in Combination - Zone 1		1	UNCVX	UEAL4	19.52	385.26	72.08								
	4-Wire Analog Voice Grade Loop in Combination - Zone 2		2	UNCVX	UEAL4	24.74	385.26	72.08								
	4-Wire Analog Voice Grade Loop in Combination - Zone 3		3	UNCVX	UEAL4	46.11	385.26	72.08								
	2-Wire ISDN Loop in Combination - Zone 1		1	UNCNX	U1L2X	19.78	385.26	72.08								

UNBUNDLED NETWORK ELEMENTS - North Carolina														Attachment: 2 Exh A			
CATEGORY		RATE ELEMENTS	Interim	Zone	BCS	USOC	RATES($)					Svc Order Submitted Elec per LSR	Svc Order Submitted Manually per LSR	Incremental Charge - Manual Svc Order vs. Electronic-1st	Incremental Charge - Manual Svc Order vs. Electronic-Add'l	Incremental Charge - Manual Svc Order vs. Electronic-Disc 1st	Incremental Charge - Manual Svc Order vs. Electronic-Disc Add'l
							Rec	Nonrecurring		Nonrecurring Disconnect		OSS Rates($)					
								First	Add'l	First	Add'l	SOMEC	SOMAN	SOMAN	SOMAN	SOMAN	SOMAN
		2-Wire ISDN Loop in Combination - Zone 2		2	UNCNX	U1L2X	26.16	385.26	72.08								
		2-Wire ISDN Loop in Combination - Zone 3		3	UNCNX	U1L2X	35.37	385.26	72.08								
		4-Wire 56Kbps Digital Grade Loop in Combination - Zone 1		1	UNCDX	UDL56	21.98	385.26	72.08								
		4-Wire 56Kbps Digital Grade Loop in Combination - Zone 2		2	UNCDX	UDL56	27.58	385.26	72.08								
		4-Wire 56Kbps Digital Grade Loop in Combination - Zone 3		3	UNCDX	UDL56	43.08	385.26	72.08								
		4-Wire 64Kbps Digital Grade Loop in Combination - Zone 1		1	UNCDX	UDL64	21.98	385.26	72.08								
		4-Wire 64Kbps Digital Grade Loop in Combination - Zone 2		2	UNCDX	UDL64	27.58	385.26	72.08								
		4-Wire 64Kbps Digital Grade Loop in Combination - Zone 3		3	UNCDX	UDL64	43.08	385.26	72.08								
		4-Wire DS1 Digital Loop in Combination - Zone 1		1	UNC1X	USLXX	63.62	412.03	139.55								
		4-Wire DS1 Digital Loop in Combination - Zone 2		2	UNC1X	USLXX	104.40	412.03	139.55								
		4-Wire DS1 Digital Loop in Combination - Zone 3		3	UNC1X	USLXX	210.22	412.03	139.55								
		DS3 Local Loop in combination - per mile			UNC3X	1L5ND	12.95										
		DS3 Local Loop in combination - Facility Termination			UNC3X	UE3PX	229.90	3,073.55	1,245.84								
		STS-1 Local Loop in combination - per mile			UNCSX	1L5ND	12.95										
		STS-1 Local Loop in combination - Facility Termination			UNCSX	UDLS1	257.82	3,073.55	1,245.84								
		Interoffice Channel in combination - 2-wire VG - per mile			UNCVX	1L5XX	0.0095										
		Interoffice Channel in combination - 2-wire VG - Facility Termination			UNCVX	U1TV2	12.12	131.81	78.34								
		Interoffice Channel in combination - 4-wire VG - per mile			UNCVX	1L5XX	0.0095										
		Interoffice Channel in combination - 4-wire VG - Facility Termination			UNCVX	U1TV4	10.19	131.81	78.34								
		Interoffice Channel in combination - 4-wire 56 kbps - per mile			UNCDX	1L5XX	0.0095										
		Interoffice Channel in combination - 4-wire 56 kbps - Facility Termination			UNCDX	U1TD5	7.47	131.81	78.34								
		Interoffice Channel in combination - 4-wire 64 kbps - per mile			UNCDX	1L5XX	0.0095										
		Interoffice Channel in combination - 4-wire 64 kbps - Facility Termination			UNCDX	U1TD6	7.47	131.81	78.34								
		Interoffice Channel in combination - DS1 - per mile			UNC1X	1L5XX	0.1938										
		Interoffice Channel in combination - DS1 Facility Termination			UNC1X	U1TF1	31.06	234.02	162.52								
		Interoffice Channel in combination - DS3 - per mile			UNC3X	1L5XX	4.44										
		Interoffice Channel in combination - DS3 - Facility Termination			UNC3X	U1TF3	329.91	802.81	146.02								
		Interoffice Channel in combination - STS-1 - per mile			UNCSX	1L5XX	4.44										
		Interoffice Channel in combination - STS-1 Facility Termination			UNCSX	U1TFS	339.20	802.81	146.02								
ADDITIONAL NETWORK ELEMENTS																	
	Optional Features & Functions:																
		Clear Channel Capability Extended Frame Option - per DS1	I		U1TD1, ULDD1,UNC1X	CCOEF		0.00									
		Clear Channel Capability Super FrameOption - per DS1	I		U1TD1, ULDD1,UNC1X	CCOSF		0.00									
		Clear Channel Capability (SF/ESF) Option - Subsequent Activity - per DS1	I		ULDD1, U1TD1, UNC1X, USL	NRCCC		184.76	23.80	1.99	0.78						
		C-bit Parity Option - Subsequent Activity - per DS3	i		U1TD3, ULDD3, UE3, UNC3X	NRCC3		218.92	7.66	0.7576	0.00						
		DS1/DS0 Channel System			UNC1X	MQ1	70.84	170.57									
		DS3/DS1Channel System			UNC3X	MQ3	84.32										
		Voice Grade COCI in combination			UNCVX	1D1VG	0.4329	54.14	17.51								
		Voice Grade COCI - for Local Loop			UEA	1D1VG	0.4329	54.14	17.51								
		Voice Grade COCI - for connection to a channelized DS1 Local Channel in the same SWC as collocation			U1TUC	1D1VG	0.4329	54.14	17.51								
		OCU-DP COCI (2.4-64kbs) in combination			UNCDX	1D1DD	0.9199	54.14	17.51								
		OCU-DP COCI (2.4-64kbs) - for Local Loop			UDL	1D1DD	0.9199	54.14	17.51								
		OCU-DP COCI (2.4-64kbs) - for connection to a channelized DS1 Local Channel in the same SWC as collocation			U1TUD	1D1DD	0.9199	54.14	17.51								
		2-wire ISDN COCI (BRITE) in combination			UNCNX	UC1CA	1.53	54.14	17.51								
		2-wire ISDN COCI (BRITE) - for Local Loop			UDN	UC1CA	1.53	54.14	17.51								
		2-wire ISDN COCI (BRITE) - for connection to a channelized DS1 Local Channel in the same SWC as collocation			U1TUB	UC1CA	1.53	54.14	17.51								
		DS1 COCI in combination			UNC1X	UC1D1	8.43	54.14	17.51								
		DS1 COCI - for Local Loop			USL	UC1D1	8.43	54.14	17.51								

CATEGORY	RATE ELEMENTS	Interim	Zone	BCS	USOC	RATES($)					Svc Order Submitted Elec per LSR	Svc Order Submitted Manually per LSR	Incremental Charge - Manual Svc Order vs. Electronic-1st	Incremental Charge - Manual Svc Order vs. Electronic-Add'l	Incremental Charge - Manual Svc Order vs. Electronic-Disc 1st	Incremental Charge - Manual Svc Order vs. Electronic-Disc Add'l
						Rec	Nonrecurring		Nonrecurring Disconnect		OSS Rates($)					
							First	Add'l	First	Add'l	SOMEC	SOMAN	SOMAN	SOMAN	SOMAN	SOMAN
	DS1 COCI - for connection to a channelized DS1 Local Channel in the same SWC as collocation			U1TUA	UC1D1	8.43	54.14	17.51								
	DS1 COCI - for Interoffice Channel			U1TD1	UC1D1	8.43	54.14	17.51								
	DS1 COCI - for Local Channel			ULDD1	UC1D1	8.43	54.14	17.51								
	Wholesale - UNE, Switch-As-Is Conversion Charge			UNCVX, UNCDX, UNC1X, UNC3X, UNCSX, UDFCX, XDH1X, HFQC6, XDD2X, XDV6X, XDDFX, XDD4X, HFRST	UNCCC		38.39	17.64								
	Unbundled Misc Rate Element, SNE SAI, Single Network Element - Switch As Is Non-recurring Charge, per circuit (LSR)			U1TVX, U1TDX, U1TD1, U1TD3, U1TS1, UDF, UE3	URESL		36.90	16.15								
	Unbundled Misc Rate Element, SNE SAI, Single Network Element - Switch As Is Non-recurring Charge, incremental charge per circuit on a spreadsheet			U1TVX, U1TDX, U1TD1, U1TD3, U1TS1, UDF, UE3	URESP		1.49	1.49								
Access to DCS - Customer Reconfiguration (FlexServ)																
	Customer Reconfiguration Establishment						1.43	1.43								
	DS1 DCS Termination with DS0 Switching					21.64	24.81	19.09								
	DS1 DCS Termination with DS1 Switching					7.34	17.93	12.22								
	DS3 DCS Termination with DS1 Switching					136.07	24.81	19.09								
Node (SynchroNet)																
	Node per month			UNCDX	UNCNT	16.00										
Service Rearrangements																
	NRC - Change in Facility Assignment per circuit Service Rearrangement	I		U1TVX, U1TDX, UEA, UDL, U1TUC, U1TUD, U1TUB, ULDVX, ULDDX, UNCVX, UNCDX, UNC1X	URETD		100.82	42.93								
	NRC - Change in Facility Assignment per circuit Project Management (added to CFA per circuit if project managed)	I		U1TVX, U1TDX, UEA, UDL, U1TUC, U1TUD, U1TUB, ULDVX, ULDDX, UNCVX, UNCDX, UNC1X	URETB		3.18	3.18								
	NRC - Order Coordination Specific Time - Dedicated Transport	I		UNC1X, UNC3X	OCOSR		18.89	18.89								
	UNE Reconfiguration Change Charge per Circuit	I		UNC1X	URERC		35.00	35.00								
	UNE Reconfiguration Change Charge per Circuit Project Managed	I		UNC1X	URERP		3.18	3.18								
COMMINGLING																
	Commingling Authorization			UNCVX, UNCDX, UNC1X, UNC3X, UNCSX, U1TD1, U1TD3, U1TS1, UE3, UDLSX, U1TVX, U1TDX, U1TUB, ULDVX, ULDD1, ULDD3, ULDS1	CMGAU	0.00	0.00	0.00								
Commingled (UNE part of single bandwidth circuit)																
	Commingled VG COCI			XDV2X, NTCVG	1D1VG	0.4329	54.14	17.51								
	Commingled Digital COCI			XDV6X, NTCUD	1D1DD	0.9199	54.14	17.51								
	Commingled ISDN COCI			XDD4X	UC1CA	1.53	54.14	17.51								
	Commingled 2-wire VG Interoffice Channel Facility Termination			XDV2X	U1TV2	12.12	131.81	78.34								
	Commingled 4-wire VG Interoffice Channel Facility Termination			XDV6X	U1TV4	10.19	131.81	78.34								
	Commingled 56kbps Interoffice Channel Facility Termination			XDD4X	U1TD5	7.47	131.81	78.34								
	Commingled 64kbps Interoffice Channel Facility Termination			XDD4X	U1TD6	7.47	131.81	78.34								

UNBUNDLED NETWORK ELEMENTS - North Carolina														Attachment: 2 Exh A			
CATEGORY		RATE ELEMENTS	Interim	Zone	BCS	USOC	RATES($)					Svc Order Submitted Elec per LSR	Svc Order Submitted Manually per LSR	Incremental Charge - Manual Svc Order vs. Electronic-1st	Incremental Charge - Manual Svc Order vs. Electronic-Add'l	Incremental Charge - Manual Svc Order vs. Electronic-Disc 1st	Incremental Charge - Manual Svc Order vs. Electronic-Disc Add'l
							Rec	Nonrecurring		Nonrecurring Disconnect		OSS Rates($)					
								First	Add'l	First	Add'l	SOMEC	SOMAN	SOMAN	SOMAN	SOMAN	SOMAN
		Commingled VG/DS0 Interoffice Channel per mile			XDV2X, XDV6X, XDD4X	1L5XX	0.0095										
		Commingled 2-wire Local Loop Zone 1		1	XDV2X	UEAL2	11.96	385.26	72.08								
		Commingled 2-wire Local Loop Zone 2		2	XDV2X	UEAL2	17.36	385.26	72.08								
		Commingled 2-wire Local Loop Zone 3		3	XDV2X	UEAL2	25.23	385.26	72.08								
		Commingled 4-wire Local Loop Zone 1		1	XDV6X	UEAL4	19.52	385.26	72.08								
		Commingled 4-wire Local Loop Zone 2		2	XDV6X	UEAL4	24.74	385.26	72.08								
		Commingled 4-wire Local Loop Zone 3		3	XDV6X	UEAL4	46.11	385.26	72.08								
		Commingled 56kbps Local Loop Zone 1		1	XDD4X	UDL56	21.98	385.26	72.08								
		Commingled 56kbps Local Loop Zone 2		2	XDD4X	UDL56	27.58	385.26	72.08								
		Commingled 56kbps Local Loop Zone 3		3	XDD4X	UDL56	43.08	385.26	72.08								
		Commingled 64kbps Local Loop Zone 1		1	XDD4X	UDL64	21.98	385.26	72.08								
		Commingled 64kbps Local Loop Zone 2		2	XDD4X	UDL64	27.58	385.26	72.08								
		Commingled 64kbps Local Loop Zone 3		3	XDD4X	UDL64	43.08	385.26	72.08								
		Commingled ISDN Local Loop Zone 1		1	XDD4X	U1L2X	19.78	385.26	72.08								
		Commingled ISDN Local Loop Zone 2		2	XDD4X	U1L2X	26.16	385.26	72.08								
		Commingled ISDN Local Loop Zone 3		3	XDD4X	U1L2X	35.37	385.26	72.08								
		Commingled DS1 COCI			XDH1X, NTCD1	UC1D1	8.43	54.14	17.51								
		Commingled DS1 Interoffice Channel Facility Termination			XDH1X	U1TF1	31.06	234.02	162.52								
		Commingled DS1 Interoffice Channel per mile			XDH1X	1L5XX	0.1938										
		Commingled DS1/DS0 Channel System			XDH1X	MQ1	70.84	170.57									
		Commingled DS1 Local Loop Zone 1		1	XDH1X	USLXX	63.62	412.03	139.55								
		Commingled DS1 Local Loop Zone 2		2	XDH1X	USLXX	104.40	412.03	139.55								
		Commingled DS1 Local Loop Zone 3		3	XDH1X	USLXX	210.22	412.03	139.55								
		Commingled DS3 Local Loop Facility Termination			HFQC6	UE3PX	229.90	3,073.55	1,245.84								
		Commingled DS3/STS-1 Local Loop per mile			HFQC6, HFRST	1L5ND	12.95										
		Commingled STS-1 Local Loop Facility Termination			HFRST	UDLS1	257.82	3,073.55	1,245.84								
		Commingled DS3/DS1 Channel System			HFQC6	MQ3	84.32										
		Commingled DS3 Interoffice Channel Facility Termination			HFQC6	U1TF3	329.91	802.81	146.02								
		Commingled DS3 Interoffice Channel per mile			HFQC6	1L5XX	4.44										
		Commingled STS-1Interoffice Channel Facility Termination			HFRST	U1TFS	339.20	802.81	146.02								
		Commingled STS-1Interoffice Channel per mile			HFRST	1L5XX	4.44										
		Commingled Dark Fiber - Interoffice Transport, Per Four Fiber Strands, Per Route Mile Or Fraction Thereof			HEQDL	1L5DF	24.77										
		Commingled Dark Fiber - Interoffice Transport, Per Four Fiber Strands, Per Route Mile Or Fraction Thereof			HEQDL	UDF14		620.60	133.88								
		UNE to Commingled Conversion Tracking			XDH1X, HFQC6	CMGUN	0.00	0.00	0.00	0.00	0.00						
		SPA to Commingled Conversion Tracking			XDH1X, HFQC6	CMGSP	0.00	0.00	0.00	0.00	0.00						
LNP Query Service																	
		LNP Charge Per query					0.0007579										
		LNP Service Establishment Manual						12.16									
		LNP Service Provisioning with Point Code Establishment						576.33	294.43								
911 PBX LOCATE																	
	911 PBX LOCATE DATABASE CAPABILITY																
		Service Establishment per CLEC per End User Account			9PBDC	9PBEU		1,823.00									
		Changes to TN Range or Customer Profile			9PBDC	9PBTN		182.45									
		Per Telephone Number (Monthly)			9PBDC	9PBMM	0.07										
		Change Company (Service Provider) ID			9PBDC	9PBPC		535.57									
		PBX Locate Service Support per CLEC (Monthlt)			9PBDC	9PBMR	165.63										
		Service Order Charge			9PBDC	9PBSC		15.20									
	911 PBX LOCATE TRANSPORT COMPONENT																
	See Att 3																
	Note: Rates displaying an "I" in Interim column are interim as a result of a Commission order.																

UNBUNDLED NETWORK ELEMENTS - South Carolina														Attachment: 2 Exh A			
CATEGORY	RATE ELEMENTS	Interim	Zone	BCS	USOC	RATES($)					Svc Order Submitted Elec per LSR	Svc Order Submitted Manually per LSR	Incremental Charge - Manual Svc Order vs. Electronic-1st	Incremental Charge - Manual Svc Order vs. Electronic-Add'l	Incremental Charge - Manual Svc Order vs. Electronic-Disc 1st	Incremental Charge - Manual Svc Order vs. Electronic-Disc Add'l
						Rec	Nonrecurring		Nonrecurring Disconnect		OSS Rates($)					
							First	Add'l	First	Add'l	SOMEC	SOMAN	SOMAN	SOMAN	SOMAN	SOMAN
	The "Zone" shown in the sections for stand-alone loops or loops as part of a combination refers to Geographically Deaveraged UNE Zones. To view Geographically Deaveraged UNE Zone Designations by Central Office, refer to internet Website: http://www.interconnection.bellsouth.com/become_a_clec/html/interconnection.htm															
OPERATIONS SUPPORT SYSTEMS (OSS) - "REGIONAL RATES"																
	NOTE: (1) CLEC should contact its contract negotiator if it prefers the "state specific" OSS charges as ordered by the State Commissions. The OSS charges currently contained in this rate exhibit are the BellSouth "regional" service ordering charges. CLEC may elect either the state specific Commission ordered rates for the service ordering charges, or CLEC may elect the regional service ordering charge, however, CLEC can not obtain a mixture of the two regardless if CLEC has a interconnection contract established in each of the 9 states.															
	NOTE: (2) Any element that can be ordered electronically will be billed according to the SOMEC rate listed in this category. Please refer to BellSouth's Local Ordering Handbook (LOH) to determine if a product can be ordered electronically. For those elements that cannot be ordered electronically at present per the LOH, the listed SOMEC rate in this category reflects the charge that would be billed to a CLEC once electronic ordering capabilities come on-line for that element. Otherwise, the manual ordering charge, SOMAN, will be applied to a CLECs bill when it submits an LSR to BellSouth.															
	OSS - Electronic Service Order Charge, Per Local Service Request (LSR) - UNE Only				SOMEC		3.50	0.00	3.50	0.00						
	OSS - Manual Service Order Charge, Per Local Service Request (LSR) - UNE Only				SOMAN		15.69	0.00	1.97	0.00						
UNE SERVICE DATE ADVANCEMENT CHARGE																
	NOTE: The Expedite charge will be maintained commensurate with BellSouth's FCC No.1 Tariff, Section 5 as applicable.															
	UNE Expedite Charge per Circuit or Line Assignable USOC, per Day			UAL, UEANL, UCL, UEF, UDF, UEQ, UDL, UENTW, UDN, UEA, UHL, ULC, USL, U1T12, U1T48, U1TD1, U1TD3, U1TDX, U1TO3, U1TS1, U1TVX, UC1BC, UC1BL, UC1CC, UC1CL, UC1DC, UC1DL, UC1EC, UC1EL, UC1FC, UC1FL, UC1GC, UC1GL, UC1HC, UC1HL, UDL12, UDL48, UDLO3, UDLSX, UE3, ULD12, ULD48, ULDD1, ULDD3, ULDDX, ULDO3, ULDS1, ULDVX, UNC1X, UNC3X, UNCDX, UNCNX, UNCSX, UNCVX, UNLD1, UNLD3, UXTD1, UXTD3, UXTS1, U1TUC, U1TUD, U1TUB, U1TUA,NTCVG, NTCUD, NTCD1	SDASP		200.00									
ORDER MODIFICATION CHARGE																
	Order Modification Charge (OMC)						26.21	0.00	0.00	0.00						
	Order Modification Additional Dispatch Charge (OMCAD)						150.00	0.00	0.00	0.00						
UNBUNDLED EXCHANGE ACCESS LOOP																
	2-WIRE ANALOG VOICE GRADE LOOP															
	2-Wire Analog Voice Grade Loop - Service Level 1- Zone 1		1	UEANL	UEAL2	14.94	37.92	17.62	23.56	5.32						
	2-Wire Analog Voice Grade Loop - Service Level 1- Zone 2		2	UEANL	UEAL2	21.39	37.92	17.62	23.56	5.32						
	2-Wire Analog Voice Grade Loop - Service Level 1- Zone 3		3	UEANL	UEAL2	26.72	37.92	17.62	23.56	5.32						
	2-Wire Analog Voice Grade Loop - Service Level 1- Zone 1		1	UEANL	UEASL	14.94	37.92	17.62	23.56	5.32						
	2-Wire Analog Voice Grade Loop - Service Level 1- Zone 2		2	UEANL	UEASL	21.39	37.92	17.62	23.56	5.32						
	2-Wire Analog Voice Grade Loop - Service Level 1- Zone 3		3	UEANL	UEASL	26.72	37.92	17.62	23.56	5.32						

CATEGORY	RATE ELEMENTS	Interim	Zone	BCS	USOC	RATES($)					Svc Order Submitted Elec per LSR	Svc Order Submitted Manually per LSR	Incremental Charge - Manual Svc Order vs. Electronic-1st	Incremental Charge - Manual Svc Order vs. Electronic-Add'l	Incremental Charge - Manual Svc Order vs. Electronic-Disc 1st	Incremental Charge - Manual Svc Order vs. Electronic-Disc Add'l
						Rec	Nonrecurring		Nonrecurring Disconnect		OSS Rates($)					
							First	Add'l	First	Add'l	SOMEC	SOMAN	SOMAN	SOMAN	SOMAN	SOMAN
	Tag Loop at End User Premise			UEANL	URETL		8.95	0.88								
	Loop Testing - Basic 1st Half Hour			UEANL	URET1		34.23	0.00								
	Loop Testing - Basic Additional Half Hour			UEANL	URETA		19.90	19.90								
	Manual Order Coordination for UVL-SL1s (per loop)			UEANL	UEAMC		8.17	8.17								
	Order Coordination for Specified Conversion Time for UVL-SL1 (per LSR)			UEANL	OCOSL		18.13	18.13								
	Unbundled Non-Design Voice Loop, billing for BST providing make-up (Engineering Information - E.I.)			UEANL	UEANM		13.47	13.47								
	CLEC to CLEC Conversion Charge Without Outside Dispatch (UVL-SL1)			UEANL	UREWO		15.81	8.96	23.56	5.32						
	Bulk Migration, per 2 Wire Voice Loop-SL1			UEANL	UREPN		37.92	17.62	23.56	5.32						
	Bulk Migration Order Coordination, per 2 Wire Voice Loop-SL1			UEANL	UREPM		8.17	8.17								
2-WIRE Unbundled COPPER LOOP																
	2-Wire Unbundled Copper Loop - Non-Designed Zone 1		1	UEQ	UEQ2X	12.94	36.40	16.10	22.66	4.42						
	2 Wire Unbundled Copper Loop - Non-Designed - Zone 2		2	UEQ	UEQ2X	14.51	36.40	16.10	22.66	4.42						
	2 Wire Unbundled Copper Loop - Non-Designed - Zone 3		3	UEQ	UEQ2X	15.02	36.40	16.10	22.66	4.42						
	Unbundled Miscellaneous Rate Element, Tag Loop at End User Premise			UEQ	URETL		8.95	0.88								
	Loop Testing - Basic 1st Half Hour			UEQ	URET1		34.23	0.00								
	Loop Testing - Basic Additional Half Hour			UEQ	URETA		19.90	19.90								
	Manual Order Coordination 2 Wire Unbundled Copper Loop - Non-Designed (per loop)			UEQ	USBMC		8.17	8.17								
	Unbundled Copper Loop - Non-Design billing for BST providing make-up (Engineering Information - E.I.)			UEQ	UEQMU		13.47	13.47								
	CLEC to CLEC Conversion Charge Without Outside Dispatch (UCL-ND)			UEQ	UREWO		14.30	7.45	22.66	4.42						
	Bulk Migration, per 2 Wire UCL-ND			UEQ	UREPN		36.40	16.10	22.66	4.42						
	Bulk Migration Order Coordination, per 2 Wire UCL-ND			UEQ	UREPM		8.17	8.17								
UNBUNDLED EXCHANGE ACCESS LOOP																
2-WIRE ANALOG VOICE GRADE LOOP																
	2-Wire Analog Voice Grade Loop - Service Level 2 w/Loop or Ground Start Signaling - Zone 1		1	UEA	UEAL2	16.68	105.98	68.43	53.05	10.61						
	2-Wire Analog Voice Grade Loop - Service Level 2 w/Loop or Ground Start Signaling - Zone 2		2	UEA	UEAL2	23.13	105.98	68.43	53.05	10.61						
	2-Wire Analog Voice Grade Loop - Service Level 2 w/Loop or Ground Start Signaling - Zone 3		3	UEA	UEAL2	28.46	105.98	68.43	53.05	10.61						
	2-Wire Analog Voice Grade Loop - Service Level 2 w/Reverse Battery Signaling - Zone 1		1	UEA	UEAR2	16.68	105.98	68.43	53.05	10.61						
	2-Wire Analog Voice Grade Loop - Service Level 2 w/Reverse Battery Signaling - Zone 2		2	UEA	UEAR2	23.13	105.98	68.43	53.05	10.61						
	2-Wire Analog Voice Grade Loop - Service Level 2 w/Reverse Battery Signaling - Zone 3		3	UEA	UEAR2	28.46	105.98	68.43	53.05	10.61						
	Switch-As-Is Conversion rate per UNE Loop, Single LSR, (per DS0)			UEA	URESL		24.88	3.51								
	Switch-As-Is Conversion rate per UNE Loop, Spreadsheet, (per DS0)			UEA	URESP		26.37	4.99								
	CLEC to CLEC Conversion Charge without outside dispatch			UEA	UREWO		87.90	36.44								
	Loop Tagging - Service Level 2 (SL2)			UEA	URETL		11.24	1.10								
	Bulk Migration, per 2 Wire Voice Loop-SL2			UEA	UREPN		105.98	68.43								
	Bulk Migration Order Coordination, per 2 Wire Voice Loop-SL2			UEA	UREPM		0.00	0.00								
4-WIRE ANALOG VOICE GRADE LOOP																
	4-Wire Analog Voice Grade Loop - Zone 1		1	UEA	UEAL4	32.59	132.38	94.83	59.35	14.61						
	4-Wire Analog Voice Grade Loop - Zone 2		2	UEA	UEAL4	43.89	132.38	94.83	59.35	14.61						
	4-Wire Analog Voice Grade Loop - Zone 3		3	UEA	UEAL4	43.38	132.38	94.83	59.35	14.61						
	Switch-As-Is Conversion rate per UNE Loop, Single LSR, (per DS0)			UEA	URESL		24.88	3.51								
	Switch-As-Is Conversion rate per UNE Loop, Spreadsheet, (per DS0)			UEA	URESP		26.37	4.99								
	CLEC to CLEC Conversion Charge without outside dispatch			UEA	UREWO		87.90	36.44								

CATEGORY	RATE ELEMENTS	Interim	Zone	BCS	USOC	RATES($)					Svc Order Submitted Elec per LSR	Svc Order Submitted Manually per LSR	Incremental Charge - Manual Svc Order vs. Electronic-1st	Incremental Charge - Manual Svc Order vs. Electronic-Add'l	Incremental Charge - Manual Svc Order vs. Electronic-Disc 1st	Incremental Charge - Manual Svc Order vs. Electronic-Disc Add'l
						Rec	Nonrecurring		Nonrecurring Disconnect		OSS Rates($)					
							First	Add'l	First	Add'l	SOMEC	SOMAN	SOMAN	SOMAN	SOMAN	SOMAN
2-WIRE ISDN DIGITAL GRADE LOOP																
	2-Wire ISDN Digital Grade Loop - Zone 1		1	UDN	U1L2X	25.21	117.58	80.03	53.05	10.61						
	2-Wire ISDN Digital Grade Loop - Zone 2		2	UDN	U1L2X	32.76	117.58	80.03	53.05	10.61						
	2-Wire ISDN Digital Grade Loop - Zone 3		3	UDN	U1L2X	37.70	117.58	80.03	53.05	10.61						
	CLEC to CLEC Conversion Charge without outside dispatch			UDN	UREWO		91.82	44.25								
2-WIRE ASYMMETRICAL DIGITAL SUBSCRIBER LINE (ADSL) COMPATIBLE LOOP																
	2 Wire Unbundled ADSL Loop including manual service inquiry & facility reservation - Zone 1		1	UAL	UAL2X	12.19	120.84	70.56	50.37	7.93						
	2 Wire Unbundled ADSL Loop including manual service inquiry & facility reservation - Zone 2		2	UAL	UAL2X	13.71	120.84	70.56	50.37	7.93						
	2 Wire Unbundled ADSL Loop including manual service inquiry & facility reservation - Zone 3		3	UAL	UAL2X	14.14	120.84	70.56	50.37	7.93						
	2 Wire Unbundled ADSL Loop without manual service inquiry & facility reservaton - Zone 1		1	UAL	UAL2W	12.19	95.81	57.82	50.37	7.93						
	2 Wire Unbundled ADSL Loop without manual service inquiry & facility reservaton - Zone 2		2	UAL	UAL2W	13.71	95.81	57.82	50.37	7.93						
	2 Wire Unbundled ADSL Loop without manual service inquiry & facility reservaton - Zone 3		3	UAL	UAL2W	14.14	95.81	57.82	50.37	7.93						
	CLEC to CLEC Conversion Charge without outside dispatch			UAL	UREWO		86.38	40.48								
2-WIRE HIGH BIT RATE DIGITAL SUBSCRIBER LINE (HDSL) COMPATIBLE LOOP																
	2 Wire Unbundled HDSL Loop including manual service inquiry & facility reservation - Zone 1		1	UHL	UHL2X	9.58	129.52	79.24	50.37	7.93						
	2 Wire Unbundled HDSL Loop including manual service inquiry & facility reservation - Zone 2		2	UHL	UHL2X	10.92	129.52	79.24	50.37	7.93						
	2 Wire Unbundled HDSL Loop including manual service inquiry & facility reservation - Zone 3		3	UHL	UHL2X	11.40	129.52	79.24	50.37	7.93						
	2 Wire Unbundled HDSL Loop without manual service inquiry and facility reservation - Zone 1		1	UHL	UHL2W	9.58	104.49	66.50	50.37	7.93						
	2 Wire Unbundled HDSL Loop without manual service inquiry and facility reservation - Zone 2		2	UHL	UHL2W	10.92	104.49	66.50	50.37	7.93						
	2 Wire Unbundled HDSL Loop without manual service inquiry and facility reservation - Zone 3		3	UHL	UHL2W	11.40	104.49	66.50	50.37	7.93						
	CLEC to CLEC Conversion Charge without outside dispatch			UHL	UREWO		86.32	40.48								
4-WIRE HIGH BIT RATE DIGITAL SUBSCRIBER LINE (HDSL) COMPATIBLE LOOP																
	4 Wire Unbundled HDSL Loop including manual service inquiry and facility reservation - Zone 1		1	UHL	UHL4X	16.02	158.18	107.89	55.12	10.38						
	4-Wire Unbundled HDSL Loop including manual service inquiry and facility reservation - Zone 2		2	UHL	UHL4X	14.33	158.18	107.89	55.12	10.38						
	4-Wire Unbundled HDSL Loop including manual service inquiry and facility reservation - Zone 3		3	UHL	UHL4X	16.84	158.18	107.89	55.12	10.38						
	4-Wire Unbundled HDSL Loop without manual service inquiry and facility reservation - Zone 1		1	UHL	UHL4W	16.02	133.14	95.16	55.12	10.38						
	4-Wire Unbundled HDSL Loop without manual service inquiry and facility reservation - Zone 2		2	UHL	UHL4W	14.33	133.14	95.16	55.12	10.38						
	4-Wire Unbundled HDSL Loop without manual service inquiry and facility reservation - Zone 3		3	UHL	UHL4W	16.84	133.14	95.16	55.12	10.38						
	CLEC to CLEC Conversion Charge without outside dispatch			UHL	UREWO		86.32	40.48								
4-WIRE DS1 DIGITAL LOOP																
	4-Wire DS1 Digital Loop - Zone 1		1	USL	USLXX	79.51	253.03	157.89	44.80	11.73						
	4-Wire DS1 Digital Loop - Zone 2		2	USL	USLXX	136.00	253.03	157.89	44.80	11.73						
	4-Wire DS1 Digital Loop - Zone 3		3	USL	USLXX	229.15	253.03	157.89	44.80	11.73						
	Switch-As-Is Conversion rate per UNE Loop, Single LSR, (per DS1)			USL	URESL		24.88	3.51								
	Switch-As-Is Conversion rate per UNE Loop, Spreadsheet, (per DS1)			USL	URESP		26.37	4.99								
	CLEC to CLEC Conversion Charge without outside dispatch			USL	UREWO		101.30	43.13								
4-WIRE 19.2, 56 OR 64 KBPS DIGITAL GRADE LOOP																
	4 Wire Unbundled Digital Loop 2.4 Kbps - Zone 1		1	UDL	UDL2X	29.93	126.66	89.12	59.35	14.61						
	4 Wire Unbundled Digital Loop 2.4 Kbps - Zone 2		2	UDL	UDL2X	33.99	126.66	89.12	59.35	14.61						

UNBUNDLED NETWORK ELEMENTS - South Carolina														Attachment: 2 Exh A			
CATEGORY		RATE ELEMENTS	Interim	Zone	BCS	USOC	RATES($)					Svc Order Submitted Elec per LSR	Svc Order Submitted Manually per LSR	Incremental Charge - Manual Svc Order vs. Electronic-1st	Incremental Charge - Manual Svc Order vs. Electronic-Add'l	Incremental Charge - Manual Svc Order vs. Electronic-Disc 1st	Incremental Charge - Manual Svc Order vs. Electronic-Disc Add'l
							Rec	Nonrecurring		Nonrecurring Disconnect		OSS Rates($)					
								First	Add'l	First	Add'l	SOMEC	SOMAN	SOMAN	SOMAN	SOMAN	SOMAN
		4 Wire Unbundled Digital Loop 2.4 Kbps - Zone3		3	UDL	UDL2X	34.74	126.66	89.12	59.35	14.61						
		4 Wire Unbundled Digital Loop 4.8 Kbps -Zone 1		1	UDL	UDL4X	29.93	126.66	89.12	59.35	14.61						
		4 Wire Unbundled Digital Loop 4.8 Kbps - Zone 2		2	UDL	UDL4X	33.99	126.66	89.12	59.35	14.61						
		4 Wire Unbundled Digital Loop 4.8 Kbps - Zone 3		3	UDL	UDL4X	34.74	126.66	89.12	59.35	14.61						
		4 Wire Unbundled Digital Loop 9.6 Kbps - Zone 1		1	UDL	UDL9X	29.93	126.66	89.12	59.35	14.61						
		5 Wire Unbundled Digital Loop 9.6 Kbps - Zone 2		2	UDL	UDL9X	33.99	126.66	89.12	59.35	14.61						
		6 Wire Unbundled Digital Loop 9.6 Kbps - Zone 3		3	UDL	UDL9X	34.74	126.66	89.12	59.35	14.61						
		4 Wire Unbundled Digital 19.2 Kbps - Zone 1		1	UDL	UDL19	29.93	126.66	89.12	59.35	14.61						
		4 Wire Unbundled Digital 19.2 Kbps - Zone 2		2	UDL	UDL19	33.99	126.66	89.12	59.35	14.61						
		4 Wire Unbundled Digital 19.2 Kbps - Zone 3		3	UDL	UDL19	34.74	126.66	89.12	59.35	14.61						
		4 Wire Unbundled Digital Loop 56 Kbps - Zone 1		1	UDL	UDL56	29.93	126.66	89.12	59.35	14.61						
		4 Wire Unbundled Digital Loop 56 Kbps - Zone 2		2	UDL	UDL56	33.99	126.66	89.12	59.35	14.61						
		4 Wire Unbundled Digital Loop 56 Kbps - Zone 3		3	UDL	UDL56	34.74	126.66	89.12	59.35	14.61						
		4 Wire Unbundled Digital Loop 64 Kbps - Zone 1		1	UDL	UDL64	29.93	126.66	89.12	59.35	14.61						
		4 Wire Unbundled Digital Loop 64 Kbps - Zone 2		2	UDL	UDL64	33.99	126.66	89.12	59.35	14.61						
		4 Wire Unbundled Digital Loop 64 Kbps - Zone 3		3	UDL	UDL64	34.74	126.66	89.12	59.35	14.61						
		Switch-As-Is Conversion rate per UNE Loop, Single LSR, (per DS0)			UDL	URESL		24.88	3.51								
		Switch-As-Is Conversion rate per UNE Loop, Spreadsheet, (per DS0)			UDL	URESP		26.37	4.99								
		CLEC to CLEC Conversion Charge without outside dispatch			UDL	UREWO		102.34	49.85								
	2-WIRE Unbundled COPPER LOOP																
		2-Wire Unbundled Copper Loop-Designed including manual service inquiry & facility reservation - Zone 1		1	UCL	UCLPB	12.19	119.91	69.62	50.37	7.93						
		2-Wire Unbundled Copper Loop-Designed including manual service inquiry & facility reservation - Zone 2		2	UCL	UCLPB	13.71	119.91	69.62	50.37	7.93						
		2 Wire Unbundled Copper Loop-Designed including manual service inquiry & facility reservation - Zone 3		3	UCL	UCLPB	14.14	119.91	69.62	50.37	7.93						
		2-Wire Unbundled Copper Loop-Designed without manual service inquiry and facility reservation - Zone 1		1	UCL	UCLPW	12.19	94.87	56.89	50.37	7.93						
		2-Wire Unbundled Copper Loop-Designed without manual service inquiry and facility reservation - Zone 2		2	UCL	UCLPW	13.71	94.87	56.89	50.37	7.93						
		2-Wire Unbundled Copper Loop-Designed without manual service inquiry and facility reservation - Zone 3		3	UCL	UCLPW	14.14	94.87	56.89	50.37	7.93						
		Order Coordination for Unbundled Copper Loops (per loop)			UCL	UCLMC		8.17	8.17								
		CLEC to CLEC Conversion Charge without outside dispatch (UCL-Des)			UCL	UREWO		94.87	42.57								
	4-WIRE COPPER LOOP																
		4-Wire Copper Loop-Designed including manual service inquiry and facility reservation - Zone 1		1	UCL	UCL4S	19.64	144.17	93.88	55.12	10.38						
		4-Wire Copper Loop-Designed including manual service inquiry and facility reservation - Zone 2		2	UCL	UCL4S	20.90	144.17	93.88	55.12	10.38						
		4-Wire Copper Loop-Designed including manual service inquiry and facility reservation - Zone 3		3	UCL	UCL4S	19.34	144.17	93.88	55.12	10.38						
		4-Wire Copper Loop-Designed without manual service inquiry and facility reservation - Zone 1		1	UCL	UCL4W	19.64	119.13	81.15	55.12	10.38						
		4-Wire Copper Loop-Designed without manual service inquiry and facility reservation - Zone 2		2	UCL	UCL4W	20.90	119.13	81.15	55.12	10.38						
		4-Wire Copper Loop-Designed without manual service inquiry and facility reservation - Zone 3		3	UCL	UCL4W	19.34	119.13	81.15	55.12	10.38						
		Order Coordination for Unbundled Copper Loops (per loop)			UCL	UCLMC		8.17	8.17								
		CLEC to CLEC Conversion Charge without outside dispatch (UCL-Des)			UCL	UREWO		94.87	42.57								
		Order Coordination for Specified Conversion Time (per LSR)			UEA, UDN, UAL, UHL, UDL, USL	OCOSL		18.13									
	Rearrangements																
		EEL to UNE-L Retermination, per 2 Wire Unbundled Voice Loop-SL2			UEA	UREEL		87.90	36.44								

CATEGORY	RATE ELEMENTS	Interim	Zone	BCS	USOC	RATES($)					Svc Order Submitted Elec per LSR	Svc Order Submitted Manually per LSR	Incremental Charge - Manual Svc Order vs. Electronic-1st	Incremental Charge - Manual Svc Order vs. Electronic-Add'l	Incremental Charge - Manual Svc Order vs. Electronic-Disc 1st	Incremental Charge - Manual Svc Order vs. Electronic-Disc Add'l
						Rec	Nonrecurring		Nonrecurring Disconnect		OSS Rates($)					
							First	Add'l	First	Add'l	SOMEC	SOMAN	SOMAN	SOMAN	SOMAN	SOMAN
	EEL to UNE-L Retermination, per 4 Wire Unbundled Voice Loop			UEA	UREEL		87.90	36.44								
	EEL to UNE-L Retermination, per 2 Wire ISDN Loop			UDN	UREEL		91.82	44.25								
	EEL to UNE-L Retermination, per 4 Wire Unbundled Digital Loop			UDL	UREEL		102.34	49.85								
	EEL to UNE-L Retermination, per 4 Wire Unbundled DS1 Loop			USL	UREEL		101.30	43.13								
UNE LOOP COMMINGLING																
2-WIRE ANALOG VOICE GRADE LOOP - COMMINGLING																
	2-Wire Analog Voice Grade Loop - Service Level 2 w/Loop or Ground Start Signaling - Zone 1		1	NTCVG	UEAL2	16.68	105.98	68.43	53.05	10.61						
	2-Wire Analog Voice Grade Loop - Service Level 2 w/Loop or Ground Start Signaling - Zone 2		2	NTCVG	UEAL2	23.13	105.98	68.43	53.05	10.61						
	2-Wire Analog Voice Grade Loop - Service Level 2 w/Loop or Ground Start Signaling - Zone 3		3	NTCVG	UEAL2	28.46	105.98	68.43	53.05	10.61						
	2-Wire Analog Voice Grade Loop - Service Level 2 w/Reverse Battery Signaling - Zone 1		1	NTCVG	UEAR2	16.68	105.98	68.43	53.05	10.61						
	2-Wire Analog Voice Grade Loop - Service Level 2 w/Reverse Battery Signaling - Zone 2		2	NTCVG	UEAR2	23.13	105.98	68.43	53.05	10.61						
	2-Wire Analog Voice Grade Loop - Service Level 2 w/Reverse Battery Signaling - Zone 3		3	NTCVG	UEAR2	28.46	105.98	68.43	53.05	10.61						
	Switch-As-Is Conversion rate per UNE Loop, Single LSR, (per DS0)			NTCVG	URESL		24.88	3.51								
	Switch-As-Is Conversion rate per UNE Loop, Spreadsheet, (per DS0)			NTCVG	URESP		26.37	4.99								
	CLEC to CLEC Conversion Charge without outside dispatch			NTCVG	UREWO		87.90	36.44								
	Loop Tagging - Service Level 2 (SL2)			NTCVG	URETL		11.24	1.10								
4-WIRE ANALOG VOICE GRADE LOOP																
	4-Wire Analog Voice Grade Loop - Zone 1		1	NTCVG	UEAL4	32.59	132.38	94.83	59.35	14.61						
	4-Wire Analog Voice Grade Loop - Zone 2		2	NTCVG	UEAL4	43.89	132.38	94.83	59.35	14.61						
	4-Wire Analog Voice Grade Loop - Zone 3		3	NTCVG	UEAL4	43.38	132.38	94.83	59.35	14.61						
	Switch-As-Is Conversion rate per UNE Loop, Single LSR, (per DS0)			NTCVG	URESL		24.88	3.51								
	Switch-As-Is Conversion rate per UNE Loop, Spreadsheet, (per DS0)			NTCVG	URESP		26.37	4.99								
	CLEC to CLEC Conversion Charge without outside dispatch			NTCVG	UREWO		87.90	36.44								
4-WIRE DS1 DIGITAL LOOP - COMMINGLING																
	4-Wire DS1 Digital Loop - Zone 1		1	NTCD1	USLXX	79.51	253.03	157.89	44.80	11.73						
	4-Wire DS1 Digital Loop - Zone 2		2	NTCD1	USLXX	136.00	253.03	157.89	44.80	11.73						
	4-Wire DS1 Digital Loop - Zone 3		3	NTCD1	USLXX	229.15	253.03	157.89	44.80	11.73						
	Switch-As-Is Conversion rate per UNE Loop, Single LSR, (per DS1)			NTCD1	URESL		24.88	3.51								
	Switch-As-Is Conversion rate per UNE Loop, Spreadsheet, (per DS1)			NTCD1	URESP		26.37	4.99								
	CLEC to CLEC Conversion Charge without outside dispatch			NTCD1	UREWO		101.30	43.13								
4-WIRE 19.2, 56 OR 64 KBPS DIGITAL GRADE LOOP																
	4 Wire Unbundled Digital Loop 2.4 Kbps - Zone 1		1	NTCUD	UDL2X	29.93	126.66	89.12	59.35	14.61						
	4 Wire Unbundled Digital Loop 2.4 Kbps - Zone 2		2	NTCUD	UDL2X	33.99	126.66	89.12	59.35	14.61						
	4 Wire Unbundled Digital Loop 2.4 Kbps - Zone3		3	NTCUD	UDL2X	34.74	126.66	89.12	59.35	14.61						
	4 Wire Unbundled Digital Loop 4.8 Kbps -Zone 1		1	NTCUD	UDL4X	29.93	126.66	89.12	59.35	14.61						
	4 Wire Unbundled Digital Loop 4.8 Kbps - Zone 2		2	NTCUD	UDL4X	33.99	126.66	89.12	59.35	14.61						
	4 Wire Unbundled Digital Loop 4.8 Kbps - Zone 3		3	NTCUD	UDL4X	34.74	126.66	89.12	59.35	14.61						
	4 Wire Unbundled Digital Loop 9.6 Kbps - Zone 1		1	NTCUD	UDL9X	29.93	126.66	89.12	59.35	14.61						
	5 Wire Unbundled Digital Loop 9.6 Kbps - Zone 2		2	NTCUD	UDL9X	33.99	126.66	89.12	59.35	14.61						
	6 Wire Unbundled Digital Loop 9.6 Kbps - Zone 3		3	NTCUD	UDL9X	34.74	126.66	89.12	59.35	14.61						
	4 Wire Unbundled Digital 19.2 Kbps - Zone 1		1	NTCUD	UDL19	29.93	126.66	89.12	59.35	14.61						
	4 Wire Unbundled Digital 19.2 Kbps - Zone 2		2	NTCUD	UDL19	33.99	126.66	89.12	59.35	14.61						
	4 Wire Unbundled Digital 19.2 Kbps - Zone 3		3	NTCUD	UDL19	34.74	126.66	89.12	59.35	14.61						
	4 Wire Unbundled Digital Loop 56 Kbps - Zone 1		1	NTCUD	UDL56	29.93	126.66	89.12	59.35	14.61						
	4 Wire Unbundled Digital Loop 56 Kbps - Zone 2		2	NTCUD	UDL56	33.99	126.66	89.12	59.35	14.61						

CATEGORY	RATE ELEMENTS	Interim	Zone	BCS	USOC	RATES($)					Svc Order Submitted Elec per LSR	Svc Order Submitted Manually per LSR	Incremental Charge - Manual Svc Order vs. Electronic-1st	Incremental Charge - Manual Svc Order vs. Electronic-Add'l	Incremental Charge - Manual Svc Order vs. Electronic-Disc 1st	Incremental Charge - Manual Svc Order vs. Electronic-Disc Add'l
						Rec	Nonrecurring		Nonrecurring Disconnect		OSS Rates($)					
							First	Add'l	First	Add'l	SOMEC	SOMAN	SOMAN	SOMAN	SOMAN	SOMAN
	4 Wire Unbundled Digital Loop 56 Kbps - Zone 3		3	NTCUD	UDL56	34.74	126.66	89.12	59.35	14.61						
	4 Wire Unbundled Digital Loop 64 Kbps - Zone 1		1	NTCUD	UDL64	29.93	126.66	89.12	59.35	14.61						
	4 Wire Unbundled Digital Loop 64 Kbps - Zone 2		2	NTCUD	UDL64	33.99	126.66	89.12	59.35	14.61						
	4 Wire Unbundled Digital Loop 64 Kbps - Zone 3		3	NTCUD	UDL64	34.74	126.66	89.12	59.35	14.61						
	Switch-As-Is Conversion rate per UNE Loop, Single LSR, (per DS0)			NTCUD	URESL		24.88	3.51								
	Switch-As-Is Conversion rate per UNE Loop, Spreadsheet, (per DS0)			NTCUD	URESP		26.37	4.99								
	CLEC to CLEC Conversion Charge without outside dispatch			NTCUD	UREWO		102.34	49.85								
	Order Coordination for Specified Conversion Time (per LSR)			NTCVG, NTCUD, NTCD1	OCOSL		18.13									
LOOP MODIFICATION																
	Unbundled Loop Modification, Removal of Load Coils - 2 Wire pair less than or equal to 18k ft, per Unbundled Loop			UAL, UHL, UCL, UEQ, ULS, UEA, UEANL, UEPSR, UEPSB	ULM2L		32.46	32.46								
	Unbundled Loop Modification Removal of Load Coils - 4 Wire less than or equal to 18K ft, per Unbundled Loop			UHL, UCL, UEA	ULM4L		32.46	32.46								
	Unbundled Loop Modification Removal of Bridged Tap Removal, per unbundled loop			UAL, UHL, UCL, UEQ, ULS, UEA, UEANL, UEPSR, UEPSB	ULMBT		32.48	32.48								
SUB-LOOPS																
Sub-Loop Distribution																
	Sub-Loop - Per Cross Box Location - CLEC Feeder Facility Set-Up			UEANL, UEF	USBSA		241.42	241.42								
	Sub-Loop - Per Cross Box Location - Per 25 Pair Panel Set-Up			UEANL, UEF	USBSB		22.69	22.69								
	Sub-Loop - Per Building Equipment Room - CLEC Feeder Facility Set-Up			UEANL	USBSC		177.84	177.84								
	Sub-Loop - Per Building Equipment Room - Per 25 Pair Panel Set-Up			UEANL	USBSD		55.58	55.58								
	Sub-Loop Distribution Per 2-Wire Analog Voice Grade Loop - Zone 1		1	UEANL	USBN2	8.87	65.94	31.03	45.35	6.71						
	Sub-Loop Distribution Per 2-Wire Analog Voice Grade Loop - Zone 2		2	UEANL	USBN2	12.58	65.94	31.03	45.35	6.71						
	Sub-Loop Distribution Per 2-Wire Analog Voice Grade Loop - Zone 3		3	UEANL	USBN2	14.79	65.94	31.03	45.35	6.71						
	Order Coordination for Unbundled Sub-Loops, per sub-loop pair			UEANL	USBMC		8.17	8.17								
	Sub-Loop Distribution Per 4-Wire Analog Voice Grade Loop - Zone 1		1	UEANL	USBN4	14.11	79.21	44.29	49.82	9.09						
	Sub-Loop Distribution Per 4-Wire Analog Voice Grade Loop - Zone 2		2	UEANL	USBN4	19.40	79.21	44.29	49.82	9.09						
	Sub-Loop Distribution Per 4-Wire Analog Voice Grade Loop - Zone 3		3	UEANL	USBN4	18.90	79.21	44.29	49.82	9.09						
	Order Coordination for Unbundled Sub-Loops, per sub-loop pair			UEANL	USBMC		8.17	8.17								
	Sub-Loop 2-Wire Intrabuilding Network Cable (INC)			UEANL	USBR2	2.41	53.13	18.21	45.35	6.71						
	Order Coordination for Unbundled Sub-Loops, per sub-loop pair			UEANL	USBMC		8.17	8.17								
	Sub-Loop 4-Wire Intrabuilding Network Cable (INC)			UEANL	USBR4	5.36	59.38	24.47	49.82	9.09						
	Order Coordination for Unbundled Sub-Loops, per sub-loop pair			UEANL	USBMC		8.17	8.17								
	Loop Testing - Basic 1st Half Hour			UEANL	URET1		34.23	0.00								
	Loop Testing - Basic Additional Half Hour			UEANL	URETA		19.90	19.90								
	2 Wire Copper Unbundled Sub-Loop Distribution - Zone 1		1	UEF	UCS2X	7.11	65.94	31.03	45.35	6.71						
	2 Wire Copper Unbundled Sub-Loop Distribution - Zone 2		2	UEF	UCS2X	9.83	65.94	31.03	45.35	6.71						
	2 Wire Copper Unbundled Sub-Loop Distribution - Zone 3		3	UEF	UCS2X	10.48	65.94	31.03	45.35	6.71						

CATEGORY	RATE ELEMENTS	Interim	Zone	BCS	USOC	RATES($)					Svc Order Submitted Elec per LSR	Svc Order Submitted Manually per LSR	Incremental Charge - Manual Svc Order vs. Electronic-1st	Incremental Charge - Manual Svc Order vs. Electronic-Add'l	Incremental Charge - Manual Svc Order vs. Electronic-Disc 1st	Incremental Charge - Manual Svc Order vs. Electronic-Disc Add'l
						Rec	Nonrecurring		Nonrecurring Disconnect		OSS Rates($)					
							First	Add'l	First	Add'l	SOMEC	SOMAN	SOMAN	SOMAN	SOMAN	SOMAN
	Order Coordination for Unbundled Sub-Loops, per sub-loop pair			UEF	USBMC		8.17	8.17								
	4 Wire Copper Unbundled Sub-Loop Distribution - Zone 1		1	UEF	UCS4X	7.85	79.21	44.29	49.82	9.09						
	4 Wire Copper Unbundled Sub-Loop Distribution - Zone 2		2	UEF	UCS4X	14.17	79.21	44.29	49.82	9.09						
	4 Wire Copper Unbundled Sub-Loop Distribution - Zone 3		3	UEF	UCS4X	12.64	79.21	44.29	49.82	9.09						
	Order Coordination for Unbundled Sub-Loops, per sub-loop pair			UEF	USBMC		8.17	8.17								
	Loop Tagging Service Level 1, Unbundled Copper Loop, Non-Designed and Distribution Subloops			UEF, UEANL	URETL		8.95	0.88								
	Loop Testing - Basic 1st Half Hour			UEF	URET1		34.23	0.00								
	Loop Testing - Basic Additional Half Hour			UEF	URETA		19.90	19.90								
	Unbundled Sub-Loop Modification															
	Unbundled Sub-Loop Modification - 2-W Copper Dist Load Coil/Equip Removal per 2-W PR			UEF	ULM2X		176.17	5.11								
	Unbundled Sub-loop Modification - 4-W Copper Dist Load Coil/Equip Removal per 4-W PR			UEF	ULM4X		176.17	5.11								
	Unbundled Loop Modification, Removal of Bridge Tap, per unbundled loop			UEF	ULMBT		278.82	6.13								
	Unbundled Network Terminating Wire (UNTW)															
	Unbundled Network Terminating Wire (UNTW) per Pair			UENTW	UENPP	0.3303	30.20	30.20								
	Network Interface Device (NID)															
	Network Interface Device (NID) - 1-2 lines			UENTW	UND12		43.68	28.79								
	Network Interface Device (NID) - 1-6 lines			UENTW	UND16		64.42	49.53								
	Network Interface Device Cross Connect - 2 W			UENTW	UNDC2		5.92	5.92								
	Network Interface Device Cross Connect - 4W			UENTW	UNDC4		5.92	5.92								
UNE OTHER, PROVISIONING ONLY - NO RATE																
	Unbundled Contact Name, Provisioning Only - no rate			UAL, UCL, UDC, UDL, UDN, UEA, UHL, UEANL, UEF, UEQ, UENTW, NTCVG, NTCUD, NTCD1, USL	UNECN	0.00	0.00									
	Unbundled DS1 Loop - Superframe Format Option - no rate			USL, NTCD1	CCOSF	0.00	0.00									
	Unbundled DS1 Loop - Expanded Superframe Format option - no rate			USL, NTCD1	CCOEF	0.00	0.00									
	NID - Dispatch and Service Order for NID installation			UENTW	UNDBX	0.00	0.00									
	UNTW Circuit Establishment, Provisioning Only - No Rate			UENTW	UENCE	0.00	0.00									
LOOP MAKE-UP																
	Loop Makeup - Preordering Without Reservation, per working or spare facility queried (Manual).			UMK	UMKLW		24.04	24.04								
	Loop Makeup - Preordering With Reservation, per spare facility queried (Manual).			UMK	UMKLP		25.49	25.49								
	Loop Makeup--With or Without Reservation, per working or spare facility queried (Mechanized)			UMK	UMKMQ		0.34	0.34								
LINE SPLITTING																
	END USER ORDERING-CENTRAL OFFICE BASED															
	Line Splitting - per line activation DLEC owned splitter			UEPSR UEPSB	UREOS	0.61										
	Line Splitting - per line activation BST owned - physical			UEPSR UEPSB	UREBP	0.61	37.09	21.24	20.07	9.85						
	Line Splitting - per line activation BST owned - virtual			UEPSR UEPSB	UREBV	0.61	37.09	21.24	20.07	9.85						
	END USER ORDERING - REMOTE SITE LINE SPLITTING															
	UNBUNDLED EXCHANGE ACCESS LOOP															
	2-WIRE ANALOG VOICE GRADE LOOP															
	2 Wire Analog Voice Grade Loop-Service Level 1-Line Splitting-Zone 1		1	UEPSR UEPSB	UEALS	14.94	37.92	17.62	23.56	5.32						
	2 Wire Analog Voice Grade Loop-Service Level 1-Line Splitting-Zone 1		1	UEPSR UEPSB	UEABS	14.94	37.92	17.62	23.56	5.32						
	2 Wire Analog Voice Grade Loop- Service Level 1-Line Splitting-Zone 2		2	UEPSR UEPSB	UEALS	21.39	37.92	17.62	23.56	5.32						

CATEGORY	RATE ELEMENTS	Interim	Zone	BCS	USOC	RATES($)					Svc Order Submitted Elec per LSR	Svc Order Submitted Manually per LSR	Incremental Charge - Manual Svc Order vs. Electronic-1st	Incremental Charge - Manual Svc Order vs. Electronic-Add'l	Incremental Charge - Manual Svc Order vs. Electronic-Disc 1st	Incremental Charge - Manual Svc Order vs. Electronic-Disc Add'l
						Rec	Nonrecurring		Nonrecurring Disconnect		OSS Rates($)					
							First	Add'l	First	Add'l	SOMEC	SOMAN	SOMAN	SOMAN	SOMAN	SOMAN
	2 Wire Analog Voice Grade Loop- Service Level 1-Line Splitting-Zone 2		2	UEPSR UEPSB	UEABS	21.39	37.92	17.62	23.56	5.32						
	2 Wire Analog Voice Grade Loop-Service Level 1-Line Splitting-Zone 3		3	UEPSR UEPSB	UEALS	26.72	37.92	17.62	23.56	5.32						
	2 Wire Analog Voice Grade Loop-Service Level 1-Line Splitting-Zone 3		3	UEPSR UEPSB	UEABS	26.72	37.92	17.62	23.56	5.32						
	PHYSICAL COLLOCATION															
	Physical Collocation-2 Wire Cross Connects (Loop) for Line Splitting			UEPSR UEPSB	PE1LS	0.0341	12.32	11.83	6.04	5.45						
	VIRTUAL COLLOCATION															
	Virtual Collocation-2 Wire Cross Connects (Loop) for Line Splitting			UEPSR UEPSB	VE1LS	0.0317	12.32	11.83	6.04	5.45						
MAINTENANCE OF SERVICE																
	NOTE: The Expedite charge will be maintained commensurate with BellSouth's FCC No.1 Tariff, Section 13.3.1 as applicable.															
	No Trouble Found - per 1/2 hour increments - Basic						80.00	55.00								
	No Trouble Found - per 1/2 hour increments - Overtime						90.00	65.00								
	No Trouble Found - per 1/2 hour increments - Premium						100.00	75.00								
UNBUNDLED DEDICATED TRANSPORT																
	INTEROFFICE CHANNEL - DEDICATED TRANSPORT															
	Interoffice Channel - 2-Wire Voice Grade - per mile			U1TVX	1L5XX	0.0167										
	Interoffice Channel - 2-Wire Voice Grade - Facility Termination			U1TVX	U1TV2	24.30	40.63	27.47	16.77	6.91						
	Interoffice Channel - 2-Wire Voice Grade Rev Bat. - per mile			U1TVX	1L5XX	0.0167										
	Interoffice Channel - 2-Wire VG Rev Bat. - Facility Termination			U1TVX	U1TR2	24.30	40.63	27.47	16.77	6.91						
	Interoffice Channel - 4-Wire Voice Grade - per mile			U1TVX	1L5XX	0.0167										
	Interoffice Channel - 4- Wire Voice Grade - Facility Termination			U1TVX	U1TV4	21.29	40.63	27.47	16.77	6.91						
	Interoffice Channel - 56 kbps - per mile			U1TDX	1L5XX	0.0167										
	Interoffice Channel - 56 kbps - Facility Termination			U1TDX	U1TD5	16.76	40.63	27.47	16.77	6.91						
	Interoffice Channel - 64 kbps - per mile			U1TDX	1L5XX	0.0167										
	Interoffice Channel - 64 kbps - Facility Termination			U1TDX	U1TD6	16.76	40.63	27.47	16.77	6.91						
	Interoffice Channel - DS1 - per mile			U1TD1	1L5XX	0.0167										
	Interoffice Channel - DS1 - Facility Termination			U1TD1	U1TF1	77.14	89.47	81.99	16.39	14.48						
	Interoffice Channel - DS3 - per mile			U1TD3	1L5XX	8.02										
	Interoffice Channel - DS3 - Facility Termination			U1TD3	U1TF3	880.65	279.37	163.12	60.33	58.59						
	Interoffice Channel - STS-1 - per mile			U1TS1	1L5XX	8.02										
	Interoffice Channel - STS-1 - Facility Termination			U1TS1	U1TFS	880.55	279.37	163.12	60.33	58.59						
	UNBUNDLED DARK FIBER															
	Dark Fiber - Interoffice Transport, Per Four Fiber Strands, Per Route Mile Or Fraction Thereof			UDF, UDFCX	1L5DF	36.41										
	Dark Fiber - Interoffice Transport, Per Four Fiber Strands, Per Route Mile Or Fraction Thereof			UDF, UDFCX	UDF14		640.51	138.17	317.76	198.11						
HIGH CAPACITY UNBUNDLED LOCAL LOOP																
	DS-3/STS-1 UNBUNDLED LOCAL LOOP - Stand Alone															
	DS3 Unbundled Local Loop - per mile			UE3	1L5ND	12.26										
	DS3 Unbundled Local Loop - Facility Termination			UE3	UE3PX	306.36	452.52	264.53	119.75	83.77						
	STS-1Unbundled Local Loop - per mile			UDLSX	1L5ND	12.26										
	STS-1 Unbundled Local Loop - Facility Termination			UDLSX	UDLS1	313.49	452.52	264.53	119.75	83.77						
ENHANCED EXTENDED LINK (EELs)																
	Network Elements Used in Combinations															
	2-Wire VG Loop (SL2) in Combination - Zone 1		1	UNCVX	UEAL2	16.68	105.98	68.43	53.05	10.61						
	2-Wire VG Loop (SL2) in Combination - Zone 2		2	UNCVX	UEAL2	23.13	105.98	68.43	53.05	10.61						
	2-Wire VG Loop (SL2) in Combination - Zone 3		3	UNCVX	UEAL2	28.46	105.98	68.43	53.05	10.61						
	4-Wire Analog Voice Grade Loop in Combination - Zone 1		1	UNCVX	UEAL4	32.59	132.38	94.83	59.35	14.61						
	4-Wire Analog Voice Grade Loop in Combination - Zone 2		2	UNCVX	UEAL4	43.89	132.38	94.83	59.35	14.61						
	4-Wire Analog Voice Grade Loop in Combination - Zone 3		3	UNCVX	UEAL4	43.38	132.38	94.83	59.35	14.61						
	2-Wire ISDN Loop in Combination - Zone 1		1	UNCNX	U1L2X	25.21	117.58	80.03	53.05	10.61						
	2-Wire ISDN Loop in Combination - Zone 2		2	UNCNX	U1L2X	32.76	117.58	80.03	53.05	10.61						
	2-Wire ISDN Loop in Combination - Zone 3		3	UNCNX	U1L2X	37.70	117.58	80.03	53.05	10.61						

UNBUNDLED NETWORK ELEMENTS - South Carolina

Attachment: 2 Exh A

CATEGORY	RATE ELEMENTS	Interim	Zone	BCS	USOC	RATES($) Rec	Nonrecurring First	Nonrecurring Add'l	Nonrecurring Disconnect First	Nonrecurring Disconnect Add'l	Svc Order Submitted Elec per LSR	Svc Order Submitted Manually per LSR	Incremental Charge - Manual Svc Order vs. Electronic-1st	Incremental Charge - Manual Svc Order vs. Electronic-Add'l	Incremental Charge - Manual Svc Order vs. Electronic-Disc 1st	Incremental Charge - Manual Svc Order vs. Electronic-Disc Add'l
											OSS Rates($)					
							First	Add'l	First	Add'l	SOMEC	SOMAN	SOMAN	SOMAN	SOMAN	SOMAN
	4-Wire 56Kbps Digital Grade Loop in Combination - Zone 1		1	UNCDX	UDL56	29.93	126.66	89.12	59.35	14.61						
	4-Wire 56Kbps Digital Grade Loop in Combination - Zone 2		2	UNCDX	UDL56	33.99	126.66	89.12	59.35	14.61						
	4-Wire 56Kbps Digital Grade Loop in Combination - Zone 3		3	UNCDX	UDL56	34.74	126.66	89.12	59.35	14.61						
	4-Wire 64Kbps Digital Grade Loop in Combination - Zone 1		1	UNCDX	UDL64	29.93	126.66	89.12	59.35	14.61						
	4-Wire 64Kbps Digital Grade Loop in Combination - Zone 2		2	UNCDX	UDL64	33.99	126.66	89.12	59.35	14.61						
	4-Wire 64Kbps Digital Grade Loop in Combination - Zone 3		3	UNCDX	UDL64	34.74	126.66	89.12	59.35	14.61						
	4-Wire DS1 Digital Loop in Combination - Zone 1		1	UNC1X	USLXX	79.51	253.03	157.89	44.80	11.73						
	4-Wire DS1 Digital Loop in Combination - Zone 2		2	UNC1X	USLXX	136.00	253.03	157.89	44.80	11.73						
	4-Wire DS1 Digital Loop in Combination - Zone 3		3	UNC1X	USLXX	229.15	253.03	157.89	44.80	11.73						
	DS3 Local Loop in combination - per mile			UNC3X	1L5ND	12.26										
	DS3 Local Loop in combination - Facility Termination			UNC3X	UE3PX	306.36	452.52	264.53	119.75	83.77						
	STS-1 Local Loop in combination - per mile			UNCSX	1L5ND	12.26										
	STS-1 Local Loop in combination - Facility Termination			UNCSX	UDLS1	313.49	452.52	264.53	119.75	83.77						
	Interoffice Channel in combination - 2-wire VG - per mile			UNCVX	1L5XX	0.0167										
	Interoffice Channel in combination - 2-wire VG - Facility Termination			UNCVX	U1TV2	24.30	40.63	27.47	16.77	6.91						
	Interoffice Channel in combination - 4-wire VG - per mile			UNCVX	1L5XX	0.0167										
	Interoffice Channel in combination - 4-wire VG - Facility Termination			UNCVX	U1TV4	21.29	40.63	27.47	16.77	6.91						
	Interoffice Channel in combination - 4-wire 56 kbps - per mile			UNCDX	1L5XX	0.0167										
	Interoffice Channel in combination - 4-wire 56 kbps - Facility Termination			UNCDX	U1TD5	16.76	40.63	27.47	16.77	6.91						
	Interoffice Channel in combination - 4-wire 64 kbps - per mile			UNCDX	1L5XX	0.0167										
	Interoffice Channel in combination - 4-wire 64 kbps - Facility Termination			UNCDX	U1TD6	16.76	40.63	27.47	16.77	6.91						
	Interoffice Channel in combination - DS1 - per mile			UNC1X	1L5XX	0.0167										
	Interoffice Channel in combination - DS1 Facility Termination			UNC1X	U1TF1	77.14	89.47	81.99	16.39	14.48						
	Interoffice Channel in combination - DS3 - per mile			UNC3X	1L5XX	8.02										
	Interoffice Channel in combination - DS3 - Facility Termination			UNC3X	U1TF3	880.65	279.37	163.12	60.33	58.59						
	Interoffice Channel in combination - STS-1 - per mile			UNCSX	1L5XX	8.02										
	Interoffice Channel in combination - STS-1 Facility Termination			UNCSX	U1TFS	880.55	279.37	163.12	60.33	58.59						
ADDITIONAL NETWORK ELEMENTS																
	Optional Features & Functions:															
	Clear Channel Capability Extended Frame Option - per DS1	I		U1TD1, ULDD1,UNC1X	CCOEF		0.00									
	Clear Channel Capability Super FrameOption - per DS1	I		U1TD1, ULDD1,UNC1X	CCOSF		0.00									
	Clear Channel Capability (SF/ESF) Option - Subsequent Activity - per DS1	I		ULDD1, U1TD1, UNC1X, USL	NRCCC		185.26	23.86	1.99	0.78						
	C-bit Parity Option - Subsequent Activity - per DS3	i		U1TD3, ULDD3, UE3, UNC3X	NRCC3		219.58	7.69	0.737	0.00						
	DS1/DS0 Channel System			UNC1X	MQ1	107.57	91.24	62.71	10.56	9.81						
	DS3/DS1Channel System			UNC3X	MQ3	144.02	178.54	94.18	33.33	31.90						
	Voice Grade COCI in combination			UNCVX	1D1VG	0.56	6.59	4.73								
	Voice Grade COCI - for Local Loop			UEA	1D1VG	0.56	6.59	4.73								
	Voice Grade COCI - for connection to a channelized DS1 Local Channel in the same SWC as collocation			U1TUC	1D1VG	0.56	6.59	4.73								
	OCU-DP COCI (2.4-64kbs) in combination			UNCDX	1D1DD	1.19	6.59	4.73								
	OCU-DP COCI (2.4-64kbs) - for Local Loop			UDL	1D1DD	1.19	6.59	4.73								
	OCU-DP COCI (2.4-64kbs) - for connection to a channelized DS1 Local Channel in the same SWC as collocation			U1TUD	1D1DD	1.19	6.59	4.73								
	2-wire ISDN COCI (BRITE) in combination			UNCNX	UC1CA	2.56	6.59	4.73								
	2-wire ISDN COCI (BRITE) - for Local Loop			UDN	UC1CA	2.56	6.59	4.73								
	2-wire ISDN COCI (BRITE) - for connection to a channelized DS1 Local Channel in the same SWC as collocation			U1TUB	UC1CA	2.56	6.59	4.73								
	DS1 COCI in combination			UNC1X	UC1D1	8.64	6.59	4.73								
	DS1 COCI - for Local Loop			USL	UC1D1	8.64	6.59	4.73								
	DS1 COCI - for connection to a channelized DS1 Local Channel in the same SWC as collocation			U1TUA	UC1D1	8.64	6.59	4.73								

CATEGORY	RATE ELEMENTS	Interim	Zone	BCS	USOC	RATES($)					Svc Order Submitted Elec per LSR	Svc Order Submitted Manually per LSR	Incremental Charge - Manual Svc Order vs. Electronic-1st	Incremental Charge - Manual Svc Order vs. Electronic-Add'l	Incremental Charge - Manual Svc Order vs. Electronic-Disc 1st	Incremental Charge - Manual Svc Order vs. Electronic-Disc Add'l
						Rec	Nonrecurring		Nonrecurring Disconnect		OSS Rates($)					
							First	Add'l	First	Add'l	SOMEC	SOMAN	SOMAN	SOMAN	SOMAN	SOMAN
	DS1 COCI - for Interoffice Channel			U1TD1	UC1D1	8.64	6.59	4.73								
	DS1 COCI - for Local Channel			ULDD1	UC1D1	8.64	6.59	4.73								
	Wholesale - UNE, Switch-As-Is Conversion Charge			UNCVX, UNCDX, UNC1X, UNC3X, UNCSX, UDFCX, XDH1X, HFQC6, XDD2X, XDV6X, XDDFX, XDD4X, HFRST	UNCCC		5.61	5.61								
	Unbundled Misc Rate Element, SNE SAI, Single Network Element - Switch As Is Non-recurring Charge, per circuit (LSR)			U1TVX, U1TDX, U1TD1, U1TD3, U1TS1, UDF, UE3	URESL		40.27	13.52								
	Unbundled Misc Rate Element, SNE SAI, Single Network Element - Switch As Is Non-recurring Charge, incremental charge per circuit on a spreadsheet			U1TVX, U1TDX, U1TD1, U1TD3, U1TS1, UDF, UE3	URESP		23.80	12.11								
Access to DCS - Customer Reconfiguration (FlexServ)																
	Customer Reconfiguration Establishment						1.48		1.85							
	DS1 DCS Termination with DS0 Switching					27.96	25.60	19.70	16.67	13.41						
	DS1 DCS Termination with DS1 Switching					12.67	18.51	12.61	12.24	8.98						
	DS3 DCS Termination with DS1 Switching					176.51	25.60	19.70	16.67	13.41						
Node (SynchroNet)																
	Node per month			UNCDX	UNCNT	14.55										
Service Rearrangements																
	NRC - Change in Facility Assignment per circuit Service Rearrangement	I		U1TVX, U1TDX, UEA, UDL, U1TUC, U1TUD, U1TUB, ULDVX, ULDDX, UNCVX, UNCDX, UNC1X	URETD		101.30	43.13								
	NRC - Change in Facility Assignment per circuit Project Management (added to CFA per circuit if project managed)	I		U1TVX, U1TDX, UEA, UDL, U1TUC, U1TUD, U1TUB, ULDVX, ULDDX, UNCVX, UNCDX, UNC1X	URETB		3.66	3.66								
	NRC - Order Coordination Specific Time - Dedicated Transport	I		UNC1X, UNC3X	OCOSR		18.90	18.90								
	UNE Reconfiguration Change Charge per Circuit	I		UNC1X	URERC		35.00	35.00								
	UNE Reconfiguration Change Charge per Circuit Project Managed	I		UNC1X	URERP		3.66	3.66								
COMMINGLING																
	Commingling Authorization			UNCVX, UNCDX, UNC1X, UNC3X, UNCSX, U1TD1, U1TD3, U1TS1, UE3, UDLSX, U1TVX, U1TDX, U1TUB, ULDVX, ULDD1, ULDD3, ULDS1	CMGAU	0.00	0.00	0.00	0.00	0.00						
Commingled (UNE part of single bandwidth circuit)																
	Commingled VG COCI			XDV2X, NTCVG	1D1VG	0.56	6.59	4.73								
	Commingled Digital COCI			XDV6X, NTCUD	1D1DD	1.19	6.59	4.73								
	Commingled ISDN COCI			XDD4X	UC1CA	2.56	6.59	4.73								
	Commingled 2-wire VG Interoffice Channel Facility Termination			XDV2X	U1TV2	24.30	40.63	27.47	16.77	6.91						
	Commingled 4-wire VG Interoffice Channel Facility Termination			XDV6X	U1TV4	21.29	40.63	27.47	16.77	6.91						
	Commingled 56kbps Interoffice Channel Facility Termination			XDD4X	U1TD5	16.76	40.63	27.47	16.77	6.91						
	Commingled 64kbps Interoffice Channel Facility Termination			XDD4X	U1TD6	16.76	40.63	27.47	16.77	6.91						
	Commingled VG/DS0 Interoffice Channel per mile			XDV2X, XDV6X, XDD4X	1L5XX	0.0167										

UNBUNDLED NETWORK ELEMENTS - South Carolina														Attachment: 2 Exh A			
CATEGORY		RATE ELEMENTS	Interim	Zone	BCS	USOC	RATES($)					Svc Order Submitted Elec per LSR	Svc Order Submitted Manually per LSR	Incremental Charge - Manual Svc Order vs. Electronic-1st	Incremental Charge - Manual Svc Order vs. Electronic-Add'l	Incremental Charge - Manual Svc Order vs. Electronic-Disc 1st	Incremental Charge - Manual Svc Order vs. Electronic-Disc Add'l
							Rec	Nonrecurring		Nonrecurring Disconnect		OSS Rates($)					
								First	Add'l	First	Add'l	SOMEC	SOMAN	SOMAN	SOMAN	SOMAN	SOMAN
		Commingled 2-wire Local Loop Zone 1		1	XDV2X	UEAL2	16.68	105.98	68.43	53.05	10.61						
		Commingled 2-wire Local Loop Zone 2		2	XDV2X	UEAL2	23.13	105.98	68.43	53.05	10.61						
		Commingled 2-wire Local Loop Zone 3		3	XDV2X	UEAL2	28.46	105.98	68.43	53.05	10.61						
		Commingled 4-wire Local Loop Zone 1		1	XDV6X	UEAL4	32.59	132.38	94.83	59.35	14.61						
		Commingled 4-wire Local Loop Zone 2		2	XDV6X	UEAL4	43.89	132.38	94.83	59.35	14.61						
		Commingled 4-wire Local Loop Zone 3		3	XDV6X	UEAL4	43.38	132.38	94.83	59.35	14.61						
		Commingled 56kbps Local Loop Zone 1		1	XDD4X	UDL56	29.93	126.66	89.12	59.35	14.61						
		Commingled 56kbps Local Loop Zone 2		2	XDD4X	UDL56	33.99	126.66	89.12	59.35	14.61						
		Commingled 56kbps Local Loop Zone 3		3	XDD4X	UDL56	34.74	126.66	89.12	59.35	14.61						
		Commingled 64kbps Local Loop Zone 1		1	XDD4X	UDL64	29.93	126.66	89.12	59.35	14.61						
		Commingled 64kbps Local Loop Zone 2		2	XDD4X	UDL64	33.99	126.66	89.12	59.35	14.61						
		Commingled 64kbps Local Loop Zone 3		3	XDD4X	UDL64	34.74	126.66	89.12	59.35	14.61						
		Commingled ISDN Local Loop Zone 1		1	XDD4X	U1L2X	25.21	117.58	80.03	53.05	10.61						
		Commingled ISDN Local Loop Zone 2		2	XDD4X	U1L2X	32.76	117.58	80.03	53.05	10.61						
		Commingled ISDN Local Loop Zone 3		3	XDD4X	U1L2X	37.70	117.58	80.03	53.05	10.61						
		Commingled DS1 COCI			XDH1X, NTCD1	UC1D1	8.64	6.59	4.73								
		Commingled DS1 Interoffice Channel Facility Termination			XDH1X	U1TF1	77.14	89.47	81.99	16.39	14.48						
		Commingled DS1 Interoffice Channel per mile			XDH1X	1L5XX	0.0167										
		Commingled DS1/DS0 Channel System			XDH1X	MQ1	107.57	91.24	62.71	10.56	9.81						
		Commingled DS1 Local Loop Zone 1		1	XDH1X	USLXX	79.51	253.03	157.89	44.80	11.73						
		Commingled DS1 Local Loop Zone 2		2	XDH1X	USLXX	136.00	253.03	157.89	44.80	11.73						
		Commingled DS1 Local Loop Zone 3		3	XDH1X	USLXX	229.15	253.03	157.89	44.80	11.73						
		Commingled DS3 Local Loop Facility Termination			HFQC6	UE3PX	306.36	452.52	264.53	119.75	83.77						
		Commingled DS3/STS-1 Local Loop per mile			HFQC6, HFRST	1L5ND	12.26										
		Commingled STS-1 Local Loop Facility Termination			HFRST	UDLS1	313.49	452.52	264.53	119.75	83.77						
		Commingled DS3/DS1 Channel System			HFQC6	MQ3	144.02	178.54	94.18	33.33	31.90						
		Commingled DS3 Interoffice Channel Facility Termination			HFQC6	U1TF3	880.65	279.37	163.12	60.33	58.59						
		Commingled DS3 Interoffice Channel per mile			HFQC6	1L5XX	8.02										
		Commingled STS-1Interoffice Channel Facility Termination			HFRST	U1TFS	880.55	279.37	163.12	60.33	58.59						
		Commingled STS-1Interoffice Channel per mile			HFRST	1L5XX	8.02										
		Commingled Dark Fiber - Interoffice Transport, Per Four Fiber Strands, Per Route Mile Or Fraction Thereof			HEQDL	1L5DF	36.41										
		Commingled Dark Fiber - Interoffice Transport, Per Four Fiber Strands, Per Route Mile Or Fraction Thereof			HEQDL	UDF14		640.51	138.17	317.76	198.11						
		UNE to Commingled Conversion Tracking			XDH1X, HFQC6	CMGUN	0.00	0.00	0.00	0.00	0.00						
		SPA to Commingled Conversion Tracking			XDH1X, HFQC6	CMGSP	0.00	0.00	0.00	0.00	0.00						
LNP Query Service																	
		LNP Charge Per query					0.0008837										
		LNP Service Establishment Manual						25.09	25.09	23.07	23.07						
		LNP Service Provisioning with Point Code Establishment						594.82	303.88	269.53	198.18						
911 PBX LOCATE																	
	911 PBX LOCATE DATABASE CAPABILITY																
		Service Establishment per CLEC per End User Account			9PBDC	9PBEU		1,813.00									
		Changes to TN Range or Customer Profile			9PBDC	9PBTN		181.40									
		Per Telephone Number (Monthly)			9PBDC	9PBMM	0.07										
		Change Company (Service Provider) ID			9PBDC	9PBPC		532.48									
		PBX Locate Service Support per CLEC (Monthlt)			9PBDC	9PBMR	181.29										
		Service Order Charge			9PBDC	9PBSC		15.69									
	911 PBX LOCATE TRANSPORT COMPONENT																
	See Att 3																
	Note: Rates displaying an "I" in Interim column are interim as a result of a Commission order.																

UNBUNDLED NETWORK ELEMENTS - Tennessee														Attachment 2 Exh A:			
CATEGORY	RATE ELEMENTS	Interim	Zone	BCS	USOC	RATES($)					Svc Order Submitted Elec per LSR	Svc Order Submitted Manually per LSR	Incremental Charge - Manual Svc Order vs. Electronic-1st	Incremental Charge - Manual Svc Order vs. Electronic-Add'l	Incremental Charge - Manual Svc Order vs. Electronic-Disc 1st	Incremental Charge - Manual Svc Order vs. Electronic-Disc Add'l
							Nonrecurring		Nonrecurring Disconnect		OSS Rates($)					
						Rec	First	Add'l	First	Add'l	SOMEC	SOMAN	SOMAN	SOMAN	SOMAN	SOMAN
	The "Zone" shown in the sections for stand-alone loops or loops as part of a combination refers to Geographically Deaveraged UNE Zones. To view Geographically Deaveraged UNE Zone Designations by Central Office, refer to internet Website: http://www.interconnection.bellsouth.com/become_a_clec/html/interconnection.htm															
OPERATIONS SUPPORT SYSTEMS (OSS) - "REGIONAL RATES"																
	NOTE: (1) CLEC should contact its contract negotiator if it prefers the "state specific" OSS charges as ordered by the State Commissions. The OSS charges currently contained in this rate exhibit are the BellSouth "regional" service ordering charges. CLEC may elect either the state specific Commission ordered rates for the service ordering charges, or CLEC may elect the regional service ordering charge, however, CLEC can not obtain a mixture of the two regardless if CLEC has a interconnection contract established in															
	NOTE: (2) Any element that can be ordered electronically will be billed according to the SOMEC rate listed in this category. Please refer to BellSouth's Local Ordering Handbook (LOH) to determine if a product can be ordered electronically. For those elements that cannot be ordered electronically at present per the LOH, the listed SOMEC rate in this category reflects the charge that would be billed to a CLEC once electronic ordering capabilities come on-line for that element. Otherwise, the manual ordering charge,															
	NOTE: (3) OSS - Manual Service Order Charge, Per Element - UNE Only **Please see applicable rate element for SOMAN charge**															
	OSS - Electronic Service Order Charge, Per Local Service Request (LSR) - UNE Only				SOMEC		3.50	0.00	3.50	0.00						
UNE SERVICE DATE ADVANCEMENT CHARGE																
	NOTE: The Expedite charge will be maintained commensurate with BellSouth's FCC No.1 Tariff, Section 5 as applicable.															
	UNE Expedite Charge per Circuit or Line Assignable USOC, per Day			UAL, UEANL, UCL, UEF, UDF, UEQ, UDL, UENTW, UDN, UEA, UHL, ULC, USL, U1T12, U1T48, U1TD1, U1TD3, U1TDX, U1TO3, U1TS1, U1TVX, UC1BC, UC1BL, UC1CC, UC1CL, UC1DC, UC1DL, UC1EC, UC1EL, UC1FC, UC1FL, UC1GC, UC1GL, UC1HC, UC1HL, UDL12, UDL48, UDLO3, UDLSX, UE3, ULD12, ULD48, ULDD1, ULDD3, ULDDX, ULDO3, ULDS1, ULDVX, UNC1X, UNC3X, UNCDX, UNCNX, UNCSX, UNCVX, UNLD1, UNLD3, UXTD1, UXTD3, UXTS1, U1TUC, U1TUD, U1TUB, U1TUA,NTCVG, NTCUD, NTCD1	SDASP		200.00									
ORDER MODIFICATION CHARGE																
	Order Modification Charge (OMC)						26.21	0.00	0.00	0.00						
	Order Modification Additional Dispatch Charge (OMCAD)						150.00	0.00	0.00	0.00						
UNBUNDLED EXCHANGE ACCESS LOOP																
	2-WIRE ANALOG VOICE GRADE LOOP															
	2-Wire Analog Voice Grade Loop - Service Level 2 w/Loop or Ground Start Signaling - Zone 1		1	UEA	UEAL2	14.74	75.06	48.20	28.70	17.64			20.35	10.54	13.32	13.32
	2-Wire Analog Voice Grade Loop - Service Level 2 w/Loop or Ground Start Signaling - Zone 2		2	UEA	UEAL2	22.08	75.06	48.20	28.70	17.64			20.35	10.54	13.32	13.32
	2-Wire Analog Voice Grade Loop - Service Level 2 w/Loop or Ground Start Signaling - Zone 3		3	UEA	UEAL2	36.87	75.06	48.20	28.70	17.64			20.35	10.54	13.32	13.32
	2-Wire Analog Voice Grade Loop - Service Level 2 w/Reverse Battery Signaling - Zone 1		1	UEA	UEAR2	14.74	75.06	48.20	28.70	17.64			20.35	10.54	13.32	13.32
	2-Wire Analog Voice Grade Loop - Service Level 2 w/Reverse Battery Signaling - Zone 2		2	UEA	UEAR2	22.08	75.06	48.20	28.70	17.64			20.35	10.54	13.32	13.32

UNBUNDLED NETWORK ELEMENTS - Tennessee														Attachment 2 Exh A:			
CATEGORY		RATE ELEMENTS	Interim	Zone	BCS	USOC	RATES($)					Svc Order Submitted Elec per LSR	Svc Order Submitted Manually per LSR	Incremental Charge - Manual Svc Order vs. Electronic-1st	Incremental Charge - Manual Svc Order vs. Electronic-Add'l	Incremental Charge - Manual Svc Order vs. Electronic-Disc 1st	Incremental Charge - Manual Svc Order vs. Electronic-Disc Add'l
								Nonrecurring		Nonrecurring Disconnect		OSS Rates($)					
							Rec	First	Add'l	First	Add'l	SOMEC	SOMAN	SOMAN	SOMAN	SOMAN	SOMAN
		2-Wire Analog Voice Grade Loop - Service Level 2 w/Reverse Battery Signaling - Zone 3		3	UEA	UEAR2	36.87	75.06	48.20	28.70	17.64			20.35	10.54	13.32	13.32
		Switch-As-Is Conversion rate per UNE Loop, Single LSR, (per DS0)			UEA	URESL		23.42	3.30					20.35	10.54	13.32	13.32
		Switch-As-Is Conversion rate per UNE Loop, Spreadsheet, (per DS0)			UEA	URESP		24.82	4.70								
		CLEC to CLEC Conversion Charge without outside dispatch			UEA	UREWO		75.06	36.41					20.35	10.54	13.32	13.32
		Loop Tagging - Service Level 2 (SL2)			UEA	URETL		11.23	1.10								
	4-WIRE ANALOG VOICE GRADE LOOP																
		4-Wire Analog Voice Grade Loop - Zone 1		1	UEA	UEAL4	21.98	122.76	85.57	76.35	39.16			20.35	10.54	13.32	13.32
		4-Wire Analog Voice Grade Loop - Zone 2		2	UEA	UEAL4	32.93	122.76	85.57	76.35	39.16			20.35	10.54	13.32	13.32
		4-Wire Analog Voice Grade Loop - Zone 3		3	UEA	UEAL4	54.99	122.76	85.57	76.35	39.16			20.35	10.54	13.32	13.32
		Switch-As-Is Conversion rate per UNE Loop, Single LSR, (per DS0)			UEA	URESL		23.42	3.30					20.35	10.54	13.32	13.32
		Switch-As-Is Conversion rate per UNE Loop, Spreadsheet, (per DS0)			UEA	URESP		24.82	4.70								
		CLEC to CLEC Conversion Charge without outside dispatch			UEA	UREWO		75.06	36.41					20.35	10.54	13.32	13.32
	2-WIRE ISDN DIGITAL GRADE LOOP																
		2-Wire ISDN Digital Grade Loop - Zone 1		1	UDN	U1L2X	19.77	142.76	88.88	76.35	39.16			20.35	10.54	13.32	13.32
		2-Wire ISDN Digital Grade Loop - Zone 2		2	UDN	U1L2X	29.63	142.76	88.88	76.35	39.16			20.35	10.54	13.32	13.32
		2-Wire ISDN Digital Grade Loop - Zone 3		3	UDN	U1L2X	49.47	142.76	88.88	76.35	39.16			20.35	10.54	13.32	13.32
		CLEC to CLEC Conversion Charge without outside dispatch			UDN	UREWO		91.77	44.22					20.35	10.54	13.32	13.32
	2-WIRE ASYMMETRICAL DIGITAL SUBSCRIBER LINE (ADSL) COMPATIBLE LOOP																
		2 Wire Unbundled ADSL Loop including manual service inquiry & facility reservation - Zone 1		1	UAL	UAL2X	12.30	156.95	64.54	89.64	16.93			20.35	10.54	13.32	13.32
		2 Wire Unbundled ADSL Loop including manual service inquiry & facility reservation - Zone 2		2	UAL	UAL2X	18.43	156.95	64.54	89.64	16.93			20.35	10.54	13.32	13.32
		2 Wire Unbundled ADSL Loop including manual service inquiry & facility reservation - Zone 3		3	UAL	UAL2X	30.77	156.95	64.54	89.64	16.93			20.35	10.54	13.32	13.32
		2 Wire Unbundled ADSL Loop without manual service inquiry & facility reservaton - Zone 1		1	UAL	UAL2W	12.30	89.40	35.91	72.02	11.48			20.35	10.54	13.32	13.32
		2 Wire Unbundled ADSL Loop without manual service inquiry & facility reservaton - Zone 2		2	UAL	UAL2W	18.43	89.40	35.91	72.02	11.48			20.35	10.54	13.32	13.32
		2 Wire Unbundled ADSL Loop without manual service inquiry & facility reservaton - Zone 3		3	UAL	UAL2W	30.77	89.40	35.91	72.02	11.48			20.35	10.54	13.32	13.32
		CLEC to CLEC Conversion Charge without outside dispatch			UAL	UREWO		31.99	20.02					20.35	10.54	13.32	13.32
	2-WIRE HIGH BIT RATE DIGITAL SUBSCRIBER LINE (HDSL) COMPATIBLE LOOP																
		2 Wire Unbundled HDSL Loop including manual service inquiry & facility reservation - Zone 1		1	UHL	UHL2X	9.64	158.94	65.20	89.64	16.93			20.35	10.54	13.32	13.32
		2 Wire Unbundled HDSL Loop including manual service inquiry & facility reservation - Zone 2		2	UHL	UHL2X	14.44	158.94	65.20	89.64	16.93			20.35	10.54	13.32	13.32
		2 Wire Unbundled HDSL Loop including manual service inquiry & facility reservation - Zone 3		3	UHL	UHL2X	24.12	158.94	65.20	89.64	16.93			20.35	10.54	13.32	13.32
		2 Wire Unbundled HDSL Loop without manual service inquiry and facility reservation - Zone 1		1	UHL	UHL2W	9.64	89.40	35.91	72.02	11.48			20.35	10.54	13.32	13.32
		2 Wire Unbundled HDSL Loop without manual service inquiry and facility reservation - Zone 2		2	UHL	UHL2W	14.44	89.40	35.91	72.02	11.48			20.35	10.54	13.32	13.32
		2 Wire Unbundled HDSL Loop without manual service inquiry and facility reservation - Zone 3		3	UHL	UHL2W	24.12	89.40	35.91	72.02	11.48			20.35	10.54	13.32	13.32
		CLEC to CLEC Conversion Charge without outside dispatch			UHL	UREWO		31.99	20.02					20.35	10.54	13.32	13.32
	4-WIRE HIGH BIT RATE DIGITAL SUBSCRIBER LINE (HDSL) COMPATIBLE LOOP																
		4 Wire Unbundled HDSL Loop including manual service inquiry and facility reservation - Zone 1		1	UHL	UHL4X	12.40	169.62	75.89	39.73	19.53			20.35	10.54	13.32	13.32
		4-Wire Unbundled HDSL Loop including manual service inquiry and facility reservation - Zone 2		2	UHL	UHL4X	18.58	169.62	75.89	39.73	19.53			20.35	10.54	13.32	13.32
		4-Wire Unbundled HDSL Loop including manual service inquiry and facility reservation - Zone 3		3	UHL	UHL4X	31.03	169.62	75.89	39.73	19.53			20.35	10.54	13.32	13.32
		4-Wire Unbundled HDSL Loop without manual service inquiry and facility reservation - Zone 1		1	UHL	UHL4W	12.40	100.09	46.60	75.75	13.97			20.35	10.54	13.32	13.32

UNBUNDLED NETWORK ELEMENTS - Tennessee														Attachment 2 Exh A:			
CATEGORY		RATE ELEMENTS	Interim	Zone	BCS	USOC	RATES($)					Svc Order Submitted Elec per LSR	Svc Order Submitted Manually per LSR	Incremental Charge - Manual Svc Order vs. Electronic-1st	Incremental Charge - Manual Svc Order vs. Electronic-Add'l	Incremental Charge - Manual Svc Order vs. Electronic-Disc 1st	Incremental Charge - Manual Svc Order vs. Electronic-Disc Add'l
								Nonrecurring		Nonrecurring Disconnect		OSS Rates($)					
							Rec	First	Add'l	First	Add'l	SOMEC	SOMAN	SOMAN	SOMAN	SOMAN	SOMAN
		4-Wire Unbundled HDSL Loop without manual service inquiry and facility reservation - Zone 2		2	UHL	UHL4W	18.58	100.09	46.60	75.75	13.97			20.35	10.54	13.32	13.32
		4-Wire Unbundled HDSL Loop without manual service inquiry and facility reservation - Zone 3		3	UHL	UHL4W	31.03	100.09	46.60	75.75	13.97			20.35	10.54	13.32	13.32
		CLEC to CLEC Conversion Charge without outside dispatch			UHL	UREWO		31.99	20.02					20.35	10.54	13.32	13.32
	4-WIRE DS1 DIGITAL LOOP																
		4-Wire DS1 Digital Loop - Zone 1		1	USL	USLXX	51.38	313.08	219.72	96.86	40.45			18.98	8.43	11.95	11.95
		4-Wire DS1 Digital Loop - Zone 2		2	USL	USLXX	76.98	313.08	219.72	96.86	40.45			18.98	8.43	11.95	11.95
		4-Wire DS1 Digital Loop - Zone 3		3	USL	USLXX	128.54	313.08	219.72	96.86	40.45			18.98	8.43	11.95	11.95
		Switch-As-Is Conversion rate per UNE Loop, Single LSR, (per DS1)			USL	URESL		23.42	3.30								
		Switch-As-Is Conversion rate per UNE Loop, Spreadsheet, (per DS1)			USL	URESP		24.82	4.70								
		CLEC to CLEC Conversion Charge without outside dispatch			USL	UREWO		130.47	40.11					20.35	10.54	13.32	13.32
	4-WIRE 19.2, 56 OR 64 KBPS DIGITAL GRADE LOOP																
		4 Wire Unbundled Digital Loop 2.4 Kbps - Zone 1		1	UDL	UDL2X	27.68	207.01	141.38	90.70	44.18						
		4 Wire Unbundled Digital Loop 2.4 Kbps - Zone 2		2	UDL	UDL2X	41.47	207.01	141.38	90.70	44.18						
		4 Wire Unbundled Digital Loop 2.4 Kbps - Zone3		3	UDL	UDL2X	69.24	207.01	141.38	90.70	44.18						
		4 Wire Unbundled Digital Loop 4.8 Kbps -Zone 1		1	UDL	UDL4X	27.68	207.01	141.38	90.70	44.18						
		4 Wire Unbundled Digital Loop 4.8 Kbps - Zone 2		2	UDL	UDL4X	41.47	207.01	141.38	90.70	44.18						
		4 Wire Unbundled Digital Loop 4.8 Kbps - Zone 3		3	UDL	UDL4X	69.24	207.01	141.38	90.70	44.18						
		4 Wire Unbundled Digital Loop 9.6 Kbps - Zone 1		1	UDL	UDL9X	27.68	207.01	141.38	90.70	44.18						
		5 Wire Unbundled Digital Loop 9.6 Kbps - Zone 2		2	UDL	UDL9X	41.47	207.01	141.38	90.70	44.18						
		6 Wire Unbundled Digital Loop 9.6 Kbps - Zone 3		3	UDL	UDL9X	69.24	207.01	141.38	90.70	44.18						
		4 Wire Unbundled Digital 19.2 Kbps - Zone 1		1	UDL	UDL19	27.68	207.01	141.38	90.70	44.18			20.35	10.54	13.32	13.32
		4 Wire Unbundled Digital 19.2 Kbps - Zone 2		2	UDL	UDL19	41.47	207.01	141.38	90.70	44.18			20.35	10.54	13.32	13.32
		4 Wire Unbundled Digital 19.2 Kbps - Zone 3		3	UDL	UDL19	69.24	207.01	141.38	90.70	44.18			20.35	10.54	13.32	13.32
		4 Wire Unbundled Digital Loop 56 Kbps - Zone 1		1	UDL	UDL56	27.68	207.01	141.38	90.70	44.18			20.35	10.54	13.32	13.32
		4 Wire Unbundled Digital Loop 56 Kbps - Zone 2		2	UDL	UDL56	41.47	207.01	141.38	90.70	44.18			20.35	10.54	13.32	13.32
		4 Wire Unbundled Digital Loop 56 Kbps - Zone 3		3	UDL	UDL56	69.24	207.01	141.38	90.70	44.18			20.35	10.54	13.32	13.32
		4 Wire Unbundled Digital Loop 64 Kbps - Zone 1		1	UDL	UDL64	27.68	207.01	141.38	90.70	44.18			20.35	10.54	13.32	13.32
		4 Wire Unbundled Digital Loop 64 Kbps - Zone 2		2	UDL	UDL64	41.47	207.01	141.38	90.70	44.18			20.35	10.54	13.32	13.32
		4 Wire Unbundled Digital Loop 64 Kbps - Zone 3		3	UDL	UDL64	69.24	207.01	141.38	90.70	44.18			20.35	10.54	13.32	13.32
		Switch-As-Is Conversion rate per UNE Loop, Single LSR, (per DS0)			UDL	URESL		23.42	3.30					20.35	10.54	13.32	13.32
		Switch-As-Is Conversion rate per UNE Loop, Spreadsheet, (per DS0)			UDL	URESP		24.82	4.70								
		CLEC to CLEC Conversion Charge without outside dispatch			UDL	UREWO		102.28	49.82					20.35	10.54	13.32	13.32
	2-WIRE Unbundled COPPER LOOP																
		2-Wire Unbundled Copper Loop-Designed including manual service inquiry & facility reservation - Zone 1		1	UCL	UCLPB	11.74	31.99	20.02	10.65	1.41			20.35	10.54	13.32	13.32
		2-Wire Unbundled Copper Loop-Designed including manual service inquiry & facility reservation - Zone 2		2	UCL	UCLPB	17.59	31.99	20.02	10.65	1.41			20.35	10.54	13.32	13.32
		2 Wire Unbundled Copper Loop-Designed including manual service inquiry & facility reservation - Zone 3		3	UCL	UCLPB	29.37	31.99	20.02	10.65	1.41			20.35	10.54	13.32	13.32
		2-Wire Unbundled Copper Loop-Designed without manual service inquiry and facility reservation - Zone 1		1	UCL	UCLPW	11.74	31.99	20.02	10.65	1.41			20.35	10.54	13.32	13.32
		2-Wire Unbundled Copper Loop-Designed without manual service inquiry and facility reservation - Zone 2		2	UCL	UCLPW	17.59	31.99	20.02	10.65	1.41			20.35	10.54	13.32	13.32
		2-Wire Unbundled Copper Loop-Designed without manual service inquiry and facility reservation - Zone 3		3	UCL	UCLPW	29.37	31.99	20.02	10.65	1.41			20.35	10.54	13.32	13.32
		Order Coordination for Unbundled Copper Loops (per loop)			UCL	UCLMC		36.52	36.52								
		CLEC to CLEC Conversion Charge without outside dispatch (UCL-Des)			UCL	UREWO		31.99	20.02					20.35	10.54	13.32	13.32
	4-WIRE COPPER LOOP																
		4-Wire Copper Loop-Designed including manual service inquiry and facility reservation - Zone 1		1	UCL	UCL4S	21.98	122.76	85.57	76.35	39.16			20.35	10.54	13.32	13.32
		4-Wire Copper Loop-Designed including manual service inquiry and facility reservation - Zone 2		2	UCL	UCL4S	32.93	122.76	85.57	76.35	39.16			20.35	10.54	13.32	13.32

UNBUNDLED NETWORK ELEMENTS - Tennessee														Attachment 2 Exh A:			
CATEGORY		RATE ELEMENTS	Interim	Zone	BCS	USOC	RATES($)					Svc Order Submitted Elec per LSR	Svc Order Submitted Manually per LSR	Incremental Charge - Manual Svc Order vs. Electronic-1st	Incremental Charge - Manual Svc Order vs. Electronic-Add'l	Incremental Charge - Manual Svc Order vs. Electronic-Disc 1st	Incremental Charge - Manual Svc Order vs. Electronic-Disc Add'l
								Nonrecurring		Nonrecurring Disconnect		OSS Rates($)					
							Rec	First	Add'l	First	Add'l	SOMEC	SOMAN	SOMAN	SOMAN	SOMAN	SOMAN
		4-Wire Copper Loop-Designed including manual service inquiry and facility reservation - Zone 3		3	UCL	UCL4S	54.99	122.76	85.57	76.35	39.16			20.35	10.54	13.32	13.32
		4-Wire Copper Loop-Designed without manual service inquiry and facility reservation - Zone 1		1	UCL	UCL4W	21.98	122.76	85.57	76.35	39.16			20.35	10.54	13.32	13.32
		4-Wire Copper Loop-Designed without manual service inquiry and facility reservation - Zone 2		2	UCL	UCL4W	32.93	122.76	85.57	76.35	39.16			20.35	10.54	13.32	13.32
		4-Wire Copper Loop-Designed without manual service inquiry and facility reservation - Zone 3		3	UCL	UCL4W	54.99	122.76	85.57	76.35	39.16			20.35	10.54	13.32	13.32
		Order Coordination for Unbundled Copper Loops (per loop)			UCL	UCLMC		36.52	36.52								
		CLEC to CLEC Conversion Charge without outside dispatch (UCL-Des)			UCL	UREWO		31.99	20.02					20.35	10.54	13.32	13.32
		Order Coordination for Specified Conversion Time (per LSR)			UEA, UDN, UAL, UHL, UDL, USL	OCOSL		34.29									
	Rearrangements																
		EEL to UNE-L Retermination, per 2 Wire Unbundled Voice Loop-SL2			UEA	UREEL		75.06	36.41								
		EEL to UNE-L Retermination, per 4 Wire Unbundled Voice Loop			UEA	UREEL		75.06	36.41								
		EEL to UNE-L Retermination, per 2 Wire ISDN Loop			UDN	UREEL		91.77	44.22								
		EEL to UNE-L Retermination, per 4 Wire Unbundled Digital Loop			UDL	UREEL		102.28	49.82								
		EEL to UNE-L Retermination, per 4 Wire Unbundled DS1 Loop			USL	UREEL		130.47	40.11								
UNE LOOP COMMINGLING																	
	2-WIRE ANALOG VOICE GRADE LOOP - COMMINGLING																
		2-Wire Analog Voice Grade Loop - Service Level 2 w/Loop or Ground Start Signaling - Zone 1		1	NTCVG	UEAL2	14.74	75.06	48.20	28.70	17.64						
		2-Wire Analog Voice Grade Loop - Service Level 2 w/Loop or Ground Start Signaling - Zone 2		2	NTCVG	UEAL2	22.08	75.06	48.20	28.70	17.64						
		2-Wire Analog Voice Grade Loop - Service Level 2 w/Loop or Ground Start Signaling - Zone 3		3	NTCVG	UEAL2	36.87	75.06	48.20	28.70	17.64						
		2-Wire Analog Voice Grade Loop - Service Level 2 w/Reverse Battery Signaling - Zone 1		1	NTCVG	UEAR2	14.74	75.06	48.20	28.70	17.64						
		2-Wire Analog Voice Grade Loop - Service Level 2 w/Reverse Battery Signaling - Zone 2		2	NTCVG	UEAR2	22.08	75.06	48.20	28.70	17.64						
		2-Wire Analog Voice Grade Loop - Service Level 2 w/Reverse Battery Signaling - Zone 3		3	NTCVG	UEAR2	36.87	75.06	48.20	28.70	17.64						
		Switch-As-Is Conversion rate per UNE Loop, Single LSR, (per DS0)			NTCVG	URESL		23.42	3.30								
		Switch-As-Is Conversion rate per UNE Loop, Spreadsheet, (per DS0)			NTCVG	URESP		24.82	4.70								
		CLEC to CLEC Conversion Charge without outside dispatch			NTCVG	UREWO		75.06	36.41								
		Loop Tagging - Service Level 2 (SL2)			NTCVG	URETL		11.23	1.10								
	4-WIRE ANALOG VOICE GRADE LOOP																
		4-Wire Analog Voice Grade Loop - Zone 1		1	NTCVG	UEAL4	21.98	122.76	85.57	76.35	39.16						
		4-Wire Analog Voice Grade Loop - Zone 2		2	NTCVG	UEAL4	32.93	122.76	85.57	76.35	39.16						
		4-Wire Analog Voice Grade Loop - Zone 3		3	NTCVG	UEAL4	54.99	122.76	85.57	76.35	39.16						
		Switch-As-Is Conversion rate per UNE Loop, Single LSR, (per DS0)			NTCVG	URESL		23.42	3.30								
		Switch-As-Is Conversion rate per UNE Loop, Spreadsheet, (per DS0)			NTCVG	URESP		24.82	4.70								
		CLEC to CLEC Conversion Charge without outside dispatch			NTCVG	UREWO		75.06	36.41								
	4-WIRE DS1 DIGITAL LOOP - COMMINGLING																
		4-Wire DS1 Digital Loop - Zone 1		1	NTCD1	USLXX	51.38	313.08	219.72	96.86	40.45						
		4-Wire DS1 Digital Loop - Zone 2		2	NTCD1	USLXX	76.98	313.08	219.72	96.86	40.45						
		4-Wire DS1 Digital Loop - Zone 3		3	NTCD1	USLXX	128.54	313.08	219.72	96.86	40.45						
		Switch-As-Is Conversion rate per UNE Loop, Single LSR, (per DS1)			NTCD1	URESL	0.00	23.42	3.30	0.00	0.00						
		Switch-As-Is Conversion rate per UNE Loop, Spreadsheet, (per DS1)			NTCD1	URESP	0.00	24.82	4.70	0.00	0.00						

UNBUNDLED NETWORK ELEMENTS - Tennessee														Attachment 2 Exh A:			
CATEGORY	RATE ELEMENTS	Interim	Zone	BCS	USOC	RATES($)					Svc Order Submitted Elec per LSR	Svc Order Submitted Manually per LSR	Incremental Charge - Manual Svc Order vs. Electronic-1st	Incremental Charge - Manual Svc Order vs. Electronic-Add'l	Incremental Charge - Manual Svc Order vs. Electronic-Disc 1st	Incremental Charge - Manual Svc Order vs. Electronic-Disc Add'l
							Nonrecurring		Nonrecurring Disconnect		OSS Rates($)					
						Rec	First	Add'l	First	Add'l	SOMEC	SOMAN	SOMAN	SOMAN	SOMAN	SOMAN
	CLEC to CLEC Conversion Charge without outside dispatch			NTCD1	UREWO	0.00	130.47	40.11	0.00	0.00						
4-WIRE 19.2, 56 OR 64 KBPS DIGITAL GRADE LOOP																
	4 Wire Unbundled Digital Loop 2.4 Kbps - Zone 1		1	NTCUD	UDL2X	27.68	207.01	141.38	90.70	44.18						
	4 Wire Unbundled Digital Loop 2.4 Kbps - Zone 2		2	NTCUD	UDL2X	41.47	207.01	141.38	90.70	44.18						
	4 Wire Unbundled Digital Loop 2.4 Kbps - Zone3		3	NTCUD	UDL2X	69.24	207.01	141.38	90.70	44.18						
	4 Wire Unbundled Digital Loop 4.8 Kbps -Zone 1		1	NTCUD	UDL4X	27.68	207.01	141.38	90.70	44.18						
	4 Wire Unbundled Digital Loop 4.8 Kbps - Zone 2		2	NTCUD	UDL4X	41.47	207.01	141.38	90.70	44.18						
	4 Wire Unbundled Digital Loop 4.8 Kbps - Zone 3		3	NTCUD	UDL4X	69.24	207.01	141.38	90.70	44.18						
	4 Wire Unbundled Digital Loop 9.6 Kbps - Zone 1		1	NTCUD	UDL9X	27.68	207.01	141.38	90.70	44.18						
	5 Wire Unbundled Digital Loop 9.6 Kbps - Zone 2		2	NTCUD	UDL9X	41.47	207.01	141.38	90.70	44.18						
	6 Wire Unbundled Digital Loop 9.6 Kbps - Zone 3		3	NTCUD	UDL9X	69.24	207.01	141.38	90.70	44.18						
	4 Wire Unbundled Digital 19.2 Kbps - Zone 1		1	NTCUD	UDL19	27.68	207.01	141.38	90.70	44.18						
	4 Wire Unbundled Digital 19.2 Kbps - Zone 2		2	NTCUD	UDL19	41.47	207.01	141.38	90.70	44.18						
	4 Wire Unbundled Digital 19.2 Kbps - Zone 3		3	NTCUD	UDL19	69.24	207.01	141.38	90.70	44.18						
	4 Wire Unbundled Digital Loop 56 Kbps - Zone 1		1	NTCUD	UDL56	27.68	207.01	141.38	90.70	44.18						
	4 Wire Unbundled Digital Loop 56 Kbps - Zone 2		2	NTCUD	UDL56	41.47	207.01	141.38	90.70	44.18						
	4 Wire Unbundled Digital Loop 56 Kbps - Zone 3		3	NTCUD	UDL56	69.24	207.01	141.38	90.70	44.18						
	4 Wire Unbundled Digital Loop 64 Kbps - Zone 1		1	NTCUD	UDL64	27.68	207.01	141.38	90.70	44.18						
	4 Wire Unbundled Digital Loop 64 Kbps - Zone 2		2	NTCUD	UDL64	41.47	207.01	141.38	90.70	44.18						
	4 Wire Unbundled Digital Loop 64 Kbps - Zone 3		3	NTCUD	UDL64	69.24	207.01	141.38	90.70	44.18						
	Switch-As-Is Conversion rate per UNE Loop, Single LSR, (per DS0)			NTCUD	URESL	0.00	23.42	3.30	0.00	0.00						
	Switch-As-Is Conversion rate per UNE Loop, Spreadsheet, (per DS0)			NTCUD	URESP	0.00	24.82	4.70	0.00	0.00						
	CLEC to CLEC Conversion Charge without outside dispatch			NTCUD	UREWO	0.00	102.28	49.82	0.00	0.00						
	Order Coordination for Specified Conversion Time (per LSR)			NTCVG, NTCUD, NTCD1	OCOSL		34.29									
UNBUNDLED EXCHANGE ACCESS LOOP																
2-WIRE ANALOG VOICE GRADE LOOP																
	2-Wire Analog Voice Grade Loop - Service Level 1- Zone 1		1	UEANL	UEAL2	11.74	31.99	20.02	10.65	1.41			20.35	10.54	13.32	13.32
	2-Wire Analog Voice Grade Loop - Service Level 1- Zone 2		2	UEANL	UEAL2	17.59	31.99	20.02	10.65	1.41			20.35	10.54	13.32	13.32
	2-Wire Analog Voice Grade Loop - Service Level 1- Zone 3		3	UEANL	UEAL2	29.37	31.99	20.02	10.65	1.41			20.35	10.54	13.32	13.32
	2-Wire Analog Voice Grade Loop - Service Level 1- Zone 1		1	UEANL	UEASL	11.74	31.99	20.02	10.65	1.41			20.35	10.54	13.32	13.32
	2-Wire Analog Voice Grade Loop - Service Level 1- Zone 2		2	UEANL	UEASL	17.59	31.99	20.02	10.65	1.41			20.35	10.54	13.32	13.32
	2-Wire Analog Voice Grade Loop - Service Level 1- Zone 3		3	UEANL	UEASL	29.37	31.99	20.02	10.65	1.41			20.35	10.54	13.32	13.32
	Tag Loop at End User Premise			UEANL	URETL		8.95	0.88								
	Loop Testing - Basic 1st Half Hour			UEANL	URET1		57.67	0.00								
	Loop Testing - Basic Additional Half Hour			UEANL	URETA		37.44	37.44								
	Manual Order Coordination for UVL-SL1s (per loop)			UEANL	UEAMC		36.52	36.52								
	Order Coordination for Specified Conversion Time for UVL-SL1 (per LSR)			UEANL	OCOSL		34.29									
	Unbundled Non-Design Voice Loop, billing for BST providing make-up (Engineering Information - E.I.)			UEANL	UEANM		25.33	25.33								
	CLEC to CLEC Conversion Charge Without Outside Dispatch (UVL-SL1)			UEANL	UREWO		15.80	8.95					20.35	10.54	13.32	13.32
2-WIRE Unbundled COPPER LOOP																
	2-Wire Unbundled Copper Loop - Non-Designed Zone 1		1	UEQ	UEQ2X	11.74	31.99	20.02	10.65	1.41			20.35	10.54	13.32	13.32
	2 Wire Unbundled Copper Loop - Non-Designed - Zone 2		2	UEQ	UEQ2X	17.59	31.99	20.02	10.65	1.41			20.35	10.54	13.32	13.32
	2 Wire Unbundled Copper Loop - Non-Designed - Zone 3		3	UEQ	UEQ2X	29.37	31.99	20.02	10.65	1.41			20.35	10.54	13.32	13.32
	Tag Loop at End User Premise			UEQ	URETL		8.95	0.88								
	Loop Testing - Basic 1st Half Hour			UEQ	URET1		57.67	0.00								
	Loop Testing - Basic Additional Half Hour			UEQ	URETA		37.44	37.44								
	Manual Order Coordination 2 Wire Unbundled Copper Loop - Non-Designed (per loop)			UEQ	USBMC		36.52	36.52								
	Unbundled Copper Loop - Non-Design, billing for BST providing make-up (Engineering Information - E.I.)			UEQ	UEQMU		25.33	25.33					20.35	10.54	13.32	13.32
	CLEC to CLEC Conversion Charge Without Outside Dispatch (UCL-ND)			UEQ	UREWO		14.29	7.44					20.35	10.54	13.32	13.32
LOOP MODIFICATION																

UNBUNDLED NETWORK ELEMENTS - Tennessee														Attachment 2 Exh A:			
CATEGORY		RATE ELEMENTS	Interim	Zone	BCS	USOC	RATES($)					Svc Order Submitted Elec per LSR	Svc Order Submitted Manually per LSR	Incremental Charge - Manual Svc Order vs. Electronic-1st	Incremental Charge - Manual Svc Order vs. Electronic-Add'l	Incremental Charge - Manual Svc Order vs. Electronic-Disc 1st	Incremental Charge - Manual Svc Order vs. Electronic-Disc Add'l
								Nonrecurring		Nonrecurring Disconnect		OSS Rates($)					
							Rec	First	Add'l	First	Add'l	SOMEC	SOMAN	SOMAN	SOMAN	SOMAN	SOMAN
	Service Order charges will only apply once per Loop																
		Unbundled Loop Modification, Removal of Load Coils - 2 Wire pair less than or equal to 18k ft, per Unbundled Loop			UAL, UHL, UCL, UEQ, ULS, UEA, UEANL, UEPSR, UEPSB	ULM2L		65.40	65.40								
		Unbundled Loop Modification Removal of Load Coils - 4 Wire less than or equal to 18K ft, per Unbundled Loop			UHL, UCL, UEA	ULM4L		65.40	65.40								
		Unbundled Loop Modification Removal of Bridged Tap Removal, per unbundled loop			UAL, UHL, UCL, UEQ, ULS, UEA, UEANL, UEPSR, UEPSB	ULMBT		65.44	65.44								
SUB-LOOPS																	
	Sub-Loop Distribution																
		Sub-Loop - Per Cross Box Location - CLEC Feeder Facility Set-Up			UEANL, UEF	USBSA		517.25	517.25					20.35	10.54	13.32	13.32
		Sub-Loop - Per Cross Box Location - Per 25 Pair Panel Set-Up			UEANL, UEF	USBSB		42.68	42.68					20.35	10.54	13.32	13.32
		Sub-Loop - Per Building Equipment Room - CLEC Feeder Facility Set-Up			UEANL	USBSC		313.01	313.01					20.35	10.54	13.32	13.32
		Sub-Loop - Per Building Equipment Room - Per 25 Pair Panel Set-Up			UEANL	USBSD		108.06	108.06					20.35	10.54	13.32	13.32
		Sub-Loop Distribution Per 2-Wire Analog Voice Grade Loop - Statewide			UEANL	USBN2	10.02	148.84	112.34	73.14	36.65			20.35	10.54	13.32	13.32
		Order Coordination for Unbundled Sub-Loops, per sub-loop pair			UEANL	USBMC		34.29	34.29								
		Sub-Loop Distribution Per 4-Wire Analog Voice Grade Loop - Zone 1		1	UEANL	USBN4	6.54	106.85	51.20	74.08	11.55			20.35	10.54	13.32	13.32
		Sub-Loop Distribution Per 4-Wire Analog Voice Grade Loop - Zone 2		2	UEANL	USBN4	9.80	106.85	51.20	74.08	11.55			20.35	10.54	13.32	13.32
		Sub-Loop Distribution Per 4-Wire Analog Voice Grade Loop - Zone 3		3	UEANL	USBN4	16.36	106.85	51.20	74.08	11.55			20.35	10.54	13.32	13.32
		Order Coordination for Unbundled Sub-Loops, per sub-loop pair			UEANL	USBMC		34.29	34.29								
		Sub-Loop 2-Wire Intrabuilding Network Cable (INC)			UEANL	USBR2	1.35	94.56	29.35					20.35	10.54	13.32	13.32
		Order Coordination for Unbundled Sub-Loops, per sub-loop pair			UEANL	USBMC		34.29	34.29								
		Sub-Loop 4-Wire Intrabuilding Network Cable (INC)			UEANL	USBR4	2.26	116.14	37.10					20.35	10.54	13.32	13.32
		Order Coordination for Unbundled Sub-Loops, per sub-loop pair			UEANL	USBMC		34.29	34.29								
		Loop Testing - Basic 1st Half Hour			UEANL	URET1		57.67	0.00								
		Loop Testing - Basic Additional Half Hour			UEANL	URETA		37.44	37.44								
		2 Wire Copper Unbundled Sub-Loop Distribution - Zone 1		1	UEF	UCS2X	4.67	81.40	25.75	70.82	9.55			20.35	10.54	13.32	13.32
		2 Wire Copper Unbundled Sub-Loop Distribution - Zone 2		2	UEF	UCS2X	6.99	81.40	25.75	70.82	9.55			20.35	10.54	13.32	13.32
		2 Wire Copper Unbundled Sub-Loop Distribution - Zone 3		3	UEF	UCS2X	11.67	81.40	25.75	70.82	9.55			20.35	10.54	13.32	13.32
		Order Coordination for Unbundled Sub-Loops, per sub-loop pair			UEF	USBMC		34.29	34.29								
		4 Wire Copper Unbundled Sub-Loop Distribution - Zone 1		1	UEF	UCS4X	5.85	81.74	26.08	74.08	11.55			20.35	10.54	13.32	13.32
		4 Wire Copper Unbundled Sub-Loop Distribution - Zone 2		2	UEF	UCS4X	8.76	81.74	26.08	74.08	11.55			20.35	10.54	13.32	13.32
		4 Wire Copper Unbundled Sub-Loop Distribution - Zone 3		3	UEF	UCS4X	14.63	81.74	26.08	74.08	11.55			20.35	10.54	13.32	13.32
		Order Coordination for Unbundled Sub-Loops, per sub-loop pair			UEF	USBMC		34.29	34.29								
		Loop Tagging Service Level 1, Unbundled Copper Loop, Non-Designed and Distribution Subloops			UEF, UEANL	URETL		8.95	0.88								
		Loop Testing - Basic 1st Half Hour			UEF	URET1		57.67	0.00								
		Loop Testing - Basic Additional Half Hour			UEF	URETA		37.44	37.44								
	Unbundled Sub-Loop Modification																
		Unbundled Sub-Loop Modification - 2-W Copper Dist Load Coil/Equip Removal per 2-W PR			UEF	ULM2X		335.36	7.82								

UNBUNDLED NETWORK ELEMENTS - Tennessee														Attachment 2 Exh A:			
CATEGORY	RATE ELEMENTS	Interim	Zone	BCS	USOC	RATES($)					Svc Order Submitted Elec per LSR	Svc Order Submitted Manually per LSR	Incremental Charge - Manual Svc Order vs. Electronic-1st	Incremental Charge - Manual Svc Order vs. Electronic-Add'l	Incremental Charge - Manual Svc Order vs. Electronic-Disc 1st	Incremental Charge - Manual Svc Order vs. Electronic-Disc Add'l
							Nonrecurring		Nonrecurring Disconnect		OSS Rates($)					
						Rec	First	Add'l	First	Add'l	SOMEC	SOMAN	SOMAN	SOMAN	SOMAN	SOMAN
	Unbundled Sub-loop Modification - 4-W Copper Dist Load Coil/Equip Removal per 4-W PR			UEF	ULM4X		335.36	7.82								
	Unbundled Loop Modification, Removal of Bridge Tap, per unbundled loop			UEF	ULMBT		528.48	9.74								
Unbundled Network Terminating Wire (UNTW)																
	Unbundled Network Terminating Wire (UNTW) per Pair			UENTW	UENPP	0.4555	2.48	2.48	0.5814	0.5814			20.35	10.54	13.32	13.32
Network Interface Device (NID)																
	Network Interface Device (NID) - 1-2 lines			UENTW	UND12		63.46	31.06	0.6391	0.6391			20.35	10.54	13.32	13.32
	Network Interface Device (NID) - 1-6 lines			UENTW	UND16		63.46	31.06	0.6522	0.6522			20.35	10.54	13.32	13.32
	Network Interface Device Cross Connect - 2 W			UENTW	UNDC2		8.75	8.75					20.35	10.54	13.32	13.32
	Network Interface Device Cross Connect - 4W			UENTW	UNDC4		8.75	8.75					20.35	10.54	13.32	13.32
UNE OTHER, PROVISIONING ONLY - NO RATE																
	Unbundled Contact Name, Provisioning Only - no rate			UAL, UCL, UDC, UDL, UDN, UEA, UHL, UEANL, UEF, UEQ, UENTW, NTCVG, NTCUD, NTCD1, USL	UNECN	0.00	0.00									
	Unbundled DS1 Loop - Superframe Format Option - no rate			USL, NTCD1	CCOSF	0.00	0.00									
	Unbundled DS1 Loop - Expanded Superframe Format option - no rate			USL, NTCD1	CCOEF	0.00	0.00									
	NID - Dispatch and Service Order for NID installation			UENTW	UNDBX	0.00	0.00									
	UNTW Circuit Establishment, Provisioning Only - No Rate			UENTW	UENCE	0.00	0.00									
LOOP MAKE-UP																
	Loop Makeup - Preordering Without Reservation, per working or spare facility queried (Manual).			UMK	UMKLW		0.76	0.76					20.35	10.54	13.32	13.32
	Loop Makeup - Preordering With Reservation, per spare facility queried (Manual).			UMK	UMKLP		0.76	0.76					20.35	10.54	13.32	13.32
	Loop Makeup--With or Without Reservation, per working or spare facility queried (Mechanized)			UMK	UMKMQ		0.76	0.76					20.35	10.54	13.32	13.32
LINE SPLITTING																
END USER ORDERING-CENTRAL OFFICE BASED																
	Line Splitting - per line activation DLEC owned splitter			UEPSR UEPSB	UREOS	0.61										
	Line Splitting - per line activation BST owned - physical			UEPSR UEPSB	UREBP	0.61	48.96	21.39	35.06	10.79			20.35	10.54	13.32	13.32
	Line Splitting - per line activation BST owned - virtual			UEPSR UEPSB	UREBV	0.61	48.96	21.39	35.06	10.79			20.35	10.54	13.32	13.32
UNBUNDLED EXCHANGE ACCESS LOOP																
2-WIRE ANALOG VOICE GRADE LOOP																
	2 Wire Analog Voice Grade Loop-Service Level 1-Line Splitting-Zone 1		1	UEPSR UEPSB	UEALS	11.74	31.99	20.02	10.65	1.41			20.35	10.54	13.32	13.32
	2 Wire Analog Voice Grade Loop-Service Level 1-Line Splitting-Zone 1		1	UEPSR UEPSB	UEABS	11.74	31.99	20.02	10.65	1.41			20.35	10.54	13.32	13.32
	2 Wire Analog Voice Grade Loop- Service Level 1-Line Splitting-Zone 2		2	UEPSR UEPSB	UEALS	17.59	31.99	20.02	10.65	1.41			20.35	10.54	13.32	13.32
	2 Wire Analog Voice Grade Loop- Service Level 1-Line Splitting-Zone 2		2	UEPSR UEPSB	UEABS	17.59	31.99	20.02	10.65	1.41			20.35	10.54	13.32	13.32
	2 Wire Analog Voice Grade Loop-Service Level 1-Line Splitting-Zone 3		3	UEPSR UEPSB	UEALS	29.37	31.99	20.02	10.65	1.41			20.35	10.54	13.32	13.32
	2 Wire Analog Voice Grade Loop-Service Level 1-Line Splitting-Zone 3		3	UEPSR UEPSB	UEABS	29.37	31.99	20.02	10.65	1.41			20.35	10.54	13.32	13.32
PHYSICAL COLLOCATION																
	Physical Collocation-2 Wire Cross Connects (Loop) for Line Splitting			UEPSR UEPSB	PE1LS	0.0475	11.62	9.90	10.38	8.66			0.00	0.00	0.00	0.00
VIRTUAL COLLOCATION																
	Virtual Collocation-2 Wire Cross Connects (Loop) for Line Splitting			UEPSR UEPSB	VE1LS	0.57	11.62	9.90	10.38	8.66			2.07	2.81	0.67	1.41
MAINTENANCE OF SERVICE																
NOTE: The Expedite charge will be maintained commensurate with BellSouth's FCC No.1 Tariff, Section 13.3.1 as applicable.																
	No Trouble Found - per 1/2 hour increments - Basic						80.00	55.00								
	No Trouble Found - per 1/2 hour increments - Overtime						90.00	65.00								

UNBUNDLED NETWORK ELEMENTS - Tennessee														Attachment 2 Exh A:			
CATEGORY	RATE ELEMENTS	Interim	Zone	BCS	USOC	RATES($)					Svc Order Submitted Elec per LSR	Svc Order Submitted Manually per LSR	Incremental Charge - Manual Svc Order vs. Electronic-1st	Incremental Charge - Manual Svc Order vs. Electronic-Add'l	Incremental Charge - Manual Svc Order vs. Electronic-Disc 1st	Incremental Charge - Manual Svc Order vs. Electronic-Disc Add'l
							Nonrecurring		Nonrecurring Disconnect		OSS Rates($)					
						Rec	First	Add'l	First	Add'l	SOMEC	SOMAN	SOMAN	SOMAN	SOMAN	SOMAN
	No Trouble Found - per 1/2 hour increments - Premium						100.00	75.00								
UNBUNDLED DEDICATED TRANSPORT																
INTEROFFICE CHANNEL - DEDICATED TRANSPORT - Stand Alone																
	Interoffice Channel - 2-Wire Voice Grade - per mile			U1TVX	1L5XX	0.0054										
	Interoffice Channel - 2-Wire Voice Grade - Facility Termination			U1TVX	U1TV2	18.58	55.39	17.37	27.96	3.51			20.35	21.09	9.80	10.54
	Interoffice Channel - 2-Wire Voice Grade Rev Bat. - per mile			U1TVX	1L5XX	0.0054										
	Interoffice Channel - 2-Wire VG Rev Bat. - Facility Termination			U1TVX	U1TR2	18.58	55.39	17.37	27.96	3.51			20.35	21.09	9.80	10.54
	Interoffice Channel - 4-Wire Voice Grade - per mile			U1TVX	1L5XX	0.0054										
	Interoffice Channel - 4- Wire Voice Grade - Facility Termination			U1TVX	U1TV4	24.09	37.87	26.02	30.78	13.07			15.08	15.08	9.80	10.54
	Interoffice Channel - 56 kbps - per mile			U1TDX	1L5XX	0.0174										
	Interoffice Channel - 56 kbps - Facility Termination			U1TDX	U1TD5	17.98	55.39	17.37	27.96	3.51			20.35	21.09	9.80	10.54
	Interoffice Channel - 64 kbps - per mile			U1TDX	1L5XX	0.0174										
	Interoffice Channel - 64 kbps - Facility Termination			U1TDX	U1TD6	17.98	55.39	17.37	27.96	3.51			20.35	21.09	9.80	10.54
	Interoffice Channel - DS1 - per mile			U1TD1	1L5XX	0.3562										
	Interoffice Channel - DS1 - Facility Termination			U1TD1	U1TF1	77.86	112.40	76.27	19.55	14.99			20.35	21.09	9.80	10.54
	Interoffice Channel - DS3 - per mile			U1TD3	1L5XX	2.34										
	Interoffice Channel - DS3 - Facility Termination			U1TD3	U1TF3	848.99	395.29	176.56	109.04	105.91			36.84	36.84	19.01	19.01
	Interoffice Channel - STS-1 - per mile			U1TS1	1L5XX	2.34										
	Interoffice Channel - STS-1 - Facility Termination			U1TS1	U1TFS	849.30	395.29	176.56	109.04	105.91			36.84	36.84	19.01	19.01
UNBUNDLED DARK FIBER - Stand Alone or in Combination																
	Dark Fiber - Interoffice Transport, Per Four Fiber Strands, Per Route Mile Or Fraction Thereof			UDF, UDFCX	1L5DF	28.74										
	Dark Fiber - Interoffice Transport, Per Four Fiber Strands, Per Route Mile Or Fraction Thereof			UDF, UDFCX	UDF14		1,121.00	153.19								
HIGH CAPACITY UNBUNDLED LOCAL LOOP																
DS-3/STS-1 UNBUNDLED LOCAL LOOP - Stand Alone																
	DS3 Unbundled Local Loop - per mile			UE3	1L5ND	9.19										
	DS3 Unbundled Local Loop - Facility Termination			UE3	UE3PX	374.24	595.37	304.50	234.83	170.16			36.84	36.84	19.01	19.01
	STS-1Unbundled Local Loop - per mile			UDLSX	1L5ND	9.19										
	STS-1 Unbundled Local Loop - Facility Termination			UDLSX	UDLS1	389.35	595.37	304.50	234.83	170.16			36.84	36.84	19.01	19.01
ENHANCED EXTENDED LINK (EELs)																
Network Elements Used in Combinations																
	2-Wire VG Loop (SL2) in Combination - Zone 1		1	UNCVX	UEAL2	14.74	108.76	35.47	72.94	10.86			31.26	10.42		
	2-Wire VG Loop (SL2) in Combination - Zone 2		2	UNCVX	UEAL2	22.08	108.76	35.47	72.94	10.86			31.26	10.42		
	2-Wire VG Loop (SL2) in Combination - Zone 3		3	UNCVX	UEAL2	36.87	108.76	35.47	72.94	10.86			31.26	10.42		
	4-Wire Analog Voice Grade Loop in Combination - Zone 1		1	UNCVX	UEAL4	21.98	108.76	35.47	72.94	10.86			31.26	10.42		
	4-Wire Analog Voice Grade Loop in Combination - Zone 2		2	UNCVX	UEAL4	32.93	108.76	35.47	72.94	10.86			31.26	10.42		
	4-Wire Analog Voice Grade Loop in Combination - Zone 3		3	UNCVX	UEAL4	54.99	108.76	35.47	72.94	10.86			31.26	10.42		
	2-Wire ISDN Loop in Combination - Zone 1		1	UNCNX	U1L2X	19.77	108.76	35.47	72.94	10.86			31.26	10.42		
	2-Wire ISDN Loop in Combination - Zone 2		2	UNCNX	U1L2X	29.63	108.76	35.47	72.94	10.86			31.26	10.42		
	2-Wire ISDN Loop in Combination - Zone 3		3	UNCNX	U1L2X	49.47	108.76	35.47	72.94	10.86			31.26	10.42		
	4-Wire 56Kbps Digital Grade Loop in Combination - Zone 1		1	UNCDX	UDL56	27.66	108.76	35.47	72.94	10.86			20.35	10.54	13.32	
	4-Wire 56Kbps Digital Grade Loop in Combination - Zone 2		2	UNCDX	UDL56	41.47	108.76	35.47	72.94	10.86			20.35	10.54	13.32	
	4-Wire 56Kbps Digital Grade Loop in Combination - Zone 3		3	UNCDX	UDL56	69.24	108.76	35.47	72.94	10.86			20.35	10.54	13.32	
	4-Wire 64Kbps Digital Grade Loop in Combination - Zone 1		1	UNCDX	UDL64	27.66	108.76	35.47	72.94	10.86			20.35	10.54	13.32	
	4-Wire 64Kbps Digital Grade Loop in Combination - Zone 2		2	UNCDX	UDL64	41.47	108.76	35.47	72.94	10.86			20.35	10.54	13.32	
	4-Wire 64Kbps Digital Grade Loop in Combination - Zone 3		3	UNCDX	UDL64	69.24	108.76	35.47	72.94	10.86			20.35	10.54	13.32	
	4-Wire DS1 Digital Loop in Combination - Zone 1		1	UNC1X	USLXX	51.38	228.40	161.74	79.87	24.88			18.98	8.43	11.95	
	4-Wire DS1 Digital Loop in Combination - Zone 2		2	UNC1X	USLXX	76.98	228.40	161.74	79.87	24.88			18.98	8.43	11.95	
	4-Wire DS1 Digital Loop in Combination - Zone 3		3	UNC1X	USLXX	128.54	228.40	161.74	79.87	24.88			18.98	8.43	11.95	
	DS3 Local Loop in combination - per mile			UNC3X	1L5ND	9.19										
	DS3 Local Loop in combination - Facility Termination			UNC3X	UE3PX	374.24	1,260.47	628.84	106.78	45.24			36.84	36.84	19.01	19.01
	STS-1 Local Loop in combination - per mile			UNCSX	1L5ND	9.19										
	STS-1 Local Loop in combination - Facility Termination			UNCSX	UDLS1	389.35	1,260.47	628.84	79.87	24.88			36.84	36.84	19.01	19.01
	Interoffice Channel in combination - 2-wire VG - per mile			UNCVX	1L5XX	0.0174										
	Interoffice Channel in combination - 2-wire VG - Facility Termination			UNCVX	U1TV2	18.58	79.83	44.08	69.32	31.00			20.35	21.09	9.80	10.54

UNBUNDLED NETWORK ELEMENTS - Tennessee														Attachment 2 Exh A:			
CATEGORY		RATE ELEMENTS	Interim	Zone	BCS	USOC	RATES($)					Svc Order Submitted Elec per LSR	Svc Order Submitted Manually per LSR	Incremental Charge - Manual Svc Order vs. Electronic-1st	Incremental Charge - Manual Svc Order vs. Electronic-Add'l	Incremental Charge - Manual Svc Order vs. Electronic-Disc 1st	Incremental Charge - Manual Svc Order vs. Electronic-Disc Add'l
								Nonrecurring		Nonrecurring Disconnect		OSS Rates($)					
							Rec	First	Add'l	First	Add'l	SOMEC	SOMAN	SOMAN	SOMAN	SOMAN	SOMAN
		Interoffice Channel in combination - 4-wire VG - per mile			UNCVX	1L5XX	0.0174										
		Interoffice Channel in combination - 4-wire VG - Facility Termination			UNCVX	U1TV4	24.09	79.83	44.08	69.32	31.00			15.08	15.08	8.66	8.66
		Interoffice Channel in combination - 4-wire 56 kbps - per mile			UNCDX	1L5XX	0.0174										
		Interoffice Channel in combination - 4-wire 56 kbps - Facility Termination			UNCDX	U1TD5	17.98	79.83	44.08	69.32	31.00			20.35	21.09	9.80	10.54
		Interoffice Channel in combination - 4-wire 64 kbps - per mile			UNCDX	1L5XX	0.0174										
		Interoffice Channel in combination - 4-wire 64 kbps - Facility Termination			UNCDX	U1TD6	17.98	79.83	44.08	69.32	31.00			20.35	21.09	9.80	10.54
		Interoffice Channel in combination - DS1 - per mile			UNC1X	1L5XX	0.3562										
		Interoffice Channel in combination - DS1 Facility Termination			UNC1X	U1TF1	77.86	171.24	113.12	70.07	30.90			20.35	21.09	9.80	10.54
		Interoffice Channel in combination - DS3 - per mile			UNC3X	1L5XX	2.34										
		Interoffice Channel in combination - DS3 - Facility Termination			UNC3X	U1TF3	848.99	482.01	153.81	64.43	35.43			36.84	36.84	19.01	19.01
		Interoffice Channel in combination - STS-1 - per mile			UNCSX	1L5XX	2.34										
		Interoffice Channel in combination - STS-1 Facility Termination			UNCSX	U1TFS	849.30	482.01	153.81	64.43	35.43			36.84	36.84	19.01	19.01
ADDITIONAL NETWORK ELEMENTS																	
	Optional Features & Functions:																
		Clear Channel Capability Extended Frame Option - per DS1	I		U1TD1, ULDD1,UNC1X	CCOEF		0.00	0.00	0.00	0.00						
		Clear Channel Capability Super FrameOption - per DS1	i		U1TD1, ULDD1,UNC1X	CCOSF		0.00	0.00	0.00	0.00						
		Clear Channel Capability (SF/ESF) Option - Subsequent Activity - per DS1	I		ULDD1, U1TD1, UNC1X, USL	NRCCC		185.16	23.86	2.03	0.79						
		C-bit Parity Option - Subsequent Activity - per DS3	i		U1TD3, ULDD3, UE3, UNC3X	NRCC3		219.46	7.68	0.7637							
		DS1/DS0 Channel System			UNC1X	MQ1	80.77	105.76	14.48	3.04	2.74						
		DS3/DS1Channel System			UNC3X, UNCSX	MQ3	222.98	156.02	49.41	17.12	6.77			20.35	9.80	11.49	1.18
		Voice Grade COCI in combination			UNCVX	1D1VG	0.91	5.70	4.42								
		Voice Grade COCI - for Stand Alone Local Loop			UEA	1D1VG	0.91	5.70	4.42								
		Voice Grade COCI - for connection to a channelized DS1 Local Channel in the same SWC as collocation			U1TUC	1D1VG	0.91	5.70	4.42								
		OCU-DP COCI (2.4-64kbs) in combination			UNCDX	1D1DD	1.82	5.70	4.42					20.35	9.80	11.49	1.18
		OCU-DP COCI (2.4-64kbs) - for Stand Alone Local Loop			UDL	1D1DD	1.82	5.70	4.42								
		OCU-DP COCI (2.4-64kbs) - for connection to a channelized DS1 Local Channel in the same SWC as collocation			U1TUD	1D1DD	1.82	5.70	4.42								
		2-wire ISDN COCI (BRITE) in combination			UNCNX	UC1CA	17.58	5.70	4.42					20.35	9.80	11.49	1.18
		2-wire ISDN COCI (BRITE) - for a Local Loop			UDN	UC1CA	17.58	5.70	4.42								
		2-wire ISDN COCI (BRITE) - for connection to a channelized DS1 Local Channel in the same SWC as collocation			U1TUB	UC1CA	17.58	5.70	4.42								
		DS1 COCI in combination			UNC1X	UC1D1	17.58	5.70	4.42					20.35	9.80	11.49	1.18
		DS1 COCI - for Stand Alone Local Channel			ULDD1	UC1D1	17.58	5.70	4.42								
		DS1 COCI - for Stand Alone Interoffice Channel			U1TD1	UC1D1	17.58	5.70	4.42								
		DS1 COCI - for Stand Alone Local Loop			USL	UC1D1	17.58	5.70	4.42								
		DS1 COCI - for connection to a channelized DS1 Local Channel in the same SWC as collocation			U1TUA	UC1D1	17.58	5.70	4.42								
		Wholesale to UNE, Switch-As-Is Conversion Charge			UNCVX, U1TVX, UNCDX, U1TDX, UNC1X, U1TD1,UNC3X, U1TD3, UNCSX, U1TS1, UDF,UDFCX	UNCCC		52.73	24.62								
		Unbundled Misc Rate Element, SNE SAI, Single Network Element - Switch As Is Non-recurring Charge, per circuit (LSR)	I		U1TVX, U1TDX, U1TD1, U1TD3, U1TS1, UDF, UE3	URESL		34.53	15.11								
		Unbundled Misc Rate Element, SNE SAI, Single Network Element - Switch As Is Non-recurring Charge, incremental charge per circuit on a spreadsheet	i		U1TVX, U1TDX, U1TD1, U1TD3, U1TS1, UDF, UE3	URESP		1.40	1.40								
		UNE Reconfiguration Change Charge per Circuit	I		UNC1X	URERC		35.00	35.00								

UNBUNDLED NETWORK ELEMENTS - Tennessee														Attachment 2 Exh A:			
CATEGORY		RATE ELEMENTS	Interim	Zone	BCS	USOC	RATES($)					Svc Order Submitted Elec per LSR	Svc Order Submitted Manually per LSR	Incremental Charge - Manual Svc Order vs. Electronic-1st	Incremental Charge - Manual Svc Order vs. Electronic-Add'l	Incremental Charge - Manual Svc Order vs. Electronic-Disc 1st	Incremental Charge - Manual Svc Order vs. Electronic-Disc Add'l
								Nonrecurring		Nonrecurring Disconnect		OSS Rates($)					
							Rec	First	Add'l	First	Add'l	SOMEC	SOMAN	SOMAN	SOMAN	SOMAN	SOMAN
		UNE Reconfiguration Change Charge per Circuit Project Managed	I		UNC1X	URERP		1.40	1.40								
		UNE Reconfiguration Change Charge per Circuit	I		UNC1X	URERC		35.00	35.00								
		UNE Reconfiguration Change Charge per Circuit Project Managed	I		UNC1X	URERP		1.40	1.40								
	Access to DCS - Customer Reconfiguration (FlexServ)																
		Customer Reconfiguration Establishment						2.78		3.32							
		DS1 DCS Termination with DS0 Switching					23.35	41.14	34.25	29.94	24.08						
		DS1 DCS Termination with DS1 Switching					13.45	27.79	20.90	21.99	16.12						
		DS3 DCS Termination with DS1 Switching					150.88	41.14	34.25	29.94	24.08						
	Node (SynchroNet)																
		Node per month			UNCDX	UNCNT	17.11										
	Service Rearrangements																
		NRC - Change in Facility Assignment per circuit Service Rearrangement	I		U1TVX, U1TDX, UEA, UDL, U1TUC, U1TUD, U1TUB, ULDVX, ULDDX, UNCVX, UNCDX, UNC1X	URETD		130.47	40.11								
		NRC - Change in Facility Assignment per circuit Project Management (added to CFA per circuit if project managed)	I		U1TVX, U1TDX, UEA, UDL, U1TUC, U1TUD, U1TUB, ULDVX, ULDDX, UNCVX, UNCDX, UNC1X	URETB		1.28	1.28								
		NRC - Order Coordination Specific Time - Dedicated Transport	I		UNC1X	OCOSR		18.93	18.93								
COMMINGLING																	
		Commingling Authorization			UNCVX, UNCDX, UNC1X, UNC3X, UNCSX, U1TD1, U1TD3, U1TS1, UE3, UDLSX, U1TVX, U1TDX, U1TUB, ULDVX, ULDD1, ULDD3, ULDS1	CMGAU	0.00	0.00	0.00	0.00	0.00						
	Commingled (UNE part of single bandwidth circuit)																
		Commingled VG COCI			XDV2X, NTCVG	1D1VG	1.82	5.70	4.42								
		Commingled Digital COCI			XDV6X, NTCUD	1D1DD	0.91	5.70	4.42								
		Commingled ISDN COCI			XDD4X	UC1CA	17.58	5.70	4.42								
		Commingled 2-wire VG Interoffice Channel Facility Termination			XDV2X	U1TV2	18.58	79.83	44.08	69.32	31.00						
		Commingled 4-wire VG Interoffice Channel Facility Termination			XDV6X	U1TV4	24.09	79.83	44.08	69.32	31.00						
		Commingled 56kbps Interoffice Channel Facility Termination			XDD4X	U1TD5	17.98	79.83	44.08	69.32	31.00						
		Commingled 64kbps Interoffice Channel Facility Termination			XDD4X	U1TD6	17.98	79.83	44.08	69.32	31.00						
		Commingled VG/DS0 Interoffice Channel per mile			XDV2X, XDV6X, XDD4X	1L5XX	0.0174										
		Commingled 2-wire Local Loop Zone 1		1	XDV2X	UEAL2	14.74	108.76	35.47	72.94	10.86						
		Commingled 2-wire Local Loop Zone 2		2	XDV2X	UEAL2	22.08	108.76	35.47	72.94	10.86						
		Commingled 2-wire Local Loop Zone 3		3	XDV2X	UEAL2	36.87	108.76	35.47	72.94	10.86						
		Commingled 4-wire Local Loop Zone 1		1	XDV6X	UEAL4	21.98	108.76	35.47	72.94	10.86						
		Commingled 4-wire Local Loop Zone 2		2	XDV6X	UEAL4	32.93	108.76	35.47	72.94	10.86						
		Commingled 4-wire Local Loop Zone 3		3	XDV6X	UEAL4	54.99	108.76	35.47	72.94	10.86						
		Commingled 56kbps Local Loop Zone 1		1	XDD4X	UDL56	27.68	108.76	35.47	72.94	10.86						
		Commingled 56kbps Local Loop Zone 2		2	XDD4X	UDL56	41.47	108.76	35.47	72.94	10.86						
		Commingled 56kbps Local Loop Zone 3		3	XDD4X	UDL56	69.24	108.76	35.47	72.94	10.86						
		Commingled 64kbps Local Loop Zone 1		1	XDD4X	UDL64	27.68	108.76	35.47	72.94	10.86						
		Commingled 64kbps Local Loop Zone 2		2	XDD4X	UDL64	41.47	108.76	35.47	72.94	10.86						
		Commingled 64kbps Local Loop Zone 3		3	XDD4X	UDL64	69.24	108.76	35.47	72.94	10.86						
		Commingled ISDN Local Loop Zone 1		1	XDD4X	U1L2X	19.77	108.76	35.47	72.94	10.86						

UNBUNDLED NETWORK ELEMENTS - Tennessee														Attachment 2 Exh A:			
CATEGORY	RATE ELEMENTS	Interim	Zone	BCS	USOC	RATES($)					Svc Order Submitted Elec per LSR	Svc Order Submitted Manually per LSR	Incremental Charge - Manual Svc Order vs. Electronic-1st	Incremental Charge - Manual Svc Order vs. Electronic-Add'l	Incremental Charge - Manual Svc Order vs. Electronic-Disc 1st	Incremental Charge - Manual Svc Order vs. Electronic-Disc Add'l
							Nonrecurring		Nonrecurring Disconnect		OSS Rates($)					
						Rec	First	Add'l	First	Add'l	SOMEC	SOMAN	SOMAN	SOMAN	SOMAN	SOMAN
	Commingled ISDN Local Loop Zone 2		2	XDD4X	U1L2X	29.63	108.76	35.47	72.94	10.86						
	Commingled ISDN Local Loop Zone 3		3	XDD4X	U1L2X	49.47	108.76	35.47	72.94	10.86						
	Commingled DS1 COCI			XDH1X, NTCD1	UC1D1	17.58	5.70	4.42								
	Commingled DS1 Interoffice Channel Facility Termination			XDH1X	U1TF1	77.86	171.24	113.12	70.07	30.90						
	Commingled DS1 Interoffice Channel per mile			XDH1X	1L5XX	0.3562										
	Commingled DS1/DS0 channelSystem			XDH1X	MQ1	80.77	105.76	14.48	3.04	2.74						
	Commingled DS1 Local Loop Zone 1		1	XDH1X	USLXX	51.38	228.40	161.74	79.87	24.88						
	Commingled DS1 Local Loop Zone 2		2	XDH1X	USLXX	76.98	228.40	161.74	79.87	24.88						
	Commingled DS1 Local Loop Zone 3		3	XDH1X	USLXX	128.54	228.40	161.74	79.87	24.88						
	Commingled DS3 Local Loop Facility Termination			HFQC6	UE3PX	374.24	1,260.47	628.84	106.78	45.24						
	Commingled DS3/STS-1 Local Loop per mile			HFQC6, HFRST	1L5ND	9.19										
	Commingled STS-1 Local Loop Facility Termination			HFRST	UDLS1	389.35	1,260.47	628.84	79.87	24.88						
	Commingled DS3/DS1 channelSystem			HFQC6	MQ3	222.98	156.02	49.41	17.12	6.77						
	Commingled DS3 Interoffice Channel Facility Termination			HFQC6	U1TF3	848.99	482.01	153.81	64.43	35.43						
	Commingled DS3 Interoffice Channel per mile			HFQC6	1L5XX	2.34										
	Commingled STS-1Interoffice Channel Facility Termination			HFRST	U1TFS	849.30	482.01	153.81	64.43	35.43						
	Commingled STS-1Interoffice Channel per mile			HFRST	1L5XX	2.34										
	Commingled Dark Fiber - Interoffice Transport, Per Four Fiber Strands, Per Route Mile Or Fraction Thereof			HEQDL	1L5DF	28.74										
	Commingled Dark Fiber - Interoffice Transport, Per Four Fiber Strands, Per Route Mile Or Fraction Thereof			HEQDL	UDF14		1,121.00	153.19	0.00	0.00						
SIGNALING (CCS7)																
	NOTE:"bk" beside a rate indicates that the parties have agreed to bill and keep for that element pursuant to the terms and conditions in Attachment 3.															
	CCS7 Signaling Usage, Per TCAP Message					0.0000916bk										
	CCS7 Signaling Usage, Per ISUP Message					0.0000373bk										
LNP Query Service																
	LNP Charge Per query					0.0009277										
	LNP Service Establishment Manual						23.60	13.83	23.60	12.71						
	LNP Service Provisioning with Point Code Establishment						1,119.00	571.71	1,119.00	571.71						
911 PBX LOCATE																
	911 PBX LOCATE DATABASE CAPABILITY															
	Service Establishment per CLEC per End User Account			9PBDC	9PBEU		1,706.00									
	Changes to TN Range or Customer Profile			9PBDC	9PBTN		170.69									
	Per Telephone Number (Monthly)			9PBDC	9PBMM	0.07										
	Change Company (Service Provider) ID			9PBDC	9PBPC		501.06									
	PBX Locate Service Support per CLEC (Monthlt)			9PBDC	9PBMR	191.92										
	Service Order Charge			9PBDC	9PBSC		23.20									
	911 PBX LOCATE TRANSPORT COMPONENT															
	See Att 3															
	Note: Rates displaying an "I" in Interim column are interim as a result of a Commission order.															

UNBUNDLED NETWORK ELEMENTS - Alabama														Attachment: 2 Exh. B			
CATEGORY	RATE ELEMENTS	Interim	Zone	BCS	USOC	RATES ($)					Svc Order Submitted Elec per LSR	Svc Order Submitted Manually per LSR	Incremental Charge - Manual Svc Order vs. Electronic-1st	Incremental Charge - Manual Svc Order vs. Electronic-Add'l	Incremental Charge - Manual Svc Order vs. Electronic-Disc 1st	Incremental Charge - Manual Svc Order vs. Electronic-Disc Add'l
						Rec	Nonrecurring		Nonrecurring Disconnect		OSS Rates ($)					
							First	Add'l	First	Add'l	SOMEC	SOMAN	SOMAN	SOMAN	SOMAN	SOMAN
UNBUNDLED EXCHANGE ACCESS LOOP																
2-WIRE HIGH BIT RATE DIGITAL SUBSCRIBER LINE (HDSL) COMPATIBLE LOOP																
	2 Wire Unbundled HDSL Loop including manual service inquiry & facility reservation - Zone 1		1	UHL	UHL2X	10.05										
	2 Wire Unbundled HDSL Loop including manual service inquiry & facility reservation - Zone 2		2	UHL	UHL2X	11.70										
	2 Wire Unbundled HDSL Loop including manual service inquiry & facility reservation - Zone 3		3	UHL	UHL2X	13.16										
	2 Wire Unbundled HDSL Loop without manual service inquiry and facility reservation - Zone 1		1	UHL	UHL2W	10.05										
	2 Wire Unbundled HDSL Loop without manual service inquiry and facility reservation - Zone 2		2	UHL	UHL2W	11.70										
	2 Wire Unbundled HDSL Loop without manual service inquiry and facility reservation - Zone 3		3	UHL	UHL2W	13.16										
4-WIRE HIGH BIT RATE DIGITAL SUBSCRIBER LINE (HDSL) COMPATIBLE LOOP																
	4 Wire Unbundled HDSL Loop including manual service inquiry and facility reservation - Zone 1		1	UHL	UHL4X	16.04										
	4-Wire Unbundled HDSL Loop including manual service inquiry and facility reservation - Zone 2		2	UHL	UHL4X	17.89										
	4-Wire Unbundled HDSL Loop including manual service inquiry and facility reservation - Zone 3		3	UHL	UHL4X	17.54										
	4-Wire Unbundled HDSL Loop without manual service inquiry and facility reservation - Zone 1		1	UHL	UHL4W	16.04										
	4-Wire Unbundled HDSL Loop without manual service inquiry and facility reservation - Zone 2		2	UHL	UHL4W	17.89										
	4-Wire Unbundled HDSL Loop without manual service inquiry and facility reservation - Zone 3		3	UHL	UHL4W	17.54										
4-WIRE DS1 DIGITAL LOOP																
	4-Wire DS1 Digital Loop - Zone 1		1	USL	USLXX	94.93										
	4-Wire DS1 Digital Loop - Zone 2		2	USL	USLXX	177.31										
	4-Wire DS1 Digital Loop - Zone 3		3	USL	USLXX	361.70										
HIGH CAPACITY UNBUNDLED LOCAL LOOP																
	High Capacity Unbundled Local Loop - DS3 - Per Mile per month			UE3	1L5ND	9.64										
	High Capacity Unbundled Local Loop - DS3 - Facility Termination per month			UE3	UE3PX	355.33										
	High Capacity Unbundled Local Loop - STS-1 - Per Mile per month			UDLSX	1L5ND	9.64										
	High Capacity Unbundled Local Loop - STS-1 - Facility Termination per month			UDLSX	UDLS1	367.80										
UNBUNDLED DEDICATED TRANSPORT																
INTEROFFICE CHANNEL - DEDICATED TRANSPORT																
	Interoffice Channel - Dedicated Channel - DS1 - Per Mile per month			U1TD1	1L5XX	0.21										
	Interoffice Channel - Dedicated Tranport - DS1 - Facility Termination			U1TD1	U1TF1	69.18										
	Interoffice Channel - Dedicated Transport - DS3 - Per Mile per month			U1TD3	1L5XX	4.70										
	Interoffice Channel - Dedicated Transport - DS3 - Facility Termination per month			U1TD3	U1TF3	809.05										
	Interoffice Channel - Dedicated Transport - STS-1 - Per Mile per month			U1TS1	1L5XX	4.70										
	Interoffice Channel - Dedicated Transport - STS-1 - Facility Termination			U1TS1	U1TFS	806.58										
ENHANCED EXTENDED LINK (EELs)																
NOTE: The monthly recurring and non-recurring charges below will apply and the Switch-As-Is Charge will not apply for UNE combinations provisioned as ' Ordinarily Combined' Network Elements.																
NOTE: The monthly recurring and the Switch-As-Is Charge and not the non-recurring charges below will apply for UNE combinations provisioned as ' Currently Combined' Network Elements.																
EXTENDED 4-WIRE DS1 DIGITAL EXTENDED LOOP WITH DEDICATED DS1 INTEROFFICE TRANSPORT																

UNBUNDLED NETWORK ELEMENTS - Alabama														Attachment: 2 Exh. B			
CATEGORY		RATE ELEMENTS	Interim	Zone	BCS	USOC	RATES ($)					Svc Order Submitted Elec per LSR	Svc Order Submitted Manually per LSR	Incremental Charge - Manual Svc Order vs. Electronic-1st	Incremental Charge - Manual Svc Order vs. Electronic-Add'l	Incremental Charge - Manual Svc Order vs. Electronic-Disc 1st	Incremental Charge - Manual Svc Order vs. Electronic-Disc Add'l
							Rec	Nonrecurring		Nonrecurring Disconnect		OSS Rates ($)					
								First	Add'l	First	Add'l	SOMEC	SOMAN	SOMAN	SOMAN	SOMAN	SOMAN
		4-Wire DS1 Digital Loop in Combination - Zone 1		1	UNC1X	USLXX	94.93										
		4-Wire DS1 Digital Loop in Combination - Zone 2		2	UNC1X	USLXX	177.31										
		4-Wire DS1 Digital Loop in Combination - Zone 3		3	UNC1X	USLXX	361.70										
		Interoffice Transport - Dedicated - DS1 combination - Per Mile per month			UNC1X	1L5XX	0.21										
		Interoffice Transport - Dedicated - DS1 combination - Facility Termination per month			UNC1X	U1TF1	69.18										
	EXTENDED DS3 DIGITAL EXTENDED LOOP WITH DEDICATED DS3 INTEROFFICE TRANSPORT																
		DS3 Local Loop in combination - per mile per month			UNC3X	1L5ND	11.08										
		DS3 Local Loop in combination - Facility Termination per month			UNC3X	UE3PX	408.63										
		Interoffice Transport - Dedicated - DS3 - Per Mile per month			UNC3X	1L5XX	4.70										
		Interoffice Transport - Dedicated - DS3 combination - Facility Termination per month			UNC3X	U1TF3	809.05										
	EXTENDED STS-1 DIGITAL EXTENDED LOOP WITH DEDICATED STS-1 INTEROFFICE TRANSPORT																
		STS-1 Local Loop in combination - per mile per month			UNCSX	1L5ND	11.08										
		STS-1 Local Loop in combination - Facility Termination per month			UNCSX	UDLS1	422.98										
		Interoffice Transport - Dedicated - STS-1 combination - per mile per month			UNCSX	1L5XX	4.70										
		Interoffice Transport - Dedicated - STS-1 combination - Facility Termination per month			UNCSX	U1TFS	806.58										

UNBUNDLED NETWORK ELEMENTS - Florida														Attachment: 2 Exh. B			
CATEGORY		RATE ELEMENTS	Interim	Zone	BCS	USOC	RATES ($)					Svc Order Submitted Elec per LSR	Svc Order Submitted Manually per LSR	Incremental Charge - Manual Svc Order vs. Electronic-1st	Incremental Charge - Manual Svc Order vs. Electronic-Add'l	Incremental Charge - Manual Svc Order vs. Electronic-Disc 1st	Incremental Charge - Manual Svc Order vs. Electronic-Disc Add'l
							Rec	Nonrecurring		Nonrecurring Disconnect		OSS Rates ($)					
								First	Add'l	First	Add'l	SOMEC	SOMAN	SOMAN	SOMAN	SOMAN	SOMAN
UNBUNDLED EXCHANGE ACCESS LOOP																	
	2-WIRE HIGH BIT RATE DIGITAL SUBSCRIBER LINE (HDSL) COMPATIBLE LOOP																
		2 Wire Unbundled HDSL Loop including manual service inquiry & facility reservation - Zone 1		1	UHL	UHL2X	8.30										
		2 Wire Unbundled HDSL Loop including manual service inquiry & facility reservation - Zone 2		2	UHL	UHL2X	11.80										
		2 Wire Unbundled HDSL Loop including manual service inquiry & facility reservation - Zone 3		3	UHL	UHL2X	20.94										
		2 Wire Unbundled HDSL Loop without manual service inquiry and facility reservation - Zone 1		1	UHL	UHL2W	8.30										
		2 Wire Unbundled HDSL Loop without manual service inquiry and facility reservation - Zone 2		2	UHL	UHL2W	11.80										
		2 Wire Unbundled HDSL Loop without manual service inquiry and facility reservation - Zone 3		3	UHL	UHL2W	20.94										
	4-WIRE HIGH BIT RATE DIGITAL SUBSCRIBER LINE (HDSL) COMPATIBLE LOOP																
		4 Wire Unbundled HDSL Loop including manual service inquiry and facility reservation - Zone 1		1	UHL	UHL4X	12.49										
		4-Wire Unbundled HDSL Loop including manual service inquiry and facility reservation - Zone 2		2	UHL	UHL4X	17.76										
		4-Wire Unbundled HDSL Loop including manual service inquiry and facility reservation - Zone 3		3	UHL	UHL4X	31.50										
		4-Wire Unbundled HDSL Loop without manual service inquiry and facility reservation - Zone 1		1	UHL	UHL4W	12.49										
		4-Wire Unbundled HDSL Loop without manual service inquiry and facility reservation - Zone 2		2	UHL	UHL4W	17.76										
		4-Wire Unbundled HDSL Loop without manual service inquiry and facility reservation - Zone 3		3	UHL	UHL4W	31.50										
	4-WIRE DS1 DIGITAL LOOP																
		4-Wire DS1 Digital Loop - Zone 1		1	USL	USLXX	81.35										
		4-Wire DS1 Digital Loop - Zone 2		2	USL	USLXX	115.62										
		4-Wire DS1 Digital Loop - Zone 3		3	USL	USLXX	205.15										
HIGH CAPACITY UNBUNDLED LOCAL LOOP																	
		High Capacity Unbundled Local Loop - DS3 - Per Mile per month			UE3	1L5ND	12.56										
		High Capacity Unbundled Local Loop - DS3 - Facility Termination per month			UE3	UE3PX	444.91										
		High Capacity Unbundled Local Loop - STS-1 - Per Mile per month			UDLSX	1L5ND	12.56										
		High Capacity Unbundled Local Loop - STS-1 - Facility Termination per month			UDLSX	UDLS1	490.59										
UNBUNDLED DEDICATED TRANSPORT																	
	INTEROFFICE CHANNEL - DEDICATED TRANSPORT																
		Interoffice Channel - Dedicated Channel - DS1 - Per Mile per month			U1TD1	1L5XX	0.21										
		Interoffice Channel - Dedicated Tranport - DS1 - Facility Termination			U1TD1	U1TF1	101.71										
		Interoffice Channel - Dedicated Transport - DS3 - Per Mile per month			U1TD3	1L5XX	4.45										
		Interoffice Channel - Dedicated Transport - DS3 - Facility Termination per month			U1TD3	U1TF3	1231.65										
		Interoffice Channel - Dedicated Transport - STS-1 - Per Mile per month			U1TS1	1L5XX	4.45										
		Interoffice Channel - Dedicated Transport - STS-1 - Facility Termination			U1TS1	U1TFS	1214.40										
ENHANCED EXTENDED LINK (EELs)																	
	NOTE: The monthly recurring and non-recurring charges below will apply and the Switch-As-Is Charge will not apply for UNE combinations provisioned as ' Ordinarily Combined' Network Elements.																
	NOTE: The monthly recurring and the Switch-As-Is Charge and not the non-recurring charges below will apply for UNE combinations provisioned as ' Currently Combined' Network Elements.																
	EXTENDED 4-WIRE DS1 DIGITAL EXTENDED LOOP WITH DEDICATED DS1 INTEROFFICE TRANSPORT																

UNBUNDLED NETWORK ELEMENTS - Florida														Attachment: 2 Exh. B			
CATEGORY		RATE ELEMENTS	Interim	Zone	BCS	USOC	RATES ($)					Svc Order Submitted Elec per LSR	Svc Order Submitted Manually per LSR	Incremental Charge - Manual Svc Order vs. Electronic-1st	Incremental Charge - Manual Svc Order vs. Electronic-Add'l	Incremental Charge - Manual Svc Order vs. Electronic-Disc 1st	Incremental Charge - Manual Svc Order vs. Electronic-Disc Add'l
							Rec	Nonrecurring		Nonrecurring Disconnect		OSS Rates ($)					
								First	Add'l	First	Add'l	SOMEC	SOMAN	SOMAN	SOMAN	SOMAN	SOMAN
		4-Wire DS1 Digital Loop in Combination - Zone 1		1	UNC1X	USLXX	81.35										
		4-Wire DS1 Digital Loop in Combination - Zone 2		2	UNC1X	USLXX	115.62										
		4-Wire DS1 Digital Loop in Combination - Zone 3		3	UNC1X	USLXX	205.15										
		Interoffice Transport - Dedicated - DS1 combination - Per Mile per month			UNC1X	1L5XX	0.21										
		Interoffice Transport - Dedicated - DS1 combination - Facility Termination per month			UNC1X	U1TF1	101.71										
	EXTENDED DS3 DIGITAL EXTENDED LOOP WITH DEDICATED DS3 INTEROFFICE TRANSPORT																
		DS3 Local Loop in combination - per mile per month			UNC3X	1L5ND	14.44										
		DS3 Local Loop in combination - Facility Termination per month			UNC3X	UE3PX	511.65										
		Interoffice Transport - Dedicated - DS3 - Per Mile per month			UNC3X	1L5XX	4.45										
		Interoffice Transport - Dedicated - DS3 combination - Facility Termination per month			UNC3X	U1TF3	1231.65										
	EXTENDED STS-1 DIGITAL EXTENDED LOOP WITH DEDICATED STS-1 INTEROFFICE TRANSPORT																
		STS-1 Local Loop in combination - per mile per month			UNCSX	1L5ND	14.44										
		STS-1 Local Loop in combination - Facility Termination per month			UNCSX	UDLS1	564.18										
		Interoffice Transport - Dedicated - STS-1 combination - per mile per month			UNCSX	1L5XX	4.45										
		Interoffice Transport - Dedicated - STS-1 combination - Facility Termination per month			UNCSX	U1TFS	1214.40										

UNBUNDLED NETWORK ELEMENTS - Georgia														Attachment: 2 Exh. B			
CATEGORY	RATE ELEMENTS	Interim	Zone	BCS	USOC	RATES ($)					Svc Order Submitted Elec per LSR	Svc Order Submitted Manually per LSR	Incremental Charge - Manual Svc Order vs. Electronic-1st	Incremental Charge - Manual Svc Order vs. Electronic-Add'l	Incremental Charge - Manual Svc Order vs. Electronic-Disc 1st	Incremental Charge - Manual Svc Order vs. Electronic-Disc Add'l
						Rec	Nonrecurring		Nonrecurring Disconnect		OSS Rates ($)					
							First	Add'l	First	Add'l	SOMEC	SOMAN	SOMAN	SOMAN	SOMAN	SOMAN
UNBUNDLED EXCHANGE ACCESS LOOP																
2-WIRE HIGH BIT RATE DIGITAL SUBSCRIBER LINE (HDSL) COMPATIBLE LOOP																
	2 Wire Unbundled HDSL Loop including manual service inquiry & facility reservation - Zone 1	I	1	UHL	UHL2X	9.06										
	2 Wire Unbundled HDSL Loop including manual service inquiry & facility reservation - Zone 2	I	2	UHL	UHL2X	10.45										
	2 Wire Unbundled HDSL Loop including manual service inquiry & facility reservation - Zone 3	I	3	UHL	UHL2X	16.65										
	2 Wire Unbundled HDSL Loop without manual service inquiry and facility reservation - Zone 1	I	1	UHL	UHL2W	9.06										
	2 Wire Unbundled HDSL Loop without manual service inquiry and facility reservation - Zone 2	I	2	UHL	UHL2W	10.45										
	2 Wire Unbundled HDSL Loop without manual service inquiry and facility reservation - Zone 3	I	3	UHL	UHL2W	16.65										
4-WIRE HIGH BIT RATE DIGITAL SUBSCRIBER LINE (HDSL) COMPATIBLE LOOP																
	4 Wire Unbundled HDSL Loop including manual service inquiry and facility reservation - Zone 1	I	1	UHL	UHL4X	11.95										
	4-Wire Unbundled HDSL Loop including manual service inquiry and facility reservation - Zone 2	I	2	UHL	UHL4X	13.80										
	4-Wire Unbundled HDSL Loop including manual service inquiry and facility reservation - Zone 3	I	3	UHL	UHL4X	21.93										
	4-Wire Unbundled HDSL Loop without manual service inquiry and facility reservation - Zone 1	I	1	UHL	UHL4W	11.95										
	4-Wire Unbundled HDSL Loop without manual service inquiry and facility reservation - Zone 2	I	2	UHL	UHL4W	13.80										
	4-Wire Unbundled HDSL Loop without manual service inquiry and facility reservation - Zone 3	I	3	UHL	UHL4W	21.93										
4-WIRE DS1 DIGITAL LOOP																
	4-Wire DS1 Digital Loop - Zone 1		1	USL	USLXX	47.17										
	4-Wire DS1 Digital Loop - Zone 2		2	USL	USLXX	53.37										
	4-Wire DS1 Digital Loop - Zone 3		3	USL	USLXX	71.33										
HIGH CAPACITY UNBUNDLED LOCAL LOOP																
	High Capacity Unbundled Local Loop - DS3 - Per Mile per month			UE3	1L5ND	12.62										
	High Capacity Unbundled Local Loop - DS3 - Facility Termination per month			UE3	UE3PX	291.39										
	High Capacity Unbundled Local Loop - STS-1 - Per Mile per month			UDLSX	1L5ND	12.62										
	High Capacity Unbundled Local Loop - STS-1 - Facility Termination per month			UDLSX	UDLS1	351.23										
UNBUNDLED DEDICATED TRANSPORT																
INTEROFFICE CHANNEL - DEDICATED TRANSPORT																
	Interoffice Channel - Dedicated Channel - DS1 - Per Mile per month			U1TD1	1L5XX	0.13										
	Interoffice Channel - Dedicated Tranport - DS1 - Facility Termination			U1TD1	U1TF1	39.32										
	Interoffice Channel - Dedicated Transport - DS3 - Per Mile per month			U1TD3	1L5XX	2.91										
	Interoffice Channel - Dedicated Transport - DS3 - Facility Termination per month			U1TD3	U1TF3	393.32										
	Interoffice Channel - Dedicated Transport - STS-1 - Per Mile per month			U1TS1	1L5XX	2.92										
	Interoffice Channel - Dedicated Transport - STS-1 - Facility Termination			U1TS1	U1TFS	412.47										
ENHANCED EXTENDED LINK (EELs)																
NOTE: The monthly recurring and non-recurring charges below will apply and the Switch-As-Is Charge will not apply for UNE combinations provisioned as ' Ordinarily Combined' Network Elements.																
NOTE: The monthly recurring and the Switch-As-Is Charge and not the non-recurring charges below will apply for UNE combinations provisioned as ' Currently Combined' Network Elements.																
EXTENDED 4-WIRE DS1 DIGITAL EXTENDED LOOP WITH DEDICATED DS1 INTEROFFICE TRANSPORT																

UNBUNDLED NETWORK ELEMENTS - Georgia														Attachment: 2 Exh. B			
CATEGORY		RATE ELEMENTS	Interim	Zone	BCS	USOC	RATES ($)					Svc Order Submitted Elec per LSR	Svc Order Submitted Manually per LSR	Incremental Charge - Manual Svc Order vs. Electronic-1st	Incremental Charge - Manual Svc Order vs. Electronic-Add'l	Incremental Charge - Manual Svc Order vs. Electronic-Disc 1st	Incremental Charge - Manual Svc Order vs. Electronic-Disc Add'l
							Rec	Nonrecurring		Nonrecurring Disconnect		OSS Rates ($)					
								First	Add'l	First	Add'l	SOMEC	SOMAN	SOMAN	SOMAN	SOMAN	SOMAN
		4-Wire DS1 Digital Loop in Combination - Zone 1		1	UNC1X	USLXX	47.17										
		4-Wire DS1 Digital Loop in Combination - Zone 2		2	UNC1X	USLXX	53.37										
		4-Wire DS1 Digital Loop in Combination - Zone 3		3	UNC1X	USLXX	71.33										
		Interoffice Transport - Dedicated - DS1 combination - Per Mile per month			UNC1X	1L5XX	0.13										
		Interoffice Transport - Dedicated - DS1 combination - Facility Termination per month			UNC1X	U1TF1	39.32										
	EXTENDED DS3 DIGITAL EXTENDED LOOP WITH DEDICATED DS3 INTEROFFICE TRANSPORT																
		DS3 Local Loop in combination - per mile per month			UNC3X	1L5ND	14.51										
		DS3 Local Loop in combination - Facility Termination per month			UNC3X	UE3PX	335.10										
		Interoffice Transport - Dedicated - DS3 - Per Mile per month			UNC3X	1L5XX	2.91										
		Interoffice Transport - Dedicated - DS3 combination - Facility Termination per month			UNC3X	U1TF3	393.32										
	EXTENDED STS-1 DIGITAL EXTENDED LOOP WITH DEDICATED STS-1 INTEROFFICE TRANSPORT																
		STS-1 Local Loop in combination - per mile per month			UNCSX	1L5ND	14.51										
		STS-1 Local Loop in combination - Facility Termination per month			UNCSX	UDLS1	403.92										
		Interoffice Transport - Dedicated - STS-1 combination - per mile per month			UNCSX	1L5XX	2.91										
		Interoffice Transport - Dedicated - STS-1 combination - Facility Termination per month			UNCSX	U1TFS	412.47										

UNBUNDLED NETWORK ELEMENTS - Kentucky														Attachment: 2 Exh. B			
CATEGORY		RATE ELEMENTS	Interim	Zone	BCS	USOC	RATES ($)					Svc Order Submitted Elec per LSR	Svc Order Submitted Manually per LSR	Incremental Charge - Manual Svc Order vs. Electronic-1st	Incremental Charge - Manual Svc Order vs. Electronic-Add'l	Incremental Charge - Manual Svc Order vs. Electronic-Disc 1st	Incremental Charge - Manual Svc Order vs. Electronic-Disc Add'l
							Rec	Nonrecurring		Nonrecurring Disconnect		OSS Rates ($)					
								First	Add'l	First	Add'l	SOMEC	SOMAN	SOMAN	SOMAN	SOMAN	SOMAN
UNBUNDLED EXCHANGE ACCESS LOOP																	
	2-WIRE HIGH BIT RATE DIGITAL SUBSCRIBER LINE (HDSL) COMPATIBLE LOOP																
		2 Wire Unbundled HDSL Loop including manual service inquiry & facility reservation - Zone 1		1	UHL	UHL2X	10.06										
		2 Wire Unbundled HDSL Loop including manual service inquiry & facility reservation - Zone 2		2	UHL	UHL2X	10.99										
		2 Wire Unbundled HDSL Loop including manual service inquiry & facility reservation - Zone 3		3	UHL	UHL2X	12.20										
		2 Wire Unbundled HDSL Loop without manual service inquiry and facility reservation - Zone 1		1	UHL	UHL2W	10.06										
		2 Wire Unbundled HDSL Loop without manual service inquiry and facility reservation - Zone 2		2	UHL	UHL2W	10.99										
		2 Wire Unbundled HDSL Loop without manual service inquiry and facility reservation - Zone 3		3	UHL	UHL2W	12.20										
	4-WIRE HIGH BIT RATE DIGITAL SUBSCRIBER LINE (HDSL) COMPATIBLE LOOP																
		4 Wire Unbundled HDSL Loop including manual service inquiry and facility reservation - Zone 1		1	UHL	UHL4X	16.04										
		4-Wire Unbundled HDSL Loop including manual service inquiry and facility reservation - Zone 2	I	2	UHL	UHL4X	18.03										
		4-Wire Unbundled HDSL Loop including manual service inquiry and facility reservation - Zone 3		3	UHL	UHL4X	19.53										
		4-Wire Unbundled HDSL Loop without manual service inquiry and facility reservation - Zone 1		1	UHL	UHL4W	16.04										
		4-Wire Unbundled HDSL Loop without manual service inquiry and facility reservation - Zone 2		2	UHL	UHL4W	18.03										
		4-Wire Unbundled HDSL Loop without manual service inquiry and facility reservation - Zone 3		3	UHL	UHL4W	19.53										
	4-WIRE DS1 DIGITAL LOOP																
		4-Wire DS1 Digital Loop - Zone 1		1	USL	USLXX	99.44										
		4-Wire DS1 Digital Loop - Zone 2		2	USL	USLXX	131.22										
		4-Wire DS1 Digital Loop - Zone 3		3	USL	USLXX	342.42										
HIGH CAPACITY UNBUNDLED LOCAL LOOP																	
		High Capacity Unbundled Local Loop - DS3 - Per Mile per month			UE3	1L5ND	10.64										
		High Capacity Unbundled Local Loop - DS3 - Facility Termination per month			UE3	UE3PX	354.56										
		High Capacity Unbundled Local Loop - STS-1 - Per Mile per month			UDLSX	1L5ND	10.64										
		High Capacity Unbundled Local Loop - STS-1 - Facility Termination per month			UDLSX	UDLS1	368.59										
UNBUNDLED DEDICATED TRANSPORT																	
	INTEROFFICE CHANNEL - DEDICATED TRANSPORT																
		Interoffice Channel - Dedicated Channel - DS1 - Per Mile per month			U1TD1	1L5XX	0.26										
		Interoffice Channel - Dedicated Tranport - DS1 - Facility Termination			U1TD1	U1TF1	110.45										
		Interoffice Channel - Dedicated Transport - DS3 - Per Mile per month			U1TD3	1L5XX	5.72										
		Interoffice Channel - Dedicated Transport - DS3 - Facility Termination per month			U1TD3	U1TF3	1351.42										
		Interoffice Channel - Dedicated Transport - STS-1 - Per Mile per month			U1TS1	1L5XX	5.72										
		Interoffice Channel - Dedicated Transport - STS-1 - Facility Termination			U1TS1	U1TFS	1321.94										
ENHANCED EXTENDED LINK (EELs)																	
	NOTE: The monthly recurring and non-recurring charges below will apply and the Switch-As-Is Charge will not apply for UNE combinations provisioned as ' Ordinarily Combined' Network Elements.																
	NOTE: The monthly recurring and the Switch-As-Is Charge and not the non-recurring charges below will apply for UNE combinations provisioned as ' Currently Combined' Network Elements.																
	EXTENDED 4-WIRE DS1 DIGITAL EXTENDED LOOP WITH DEDICATED DS1 INTEROFFICE TRANSPORT																

UNBUNDLED NETWORK ELEMENTS - Kentucky														Attachment: 2 Exh. B			
CATEGORY		RATE ELEMENTS	Interim	Zone	BCS	USOC	RATES ($)					Svc Order Submitted Elec per LSR	Svc Order Submitted Manually per LSR	Incremental Charge - Manual Svc Order vs. Electronic-1st	Incremental Charge - Manual Svc Order vs. Electronic-Add'l	Incremental Charge - Manual Svc Order vs. Electronic-Disc 1st	Incremental Charge - Manual Svc Order vs. Electronic-Disc Add'l
							Rec	Nonrecurring		Nonrecurring Disconnect		OSS Rates ($)					
								First	Add'l	First	Add'l	SOMEC	SOMAN	SOMAN	SOMAN	SOMAN	SOMAN
		4-Wire DS1 Digital Loop in Combination - Zone 1		1	UNC1X	USLXX	99.44										
		4-Wire DS1 Digital Loop in Combination - Zone 2		2	UNC1X	USLXX	131.22										
		4-Wire DS1 Digital Loop in Combination - Zone 3		3	UNC1X	USLXX	342.42										
		Interoffice Transport - Dedicated - DS1 combination - Per Mile per month			UNC1X	1L5XX	0.22										
		Interoffice Transport - Dedicated - DS1 combination - Facility Termination per month			UNC1X	U1TF1	90.87										
	EXTENDED DS3 DIGITAL EXTENDED LOOP WITH DEDICATED DS3 INTEROFFICE TRANSPORT																
		DS3 Local Loop in combination - per mile per month			UNC3X	1L5ND	12.23										
		DS3 Local Loop in combination - Facility Termination per month			UNC3X	UE3PX	407.74										
		Interoffice Transport - Dedicated - DS3 - Per Mile per month			UNC3X	1L5XX	4.70										
		Interoffice Transport - Dedicated - DS3 combination - Facility Termination per month			UNC3X	U1TF3	1111.92										
	EXTENDED STS-1 DIGITAL EXTENDED LOOP WITH DEDICATED STS-1 INTEROFFICE TRANSPORT																
		STS-1 Local Loop in combination - per mile per month			UNCSX	1L5ND	12.23										
		STS-1 Local Loop in combination - Facility Termination per month			UNCSX	UDLS1	423.87										
		Interoffice Transport - Dedicated - STS-1 combination - per mile per month			UNCSX	1L5XX	4.70										
		Interoffice Transport - Dedicated - STS-1 combination - Facility Termination per month			UNCSX	U1TFS	1087.66										

UNBUNDLED NETWORK ELEMENTS - Louisiana														Attachment: 2 Exh. B			
CATEGORY	RATE ELEMENTS	Interim	Zone	BCS	USOC	RATES ($)					Svc Order Submitted Elec per LSR	Svc Order Submitted Manually per LSR	Incremental Charge - Manual Svc Order vs. Electronic-1st	Incremental Charge - Manual Svc Order vs. Electronic-Add'l	Incremental Charge - Manual Svc Order vs. Electronic-Disc 1st	Incremental Charge - Manual Svc Order vs. Electronic-Disc Add'l
						Rec	Nonrecurring		Nonrecurring Disconnect		OSS Rates ($)					
							First	Add'l	First	Add'l	SOMEC	SOMAN	SOMAN	SOMAN	SOMAN	SOMAN
UNBUNDLED EXCHANGE ACCESS LOOP																
2-WIRE HIGH BIT RATE DIGITAL SUBSCRIBER LINE (HDSL) COMPATIBLE LOOP																
	2 Wire Unbundled HDSL Loop including manual service inquiry & facility reservation - Zone 1		1	UHL	UHL2X	11.26										
	2 Wire Unbundled HDSL Loop including manual service inquiry & facility reservation - Zone 2		2	UHL	UHL2X	13.25										
	2 Wire Unbundled HDSL Loop including manual service inquiry & facility reservation - Zone 3		3	UHL	UHL2X	14.65										
	2 Wire Unbundled HDSL Loop without manual service inquiry and facility reservation - Zone 1		1	UHL	UHL2W	11.26										
	2 Wire Unbundled HDSL Loop without manual service inquiry and facility reservation - Zone 2		2	UHL	UHL2W	13.25										
	2 Wire Unbundled HDSL Loop without manual service inquiry and facility reservation - Zone 3		3	UHL	UHL2W	14.65										
4-WIRE HIGH BIT RATE DIGITAL SUBSCRIBER LINE (HDSL) COMPATIBLE LOOP																
	4 Wire Unbundled HDSL Loop including manual service inquiry and facility reservation - Zone 1		1	UHL	UHL4X	18.68										
	4-Wire Unbundled HDSL Loop including manual service inquiry and facility reservation - Zone 2		2	UHL	UHL4X	19.15										
	4-Wire Unbundled HDSL Loop including manual service inquiry and facility reservation - Zone 3		3	UHL	UHL4X	19.94										
	4-Wire Unbundled HDSL Loop without manual service inquiry and facility reservation - Zone 1		1	UHL	UHL4W	18.68										
	4-Wire Unbundled HDSL Loop without manual service inquiry and facility reservation - Zone 2		2	UHL	UHL4W	19.15										
	4-Wire Unbundled HDSL Loop without manual service inquiry and facility reservation - Zone 3		3	UHL	UHL4W	19.94										
4-WIRE DS1 DIGITAL LOOP																
	4-Wire DS1 Digital Loop - Zone 1		1	USL	USLXX	98.56										
	4-Wire DS1 Digital Loop - Zone 2		2	USL	USLXX	224.20										
	4-Wire DS1 Digital Loop - Zone 3		3	USL	USLXX	565.73										
HIGH CAPACITY UNBUNDLED LOCAL LOOP																
	High Capacity Unbundled Local Loop - DS3 - Per Mile per month			UE3	1L5ND	11.55										
	High Capacity Unbundled Local Loop - DS3 - Facility Termination per month			UE3	UE3PX	416.69										
	High Capacity Unbundled Local Loop - STS-1 - Per Mile per month			UDLSX	1L5ND	11.55										
	High Capacity Unbundled Local Loop - STS-1 - Facility Termination per month			UDLSX	UDLS1	430.74										
UNBUNDLED DEDICATED TRANSPORT																
INTEROFFICE CHANNEL - DEDICATED TRANSPORT																
	Interoffice Channel - Dedicated Channel - DS1 - Per Mile per month			U1TD1	1L5XX	0.30										
	Interoffice Channel - Dedicated Tranport - DS1 - Facility Termination			U1TD1	U1TF1	81.04										
	Interoffice Channel - Dedicated Transport - DS3 - Per Mile per month			U1TD3	1L5XX	6.95										
	Interoffice Channel - Dedicated Transport - DS3 - Facility Termination per month			U1TD3	U1TF3	978.02										
	Interoffice Channel - Dedicated Transport - STS-1 - Per Mile per month			U1TS1	1L5XX	6.95										
	Interoffice Channel - Dedicated Transport - STS-1 - Facility Termination			U1TS1	U1TFS	954.72										
ENHANCED EXTENDED LINK (EELs)																
NOTE: The monthly recurring and non-recurring charges below will apply and the Switch-As-Is Charge will not apply for UNE combinations provisioned as ' Ordinarily Combined' Network Elements.																
NOTE: The monthly recurring and the Switch-As-Is Charge and not the non-recurring charges below will apply for UNE combinations provisioned as ' Currently Combined' Network Elements.																
EXTENDED 4-WIRE DS1 DIGITAL EXTENDED LOOP WITH DEDICATED DS1 INTEROFFICE TRANSPORT																

UNBUNDLED NETWORK ELEMENTS - Louisiana														Attachment: 2 Exh. B			
CATEGORY		RATE ELEMENTS	Interim	Zone	BCS	USOC	RATES ($)					Svc Order Submitted Elec per LSR	Svc Order Submitted Manually per LSR	Incremental Charge - Manual Svc Order vs. Electronic-1st	Incremental Charge - Manual Svc Order vs. Electronic-Add'l	Incremental Charge - Manual Svc Order vs. Electronic-Disc 1st	Incremental Charge - Manual Svc Order vs. Electronic-Disc Add'l
							Rec	Nonrecurring		Nonrecurring Disconnect		OSS Rates ($)					
								First	Add'l	First	Add'l	SOMEC	SOMAN	SOMAN	SOMAN	SOMAN	SOMAN
		4-Wire DS1 Digital Loop in Combination - Zone 1		1	UNC1X	USLXX	98.56										
		4-Wire DS1 Digital Loop in Combination - Zone 2		2	UNC1X	USLXX	224.20										
		4-Wire DS1 Digital Loop in Combination - Zone 3		3	UNC1X	USLXX	565.73										
		Interoffice Transport - Dedicated - DS1 combination - Per Mile per month			UNC1X	1L5XX	0.30										
		Interoffice Transport - Dedicated - DS1 combination - Facility Termination per month			UNC1X	U1TF1	81.04										
	EXTENDED DS3 DIGITAL EXTENDED LOOP WITH DEDICATED DS3 INTEROFFICE TRANSPORT																
		DS3 Local Loop in combination - per mile per month			UNC3X	1L5ND	13.28										
		DS3 Local Loop in combination - Facility Termination per month			UNC3X	UE3PX	479.19										
		Interoffice Transport - Dedicated - DS3 - Per Mile per month			UNC3X	1L5XX	6.95										
		Interoffice Transport - Dedicated - DS3 combination - Facility Termination per month			UNC3X	U1TF3	978.02										
	EXTENDED STS-1 DIGITAL EXTENDED LOOP WITH DEDICATED STS-1 INTEROFFICE TRANSPORT																
		STS-1 Local Loop in combination - per mile per month			UNCSX	1L5ND	13.28										
		STS-1 Local Loop in combination - Facility Termination per month			UNCSX	UDLS1	495.36										
		Interoffice Transport - Dedicated - STS-1 combination - per mile per month			UNCSX	1L5XX	6.95										
		Interoffice Transport - Dedicated - STS-1 combination - Facility Termination per month			UNCSX	U1TFS	954.72										

UNBUNDLED NETWORK ELEMENTS - Mississippi														Attachment: 2 Exh. B			
CATEGORY		RATE ELEMENTS	Interim	Zone	BCS	USOC	RATES ($)					Svc Order Submitted Elec per LSR	Svc Order Submitted Manually per LSR	Incremental Charge - Manual Svc Order vs. Electronic-1st	Incremental Charge - Manual Svc Order vs. Electronic-Add'l	Incremental Charge - Manual Svc Order vs. Electronic-Disc 1st	Incremental Charge - Manual Svc Order vs. Electronic-Disc Add'l
							Rec	Nonrecurring		Nonrecurring Disconnect		OSS Rates ($)					
									Add'l		Add'l	SOMEC	SOMAN	SOMAN	SOMAN	SOMAN	SOMAN
UNBUNDLED EXCHANGE ACCESS LOOP																	
	2-WIRE HIGH BIT RATE DIGITAL SUBSCRIBER LINE (HDSL) COMPATIBLE LOOP																
		2 Wire Unbundled HDSL Loop including manual service inquiry & facility reservation - Zone 1		1	UHL	UHL2X	10.06										
		2 Wire Unbundled HDSL Loop including manual service inquiry & facility reservation - Zone 2		2	UHL	UHL2X	10.60										
		2 Wire Unbundled HDSL Loop including manual service inquiry & facility reservation - Zone 3		3	UHL	UHL2X	11.35										
		2 Wire Unbundled HDSL Loop including manual service inquiry & facility reservation - Zone 4		4	UHL	UHL2X	12.03										
		2 Wire Unbundled HDSL Loop without manual service inquiry and facility reservation - Zone 1		1	UHL	UHL2W	10.06										
		2 Wire Unbundled HDSL Loop without manual service inquiry and facility reservation - Zone 2		2	UHL	UHL2W	10.60										
		2 Wire Unbundled HDSL Loop without manual service inquiry and facility reservation - Zone 3		3	UHL	UHL2W	11.35										
		2 Wire Unbundled HDSL Loop without manual service inquiry and facility reservation - Zone 4		4	UHL	UHL2W	12.03										
	4-WIRE HIGH BIT RATE DIGITAL SUBSCRIBER LINE (HDSL) COMPATIBLE LOOP																
		4 Wire Unbundled HDSL Loop including manual service inquiry and facility reservation - Zone 1		1	UHL	UHL4X	15.85										
		4-Wire Unbundled HDSL Loop including manual service inquiry and facility reservation - Zone 2		2	UHL	UHL4X	15.44										
		4-Wire Unbundled HDSL Loop including manual service inquiry and facility reservation - Zone 3		3	UHL	UHL4X	17.93										
		4-Wire Unbundled HDSL Loop including manual service inquiry and facility reservation - Zone 4		4	UHL	UHL4X	16.63										
		4-Wire Unbundled HDSL Loop without manual service inquiry and facility reservation - Zone 1		1	UHL	UHL4W	15.85										
		4-Wire Unbundled HDSL Loop without manual service inquiry and facility reservation - Zone 2		2	UHL	UHL4W	15.44										
		4-Wire Unbundled HDSL Loop without manual service inquiry and facility reservation - Zone 3		3	UHL	UHL4W	17.93										
		4-Wire Unbundled HDSL Loop without manual service inquiry and facility reservation - Zone 4		4	UHL	UHL4W	16.63										
	4-WIRE DS1 DIGITAL LOOP																
		4-Wire DS1 Digital Loop - Zone 1		1	USL	USLXX	118.62										
		4-Wire DS1 Digital Loop - Zone 2		2	USL	USLXX	148.79										
		4-Wire DS1 Digital Loop - Zone 3		3	USL	USLXX	237.75										
		4-Wire DS1 Digital Loop - Zone 4		4	USL	USLXX	527.23										
HIGH CAPACITY UNBUNDLED LOCAL LOOP																	
		High Capacity Unbundled Local Loop - DS3 - Per Mile per month			UE3	1L5ND	12.88										
		High Capacity Unbundled Local Loop - DS3 - Facility Termination per month			UE3	UE3PX	375.07										
		High Capacity Unbundled Local Loop - STS-1 - Per Mile per month			UDLSX	1L5ND	12.88										
		High Capacity Unbundled Local Loop - STS-1 - Facility Termination per month			UDLSX	UDLS1	389.33										
UNBUNDLED DEDICATED TRANSPORT																	
	INTEROFFICE CHANNEL - DEDICATED TRANSPORT																
		Interoffice Channel - Dedicated Channel - DS1 - Per Mile per month			U1TD1	1L5XX	0.23										
		Interoffice Channel - Dedicated Tranport - DS1 - Facility Termination			U1TD1	U1TF1	65.93										
		Interoffice Channel - Dedicated Transport - DS3 - Per Mile per month			U1TD3	1L5XX	5.47										

UNBUNDLED NETWORK ELEMENTS - Mississippi														Attachment: 2 Exh. B			
CATEGORY		RATE ELEMENTS	Interim	Zone	BCS	USOC	RATES ($)					Svc Order Submitted Elec per LSR	Svc Order Submitted Manually per LSR	Incremental Charge - Manual Svc Order vs. Electronic-1st	Incremental Charge - Manual Svc Order vs. Electronic-Add'l	Incremental Charge - Manual Svc Order vs. Electronic-Disc 1st	Incremental Charge - Manual Svc Order vs. Electronic-Disc Add'l
							Rec	Nonrecurring		Nonrecurring Disconnect		OSS Rates ($)					
									Add'l		Add'l	SOMEC	SOMAN	SOMAN	SOMAN	SOMAN	SOMAN
		Interoffice Channel - Dedicated Transport - DS3 - Facility Termination per month			U1TD3	U1TF3	738.18										
		Interoffice Channel - Dedicated Transport - STS-1 - Per Mile per month			U1TS1	1L5XX	5.47										
		Interoffice Channel - Dedicated Transport - STS-1 - Facility Termination			U1TS1	U1TFS	740.84										
ENHANCED EXTENDED LINK (EELs)																	
	NOTE: The monthly recurring and non-recurring charges below will apply and the Switch-As-Is Charge will not apply for UNE combinations provisioned as ' Ordinarily Combined' Network Elements.																
	NOTE: The monthly recurring and the Switch-As-Is Charge and not the non-recurring charges below will apply for UNE combinations provisioned as ' Currently Combined' Network Elements.																
	EXTENDED 4-WIRE DS1 DIGITAL EXTENDED LOOP WITH DEDICATED DS1 INTEROFFICE TRANSPORT																
		4-Wire DS1 Digital Loop in Combination - Zone 1		1	UNC1X	USLXX	90.94										
		4-Wire DS1 Digital Loop in Combination - Zone 2		2	UNC1X	USLXX	148.79										
		4-Wire DS1 Digital Loop in Combination - Zone 3		3	UNC1X	USLXX	237.75										
		4-wire DS1 Digital Lcoal Loop in Combination - Zone 4		4	UNC1X	USLXX	527.23										
		Interoffice Transport - Dedicated - DS1 combination - Per Mile per month			UNC1X	1L5XX	0.21										
		Interoffice Transport - Dedicated - DS1 combination - Facility Termination per month			UNC1X	U1TF1	59.48										
	EXTENDED DS3 DIGITAL EXTENDED LOOP WITH DEDICATED DS3 INTEROFFICE TRANSPORT																
		DS3 Local Loop in combination - per mile per month			UNC3X	1L5ND	14.81										
		DS3 Local Loop in combination - Facility Termination per month			UNC3X	UE3PX	431.33										
		Interoffice Transport - Dedicated - DS3 - Per Mile per month			UNC3X	1L5XX	5.47										
		Interoffice Transport - Dedicated - DS3 combination - Facility Termination per month			UNC3X	U1TF3	738.18										
	EXTENDED STS-1 DIGITAL EXTENDED LOOP WITH DEDICATED STS-1 INTEROFFICE TRANSPORT																
		STS-1 Local Loop in combination - per mile per month			UNCSX	1L5ND	14.81										
		STS-1 Local Loop in combination - Facility Termination per month			UNCSX	UDLS1	447.73										
		Interoffice Transport - Dedicated - STS-1 combination - per mile per month			UNCSX	1L5XX	5.47										
		Interoffice Transport - Dedicated - STS-1 combination - Facility Termination per month			UNCSX	U1TFS	740.84										

UNBUNDLED NETWORK ELEMENTS - North Carolina														Attachment: 2 Exh. B			
CATEGORY		RATE ELEMENTS	Interim	Zone	BCS	USOC	RATES ($)					Svc Order Submitted Elec per LSR	Svc Order Submitted Manually per LSR	Incremental Charge - Manual Svc Order vs. Electronic-1st	Incremental Charge - Manual Svc Order vs. Electronic-Add'l	Incremental Charge - Manual Svc Order vs. Electronic-Disc 1st	Incremental Charge - Manual Svc Order vs. Electronic-Disc Add'l
							Rec	Nonrecurring		Nonrecurring Disconnect		OSS Rates ($)					
								First	Add'l	First	Add'l	SOMEC	SOMAN	SOMAN	SOMAN	SOMAN	SOMAN
	NOTE: The NC rates in this Exhibit B are applicable to "embedded base" services as of March 10, 2005.																
UNBUNDLED EXCHANGE ACCESS LOOP																	
	2-WIRE HIGH BIT RATE DIGITAL SUBSCRIBER LINE (HDSL) COMPATIBLE LOOP																
		2 Wire Unbundled HDSL Loop including manual service inquiry & facility reservation - Zone 1		1	UHL	UHL2X	10.36										
		2 Wire Unbundled HDSL Loop including manual service inquiry & facility reservation - Zone 2		2	UHL	UHL2X	17.10										
		2 Wire Unbundled HDSL Loop including manual service inquiry & facility reservation - Zone 3		3	UHL	UHL2X	26.24										
		2 Wire Unbundled HDSL Loop without manual service inquiry and facility reservation - Zone 1		1	UHL	UHL2W	10.36										
		2 Wire Unbundled HDSL Loop without manual service inquiry and facility reservation - Zone 2		2	UHL	UHL2W	17.10										
		2 Wire Unbundled HDSL Loop without manual service inquiry and facility reservation - Zone 3		3	UHL	UHL2W	26.24										
	4-WIRE HIGH BIT RATE DIGITAL SUBSCRIBER LINE (HDSL) COMPATIBLE LOOP																
		4 Wire Unbundled HDSL Loop including manual service inquiry and facility reservation - Zone 1		1	UHL	UHL4X	12.21										
		4-Wire Unbundled HDSL Loop including manual service inquiry and facility reservation - Zone 2		2	UHL	UHL4X	20.32										
		4-Wire Unbundled HDSL Loop including manual service inquiry and facility reservation - Zone 3		3	UHL	UHL4X	31.33										
		4-Wire Unbundled HDSL Loop without manual service inquiry and facility reservation - Zone 1		1	UHL	UHL4W	12.21										
		4-Wire Unbundled HDSL Loop without manual service inquiry and facility reservation - Zone 2		2	UHL	UHL4W	20.32										
		4-Wire Unbundled HDSL Loop without manual service inquiry and facility reservation - Zone 3		3	UHL	UHL4W	31.33										
	4-WIRE DS1 DIGITAL LOOP																
		4-Wire DS1 Digital Loop - Zone 1		1	USL	USLXX	54.74										
		4-Wire DS1 Digital Loop - Zone 2		2	USL	USLXX	97.01										
		4-Wire DS1 Digital Loop - Zone 3		3	USL	USLXX	154.43										
HIGH CAPACITY UNBUNDLED LOCAL LOOP																	
		High Capacity Unbundled Local Loop - DS3 - Per Mile per month			UE3	1L5ND	15.33										
		High Capacity Unbundled Local Loop - DS3 - Facility Termination per month			UE3	UE3PX	518.29										
		High Capacity Unbundled Local Loop - STS-1 - Per Mile per month			UDLSX	1L5ND	15.33										
		High Capacity Unbundled Local Loop - STS-1 - Facility Termination per month			UDLSX	UDLS1	533.90										
UNBUNDLED DEDICATED TRANSPORT																	
	INTEROFFICE CHANNEL - DEDICATED TRANSPORT																
		Interoffice Channel - Dedicated Channel - DS1 - Per Mile per month			U1TD1	1L5XX	0.66										
		Interoffice Channel - Dedicated Tranport - DS1 - Facility Termination			U1TD1	U1TF1	81.98										
		Interoffice Channel - Dedicated Transport - DS3 - Per Mile per month			U1TD3	1L5XX	14.93										
		Interoffice Channel - Dedicated Transport - DS3 - Facility Termination per month			U1TD3	U1TF3	828.44										
		Interoffice Channel - Dedicated Transport - STS-1 - Per Mile per month			U1TS1	1L5XX	7.06										
		Interoffice Channel - Dedicated Transport - STS-1 - Facility Termination			U1TS1	U1TFS	908.93										
ENHANCED EXTENDED LINK (EELs)																	
	NOTE: The monthly recurring and non-recurring charges below will apply and the Switch-As-Is Charge will not apply for UNE combinations provisioned as ' Ordinarily Combined' Network Elements.																
	NOTE: The monthly recurring and the Switch-As-Is Charge and not the non-recurring charges below will apply for UNE combinations provisioned as ' Currently Combined' Network Elements.																

UNBUNDLED NETWORK ELEMENTS - North Carolina														Attachment: 2 Exh. B			
CATEGORY		RATE ELEMENTS	Interim	Zone	BCS	USOC	RATES ($)					Svc Order Submitted Elec per LSR	Svc Order Submitted Manually per LSR	Incremental Charge - Manual Svc Order vs. Electronic-1st	Incremental Charge - Manual Svc Order vs. Electronic-Add'l	Incremental Charge - Manual Svc Order vs. Electronic-Disc 1st	Incremental Charge - Manual Svc Order vs. Electronic-Disc Add'l
							Rec	Nonrecurring		Nonrecurring Disconnect		OSS Rates ($)					
								First	Add'l	First	Add'l	SOMEC	SOMAN	SOMAN	SOMAN	SOMAN	SOMAN
	EXTENDED 4-WIRE DS1 DIGITAL EXTENDED LOOP WITH DEDICATED DS1 INTEROFFICE TRANSPORT																
		4-Wire DS1 Digital Loop in Combination - Zone 1		1	UNC1X	USLXX	54.74										
		4-Wire DS1 Digital Loop in Combination - Zone 2		2	UNC1X	USLXX	97.01										
		4-Wire DS1 Digital Loop in Combination - Zone 3		3	UNC1X	USLXX	154.43										
		Interoffice Transport - Dedicated - DS1 combination - Per Mile per month			UNC1X	1L5XX	0.66										
		Interoffice Transport - Dedicated - DS1 combination - Facility Termination per month			UNC1X	U1TF1	81.98										
	EXTENDED DS3 DIGITAL EXTENDED LOOP WITH DEDICATED DS3 INTEROFFICE TRANSPORT																
		DS3 Local Loop in combination - per mile per month			UNC3X	1L5ND	15.33										
		DS3 Local Loop in combination - Facility Termination per month			UNC3X	UE3PX	518.29										
		Interoffice Transport - Dedicated - DS3 - Per Mile per month			UNC3X	1L5XX	14.93										
		Interoffice Transport - Dedicated - DS3 combination - Facility Termination per month			UNC3X	U1TF3	828.44										
	EXTENDED STS-1 DIGITAL EXTENDED LOOP WITH DEDICATED STS-1 INTEROFFICE TRANSPORT																
		STS-1 Local Loop in combination - per mile per month			UNCSX	1L5ND	15.33										
		STS-1 Local Loop in combination - Facility Termination per month			UNCSX	UDLS1	533.90										
		Interoffice Transport - Dedicated - STS-1 combination - per mile per month			UNCSX	1L5XX	7.06										
		Interoffice Transport - Dedicated - STS-1 combination - Facility Termination per month			UNCSX	U1TFS	908.93										

UNBUNDLED NETWORK ELEMENTS - South Carolina														Attachment: 2 Exh. B			
CATEGORY		RATE ELEMENTS	Interim	Zone	BCS	USOC	RATES ($)					Svc Order Submitted Elec per LSR	Svc Order Submitted Manually per LSR	Incremental Charge - Manual Svc Order vs. Electronic-1st	Incremental Charge - Manual Svc Order vs. Electronic-Add'l	Incremental Charge - Manual Svc Order vs. Electronic-Disc 1st	Incremental Charge - Manual Svc Order vs. Electronic-Disc Add'l
							Rec	Nonrecurring		Nonrecurring Disconnect		OSS Rates ($)					
								First	Add'l	First	Add'l	SOMEC	SOMAN	SOMAN	SOMAN	SOMAN	SOMAN
UNBUNDLED EXCHANGE ACCESS LOOP																	
	2-WIRE HIGH BIT RATE DIGITAL SUBSCRIBER LINE (HDSL) COMPATIBLE LOOP																
		2 Wire Unbundled HDSL Loop including manual service inquiry & facility reservation - Zone 1		1	UHL	UHL2X	11.02										
		2 Wire Unbundled HDSL Loop including manual service inquiry & facility reservation - Zone 2		2	UHL	UHL2X	12.56										
		2 Wire Unbundled HDSL Loop including manual service inquiry & facility reservation - Zone 3		3	UHL	UHL2X	13.11										
		2 Wire Unbundled HDSL Loop without manual service inquiry and facility reservation - Zone 1		1	UHL	UHL2W	11.02										
		2 Wire Unbundled HDSL Loop without manual service inquiry and facility reservation - Zone 2		2	UHL	UHL2W	12.56										
		2 Wire Unbundled HDSL Loop without manual service inquiry and facility reservation - Zone 3		3	UHL	UHL2W	13.11										
	4-WIRE HIGH BIT RATE DIGITAL SUBSCRIBER LINE (HDSL) COMPATIBLE LOOP																
		4 Wire Unbundled HDSL Loop including manual service inquiry and facility reservation - Zone 1		1	UHL	UHL4X	18.42										
		4-Wire Unbundled HDSL Loop including manual service inquiry and facility reservation - Zone 2		2	UHL	UHL4X	16.48										
		4-Wire Unbundled HDSL Loop including manual service inquiry and facility reservation - Zone 3		3	UHL	UHL4X	19.37										
		4-Wire Unbundled HDSL Loop without manual service inquiry and facility reservation - Zone 1		1	UHL	UHL4W	18.42										
		4-Wire Unbundled HDSL Loop without manual service inquiry and facility reservation - Zone 2		2	UHL	UHL4W	16.48										
		4-Wire Unbundled HDSL Loop without manual service inquiry and facility reservation - Zone 3		3	UHL	UHL4W	19.37										
	4-WIRE DS1 DIGITAL LOOP																
		4-Wire DS1 Digital Loop - Zone 1		1	USL	USLXX	91.44										
		4-Wire DS1 Digital Loop - Zone 2		2	USL	USLXX	156.40										
		4-Wire DS1 Digital Loop - Zone 3		3	USL	USLXX	263.52										
HIGH CAPACITY UNBUNDLED LOCAL LOOP																	
		High Capacity Unbundled Local Loop - DS3 - Per Mile per month			UE3	1L5ND	14.10										
		High Capacity Unbundled Local Loop - DS3 - Facility Termination per month			UE3	UE3PX	352.31										
		High Capacity Unbundled Local Loop - STS-1 - Per Mile per month			UDLSX	1L5ND	14.10										
		High Capacity Unbundled Local Loop - STS-1 - Facility Termination per month			UDLSX	UDLS1	360.51										
UNBUNDLED DEDICATED TRANSPORT																	
	INTEROFFICE CHANNEL - DEDICATED TRANSPORT																
		Interoffice Channel - Dedicated Channel - DS1 - Per Mile per month			U1TD1	1L5XX	0.39										
		Interoffice Channel - Dedicated Tranport - DS1 - Facility Termination			U1TD1	U1TF1	88.71										
		Interoffice Channel - Dedicated Transport - DS3 - Per Mile per month			U1TD3	1L5XX	9.22										
		Interoffice Channel - Dedicated Transport - DS3 - Facility Termination per month			U1TD3	U1TF3	1012.75										
		Interoffice Channel - Dedicated Transport - STS-1 - Per Mile per month			U1TS1	1L5XX	9.22										
		Interoffice Channel - Dedicated Transport - STS-1 - Facility Termination			U1TS1	U1TFS	1012.63										
ENHANCED EXTENDED LINK (EELs)																	
	NOTE: The monthly recurring and non-recurring charges below will apply and the Switch-As-Is Charge will not apply for UNE combinations provisioned as ' Ordinarily Combined' Network Elements.																
	NOTE: The monthly recurring and the Switch-As-Is Charge and not the non-recurring charges below will apply for UNE combinations provisioned as ' Currently Combined' Network Elements.																
	EXTENDED 4-WIRE DS1 DIGITAL EXTENDED LOOP WITH DEDICATED DS1 INTEROFFICE TRANSPORT																

UNBUNDLED NETWORK ELEMENTS - South Carolina														Attachment: 2 Exh. B			
CATEGORY		RATE ELEMENTS	Interim	Zone	BCS	USOC	RATES ($)					Svc Order Submitted Elec per LSR	Svc Order Submitted Manually per LSR	Incremental Charge - Manual Svc Order vs. Electronic-1st	Incremental Charge - Manual Svc Order vs. Electronic-Add'l	Incremental Charge - Manual Svc Order vs. Electronic-Disc 1st	Incremental Charge - Manual Svc Order vs. Electronic-Disc Add'l
							Rec	Nonrecurring		Nonrecurring Disconnect		OSS Rates ($)					
								First	Add'l	First	Add'l	SOMEC	SOMAN	SOMAN	SOMAN	SOMAN	SOMAN
		4-Wire DS1 Digital Loop in Combination - Zone 1		1	UNC1X	USLXX	104.50										
		4-Wire DS1 Digital Loop in Combination - Zone 2		2	UNC1X	USLXX	178.74										
		4-Wire DS1 Digital Loop in Combination - Zone 3		3	UNC1X	USLXX	301.17										
		Interoffice Transport - Dedicated - DS1 combination - Per Mile per month			UNC1X	1L5XX	0.31										
		Interoffice Transport - Dedicated - DS1 combination - Facility Termination per month			UNC1X	U1TF1	70.97										
	EXTENDED DS3 DIGITAL EXTENDED LOOP WITH DEDICATED DS3 INTEROFFICE TRANSPORT																
		DS3 Local Loop in combination - per mile per month			UNC3X	1L5ND	14.10										
		DS3 Local Loop in combination - Facility Termination per month			UNC3X	UE3PX	352.31										
		Interoffice Transport - Dedicated - DS3 - Per Mile per month			UNC3X	1L5XX	7.38										
		Interoffice Transport - Dedicated - DS3 combination - Facility Termination per month			UNC3X	U1TF3	810.20										
	EXTENDED STS-1 DIGITAL EXTENDED LOOP WITH DEDICATED STS-1 INTEROFFICE TRANSPORT																
		STS-1 Local Loop in combination - per mile per month			UNCSX	1L5ND	14.10										
		STS-1 Local Loop in combination - Facility Termination per month			UNCSX	UDLS1	360.51										
		Interoffice Transport - Dedicated - STS-1 combination - per mile per month			UNCSX	1L5XX	7.38										
		Interoffice Transport - Dedicated - STS-1 combination - Facility Termination per month			UNCSX	U1TFS	810.11										

UNBUNDLED NETWORK ELEMENTS - Tennessee														Attachment: 2 Exh. B			
CATEGORY	RATE ELEMENTS	Interim	Zone	BCS	USOC	RATES ($)					Svc Order Submitted Elec per LSR	Svc Order Submitted Manually per LSR	Incremental Charge - Manual Svc Order vs. Electronic-1st	Incremental Charge - Manual Svc Order vs. Electronic-Add'l	Incremental Charge - Manual Svc Order vs. Electronic-Disc 1st	Incremental Charge - Manual Svc Order vs. Electronic-Disc Add'l
						Rec	Nonrecurring		Nonrecurring Disconnect		OSS Rates ($)					
							First	Add'l	First	Add'l	SOMEC	SOMAN	SOMAN	SOMAN	SOMAN	SOMAN
UNBUNDLED EXCHANGE ACCESS LOOP																
2-WIRE HIGH BIT RATE DIGITAL SUBSCRIBER LINE (HDSL) COMPATIBLE LOOP																
	2 Wire Unbundled HDSL Loop including manual service inquiry & facility reservation - Zone 1		1	UHL	UHL2X	11.09										
	2 Wire Unbundled HDSL Loop including manual service inquiry & facility reservation - Zone 2		2	UHL	UHL2X	16.61										
	2 Wire Unbundled HDSL Loop including manual service inquiry & facility reservation - Zone 3		3	UHL	UHL2X	27.74										
	2 Wire Unbundled HDSL Loop without manual service inquiry and facility reservation - Zone 1		1	UHL	UHL2W	11.09										
	2 Wire Unbundled HDSL Loop without manual service inquiry and facility reservation - Zone 2		2	UHL	UHL2W	16.61										
	2 Wire Unbundled HDSL Loop without manual service inquiry and facility reservation - Zone 3		3	UHL	UHL2W	27.74										
4-WIRE HIGH BIT RATE DIGITAL SUBSCRIBER LINE (HDSL) COMPATIBLE LOOP																
	4 Wire Unbundled HDSL Loop including manual service inquiry and facility reservation - Zone 1		1	UHL	UHL4X	14.26										
	4-Wire Unbundled HDSL Loop including manual service inquiry and facility reservation - Zone 2		2	UHL	UHL4X	21.37										
	4-Wire Unbundled HDSL Loop including manual service inquiry and facility reservation - Zone 3		3	UHL	UHL4X	35.68										
	4-Wire Unbundled HDSL Loop without manual service inquiry and facility reservation - Zone 1		1	UHL	UHL4W	14.26										
	4-Wire Unbundled HDSL Loop without manual service inquiry and facility reservation - Zone 2		2	UHL	UHL4W	21.37										
	4-Wire Unbundled HDSL Loop without manual service inquiry and facility reservation - Zone 3		3	UHL	UHL4W	35.68										
4-WIRE DS1 DIGITAL LOOP																
	4-Wire DS1 Digital Loop - Zone 1		1	USL	USLXX	59.09										
	4-Wire DS1 Digital Loop - Zone 2		2	USL	USLXX	88.53										
	4-Wire DS1 Digital Loop - Zone 3		3	USL	USLXX	147.82										
HIGH CAPACITY UNBUNDLED LOCAL LOOP																
	High Capacity Unbundled Local Loop - DS3 - Per Mile per month			UE3	1L5ND	10.57										
	High Capacity Unbundled Local Loop - DS3 - Facility Termination per month			UE3	UE3PX	430.38										
	High Capacity Unbundled Local Loop - STS-1 - Per Mile per month			UDLSX	1L5ND	10.57										
	High Capacity Unbundled Local Loop - STS-1 - Facility Termination per month			UDLSX	UDLS1	447.75										
UNBUNDLED DEDICATED TRANSPORT																
INTEROFFICE CHANNEL - DEDICATED TRANSPORT																
	Interoffice Channel - Dedicated Channel - DS1 - Per Mile per month			U1TD1	1L5XX	0.40963										
	Interoffice Channel - Dedicated Tranport - DS1 - Facility Termination			U1TD1	U1TF1	89.54										
	Interoffice Channel - Dedicated Transport - DS3 - Per Mile per month			U1TD3	1L5XX	2.69										
	Interoffice Channel - Dedicated Transport - DS3 - Facility Termination per month			U1TD3	U1TF3	976.34										
	Interoffice Channel - Dedicated Transport - STS-1 - Per Mile per month			U1TS1	1L5XX	2.69										
	Interoffice Channel - Dedicated Transport - STS-1 - Facility Termination			U1TS1	U1TFS	976.70										
ENHANCED EXTENDED LINK (EELs) AND THEIR COMPONETS																
NOTE: The monthly recurring and non-recurring charges below will apply and the Switch-As-Is Charge will not apply for UNE combinations provisioned as ' Ordinarily Combined' Network Elements.																
NOTE: The monthly recurring and the Switch-As-Is Charge and not the non-recurring charges below will apply for UNE combinations provisioned as ' Currently Combined' Network Elements.																
EXTENDED 4-WIRE DS1 DIGITAL EXTENDED LOOP WITH DEDICATED DS1 INTEROFFICE TRANSPORT																

UNBUNDLED NETWORK ELEMENTS - Tennessee														Attachment: 2 Exh. B			
CATEGORY		RATE ELEMENTS	Interim	Zone	BCS	USOC	RATES ($)					Svc Order Submitted Elec per LSR	Svc Order Submitted Manually per LSR	Incremental Charge - Manual Svc Order vs. Electronic-1st	Incremental Charge - Manual Svc Order vs. Electronic-Add'l	Incremental Charge - Manual Svc Order vs. Electronic-Disc 1st	Incremental Charge - Manual Svc Order vs. Electronic-Disc Add'l
							Rec	Nonrecurring		Nonrecurring Disconnect		OSS Rates ($)					
								First	Add'l	First	Add'l	SOMEC	SOMAN	SOMAN	SOMAN	SOMAN	SOMAN
		4-Wire DS1 Digital Loop in Combination - Zone 1		1	UNC1X	USLXX	59.09										
		4-Wire DS1 Digital Loop in Combination - Zone 2		2	UNC1X	USLXX	88.53										
		4-Wire DS1 Digital Loop in Combination - Zone 3		3	UNC1X	USLXX	147.82										
		Interoffice Transport - Dedicated - DS1 combination - Per Mile per month			UNC1X	1L5XX	0.40963										
		Interoffice Transport - Dedicated - DS1 combination - Facility Termination per month			UNC1X	U1TF1	89.54										
	EXTENDED DS3 DIGITAL EXTENDED LOOP WITH DEDICATED DS3 INTEROFFICE TRANSPORT																
		DS3 Local Loop in combination - per mile per month			UNC3X	1L5ND	10.57										
		DS3 Local Loop in combination - Facility Termination per month			UNC3X	UE3PX	430.38										
		Interoffice Transport - Dedicated - DS3 - Per Mile per month			UNC3X	1L5XX	2.69										
		Interoffice Transport - Dedicated - DS3 combination - Facility Termination per month			UNC3X	U1TF3	983.22										
	EXTENDED STS-1 DIGITAL EXTENDED LOOP WITH DEDICATED STS-1 INTEROFFICE TRANSPORT																
		STS-1 Local Loop in combination - per mile per month			UNCSX	1L5ND	10.57										
		STS-1 Local Loop in combination - Facility Termination per month			UNCSX	UDLS1	447.75										
		Interoffice Transport - Dedicated - STS-1 combination - per mile per month			UNCSX	1L5XX	2.69										
		Interoffice Transport - Dedicated - STS-1 combination - Facility Termination per month			UNCSX	U1TFS	976.70										

				December 2004 Data with FBC count as of Dec 5			
				Interoffice Transport		High Capacity Loops	
State	Wire Center	Total Business Lines	Number of FB Collocators if 3 or Greater	Tier 1	Tier 2	No Impairment for DS3	No Impairment for DS1
AL	BRHMALMT	39,078	-	X			
AL	HNVIALMT	26,690	-		X		
AL	MOBLALAZ	20,101	5	X			
AL	MTGMALDA	32,752	-		X		
AL	MTGMALMT	27,528	-		X		
FL	BCRTFLBT	26,601	-		X		
FL	BCRTFLMA	40,746	5	X		X	
FL	COCOFLMA	18,097	4	X			
FL	DRBHFLMA	24,695	1		X		
FL	DYBHFLMA	32,282	7	X			
FL	FTLDFLCY	31,487	4	X			
FL	FTLDFLJA	29,209	5	X			
FL	FTLDFLMR	55,881	8	X		X	
FL	FTLDFLOA	23,008	5	X			
FL	FTLDFLPL	29,469	5	X			
FL	GSVLFLMA	55,681	4	X		X	
FL	HLWDFLPE	37,415	4	X			
FL	HLWDFLWH	34,022	-		X		
FL	JCVLFLCL	42,452	6	X		X	
FL	JCVLFLSJ	24,088	3		X		
FL	JCVLFLSM	17,820	5	X			
FL	MIAMFLAE	41,912	5	X		X	
FL	MIAMFLBR	24,482	-		X		
FL	MIAMFLCA	22,645	3		X		
FL	MIAMFLGR	68,580	11	X		X	X
FL	MIAMFLHL	43,021	5	X		X	
FL	MIAMFLPB	24,380	4	X			
FL	MIAMFLPL	86,923	5	X		X	X
FL	MIAMFLRR	24,740	3		X		
FL	MIAMFLSO	23,802	3		X		
FL	MIAMFLWM	23,310	4	X			
FL	MLBRFLMA	32,547	4	X			
FL	MNDRFLLO	20,180	3		X		
FL	NDADFLGG	18,239	5	X			
FL	ORLDFLAP	31,234	3		X		
FL	ORLDFLCL	20,828	5	X			
FL	ORLDFLMA	57,966	10	X		X	
FL	ORLDFLPC	45,792	6	X		X	
FL	ORLDFLPH	33,148	4	X			

FL	ORLDFLSA	26,126	8	X			
FL	PMBHFLFE	25,909	4	X			
FL	PMBHFLMA	33,993	4	X			
FL	PNSCFLBL	28,685	4	X			
FL	PNSCFLFP	30,863	-		X		
FL	PRRNFLMA	37,969	3		X		
FL	STRTFLMA	25,577	-		X		
FL	WPBHFLAN	33,521	4	X			
FL	WPBHFLGA	24,885	-		X		
FL	WPBHFLGR	26,527	3		X		
FL	WPBHFLHH	36,053	3		X		
FL	WPBHFLLE	13,622	3		X		
GA	AGSTGAMT	22,316	3		X		
GA	ALBYGAMA	29,095	-		X		
GA	ALPRGAMA	74,317	7	X		X	X
GA	ATHNGAMA	28,311	-		X		
GA	ATLNGABU	57,064	7	X		X	
GA	ATLNGACS	94,988	9	X		X	X
GA	ATLNGAEP	34,260	4	X			
GA	ATLNGAPP	71,905	7	X		X	X
GA	ATLNGASS	33,797	3		X		
GA	ATLNGATH	33,131	3		X		
GA	CHMBGAMA	30,860	-		X		
GA	CLMBGAMT	36,081	-		X		
GA	CMNGGAMA	24,408	-		X		
GA	DLTHGAHS	39,907	-	X			
GA	DNWDGAMA	47,862	7	X		X	
GA	LLBNGAMA	27,481	-		X		
GA	LRVLGAOS	32,076	-		X		
GA	MACNGAMT	24,148	-		X		
GA	MRTTGAMA	89,220	4	X		X	X
GA	NRCRGAMA	78,131	8	X		X	X
GA	RSWLGAMA	41,390	3	X			
GA	SMYRGAMA	29,316	5	X			
GA	SMYRGAPF	52,246	8	X		X	
GA	SVNHGABS	28,626	3		X		
GA	TUKRGAMA	27,383	-		X		
KY	LSVLKYAP	49,159	4	X		X	
KY	LSVLKYBR	16,989	3		X		
LA	BTRGLAGW	39,525	-	X			
LA	BTRGLAMA	39,089	4	X		X	
LA	LFYTLAMA	46,825	-	X			
LA	MONRLAMA	37,785	-		X		

LA	NWORLAMA	71,146	6	X		X	X
LA	NWORLAMT	31,726	-		X		
LA	SHPTLAMA	29,790	3		X		
MS	HTBGMSMA	12,829	3		X		
MS	JCSNMSCP	40,109	3	X			
NC	CARYNCCE	27,888	4	X			
NC	CHRLNCBO	24,980	8	X			
NC	CHRLNCCA	85,131	9	X		X	X
NC	CHRLNCDE	17,354	3		X		
NC	CHRLNCLP	9,811	4	X			
NC	CHRLNCRE	11,507	6	X			
NC	CHRLNCSH	13,484	5	X			
NC	CHRLNCUN	14,570	4	X			
NC	CPHLNCRO	41,802	4	X		X	
NC	GNBONCAS	34,302	6	X			
NC	GNBONCEU	48,789	6	X		X	
NC	RLGHNCGL	26,809	5	X			
NC	RLGHNCHO	29,561	8	X			
NC	RLGHNCMO	75,174	7	X		X	X
NC	SLBRNCMA	11,462	3		X		
NC	WLMGNCWI	24,794	-		X		
NC	WNSLNCFI	33,021	3		X		
SC	CHTNSCDT	24,703	5	X			
SC	CHTNSCNO	24,107	-		X		
SC	CLMASCSA	13,939	3		X		
SC	CLMASCSN	48,403	5	X		X	
SC	GNVLSCDT	45,546	5	X		X	
SC	GNVLSCWR	33,639	-		X		
SC	MNPLSCES	24,061	-		X		
SC	SPBGSCMA	22,796	3		X		
TN	CHTGTNBR	24,314	-		X		
TN	CHTGTNNS	23,166	3		X		
TN	KNVLTNMA	37,284	3		X		
TN	MMPHTNBA	34,364	-		X		
TN	MMPHTNEL	30,973	3		X		
TN	MMPHTNGT	26,311	-		X		
TN	MMPHTNMA	23,520	6	X			
TN	MMPHTNMT	10,289	3		X		
TN	MMPHTNOA	36,686	2		X		
TN	NSVLTNBW	28,974	-		X		
TN	NSVLTNDO	24,914	-		X		
TN	NSVLTNMT	78,781	3	X			
TN	NSVLTNST	24,911	-		X		

TN	NSVLTNUN	19,987	3		X		
Totals				**67**	**59**	**27**	**10**

Attachment 3

Network Interconnection

TABLE OF CONTENTS

1 General 3

2 Definitions: (For the purpose of this Attachment) 3

3 Network Interconnection 5

4 Interconnection Trunk Group Architectures 7

5 Network Design And Management For Interconnection 14

6 Forecasting for Trunk Provisioning 14

7 Local Dialing Parity 17

8 Interconnection Compensation 17

9 Ordering Charges 22

10 Basic 911 and E911 Interconnection 23

11 SS7 Network Interconnection 24

Rates **Exhibit A**
Basic Architecture **Exhibit B**
One Way Architecture **Exhibit C**
Two Way Architecture **Exhibit D**
Supergroup Architecture **Exhibit E**

NETWORK INTERCONNECTION

1 General

1.1 The Parties shall provide interconnection with each other's networks for the transmission and routing of telephone exchange service (Local Traffic), ISP-Bound Traffic, and exchange access (Switched Access Traffic) on the following terms:

2 Definitions: (For the purpose of this Attachment)

For purposes of this attachment only, the following terms shall have the definitions set forth below:

2.1 **Automatic Location Identification (ALI)** is a feature by which the address associated with the calling party's telephone number (ANI) is forwarded to the PSAP for display. Access to the ALI database is described in Attachment 2 to this Agreement.

2.2 **Automatic Number Identification (ANI)** corresponds to the seven-digit telephone number assigned by the serving local exchange carrier.

2.3 **BellSouth Trunk Group** is defined as a one-way trunk group carrying BellSouth originated traffic to be terminated by Access Point.

2.4 **911 Service** is as described in this Attachment.

2.5 **Call Termination** has the meaning set forth for "termination" in 47 C.F.R. § 51.701(d).

2.6 **Call Transport** has the meaning set forth for "transport" in 47 C.F.R. § 51.701(c).

2.7 **Call Transport and Termination** is used collectively to mean the switching and transport functions from the Interconnection Point to the last point of switching.

2.8 **Common (Shared) Transport** is defined as the transport of the originating Party's traffic by the terminating Party over the terminating Party's common (shared) facilities between (1) the terminating Party's tandem switch and end office switch, (2) between the terminating Party's tandem switches, and/or (3) between the terminating Party's host and remote end office switches. All switches referred herein must be entered into the The Telcordia® LERG™ Routing Guide (LERG).

2.9 **Dedicated Interoffice Facility** is defined as a switch transport facility between a Party's Serving Wire Center and the first point of switching within the LATA on the other Party's network.

2.10 **End Office Switching** is defined as the function that establishes a communications path between the trunk side and line side of the End Office switch.

2.11 **Fiber Meet** is an interconnection arrangement whereby the Parties physically interconnect their networks via an optical fiber interface at which one Party's facilities, provisioning, and maintenance responsibility begins and the other Party's responsibility ends.

2.12 **Final Trunk Group** is defined as the last choice trunk group between two (2) switches for which there is no alternate route.

2.13 **Integrated Services Digital Network User Part (ISUP)** is a message protocol to support call set-up and release for interoffice voice connections over SS7 signaling.

2.14 **Interconnection Point (IP)** is the physical telecommunications equipment interface that interconnects the networks of BellSouth and Access Point.

2.15 **IntraLATA Toll Traffic** is as defined in this Attachment.

2.16 **ISP-Bound Traffic** is as defined in this Attachment.

2.17 **Local Channel** is defined as a switched transport facility between a Party's Interconnection Point and the IP's Serving Wire Center.

2.18 **Local Traffic** is as defined in this Attachment.

2.19 **Public Safety Answering Point (PSAP)** is the answering location for 911 calls.

2.20 **Selective Routing (SR)** is a standard feature that routes an E911 call from the tandem to the designated PSAP based upon the address of the ANI of the calling party.

2.21 **Serving Wire Center (SWC)** is defined as the wire center owned by one Party from which the other Party would normally obtain dial tone for its IP.

2.22 **Signaling System 7 (SS7)/Common Channel Signaling 7 (CCS7)** is an out-of-band signaling system used to provide basic routing information, call set-up and other call termination functions. Signaling is removed from the voice channel and put on a separate data network.

2.23 **Tandem Switching** is defined as the function that establishes a communications path between two switching offices through a third switching office through the provision of trunk side to trunk side switching.

2.24 **Transit Traffic** is traffic originating on Access Point's network that is switched and/or transported by BellSouth and delivered to a third party's network, or traffic originating on a third party's network that is switched and/or transported by BellSouth and delivered to Access Point's network.

3 Network Interconnection

3.1 This Attachment pertains only to the provision of network interconnection where Access Point owns, leases from a third party or otherwise provides its own switch(es).

3.2 Network interconnection may be provided by the Parties at any technically feasible point within BellSouth's network. Requests to BellSouth for interconnection at points other than as set forth in this Attachment may be made through the Bona Fide Request/New Business Request (BFR/NBR) Process set forth in Attachment 11.

3.2.1 Each Party is responsible for providing, engineering and maintaining the network on its side of the IP. The IP must be located within BellSouth's serving territory in the LATA in which traffic is originating. The IP determines the point at which the originating Party shall pay the terminating Party for the Call Transport and Termination of Local Traffic, ISP-Bound Traffic and IntraLATA Toll Traffic. In selecting the IP, both Parties will act in good faith and select the point that is most efficient for both Parties.

3.2.2 Pursuant to the provisions of this Attachment, the location of the initial IP in a given LATA shall be established by mutual agreement of the Parties. Subject to the requirements for installing additional IPs, as set forth below, any IPs existing prior to the Effective Date of the Agreement will be accepted as initial IPs and will not require re-grooming. When the Parties mutually agree to utilize two-way interconnection trunk groups for the exchange of Local Traffic, ISP-Bound Traffic and IntraLATA Toll Traffic between each other, the Parties shall mutually agree to the location of IP(s). If the Parties are unable to agree to a mutual initial IP, each Party, as originating Party, shall establish a single IP in the LATA for the delivery of its originated Local Traffic, ISP-Bound Traffic and IntraLATA Toll Traffic to the other Party for Call Transport and Termination by the terminating Party.

3.2.3 Additional IP(s) in a LATA may be established by mutual agreement of the Parties. Notwithstanding the foregoing, additional IP(s) in a particular LATA shall be established, at the request of either Party, when the Local Traffic and ISP-Bound Traffic exceeds eight point nine (8.9) million minutes per month for three (3) consecutive months at the proposed location of the additional IP. BellSouth will not request the establishment of an IP in a BellSouth Central Office where physical or virtual collocation space is not available or where BellSouth fiber connectivity is not available. When the Parties agree to utilize two-way interconnection trunk groups for the exchange of Local Traffic, ISP-Bound Traffic and IntraLATA Toll Traffic the Parties must agree to the location of the IP(s).

3.3 <u>Interconnection via Dedicated Facilities</u>

3.3.1 Local Channel Facilities. As part of Call Transport and Termination, the originating Party may obtain Local Channel facilities from the terminating Party. The percentage of Local Channel facilities utilized for Local Traffic and ISP-Bound Traffic shall be determined based upon the application of the Percent Local Facility (PLF) Factor as set forth in this Attachment. The charges applied to the percentage of Local Channel facilities used for Local Traffic and ISP-Bound Traffic as determined by the PLF factor are as set forth in Exhibit A. The remaining percentage of Local Channel facilities shall be billed at BellSouth's intrastate Access Services Tariff or BellSouth's FCC No. 1 Tariff rates.

3.3.2 Dedicated Interoffice Facilities. As a part of Call Transport and Termination, the originating Party may obtain Dedicated Interoffice Facilities from the terminating Party. The percentage of Dedicated Interoffice Facilities utilized for Local Traffic and ISP-Bound Traffic shall be determined based upon the application of the PLF factor as set forth in this Attachment. The charges applied to the percentage of the Dedicated Interoffice Facilities used for Local Traffic and ISP-Bound Traffic as determined by the PLF factor are as set forth in Exhibit A. The remaining percentage of the Dedicated Interoffice Facilities shall be billed at BellSouth's intrastate Access Services Tariff or BellSouth's FCC No. 1 Tariff rates.

3.4 Fiber Meet. Notwithstanding Sections 3.2.1, 3.2.2, and 3.2.3 above, if Access Point elects to establish interconnection with BellSouth pursuant to a Fiber Meet Local Channel, Access Point and BellSouth shall jointly engineer, operate and maintain a Synchronous Optical Network (SONET) transmission system by which they shall interconnect their transmission and routing of Local Traffic and ISP-Bound Traffic via a Local Channel at either the DS1 or DS3 level. The Parties shall work jointly to determine the specific transmission system. However, Access Point's SONET transmission system must be compatible with BellSouth's equipment, and the Data Communications Channel (DCC) must be turned off.

3.4.1 Each Party, at its own expense, shall procure, install and maintain the agreed upon SONET transmission system in its network.

3.4.2 The Parties shall agree to a Fiber Meet point between the BellSouth Serving Wire Center and the Access Point Serving Wire Center. The Parties shall deliver their fiber optic facilities to the Fiber Meet point with sufficient spare length to reach the fusion splice point for the Fiber Meet point. BellSouth shall, at its own expense, provide and maintain the fusion splice point for the Fiber Meet. A building type CLLI code will be established for each Fiber Meet point. All orders for interconnection facilities from the Fiber Meet point shall indicate the Fiber Meet point as the originating point for the facility.

3.4.3 Upon verbal request by Access Point, BellSouth shall allow Access Point access to the fusion splice point for the Fiber Meet point for maintenance purposes on Access Point's side of the Fiber Meet point.

3.4.4 Neither Party shall charge the other for its Local Channel portion of the Fiber Meet facility used exclusively for Local Traffic and ISP-Bound Traffic. The percentage of Local Channel facilities utilized for Local Traffic and ISP-Bound Traffic shall be determined based upon the application of the PLF factor as set forth in this Attachment. The charges applied to the percentage of Local Channel facilities used for Local Traffic and ISP-Bound Traffic as determined by the PLF factor are as set forth in Exhibit A. The remaining percentage of Local Channel facilities shall be billed at BellSouth's applicable access tariff rates. Charges for switched and special access services shall be billed in accordance with the applicable BellSouth intrastate Access Services Tariff and or BellSouth's FCC No. 1 Tariff.

4 Interconnection Trunk Group Architectures

4.1 BellSouth and Access Point shall establish interconnecting trunk groups and trunk group configurations between networks, including the use of one-way or two-way trunks in accordance with the following provisions set forth in this Attachment**.** For trunking purposes, traffic will be routed based on the digits dialed by the originating end user and in accordance with the LERG.

4.2 Access Point shall establish an interconnection trunk group(s) to at least one (1) BellSouth access tandem within the LATA for the delivery of Access Point's originated Local Traffic, ISP-Bound Traffic and IntraLATA Toll Traffic and for the receipt and delivery of Transit Traffic. To the extent Access Point desires to deliver Local Traffic, ISP-Bound Traffic, IntraLATA Toll Traffic and/or Transit Traffic to BellSouth access tandems within the LATA, other than the tandems(s) to which Access Point has established interconnection trunk groups, Access Point shall pay the appropriate rates for Multiple Tandem Access, as described in this Attachment.

4.2.1 Notwithstanding the forgoing, Access Point shall establish an interconnection trunk group(s) to all BellSouth access and local tandems in the LATA where Access Point has homed (i.e., assigned) its NPA/NXXs. Access Point shall home its NPA/NXXs on the BellSouth tandems that serve the exchange rate center areas to which the NPA/NXXs are assigned. The specified exchange rate center assigned to each BellSouth tandem is defined in the LERG. Access Point shall enter its NPA/NXX access and/or local tandem homing arrangements into the LERG.

4.3 Switched access traffic will be delivered to and from IXCs based on Access Point's NXX access tandem homing arrangement as specified by Access Point in the LERG.

4.4 Any Access Point interconnection request that (1) deviates from the interconnection trunk group architectures as described in this Agreement, (2) affects traffic delivered to Access Point from a BellSouth switch, and (3) requires

special BellSouth switch translations and other network modifications will require Access Point to submit a BFR/NBR via the BFR/NBR Process as set forth in Attachment 11.

4.5 Recurring and nonrecurring rates associated with interconnecting trunk groups between BellSouth and Access Point are set forth in Exhibit A. To the extent a rate associated with the interconnecting trunk group is not set forth in Exhibit A, the rate shall be as set forth in the appropriate BellSouth intrastate Access Services Tariff or BellSouth's FCC No. 1 Tariff.

4.6 For two-way trunk groups that carry only both Parties' Local Traffic, the Parties shall be compensated at fifty percent (50%) of the nonrecurring and recurring rates for dedicated trunks and DS1 facilities. Access Point shall be responsible for ordering and paying for any two-way trunks carrying Transit Traffic.

4.7 All trunk groups will be provisioned as SS7 capable where technically feasible. If SS7 is not technically feasible, multi-frequency (MF) protocol signaling shall be used.

4.8 In cases where Access Point is also an IXC, the IXC's Feature Group D (FG D) trunk group(s) must remain separate from the local interconnection trunk group(s).

4.9 Each Party shall order interconnection trunks and trunk group including trunk and trunk group augmentations via the Access Service Request (ASR) process. A Firm Order Confirmation (FOC) shall be returned to the ordering Party, after receipt of a valid, error free ASR, within the timeframes set forth in each state's applicable Performance Measures. Notwithstanding the foregoing, blocking situations and projects shall be managed through BellSouth's Carrier Interconnection Switching Center (CISC) Project Management Group and Access Point's equivalent trunking group, and FOCs for such orders shall be returned in the timeframes applicable to the project. A project is defined as (1) a new trunk group or (2) a request for more than one hundred ninety-two (192) trunks on a single or multiple group(s) in a given BellSouth local calling area.

4.10 <u>Interconnection Trunk Groups for Exchange of Local Traffic and Transit Traffic</u>

4.10.1 Upon mutual agreement of the Parties in a joint planning meeting, the Parties shall exchange Local Traffic on two-way interconnection trunk group(s) with the quantity of trunks being mutually determined and the provisioning being jointly coordinated. Furthermore, the Parties shall agree upon the IP(s) for two-way interconnection trunk groups transporting both Parties' Local Traffic, ISP-Bound Traffic and IntraLATA Toll Traffic. Access Point shall order such two-way trunks via the ASR process. BellSouth will use the Trunk Group Service Request (TGSR) to request changes in trunking. Furthermore, the Parties shall jointly review trunk performance and forecasts in accordance with Section 6 below. The Parties' use of two-way interconnection trunk groups for the transport of Local

Traffic, ISP-Bound Traffic and IntraLATA Toll Traffic between the Parties does not preclude either Party from establishing additional one-way interconnection trunks for the delivery of its originated Local Traffic, ISP-Bound Traffic and IntraLATA Toll Traffic to the other Party. Other trunk groups for operator services, directory assistance and intercept must be established pursuant to BellSouth's intrastate Access Services Tariff and/or BellSouth's FCC No. 1 Tariff.

4.10.2 BellSouth Access Tandem Interconnection. BellSouth Access Tandem interconnection at a single Access Tandem provides access to those End Offices subtending that access tandem (Intratandem Access). Access Tandem interconnection is available for any of the following access tandem architectures:

4.10.2.1 Basic Architecture. In the basic architecture, Access Point's originating Local Traffic, ISP-Bound Traffic and IntraLATA Toll Traffic and originating and terminating Transit Traffic is transported on a single two-way trunk group between Access Point and BellSouth Access Tandem(s) within a LATA to provide Intratandem Access. This trunk group carries Transit Traffic between Access Point and ICOs, IXCs, other CLECs, CMRS providers that have a Meet Point Billing arrangement with BellSouth, and other network providers with which Access Point desires to exchange traffic. This trunk group also carries Access Point originated Transit Traffic transiting a single BellSouth Access Tandem destined to third party tandems such as an ICO tandem or other CLEC tandem. BellSouth originated Local Traffic, ISP-Bound Traffic and IntraLATA Toll Traffic is transported on a separate single one-way trunk group terminating to Access Point. The LERG contains current routing and tandem serving arrangements. The basic Architecture is illustrated in Exhibit B.

4.10.2.2 One-Way Trunk Group Architecture. In one-way trunk group architecture, the Parties interconnect using three (3) separate trunk groups. A one-way trunk group provides Intratandem Access for Access Point-originated Local Traffic, ISP-Bound Traffic and IntraLATA Toll Traffic destined for BellSouth end users. A second one-way trunk group carries BellSouth-originated Local Traffic, ISP-Bound Traffic and IntraLATA Toll Traffic destined for Access Point end users. A two-way trunk group provides Intratandem Access for Access Point's originating and terminating Transit Traffic. This trunk group carries Transit Traffic between Access Point and ICOs, IXCs, other CLECs, CMRS providers that have a Meet Point Billing arrangement with BellSouth, and other network providers with which Access Point exchanges traffic. This trunk group also carries Access Point originated Transit Traffic transiting a single BellSouth Access Tandem destined to third party tandems such as an ICO tandem or other CLEC tandem. BellSouth originated Local Traffic, ISP-Bound Traffic and IntraLATA Toll Traffic is transported on a separate single one-way trunk group terminating to Access Point. The LERG contains current routing and tandem serving arrangements. The one-way trunk group architecture is illustrated in Exhibit C.

4.10.2.3 Two-Way Trunk Group Architecture. The two-way trunk group Architecture establishes one (1) two-way trunk group to provide Intratandem Access for the exchange of Local Traffic, ISP-Bound Traffic and IntraLATA Toll Traffic between Access Point and BellSouth. In addition, a separate two-way transit trunk group must be established for Access Point's originating and terminating Transit Traffic. This trunk group carries Transit Traffic between Access Point and ICOs, IXCs, other CLECs, CMRS providers that have a Meet Point Billing arrangement with BellSouth, and other network providers with which Access Point exchanges traffic. This trunk group also carries Access Point originated Transit Traffic transiting a single BellSouth Access Tandem destined to third party tandems such as an ICO tandem or other CLEC tandem. BellSouth originated traffic may, in order to prevent or remedy traffic blocking situations, be transported on a separate single one-way trunk group terminating to Access Point. However, where Access Point is responsive in a timely manner to BellSouth's transport needs for its originated traffic, BellSouth originating traffic will be placed on the two-way Local Traffic trunk group carrying ISP-Bound Traffic and IntraLATA Toll Traffic. The LERG contains current routing and tandem serving arrangements. The two-way trunk group architecture is illustrated in Exhibit D.

4.10.2.4 Supergroup Architecture. In the supergroup architecture, the Parties' Local Traffic, ISP-Bound Traffic and IntraLATA Toll Traffic and Access Point's Transit Traffic are exchanged on a single two-way trunk group between Access Point and BellSouth to provide Intratandem Access to Access Point. This trunk group carries Transit Traffic between Access Point and ICOs, IXCs, other CLECs, CMRS providers that have a Meet Point Billing arrangement with BellSouth, and other network providers with which Access Point desires to exchange traffic. This trunk group also carries Access Point originated Transit Traffic transiting a single BellSouth Access Tandem destined to third party tandems such as an ICO tandem or other CLEC tandem. BellSouth originated traffic may, in order to prevent or remedy traffic blocking situations, be transported on a separate single one-way trunk group terminating to Access Point. However, where Access Point is responsive in a timely manner to BellSouth's transport needs for its originated traffic, BellSouth originating traffic will be placed on the Supergroup. Other trunk groups for operator services, directory assistance, emergency services and intercept must be established pursuant to the applicable BellSouth tariff if service is requested. The LERG contains current routing and tandem serving arrangements. The supergroup architecture is illustrated in Exhibit E.

4.10.2.5 Multiple Tandem Access (MTA) Interconnection

4.10.2.5.1 Where Access Point does not choose access tandem interconnection at every BellSouth Access Tandem within a LATA, Access Point must utilize BellSouth's MTA interconnection. To utilize MTA Access Point must establish an interconnection trunk group(s) at a minimum of one (1) BellSouth Access Tandem within each LATA as required. BellSouth will route Access Point's originated

Local Traffic, ISP-Bound Traffic and IntraLATA Toll Traffic for LATA wide transport and termination. Access Point must also establish an interconnection trunk group(s) at all BellSouth Access Tandems where Access Point NXXs are homed as described in Section 4.2.1 above. If Access Point does not have NXXs homed at any particular BellSouth Access Tandem within a LATA and elects not to establish an interconnection trunk group(s) at such BellSouth Access Tandem, Access Point can order MTA in each BellSouth Access Tandem within the LATA where it does have an interconnection trunk group(s) and BellSouth will terminate Access Point's Local Traffic, ISP-Bound Traffic and IntraLATA Toll Traffic to end users served through those BellSouth Access Tandems where Access Point does not have an interconnection trunk group(s). MTA shall be provisioned in accordance with BellSouth's Ordering Guidelines.

4.10.2.5.2 Access Point may also utilize MTA to route its originated Transit Traffic; provided, however, that MTA may not be utilized to route switched access traffic that transits the BellSouth network to an IXC. Switched access traffic originated by or terminated to Access Point will be delivered to and from IXCs based on Access Point's NXX access tandem homing arrangement as specified by Access Point in the LERG.

4.10.2.5.3 Compensation for MTA shall be at the applicable tandem switching and transport charges specified in Exhibit A and shall be billed in addition to any Call Transport and Termination charges.

4.10.2.5.4 To the extent Access Point does not purchase MTA in a LATA served by multiple Access Tandems, Access Point must establish an interconnection trunk group(s) to every Access Tandem in the LATA to serve the entire LATA. To the extent Access Point routes its traffic in such a way that utilizes BellSouth's MTA service without properly ordering MTA, Access Point shall pay BellSouth the associated MTA charges.

4.10.3 <u>Local Tandem Interconnection</u>

4.10.3.1 Local Tandem Interconnection arrangement allows Access Point to establish an interconnection trunk group(s) at BellSouth local tandems for: (1) the delivery of Access Point-originated Local Traffic and ISP-Bound Traffic transported and terminated by BellSouth to BellSouth End Offices served by those BellSouth local tandems, and (2) for local Transit Traffic transported by BellSouth for third party network providers who have also established an interconnection trunk group(s) at those BellSouth local tandems.

4.10.3.2 When a specified local calling area is served by more than one (1) BellSouth local tandem, Access Point must designate a "home" local tandem for each of its assigned NPA/NXXs and establish trunk connections to such local tandems. Additionally, Access Point may choose to establish an interconnection trunk

group(s) at the BellSouth local tandems where it has no codes homing but is not required to do so. Access Point may deliver Local Traffic and ISP-Bound Traffic to a "home" BellSouth local tandem that is destined for other BellSouth or third party network provider end offices subtending other BellSouth local tandems in the same local calling area where Access Point does not choose to establish an interconnection trunk group(s). It is Access Point's responsibility to enter its own NPA/NXX local tandem homing arrangements into the LERG either directly or via a vendor in order for other third party network providers to determine appropriate traffic routing to Access Point's codes. Likewise, Access Point shall obtain its routing information from the LERG.

4.10.3.3 Notwithstanding establishing an interconnection trunk group(s) to BellSouth's local tandems, Access Point must also establish an interconnection trunk group(s) to BellSouth Access Tandems within the LATA on which Access Point has NPA/NXXs homed for the delivery of Interexchange Carrier Switched Access and toll traffic, and traffic to Type 2A CMRS connections located at the Access Tandems. BellSouth shall not switch SWA traffic through more than one BellSouth access tandem. SWA, Type 2A CMRS or toll traffic routed to the local tandem in error will not be backhauled to the BellSouth Access Tandem for completion. (Type 2A CMRS interconnection is defined in Section A35 of BellSouth's GSST).

4.10.3.4 BellSouth's provisioning of Local Tandem Interconnection assumes that Access Point has executed the necessary local interconnection agreements with the other third party network providers subtending those local tandems as required by the Act.

4.10.4 <u>Direct End Office-to-End Office Interconnection</u>

4.10.4.1 Direct End Office-to-End Office one-way or two-way interconnection trunk groups allow for the delivery of a Party's originating Local Traffic, ISP-Bound Traffic and IntraLATA Toll Traffic to the terminating Party on a direct end office-to-end office basis.

4.10.4.2 The Parties shall utilize direct end office-to-end office trunk groups under any one (1) of the following conditions:

4.10.4.2.1 <u>Tandem Exhaust.</u> If a tandem through which the Parties are interconnected is unable to, or is forecasted to be unable to support additional traffic loads for any period of time, the Parties will mutually agree on an end office trunking plan that will alleviate the tandem capacity shortage and ensure completion of traffic between Access Point and BellSouth.

4.10.4.2.2 <u>Traffic Volume.</u> To the extent either Party has the capability to measure the amount of traffic between Access Point's switch and a BellSouth End Office and where such traffic exceeds or is forecasted to exceed a single DS1 of traffic per

month, then the Parties shall install and retain direct end office trunking sufficient to handle such traffic volumes. Either Party will install additional capacity between such points when overflow traffic exceeds or is forecasted to exceed a single DS1 of traffic per month. In the case of one-way trunking, additional trunking shall only be required by the Party whose trunking has achieved the preceding usage threshold.

4.10.4.2.3 Mutual Agreement. The Parties may install direct end office trunking upon mutual agreement in the absence of conditions (1) or (2) above.

4.10.5 Transit Traffic Trunk Group

4.10.5.1 Transit Traffic trunks can either be two-way trunks or two (2) one-way trunks ordered by Access Point to deliver and receive Transit Traffic. Establishing Transit Traffic trunks at BellSouth Access and Local Tandems provides Intratandem Access to the third parties also interconnected at those tandems. Access Point shall be responsible for all recurring and nonrecurring charges associated with Transit Traffic trunks and facilities.

4.10.5.2 Toll Free Traffic

4.10.5.2.1 If Access Point chooses BellSouth to perform the Service Switching Point (SSP) Function (i.e., handle Toll Free database queries) from BellSouth's switches, all Access Point originating Toll Free traffic will be routed over the Transit Traffic Trunk Group and shall be delivered using GR-394 format. Carrier Code "0110" and Circuit Code (to be determined for each LATA) shall be used for all such calls.

4.10.5.2.2 Access Point may choose to perform its own Toll Free database queries from its switch. In such cases, Access Point will determine the nature (local/intraLATA/interLATA) of the Toll Free call (local/IntraLATA/InterLATA) based on the response from the database. If the call is a BellSouth local or intraLATA Toll Free call, Access Point will route the post-query local or IntraLATA converted ten (10)-digit local number to BellSouth over the local or intraLATA trunk group. If the call is a third party (ICO, IXC, CMRS or other CLEC) local or intraLATA Toll Free call, Access Point will route the post-query local or intraLATA converted ten (10)-digit local number to BellSouth over the Transit Traffic Trunk Group and Access Point shall provide to BellSouth a Toll Free billing record when appropriate. If the query reveals the call is an interLATA Toll Free call, Access Point will route the post-query interLATA Toll Free call (1) directly from its switch for carriers interconnected with its network or (2) over the Transit Traffic Trunk Group to carriers that are not directly connected to Access Point's network but that are connected to BellSouth's Access Tandem.

4.10.5.2.3 All post-query Toll Free calls for which Access Point performs the SSP function, if delivered to BellSouth, shall be delivered using GR-394 format for calls destined

to IXCs, and GR-317 format for calls destined to end offices that directly subtend a BellSouth Access Tandem within the LATA.

5 Network Design And Management For Interconnection

5.1 Network Management and Changes. The Parties will exchange toll-free maintenance contact numbers and escalation procedures. The Parties will provide public notice of network changes in accordance with applicable federal and state rules and regulations.

5.2 Interconnection Technical Standards. The interconnection of all networks will be based upon accepted industry/national guidelines for transmission standards and traffic blocking criteria. Interconnecting facilities shall conform, at a minimum, to the telecommunications industry standard of DS1 pursuant to Telcordia Standard No. GR-NWT-00499. Where Access Point chooses to utilize SS7 signaling, also known as CCS7, SS7 connectivity is required between the Access Point switch and the BellSouth STP. BellSouth will provide SS7 signaling using Common Channel Signaling Access Capability in accordance with the technical specifications set forth in the BellSouth Guidelines to Technical Publication, GR-905-Core. Facilities of each Party shall provide the necessary on-hook, off-hook answer and disconnect supervision and shall provide calling number ID (Calling Party Number) when technically feasible.

5.3 Network Management Controls. Both Parties will work cooperatively to apply sound network management principles by invoking appropriate network management controls (e.g., call gapping) to alleviate or prevent network congestion.

6 Forecasting for Trunk Provisioning

6.1 Within six (6) months after execution of this Agreement, Access Point shall provide an initial interconnection trunk group forecast for each LATA in which it plans to provide service within BellSouth's region. Upon receipt of Access Point's forecast, the Parties shall conduct a joint planning meeting to develop a joint interconnection trunk group forecast. Each forecast provided under this Section shall be deemed Confidential Information under the General Terms and Conditions.

6.1.1 At a minimum, the forecast shall include the projected quantity of Transit Trunks, Access Point-to-BellSouth one-way trunks (Access Point Trunks), BellSouth-to-Access Point one-way trunks (BellSouth Trunk Groups) and/or two-way interconnection trunks, if the Parties have agreed to interconnect using two-way trunking to transport the Parties' Local Traffic, ISP-Bound Traffic and IntraLATA Toll Traffic. The quantities shall be projected for a minimum of six (6) months and shall include an estimate of the current year plus the next two (2) years total forecasted quantities. The Parties shall mutually develop BellSouth Trunk Groups and/or two-way interconnection trunk forecast quantities.

6.1.2 All forecasts shall include, at a minimum, Access Carrier Terminal Location (ACTL), trunk group type (e.g., local/intraLATA toll, Transit, Operator Services, 911, etc.), A location/Z location (CLLI codes for Access Point location and BellSouth location where the trunks shall terminate), interface type (e.g., DS1), Direction of Signaling, Trunk Group Number, if known, (commonly referred to as the 2-6 code) and forecasted trunks in service each year (cumulative).

6.2 Once initial interconnection trunk forecasts have been developed, Access Point shall continue to provide interconnection trunk forecasts at mutually agreeable intervals. Access Point shall use its best efforts to make the forecasts as accurate as possible based on reasonable engineering criteria. The Parties shall continue to develop Reciprocal Trunk Group and/or two-way interconnection trunk forecasts as described in Section 6.1.1 above.

6.3 The submission and development of interconnection trunk forecasts shall not replace the ordering process for local interconnection trunks. Each Party shall exercise its best efforts to provide the quantity of interconnection trunks mutually forecasted. However, the provision of the forecasted quantity of interconnection trunks is subject to trunk terminations and facility capacity existing at the time the trunk order is submitted. Furthermore, the receipt and development of trunk forecasts does not imply any liability for failure to perform if capacity (trunk terminations or facilities) is not available for use at the forecasted time.

6.4 Trunk Utilization

6.4.1 For the BellSouth Trunk Groups that are Final Trunk Groups (BellSouth Final Trunk Groups), BellSouth and Access Point shall monitor traffic on each BellSouth Final Trunk Group that is ordered and installed. The Parties agree that the BellSouth Final Trunk Groups will be utilized at sixty percent (60%) of the time consistent busy hour utilization level within ninety (90) days of installation. The Parties agree that the BellSouth Final Trunk Groups will be utilized at eighty percent (80%) of the time consistent busy hour utilization level within one hundred eighty (180) days of installation. Any BellSouth Final Trunk Group not meeting the minimum thresholds set forth in this Section are defined as “under-utilized” trunks. Subject to Section 6.4.2 below, BellSouth may disconnect any under-utilized BellSouth Final Trunk Groups and Access Point shall refund to BellSouth the associated nonrecurring and recurring trunk and facility charges paid by BellSouth, if any.

6.4.2 BellSouth’s CISC will notify Access Point of any under-utilized BellSouth Trunk Groups and the number of such trunk groups that BellSouth wishes to disconnect. BellSouth will provide supporting information either by email or facsimile to the designated Access Point interface. Access Point will provide concurrence with the disconnection in seven (7) business days or will provide specific information supporting why the trunks should not be disconnected. Such supporting

information should include expected traffic volumes (including traffic volumes generated due to Local Number Portability) and the timeframes within which Access Point expects to need such trunks. BellSouth's CISC Project Manager and Circuit Capacity Manager (CCM) will discuss the information with Access Point to determine if agreement can be reached on the number of BellSouth Final Trunk Groups to be removed. If no agreement can be reached, BellSouth will issue disconnect orders to Access Point. The due date of these orders will be four (4) weeks after Access Point was first notified in writing of the underutilization of the trunk groups.

6.4.3 To the extent that any interconnection trunk group is utilized at a time-consistent busy hour of eighty percent (80%) or greater, the Parties may review the trunk groups and, if necessary, shall negotiate in good faith for the installation of augmented facilities.

6.4.4 For the two-way trunk groups, BellSouth and Access Point shall monitor traffic on each interconnection trunk group that is ordered and installed. The Parties agree that within ninety (90) days of the installation of the BellSouth two-way trunk or trunks, the trunks will be utilized at 60 percent (60%) of the time consistent busy hour utilization level. The Parties agree that within one hundred eighty (180) days of the installation of a trunk or trunks, the trunks will be utilized at eighty percent (80%) of the time consistent busy hour utilization level. Any trunk or trunks not meeting the minimum thresholds set forth in this Section are defined as "under-utilized" trunks. BellSouth will request the disconnection of any under-utilized two-way trunk(s) and Access Point shall refund to BellSouth the associated nonrecurring and recurring trunk and facility charges paid by BellSouth, if any.

6.4.4.1 BellSouth's CISC will notify Access Point of any under-utilized two-way trunk groups and the number of trunks that BellSouth wishes to disconnect. BellSouth will provide supporting information either by email or facsimile to the designated Access Point interface. Access Point will provide concurrence with the disconnection in seven (7) business days or will provide specific information supporting why the two-way trunks should not be disconnected. Such supporting information should include expected traffic volumes (including traffic volumes generated due to Local Number Portability) and the timeframes within which Access Point expects to need such trunks. BellSouth's CISC Project Manager and CCM will discuss the information with Access Point to determine if agreement can be reached on the number of trunks to be removed. If no agreement can be reached, Access Point will issue disconnect orders to BellSouth. The due date of these orders will be four (4) weeks after Access Point was first notified in writing of the under-utilization of the trunk groups.

6.4.4.2 To the extent that any interconnection trunk group is utilized at a time-consistent busy hour of eighty percent (80%) or greater, the Parties may review the trunk

groups and, if necessary, shall negotiate in good faith for the installation of augmented facilities.

7 Local Dialing Parity

7.1 BellSouth and Access Point shall provide local and toll dialing parity, as defined in FCC rules and regulations, with no unreasonable dialing delays. Dialing parity shall be provided for all originating Telecommunications Services that require dialing to route a call.

8 Interconnection Compensation

8.1 Compensation for Call Transport and Termination for Local Traffic, ISP-Bound Traffic and IntraLATA Toll Traffic

8.1.1 For the purposes of this Attachment and for intercarrier compensation for Local Traffic exchanged between the Parties pursuant to this Attachment, Local Traffic is defined as any telephone call that originates from a calling party located in one exchange and terminates in either the same exchange, or other local calling area associated with the originating calling party's exchange as defined and specified in Section A3 of BellSouth's GSST.

8.1.1.1 Additionally, Local Traffic includes any cross boundary, voice-to-voice intrastate, interLATA or interstate, interLATA calls established as a local call by the ruling regulatory body.

8.1.2 For purposes of this Attachment and for intercarrier compensation for ISP-Bound Traffic exchanged between the Parties, ISP-Bound Traffic is defined as calls to an information service provider or Internet Service Provider (ISP) that are dialed by using a local dialing pattern (seven (7) or ten (10) digits) by a calling party in one (1) exchange to an ISP server or modem in either the same exchange or other local calling area associated with the originating exchange as defined and specified in Section A3 of BellSouth's GSST. ISP-Bound Traffic is not Local Traffic subject to reciprocal compensation, but instead is information access traffic subject to the FCC's jurisdiction.

8.1.3 Neither Party shall pay compensation to the other Party for per minute of use rate elements as set forth in Exhibit A associated with the Call Transport and Termination of Local Traffic or ISP-Bound Traffic.

8.1.4 The appropriate elemental rates set forth in Exhibit A shall apply for Transit Traffic as described in this Attachment and for MTA as described in this Attachment.

8.1.5 Neither Party shall represent Switched Access Traffic as Local Traffic or ISP-Bound Traffic for purposes of determining compensation for the call.

8.1.6 IntraLATA Toll Traffic is defined as all traffic, regardless of transport protocol method, that originates and terminates within a single LATA that is not Local Traffic or ISP-Bound traffic under this Attachment.

8.1.6.1 For terminating its intraLATA toll traffic on the other Party's network, the originating Party will pay the terminating Party BellSouth's current intrastate or interstate, whichever is appropriate, terminating switched access tariff rates as set forth in BellSouth's intrastate Access Services Tariffs and/or BellSouth's FCC No. 1 Tariff as filed and in effect with the FCC or appropriate Commission. The appropriate charges will be determined by the routing of the call. Additionally, if one (1) Party is the other Party's customer's presubscribed interexchange carrier or if one (1) Party's customer uses the other Party as an interexchange carrier on a 101XXXX basis, the originating party will charge the other Party the appropriate BellSouth originating switched access tariff rates as set forth in BellSouth's intrastate Access Services Tariff and/or BellSouth's FCC No. 1 Tariff as filed and in effect with the FCC or appropriate Commission.

8.1.7 If Access Point assigns NPA/NXXs to specific BellSouth rate centers within the LATA and assigns numbers from those NPA/NXXs to Access Point customer physically located outside of that LATA, BellSouth traffic originating from within the LATA where the NPA/NXXs are assigned and delivered to a Access Point customer physically located outside of such LATA, shall not be deemed Local Traffic. Further, Access Point agrees to identify such interLATA traffic to BellSouth and to compensate BellSouth for originating and transporting such interLATA traffic to Access Point at BellSouth's FCC No. 1 Tariff rates.

8.2 If Access Point does not identify such interLATA traffic to BellSouth, BellSouth will determine which whole Access Point NPA/NXXs on which to charge the applicable rates for originating network access service as reflected in BellSouth's intrastate Access Services Tariff and/or BellSouth's FCC No. 1 Tariff.. BellSouth shall make appropriate billing adjustments if Access Point can provide sufficient information for BellSouth to determine whether or not said traffic is Local or ISP-Bound Traffic.

8.3 Jurisdictional Reporting

8.3.1 Percent Local Use (PLU). Each Party shall report to the other a PLU factor. The application of the PLU will determine the amount of local or ISP-Bound minutes to be billed to the other Party. Each Party shall update its PLU on the first of January, April, July and October of the year and shall send it to the other Party to be received no later than thirty (30) days after the first of each such month based on local and ISP-Bound usage for the past three (3) months ending the last day of December, March, June and September, respectively. Requirements associated with PLU calculation and reporting shall be as set forth in BellSouth's Jurisdictional Factors Reporting Guide.

8.3.2 Percent Local Facility (PLF). Each Party shall report to the other a PLF factor. The application of the PLF will determine the portion of switched dedicated transport to be billed per the local jurisdiction rates. The PLF shall be applied to Multiplexing, Local Channel and Interoffice Channel Switched Dedicated Transport utilized in the provision of local interconnection trunks. Each Party shall update its PLF on the first of January, April, July and October of the year and shall send it to the other Party to be received no later than thirty (30) days after the first of each such month to be effective the first bill period the following month, respectively. Requirements associated with PLF calculation and reporting shall be as set forth in BellSouth's Jurisdictional Factors Reporting Guide.

8.3.3 Percent Interstate Usage (PIU). Each Party shall report to the other the projected PIU factors, including but not limited to PIU associated with facilities (PIUE) and Terminating PIU (TPIU) factors. All jurisdictional report requirements, rules and regulations for Interexchange Carriers specified in BellSouth's intrastate Access Services Tariff will apply to Access Point. After interstate and intrastate traffic percentages have been determined by use of PIU procedures, the PLU and PLF factors will be used for application and billing of local interconnection. Each Party shall update its PIUs on the first of January, April, July and October of the year and shall send it to the other Party to be received no later than thirty (30) days after the first of each such month, for all services showing the percentages of use for the past three (3) months ending the last day of December, March, June and September. Additional requirements associated with PIU calculations and reporting shall be as set forth in BellSouth's Jurisdictional Factors Reporting Guide.

8.3.4 Notwithstanding the provisions in Sections 8.3.1, 8.3.2, and 8.3.3 above, where BellSouth has message recording technology that identifies the jurisdiction of traffic terminated as defined in this Agreement, such information shall, at BellSouth's option, be utilized to determine the appropriate jurisdictional reporting factors (i.e., PLU, PIU, and/or PLF), in lieu of those provided by Access Point. In the event that BellSouth opts to utilize its own data to determine jurisdictional reporting factors, BellSouth shall notify Access Point at least fifteen (15) days prior to the beginning of the calendar quarter in which BellSouth will begin to utilize its own data.

8.3.5 Audits. On thirty (30) days written notice, Access Point must provide BellSouth the ability and opportunity to conduct an annual audit to ensure the proper billing of traffic. Access Point shall retain records of call detail for a minimum of nine (9) months from which the PLU, PLF and/or PIU can be ascertained. The audit shall be conducted during normal business hours at an office designated by Access Point. Audit requests shall not be submitted more frequently than one (1) time per calendar year. Audits shall be performed by an independent auditor chosen by BellSouth. Access Point's PLF, PLU and/or PIU shall be adjusted based upon the audit results and shall apply for the quarter the audit was completed, for the

quarter prior to the completion of the audit, and for the two (2) quarters following the completion of the audit. If, as a result of an audit, Access Point is found to have overstated the PLF, PLU and/or PIU by twenty percentage points (20%) or more, Access Point shall reimburse BellSouth for the cost of the audit.

8.4 Compensation for IntraLATA 8XX Traffic. Each Party shall pay the other the appropriate switched access charges set forth in the BellSouth's intrastate Access Services tariff and/or BellSouth's FCC No. 1 Tariff. Access Point will pay BellSouth the database query charge as set forth in the applicable BellSouth intrastate Access Services Tariff and/or BellSouth's FCC No. 1 Tariff. Access Point will be responsible for any applicable Common Channel Signaling (SS7) charges.

8.4.1 Records for 8XX Billing. Where technically feasible, each Party will provide to the other Party the appropriate records, in accordance with industry standards, necessary for billing intraLATA 8XX providers. The records provided will be in a standard EMI format.

8.4.2 8XX Toll Free Dialing Ten Digit Screening Service (8XX TFD). BellSouth's provision of 8XX TFD to Access Point requires interconnection from Access Point to BellSouth's 8XX Signal Channel Point. Such interconnections shall be established pursuant to BellSouth's Common Channel Signaling Interconnection Guidelines and Telcordia's CCS Network Interface Specification document, TR-TSV-000905. Access Point shall establish SS7 interconnection at the BellSouth LSTPs serving the BellSouth 8XX Signal Channel Points that Access Point desires to query. The terms and conditions for 8XX TFD are set out in the appropriate BellSouth Access Services Tariff.

8.5 Mutual Provision of Switched Access Service

8.5.1 Switched Access Traffic. Switched Access Traffic is described as telephone calls requiring local transmission or switching services for the purpose of the origination or termination of Telephone Toll Service. Switched Access Traffic includes, but is not limited to, the following types of traffic: Feature Group A, Feature Group B, Feature Group C, Feature Group D, toll free access (e.g., 8XX), 900 access and their successors. Additionally, any PSTN interexchange telecommunications traffic, regardless of transport protocol method, where the originating and terminating points, end-to-end points, are in different LATAs, or are in the same LATA and the Parties' Switched Access services are used for the origination or termination of the call, shall be considered Switched Access Traffic. Irrespective of transport protocol method or method of originating or terminating the call, a call that originates in one LATA and terminates in another LATA (i.e., the end-to-end points of the call) or a call in which the Parties' Switched Access Services are used for the origination or termination of the call, shall be considered Switched Access Traffic.

8.5.2 If a BellSouth end user chooses Access Point as their presubscribed interexchange carrier, or if a BellSouth end user uses Access Point as an interexchange carrier on a 101XXXX basis, BellSouth will charge Access Point the appropriate BellSouth tariff charges for originating switched access services.

8.5.3 Where the originating Party delivers a call to the terminating Party over switched access facilities, the originating Party will pay the terminating Party terminating, switched access charges as set forth in BellSouth's intrastate Access Services Tariff and/or BellSouth's FCC No. 1 Tariff, as appropriate.

8.5.4 When Access Point's end office switch provides an access service connection to or from an IXC by a direct trunk group to the IXC utilizing BellSouth facilities, each Party will provide its own access services to the IXC and bill on a multi-bill, multi-tariff meet-point basis. Each Party will bill its own access services rates to the IXC with the exception of the interconnection charge. The interconnection charge will be billed by Access Point as the Party providing the end office function. Each party will use the Multiple Exchange Carrier Access Billing (MECAB) guidelines to establish Meet Point Billing for all applicable traffic. The Parties shall utilize a thirty (30) day billing period.

8.5.4.1 When Access Point's end office subtends the BellSouth Access Tandem switch for receipt or delivery of switched access traffic and provides an access service connection to or from an IXC via BellSouth's Access Tandem switch, BellSouth, as the tandem company agrees to provide to Access Point, as the End Office Company, as defined in MECAB, at no charge, all the switched access detail usage data, recorded at the access tandem, within no more than sixty (60) days after the recording date. Each Party will notify the other when it is not feasible to meet these requirements. As business requirements change, data reporting requirements may be modified as necessary.

8.5.5 BellSouth, as the tandem provider company, will retain for a minimum period of sixty (60) days, access message detail sufficient to recreate any data that is lost or damaged by the tandem provider company or any third party involved in processing or transporting data.

8.5.6 Access Point agrees not to deliver switched access traffic to BellSouth for termination except over Access Point ordered switched access trunks and facilities.

8.6 <u>Transit Traffic</u>

8.6.1 BellSouth shall provide tandem switching and transport services for Access Point's Transit Traffic. Rates for local Transit Traffic and ISP-Bound Transit Traffic shall be the applicable rate elements for Tandem Switching, Common Transport and Tandem Intermediary Charge as set forth in Exhibit A. Rates for Switched Access Transit Traffic shall be the applicable charges as set forth in BellSouth's intrastate Access Services Tariff and/or BellSouth's FCC No. 1 Tariff. Billing associated

with all Transit Traffic shall be pursuant to MECAB guidelines. Traffic between Access Point and Wireless Type 1 third parties or Wireless Type 2A third parties that do not engage in Meet Point Billing with BellSouth shall not be treated as Transit Traffic from a routing or billing perspective until such time as such traffic is identifiable as Transit Traffic.

8.6.2 The delivery of traffic that transits the BellSouth network is excluded from any BellSouth billing guarantees. BellSouth agrees to deliver Transit Traffic to the terminating carrier; provided, however, that Access Point is solely responsible for negotiating and executing any appropriate contractual agreements with the terminating carrier for the exchange of Transit Traffic through the BellSouth network. BellSouth will not be liable for any compensation to the terminating carrier or to Access Point. In the event that the terminating third party carrier imposes on BellSouth any charges or costs for the delivery of Transit Traffic, Access Point shall reimburse BellSouth for such charges or costs.

8.7 For purposes of intercarrier compensation, BellSouth will not be responsible for any compensation associated with the exchange of traffic between Access Point and a CLEC utilizing BellSouth switching. Where technically feasible, BellSouth will use commercially reasonable efforts to provide records to Access Point to identify those CLECs utilizing BellSouth switching with whom Access Point has exchanged traffic. Such traffic shall not be considered Transit Traffic from a routing or billing perspective, but instead will be considered as traffic exchanged solely between Access Point and the CLEC utilizing BellSouth switching.

8.7.1 Access Point is solely responsible for negotiating and executing any appropriate contractual agreements with the terminating carrier for the exchange of traffic with a CLEC utilizing BellSouth switching. BellSouth will not be liable for any compensation to the terminating carrier or to Access Point. In the event that the terminating third party carrier imposes on BellSouth any charges or costs for the delivery of such traffic, Access Point shall reimburse BellSouth for all such charges or costs.

8.8 Access Point shall send all IntraLATA toll traffic to be terminated by an independent telephone company to the End User's IntraLATA toll provider and shall not send such traffic to BellSouth as Transit Traffic. IntraLATA toll traffic shall be any traffic that originates outside of the terminating independent telephone company's local calling area.

9 Ordering Charges

9.1 The facilities purchased pursuant to this Attachment shall be ordered via the ASR process.

9.2 The rates, terms and conditions associated with submission and processing of ASRs are as set forth in BellSouth's FCC No. 1 Tariff, Section 5.

10 Basic 911 and E911 Interconnection

10.1 Basic 911 and E911 provides a caller access to the applicable emergency service bureau by dialing 911.

10.2 Basic 911 Interconnection. BellSouth will provide to Access Point a list consisting of each municipality that subscribes to Basic 911 service. The list will also provide, if known, the E911 conversion date for each municipality and, for network routing purposes, a ten (10) digit directory number representing the appropriate emergency answering position for each municipality subscribing to 911. Access Point will be required to arrange to accept 911 calls from its end users in municipalities that subscribe to Basic 911 service and translate the 911 call to the appropriate ten (10) digit directory number as stated on the list provided by BellSouth. Access Point will be required to route that call to the appropriate PSAP. When a municipality converts to E911 service, Access Point will be required to begin using E911 procedures.

10.3 E911 Interconnection. Access Point shall install a minimum of two (2) dedicated trunks originating from its SWC and terminating to the appropriate E911 tandem. The SWC must be in the same LATA as the E911 tandem. The dedicated trunks shall be, at a minimum, DS0 level trunks configured as part of a digital (one point five forty-four (1.544) Mb/s) interface (DS1 facility). The configuration shall use CAMA-type signaling with MF pulsing or SS7/ISUP signaling either of which shall deliver ANI with the voice portion of the call. If SS7/ISUP connectivity is used, Access Point shall follow the procedures as set forth in Appendix A of the CLEC Users Guide to E911 for Facility Based Providers that is located on the BellSouth Interconnection Web site. If the user interface is digital, MF pulses as well as other AC signals shall be encoded per the u-255 Law convention. Access Point will be required to provide BellSouth daily updates to the E911 database. Access Point will be required to forward 911 calls to the appropriate E911 tandem along with ANI based upon the current E911 end office to tandem homing arrangement as provided by BellSouth. If the E911 tandem trunks are not available, Access Point will be required to route the call to a designated seven (7) digit or ten (10) digit local number residing in the appropriate PSAP. This call will be transported over BellSouth's interoffice network and will not carry the ANI of the calling party. Access Point shall be responsible for providing BellSouth with complete and accurate data for submission to the 911/E911 database for the purpose of providing 911/E911 to its end users.

10.4 Trunks and facilities for 911 Interconnection may be ordered by Access Point from BellSouth pursuant to the terms and conditions set forth in this Attachment.

10.5 The detailed practices and procedures for 911/E911 interconnection are contained in the E911 Local Exchange Carrier Guide For Facility-Based Providers that is located on the BellSouth Interconnection Services Web site.

11 SS7 Network Interconnection

11.1 SS7 Signaling. Both Parties will utilize LEC-to-LEC SS7 Signaling, where available, in conjunction with all traffic in order to enable interoperability of CLASS features and functions except for call return. SS7 signaling parameters will be provided, including but not limited to ANI, originating line information (OLI) calling company category and charge number. Privacy indicators will be honored, and the Parties will exchange Transactional Capabilities Application Part (TCAP) messages to facilitate SS7 based features between the respective networks. Neither Party shall alter the SS7 parameters, or be a party to altering such parameters, or knowingly pass SS7 parameters that have been altered in order to circumvent appropriate interconnection charges. Nothing herein shall obligate or otherwise require BellSouth to send SS7 messages or call-related database queries to Access Point's or any other third party's call-related database, unless otherwise agreed to by the Parties under a separate agreement.

11.2 Signaling Call Information. BellSouth and Access Point will send and receive ten (10) digits for Local Traffic. Additionally, BellSouth and Access Point will exchange the proper call information, (i.e., originated call company number and destination call company number, CIC, and OZZ) including all proper translations for routing between networks and any information necessary for billing.

11.3 SS7 Network Interconnection is the interconnection of Access Point LSTP switches or Access Point local or tandem switching systems with BellSouth STP switches. This interconnection provides connectivity that enables the exchange of SS7 messages among BellSouth switching systems and databases, Access Point local or tandem switching systems, and other third party switching systems directly connected to the BellSouth SS7 network.

11.3.1 The connectivity provided by SS7 Network Interconnection shall fully support the functions of BellSouth switching systems and databases and Access Point or other third party switching systems with A-link access to the BellSouth SS7 network.

11.3.2 If traffic is routed based on dialed or translated digits between a Access Point local switching system and a BellSouth or other third party local switching system, either directly or via a BellSouth tandem switching system, then it is a requirement that the BellSouth SS7 network convey via SS7 Network Interconnection the TCAP messages that are necessary to provide Call Management services (i.e., Automatic Callback, Automatic Recall, and Screening List Editing) between the Access Point LSTP switches and BellSouth or other third party local switch.

11.3.3 SS7 Network Interconnection shall provide:

11.3.3.1 Signaling Data Link functions, as specified in ANSI T1.111.2;

11.3.3.2 Signaling Link functions, as specified in ANSI T1.111.3; and

11.3.3.3 Signaling Network Management functions, as specified in ANSI T1.111.4.

11.3.4 SS7 Network Interconnection shall provide all functions of the SCCP necessary for Class 0 (basic connectionless) service as specified in ANSI T1.112. This includes GTT and SCCP Management procedures as specified in ANSI T1.112.4. Where the destination signaling point is a BellSouth switching system or DB, or is another third party local or tandem switching system directly connected to the BellSouth SS7 network, SS7 Network Interconnection shall include final GTT of messages to the destination and SCCP Subsystem Management of the destination. Where the destination signaling point is a Access Point local or tandem switching system, SS7 Network Interconnection shall include intermediate GTT of messages to a gateway pair of Access Point LSTPs and shall not include SCCP Subsystem Management of the destination.

11.3.5 SS7 Network Interconnection shall provide all functions of the ISUP as specified in ANSI T1.113.

11.3.6 SS7 Network Interconnection shall provide all functions of the TCAP as specified in ANSI T1.114.

11.3.7 If Internetwork MRVT and SRVT become approved ANSI standards and available capabilities of BellSouth STPs, SS7 Network Interconnection may provide these functions of the OMAP.

11.4 Interface Requirements. The following SS7 Network Interconnection interface options are available to connect Access Point or Access Point-designated local or tandem switching systems or signaling transfer point switches to the BellSouth SS7 network:

11.4.1 A-link interface from Access Point local or tandem switching systems; and

11.4.2 B-link interface from Access Point STPs.

11.4.3 The Signaling Point of Interconnection for each link shall be located at a cross-connect element in the central office where the BellSouth STP is located. There shall be a DS1 or higher rate transport interface at each of the signaling points of interconnection. Each signaling link shall appear as a DS0 channel within the DS1 or higher rate interface.

11.4.4 BellSouth shall provide intraoffice diversity between the Signaling Point of Interconnection and the BellSouth STP, so that no single failure of intraoffice facilities or equipment shall cause the failure of both B-links in a layer connecting to a BellSouth STP.

11.4.5 The protocol interface requirements for SS7 Network Interconnection include the MTP, ISUP, SCCP, and TCAP. These protocol interfaces shall conform to the applicable industry standard technical references.

11.4.6 BellSouth shall set message screening parameters to accept messages from Access Point local or tandem switching systems destined to any signaling point in the BellSouth SS7 network with which the Access Point switching system has a valid signaling relationship.

11.5 Rates. The Parties shall institute a "bill and keep" compensation plan under which neither Party will charge the other Party recurring and nonrecurring charges as set forth in Exhibit A for CCS7signaling messages associated with Local Traffic. The portion of CCS7 signaling messages utilized for Local Traffic, which are subject to bill and keep in accordance with this section, shall be determined based upon the application of the applicable signaling factors set forth in BellSouth's Jurisdictional Factors Reporting Guide. The remaining portion of the CCS7 signaling messages, signaling ports, and signaling links, i.e. the portion associated with interstate calls and with intrastate non-local calls, shall be billed in accordance with the applicable BellSouth intrastate Access Services Tariff and BellSouth's FCC No. 1 Tariff for switched access services.

Exhibit B

Basic Architecture

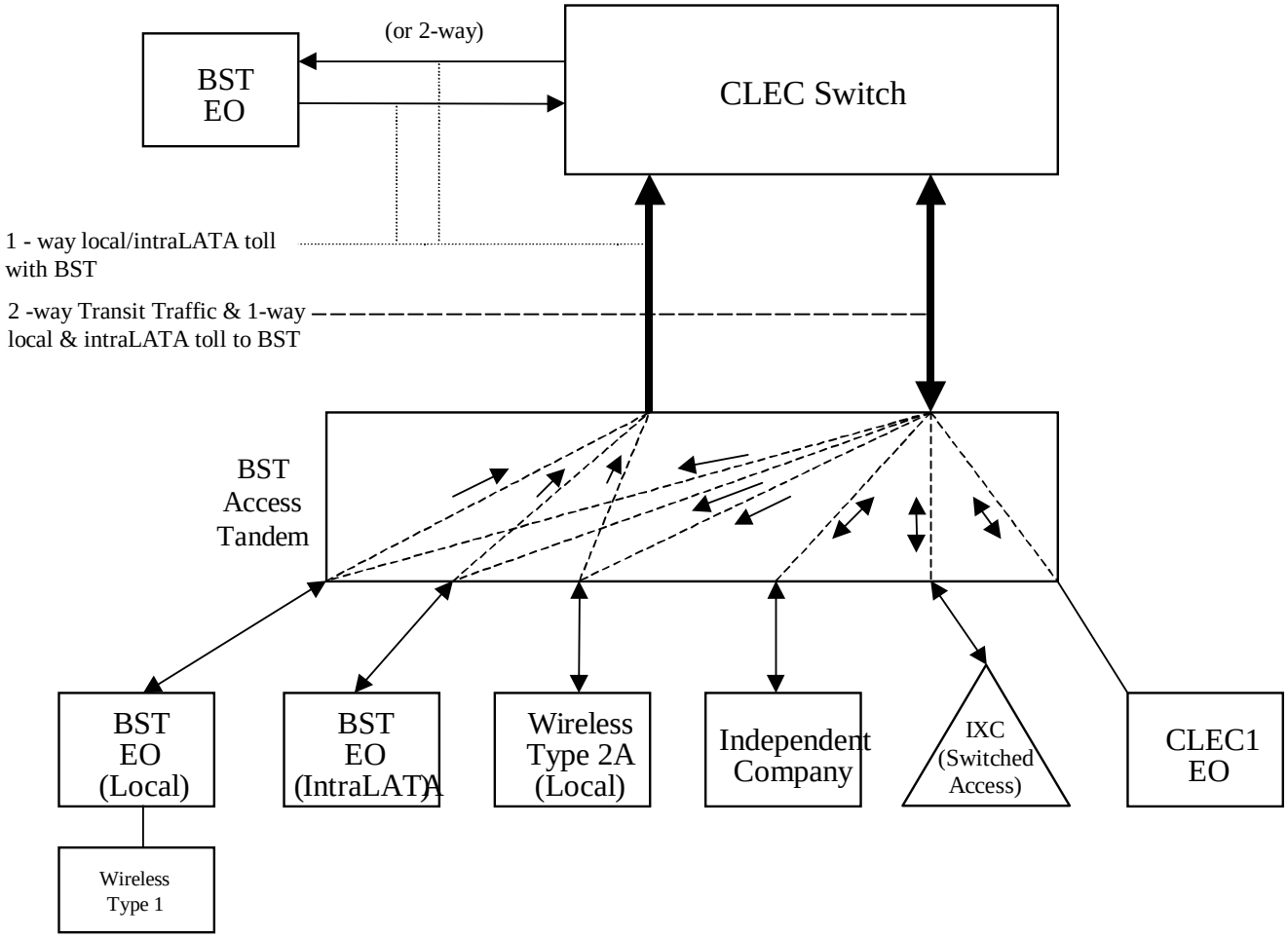

Version: 4Q0
11/30/05

Exhibit C

One-Way Architecture

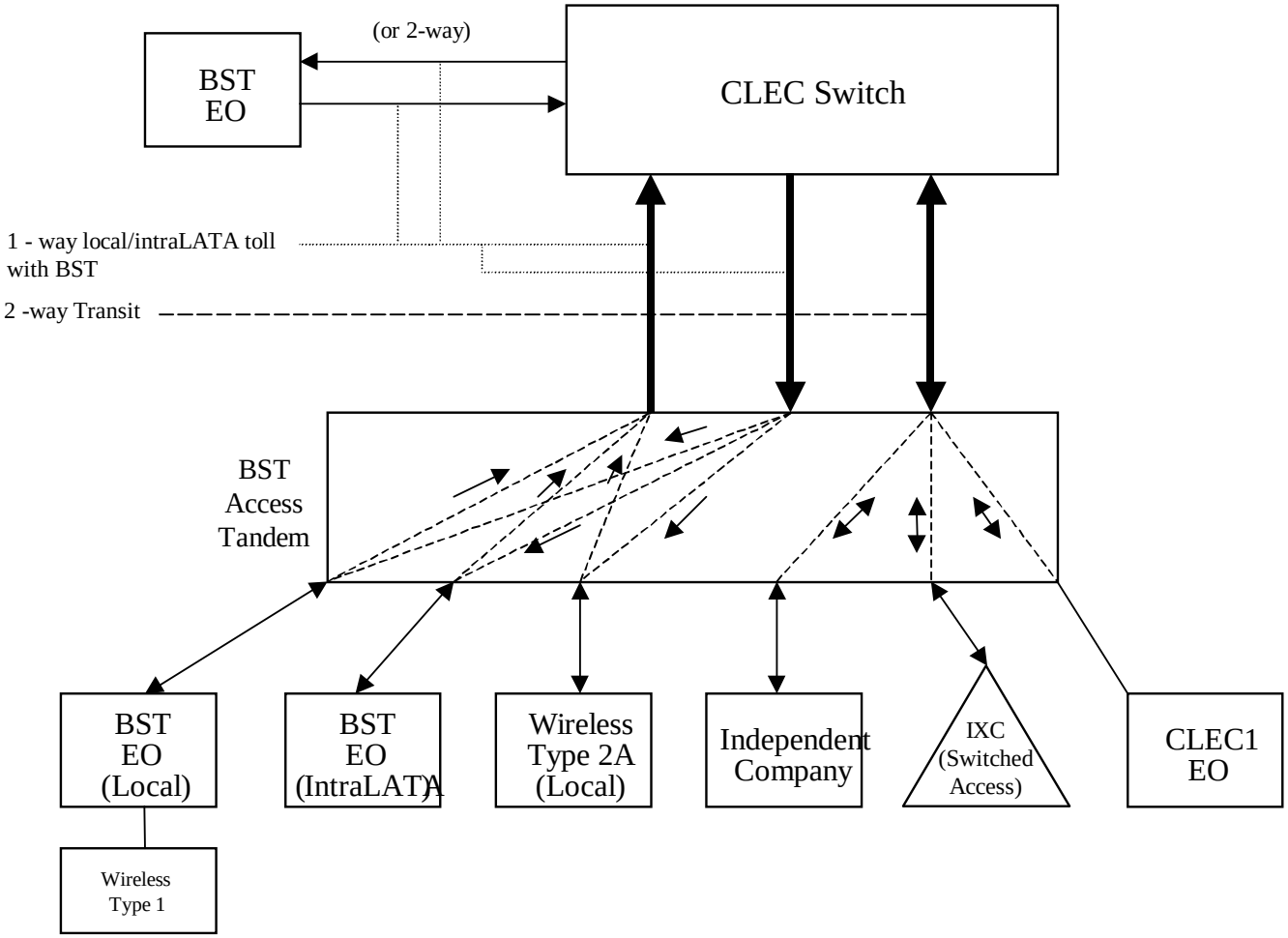

Version: 4Q0
11/30/05

Exhibit D

Two-Way Architecture

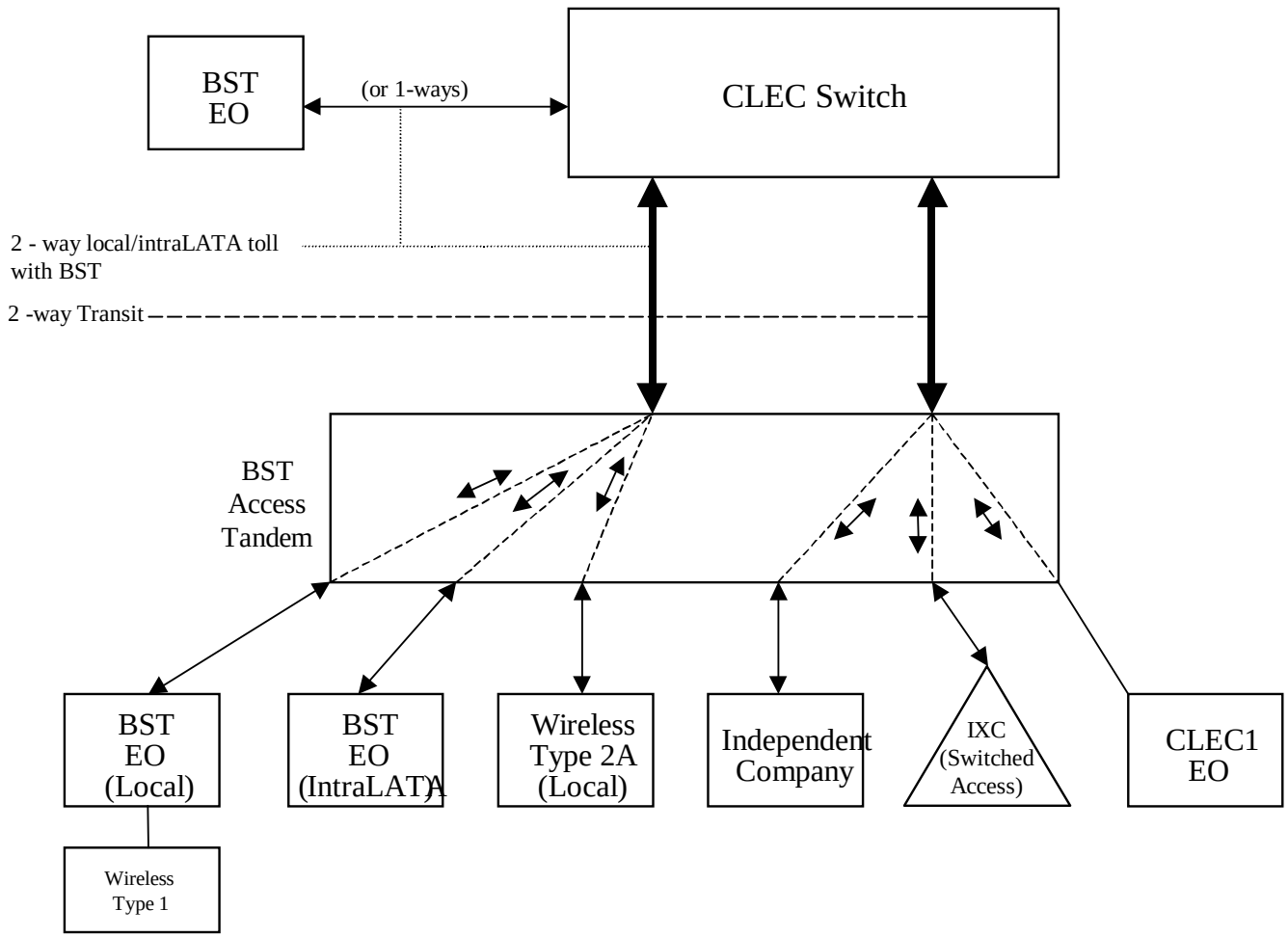

Version: 4Q0
11/30/05

Exhibit E

Supergroup Architecture

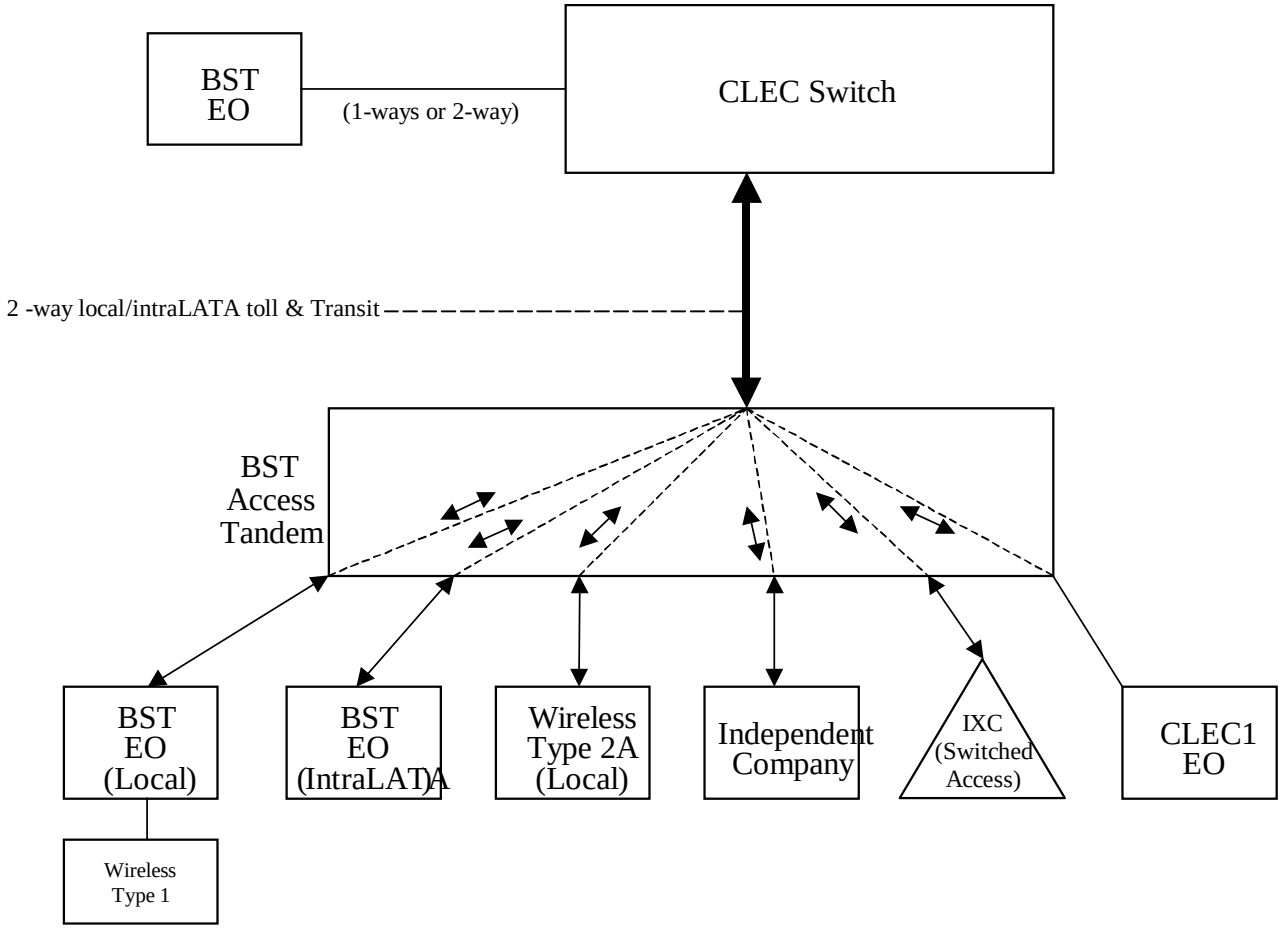

LOCAL INTERCONNECTION - Alabama														Attachment: 3 Exh A			
CATEGORY	RATE ELEMENTS	Interim	Zone	BCS	USOC		RATES($)				Svc Order Submitted Elec per LSR	Svc Order Submitted Manually per LSR	Incremental Charge - Manual Svc Order vs. Electronic-1st	Incremental Charge - Manual Svc Order vs. Electronic-Add'l	Incremental Charge - Manual Svc Order vs. Electronic-Disc 1st	Incremental Charge - Manual Svc Order vs. Electronic-Disc Add'l
						Rec	Nonrecurring		Nonrecurring Disconnect		OSS Rates($)					
							First	Add'l	First	Add'l	SOMEC	SOMAN	SOMAN	SOMAN	SOMAN	SOMAN
LOCAL INTERCONNECTION (CALL TRANSPORT AND TERMINATION)																
NOTE: "bk" beside a rate indicates that the Parties have agreed to bill and keep for that element pursuant to the terms and conditions in Attachment 3.																
TANDEM SWITCHING																
	Tandem Switching Function Per MOU					0.0004980bk										
	Multiple Tandem Switching, per MOU (applies to intial tandem only)					0.000498										
	Tandem Intermediary Charge, per MOU*					0.0025										
*** This charge is applicable only to transit traffic and is applied in addition to applicable switching and/or interconnection charges.**																
TRUNK CHARGE																
	Installation Trunk Side Service - per DS0			OHD	TPP6X		21.56	8.12								
	Installation Trunk Side Service - per DS0			OHD	TPP9X		21.56	8.12								
	Dedicated End Office Trunk Port Service-per DS0**			OHD	TDEOP	0.00										
	Dedicated End Office Trunk Port Service-per DS1**			OH1 OH1MS	TDE1P	0.00										
	Dedicated Tandem Trunk Port Service-per DS0**			OHD	TDWOP	0.00										
	Dedicated Tandem Trunk Port Service-per DS1**			OH1 OH1MS	TDW1P	0.00										
**** This rate element is recovered on a per MOU basis and is included in the End Office Switching and Tandem Switching, per MOU rate elements**																
COMMON TRANSPORT (Shared)																
	Common Transport - Per Mile, Per MOU					0.0000023bk										
	Common Transport - Facilities Termination Per MOU					0.0003224bk										
LOCAL INTERCONNECTION (DEDICATED TRANSPORT)																
INTEROFFICE CHANNEL - DEDICATED TRANSPORT																
	Interoffice Channel - Dedicated Transport - 2-Wire Voice Grade - Per Mile per month			OHM	1L5NF	0.008838										
	Interoffice Channel - Dedicated Transport- 2- Wire Voice Grade - Facility Termination per month			OHM	1L5NF	21.13	40.54	27.41	16.74	6.90						
	Interoffice Channel - Dedicated Transport - 56 kbps - per mile per month			OHM	1L5NK	0.008838										
	Interoffice Channel - Dedicated Transport - 56 kbps - Facility Termination per month			OHM	1L5NK	15.12	40.54	27.41	16.74	6.90						
	Interoffice Channel - Dedicated Transport - 64 kbps - per mile per month			OHM	1L5NK	0.008838										
	Interoffice Channel - Dedicated Transport - 64 kbps - Facility Termination per month			OHM	1L5NK	15.12	40.54	27.41	16.74	6.90						
	Interoffice Channel - Dedicated Channel - DS1 - Per Mile per month			OH1, OH1MS	1L5NL	0.18										
	Interoffice Channel - Dedicated Tranport - DS1 - Facility Termination per month			OH1, OH1MS	1L5NL	60.16	89.27	81.81	16.35	14.44						
	Interoffice Channel - Dedicated Transport - DS3 - Per Mile per month			OH3, OH3MS	1L5NM	4.09										
	Interoffice Channel - Dedicated Transport - DS3 - Facility Termination per month			OH3, OH3MS	1L5NM	703.52	278.75	162.76	60.20	58.46						
LOCAL CHANNEL - DEDICATED TRANSPORT																
	Local Channel - Dedicated - 2-Wire Voice Grade per month			OHM	TEFV2	13.97	193.10	33.17	36.64	3.20						
	Local Channel - Dedicated - 4-Wire Voice Grade per month			OHM	TEFV4	14.93	193.53	33.60	37.11	3.67						
	Local Channel - Dedicated - DS1 per month			OH1	TEFHG	35.76	177.47	153.72	22.19	15.26						
	Local Channel - Dedicated - DS3 Facility Termination per month			OH3	TEFHJ	416.54	451.52	263.94	119.49	83.58						
LOCAL INTERCONNECTION MID-SPAN MEET																
	Local Channel - Dedicated - DS1 per month			OH1MS	TEFHG	0.00	0.00									
	Local Channel - Dedicated - DS3 per month			OH3MS	TEFHJ	0.00	0.00									
MULTIPLEXERS																
	Channelization - DS1 to DS0 Channel System			OH1, OH1MS	SATN1	101.06	91.04	62.57	10.54	9.79						
	DS3 to DS1 Channel System per month			OH3, OH3MS	SATNS	166.13	178.14	93.97	33.26	31.63						
	DS3 Interface Unit (DS1 COCI) per month			OH1, OH1MS	SATCO	12.70	6.58	4.72								
Notes: If no rate is identified in the contract, the rates, terms, and conditions for the specific service or function will be as set forth in applicable BellSouth tariff.																
SIGNALING (CCS7)																
NOTE:"bk" beside a rate indicates that the parties have agreed to bill and keep for that element pursuant to the terms and conditions in Attachment 3.																
	CCS7 Signaling Termination, Per STP Port			UDB	PT8SX	130.83										

LOCAL INTERCONNECTION - Alabama														Attachment: 3 Exh A			
CATEGORY		RATE ELEMENTS	Interim	Zone	BCS	USOC		RATES($)				Svc Order Submitted Elec per LSR	Svc Order Submitted Manually per LSR	Incremental Charge - Manual Svc Order vs. Electronic-1st	Incremental Charge - Manual Svc Order vs. Electronic-Add'l	Incremental Charge - Manual Svc Order vs. Electronic-Disc 1st	Incremental Charge - Manual Svc Order vs. Electronic-Disc Add'l
							Rec	Nonrecurring		Nonrecurring Disconnect		OSS Rates($)					
								First	Add'l	First	Add'l	SOMEC	SOMAN	SOMAN	SOMAN	SOMAN	SOMAN
		CCS7 Signaling Usage, Per TCAP Message					0.0000569										
		CCS7 Signaling Connection, Per DS1 level link (A link)			UDB	TPP6A	15.46	35.53	35.53	16.44	16.44						
		CCS7 Signaling Connection, Per DS3 level link (A link)			UDB	TPP9A	15.46	35.53	35.53	16.44	16.44						
		CCS7 Signaling Connection, Per DS1 level link (B link) (also known as D link)			UDB	TPP6B	15.46	35.53	35.53	16.44	16.44						
		CCS7 Signaling Connection, Per DS3 level link (B link) (also known as D link)			UDB	TPP9B	15.46	35.53	35.53	16.44	16.44						
		CCS7 Signaling Usage, Per ISUP Message					0.0000142bk										
		CCS7 Signaling Usage Surrogate, per link per LATA			UDB	STU56	650.33bk										
		CCS7 Signaling Point Code, per Originating Point Code Establishment or Change, per STP affected			UDB	CCAPO		29.01	29.01	35.57	35.57						
		CCS7 Signaling Connection, Switched access service, interface groups, transmissiom paths 6 DS1 level path with bit stream signaling			UDB	TPP6X	15.46	35.53	35.53	16.44	16.44						
		CCS7 Signaling Connection, Switched access service, interface groups, transmissiom paths 9 DS3 level path with bit stream signaling			UDB	TPP9X	15.46	35.53	35.53	16.44	16.44						

LOCAL INTERCONNECTION - Florida														Attachment: 3 Exh A			
CATEGORY	RATE ELEMENTS	Interim	Zone	BCS	USOC		RATES($)				Svc Order Submitted Elec per LSR	Svc Order Submitted Manually per LSR	Incremental Charge - Manual Svc Order vs. Electronic-1st	Incremental Charge - Manual Svc Order vs. Electronic-Add'l	Incremental Charge - Manual Svc Order vs. Electronic-Disc 1st	Incremental Charge - Manual Svc Order vs. Electronic-Disc Add'l
						Rec	Nonrecurring		Nonrecurring Disconnect		OSS Rates($)					
							First	Add'l	First	Add'l	SOMEC	SOMAN	SOMAN	SOMAN	SOMAN	SOMAN
LOCAL INTERCONNECTION (CALL TRANSPORT AND TERMINATION)																
NOTE: "bk" beside a rate indicates that the Parties have agreed to bill and keep for that element pursuant to the terms and conditions in Attachment 3.																
TANDEM SWITCHING																
	Tandem Switching Function Per MOU					0.0006019bk										
	Multiple Tandem Switching, per MOU (applies to intial tandem only)					0.0006019										
	Tandem Intermediary Charge, per MOU*					0.0025										
*** This charge is applicable only to transit traffic and is applied in addition to applicable switching and/or interconnection charges.**																
TRUNK CHARGE																
	Installation Trunk Side Service - per DS0			OHD	TPP6X		21.73	8.19								
	Installation Trunk Side Service - per DS0			OHD	TPP9X		21.73	8.19								
	Dedicated End Office Trunk Port Service-per DS0**			OHD	TDEOP	0.00										
	Dedicated End Office Trunk Port Service-per DS1**			OH1 OH1MS	TDE1P	0.00										
	Dedicated Tandem Trunk Port Service-per DS0**			OHD	TDWOP	0.00										
	Dedicated Tandem Trunk Port Service-per DS1**			OH1 OH1MS	TDW1P	0.00										
**** This rate element is recovered on a per MOU basis and is included in the End Office Switching and Tandem Switching, per MOU rate elements**																
COMMON TRANSPORT (Shared)																
	Common Transport - Per Mile, Per MOU					0.0000035bk										
	Common Transport - Facilities Termination Per MOU					0.0004372bk										
LOCAL INTERCONNECTION (DEDICATED TRANSPORT)																
INTEROFFICE CHANNEL - DEDICATED TRANSPORT																
	Interoffice Channel - Dedicated Transport - 2-Wire Voice Grade - Per Mile per month			OHM	1L5NF	0.0091										
	Interoffice Channel - Dedicated Transport- 2- Wire Voice Grade - Facility Termination per month			OHM	1L5NF	25.32	47.35	31.78	18.31	7.03						
	Interoffice Channel - Dedicated Transport - 56 kbps - per mile per month			OHM	1L5NK	0.0091										
	Interoffice Channel - Dedicated Transport - 56 kbps - Facility Termination per month			OHM	1L5NK	18.44	47.35	31.78	18.31	7.03						
	Interoffice Channel - Dedicated Transport - 64 kbps - per mile per month			OHM	1L5NK	0.0091										
	Interoffice Channel - Dedicated Transport - 64 kbps - Facility Termination per month			OHM	1L5NK	18.44	47.35	31.78	18.31	7.03						
	Interoffice Channel - Dedicated Channel - DS1 - Per Mile per month			OH1, OH1MS	1L5NL	0.1856										
	Interoffice Channel - Dedicated Tranport - DS1 - Facility Termination per month			OH1, OH1MS	1L5NL	88.44	105.54	98.47	21.47	19.05						
	Interoffice Channel - Dedicated Transport - DS3 - Per Mile per month			OH3, OH3MS	1L5NM	3.87										
	Interoffice Channel - Dedicated Transport - DS3 - Facility Termination per month			OH3, OH3MS	1L5NM	1,071.00	335.46	219.28	72.03	70.56						
LOCAL CHANNEL - DEDICATED TRANSPORT																
	Local Channel - Dedicated - 2-Wire Voice Grade per month			OHM	TEFV2	19.66	265.84	46.97	37.63	4.00						
	Local Channel - Dedicated - 4-Wire Voice Grade per month			OHM	TEFV4	20.45	266.54	47.67	44.22	5.33						
	Local Channel - Dedicated - DS1 per month			OH1	TEFHG	36.49	216.65	183.54	24.30	16.95						
	Local Channel - Dedicated - DS3 Facility Termination per month			OH3	TEFHJ	531.91	556.37	343.01	139.13	96.84						
LOCAL INTERCONNECTION MID-SPAN MEET																
	Local Channel - Dedicated - DS1 per month			OH1MS	TEFHG	0.00	0.00									
	Local Channel - Dedicated - DS3 per month			OH3MS	TEFHJ	0.00	0.00									
MULTIPLEXERS																
	Channelization - DS1 to DS0 Channel System			OH1, OH1MS	SATN1	146.77	101.42	71.62	11.09	10.49						
	DS3 to DS1 Channel System per month			OH3, OH3MS	SATNS	211.19	199.28	118.64	40.34	39.07						
	DS3 Interface Unit (DS1 COCI) per month			OH1, OH1MS	SATCO	13.76	10.07	7.08								
Notes: If no rate is identified in the contract, the rates, terms, and conditions for the specific service or function will be as set forth in applicable BellSouth tariff.																
SIGNALING (CCS7)																
NOTE:"bk" beside a rate indicates that the parties have agreed to bill and keep for that element pursuant to the terms and conditions in Attachment 3.																
	CCS7 Signaling Termination, Per STP Port			UDB	PT8SX	135.05										

LOCAL INTERCONNECTION - Florida														Attachment: 3 Exh A			
CATEGORY		RATE ELEMENTS	Interim	Zone	BCS	USOC		RATES($)				Svc Order Submitted Elec per LSR	Svc Order Submitted Manually per LSR	Incremental Charge - Manual Svc Order vs. Electronic-1st	Incremental Charge - Manual Svc Order vs. Electronic-Add'l	Incremental Charge - Manual Svc Order vs. Electronic-Disc 1st	Incremental Charge - Manual Svc Order vs. Electronic-Disc Add'l
							Rec	Nonrecurring		Nonrecurring Disconnect		OSS Rates($)					
								First	Add'l	First	Add'l	SOMEC	SOMAN	SOMAN	SOMAN	SOMAN	SOMAN
		CCS7 Signaling Usage, Per TCAP Message					0.0000607										
		CCS7 Signaling Connection, Per DS1 level link (A link)			UDB	TPP6A	17.93	43.57	43.57	18.31	18.31						
		CCS7 Signaling Connection, Per DS3 level link (A link)			UDB	TPP9A	17.93	43.57	43.57	18.31	18.31						
		CCS7 Signaling Connection, Per DS1 level link (B link) (also known as D link)			UDB	TPP6B	17.93	43.57	43.57	18.31	18.31						
		CCS7 Signaling Connection, Per DS3 level link (B link) (also known as D link)			UDB	TPP9B	17.93	43.57	43.57	18.31	18.31						
		CCS7 Signaling Usage, Per ISUP Message					0.0000152bk										
		CCS7 Signaling Usage Surrogate, per link per LATA			UDB	STU56	694.32bk										
		CCS7 Signaling Point Code, per Originating Point Code Establishment or Change, per STP affected			UDB	CCAPO		46.03	46.03	46.03	46.03						
		CCS7 Signaling Point Code, per Destination Point Code Establishment or Change, Per Stp Affected			UDB	CCAPD											
		CCS7 Signaling Connection, Switched access service, interface groups, transmissiom paths 6 DS1 level path with bit stream signaling			UDB	TPP6X	17.93	43.57	43.57	18.31	18.31						
		CCS7 Signaling Connection, Switched access service, interface groups, transmissiom paths 9 DS3 level path with bit stream signaling			UDB	TPP9X	17.93	43.57	43.57	18.31	18.31						

LOCAL INTERCONNECTION - Georgia														Attachment: 3 Exh A			
CATEGORY	RATE ELEMENTS	Interim	Zone	BCS	USOC		RATES($)				Svc Order Submitted Elec per LSR	Svc Order Submitted Manually per LSR	Incremental Charge - Manual Svc Order vs. Electronic-1st	Incremental Charge - Manual Svc Order vs. Electronic-Add'l	Incremental Charge - Manual Svc Order vs. Electronic-Disc 1st	Incremental Charge - Manual Svc Order vs. Electronic-Disc Add'l
						Rec	Nonrecurring		Nonrecurring Disconnect		OSS Rates($)					
							First	Add'l	First	Add'l	SOMEC	SOMAN	SOMAN	SOMAN	SOMAN	SOMAN
LOCAL INTERCONNECTION (CALL TRANSPORT AND TERMINATION)																
NOTE: "bk" beside a rate indicates that the Parties have agreed to bill and keep for that element pursuant to the terms and conditions in Attachment 3.																
TANDEM SWITCHING																
	Tandem Switching Function Per MOU					0.0004186bk										
	Multiple Tandem Switching, per MOU (applies to intial tandem only)					0.0004186										
	Tandem Intermediary Charge, per MOU*					0.0025										
*** This charge is applicable only to transit traffic and is applied in addition to applicable switching and/or interconnection charges.**																
TRUNK CHARGE																
	Installation Trunk Side Service - per DS0			OHD	TPP6X		21.53	8.11								
	Installation Trunk Side Service - per DS0			OHD	TPP9X		21.53	8.11								
	Dedicated End Office Trunk Port Service-per DS0**			OHD	TDEOP	0.00										
	Dedicated End Office Trunk Port Service-per DS1**			OH1 OH1MS	TDE1P	0.00										
	Dedicated Tandem Trunk Port Service-per DS0**			OHD	TDWOP	0.00										
	Dedicated Tandem Trunk Port Service-per DS1**			OH1 OH1MS	TDW1P	0.00										
**** This rate element is recovered on a per MOU basis and is included in the End Office Switching and Tandem Switching, per MOU rate elements**																
COMMON TRANSPORT (Shared)																
	Common Transport - Per Mile, Per MOU					0.0000028bk										
	Common Transport - Facilities Termination Per MOU					0.0001955bk										
LOCAL INTERCONNECTION (DEDICATED TRANSPORT)																
INTEROFFICE CHANNEL - DEDICATED TRANSPORT																
	Interoffice Channel - Dedicated Transport - 2-Wire Voice Grade - Per Mile per month			OHM	1L5NF	0.0059										
	Interoffice Channel - Dedicated Transport- 2- Wire Voice Grade - Facility Termination per month			OHM	1L5NF	13.15	48.41	19.46	16.56	4.99						
	Interoffice Channel - Dedicated Transport - 56 kbps - per mile per month			OHM	1L5NK	0.0059										
	Interoffice Channel - Dedicated Transport - 56 kbps - Facility Termination per month			OHM	1L5NK	8.00	48.41	19.46	16.56	4.99						
	Interoffice Channel - Dedicated Transport - 64 kbps - per mile per month			OHM	1L5NK	0.0059										
	Interoffice Channel - Dedicated Transport - 64 kbps - Facility Termination per month			OHM	1L5NK	8.00	48.41	19.46	16.56	4.99						
	Interoffice Channel - Dedicated Channel - DS1 - Per Mile per month			OH1, OH1MS	1L5NL	0.1199										
	Interoffice Channel - Dedicated Tranport - DS1 - Facility Termination per month			OH1, OH1MS	1L5NL	34.93	110.92	80.20	31.33	21.71						
	Interoffice Channel - Dedicated Transport - DS3 - Per Mile per month			OH3, OH3MS	1L5NM	2.63										
	Interoffice Channel - Dedicated Transport - DS3 - Facility Termination per month			OH3, OH3MS	1L5NM	349.42	320.16	86.24	66.71	52.76						
LOCAL CHANNEL - DEDICATED TRANSPORT																
	Local Channel - Dedicated - 2-Wire Voice Grade per month			OHM	TEFV2	7.91	120.95	53.24	46.35	13.35						
	Local Channel - Dedicated - 4-Wire Voice Grade per month			OHM	TEFV4	8.90	125.50	54.38	46.35	13.35						
	Local Channel - Dedicated - DS1 per month			OH1	TEFHG	22.82	149.31	111.09	40.32	26.09						
	Local Channel - Dedicated - DS3 Facility Termination per month			OH3	TEFHJ	150.05	444.58	145.04	112.80	75.81						
LOCAL INTERCONNECTION MID-SPAN MEET																
	Local Channel - Dedicated - DS1 per month			OH1MS	TEFHG	0.00	0.00									
	Local Channel - Dedicated - DS3 per month			OH3MS	TEFHJ	0.00	0.00									
MULTIPLEXERS																
	Channelization - DS1 to DS0 Channel System			OH1, OH1MS	SATN1	71.23	105.57	41.545	23.73	4.19						
	DS3 to DS1 Channel System per month			OH3, OH3MS	SATNS	124.39	224.255	71.76	39.965	31.035						
	DS3 Interface Unit (DS1 COCI) per month			OH1, OH1MS	SATCO	7.50	15.79	11.375	6.60	6.60						
Notes: If no rate is identified in the contract, the rates, terms, and conditions for the specific service or function will be as set forth in applicable BellSouth tariff.																
SIGNALING (CCS7)																
NOTE:"bk" beside a rate indicates that the parties have agreed to bill and keep for that element pursuant to the terms and conditions in Attachment 3.																
	CCS7 Signaling Connection, Per 56Kbps Facility A-Link DS1			UDB	TPP6A	8.93	34.74	34.74	16.90	16.90						

LOCAL INTERCONNECTION - Georgia														Attachment: 3 Exh A			
CATEGORY		RATE ELEMENTS	Interim	Zone	BCS	USOC		RATES($)				Svc Order Submitted Elec per LSR	Svc Order Submitted Manually per LSR	Incremental Charge - Manual Svc Order vs. Electronic-1st	Incremental Charge - Manual Svc Order vs. Electronic-Add'l	Incremental Charge - Manual Svc Order vs. Electronic-Disc 1st	Incremental Charge - Manual Svc Order vs. Electronic-Disc Add'l
							Rec	Nonrecurring		Nonrecurring Disconnect		OSS Rates($)					
								First	Add'l	First	Add'l	SOMEC	SOMAN	SOMAN	SOMAN	SOMAN	SOMAN
		CCS7 Signaling Connection, Per 56Kbps Facility A-Link DS3			UDB	TPP9A	8.93	34.74	34.74	16.90	16.90						
		CCS7 Signaling Connection, Per 56Kbps Facility B-Link DS1			UDB	TPP6B	8.93	34.74	34.74	16.90	16.90						
		CCS7 Signaling Connection, Per 56Kbps Facility B-Link DS3			UDB	TPP9B	8.93	34.74	34.74	16.90	16.90						
		CCS7 Signaling Termination, Per STP Port			UDB	PT8SX	111.30										
		CCS7 Signaling Usage, Per Call Setup Message					.0000134bk										
		CCS7 Signaling Usage, Per TCAP Message					0.0000536										
		CCS7 Signaling Usage, Per ISUP Message (same as E.3.3)					.0000134bk										
		CCS7 Signaling Usage Surrogate, per link			UDB	STU56	921.93bk										
		CCS7 Signaling Point Code, Establishment or Change, per STP affected			UDB	CCAPO		28.12	28.12	33.29	33.29						
		CCS7 Signaling Connection, Switched access service, interface groups, transmissiom paths 6 DS1 level path with bit stream signaling			UDB	TPP6X	8.93	34.74	34.74	16.90	16.90						
		CCS7 Signaling Connection, Switched access service, interface groups, transmissiom paths 9 DS3 level path with bit stream signaling			UDB	TPP9X	8.93	34.74	34.74	16.90	16.90						

CATEGORY	RATE ELEMENTS	Interim	Zone	BCS	USOC	RATES($) Rec	Nonrecurring First	Nonrecurring Add'l	Nonrecurring Disconnect First	Nonrecurring Disconnect Add'l	Svc Order Submitted Elec per LSR	Svc Order Submitted Manually per LSR	Incremental Charge - Manual Svc Order vs. Electronic-1st	Incremental Charge - Manual Svc Order vs. Electronic-Add'l	Incremental Charge - Manual Svc Order vs. Electronic-Disc 1st	Incremental Charge - Manual Svc Order vs. Electronic-Disc Add'l
											OSS Rates($)					
											SOMEC	SOMAN	SOMAN	SOMAN	SOMAN	SOMAN
LOCAL INTERCONNECTION (CALL TRANSPORT AND TERMINATION)																
	NOTE: "bk" beside a rate indicates that the Parties have agreed to bill and keep for that element pursuant to the terms and conditions in Attachment 3.															
	TANDEM SWITCHING															
	Tandem Switching Function Per MOU					0.0006772bk										
	Multiple Tandem Switching, per MOU (applies to intial tandem only)					0.0006772										
	Tandem Intermediary Charge, per MOU*					0.0025										
	*** This charge is applicable only to transit traffic and is applied in addition to applicable switching and/or interconnection charges.**															
	TRUNK CHARGE															
	Installation Trunk Side Service - per DS0			OHD	TPP6X		21.58	8.13								
	Installation Trunk Side Service - per DS0			OHD	TPP9X		21.58	8.13								
	Dedicated End Office Trunk Port Service-per DS0**			OHD	TDEOP	0.00										
	Dedicated End Office Trunk Port Service-per DS1**			OH1 OH1MS	TDE1P	0.00										
	Dedicated Tandem Trunk Port Service-per DS0**			OHD	TDWOP	0.00										
	Dedicated Tandem Trunk Port Service-per DS1**			OH1 OH1MS	TDW1P	0.00										
	**** This rate element is recovered on a per MOU basis and is included in the End Office Switching and Tandem Switching, per MOU rate elements**															
	COMMON TRANSPORT (Shared)															
	Common Transport - Per Mile, Per MOU					0.0000030bk										
	Common Transport - Facilities Termination Per MOU					0.0007466bk										
LOCAL INTERCONNECTION (DEDICATED TRANSPORT)																
	INTEROFFICE CHANNEL - DEDICATED TRANSPORT															
	Interoffice Channel - Dedicated Transport - 2-Wire Voice Grade - Per Mile per month			OHM	1L5NF	0.01										
	Interoffice Channel - Dedicated Transport- 2- Wire Voice Grade - Facility Termination per month			OHM	1L5NF	29.11	47.34	31.78	22.77	8.75						
	Interoffice Channel - Dedicated Transport - 56 kbps - per mile per month			OHM	1L5NK	0.0115										
	Interoffice Channel - Dedicated Transport - 56 kbps - Facility Termination per month			OHM	1L5NK	20.97	47.35	31.78	22.77	8.75						
	Interoffice Channel - Dedicated Transport - 64 kbps - per mile per month			OHM	1L5NK	0.0115										
	Interoffice Channel - Dedicated Transport - 64 kbps - Facility Termination per month			OHM	1L5NK	20.97	47.35	31.78	22.77	8.75						
	Interoffice Channel - Dedicated Channel - DS1 - Per Mile per month			OH1, OH1MS	1L5NL	0.23										
	Interoffice Channel - Dedicated Tranport - DS1 - Facility Termination per month			OH1, OH1MS	1L5NL	96.04	105.52	98.46	23.09	20.49						
	Interoffice Channel - Dedicated Transport - DS3 - Per Mile per month			OH3, OH3MS	1L5NM	4.97										
	Interoffice Channel - Dedicated Transport - DS3 - Facility Termination per month			OH3, OH3MS	1L5NM	1,175.15	335.40	219.24	89.57	87.75						
	LOCAL CHANNEL - DEDICATED TRANSPORT															
	Local Channel - Dedicated - 2-Wire Voice Grade per month			OHM	TEFV2	18.57	265.78	46.96	46.79	4.98						
	Local Channel - Dedicated - 4-Wire Voice Grade per month			OHM	TEFV4	19.86	266.48	47.65	47.54	5.73						
	Local Channel - Dedicated - DS1 per month			OH1	TEFHG	40.46	209.60	176.51	30.21	21.07						
	Local Channel - Dedicated - DS3 Facility Termination per month			OH3	TEFHJ	576.05	551.38	338.08	173.00	120.42						
	LOCAL INTERCONNECTION MID-SPAN MEET															
	Local Channel - Dedicated - DS1 per month			OH1MS	TEFHG	0.00	0.00									
	Local Channel - Dedicated - DS3 per month			OH3MS	TEFHJ	0.00	0.00									
	MULTIPLEXERS															
	Channelization - DS1 to DS0 Channel System			OH1, OH1MS	SATN1	113.33	101.40	71.60	13.79	13.04						
	DS3 to DS1 Channel System per month			OH3, OH3MS	SATNS	158.20	199.23	118.62	50.16	48.59						
	DS3 Interface Unit (DS1 COCI) per month			OH1, OH1MS	SATCO	11.80	10.07	7.08								
SIGNALING (CCS7)																
	NOTE:"bk" beside a rate indicates that the parties have agreed to bill and keep for that element pursuant to the terms and conditions in Attachment 3.															
	CCS7 Signaling Connection, Per 56Kbps Facility A-Link DS1			UDB	TPP6A	20.71	43.56	43.56	22.45	22.45						
	CCS7 Signaling Connection, Per 56Kbps Facility A-Link DS3			UDB	TPP9A	20.71	43.56	43.56	22.45	22.45						

CATEGORY		RATE ELEMENTS	Interim	Zone	BCS	USOC	RATES($)					Svc Order Submitted Elec per LSR	Svc Order Submitted Manually per LSR	Incremental Charge - Manual Svc Order vs. Electronic-1st	Incremental Charge - Manual Svc Order vs. Electronic-Add'l	Incremental Charge - Manual Svc Order vs. Electronic-Disc 1st	Incremental Charge - Manual Svc Order vs. Electronic-Disc Add'l
							Rec	Nonrecurring		Nonrecurring Disconnect		OSS Rates($)					
								First	Add'l	First	Add'l	SOMEC	SOMAN	SOMAN	SOMAN	SOMAN	SOMAN
		CCS7 Signaling Connection, Per 56Kbps Facility B-Link DS1			UDB	TPP6B	20.71	43.56	43.56	22.45	22.45						
		CCS7 Signaling Connection, Per 56Kbps Facility B-Link DS3			UDB	TPP9B	20.71	43.56	43.56	22.45	22.45						
		CCS7 Signaling Termination, Per STP Port			UDB	PT8SX	151.39										
		CCS7 Signaling Usage, Per Call Setup Message					0.0000164bk										
		CCS7 Signaling Usage, Per TCAP Message					0.0000656bk										
		CCS7 Signaling Usage, Per ISUP Message					0.0000164bk										
		CCS7 Signaling Usage Surrogate, per link per LATA			UDB	STU56	751.08bk										
		CCS7 Signaling Point Code, per Originating Point Code Establishment or Change, per STP affected			UDB	CCAPO		46.02	46.02	56.43	56.43						
		CCS7 Signaling Point Code, per Destination Point Code Establishment or Change, Per Stp Affected			UDB	CCAPD		46.02	46.02	56.43	56.43						
		CCS7 Signaling Connection, Switched access service, interface groups, transmissiom paths 6 DS1 level path with bit stream signaling			UDB	TPP6X	20.71	43.56	43.56	22.45	22.45						
		CCS7 Signaling Connection, Switched access service, interface groups, transmissiom paths 9 DS3 level path with bit stream signaling			UDB	TPP9X	20.71	43.56	43.56	22.45	22.45						

Notes: If no rate is identified in the contract, the rates, terms, and conditions for the specific service or function will be as set forth in applicable BellSouth tariff.

LOCAL INTERCONNECTION - Louisiana														Attachment: 3 Exh: A			
CATEGORY	RATE ELEMENTS	Interim	Zone	BCS	USOC	RATES($)					Svc Order Submitted Elec per LSR	Svc Order Submitted Manually per LSR	Incremental Charge - Manual Svc Order vs. Electronic-1st	Incremental Charge - Manual Svc Order vs. Electronic-Add'l	Incremental Charge - Manual Svc Order vs. Electronic-Disc 1st	Incremental Charge - Manual Svc Order vs. Electronic-Disc Add'l
						Rec	Nonrecurring		Nonrecurring Disconnect		OSS Rates($)					
							First	Add'l	First	Add'l	SOMEC	SOMAN	SOMAN	SOMAN	SOMAN	SOMAN
LOCAL INTERCONNECTION (CALL TRANSPORT AND TERMINATION)																
NOTE: "bk" beside a rate indicates that the Parties have agreed to bill and keep for that element pursuant to the terms and conditions in Attachment 3.																
TANDEM SWITCHING																
	Tandem Switching Function Per MOU					0.0005507bk										
	Multiple Tandem Switching, per MOU (applies to intial tandem only)					0.0005507										
	Tandem Intermediary Charge, per MOU*					0.0025										
*** This charge is applicable only to transit traffic and is applied in addition to applicable switching and/or interconnection charges.**																
TRUNK CHARGE																
	Installation Trunk Side Service - per DS0			OHD	TPP6X		21.64	8.15								
	Installation Trunk Side Service - per DS0			OHD	TPP9X		21.64	8.15								
	Dedicated End Office Trunk Port Service-per DS0**			OHD	TDEOP	0.00										
	Dedicated End Office Trunk Port Service-per DS1**			OH1 OH1MS	TDE1P	0.00										
	Dedicated Tandem Trunk Port Service-per DS0**			OHD	TDWOP	0.00										
	Dedicated Tandem Trunk Port Service-per DS1**			OH1 OH1MS	TDW1P	0.00										
**** This rate element is recovered on a per MOU basis and is included in the End Office Switching and Tandem Switching, per MOU rate elements**																
COMMON TRANSPORT (Shared)																
	Common Transport - Per Mile, Per MOU					0.0000032bk										
	Common Transport - Facilities Termination Per MOU					0.0003748bk										
LOCAL INTERCONNECTION (DEDICATED TRANSPORT)																
INTEROFFICE CHANNEL - DEDICATED TRANSPORT																
	Interoffice Channel - Dedicated Transport - 2-Wire Voice Grade - Per Mile per month			OHM	1L5NF	0.013										
	Interoffice Channel - Dedicated Transport- 2- Wire Voice Grade - Facility Termination per month			OHM	1L5NF	22.60	39.36	26.62								
	Interoffice Channel - Dedicated Transport - 56 kbps - per mile per month			OHM	1L5NK	0.013										
	Interoffice Channel - Dedicated Transport - 56 kbps - Facility Termination per month			OHM	1L5NK	15.61	39.37	26.62								
	Interoffice Channel - Dedicated Transport - 64 kbps - per mile per month			OHM	1L5NK	0.013										
	Interoffice Channel - Dedicated Transport - 64 kbps - Facility Termination per month			OHM	1L5NK	15.61	39.37	26.62								
	Interoffice Channel - Dedicated Channel - DS1 - Per Mile per month			OH1, OH1MS	1L5NL	0.2652										
	Interoffice Channel - Dedicated Tranport - DS1 - Facility Termination per month			OH1, OH1MS	1L5NL	70.47	86.69	79.44								
	Interoffice Channel - Dedicated Transport - DS3 - Per Mile per month			OH3, OH3MS	1L5NM	6.04										
	Interoffice Channel - Dedicated Transport - DS3 - Facility Termination per month			OH3, OH3MS	1L5NM	850.45	270.69	158.05								
LOCAL CHANNEL - DEDICATED TRANSPORT																
	Local Channel - Dedicated - 2-Wire Voice Grade per month			OHM	TEFV2	18.32	187.51	32.21								
	Local Channel - Dedicated - 4-Wire Voice Grade per month			OHM	TEFV4	19.41	187.94	32.63								
	Local Channel - Dedicated - DS1 per month			OH1	TEFHG	39.18	172.34	149.27								
	Local Channel - Dedicated - DS3 Facility Termination per month			OH3	TEFHJ	469.44	438.46	256.30								
LOCAL INTERCONNECTION MID-SPAN MEET																
	Local Channel - Dedicated - DS1 per month			OH1MS	TEFHG	0.00	0.00									
	Local Channel - Dedicated - DS3 per month			OH3MS	TEFHJ	0.00	0.00									
MULTIPLEXERS																
	Channelization - DS1 to DS0 Channel System			OH1, OH1MS	SATN1	105.09	88.41	60.76								
	DS3 to DS1 Channel System per month			OH3, OH3MS	SATNS	201.48	172.99	91.25								
	DS3 Interface Unit (DS1 COCI) per month			OH1, OH1MS	SATCO	11.78	6.39	4.58								
SIGNALING (CCS7)																
NOTE:"bk" beside a rate indicates that the parties have agreed to bill and keep for that element pursuant to the terms and conditions in Attachment 3.																
	CCS7 Signaling Termination, Per STP Port			UDB	PT8SX	147.60										
	CCS7 Signaling Usage, Per TCAP Message					0.000064bk										

LOCAL INTERCONNECTION - Louisiana														Attachment: 3 Exh: A			
CATEGORY		RATE ELEMENTS	Interim	Zone	BCS	USOC	RATES($)					Svc Order Submitted Elec per LSR	Svc Order Submitted Manually per LSR	Incremental Charge - Manual Svc Order vs. Electronic-1st	Incremental Charge - Manual Svc Order vs. Electronic-Add'l	Incremental Charge - Manual Svc Order vs. Electronic-Disc 1st	Incremental Charge - Manual Svc Order vs. Electronic-Disc Add'l
							Rec	Nonrecurring		Nonrecurring Disconnect		OSS Rates($)					
								First	Add'l	First	Add'l	SOMEC	SOMAN	SOMAN	SOMAN	SOMAN	SOMAN
		CCS7 Signaling Connection, Per DS1 level link (A link)			UDB	TPP6A	15.77	34.50	34.50								
		CCS7 Signaling Connection, Per DS3 level link (A link)			UDB	TPP9A	15.77	34.50	34.50								
		CCS7 Signaling Connection, Per DS1 level link (B link) (also known as D link)			UDB	TPP6B	15.77	34.50	34.50								
		CCS7 Signaling Connection, Per DS3 level link (B link) (also known as D link)			UDB	TPP9B	15.77	34.50	34.50								
		CCS7 Signaling Usage, Per ISUP Message					0.000016bk										
		CCS7 Signaling Usage Surrogate, per link per LATA			UDB	STU56	732.1bk										
		CCS7 Signaling Point Code, per Originating Point Code Establishment or Change, per STP affected			UDB	CCAPO		28.17	28.17								
		CCS7 Signaling Point Code, per Destination Point Code Establishment or Change, Per Stp Affected			UDB	CCAPD		28.17	28.17								
		CCS7 Signaling Connection, Switched access service, interface groups, transmissiom paths 6 DS1 level path with bit stream signaling			UDB	TPP6X	15.77	34.50	34.50								
		CCS7 Signaling Connection, Switched access service, interface groups, transmissiom paths 9 DS3 level path with bit stream signaling			UDB	TPP9X	15.77	34.50	34.50								
	Notes: If no rate is identified in the contract, the rates, terms, and conditions for the specific service or function will be as set forth in applicable BellSouth tariff.																

CATEGORY	RATE ELEMENTS	Interim	Zone	BCS	USOC	RATES($) Rec	Nonrecurring First	Nonrecurring Add'l	Nonrecurring Disconnect First	Nonrecurring Disconnect Add'l	Svc Order Submitted Elec per LSR	Svc Order Submitted Manually per LSR	Incremental Charge - Manual Svc Order vs. Electronic-1st	Incremental Charge - Manual Svc Order vs. Electronic-Add'l	Incremental Charge - Manual Svc Order vs. Electronic-Disc 1st	Incremental Charge - Manual Svc Order vs. Electronic-Disc Add'l
											OSS Rates($)					
											SOMEC	SOMAN	SOMAN	SOMAN	SOMAN	SOMAN
LOCAL INTERCONNECTION (CALL TRANSPORT AND TERMINATION)																
	NOTE: "bk" beside a rate indicates that the Parties have agreed to bill and keep for that element pursuant to the terms and conditions in Attachment 3.															
	TANDEM SWITCHING															
	Tandem Switching Function Per MOU					0.0005379bk										
	Multiple Tandem Switching, per MOU (applies to intial tandem only)					0.0005379										
	Tandem Intermediary Charge, per MOU*					0.0025										
	*** This charge is applicable only to transit traffic and is applied in addition to applicable switching and/or interconnection charges.**															
	TRUNK CHARGE															
	Installation Trunk Side Service - per DS0			OHD	TPP6X		21.58	8.13								
	Installation Trunk Side Service - per DS0			OHD	TPP9X		21.58	8.13								
	Dedicated End Office Trunk Port Service-per DS0**			OHD	TDEOP	0.00										
	Dedicated End Office Trunk Port Service-per DS1**			OH1 OH1MS	TDE1P	0.00										
	Dedicated Tandem Trunk Port Service-per DS0**			OHD	TDWOP	0.00										
	Dedicated Tandem Trunk Port Service-per DS1**			OH1 OH1MS	TDW1P	0.00										
	**** This rate element is recovered on a per MOU basis and is included in the End Office Switching and Tandem Switching, per MOU rate elements**															
	COMMON TRANSPORT (Shared)															
	Common Transport - Per Mile, Per MOU					0.0000026bk										
	Common Transport - Facilities Termination Per MOU					0.0004541bk										
LOCAL INTERCONNECTION (DEDICATED TRANSPORT)																
	INTEROFFICE CHANNEL - DEDICATED TRANSPORT															
	Interoffice Channel - Dedicated Transport - 2-Wire Voice Grade - Per Mile per month			OHM	1L5NF	0.0098										
	Interoffice Channel - Dedicated Transport- 2- Wire Voice Grade - Facility Termination per month			OHM	1L5NF	22.52	40.77	27.57	17.26	7.11						
	Interoffice Channel - Dedicated Transport - 56 kbps - per mile per month			OHM	1L5NK	0.0098										
	Interoffice Channel - Dedicated Transport - 56 kbps - Facility Termination per month			OHM	1L5NK	15.68	40.78	27.57	17.26	7.11						
	Interoffice Channel - Dedicated Transport - 64 kbps - per mile per month			OHM	1L5NK	0.0098										
	Interoffice Channel - Dedicated Transport - 64 kbps - Facility Termination per month			OHM	1L5NK	15.68	40.78	27.57	17.26	7.11						
	Interoffice Channel - Dedicated Channel - DS1 - Per Mile per month			OH1, OH1MS	1L5NL	0.201										
	Interoffice Channel - Dedicated Tranport - DS1 - Facility Termination per month			OH1, OH1MS	1L5NL	57.33	89.79	82.28	16.86	14.90						
	Interoffice Channel - Dedicated Transport - DS3 - Per Mile per month			OH3, OH3MS	1L5NM	4.76										
	Interoffice Channel - Dedicated Transport - DS3 - Facility Termination per month			OH3, OH3MS	1L5NM	641.90	280.37	163.70	62.08	60.29						
	LOCAL CHANNEL - DEDICATED TRANSPORT															
	Local Channel - Dedicated - 2-Wire Voice Grade per month			OHM	TEFV2	14.91	194.22	33.36	37.79	3.30						
	Local Channel - Dedicated - 4-Wire Voice Grade per month			OHM	TEFV4	15.99	194.66	33.80	38.27	3.78						
	Local Channel - Dedicated - DS1 per month			OH1	TEFHG	36.83	178.50	154.61	22.89	15.74						
	Local Channel - Dedicated - DS3 Facility Termination per month			OH3	TEFHJ	413.87	454.13	264.47	123.23	86.19						
	LOCAL INTERCONNECTION MID-SPAN MEET															
	Local Channel - Dedicated - DS1 per month			OH1MS	TEFHG	0.00	0.00									
	Local Channel - Dedicated - DS3 per month			OH3MS	TEFHJ	0.00	0.00									
	MULTIPLEXERS															
	Channelization - DS1 to DS0 Channel System			OH1, OH1MS	SATN1	102.85	91.57	62.94	10.87	10.10						
	DS3 to DS1 Channel System per month			OH3, OH3MS	SATNS	170.63	179.17	94.52	34.30	32.82						
	DS3 Interface Unit (DS1 COCI) per month			OH1, OH1MS	SATCO	12.96	6.62	4.74								
SIGNALING (CCS7)																
	NOTE:"bk" beside a rate indicates that the parties have agreed to bill and keep for that element pursuant to the terms and conditions in Attachment 3.															
	CCS7 Signaling Termination, Per STP Port			UDB	PT8SX	132.21										
	CCS7 Signaling Usage, Per TCAP Message					0.0000597bk										

LOCAL INTERCONNECTION - Mississippi														Attachment: 3 Exh: A			
CATEGORY		RATE ELEMENTS	Interim	Zone	BCS	USOC	RATES($)					Svc Order Submitted Elec per LSR	Svc Order Submitted Manually per LSR	Incremental Charge - Manual Svc Order vs. Electronic-1st	Incremental Charge - Manual Svc Order vs. Electronic-Add'l	Incremental Charge - Manual Svc Order vs. Electronic-Disc 1st	Incremental Charge - Manual Svc Order vs. Electronic-Disc Add'l
							Rec	Nonrecurring		Nonrecurring Disconnect		OSS Rates($)					
								First	Add'l	First	Add'l	SOMEC	SOMAN	SOMAN	SOMAN	SOMAN	SOMAN
		CCS7 Signaling Connection, Per DS1 level link (A link)			UDB	TPP6A	16.55	35.74	35.74	16.53	16.53						
		CCS7 Signaling Connection, Per DS3 level link (A link)			UDB	TPP9A	16.55	35.74	35.74	16.53	16.53						
		CCS7 Signaling Connection, Per DS1 level link (B link) (also known as D link)			UDB	TPP6B	16.55	35.74	35.74	16.53	16.53						
		CCS7 Signaling Connection, Per DS3 level link (B link) (also known as D link)			UDB	TPP9B	16.55	35.74	35.74	16.53	16.53						
		CCS7 Signaling Usage, Per ISUP Message					0.0000149bk										
		CCS7 Signaling Usage Surrogate, per link per LATA			UDB	STU56	683.55bk										
		CCS7 Signaling Point Code, per Originating Point Code Establishment or Change, per STP affected			UDB	CCAPO		29.18	29.18	35.78	35.78						
		CCS7 Signaling Point Code, per Destination Point Code Establishment or Change, Per Stp Affected			UDB	CCAPD											
		CCS7 Signaling Connection, Switched access service, interface groups, transmissiom paths 6 DS1 level path with bit stream signaling			UDB	TPP6X	16.55	35.74	35.74	16.53	16.53						
		CCS7 Signaling Connection, Switched access service, interface groups, transmissiom paths 9 DS3 level path with bit stream signaling			UDB	TPP9X	16.55	35.74	35.74	16.53	16.53						
	Notes: If no rate is identified in the contract, the rates, terms, and conditions for the specific service or function will be as set forth in applicable BellSouth tariff.																

LOCAL INTERCONNECTION - North Carolina														Attachment: 3 Exh A			
CATEGORY	RATE ELEMENTS	Interim	Zone	BCS	USOC		RATES($)				Svc Order Submitted Elec per LSR	Svc Order Submitted Manually per LSR	Incremental Charge - Manual Svc Order vs. Electronic-1st	Incremental Charge - Manual Svc Order vs. Electronic-Add'l	Incremental Charge - Manual Svc Order vs. Electronic-Disc 1st	Incremental Charge - Manual Svc Order vs. Electronic-Disc Add'l
						Rec	Nonrecurring		Nonrecurring Disconnect		OSS Rates($)					
							First	Add'l	First	Add'l	SOMEC	SOMAN	SOMAN	SOMAN	SOMAN	SOMAN
LOCAL INTERCONNECTION (CALL TRANSPORT AND TERMINATION)																
	NOTE: "bk" beside a rate indicates that the Parties have agreed to bill and keep for that element pursuant to the terms and conditions in Attachment 3.															
	TANDEM SWITCHING															
	Tandem Switching Function Per MOU					0.0004788bk										
	Multiple Tandem Switching, per MOU (applies to intial tandem only)					0.0004788										
	Tandem Intermediary Charge, per MOU*					0.0025										
	*** This charge is applicable only to transit traffic and is applied in addition to applicable switching and/or interconnection charges.**															
	TRUNK CHARGE															
	Installation Trunk Side Service - per DS0			OHD	TPP6X		21.55	8.12								
	Installation Trunk Side Service - per DS0			OHD	TPP9X		21.55	8.12								
	Dedicated End Office Trunk Port Service-per DS0**			OHD	TDEOP	0.00										
	Dedicated End Office Trunk Port Service-per DS1**			OH1 OH1MS	TDE1P	0.00										
	Dedicated Tandem Trunk Port Service-per DS0**			OHD	TDWOP	0.00										
	Dedicated Tandem Trunk Port Service-per DS1**			OH1 OH1MS	TDW1P	0.00										
	**** This rate element is recovered on a per MOU basis and is included in the End Office Switching and Tandem Switching, per MOU rate elements**															
	COMMON TRANSPORT (Shared)															
	Common Transport - Per Mile, Per MOU					0.0000023bk										
	Common Transport - Facilities Termination Per MOU					0.0001676bk										
LOCAL INTERCONNECTION (DEDICATED TRANSPORT)																
	INTEROFFICE CHANNEL - DEDICATED TRANSPORT															
	Interoffice Channel - Dedicated Transport - 2-Wire Voice Grade - Per Mile per month			OHM	1L5NF	0.0095										
	Interoffice Channel - Dedicated Transport- 2- Wire Voice Grade - Facility Termination per month			OHM	1L5NF	12.12	39.36	26.62								
	Interoffice Channel - Dedicated Transport - 56 kbps - per mile per month			OHM	1L5NK	0.0095										
	Interoffice Channel - Dedicated Transport - 56 kbps - Facility Termination per month			OHM	1L5NK	7.47	39.37	26.62								
	Interoffice Channel - Dedicated Transport - 64 kbps - per mile per month			OHM	1L5NK	0.0095										
	Interoffice Channel - Dedicated Transport - 64 kbps - Facility Termination per month			OHM	1L5NK	7.47	39.37	26.62								
	Interoffice Channel - Dedicated Channel - DS1 - Per Mile per month			OH1, OH1MS	1L5NL	0.1938										
	Interoffice Channel - Dedicated Tranport - DS1 - Facility Termination per month			OH1, OH1MS	1L5NL	31.19	86.69	79.44								
	Interoffice Channel - Dedicated Transport - DS3 - Per Mile per month			OH3, OH3MS	1L5NM	4.44										
	Interoffice Channel - Dedicated Transport - DS3 - Facility Termination per month			OH3, OH3MS	1L5NM	329.91	270.69	158.05								
	LOCAL CHANNEL - DEDICATED TRANSPORT															
	Local Channel - Dedicated - 2-Wire Voice Grade per month			OHM	TEFV2	6.29	187.51	32.21								
	Local Channel - Dedicated - 4-Wire Voice Grade per month			OHM	TEFV4	7.08	187.94	32.63								
	Local Channel - Dedicated - DS1 per month			OH1	TEFHG	22.13	172.34	149.27								
	Local Channel - Dedicated - DS3 Facility Termination per month			OH3	TEFHJ	82.89	438.46	256.30								
	LOCAL INTERCONNECTION MID-SPAN MEET															
	Local Channel - Dedicated - DS1 per month			OH1MS	TEFHG	0.00	0.00									
	Local Channel - Dedicated - DS3 per month			OH3MS	TEFHJ	0.00	0.00									
	MULTIPLEXERS															
	Channelization - DS1 to DS0 Channel System			OH1, OH1MS	SATN1	146.69	197.78	140.06								
	DS3 to DS1 Channel System per month			OH3, OH3MS	SATNS	233.10	403.97	234.40								
	DS3 Interface Unit (DS1 COCI) per month			OH1, OH1MS	SATCO	16.07	13.09	9.38								
	Notes: If no rate is identified in the contract, the rates, terms, and conditions for the specific service or function will be as set forth in applicable BellSouth tariff.															
SIGNALING (CCS7)																
	NOTE:"bk" beside a rate indicates that the parties have agreed to bill and keep for that element pursuant to the terms and conditions in Attachment 3.															
	CCS7 Signaling Connection, Per DS1 level link (A link)			UDB	TPP6A	8.13	34.50	34.50								

LOCAL INTERCONNECTION - North Carolina														Attachment: 3 Exh A			
CATEGORY		RATE ELEMENTS	Interim	Zone	BCS	USOC		RATES($)				Svc Order Submitted Elec per LSR	Svc Order Submitted Manually per LSR	Incremental Charge - Manual Svc Order vs. Electronic-1st	Incremental Charge - Manual Svc Order vs. Electronic-Add'l	Incremental Charge - Manual Svc Order vs. Electronic-Disc 1st	Incremental Charge - Manual Svc Order vs. Electronic-Disc Add'l
							Rec	Nonrecurring		Nonrecurring Disconnect		OSS Rates($)					
								First	Add'l	First	Add'l	SOMEC	SOMAN	SOMAN	SOMAN	SOMAN	SOMAN
		CCS7 Signaling Connection, Per DS3 level link (A link)			UDB	TPP9A	8.13	34.50	34.50								
		CCS7 Signaling Connection, Per DS1 level link (B link) (also known as D link)			UDB	TPP6B	8.13	34.50	34.50								
		CCS7 Signaling Connection, Per DS3 level link (B link) (also known as D link)			UDB	TPP9B	8.13	34.50	34.50								
		CCS7 Signaling Termination, Per STP Port			UDB	PT8SX	108.19										
		CCS7 Signaling Usage, Per ISUP Message					0.0000094bk										
		CCS7 Signaling Usage, Per TCAP Message					0.0000374										
		CCS7 Signaling Usage Surrogate, per link per LATA			UDB	STU56	644.04bk										
		CCS7 Signaling Point Code, per Originating Point Code Establishment or Change, per STP affected			UDB	CCAPO		55.77	55.77								
		CCS7 Signaling Point Code, per Destination Point Code Establishment or Change, Per Stp Affected			UDB	CCAPD		8.00	8.00								
		CCS7 Signaling Connection, Switched access service, interface groups, transmissiom paths 6 DS1 level path with bit stream signaling			UDB	TPP6X	8.13	34.50	34.50								
		CCS7 Signaling Connection, Switched access service, interface groups, transmissiom paths 9 DS3 level path with bit stream signaling			UDB	TPP9X	8.13	34.50	34.50								

LOCAL INTERCONNECTION - South Carolina														Attachment: 3 Exh A			
CATEGORY	RATE ELEMENTS	Interim	Zone	BCS	USOC		RATES($)				Svc Order Submitted Elec per LSR	Svc Order Submitted Manually per LSR	Incremental Charge - Manual Svc Order vs. Electronic-1st	Incremental Charge - Manual Svc Order vs. Electronic-Add'l	Incremental Charge - Manual Svc Order vs. Electronic-Disc 1st	Incremental Charge - Manual Svc Order vs. Electronic-Disc Add'l
						Rec	Nonrecurring		Nonrecurring Disconnect		OSS Rates($)					
							First	Add'l	First	Add'l	SOMEC	SOMAN	SOMAN	SOMAN	SOMAN	SOMAN
LOCAL INTERCONNECTION (CALL TRANSPORT AND TERMINATION)																
NOTE: "bk" beside a rate indicates that the Parties have agreed to bill and keep for that element pursuant to the terms and conditions in Attachment 3.																
TANDEM SWITCHING																
	Tandem Switching Function Per MOU					0.0007360bk										
	Multiple Tandem Switching, per MOU (applies to intial tandem only)					0.000736										
	Tandem Intermediary Charge, per MOU*					0.0025										
*** This charge is applicable only to transit traffic and is applied in addition to applicable switching and/or interconnection charges.**																
TRUNK CHARGE																
	Installation Trunk Side Service - per DS0			OHD	TPP6X		21.65	8.16								
	Installation Trunk Side Service - per DS0			OHD	TPP9X		21.65	8.16								
	Dedicated End Office Trunk Port Service-per DS0**			OHD	TDEOP	0.00										
	Dedicated End Office Trunk Port Service-per DS1**			OH1 OH1MS	TDE1P	0.00										
	Dedicated Tandem Trunk Port Service-per DS0**			OHD	TDWOP	0.00										
	Dedicated Tandem Trunk Port Service-per DS1**			OH1 OH1MS	TDW1P	0.00										
**** This rate element is recovered on a per MOU basis and is included in the End Office Switching and Tandem Switching, per MOU rate elements**																
COMMON TRANSPORT (Shared)																
	Common Transport - Per Mile, Per MOU					0.0000045bk										
	Common Transport - Facilities Termination Per MOU					0.0004095bk										
LOCAL INTERCONNECTION (DEDICATED TRANSPORT)																
INTEROFFICE CHANNEL - DEDICATED TRANSPORT																
	Interoffice Channel - Dedicated Transport - 2-Wire Voice Grade - Per Mile per month			OHM	1L5NF	0.0167										
	Interoffice Channel - Dedicated Transport- 2- Wire Voice Grade - Facility Termination per month			OHM	1L5NF	24.30	40.63	27.47	16.77	6.91						
	Interoffice Channel - Dedicated Transport - 56 kbps - per mile per month			OHM	1L5NK	0.0167										
	Interoffice Channel - Dedicated Transport - 56 kbps - Facility Termination per month			OHM	1L5NK	16.76	40.63	27.47	16.77	6.91						
	Interoffice Channel - Dedicated Transport - 64 kbps - per mile per month			OHM	1L5NK	0.0167										
	Interoffice Channel - Dedicated Transport - 64 kbps - Facility Termination per month			OHM	1L5NK	16.76	40.63	27.47	16.77	6.91						
	Interoffice Channel - Dedicated Channel - DS1 - Per Mile per month			OH1, OH1MS	1L5NL	0.3415										
	Interoffice Channel - Dedicated Tranport - DS1 - Facility Termination per month			OH1, OH1MS	1L5NL	77.14	89.47	81.99	16.39	14.48						
	Interoffice Channel - Dedicated Transport - DS3 - Per Mile per month			OH3, OH3MS	1L5NM	8.02										
	Interoffice Channel - Dedicated Transport - DS3 - Facility Termination per month			OH3, OH3MS	1L5NM	880.65	279.37	163.12	60.33	58.59						
LOCAL CHANNEL - DEDICATED TRANSPORT																
	Local Channel - Dedicated - 2-Wire Voice Grade per month			OHM	TEFV2	15.33	193.53	33.24	36.72	3.21						
	Local Channel - Dedicated - 4-Wire Voice Grade per month			OHM	TEFV4	16.54	193.97	33.68	37.19	3.68						
	Local Channel - Dedicated - DS1 per month			OH1	TEFHG	42.62	177.87	154.06	22.24	15.30						
	Local Channel - Dedicated - DS3 Facility Termination per month			OH3	TEFHJ	446.00	452.52	264.53	119.75	83.77						
LOCAL INTERCONNECTION MID-SPAN MEET																
	Local Channel - Dedicated - DS1 per month			OH1MS	TEFHG	0.00	0.00									
	Local Channel - Dedicated - DS3 per month			OH3MS	TEFHJ	0.00	0.00									
MULTIPLEXERS																
	Channelization - DS1 to DS0 Channel System			OH1, OH1MS	SATN1	107.57	91.24	62.71	10.56	9.81						
	DS3 to DS1 Channel System per month			OH3, OH3MS	SATNS	144.02	178.54	94.18	33.33	31.90						
	DS3 Interface Unit (DS1 COCI) per month			OH1, OH1MS	SATCO	8.64	6.59	4.73								
Notes: If no rate is identified in the contract, the rates, terms, and conditions for the specific service or function will be as set forth in applicable BellSouth tariff.																
SIGNALING (CCS7)																
NOTE:"bk" beside a rate indicates that the parties have agreed to bill and keep for that element pursuant to the terms and conditions in Attachment 3.																
	CCS7 Signaling Connection, Per 56Kbps Facility A-Link DS1			UDB	TPP6A	16.93	35.61	35.61	16.48	16.48						

LOCAL INTERCONNECTION - South Carolina														Attachment: 3 Exh A			
CATEGORY		RATE ELEMENTS	Interim	Zone	BCS	USOC		RATES($)				Svc Order Submitted Elec per LSR	Svc Order Submitted Manually per LSR	Incremental Charge - Manual Svc Order vs. Electronic-1st	Incremental Charge - Manual Svc Order vs. Electronic-Add'l	Incremental Charge - Manual Svc Order vs. Electronic-Disc 1st	Incremental Charge - Manual Svc Order vs. Electronic-Disc Add'l
							Rec	Nonrecurring		Nonrecurring Disconnect		OSS Rates($)					
								First	Add'l	First	Add'l	SOMEC	SOMAN	SOMAN	SOMAN	SOMAN	SOMAN
		CCS7 Signaling Connection, Per 56Kbps Facility A-Link DS3			UDB	TPP9A	16.93	35.61	35.61	16.48	16.48						
		CCS7 Signaling Connection, Per 56Kbps Facility B-Link DS1			UDB	TPP6B	16.93	35.61	35.61	16.48	16.48						
		CCS7 Signaling Connection, Per 56Kbps Facility B-Link DS3			UDB	TPP9B	16.93	35.61	35.61	16.48	16.48						
		CCS7 Signaling Termination, Per STP Port			UDB	PT8SX	163.49										
		CCS7 Signaling Usage, Per TCAP Message					0.0000692										
		CCS7 Signaling Usage, Per ISUP Message					0.0000173bk										
		CCS7 Signaling Usage Surrogate, per link per LATA			UDB	STU56	791.37bk										
		CCS7 Signaling Point Code, per Originating Point Code Establishment or Change, per STP affected			UDB	CCAPO		29.08	29.08	35.65	35.65						
		CCS7 Signaling Point Code, per Destination Point Code Establishment or Change, Per Stp Affected			UDB	CCAPD		29.08	29.08	35.65	35.65						
		CCS7 Signaling Connection, Switched access service, interface groups, transmissiom paths 6 DS1 level path with bit stream signaling			UDB	TPP6X	16.93	35.61	35.61	16.48	16.48						
		CCS7 Signaling Connection, Switched access service, interface groups, transmissiom paths 9 DS3 level path with bit stream signaling			UDB	TPP9X	16.93	35.61	35.61	16.48	16.48						

CATEGORY	RATE ELEMENTS	Interim	Zone	BCS	USOC	RATES($) Rec	Nonrecurring First	Nonrecurring Add'l	Nonrecurring Disconnect First	Nonrecurring Disconnect Add'l	Svc Order Submitted Elec per LSR	Svc Order Submitted Manually per LSR	Incremental Charge - Manual Svc Order vs. Electronic-1st	Incremental Charge - Manual Svc Order vs. Electronic-Add'l	Incremental Charge - Manual Svc Order vs. Electronic-Disc 1st	Incremental Charge - Manual Svc Order vs. Electronic-Disc Add'l
											OSS Rates($)					
											SOMEC	SOMAN	SOMAN	SOMAN	SOMAN	SOMAN
LOCAL INTERCONNECTION (CALL TRANSPORT AND TERMINATION)																
NOTE: "bk" beside a rate indicates that the Parties have agreed to bill and keep for that element pursuant to the terms and conditions in Attachment 3.																
TANDEM SWITCHING																
	Tandem Switching Function Per MOU					0.0009778bk										
	Multiple Tandem Switching, per MOU (applies to intial tandem only)					0.0009778										
	Tandem Intermediary Charge, per MOU*					0.0025										
*** This charge is applicable only to transit traffic and is applied in addition to applicable switching and/or interconnection charges.**																
TRUNK CHARGE																
	Installation Trunk Side Service - per DS0			OHD	TPP6X		21.59	8.09								
	Installation Trunk Side Service - per DS0			OHD	TPP9X		21.59	8.09								
	Dedicated End Office Trunk Port Service-per DS0**			OHD	TDEOP	0.00										
	Dedicated End Office Trunk Port Service-per DS1**			OH1 OH1MS	TDE1P	0.00										
	Dedicated Tandem Trunk Port Service-per DS0**			OHD	TDWOP	0.00										
	Dedicated Tandem Trunk Port Service-per DS1**			OH1 OH1MS	TDW1P	0.00										
**** This rate element is recovered on a per MOU basis and is included in the End Office Switching and Tandem Switching, per MOU rate elements**																
COMMON TRANSPORT (Shared)																
	Common Transport - Per Mile, Per MOU					0.0000064bk										
	Common Transport - Facilities Termination Per MOU					0.0003871bk										
LOCAL INTERCONNECTION (DEDICATED TRANSPORT)																
INTEROFFICE CHANNEL - DEDICATED TRANSPORT																
	Interoffice Channel - Dedicated Transport - 2-Wire Voice Grade - Per Mile per month			OHM	1L5NF	0.0174										
	Interoffice Channel - Dedicated Transport- 2- Wire Voice Grade - Facility Termination per month			OHM	1L5NF	18.58	55.39	17.37	27.96	3.51						
	Interoffice Channel - Dedicated Transport - 56 kbps - per mile per month			OHM	1L5NK	0.0174										
	Interoffice Channel - Dedicated Transport - 56 kbps - Facility Termination per month			OHM	1L5NK	17.98	55.39	17.37	27.96	3.51						
	Interoffice Channel - Dedicated Transport - 64 kbps - per mile per month			OHM	1L5NK	0.0174										
	Interoffice Channel - Dedicated Transport - 64 kbps - Facility Termination per month			OHM	1L5NK	17.98	55.39	17.37	27.96	3.51						
	Interoffice Channel - Dedicated Channel - DS1 - Per Mile per month			OH1, OH1MS	1L5NL	0.3562										
	Interoffice Channel - Dedicated Tranport - DS1 - Facility Termination per month			OH1, OH1MS	1L5NL	77.86	112.40	76.27	19.55	14.99						
	Interoffice Channel - Dedicated Transport - DS3 - Per Mile per month			OH3, OH3MS	1L5NM	2.34										
	Interoffice Channel - Dedicated Transport - DS3 - Facility Termination per month			OH3, OH3MS	1L5NM	848.99	395.29	176.56	109.04	105.91						
LOCAL CHANNEL - DEDICATED TRANSPORT																
	Local Channel - Dedicated - 2-Wire Voice Grade per month			OHM	TEFV2	15.29	199.33	24.16	54.81	4.80						
	Local Channel - Dedicated - 4-Wire Voice Grade per month			OHM	TEFV4	16.18	201.53	24.83	55.52	5.51						
	Local Channel - Dedicated - DS1 per month			OH1	TEFHG	32.25	277.35	233.26	33.18	22.30						
	Local Channel - Dedicated - DS3 Facility Termination per month			OH3	TEFHJ	611.30	595.37	304.50	215.82	151.15						
LOCAL INTERCONNECTION MID-SPAN MEET																
	Local Channel - Dedicated - DS1 per month			OH1MS	TEFHG	0.00	0.00									
	Local Channel - Dedicated - DS3 per month			OH3MS	TEFHJ	0.00	0.00									
MULTIPLEXERS																
	Channelization - DS1 to DS0 Channel System			OH1, OH1MS	SATN1	80.77	141.87	77.11	14.51	13.46						
	DS3 to DS1 Channel System per month			OH3, OH3MS	SATNS	222.98	308.03	108.47	44.47	42.62						
	DS3 Interface Unit (DS1 COCI) per month			OH1, OH1MS	SATCO	17.58	6.07	4.66								
SIGNALING (CCS7)																
NOTE:"bk" beside a rate indicates that the parties have agreed to bill and keep for that element pursuant to the terms and conditions in Attachment 3.																
	CCS7 Signaling Termination, Per STP Port			UDB	PT8SX	138.41										
	CCS7 Signaling Usage, Per TCAP Message					0.0000916bk										

LOCAL INTERCONNECTION - Tennessee														Attachment: 3 Exh: A			
CATEGORY		RATE ELEMENTS	Interim	Zone	BCS	USOC	RATES($)					Svc Order Submitted Elec per LSR	Svc Order Submitted Manually per LSR	Incremental Charge - Manual Svc Order vs. Electronic-1st	Incremental Charge - Manual Svc Order vs. Electronic-Add'l	Incremental Charge - Manual Svc Order vs. Electronic-Disc 1st	Incremental Charge - Manual Svc Order vs. Electronic-Disc Add'l
							Rec	Nonrecurring		Nonrecurring Disconnect		OSS Rates($)					
								First	Add'l	First	Add'l	SOMEC	SOMAN	SOMAN	SOMAN	SOMAN	SOMAN
		CCS7 Signaling Connection, Per DS1 level link (A link)			UDB	TPP6A	17.84	130.84	130.84					20.35	0.00	0.00	0.00
		CCS7 Signaling Connection, Per DS3 level link (A link)			UDB	TPP9A	17.84	130.84	130.84					20.35	0.00	0.00	0.00
		CCS7 Signaling Connection, Per DS1 level link (B link) (also known as D link)			UDB	TPP6B	17.84	130.84	130.84					20.35	0.00	0.00	0.00
		CCS7 Signaling Connection, Per DS3 level link (B link) (also known as D link)			UDB	TPP9B	17.84	130.84	130.84					20.35	0.00	0.00	0.00
		CCS7 Signaling Usage, Per ISUP Message					0.0000373bk										
		CCS7 Signaling Usage Surrogate, per link per LATA			UDB	STU56	352.3bk										
		Signaling Point Code, per Originating Point Code Establishment or Change, per STP			UDB	CCAPO		121.77	121.77					20.35	0.00	0.00	0.00
		CCS7 Signaling Connection, Switched access service, interface groups, transmissiom paths 6 DS1 level path with bit stream signaling			UDB	TPP6X	17.84	130.84	130.84					20.35	0.00	0.00	0.00
		CCS7 Signaling Connection, Switched access service, interface groups, transmissiom paths 9 DS3 level path with bit stream signaling			UDB	TPP9X	17.84	130.84	130.84					20.35	0.00	0.00	0.00
	Notes: If no rate is identified in the contract, the rates, terms, and conditions for the specific service or function will be as set forth in applicable BellSouth tariff.																

Attachment 4

BellSouth Collocation

Table of Contents

1. Scope of Attachment 4

2 Optional Reports 7

3 Collocation Options 8

4 Occupancy 13

5 Use of Collocation Space 15

6 Ordering and Preparation of Collocation Space 23

7 Construction and Provisioning 27

8 Rates and Charges 33

9 Insurance 41

10 Mechanics Lien 43

11 Inspections 43

12 Security and Safety Requirements 44

13 Destruction of Collocation Space 46

14 Eminent Domain 47

15 Nonexclusivity 47

Environmental & Safety Principles ..... Exhibit A

Rates ..... Exhibit B

Tennessee Regulatory Authority (TRA) Offered Language and Rates ..... Exhibit C

BELLSOUTH COLLOCATION

1. Scope of Attachment

1.1 BellSouth Premises

1.1.1 The rates, terms and conditions contained within this Attachment shall only apply when Access Point is physically collocated as a sole occupant or as a Host within a BellSouth Premises pursuant to this Attachment. BellSouth Premises, as defined in this Attachment includes BellSouth Central Offices, and Remote Terminals (hereinafter "BellSouth Premises"). This Attachment is applicable to BellSouth Premises owned or leased by BellSouth. Where not specified, the language in this Attachment applies to both Central Office and Remote Site Collocation.

1.1.2 Third Party Property. If the BellSouth Premises, or the property on which it is located, is leased by BellSouth from a third party or otherwise controlled by a third party, special considerations and intervals may apply in addition to the terms and conditions of this Attachment. Additionally, where BellSouth notifies Access Point that BellSouth's agreement with a third party does not grant BellSouth the ability to provide access and use rights to others, upon Access Point's request, BellSouth will use commercially reasonable efforts to obtain the owner's consent and to otherwise secure such rights for Access Point. Access Point agrees to reimburse BellSouth for all costs incurred by BellSouth in obtaining such rights for Access Point. In cases where a third party agreement does not grant BellSouth the right to provide access and use rights to others as contemplated by this Attachment and BellSouth, is unable to secure such access and use rights for Access Point, Access Point shall be responsible for obtaining such permission to access and use such property. BellSouth shall cooperate with Access Point in obtaining such permission.

1.2 Right to Occupy

1.2.1 BellSouth shall offer to Access Point collocation on rates, terms and conditions that are just, reasonable, nondiscriminatory and consistent with the rules of the FCC. Subject to the rates, terms and conditions of this Attachment, where space is available and it is technically feasible, BellSouth will allow Access Point to occupy a certain area designated by BellSouth within a BellSouth Premises, or on BellSouth property upon which the BellSouth Premises is located, of a size which is specified by Access Point and agreed to by BellSouth (hereinafter "Collocation Space"). Except as otherwise specified, any references to Collocation Space shall be for physical collocation. The necessary rates, terms and conditions for a premises as defined by the FCC, other than BellSouth Premises, shall be negotiated upon reasonable request for collocation at such premises.

1.2.2 Neither BellSouth nor any of BellSouth's affiliates may reserve space for future use on more preferential terms than those set forth in this Attachment.

1.2.2.1 In all states other than Florida, the size specified by Access Point may contemplate a request for space sufficient to accommodate Access Point's growth within a twenty-four (24) month period.

1.2.2.2 In the state of Florida, the size specified by Access Point may contemplate a request for space sufficient to accommodate Access Point's growth within an eighteen (18) month period.

1.3 Space Allocation. BellSouth shall assign Access Point Collocation Space that utilizes existing infrastructure (e.g., heating, ventilation, air conditioning (HVAC), lighting and available power), if such space is available for collocation. Otherwise, BellSouth shall attempt to accommodate Access Point's requested space preferences, if any, including the provision of contiguous space for any subsequent request for collocation. In allocating Collocation Space, BellSouth shall not materially increase Access Point's cost or materially delay Access Point's occupation and use of the Collocation Space, assign Collocation Space that will impair the quality of service or otherwise limit the service Access Point wishes to offer, reduce unreasonably the total space available for physical collocation or preclude reasonable physical collocation within the BellSouth Premises. Space shall not be available for collocation if it is: (a) physically occupied by non-obsolete equipment; (b) assigned to another collocated telecommunications carrier; (c) used to provide physical access to occupied space; (d) used to enable technicians to work on equipment located within occupied space; (e) properly reserved for future use, either by BellSouth or another collocated telecommunications carrier; or (f) essential for the administration and proper functioning of the BellSouth Premises. BellSouth may segregate Collocation Space and require separate entrances for collocated telecommunications carriers to access their Collocation Space, pursuant to FCC Rules.

1.4 Transfer of Collocation Space

1.4.1 Access Point shall be allowed to transfer Collocation Space to another CLEC under the following conditions: (1) the BellSouth Premises is not at or near space exhaustion; (2) the transfer of space shall be contingent upon BellSouth's approval, which will not be unreasonably withheld; (3) Access Point has no unpaid, undisputed collocation charges; and (4) the transfer of the Collocation Space is in conjunction with Access Point's sale of all or substantially all, of the in-place collocation equipment to the same CLEC.

1.4.2 The responsibilities of Access Point shall include: (1) submitting a letter of authorization to BellSouth for the transfer; (2) entering into a transfer agreement with BellSouth and the acquiring CLEC; and (3) returning all Security Access Devices to BellSouth. The responsibilities of the acquiring CLEC shall include: (1) submitting an application to BellSouth for the transfer of the Collocation Space; (2) satisfying all requirements of its interconnection agreement with BellSouth; (3) submitting a letter to BellSouth for the assumption of services; and (4) entering into a transfer agreement with BellSouth and Access Point.

1.4.3 In conjunction with a transfer of Collocation Space, any services associated with the Collocation Space shall be transferred pursuant to separately negotiated rates, terms and conditions.

1.5 Space Reclamation

1.5.1 In the event of space exhaust within a BellSouth Premises, BellSouth may include in its documentation for the Petition for Waiver filed with the Commission, any unutilized space in the BellSouth Premises. Access Point will be responsible for the justification of unutilized space within its Collocation Space, if the Commission requires such justification.

1.5.2 BellSouth may reclaim unused Collocation Space when a BellSouth Premises is at, or near, space exhaustion and Access Point cannot demonstrate that Access Point will utilize the Collocation Space in the time frames set forth below in Section 1.5.3. In the event of space exhaust or near exhaust within a BellSouth Premises, BellSouth will provide written notice to Access Point requesting that Access Point release non-utilized Collocation Space to BellSouth, when one hundred percent (100%) of the Collocation Space in Access Point's collocation arrangement is not being utilized.

1.5.3 Within twenty (20) days of receipt of written notification from BellSouth, Access Point shall either: (1) return the non-utilized Collocation Space to BellSouth in which case Access Point shall be relieved of all obligations for charges associated with that portion of the Collocation Space applicable from the date the Collocation Space is returned to BellSouth; or (2) for all states, with the exception of Florida, provide BellSouth with information demonstrating that the Collocation Space will be utilized within twenty-four (24) months from the date Access Point accepted the Collocation Space (Acceptance Date) from BellSouth. For Florida, Access Point shall provide information to BellSouth demonstrating that the Collocation Space will be utilized within eighteen (18) months from the Acceptance Date.

1.5.4 Disputes concerning BellSouth's claim of space exhaust, or near exhaust, or Access Point's refusal to return requested Collocation Space should be resolved by BellSouth and Access Point pursuant to the dispute resolution language contained in the General Terms and Conditions.

1.6 Use of Space. Access Point may only place in the Collocation Space equipment necessary for interconnection with BellSouth's services/facilities or for accessing BellSouth's unbundled network elements for the provision of Telecommunications Services, as specifically set forth in this Agreement. The Collocation Space assigned to Access Point may not be used for any purposes other than as specifically described herein, including, but not limited to office space or a place of reporting for Access Point's employees or certified suppliers.

1.7 Rates and Charges. Access Point agrees to pay the rates and charges identified in Exhibit B.

1.8 Due Dates. If any due date contained in this Attachment falls on a weekend or a national holiday, then the due date will be the next business day thereafter. For intervals of ten (10) days or less, national holidays will be excluded. For purposes

of this Attachment, national holidays include the following: New Year's Day, Martin Luther King, Jr. Day, President's Day (Washington's Birthday), Memorial Day, Independence Day, Labor Day, Columbus Day, Veteran's Day, Thanksgiving Day and Christmas Day.

1.9 Compliance. Subject to Section 24 of the General Terms and Conditions of this Agreement, the Parties agree to comply with all applicable federal, state, county, local and administrative laws, rules, ordinances, regulations and codes in the performance of their obligations hereunder.

2 Optional Reports

2.1 Space Availability Report. Upon request from Access Point and at Access Point's expense, BellSouth will provide a written report (Space Availability Report) describing in detail the space that is currently available for collocation at a particular BellSouth Premises. This report will include the amount of Collocation Space available at the BellSouth Premises requested, the number of collocators present at the BellSouth Premises, any modifications in the use of the space since the last report on the BellSouth Premises requested and the measures BellSouth is taking to make additional space available for collocation arrangements. A Space Availability Report does not reserve space at the BellSouth Premises for which the Space Availability Report was requested by Access Point.

2.1.1 The request from Access Point for a Space Availability Report must be in writing and include the BellSouth Premises street address, as identified in the LERG, and the CLLI code for the BellSouth Premises requested. CLLI code information is located in the NECA Tariff FCC No. 4.

2.1.2 BellSouth will respond to a request for a Space Availability Report for a particular BellSouth Premises within ten (10) days of the receipt of such request.

2.1.3 BellSouth will use commercially reasonable efforts to respond in ten (10) days to a Space Availability Report request when the request includes from two (2) to five (5) BellSouth Premises within the same state. The response time for Space Availability Report requests of more than five (5) BellSouth Premises, whether the request is for the same state or for two (2) or more states within the BellSouth Region, shall be negotiated between the Parties.

2.2 Remote Terminal Information. Upon request, BellSouth will provide Access Point with the following information concerning BellSouth's remote terminals: (i) the address of the remote terminal; (ii) the CLLI code of the remote terminal; (iii) the carrier serving area of the remote terminal; (iv) the designation of which remote terminals subtend a particular central office; and (v) the number and address of customers that are served by a particular remote terminal.

2.2.1 BellSouth will provide this information within thirty (30) days of a Access Point request subject to the following conditions: (i) the information will only be provided on a CD in the same format in which it appears in BellSouth's systems; and (ii) the information will only be provided for each serving wire center designated by Access Point, up to a maximum of thirty (30) wire centers per

Access Point request per month per state. BellSouth will bill the nonrecurring charge pursuant to the rates in Exhibit B at the time BellSouth sends the CD.

3 Collocation Options

3.1 Cageless Collocation. BellSouth shall allow Access Point to collocate Access Point's equipment and facilities without requiring the construction of a cage or similar structure. BellSouth shall allow Access Point to have direct access to Access Point's equipment and facilities in accordance with Section 5.1.2 below. BellSouth shall make cageless collocation available in single bay increments. Except where Access Point's equipment requires special technical considerations (e.g., special cable racking or isolated ground plane), BellSouth shall assign cageless Collocation Space in conventional equipment rack lineups where feasible. For equipment requiring special technical considerations, Access Point must provide the equipment layout, including spatial dimensions for such equipment pursuant to generic requirements contained in Telcordia GR-63-Core, and shall be responsible for compliance with all special technical requirements associated with such equipment.

3.2 Caged Collocation

3.2.1 BellSouth will make caged Collocation Space in Central Offices available in fifty (50) square foot increments. At Access Point's option and expense, Access Point will arrange with a Supplier certified by BellSouth (BellSouth Certified Supplier) to construct a collocation arrangement enclosure in accordance with BellSouth's specifications for a wire mesh enclosure prior to starting equipment installation. Where local building codes require enclosure specifications more stringent than BellSouth's wire mesh enclosure specifications, Access Point and Access Point's BellSouth Certified Supplier must comply with the more stringent local building code requirements. Access Point's BellSouth Certified Supplier shall be responsible for filing and obtaining any and all necessary permits and/or licenses for such construction. BellSouth or BellSouth's designated agent or contractor shall provide, at Access Point's expense, documentation, which may include existing building architectural drawings, enclosure drawings, specifications, etc., necessary for Access Point's BellSouth Certified Supplier to obtain all necessary permits and/or other licenses. Access Point's BellSouth Certified Supplier shall bill Access Point directly for all work performed for Access Point. BellSouth shall have no liability for, nor responsibility to pay, such charges imposed by Access Point's BellSouth Certified Supplier. Access Point must provide the local BellSouth Central Office Building Contact with two (2) Access Keys that will allow entry into the locked enclosure. Except in the case of an emergency, BellSouth will not access Access Point's locked enclosure prior to notifying Access Point at least forty-eight (48) hours or two (2) business days, whichever is greater, before access to Access Point's Collocation Space is required. Upon request, BellSouth shall construct the enclosure for Access Point.

3.2.2 In the event Access Point's BellSouth Certified Supplier will construct the collocation arrangement enclosure, BellSouth may elect to review Access Point's

plans and specifications, prior to allowing the construction to start, to ensure compliance with BellSouth's wire mesh enclosure specifications. BellSouth will notify Access Point of its desire to conduct this review in BellSouth's Application Response, as defined herein, to Access Point's Initial Application. If Access Point's Initial Application does not indicate its desire to construct its own enclosure and Access Point subsequently decides to construct its own enclosure prior to BellSouth's Application Response, then Access Point will resubmit its Initial Application, indicating its desire to construct its own enclosure. If Access Point subsequently decides construct its own enclosure after the bona fide firm order (hereinafter "BFFO") has been accepted by BellSouth, Access Point will submit a Subsequent Application, as defined in Section 6.2 below. If BellSouth elects to review Access Point's plans and specifications, then BellSouth will provide notification to Access Point within ten (10) days after the Initial Application BFFO date or, if a Subsequent Application is submitted as set forth in the preceding sentence, then the Subsequent Application BFFO date. BellSouth shall complete its review within fifteen (15) days after BellSouth's receipt of Access Point's plans and specifications. Regardless of whether or not BellSouth elects to review Access Point's plans and specifications, BellSouth reserves the right to inspect the enclosure after construction has been completed to ensure that it is constructed according to Access Point's submitted plans and specifications and/or BellSouth's wire mesh enclosure specifications, as applicable. If BellSouth decides to inspect the constructed Collocation Space, BellSouth will complete its inspection within fifteen (15) days after receipt of Access Point's written notification that the enclosure has been completed. Within seven (7) days after BellSouth has completed its inspection of Access Point's caged Collocation Space, BellSouth shall require Access Point, at Access Point's expense, to remove or correct any structure that does not meet Access Point's plans and specifications or BellSouth's wire mesh enclosure specifications, as applicable.

3.3 Shared Caged Collocation

3.3.1 Access Point may allow other telecommunications carriers to share Access Point's caged Collocation Space, pursuant to the terms and conditions agreed to by Access Point (Host) and the other telecommunications carriers (Guests) contained in this Section, except where the BellSouth Premises is located within a leased space and BellSouth is prohibited by said lease from offering such an option to Access Point. BellSouth shall be notified in writing by Access Point upon the execution of any agreement between the Host and its Guest(s) prior to the submission of an application. Further, such notification shall include the name of the Guest(s), the term of the agreement, and a certification by Access Point that said agreement imposes upon the Guest(s) the same terms and conditions for Collocation Space as set forth in this Attachment between BellSouth and Access Point. The term of the agreement between the Host and its Guest(s) shall not exceed the term of this Agreement between BellSouth and Access Point.

3.3.2 Access Point, as the Host, shall be the sole interface and responsible Party to BellSouth for the assessment and billing of rates and charges contained within this Attachment and for the purposes of ensuring that the safety and security requirements of this Attachment are fully complied with by the Guest(s), its employees and agents. BellSouth shall provide Access Point with a pro-ration of the costs of the Collocation Space based on the number of collocators and the space used by each. There will be a minimum charge of one (1) bay/rack per Host/Guest. In addition to the above, for all states other than Florida, Access Point shall be the responsible Party to BellSouth for the purpose of submitting applications for initial and additional equipment placement for the Guest(s). In Florida, the Guest(s) may submit its own Initial Application and Subsequent Applications for equipment placement using the Host's ACNA. A separate Guest application shall result in the assessment of an Initial Application Fee or a Subsequent Application Fee, as set forth in Exhibit B, which will be billed to the Host on the date that BellSouth provides its written Application Response to the Guest(s) Bona Fide application.

3.3.3 Notwithstanding the foregoing, the Guest(s) may submit service orders directly to BellSouth to request the provisioning of interconnecting facilities between BellSouth and the Guest(s), the provisioning of services, and/or access to Network Elements. The bill for these interconnecting facilities, services and Network Elements will be charged to the Guest(s) pursuant to the applicable BellSouth Tariff or the Guest's Interconnection Agreement with BellSouth.

3.3.4 Access Point shall indemnify and hold harmless BellSouth from any and all claims, actions, causes of action, of whatever kind or nature arising out of the presence of Access Point's Guest(s) in the Collocation Space, except to the extent caused by BellSouth's sole negligence, gross negligence, or willful misconduct.

3.4 <u>Adjacent Collocation</u>

3.4.1 Subject to technical feasibility and space availability, BellSouth will permit an adjacent collocation arrangement (Adjacent Arrangement) on BellSouth Premises' property only when space within the requested BellSouth Premises is legitimately exhausted and where the Adjacent Arrangement does not interfere with access to existing or planned structures or facilities on the BellSouth Premises' property. An Adjacent Arrangement shall be constructed or procured by Access Point or Access Point's BellSouth Certified Supplier and must be in conformance with the provisions of BellSouth's design and construction specifications. Further, Access Point shall construct, procure, maintain and operate said Adjacent Arrangement pursuant to all of the applicable rates, terms and conditions set forth in this Attachment.

3.4.2 If Access Point requests Adjacent Collocation, pursuant to the conditions stated in Section 3.4 above, Access Point must arrange with a BellSouth Certified Supplier to construct or procure the Adjacent Arrangement structure in accordance with BellSouth's specifications. BellSouth will provide the appropriate specifications upon request. Where local building codes require specifications more stringent

than BellSouth's own specifications, Access Point and Access Point's BellSouth Certified Supplier shall comply with the more stringent local building code requirements. Access Point's BellSouth Certified Supplier shall be responsible for filing and obtaining any and all necessary zoning, permits and/or licenses for such construction. Access Point's BellSouth Certified Supplier shall bill Access Point directly for all work performed for Access Point to comply with this Attachment. BellSouth shall have no liability for, nor responsibility to pay such charges imposed by Access Point's BellSouth Certified Supplier. Access Point must provide the local BellSouth contact with two (2) cards, keys or other access devices used to gain entry into the locked enclosure. Except in the case of an emergency, BellSouth will not access Access Point's locked enclosure prior to notifying Access Point at least forty-eight (48) hours or two (2) business days, whichever is greater, before access to the Collocation Space is required.

3.4.3 Access Point must submit its Adjacent Arrangement construction plans and specifications to BellSouth when it places its Firm Order. BellSouth shall review Access Point's plans and specifications prior to the construction of an Adjacent Arrangement to ensure Access Point's compliance with BellSouth's specifications. BellSouth shall complete its review within fifteen (15) days after receipt of the plans and specifications from Access Point for the Adjacent Arrangement. BellSouth may inspect the Adjacent Arrangement during and after construction is completed to ensure that it is constructed according to Access Point's submitted plans and specifications. If BellSouth decides to inspect the completed Adjacent Arrangement, BellSouth will complete its inspection within fifteen (15) days after receipt of Access Point's written notification that the Adjacent Arrangement has been completed. Within seven (7) days after BellSouth has completed its inspection of Access Point's Adjacent Arrangement, BellSouth shall require Access Point, at Access Point's expense, to remove or correct any structure that does not meet its submitted plans and specifications or BellSouth's specifications, as applicable.

3.4.4 Access Point shall provide a concrete pad, the structure housing the Adjacent Arrangement, HVAC, lighting and all of the facilities that are required to connect the structure (i.e., racking, conduits, etc.) to the BellSouth point of demarcation. At Access Point's option and where the local authority having jurisdiction permits, BellSouth shall provide an AC power source and access to physical Collocation services and facilities, subject to the same nondiscriminatory requirements as those applicable to any other physical Collocation arrangement. In Alabama and Louisiana, at Access Point's request and expense, BellSouth will provide Direct Current (DC) power to an Adjacent Collocation site where technically feasible, as that term has been defined by the FCC, and in accordance with applicable law. BellSouth will provide DC power in an Adjacent Arrangement provided that such provisioning can be done in compliance with the National Electric Code (NEC), all safety and building codes and any local codes, such as, but not limited to, local zoning codes, and upon completion of negotiations between the Parties on the applicable rates and provisioning intervals. Access Point will pay for any and all DC power construction and

provisioning costs to an Adjacent Arrangement through individual case basis (ICB) pricing that must be paid as follows: fifty percent (50%) before the DC installation work begins and fifty percent (50%) at completion of the DC installation work to the Adjacent Arrangement. Access Point's BellSouth Certified Supplier shall be responsible, at Access Point's sole expense, for filing the required documentation to obtain any and all necessary permits and/or licenses for an Adjacent Arrangement. BellSouth shall allow Shared Caged Collocation within an Adjacent Arrangement, pursuant to the terms and conditions set forth in Section 3.3 above.

3.5 Direct Connect

3.5.1 BellSouth will permit Access Point to directly interconnect between its own physical/virtual Collocation Spaces within the same BellSouth Premises (Direct Connect). Access Point shall contract with a BellSouth Certified Supplier to place the Direct Connect, which shall be provisioned using facilities owned by Access Point. A Direct Connect shall utilize BellSouth common cable support structure. There will be a recurring charge per linear foot, per cable, of the actual common cable support structure used by Access Point to provision the Direct Connect between its physical/virtual Collocation Spaces. In those instances where Access Point's physical/virtual Collocation Spaces are contiguous in the central office, Access Point will have the option of using Access Point's own technicians to deploy the Direct Connect using either electrical or optical facilities between its Collocation Spaces by constructing its own dedicated cable support structure. Access Point will deploy such electrical or optical connections directly between its own equipment without being routed through BellSouth's equipment or common cable support structure. Access Point may not self-provision a Direct Connect on any BellSouth distribution frame, Point of Termination (POT) Bay, Digital System Cross-Connect (DSX) panel or Light Guide Cross-Connect (LGX) panel. Access Point is solely responsible for ensuring the integrity of the signal.

3.5.2 To place an order for a Direct Connect, Access Point must submit an Initial Application or Subsequent Application to BellSouth. If no modification to the Collocation Space is requested other than the placement of a Direct Connect, the Co-Carrier Cross Connect/Direct Connect Application Fee for Direct Connect, as defined in Exhibit B, will apply. If other modifications are requested, in addition to the placement of a Direct Connect, either an Initial Application Fee or a Subsequent Application Fee will apply, pursuant to Section 6.2 below. BellSouth will bill this nonrecurring charge on the date that BellSouth provides an Application Response to Access Point.

3.6 Co-Carrier Cross Connect (CCXC)

3.6.1 A CCXC is a cross connection between Access Point and another collocated telecommunications carrier, other than BellSouth, in the same BellSouth Premises. Where technically feasible, BellSouth will permit Access Point to interconnect between its Collocation Space(s) and the physical/virtual collocation space(s) of another collocated telecommunications carrier(s) within the same

BellSouth Premises via a CCXC, pursuant to the FCC's Rules. The other collocated telecommunications carrier's agreement must also contain CCXC rates, terms and conditions before BellSouth will permit the provisioning of a CCXC between the two (2) collocated carriers. The applicable BellSouth charges will be assessed to Access Point upon Access Point's request for the CCXC. Access Point is prohibited from using the Collocation Space for the sole or primary purpose of cross-connecting to other collocated telecommunications carriers.

3.6.2 Access Point must contract with a BellSouth Certified Supplier to place the CCXC. The CCXC shall be provisioned using facilities owned by Access Point. Such cross-connections to other collocated telecommunications carriers may be made using either electrical or optical facilities. Access Point shall be responsible for providing a LOA, with the application, to BellSouth from the other collocated telecommunications carrier to which it will be cross-connecting. The CCXC shall utilize BellSouth common cable support structure. There will be a recurring charge per linear foot, per cable, of the common cable support structure used by Access Point to provision the CCXC to the other collocated telecommunications carrier. In those instances where Access Point's equipment and the equipment of the other collocated telecommunications carrier are located in contiguous caged Collocation Space, Access Point may use its own technicians to install the CCXC using either electrical or optical facilities between the equipment of both collocated telecommunications carriers by constructing a dedicated cable support structure between the two (2) contiguous cages. Access Point shall deploy such electrical or optical cross-connections directly between its own equipment and the equipment of the other collocated telecommunications carrier without being routed through BellSouth's equipment or, in the case of a CCXC provisioned between contiguous collocation spaces, common cable support structure. Access Point shall not provision CCXC on any BellSouth distribution frame, POT Bay, DSX panel or LGX panel. Access Point is solely responsible for ensuring the integrity of the signal.

3.6.3 To place an order for a CCXC, Access Point must submit an application to BellSouth. If no modification to the Collocation Space is requested other than the placement of a CCXC, the Co-Carrier Cross Connect/Direct Connect Application Fee for a CCXC, as defined in Exhibit B, will apply. If other modifications are requested, in addition to the placement of a CCXC, either an Initial Application or a Subsequent Application Fee will apply, pursuant to Section 6.2 below. BellSouth will bill this nonrecurring charge on the date that it provides an Application Response to Access Point.

4 Occupancy

4.1 Space Ready Notification. BellSouth will notify Access Point in writing when the Collocation Space is ready for occupancy (Space Ready Date).

4.2 Acceptance Walkthrough. Access Point will schedule and complete an acceptance walkthrough of new or additional provisioned Collocation Space with

BellSouth within fifteen (15) days after the Space Ready Date. BellSouth will correct any identified deviations from Access Point's original or jointly amended application within seven (7) days after the walkthrough, unless the Parties mutually agree upon a different time frame. BellSouth will then establish a new Space Ready Date. Another acceptance walkthrough will be scheduled and conducted within fifteen (15) days after the new Space Ready Date. This follow-up acceptance walkthrough will be limited to only those deviations identified in the initial walkthrough. If Access Point completes its acceptance walkthrough within the fifteen (15) day interval associated with the applicable Space Ready Date, billing will begin upon the date of Access Point's acceptance of the Collocation Space (Space Acceptance Date). In the event Access Point fails to complete an acceptance walkthrough within the fifteen (15) day interval associated with the applicable Space Ready Date, the Collocation Space shall be deemed accepted by Access Point on the Space Ready Date and billing will commence from that date.

4.3 Early Space Acceptance. If Access Point decides to occupy the Collocation Space prior to the Space Ready Date, the date Access Point executes the Agreement for Customer Access and Acceptance to Unfinished Collocation Space is the date that will be deemed the Space Acceptance Date and billing will begin from that date.

4.4 Equipment Installation. Access Point shall notify BellSouth in writing that its collocation equipment installation is complete. Access Point's collocation equipment installation is complete when Access Point's equipment is connected to BellSouth's network for the purpose of provisioning Telecommunication Services to Access Point's customers. BellSouth may refuse to accept any orders for cross-connects until it has received such notice from Access Point.

4.5 Termination of Occupancy.

4.5.1 In addition to any other provisions addressing termination of occupancy in this Agreement, Access Point may terminate its occupancy of a particular Collocation Space by submitting a Subsequent Application requesting termination of occupancy for such Collocation Space. Such termination shall be effective upon BellSouth's acceptance of the Space Relinquishment Form. Billing for monthly recurring charges will cease on the date that Access Point and BellSouth conduct an inspection of the terminated space and jointly sign off on the Space Relinquishment Form or on the date that Access Point signs off on the Space Relinquishment Form and sends this form to BellSouth, provided no discrepancies are found during BellSouth's subsequent inspection of the terminated space. If the subsequent inspection by BellSouth reveals any discrepancies, billing will cease on the date that BellSouth and Access Point jointly conduct an inspection, confirming that Access Point has corrected all of the noted discrepancies identified by BellSouth. A Subsequent Application Fee will not apply for the termination of occupancy; however, specific disconnect fees may apply to the services terminating to such Collocation Space. The particular disconnect fees that would apply in each state are contained in Exhibit B.

4.5.2 Upon termination of occupancy, Access Point, at its sole expense, shall remove its equipment and any other property owned, leased or controlled by Access Point from the Collocation Space. Access Point shall have thirty (30) days from the Bona Fide Firm Order (BFFO) date (Termination Date) to complete such removal, including the removal of all equipment and facilities of Access Point's Guest(s), unless Access Point's Guest(s) has assumed responsibility for the Collocation Space housing the Guest(s)'s equipment and executed the appropriate documentation required by BellSouth to transfer the Collocation Space to the Guest(s) prior to Access Point's Termination Date.

4.5.3 Access Point shall continue the payment of all monthly recurring charges to BellSouth until the date Access Point, and if applicable Access Point's Guest(s), has fully vacated the Collocation Space and the Space Relinquishment Form has been accepted by BellSouth. If Access Point or Access Point's Guest(s) fails to vacate the Collocation Space within thirty (30) days from the Termination Date, BellSouth shall have the right to remove and dispose of the equipment and any other property of Access Point or Access Point's Guest(s), in any manner that BellSouth deems fit, at Access Point's expense and with no liability whatsoever for Access Point's property or Access Point's Guest(s) property.

4.5.4 Upon termination of Access Point's right to occupy specific Collocation Space, the Collocation Space will revert back to BellSouth's central office space inventory. Access Point shall surrender the Collocation Space to BellSouth in the same condition as when it was first occupied by Access Point, with the exception of ordinary wear and tear, unless otherwise agreed to by the Parties. Access Point's BellSouth Certified Supplier shall be responsible for updating and making any necessary changes to BellSouth's records as required by BellSouth specifications including, but not limited to, BellSouth's Central Office Record Drawings and ERMA Records. Access Point shall be responsible for the cost of removing any Access Point constructed enclosure, as well as any supporting structures (e.g., racking, conduits, power cables, etc.), by the Termination Date and restoring the grounds to their original condition.

5 Use of Collocation Space

5.1 Equipment Type

5.1.1 BellSouth shall permit the collocation and use of any equipment necessary for interconnection to BellSouth's network and/or access to BellSouth's unbundled network elements in the provision of Telecommunications Services, as the term "necessary" is defined by FCC 47 C.F.R. § 51.323 (b). The primary purpose and function of any equipment collocated in a BellSouth Premises must be for interconnection to BellSouth's network or access to BellSouth's unbundled network elements in the provision of Telecommunications Services. Equipment is necessary for interconnection if an inability to deploy that equipment would, as a practical, economical, or operational matter, preclude the requesting carrier from obtaining interconnection with BellSouth at a level equal in quality to that

which BellSouth obtains within its own network or what BellSouth provides to any affiliate, subsidiary, or other party.

5.1.2 Examples of equipment that would not be considered necessary include, but are not limited to: traditional circuit switching equipment, equipment used exclusively for call-related databases, computer servers used exclusively for providing information services, OSS equipment used to support collocated telecommunications carrier network operations, equipment that generates customer orders, manages trouble tickets or inventory, or stores customer records in centralized databases, etc. BellSouth will determine upon receipt of an application if the requested equipment is necessary based on the criteria established by the FCC. Multifunctional equipment placed on a BellSouth Premises must not place any greater relative burden on BellSouth's property than comparable single-function equipment. BellSouth reserves the right to allow the collocation of any equipment on a nondiscriminatory basis.

5.1.3 Such equipment must, at a minimum, meet the following Telcordia Network Equipment Building Systems (NEBS) General Equipment Requirements: for Central Offices Criteria Level 1 requirements as outlined in Telcordia Special Report SR-3580, Issue 1 and for Remote Sites Criteria Level 3 requirements as outlined in the Telcordia Special report SR-3580, Issue 1. Upon request by Access Point, BellSouth, at its discretion, may consent to the collocation of any equipment not meeting these standards. Except where otherwise required by a Commission, BellSouth shall comply with the applicable FCC rules relating to denial of collocation equipment based on Access Point's failure to comply with this Section.

5.1.4 At a Remote Site, all Access Point equipment installation shall comply with BellSouth TR 73503-11h, "Grounding - Engineering Procedures". Metallic cable sheaths and metallic strength members of optical fiber cables as well as the metallic cable sheaths of all copper conductor cables shall be bonded to the designated grounding bus for the Remote Site Location. All copper conductor pairs, working and non-working, shall be equipped with a solid-state protector unit (over-voltage protection only), which has been listed by a nationally recognized testing laboratory.

5.2 Terminations. Access Point shall not request more DS0, DS1, DS3 and/or optical terminations for a collocation arrangement than the total port or termination capacity of the equipment physically installed in the Collocation Space. The total capacity of the equipment collocated in the Collocation Space will include equipment contained in an application, as well as any equipment already placed in the Collocation Space. If full network termination capacity of the equipment being installed is not requested in the application submitted by Access Point, additional network terminations for the installed equipment will require the submission of a Subsequent Application. In the event Access Point submits an application for terminations that will exceed the total capacity of the collocated equipment, Access Point will be informed of the discrepancy by BellSouth and required to submit a revision to the application.

5.3 Security Interest in Equipment. Commencing with the most current calendar quarter after the Effective Date of this Agreement, and thereafter with respect to each subsequent calendar quarter during the term of this Agreement, Access Point will, no later than thirty (30) days after the close of such calendar quarter, provide a report to ICS Collocation Product Management, Room 34th Floor, 675 W. Peachtree Street, Atlanta, Georgia 30375, listing any equipment in the Collocation Space (i) that was added during the calendar quarter to which such report pertains, and (ii) for which there is a UCC-1 lien holder or to another entity that has a secured financial interest in such equipment (Secured Equipment). If no Secured Equipment has been installed within a given calendar quarter, no report shall be due hereunder in connection with such calendar quarter.

5.4 No Marketing. Access Point shall not use the Collocation Space for marketing purposes, nor shall it place any identifying signs or markings outside the Collocation Space or on the grounds of the BellSouth Premises.

5.5 Equipment Identification. Access Point shall place a plaque or affix other identification (e.g., stenciling or labeling) to each piece of Access Point's equipment, including the appropriate emergency contacts with their corresponding telephone numbers, in order for BellSouth to properly identify Access Point's equipment in the case of an emergency. For caged Collocation Space, such identification must be placed on a plaque affixed to the outside of the caged enclosure.

5.6 Entrance Facilities.

5.6.1 Access Point may elect to place Access Point-owned or Access Point leased fiber entrance facilities into its Collocation Space. BellSouth will designate the point of interconnection in close proximity to the BellSouth Premises housing the Collocation Space, such as at an entrance manhole or a cable vault for Central Offices, which is physically accessible by both Parties. For Central Offices, Access Point will provide and place fiber cable in the entrance manhole of sufficient length to be pulled through conduit and into the splice location. Access Point will provide and install a sufficient length of fire retardant riser cable, to which BellSouth will splice the entrance cable. The fire retardant riser cable will extend from the splice location to Access Point's equipment in Access Point's Collocation Space. In the event Access Point utilizes a non-metallic, riser-type entrance facility, a splice will not be required. For Remote Terminals Access Point will provide and place copper cable through conduit from the Remote Site Collocation Space to the feeder distribution interface. Such copper cable must be of sufficient length to reach the splice location for splicing by BellSouth. Access Point must contact BellSouth for authorization and instruction prior to placing any entrance facility cable in an entrance manhole or cable vault. Access Point is responsible for the maintenance of the entrance facilities. Nonrecurring charges for cable installation will be assessed on a per cable basis as set forth in Exhibit B upon receipt of Access Point's BFFO. Recurring charges for the cable support structure will be billed at the rates set forth in Exhibit B.

5.6.2 Central Office Microwave Transmission Facilities. At Access Point's request, BellSouth will accommodate, where technically feasible and space is available, a microwave entrance facility, pursuant to separately negotiated rates, terms and conditions.

5.6.3 Central Office Copper and Coaxial Cable Entrance Facilities. In Florida and Georgia, BellSouth shall permit Access Point to use copper or coaxial cable entrance facilities, if approved by the Commission, but only in those rare instances where Access Point demonstrates a necessity and entrance capacity is not at or near exhaust in a particular BellSouth Premises in which Access Point's Collocation Space is located. In Florida, Access Point must have approval by the Commission before it submits a request for copper entrance facilities. Notwithstanding the foregoing, in the case of adjacent collocation, copper facilities may be used between the adjacent collocation arrangement and the central office demarcation point, unless BellSouth determines that limited space is available for the placement of these entrance facilities.

5.7 Dual Entrance Facilities at a Central Office. BellSouth will provide at least two (2) interconnection points at each Central Office where at least two (2) such interconnection points are available and capacity exists. Upon receipt of a request by Access Point for dual entrance facilities to its physical Collocation Space, BellSouth shall provide Access Point with information regarding BellSouth's capacity to accommodate the requested dual entrance facilities. If conduit in the serving manhole(s) is available and is not reserved for another purpose or for utilization within twelve (12) months of the receipt of an application for collocation, BellSouth will make the requested conduit space available for the installation of a second entrance facility to Access Point's Collocation Space. The location of the serving manhole(s) will be determined at the sole discretion of BellSouth. Where dual entrance facilities are not available due to a lack of capacity, BellSouth will provide this information to Access Point in the Application Response.

5.8 Shared Use

5.8.1 Access Point may utilize spare capacity on an existing telecommunications carrier's entrance facility for the purpose of obtaining an entrance facility to Access Point's Collocation Space within the same BellSouth Premises.

5.8.2 BellSouth shall allow the splice, as long as the fiber is non-working dark fiber. Access Point must arrange with BellSouth in accordance with BellSouth's Special Construction Procedures, RL93-11-030BT, and provide a LOA from the other telecommunications carrier authorizing BellSouth to perform the splice of the Access Point-provided riser cable to the spare capacity on the other telecommunications carrier's entrance facility. If Access Point desires to allow another telecommunications carrier to use its entrance facilities, the telecommunications carrier must arrange with BellSouth in accordance with BellSouth's Special Construction Procedures, RL93-11-030BT, and provide a LOA from Access Point authorizing BellSouth to perform the splice of the

telecommunications carrier's provided riser cable to the spare capacity on Access Point's entrance facility.

5.9 Demarcation Point

5.9.1 In Tennessee, if Access Point elects the Tennessee Regulatory Authority (TRA) rates as set forth in Exhibit C, the additional language also set forth in Exhibit C for Demarcation Point, will be effective in conjunction with the remaining terms and conditions of this Attachment.

5.9.2 BellSouth will designate the point(s) of demarcation between Access Point's equipment and/or network facilities and BellSouth's network facilities. Each Party will be responsible for the maintenance and operation of all equipment/facilities on its side of the demarcation point. Access Point shall be responsible for providing the common block and cabling and Access Point's BellSouth Certified Supplier shall be responsible for installing and properly labeling/stenciling the common block and any necessary cabling identified in Section 7 below. Access Point or its agent must perform all required maintenance to the equipment/facilities on its side of the demarcation point, pursuant to Section 5.10 below and may self-provision cross-connects that may be required within its own Collocation Space to activate service requests.

5.10 Equipment and Facilities. Access Point, or if required by this Attachment, Access Point's BellSouth Certified Supplier, is solely responsible for the design, engineering, installation, testing, provisioning, performance, monitoring and maintenance/repair of the equipment and network facilities used by Access Point, which must be performed in compliance with all applicable BellSouth specifications. Such equipment and network facilities may include, but are not limited to, cable(s), equipment, and POT connections. Access Point and its designated BellSouth Certified Supplier must follow and comply with all BellSouth specifications outlined in the following BellSouth Technical Requirements: TR 73503, TR 73519, TR 73572 and TR 73564.

5.11 BellSouth's Access to Collocation Space

5.11.1 From time to time, BellSouth may require access to Access Point's Collocation Space. BellSouth retains the right to access Access Point's Collocation Space for the purpose of making BellSouth equipment and building modifications (e.g., installing, altering or removing racking, ducts, electrical wiring, HVAC, and cabling). In such cases, BellSouth will give notice to Access Point at least forty-eight (48) hours before access to Access Point's Collocation Space is required. Access Point may elect to be present whenever BellSouth performs work in the Access Point's Collocation Space. The Parties agree that Access Point will not bear any of the expense associated with this type of work.

5.11.2 In the case of an emergency, BellSouth will provide oral notice of entry as soon as reasonably practicable after such entry.

5.11.3 Access Point must provide the local BellSouth Central Office Building Contact with two (2) Access Devices that will allow BellSouth entry into any enclosed

and locked Collocation Space including, but not limited to, an Adjacent Arrangement, pursuant to the requirements contained in this Section.

5.12 Access Point's Access

5.12.1 Pursuant to Section 12 below, Access Point shall have access to its Collocation Space twenty-four (24) hours a day, seven (7) days a week. Access Point agrees to provide the name, date of birth and either the social security number or driver's license number of each employee, supplier or agent of Access Point or Access Point's Guest(s) with Access Point's written request for access keys or cards (Access Devices) for specific BellSouth Premises, prior to the issuance of said Access Devices, using Form RF-2906-C, the "CLEC and CLEC Certified Supplier Access Request and Acknowledgement" form. The appropriate key acknowledgement forms (the "Collocation Acknowledgement Sheet" for access cards and the "Key Acknowledgement Form" for keys) must be signed by Access Point and returned to BellSouth Access Management within fifteen (15) days of Access Point's receipt of these forms. Failure to return these properly acknowledged forms will result in the subsequent access key or card requests being held by BellSouth until the proper acknowledgement documents have been received by BellSouth and reflect current information. Charges for Security Access System and for Security Access Devices will be billed at the rates set forth in Exhibit B. Access Devices may not be duplicated under any circumstances. Access Point agrees to be responsible for all Access Devices and for the return of all Access Devices in the possession of Access Point's employees, suppliers, agents or Guests after termination of the employment relationship, the contractual obligation with Access Point ends, upon the termination of this Agreement, or upon the termination of occupancy of Collocation Space in a specific BellSouth Premises. Access Point shall pay all applicable charges associated with lost or stolen Access Devices.

5.12.2 Access Point must submit to BellSouth the completed Access Control Request Form for all employees, suppliers, agents or Guests requiring access to a BellSouth Premises at least thirty (30) days prior to the date Access Point desires to gain access to the Collocation Space. In order to permit reasonable access during construction of the Collocation Space, Access Point may submit a request for its one (1) free accompanied site visit to its designated Collocation Space at any time subsequent to BellSouth's receipt of the BFFO. In the event Access Point desires access to its designated Collocation Space after the first accompanied free visit and Access Point's access request form(s) has not been approved by BellSouth or Access Point has not yet submitted an access request form to BellSouth, Access Point shall be permitted to access the Collocation Space accompanied by a BellSouth security escort, at Access Point's expense, which will be assessed pursuant to the Security Escort fees contained in Exhibit B. Access Point must request that escorted access be provided by BellSouth to Access Point's designated Collocation Space at least three (3) business days prior to the date such access is desired. A BellSouth security escort will be required

whenever Access Point or its approved agent or supplier requires access to the entrance manhole.

5.13 Lost or Stolen Access Devices. Access Point shall immediately notify BellSouth in writing when any of its Access Devices have been lost or stolen. If it becomes necessary for BellSouth to re-key buildings or deactivate an Access Device as a result of a lost or stolen Access Device(s) or for failure of Access Point's employees, suppliers, agents or Guest(s) to return an Access Device(s), Access Point shall pay for the costs of re-keying the building or deactivating the Access Device(s).

5.14 Interference or Impairment

5.14.1 Notwithstanding any other provisions of this Attachment, Access Point shall not use any product or service provided under this Agreement, any other service related thereto or used in combination therewith, or place or use any equipment or facilities in any manner that (1) significantly degrades, interferes with or impairs service provided by BellSouth or any other entity or any person's use of its telecommunications services; (2) endangers or damages the equipment, facilities or any other property of BellSouth or any other entity or person; (3) compromises the privacy of any communications routed through the BellSouth Premises; or (4) creates an unreasonable risk of injury or death to any individual or to the public. If BellSouth reasonably determines that any equipment or facilities of Access Point violates the provisions of this paragraph, BellSouth shall provide written notice to Access Point, which shall direct Access Point to cure the violation within forty-eight (48) hours of Access Point's receipt of written notice or, if such cure is not feasible, at a minimum, to commence curative measures within twenty-four (24) hours and exercise reasonable diligence to complete such measures as soon as possible thereafter. After receipt of the notice, the Parties agree to consult immediately and, if necessary, to conduct an inspection of the Collocation Space.

5.14.2 Except in the case of the deployment of an advanced service which significantly degrades the performance of other advanced services or traditional voice band services, if Access Point fails to cure the violation within forty-eight (48) hours or, if such cure is not possible, to commence curative action within twenty-four (24) hours and exercise reasonable diligence to complete such action as soon as possible, or if the violation is of a character that poses an immediate and substantial threat of damage to property or injury or death to any person, or any other significant degradation, interference or impairment of BellSouth's or another entity's service, then and only in that event, BellSouth may take such action as it deems necessary to eliminate such threat including, without limitation, the interruption of electrical power to Access Point's equipment and/or facilities. BellSouth will endeavor, but is not required, to provide notice to Access Point prior to the taking of such action and BellSouth shall have no liability to Access Point for any damages arising from such action, except to the extent that such action by BellSouth constitutes willful misconduct.

5.14.3 For purposes of this Section, the term "significantly degrades" shall be defined as an action that noticeably impairs a service from a user's perspective. In the case of the deployment of an advanced service which significantly degrades the performance of other advanced services or traditional voice band services and Access Point fails to cure the violation within forty-eight (48) hours, or if such cure is not possible, to commence curative action within twenty-four (24) hours and exercise reasonable diligence to complete such action as soon as possible, BellSouth will establish before the appropriate Commission that the technology deployed is causing the significant degradation. Any claims of network harm presented to Access Point or, if subsequently necessary, the Commission must be provided by BellSouth with specific and verifiable information. When BellSouth demonstrates that a certain technology deployed by Access Point is significantly degrading the performance of other advanced services or traditional voice band services, Access Point shall discontinue deployment of that technology and migrate its customers to other technologies that will not significantly degrade the performance of such services. Where the only degraded service itself is a known disturber, and the newly deployed technology satisfies at least one of the criteria for a presumption that it is acceptable for deployment, pursuant to 47 C.F.R. § 51.230, the degraded service shall not prevail against the newly-deployed technology.

5.15 Personalty and Its Removal. Facilities and equipment placed by Access Point in the Collocation Space shall not become a part of the Collocation Space, even if nailed, screwed or otherwise fastened to the Collocation Space, but shall retain their status as personal property and may be removed by Access Point at any time. Any damage caused to the Collocation Space by Access Point's employees, suppliers, agents or Guests during the installation or removal of such property shall be promptly repaired by Access Point at its sole expense. If Access Point decides to remove equipment and/or facilities from its Collocation Space and the removal requires no physical work be performed by BellSouth and Access Point's physical work includes, but is not limited to, power reduction, cross-connects, or tie pairs, BellSouth will bill Access Point the Administrative Only Application Fee associated with the type of removal activity performed by Access Point, as set forth in Exhibit B. This nonrecurring fee will be billed on the date that BellSouth provides an Application Response to Access Point.

5.16 Alterations. Under no condition shall Access Point or any person acting on behalf of Access Point make any rearrangement, modification, augment, improvement, addition, and/or other alteration which could affect in any way space, power, HVAC, and/or safety considerations to the Collocation Space or the BellSouth Premises, hereinafter referred to individually or collectively as "Alterations", without the express written consent of BellSouth, which shall not be unreasonably withheld. The cost of any such Alteration shall be paid by Access Point. An Alteration shall require the submission of a Subsequent Application and will result in the assessment of the applicable application fee associated with the type of alteration requested, as set forth in Sections 6.2.1 and 7.1.4 below, which will

be billed by BellSouth on the date that BellSouth provides Access Point with an Application Response.

5.17 Central Office Janitorial Service. Access Point shall be responsible for the general upkeep of its Collocation Space. Access Point shall arrange directly with a BellSouth Certified Supplier for janitorial services applicable to caged Collocation Space. Upon request, BellSouth shall provide a list of such suppliers on a BellSouth Premises-specific basis.

5.18 Upkeep of Remote Collocation Space. Access Point shall be responsible for the general upkeep and cleaning of the Remote Collocation Space. Access Point shall be responsible for removing any of Access Point's debris from the Remote Collocation Space and from in and around the Remote Site Location on each visit.

6 Ordering and Preparation of Collocation Space

6.1 Initial Application. For Access Point's or Access Point's Guest's(s') initial equipment placement, Access Point shall input a physical Expanded Interconnection Application Document (Initial Application) for physical Collocation Space directly into BellSouth's electronic application (e.App) system for processing. The Initial Application is considered Bona Fide when it is complete and accurate, meaning that all of the required fields on the Initial Application are completed with the appropriate type of information. An Initial Application Fee, as set forth in Exhibit B, will apply to each Initial Application submitted by Access Point for Central Office or Remote Site Collocation, as applicable, and will be billed by BellSouth on the date BellSouth provides Access Point with an Application Response.

6.1.1 For Remote Site Collocation, a request for additional space at a later date will require the submission of an Initial Application. The installation of additional shelves/equipment within an existing bay does not require an Initial Application.

6.2 Subsequent Application. In the event Access Point or Access Point's Guest(s) desires to modify its use of the Collocation Space in a Central Office after a BFFO, Access Point shall complete an application that contains all of the detailed information associated with a requested Alteration of the Collocation Space, as defined in Section 5.15 above (Subsequent Application). The Subsequent Application will be considered Bona Fide when it is complete and accurate, meaning that all of the required fields on the Subsequent Application have been completed with the appropriate type of information associated with the requested Alteration. BellSouth shall determine what modifications, if any, to the BellSouth Premises are required to accommodate the change(s) requested by Access Point in the Subsequent Application. Such modifications to the BellSouth Premises may include, but are not limited to, floor loading changes, changes necessary to meet HVAC requirements, changes to power plant requirements, equipment additions, etc.

6.2.1 Subsequent Application Fees. The application fee paid by Access Point for an Alteration in a Central Office shall be dependent upon the level of assessment needed to provide a complete Application Response for the Alteration requested. Where the Subsequent Application does not require provisioning or construction work, but requires BellSouth to perform an administrative activity, an Administrative Only Application Fee shall apply as set forth in Exhibit B. The Administrative Only Application Fee will apply to Subsequent Applications associated with a transfer of ownership of the Collocation Space, removal of equipment from the Collocation Space (where the removal requires no physical work to be performed by BellSouth), and a virtual-to-physical conversion (in place). The Co-Carrier Cross Connect/Direct Connect Application Fee will apply when Access Point submits a Subsequent Application for a direct connection between its own physical and virtual Collocation Space(s) in the same BellSouth Central Office or between its physical or virtual Collocation Space and that of another collocated telecommunications carrier within the same BellSouth Central Office. In Florida and Tennessee, the Power Reconfiguration Only Application Fee will apply when Access Point submits a Subsequent Application that reflects only an upgrade or reduction in the amount of power that BellSouth is currently providing to Access Point's physical Collocation Space in a Central Office. The fee for a Subsequent Application, for which the Alteration requested has limited effect (e.g., requires limited assessment and sufficient cable support structure, HVAC, power and terminations are available), shall be the Subsequent Application Fee, as set forth in Exhibit B. The appropriate nonrecurring application fee will be billed on the date that BellSouth provides Access Point with an Application Response.

6.3 Space Preferences. If Access Point has previously requested and received a Space Availability Report for the BellSouth Premises, Access Point may submit up to three (3) space preferences on its application by identifying the specific space identification numbers referenced on the Space Availability Report for the space it is requesting. In the event BellSouth cannot accommodate Access Point's space preference(s), Access Point may accept the space allocated by BellSouth or cancel its application and submit another application requesting additional space preferences for the same BellSouth Premises. This application will be treated as a new application and the appropriate application fee will apply. The application fee will be billed by BellSouth on the date that BellSouth provides Access Point with an Application Response.

6.4 Space Availability Notification

6.4.1 For all states except Florida and Tennessee, BellSouth will respond to an application within ten (10) days as to whether space is available or not available within the requested BellSouth Premises. In Florida and Tennessee, BellSouth will respond to an application within fifteen (15) days as to whether space is available or not available within a BellSouth Premises. BellSouth's e.App system will reflect when Access Point's application is Bona Fide. If the application

cannot be Bona Fide, BellSouth will identify what revisions are necessary for the application to become Bona Fide.

6.4.2 If the amount of space requested is not available, BellSouth will notify Access Point of the amount of space that is available and no application fee will apply. When BellSouth's response includes an amount of space less than that requested by Access Point or space that is configured differently, no application fee will apply. If Access Point decides to accept the available space, Access Point must resubmit its application to reflect the actual space available, including the configuration of the space, prior to submitting a BFFO. When Access Point resubmits its application to accept the available space, BellSouth will bill Access Point the appropriate application fee.

6.5 Denial of Application. If BellSouth notifies Access Point that no space is available (Denial of Application), BellSouth will not assess an application fee to Access Point. After notifying Access Point that BellSouth has no available space in the requested BellSouth Premises, BellSouth will allow Access Point, upon request, to tour the entire BellSouth Premises within ten (10) days of such Denial of Application. In order to schedule this tour, BellSouth must receive the request for the tour of the BellSouth Premises within five (5) days of the Denial of Application.

6.6 Petition for Waiver. Upon Denial of Application, BellSouth will timely file a petition with the appropriate Commission pursuant to 47 U.S.C. § 251(c)(6). BellSouth shall provide to the Commission any information requested by that Commission. Such information shall include which space, if any, BellSouth or any of BellSouth's affiliates have reserved for future use and a detailed description of the specific future uses for which the space has been reserved. Subject to an appropriate nondisclosure agreement or provision, BellSouth shall permit Access Point to inspect any floor plans or diagrams that BellSouth provides to the Commission.

6.7 Waiting List

6.7.1 On a first-come, first-serve basis, which is governed by the date of receipt of an application or Letter of Intent, BellSouth will maintain a waiting list of requesting telecommunications carriers that have either received a Denial of Application or, where it is publicly known that a BellSouth Premises is out of space, have submitted a Letter of Intent to collocate in that BellSouth Premises. BellSouth will notify each telecommunications carrier on the waiting list that can be accommodated by the amount of space that becomes available, according to the position of the telecommunications carrier on said waiting list.

6.7.2 In Florida, on a first-come, first-serve basis, which is governed by the date of receipt of an application or Letter of Intent, BellSouth will maintain a waiting list of requesting telecommunications carriers that have either received a Denial of Application or, where it is publicly known that a BellSouth Premises is out of space, have submitted a Letter of Intent to collocate in that BellSouth Premises. Sixty (60) days prior to space becoming available, if known, BellSouth will notify

the Commission and the telecommunications carriers on the waiting list by mail when space will become available. If BellSouth does not know sixty (60) days in advance of when space will become available, BellSouth will notify the Commission and the telecommunications carriers on the waiting list within two (2) business days of the determination that space will become available. A telecommunications carrier that, upon denial of physical Collocation Space, requests virtual Collocation Space shall automatically be placed on the waiting list for physical Collocation Space that may become available in the future.

6.7.3 When physical Collocation Space becomes available, Access Point must submit an updated, complete and accurate application to BellSouth within thirty (30) days of notification by BellSouth that physical Collocation Space will be available in the requested BellSouth Premises previously out of space. If Access Point has originally requested caged Collocation Space and cageless Collocation Space becomes available, Access Point may refuse such space and notify BellSouth in writing, within the thirty (30) day timeframe referenced above, that Access Point wishes to maintain its place on the waiting list for caged physical Collocation Space, without accepting the available cageless Collocation Space.

6.7.4 Access Point may accept an amount of space less than what it originally requested by submitting an application as set forth above, and upon request, may maintain its position on the waiting list for the remaining space that was initially requested. If Access Point does not submit an application or notify BellSouth in writing within the thirty (30) day timeframe as described in Section 6.7.2 above, BellSouth will offer the available space to the next telecommunications carrier on the waiting list and remove Access Point from the waiting list. Upon request, BellSouth will advise Access Point as to its position on the waiting list for a particular BellSouth Premises.

6.8 Public Notification. BellSouth will maintain on its Interconnection Web site, a notification document that will indicate all BellSouth Premises that are without available space. BellSouth shall update such document within ten (10) days of the date that BellSouth becomes aware that insufficient space is available to accommodate physical Collocation. BellSouth will also post a document on its Interconnection Web site that contains a general notice when space becomes available in a BellSouth Premises previously on the space exhaust list.

6.9 Application Response

6.9.1 In Alabama, Georgia, Kentucky, Louisiana, Mississippi, North Carolina and South Carolina, when space has been determined to be available for physical (caged or cageless) Collocation arrangements, BellSouth will provide an Application Response within twenty (20) days of receipt of a Bona Fide application. The Application Response will be a written response that includes sufficient information to enable Access Point to place a Firm Order, which, at a minimum, will include the configuration of the space, the Cable Installation Fee, the Cable Records Fee, and any other applicable space preparation fees, as described in Section 8 below.

6.9.2 In Florida and Tennessee, within fifteen (15) days of receipt of a Bona Fide application, when space has been determined to be available or when a lesser amount of space than that requested is available, then with respect to the space available, BellSouth will provide an Application Response including sufficient information to enable Access Point to place a Firm Order. The Application Response will include, at a minimum, the configuration of the space, the Cable Installation Fee, the Cable Records Fee and any other applicable space preparation fees, as described in Section 8 below. When Access Point submits ten (10) or more applications within ten (10) days, the initial fifteen (15) day response interval will increase by ten (10) days for every additional ten (10) applications or fraction thereof.

6.10 Application Modifications. If a modification or revision is made to any information in the Bona Fide application after BellSouth has provided the Application Response and prior to a BFFO, with the exception of modifications to (1) Customer Information, (2) Contact Information or (3) Billing Contact Information, whether at the request of Access Point or as necessitated by technical considerations, the application shall be considered a new application and handled as a new application with respect to the response and provisioning intervals. BellSouth will charge Access Point the appropriate application fee associated with the level of assessment performed by BellSouth, pursuant to Sections 6.1 and 6.2 above.

6.11 Bona Fide Firm Order

6.11.1 Access Point shall indicate its intent to proceed with a Collocation Space request in a BellSouth Premises by submitting a BFFO to BellSouth. The BFFO must be received by BellSouth no later than thirty (30) days after BellSouth's Application Response to Access Point's Bona Fide application or Access Point's application will expire.

6.11.2 BellSouth will establish a Firm Order date based upon the date BellSouth is in receipt of Access Point's BFFO. BellSouth will acknowledge the receipt of Access Point's BFFO within seven (7) days of receipt, so that Access Point will have positive confirmation that its BFFO has been received. BellSouth's response to a BFFO will include a Firm Order Confirmation, which contains the firm order date. No revisions may be made to a BFFO.

7 Construction and Provisioning

7.1 Construction and Provisioning Intervals

7.1.1 In Florida and Tennessee, BellSouth will complete construction of physical Collocation Space as soon as possible within a maximum of ninety (90) days from receipt of a BFFO or as agreed to by the Parties. For virtual Collocation Space, BellSouth will complete construction as soon as possible within a maximum of sixty (60) days from receipt of a BFFO or as agreed to by the Parties. For Alterations requested to Collocation Space after the initial space has been completed, BellSouth will complete construction for Collocation Space as soon as possible within a maximum of forty-five (45) days from receipt of a BFFO or as

agreed to by the Parties, as long as no additional space has been requested by Access Point. If additional space has been requested by Access Point, BellSouth will complete construction for the requested Collocation Space as soon as possible within a maximum of ninety (90) days from receipt of a BFFO for physical Collocation Space and forty five (45) days from receipt of a BFFO for virtual Collocation Space. If BellSouth does not believe that construction will be completed within the relevant provisioning interval and BellSouth and Access Point cannot agree upon a completion date, within forty-five (45) days of receipt of the BFFO for an initial request, or within thirty (30) days of receipt of the BFFO for an Alteration, BellSouth may seek an extension from the Commission.

7.1.2 In Alabama, Georgia, Kentucky, Louisiana, Mississippi, North Carolina and South Carolina, BellSouth will complete construction for caged physical Collocation Space under ordinary conditions as soon as possible within a maximum of ninety (90) days from receipt of a BFFO or as agreed to by the Parties. BellSouth will complete construction for cageless physical Collocation Space under ordinary conditions as soon as possible within a maximum of sixty (60) days from receipt of a BFFO and ninety (90) days from receipt of a BFFO for extraordinary conditions, or as agreed to by the Parties. Ordinary conditions are defined as space available with only minor changes required to BellSouth's support systems. (Examples include, but are not limited to: minor modifications to HVAC, cabling and BellSouth's power plant.) Extraordinary conditions include, but may not be limited to: major BellSouth equipment rearrangements or additions; power plant additions or upgrades; major mechanical additions or upgrades; major upgrades for ADA compliance; environmental hazards or hazardous materials abatement; and arrangements for which equipment shipping intervals are extraordinary in length. The Parties may mutually agree to renegotiate an alternative provisioning interval for the Collocation Space requested or BellSouth may seek a waiver from the ordered interval, as set forth above, from the appropriate Commission, if BellSouth does not believe that construction will be completed within the relevant provisioning interval.

7.1.3 Records Only Change. When Access Point adds equipment, that was originally included on Access Point's Initial Application or a Subsequent Application, and the installation of this equipment requires no additional space preparation work or cable terminations on the part of BellSouth, then BellSouth will impose no additional charges or intervals.

7.1.4 For Central Offices in the states of Alabama, Georgia, Kentucky, Louisiana, Mississippi, North Carolina, and South Carolina, BellSouth will provide the reduced intervals outlined below to Access Point, when Access Point requests an Alteration specifically identified in Sections 7.1.4.1 through 7.1.4.9 below as an "Augment". Except as otherwise set forth in Section 7.1.4.10 below, such Augment will require a Subsequent Application and will result in the assessment of the appropriate application fee associated with the type of Augment requested by Access Point. BellSouth will assess the appropriate nonrecurring application

fee set forth in Exhibit B on the date that it provides an Application Response to Access Point.

7.1.4.1 Simple Augments will be completed within twenty (20) days after receipt of the BFFO for an:

- Extension of Existing AC Circuit Capacity within Arrangement where Sufficient Circuit Capacity is Available
- Fuse Change and/or Increase or Decrease -48 Volt (-48V) DC Power

7.1.4.2 Minor Augments will be completed within forty-five (45) days after receipt of the BFFO for:

- 168 DS1 Terminations at the BellSouth Demarcation Frame (Databasing Only; Panels, Relay Racks and Overhead Racking Exist)
- 96 DS3 Terminations at the BellSouth Demarcation Frame (Databasing Only; Panels, Relay Racks and Overhead Racking Exist)
- 99 Fiber terminations at the BellSouth Demarcation Frame (Databasing Only; Panels, Relay Racks and Overhead Racking Exist)
- Maximum of 2000 Service Ready DS0 Terminations at the BellSouth Demarcation Frame (Databasing Only; Panels, Relay Racks and Overhead Racking Exist)

7.1.4.3 Intermediate Augments will be completed within sixty (60) days after receipt of the BFFO for:

- 168 DS1s (Databasing and Installation of Termination Panels, Relay Racks or Additional Structure, as Required)
- 96 DS3s (Databasing and Installation of Termination Panels, Relay Racks or Additional Structure, as Required)
- 99 Fiber Terminations (Databasing and Installation of Termination Panels, Relay Racks or Additional Structure, as Required)
- 2000 DS0s (Databasing and Installation of Termination Panels, Relay Racks or Additional Structure, as Required)
- Installation of Cable Racking or Other Support Structure, as Required, to Support CCXCs (Adequate Floor or Ceiling Structural Capacity Exists and Support/Protection structure for Fiber Patch Cord is Excluded)

7.1.4.4 Major Augments of physical Collocation Space will be completed within ninety (90) days after BFFO. All requests for additional Physical Collocation Space (caged or cageless) are included in this category.

7.1.4.5 Major Augments of virtual Collocation Space will be completed within seventy-five (75) days after BFFO. This category includes all requests for additional virtual Collocation Space.

7.1.4.6 If Access Point submits an Augment that includes two (2) Augment items from the same category in either Sections 7.1.4.1, 7.1.4.2 or 7.1.4.3 above, the

provisioning interval associated with the next highest Augment category will apply (e.g., if two (2) items from the Minor Augment category are requested on the same request, then an interval of sixty (60) days from the receipt of the BFFO would apply, which is the interval associated with the Intermediate Augment category).

7.1.4.7 If Access Point submits an Augment that includes three (3) Augment items from the same category in either Sections 7.1.4.1, 7.1.4.2, or 7.1.4.3 above, the Major Augment interval of ninety (90) days from the receipt of the BFFO would apply (e.g., if three (3) items from the Simple Augment category are requested on the same request for a physical Collocation arrangement, then an interval of ninety (90) days from the receipt of the BFFO would apply, which is the Major physical Augment interval; likewise if three (3) items from the Simple Augment category are requested on the same request for a virtual Collocation arrangement, then an interval of seventy-five (75) days from the receipt of the BFFO would apply, which is the Major virtual Augment interval).

7.1.4.8 If Access Point submits an Augment that includes one (1) Augment item from two (2) separate categories in Sections 7.1.4.1, 7.1.4.2 and 7.1.4.3 above, the Augment interval associated with the highest Augment category will apply (e.g., if an item from the Minor Augment category and an item from the Intermediate Augment category are requested on the same request, then an interval of sixty (60) days from the receipt of the BFFO would apply, which is the interval associated with the Intermediate Augment category).

7.1.4.9 All Augments not expressly included in the Simple, Minor, Intermediate or Major Augment categories, as outlined above, will be placed into the appropriate category as negotiated by Access Point and BellSouth. If Access Point and BellSouth are unable to determine the appropriate category through negotiation, then the appropriate Major Augment category, identified in Sections 7.1.4.4 and Section 7.1.4.5 above, would apply based on whether the Augment is for Access Point's physical or virtual Collocation Space.

7.1.4.10 Individual application fees associated with Simple, Minor and Intermediate Augments are contained in Exhibit B. If Access Point requests multiple items from different Augment categories, BellSouth will bill Access Point the Augment application fee, as identified in Exhibit B, associated with the higher Augment category only. The appropriate application fee will be assessed to Access Point at the time BellSouth provides Access Point with the Application Response. Access Point will be assessed a Subsequent Application Fee for all Major Augments (Major Augments are defined above in Sections 7.1.4.4 and 7.1.4.5 above for physical and virtual Collocation Space, respectively). The Subsequent Application Fee is also reflected in Exhibit B.

7.2 Joint Planning. Unless otherwise agreed to by the Parties, a joint planning meeting or other method of joint planning between BellSouth and Access Point will commence within a maximum of twenty (20) days from BellSouth's receipt

of a BFFO. At such meeting, the Parties will agree to the preliminary design of the Collocation Space and the equipment configuration requirements, as reflected in the application and affirmed in the BFFO.

7.3 Permits. Each Party, its agent(s) or BellSouth Certified Supplier(s) will diligently pursue filing for the permits required for the scope of work to be performed by that Party, its agent(s) or BellSouth Certified Supplier(s) within ten (10) days of the completion of the finalized construction design and specifications.

7.4 Central Office Circuit Facility Assignments

7.4.1 Unless otherwise specified, BellSouth will provide Circuit Facility Assignments (CFAs) to Access Point prior to the applicable provisioning interval set forth herein (Provisioning Interval) for those BellSouth Premises in which Access Point has physical Collocation Space with no POT bay or with a grandfathered POT bay provided by BellSouth. BellSouth cannot provide CFAs to Access Point prior to the Provisioning Interval for those BellSouth Premises in which Access Point has physical Collocation Space with a POT bay provided by Access Point or virtual Collocation Space, until Access Point has provided BellSouth with the following information:

7.4.1.1 For physical Central Office Collocation Space with a Access Point-provided POT bay, Access Point shall provide BellSouth with a complete layout of the POT panels on an Equipment Inventory Update (EIU) form that shows the locations, speeds, etc.; or

7.4.1.2 For virtual Central Office Collocation Space, Access Point shall provide BellSouth with a complete layout of Access Point's equipment on an EIU form, that includes the locations of the low speed ports and the specific frame terminations to which the equipment will be wired by Access Point's BellSouth Certified Supplier.

7.4.2 BellSouth cannot begin work on the CFAs until the complete and accurate EIU form has been received from Access Point. If the EIU form is provided within ten (10) days prior to the ending date of the Provisioning Interval, then the CFAs will be made available by the ending date of the Provisioning Interval. If the EIU form is not received ten (10) days prior to the ending date of the Provisioning Interval, then the CFAs will be provided within ten (10) days of BellSouth's receipt of the EIU form.

7.4.3 BellSouth will bill Access Point a nonrecurring charge, as set forth in Exhibit B, each time Access Point requests a resend of its original CFA information for any reason other than a BellSouth error in the CFAs initially provided to Access Point.

7.5 Use of BellSouth Certified Supplier. Access Point shall select a supplier which has been approved as a BellSouth Certified Supplier to perform all engineering and installation work. Access Point, if a BellSouth Certified Supplier or Access Point's BellSouth Certified Supplier must follow and comply with all of BellSouth's specifications and the following BellSouth Technical Requirements: TR 73503, TR 73519, TR 73572 and TR 73564. Unless the BellSouth Certified

Supplier has met the requirements for all of the required work activities, Access Point must use a different BellSouth Certified Supplier for the work activities associated with transmission equipment, switching equipment and power equipment. BellSouth shall provide Access Point with a list of BellSouth Certified Suppliers, upon request. Access Point, if a BellSouth Certified Supplier, or Access Point's BellSouth Certified Supplier(s) shall be responsible for installing Access Point's equipment and associated components, extending power cabling to the BellSouth power distribution frame, performing operational tests after installation is complete, and notifying BellSouth's equipment engineers and Access Point upon successful completion of the installation and any associated work. When a BellSouth Certified Supplier is used by Access Point, the BellSouth Certified Supplier shall bill Access Point directly for all work performed for Access Point pursuant to this Attachment. BellSouth shall have no liability for nor responsibility to pay, such charges imposed by Access Point's BellSouth Certified Supplier. BellSouth shall make available its supplier certification program to Access Point or any supplier proposed by Access Point and will not unreasonably withhold certification. All work performed by or for Access Point shall conform to generally accepted industry standards.

7.6 Alarms and Monitoring. BellSouth shall place environmental alarms in the BellSouth Premises for the protection of BellSouth equipment and facilities. Access Point shall be responsible for the placement, monitoring and removal of environmental and equipment alarms used to service Access Point's Collocation Space. Upon request, BellSouth will provide Access Point with an applicable BellSouth tariffed service(s) to facilitate remote monitoring of collocated equipment by Access Point. Both Parties shall use best efforts to notify the other of any verified environmental condition (e.g., temperature extremes or excess humidity) known to that Party.

7.7 Virtual to Physical Relocation. In the event physical Collocation Space was previously denied at a BellSouth Central Office due to technical reasons or space limitations and physical Collocation Space has subsequently become available, Access Point may relocate its existing virtual Collocation arrangement(s) to a physical Collocation arrangement(s) and pay the appropriate fees associated with the rearrangement or reconfiguration of the services being terminated into the virtual Collocation arrangement, as set forth in Exhibit B. If BellSouth knows when additional physical Collocation Space may become available at the BellSouth Central Office requested by Access Point, such information will be provided to Access Point in BellSouth's written denial of physical Collocation Space. Access Point must arrange with a BellSouth Certified Supplier for the relocation of equipment from a virtual Collocation Space to a physical Collocation Space and will bear the cost of such relocation, including the costs associated with moving the services from the virtual Collocation Space to the new physical Collocation Space.

7.7.1 In Alabama, BellSouth will complete a relocation of a virtual collocation arrangement to a cageless physical collocation arrangement within sixty (60) days

from BellSouth's receipt of a BFFO and from a virtual collocation arrangement to a caged physical collocation arrangement within ninety (90) days from BellSouth's receipt of a BFFO.

7.8 Virtual to Physical Conversion (In-Place)

7.8.1 Virtual collocation arrangements in Central Offices may be converted to "in-place" physical caged collocation arrangements if the potential conversion meets all of the following criteria: (1) there is no change in the amount of equipment or the configuration of the equipment that was in the virtual Collocation Space; (2) the conversion of the virtual collocation arrangement will not cause the equipment or the results of that conversion to be located in a space that BellSouth has reserved for its own future needs; and (3) any changes to the arrangement can be accommodated by existing power, HVAC, and other requirements. Unless otherwise specified herein, BellSouth will complete virtual to physical Collocation Space conversions (in-place) within sixty (60) days from receipt of the BFFO. BellSouth will bill Access Point an Administrative Only Application Fee, as set forth in Exhibit B, on the date BellSouth provides an Application Response to Access Point.

7.8.2 In Alabama and Tennessee, BellSouth will complete virtual to physical conversions (in place) within thirty (30) days from receipt of the BFFO as long as the conversion meets all of the criteria specified in Section 7.8.1 above.

7.9 Cancellation. Unless otherwise specified in this Attachment, if at any time prior to Space Acceptance, Access Point cancels its order for Collocation Space (Cancellation), BellSouth will bill the applicable nonrecurring charge(s) for any and all work processes for which work has begun or been completed. In Florida, if Access Point cancels its order for Collocation Space at any time prior to the Space Ready Date, no cancellation fee shall be assessed by BellSouth; however, Access Point will be responsible for reimbursing BellSouth for any costs specifically incurred by BellSouth on behalf of Access Point up to the date that the written notice of cancellation was received by BellSouth. In Georgia, if Access Point cancels its order for Collocation Space at any time prior to space acceptance, BellSouth will bill Access Point for all costs incurred prior to the date of Cancellation and for any costs incurred as a direct result of the Cancellation, not to exceed the total amount that would have been due had the Firm Order not been canceled.

7.10 Licenses. Access Point, at its own expense, will be solely responsible for obtaining from governmental authorities, and any other appropriate agency, entity, or person, all rights, privileges, permits, licenses and certificates necessary or required to operate as a provider of telecommunications services to the public or to build-out, equip and/or occupy Collocation Space in a BellSouth Premises.

7.11 Environmental Compliance. The Parties agree to utilize and adhere to the Environmental Hazard Guidelines identified in Exhibit A attached hereto.

8 Rates and Charges

8.1 Rates. Access Point agrees to pay the rates and charges identified in Exhibit B attached hereto.

8.1.1 In Tennessee, if Access Point elects the TRA rates as set forth in Exhibit C, the additional language also set forth in Exhibit C for Application Fee, Space Preparation, Floor Space and Caged Collocation Power Usage metering, will be effective in conjunction with the remaining terms and conditions of this Attachment.

8.1.2 Should Access Point elect to transition to the TRA Option after the execution of this Agreement, Access Point shall notify BellSouth in writing sixty (60) days prior to the implementation of this election.

8.2 Application Fees. BellSouth shall assess any nonrecurring application fees within thirty (30) days of the date that BellSouth provides an Application Response to Access Point or on Access Point's next scheduled monthly billing statement.

8.3 Recurring Charges

8.3.1 If Access Point has met the applicable fifteen (15) day acceptance walk through interval specified in Section 4.2 above, billing for recurring charges will begin upon the Space Acceptance Date. In the event Access Point fails to complete an acceptance walk through within the applicable fifteen (15) day interval, billing for recurring charges will commence on the Space Ready Date. If Access Point occupies the space prior to the Space Ready Date, the date Access Point occupies the space is deemed the Space Acceptance Date and billing for recurring charges will begin on that date. The billing for all applicable monthly recurring charges will begin in Access Point's next billing cycle and will include any prorated charges for the period from Access Point's Space Acceptance Date or Space Ready Date, whichever is appropriate pursuant to Section 4.2 above, to the date the bill is issued by BellSouth.

8.3.2 Unless otherwise stated in Section 8.6 below, monthly recurring charges for -48V DC power will be assessed per fused ampere (amp), per month, based upon the total number of fused amps of power capacity requested by Access Point on Access Point's Initial Collocation Application and all Subsequent Collocation Applications, which may either increase or decrease the originally requested, and any subsequently augmented, number of fused amps of power capacity requested, consistent with Commission orders.

8.3.3 BellSouth shall have the right to inspect and inventory any DC power fuse installations at a BellSouth BDFB or DC power circuit installations at BellSouth's main power board for any Access Point collocation arrangement, to verify that the total number of fused amps of power capacity installed by Access Point's BellSouth Certified Supplier matches the number of fused amps of DC power capacity requested by Access Point on Access Point's Initial Application and all Subsequent Applications. If BellSouth determines that Access Point's BellSouth Certified Supplier has installed more DC capacity than Access Point requested on its Initial Application and all Subsequent Applications, BellSouth shall notify

Access Point in writing of such discrepancy and shall assess Access Point for the additional DC power fuse/circuit capacity from the Space Acceptance Date or Space Ready Date, whichever is applicable pursuant to Section 8.3.1 above, for the most recent Initial Application or Subsequent Application, submitted for such collocation arrangement. BellSouth shall also revise Access Point's recurring DC power charges, on a going-forward basis, to reflect the higher number of fused amps of power capacity available for the collocation arrangement.

8.4 Nonrecurring Charges. Unless specified otherwise herein, BellSouth shall assess nonrecurring charges, including all application fees, within thirty (30) days of the date that BellSouth provides an Application Response to Access Point or on Access Point's next scheduled monthly billing statement, if Access Point's current month's billing cycle has already closed. Nonrecurring charges associated with the processing of the Firm Order for collocation space preparation (Firm Order Processing Fee) shall be billed by BellSouth within thirty (30) days of BellSouth's confirmation of Access Point's BFFO or on Access Point's next scheduled monthly billing statement.

8.5 Central Office Space Preparation. Space preparation fees consist of a nonrecurring charge for Firm Order Processing and monthly recurring charges for Central Office Modifications and Common Systems Modifications. For all states except Florida, Access Point shall remit the payment of the nonrecurring Firm Order Processing Fee coincident with the submission of Access Point's BFFO. In Florida, the nonrecurring Firm Order Processing Fee will be billed by BellSouth, pursuant to Section 8.4 above. The monthly recurring charge for Central Office Modifications will be assessed per arrangement, per square foot, for both caged and cageless physical Collocation Space. The monthly recurring charge for Common Systems Modifications will be assessed per arrangement, per square foot for cageless physical Collocation Space and on a per cage basis for caged physical Collocation Space. These charges recover the costs associated with preparing the Collocation Space, which includes, but is not limited to, the following items: a survey, engineering of the Collocation Space, and design and modification costs for network, building and support systems.

8.6 Central Office Floor Space. The Floor Space Charge includes reasonable charges for lighting, HVAC, and other allocated expenses associated with maintenance of the BellSouth Premises; however, this charge does not include any expenses associated with AC or DC power supplied to Access Point's Collocation Space for the operation of Access Point's equipment. For caged physical Collocation Space, Access Point shall pay floor space charges based upon the number of square feet enclosed. The minimum size for caged Collocation Space is fifty (50) square feet. Additional caged Collocation Space may be requested in increments of fifty (50) square feet. For cageless Collocation Space, Access Point shall pay floor space charges based upon the following floor space calculation: [(depth of the equipment lineup in which the rack is placed) + (0.5 x maintenance aisle depth) + (0.5 x wiring aisle depth)] x (width of rack and spacers). For purposes of this calculation, the depth of the equipment lineup shall consider the footprint of

equipment racks plus any equipment overhang. BellSouth will assign cageless Collocation Space in conventional equipment rack lineups where feasible. In the event Access Point's collocated equipment requires special cable racking, an isolated ground plane, or any other considerations and treatment which prevents placement within conventional equipment rack lineups, Access Point shall be required to request an amount of floor space sufficient to accommodate the total equipment arrangement.

8.7 Remote Site Bay Space. In a Remote Site, the bay space charge recovers the costs associated with air conditioning, ventilation and other allocated expenses for the maintenance of the Remote Site Location, and includes the amperage necessary to power Access Point's equipment. Access Point shall remit bay space charges based upon the number of bays requested. BellSouth will assign Remote Site Collocation Space in conventional Remote Site bay lineups where feasible.

8.8 Power

8.8.1 In a Central Office BellSouth shall make available -48V DC power for Access Point's Collocation Space at a BellSouth BDFB. When obtaining DC power from a BellSouth BDFB, Access Point's fuses and power cables (for the A & B feeds) must be engineered (sized), and installed by Access Point's BellSouth Certified Supplier, in accordance with the number of fused amps of DC power requested by Access Point on Access Point's Initial Application and any Subsequent Applications. Access Point is also responsible for contracting with a BellSouth Certified Supplier to run the power distribution feeder cable from the BellSouth BDFB to the equipment in Access Point's Collocation Space. The BellSouth Certified Supplier contracted by Access Point must provide BellSouth with a copy of the engineering power specifications prior to the day on which Access Point's equipment becomes operational (hereinafter "Commencement Date"). BellSouth will provide the common power feeder cable support structure between the BellSouth BDFB and Access Point's Collocation Space. Access Point shall contract with a BellSouth Certified Supplier who shall be responsible for performing those power provisioning activities required to enable Access Point's equipment to become operational, which may include, but are not limited to, the installation, removal or replacement of the following: dedicated power cable support structure within Access Point's Collocation Space, power cable feeds and terminations of the power cabling. Access Point and Access Point's BellSouth Certified Supplier shall comply with all applicable NEC, BellSouth TR 73503, Telcordia and ANSI Standards that address power cabling, installation and maintenance.

8.8.1.1 At a Remote Site, BellSouth shall make available -48V DC power for Access Point's Remote Collocation Space at a BDFB within the Remote Site Location. The charge for power shall be assessed as part of the recurring charge for bay space, as referenced in Section 8.7 above. If the power requirements for Access Point's equipment exceed the capacity available, then such additional power requirements shall be assessed on an individual case basis.

8.8.2 In Florida Central Offices only, subject to technical feasibility, commercial availability and safety limitations, BellSouth will permit Access Point to request DC power in five (5) amp increments from five (5) amps up to one hundred (100) amps from the BellSouth BDFB. However, in accordance with industry standard fuse sizing, Access Point may request that BellSouth provision DC power of seventy (70) amps or greater directly from BellSouth's main power board. The industry standard fuse size (which is a circuit breaker on the main power board) available at a BellSouth main power board in all BellSouth Premises is a two hundred twenty-five (225) amp circuit breaker.

8.8.3 BellSouth will revise Access Point's Central Office recurring power charges, in accordance with Section 8.3 above, to reflect a power upgrade when Access Point submits a Subsequent Application requesting an increase in the number of fused amps it is currently receiving from BellSouth for its Collocation Space. If Access Point's existing fuses and power cables (for the A&B power feed) are not sufficient to support the additional number of fused amps requested, Access Point's BellSouth Certified Supplier shall perform whatever activities are necessary, which may include the installation of new/additional fuses or power cables, to comply with the appropriate NEC, BellSouth TR 73503, Telcordia and ANSI Standards, as well as the requirements noted in Sections 8.7 and 8.7.1 above. Access Point's BellSouth Certified Supplier shall provide notification to BellSouth when these activities have been completed.

8.8.4 BellSouth will revise Access Point's Central Office recurring power charges, in accordance with Section 8.3 above, to reflect a power reduction upon BellSouth's receipt of the Power Reduction Form from Access Point, certifying the completion of the power reduction work, including the removal of any associated power cabling by Access Point's BellSouth Certified Supplier. Notwithstanding the foregoing, if Access Point's BellSouth Certified Supplier has not removed or, at BellSouth's discretion, cut the power cabling within thirty (30) days, the power reduction will not become effective until the cabling is removed or, at BellSouth's discretion, cut by Access Point's BellSouth Certified Supplier and Access Point shall pay for the amount of power that had been requested prior to the power reduction request for the period up to the date the power cabling is actually removed.

8.8.5 If Access Point requests an increase or a reduction in the amount of power that BellSouth is currently providing in a Central Office, Access Point must submit a Subsequent Application. In all states other than Florida and Tennessee if no modification to the Collocation Space is requested other than the increase or reduction in power, the Simple Augment fee will apply. In Florida and Tennessee the Power Reconfiguration Only Application Fee as set forth in Exhibit B will apply. If modifications are requested in addition to the increase or reduction of power, the Subsequent Application Fee will apply. BellSouth will bill this nonrecurring fee on the date that BellSouth provides an Application Response to Access Point's Subsequent Application.

8.8.5.1 In Central Offices in Alabama and Louisiana, if Access Point has existing power configurations currently served from the BellSouth main power board and requests that its power be reconfigured to connect to a BellSouth BDFB, in a specific BellSouth Premises, Access Point must submit a Subsequent Application to BellSouth. BellSouth will provide a response to such application within seven (7) days and no Simple Augment Application Fee will be assessed by BellSouth for this one time only power reconfiguration to a BellSouth BDFB. For any power reconfigurations thereafter, Access Point will submit a Subsequent Application and the appropriate Simple Augment Application Fee will apply.

8.8.6 If Access Point elects to install its own DC Power Plant, BellSouth shall provide AC power to feed Access Point's DC Power Plant. Charges for AC power will be assessed on a per breaker ampere, per month basis, pursuant to the rates specified in Exhibit B. The AC power rates include recovery for the provision of commercial and standby AC power. When obtaining power from a BellSouth service panel, protection devices and power cables must be engineered (sized) and installed by Access Point's BellSouth Certified Supplier, with the exception that BellSouth shall engineer and install protection devices and power cables for Adjacent Collocation. Access Point's BellSouth Certified Supplier must provide a copy of the engineering power specifications prior to the Commencement Date. AC power voltage and phase ratings shall be determined on a per location basis. At Access Point's option, Access Point may arrange for AC power in an adjacent collocation arrangement from a retail provider of electrical power.

8.8.7 Access Point shall contract with a BellSouth Certified Supplier to perform the installation and removal of dedicated power cable support structure within Access Point's arrangement and terminations of cable within the Collocation Space.

8.8.8 Fused Amp Billing. In all states, except as otherwise set forth in this Agreement, BellSouth shall make available -48V DC power on a per fused amp, per month basis, pursuant to the following:

For power provisioned from a BDFB. The number of fused amps requested by Access Point on its collocation application for power that is being provisioned from a BellSouth BDFB will be multiplied by the DC power fused amp rate set forth in Exhibit B. A minimum of ten (10) fused amps is required.

For existing power configurations that are provisioned from BellSouth's main power board. The number of fused amps made available at the main power board, in increments of two hundred and twenty-five (225) amps/main power board circuit, will be multiplied by the DC power fused amp rate set forth in Exhibit B.

8.8.9 Florida Power Usage Option

8.8.9.1 In Central Offices in Florida only, Access Point may request that -48 DC power provisioned by BellSouth to Access Point's Collocation Space be assessed per amp, per month based upon amps used, pursuant to the rates set forth in Exhibit B. Monthly recurring power charges will be assessed on the Space Acceptance

Date or Space Ready Date, whichever is appropriate, pursuant to Section 8.3 above. If Access Point desires to convert existing physical collocation arrangements to the Florida Power Usage Option (hereinafter "FL Option"), then the monthly recurring power charges that are applicable to the FL Option, contained in Exhibit B, will be assessed on the Space Ready Date associated with the Subsequent Application submitted by Access Point to convert an existing collocation arrangement to the FL Option. The monthly recurring charges for DC power, under the FL Option, shall be calculated and applied based on the amount of power Access Point requests that it be allowed to draw at a given time to a specific physical collocation arrangement in a particular BellSouth Premises on Access Point's Initial Application or Subsequent Application. BellSouth shall allow Access Point at Access Point's option, to order a power feed that is capable of delivering a higher DC power level but to fuse this power feed so as to allow a power level less than the feed's maximum to be drawn by Access Point. BellSouth is not required to build its central office power infrastructure to meet Access Point's forecasted DC power demand. Access Point must specify on its Initial or Subsequent Application the power level it wishes to be able to draw from BellSouth's power plant for each existing collocation arrangement Access Point converts to the FL Option or for any new collocation arrangements Access Point establishes under the FL Option.

8.8.9.2 BellSouth, at any time and at its own expense, shall have the right to verify the accuracy of Access Point's power usage under the FL Option for a specific collocation arrangement in a particular BellSouth Premises, based on a meter reading(s) taken by BellSouth of the amount of power being consumed by Access Point's collocation arrangement. BellSouth may perform its own meter reading(s) via any method it chooses, such as, but not limited to, a clamp-on ammeter. If the meter reading(s) varies by more than ten percent (10%) or five (5) amps from the power usage that has been requested by Access Point for the collocation arrangement, under the FL Option, the Parties agree to work cooperatively to reconcile such discrepancy and establish the appropriate usage figure in a reasonable and expeditious manner. If the Parties substantiate BellSouth's reading, then BellSouth shall adjust Access Point's billing to reflect BellSouth's power reading beginning with the first day of the month immediately following the date of the last metered reading taken by BellSouth.

8.8.9.3 BellSouth shall assess Access Point a monthly recurring charge for DC power under the FL Option, as set forth in Exhibit B. Access Point shall notify BellSouth of any change in its DC power usage by submitting a Subsequent Application, which reflects the new DC power level desired by Access Point. The requested change in DC power usage will be reflected in Access Point's next scheduled monthly billing cycle.

8.8.10 Tennessee Caged Collocation Power Usage Metering Option. In Central Offices in Tennessee only, Access Point may request that DC power provisioned by BellSouth to Access Point's caged Collocation Space be assessed pursuant to the orders entered by the Tennessee Regulatory Authority in Dockets 97-01262, 99-

00430, and 00-00544 for Collocation for Tennessee. By electing the TRA Option, <customer short name> accepts the TRA rates, terms and conditions of Exhibit C in their entirety in conjunction with the other terms and conditions of Attachment 4.

8.8.11 In Alabama and Louisiana, Access Point has the option to purchase power directly from an electric utility company. Under such option, Access Point is responsible for contracting with the electric utility company for its own power feed and meter and is financially responsible for purchasing all equipment necessary to accomplish the arrangement, including inverters, batteries, power boards, bus bars, BDFBs, backup power supplies and cabling. The actual work to install this arrangement must be performed by a BellSouth Certified Supplier hired by Access Point. Access Point's BellSouth Certified Supplier must comply with all applicable safety codes, including the NEC and National Electric Safety Code (NESC) standards, in the installation of this power arrangement. If Access Point currently has power supplied by BellSouth, Access Point may request to change its Collocation Space to obtain power from an electric utility company by submitting a Subsequent Application. BellSouth will waive the application fee for this Subsequent Application if no other changes are requested therein. Any floor space, cable racking, etc., utilized by Access Point in provisioning said power will be billed by BellSouth on an ICB basis.

8.8.12 In South Carolina, Access Point has the option to purchase power directly from an electric utility company where technically feasible and where space is available in a requested BellSouth Premises. Under such option, Access Point is responsible for contracting with the electric utility company for its own power feed and meter, and is financially responsible for purchasing all equipment necessary to accomplish the conversion of the commercial AC power to DC power, including inverters, batteries, power boards, bus bars, BDFBs, backup power supplies and power cabling. The actual work to install this arrangement must be performed by a BellSouth Certified Supplier hired by Access Point. Access Point's BellSouth Certified Supplier must comply with all applicable national, regional, state and local safety, electrical, fire and building codes, including the NESC standards, in the installing of this power arrangement, just as BellSouth is required to comply with these codes. Access Point must submit an application to BellSouth for the appropriate amount of Collocation Space that Access Point requires in order to install this type of power arrangement. BellSouth will evaluate the request and determine if the appropriate amount of space is available within the BellSouth Premises for the installation of Access Point's power equipment and facilities. This type of power arrangement must be located in an appropriate area in the BellSouth Premises that has been properly conditioned for the installation of power equipment and conforms to the applicable national, regional, state and local safety, electrical, fire and building codes. BellSouth shall waive the application fee or any other nonrecurring charge that would otherwise be due from a CLEC that decides to reconfigure an existing collocation power arrangement so as to purchase power directly from an electric utility company as provided herein. Access Point shall be responsible for the recurring charges

associated with the additional space needed in the BellSouth Premises for this type of power arrangement, including space required to place associated power-related equipment and facilities (i.e., batteries, generator, fuse panel, power meter, etc.). If there is no space available for this type of power arrangement in the requested BellSouth Premises, BellSouth may seek a waiver of these requirements from the Commission for the BellSouth Premises requested. Access Point would have the option to order its power needs directly from BellSouth.

8.9 Central Office Cable Installation. Cable Installation fees will be assessed on a per entrance cable basis. This nonrecurring charge will be billed by BellSouth upon receipt of Access Point's BFFO. Charges for cable racking, cable support structure and entrance fiber structure are recurring fees and will also be assessed according to the rates set forth in Exhibit B.

8.10 Central Office Cable Records. Cable Records charges apply for work activities required to build or remove existing cable records assigned to Access Point in BellSouth's database systems. The VG/DS0 per cable record charge is for a maximum of thirty-six hundred (3,600) records per request. The fiber cable record charge is for a maximum of ninety-nine (99) records per request. Cable Record fees will be assessed as a nonrecurring charge, upon receipt of Access Point's BFFO, in all BellSouth states, except Louisiana. In Louisiana, Cable Record fees will be assessed on a monthly recurring charge basis, upon receipt of Access Point's BFFO. All charges will be assessed the rates set forth in Exhibit B.

8.11 Security Escort. After Access Point has used its one (1) accompanied site visit, pursuant to Section 5.12.1 above, and prior to Access Point's completion of the BellSouth Security Training requirements, contained in Section 12 below, a security escort will be required when Access Point's employees, approved agent, supplier, or Guest(s) desire access to the entrance manhole or a BellSouth Premises. The rates for security escort service are assessed pursuant to the fee schedule contained in Exhibit B, beginning with the scheduled escort time agreed to by the Parties. BellSouth will wait for one-half (1/2) hour after the scheduled escort time to provide such requested escort service and Access Point shall pay for such half-hour charges in the event Access Point's employees, approved agent, supplier or Guest(s) fails to show up for the scheduled escort appointment.

8.12 Other. If no collocation rate element and associated rate is identified in Exhibit B, the Parties, upon request by either Party, will negotiate the rate for the specific collocation service or function identified in this Attachment.

9 Insurance

9.1 Access Point shall, at its sole cost and expense, procure, maintain, and keep in force insurance as specified in this Section and underwritten by insurance companies licensed to do business in the states applicable under this Agreement and having a Best's Insurance Rating of A-.

9.2 Access Point shall maintain the following specific coverage:

9.2.1 Commercial General Liability coverage in the amount of ten million dollars ($10,000,000) or a combination of Commercial General Liability and Excess/Umbrella coverage totaling not less than ten million dollars ($10,000,000). BellSouth shall be named as an Additional Insured on the Commercial General Liability policy as specified herein.

9.2.2 Statutory Workers Compensation coverage and Employers Liability coverage in the amount of one hundred thousand dollars ($100,000) each accident, one hundred thousand dollars ($100,000) each employee by disease, and five hundred thousand dollars ($500,000) policy limit by disease.

9.2.3 All Risk Property coverage on a full replacement cost basis insuring all of Access Point's real and personal property situated on or within a BellSouth Premises.

9.2.4 Access Point may elect to purchase business interruption and contingent business interruption insurance, having been advised that BellSouth assumes no liability for loss of profit or revenues should an interruption of service occur.

9.3 The limits set forth in Section 9.2 above may be increased by BellSouth from time to time during the term of this Agreement, upon thirty (30) days notice to Access Point, to at least such minimum limits as shall then be customary with respect to comparable occupancy of BellSouth structures.

9.4 All policies purchased by Access Point shall be deemed to be primary and not contributing to or in excess of any similar coverage purchased by BellSouth. All insurance must be in effect on or before the date equipment is delivered to BellSouth's Premises and shall remain in effect for the term of this Agreement or until all of Access Point's property has been removed from BellSouth's Premises, whichever period is longer. If Access Point fails to maintain required coverage, BellSouth may pay the premiums thereon and seek reimbursement of same from Access Point.

9.5 Access Point shall submit certificates of insurance reflecting the coverage required pursuant to this Section within a minimum of ten (10) business days prior to the commencement of any work in the Collocation Space. Failure to meet this interval may result in construction and equipment installation delays. Access Point shall arrange for BellSouth to receive thirty (30) business days' advance notice of cancellation or non-renewal from Access Point's insurance company. Access Point shall forward a certificate of insurance and notice of cancellation/non-renewal to BellSouth at the following address:

BellSouth Telecommunications, Inc.
Attn: Rick Management Office – Finance
17F54 BellSouth Center
675 W. Peachtree Street
Atlanta, GA 30375

9.6 Access Point must conform to recommendations made by BellSouth's fire insurance company to the extent BellSouth has agreed to, or shall hereafter agree to, such recommendations.

9.7 Self Insurance. If Access Point's net worth exceeds five hundred million dollars ($500,000,000), Access Point may elect to request self-insurance status in lieu of obtaining any of the insurance required in Section 9.2 above. Access Point shall provide audited financial statements to BellSouth thirty (30) days prior to the commencement of any work in the Collocation Space. BellSouth shall then review such audited financial statements and respond in writing to Access Point in the event that self-insurance status is not granted to Access Point. If BellSouth approves Access Point for self-insurance, Access Point shall annually furnish to BellSouth, and keep current, evidence of such net worth that is attested to by one of Access Point's corporate officers. The ability to self-insure shall continue so long as Access Point meets all of the requirements of this Section. If Access Point subsequently no longer satisfies the requirements of this Section, Access Point is required to purchase insurance as indicated by Section 9.2 above.

9.8 The net worth requirements set forth in Section 9.7 above may be increased by BellSouth from time to time during the term of this Agreement upon thirty (30) days' notice to Access Point to at least such minimum limits as shall then be customary with respect to comparable occupancy of a BellSouth Premises.

9.9 Failure to comply with the provisions of this Section will be deemed a material breach of this Attachment.

10 Mechanics Lien

10.1 If any mechanics lien or other liens are filed against property of either Party (BellSouth or Access Point), or any improvement thereon by reason of or arising out of any labor or materials furnished or alleged to have been furnished or to be furnished to or for the other Party or by reason of any changes, or additions to said property made at the request or under the direction of the other Party, the other Party directing or requesting those changes shall, within thirty (30) business days after receipt of written notice from the Party against whose property said lien has been filed, either pay such lien or cause the same to be bonded off the affected property in the manner provided by law. The Party causing said lien to be placed against the property of the other shall also defend at its sole cost and expense, on behalf of the other, any action, suit or proceeding which may be brought for the enforcement of such liens and shall pay any damage and discharge any judgment entered thereon.

11 Inspections

11.1 BellSouth may conduct an inspection of Access Point's equipment and facilities in Access Point's Collocation Space(s) prior to the activation of facilities and/or services between Access Point's equipment and equipment of BellSouth. BellSouth may conduct an inspection if Access Point adds equipment and may otherwise conduct routine inspections at reasonable intervals mutually agreed upon by the Parties. BellSouth shall provide Access Point with a minimum of

forty-eight (48) hours or two (2) business days, whichever is greater, advance notice of all such inspections. All costs of such inspections shall be borne by BellSouth.

12 Security and Safety Requirements

12.1 Unless otherwise specified, Access Point will be required, at its own expense, to conduct a statewide investigation of criminal history records for each Access Point employee hired in the past five (5) years being considered for work on a BellSouth Premises, for the states/counties where the Access Point employee has worked and lived for the past five (5) years. Where state law does not permit statewide collection or reporting, an investigation of the applicable counties is acceptable. Access Point shall not be required to perform this investigation if an affiliated company of Access Point has performed an investigation of the Access Point employee seeking access, if such investigation meets the criteria set forth above. This requirement will not apply if Access Point has performed a pre-employment statewide investigation of criminal history records of the Access Point employee for the states/counties where the Access Point employee has worked and lived for the past five (5) years or, where state law does not permit a statewide investigation, an investigation of the applicable counties.

12.2 Access Point will be required to administer to its personnel assigned to the BellSouth Premises security training either provided by BellSouth, or meeting criteria defined by BellSouth at BellSouth's Interconnection Web site, www.interconnection.bellsouth.com/guides.

12.3 Access Point shall provide its employees and agents with picture identification, which must be worn and visible at all times while in Access Point's Collocation Space or other areas in or around the BellSouth Premises. The photo identification card shall bear, at a minimum, the employee's name and photo and Access Point's name. BellSouth reserves the right to remove from a BellSouth Premises any employee of Access Point not possessing identification issued by Access Point or who has violated any of BellSouth's policies as outlined in the CLEC Security Training documents. Access Point shall hold BellSouth harmless for any damages resulting from such removal of Access Point's personnel from a BellSouth Premises. Access Point shall be solely responsible for ensuring that any Guest(s) of Access Point is in compliance with all subsections of this Section.

12.4 Access Point shall not assign to the BellSouth Premises any personnel with records of felony criminal convictions. Access Point shall not assign to the BellSouth Premises any personnel with records of misdemeanor convictions, except for misdemeanor traffic violations, without advising BellSouth of the nature and gravity of the offense(s). BellSouth reserves the right to refuse building access to any of Access Point's personnel who have been identified to have misdemeanor criminal convictions. Notwithstanding the foregoing, in the event Access Point chooses not to advise BellSouth of the nature and gravity of any misdemeanor conviction, Access Point may, in the alternative, certify to

BellSouth that it shall not assign to the BellSouth Premises any personnel with records of misdemeanor convictions (other than misdemeanor traffic violations).

12.4.1 Access Point shall not knowingly assign to the BellSouth Premises any individual who was a former employee of BellSouth and whose employment with BellSouth was terminated for a criminal offense, whether or not BellSouth sought prosecution of the individual for the criminal offense.

12.4.2 Access Point shall not knowingly assign to the BellSouth Premises any individual who was a former supplier of BellSouth and whose access to a BellSouth Premises was revoked due to the commission of a criminal offense, whether or not BellSouth sought prosecution of the individual for the criminal offense.

12.5 For each Access Point employee or agent hired by Access Point within the last five (5) years, who requires access to a BellSouth Premises to perform work in Access Point Collocation Space(s), Access Point shall furnish BellSouth certification that the aforementioned background check and security training were completed. This certification must be provided to and approved by BellSouth before an employee or agent will be granted such access to a BellSouth Premises. The certification will contain a statement that no felony convictions were found and certify that the employee completed the security training. If the employee's criminal history includes misdemeanor convictions, Access Point will disclose the nature of the convictions to BellSouth at that time. In the alternative, Access Point may certify to BellSouth that it shall not assign to the BellSouth Premises any personnel with records of misdemeanor convictions, other than misdemeanor traffic violations.

12.5.1 For all other Access Point employees requiring access to a BellSouth Premises pursuant to this Attachment, Access Point shall furnish BellSouth, prior to an employee gaining such access, a certification that the employee is not subject to the requirements of Section 12.5 above and that security training was completed by the employee.

12.6 At BellSouth's request, Access Point shall promptly remove from the BellSouth Premises any employee of Access Point that BellSouth does not wish to grant access to a BellSouth Premises: 1) pursuant to any investigation conducted by BellSouth, or 2) prior to the initiation of an investigation if an employee of Access Point is found interfering with the property or personnel of BellSouth or another collocated telecommunications carrier, provided that an investigation shall be promptly commenced by BellSouth.

12.7 Security Violations. BellSouth reserves the right to interview Access Point's employees, agents, suppliers, or Guests in the event of wrongdoing in or around a BellSouth Premises or involving BellSouth's or another collocated telecommunications carrier's property or personnel, provided that BellSouth shall provide reasonable notice to Access Point's Security representative of such interview. Access Point and its employees, agents, suppliers, or Guests shall reasonably cooperate with BellSouth's investigation into allegations of wrongdoing or criminal conduct committed by, witnessed by, or involving Access

Point's employees, agents, suppliers, or Guests. Additionally, BellSouth reserves the right to bill Access Point for all reasonable costs associated with investigations involving its employees, agents, suppliers, or Guests if it is established and mutually agreed in good faith that Access Point's employees, agents, suppliers, or Guests are responsible for the alleged act(s). BellSouth shall bill Access Point for BellSouth property, which is stolen or damaged, where an investigation determines the culpability of Access Point's employees, agents, suppliers, or Guests and where Access Point agrees, in good faith, with the results of such investigation. Access Point shall notify BellSouth in writing immediately in the event that Access Point discovers one of its employees, agents, suppliers, or Guests already working on the BellSouth Premises is a possible security risk. Upon request of the other Party, the Party who is the employer shall discipline consistent with its employment practices, up to and including removal from BellSouth's Premises, any employee found to have violated the security and safety requirements of this Section. Access Point shall hold BellSouth harmless for any damages resulting from such removal of Access Point's personnel from a BellSouth Premises.

12.8 Use of Supplies. Unauthorized use of equipment, supplies or other property by either Party, whether or not used routinely to provide telephone service will be strictly prohibited and handled appropriately. Costs associated with such unauthorized use may be charged to the offending Party, as may be all associated investigative costs.

12.9 Use of Official Lines. Except for non-toll calls necessary in the performance of their work, neither Party shall use the telephone(s) of the other Party on BellSouth's Premises. Charges for unauthorized telephone calls may be charged to the offending Party, as may be all associated investigative costs.

12.10 Accountability. Full compliance with the Security requirements of this Section shall in no way limit the accountability of either Party to the other for the improper actions of its employees, agents, suppliers, or Guests.

13 Destruction of Collocation Space

13.1 In the event a Collocation Space is wholly or partially damaged by fire, windstorm, hurricane, tornado, flood or by similar force majeure circumstances to such an extent as to be rendered wholly unsuitable for Access Point's permitted use hereunder, then either Party may elect within ten (10) days after such damage, to terminate occupancy of the damaged Collocation Space, and if either Party shall so elect, by giving the other written notice of termination, both Parties shall stand released of and from further liability under the terms hereof. If the Collocation Space shall suffer only minor damage and shall not be rendered wholly unsuitable for Access Point's permitted use, or is damaged and the option to terminate is not exercised by either Party, BellSouth covenants and agrees to proceed promptly without expense to Access Point, except for improvements not to the property of BellSouth, to repair the damage. BellSouth shall have a reasonable time within which to rebuild or make any repairs, and such rebuilding

and repairing shall be subject to delays caused by storms, shortages of labor and materials, government regulations, strikes, walkouts, and causes beyond the control of BellSouth, which causes shall not be construed as limiting factors, but as exemplary only. Access Point may, at its own expense, accelerate the rebuild of its Collocation Space and equipment provided, however, that a BellSouth Certified Supplier is used and the necessary space preparation has been completed. If Access Point's acceleration of the project increases the cost of the project, then those additional charges will be incurred at Access Point's expense. Where allowed and where practical, Access Point may erect a temporary facility while BellSouth rebuilds or makes repairs. In all cases where the Collocation Space shall be rebuilt or repaired, Access Point shall be entitled to an equitable abatement of rent and other charges, depending upon the unsuitability of the Collocation Space for Access Point's permitted use, until such Collocation Space is fully repaired and restored and Access Point's equipment installed therein (but in no event later than thirty (30) days after the Collocation Space is fully repaired and restored). Where Access Point has placed an Adjacent Arrangement pursuant to Section 3.4 above, Access Point shall have the sole responsibility to repair or replace said Adjacent Arrangement provided herein. Pursuant to this Section, BellSouth will restore the associated services to the Adjacent Arrangement.

14 Eminent Domain

14.1 If the whole of a Collocation Space or Adjacent Arrangement shall be taken by any public authority under the power of eminent domain, then this Attachment shall terminate with respect to such Collocation Space or Adjacent Arrangement as of the date possession shall be taken by such public authority and rent and other charges for the Collocation Space or Adjacent Arrangement shall be paid up to that day with a proportionate refund by BellSouth of such rent and charges as may have been paid in advance for a period subsequent to the date of the taking. If any part of the Collocation Space or Adjacent Arrangement shall be taken under eminent domain, BellSouth and Access Point shall each have the right to terminate this Attachment with respect to such Collocation Space or Adjacent Arrangement and declare the same null and void, by written notice of such intention to the other Party within ten (10) days after such taking.

15 Nonexclusivity

15.1 Access Point understands that this Attachment is not exclusive and that BellSouth may enter into similar agreements with other Parties. Assignment of Collocation Space pursuant to all such agreements shall be determined by space availability and made on a first come, first serve basis.

ENVIRONMENTAL AND SAFETY PRINCIPLES

The following principles provide basic guidance on environmental and safety issues when applying for and establishing physical collocation arrangements.

1. General Principles

1.1 Compliance with Applicable Law. BellSouth and Access Point agree to comply with applicable federal, state, and local environmental and safety laws and regulations including U.S. Environmental Protection Agency (USEPA) regulations issued under the Clean Air Act (CAA), Clean Water Act (CWA), Resource Conservation and Recovery Act (RCRA), Comprehensive Environmental Response, Compensation and Liability Act (CERCLA), Superfund Amendments and Reauthorization Act (SARA), the Toxic Substances Control Act (TSCA), and Occupational Safety and Healthy Act (OSHA) regulations issued under the OSHA of 1970, as amended and National Fire Protection Association (NFPA), NEC and NESC (Applicable Laws) requirements. Each Party shall notify the other if compliance inspections are conducted by regulatory agencies and/or citations are issued that relate to any aspect of this Attachment.

1.2 Notice. BellSouth and Access Point shall provide notice to the other, including any Material Safety Data Sheets (MSDSs), of known and recognized physical hazards or Hazardous Chemicals existing on site or brought on site. A Hazardous Chemical inventory list is posted on an OSHA Poster and updated annually at each Central Office. This Poster is normally located near the front entrance of the building or in the lounge area. Each Party is required to provide specific notice for known potential Imminent Danger conditions. Access Point should contact 1-800-743-6737 for any BellSouth MSDS required.

1.3 Practices/Procedures. BellSouth may make available additional environmental control procedures for Access Point to follow when working at a BellSouth Premises (See Section 2, below). These practices/procedures will represent the regular work practices required to be followed by the employees and suppliers of BellSouth for environmental protection. Access Point will require its suppliers, agents, Guests, and others accessing the BellSouth Premises to comply with these practices. Section 2 below lists the Environmental categories where BellSouth practices should be followed by Access Point when operating in the BellSouth Premises.

1.4 Environmental and Safety Inspections. BellSouth reserves the right to inspect the Access Point space with proper notification. BellSouth reserves the right to stop any Access Point work operation that imposes Imminent Danger to the environment, employees or other persons in or around a BellSouth Premises.

1.5 Hazardous Materials Brought On Site. Any hazardous materials brought into, used, stored or abandoned at a BellSouth Premises by Access Point are owned by and considered the property of Access Point. Access Point will indemnify

BellSouth for claims, lawsuits or damages to persons or property caused by these materials. Without prior written BellSouth approval, no substantial new safety or environmental hazards can be created by Access Point or different hazardous materials used by Access Point at a BellSouth Premises. Access Point must demonstrate adequate emergency response capabilities for the materials used by Access Point or remaining at a BellSouth Premises.

1.6 Spills and Releases. When contamination is discovered at a BellSouth Premises, either Party discovering the condition must notify the other Party. All Spills or Releases of regulated materials will immediately be reported by Access Point to BellSouth.

1.7 Coordinated Environmental Plans and Permits. BellSouth and Access Point will coordinate plans, permits or information required to be submitted to government agencies, such as emergency response plans, spill prevention control and countermeasures (SPCC) plans and community reporting. If fees are associated with filing, BellSouth and Access Point will develop a cost sharing procedure. If BellSouth's permit or EPA identification number must be used, Access Point must comply with all of BellSouth's permit conditions and environmental processes, including environmental "best management practices (BMP)" (see Section 2, below) and the selection of BST disposition vendors and disposal sites.

1.8 Environmental and Safety Indemnification. BellSouth and Access Point shall indemnify, defend and hold harmless the other Party from and against any claims (including, without limitation, third-party claims for personal injury or death or real or personal property damage), judgments, damages (including direct and indirect damages and punitive damages), penalties, fines, forfeitures, costs, liabilities, interest and losses arising in connection with the violation or alleged violation of any Applicable Law or contractual obligation or the presence or alleged presence of contamination arising out of the acts or omissions of the indemnifying Party, its employees, agents, suppliers, or Guests concerning its operations at a BellSouth Premises.

2. Categories for Consideration of Environmental Issues

2.1 When performing functions that fall under the following Environmental categories on BellSouth's Premises, Access Point agrees to comply with the applicable sections of the current issue of BellSouth's Environmental and Safety Methods and Procedures (M&Ps), incorporated herein by this reference. Access Point further agrees to cooperate with BellSouth to ensure that Access Point's employees, agents, suppliers and/or Guests are knowledgeable of and satisfy those provisions of BellSouth's Environmental M&Ps, which apply to the specific Environmental function being performed by Access Point, its employees, agents, suppliers, and/or Guests.

2.2 The most current version of the reference documentation must be requested from Access Point's BellSouth Regional Contract Manager (RCM).

Environmental Categories	Environmental Issues	Addressed By The Following Documentation
Disposal of hazardous material or other regulated material (e.g., batteries, fluorescent tubes, solvents & cleaning materials)	Compliance with all applicable local, state & federal laws and regulations Pollution liability insurance EVET approval of supplier	Std T&C 450 Fact Sheet Series 17000 Std T&C 660-3 Approved Environmental Vendor List (Contact RCM Representative)
Emergency response	Hazmat/waste release/spill fire safety emergency	Fact Sheet Series 17000 Building Emergency Operations Plan (EOP) (specific to and located on BellSouth's Premises)
Contract labor/outsourcing for services with environmental implications to be performed on BellSouth Premises (e.g., disposition of hazardous material/waste; maintenance of storage tanks)	Compliance with all applicable local, state and federal laws and regulations Performance of services in accordance with BST's environmental M&Ps Insurance	Std T&C 450 Std T&C 450-B (Contact RCM Representative for copy of appropriate E/S M&Ps.) Std T&C 660
Transportation of hazardous material	Compliance with all applicable local, state & federal laws and regulations Pollution liability insurance EVET approval of supplier	Std T&C 450 Fact Sheet Series 17000 Std T&C 660-3 Approved Environmental Vendor List (Contact RCM Representative)
Maintenance/operations work which may produce a waste Other maintenance work	Compliance with all applicable local, state & federal laws and regulations Protection of BST employees and equipment	Std T&C 450 29 C.F.R. § 1910.147 (OSHA Standard) 29 C.F.R. § 1910 Subpart O (OSHA Standard)

Janitorial service	All waste removal and disposal must conform to all applicable federal, state and local regulations All Hazardous Material and Waste Asbestos notification and protection of employees and equipment	Procurement Manager (CRES Related Matters)-BST Supply Chain Services Fact Sheet Series 17000 GU-BTEN-001BT, Chapter 3 BSP 010-170-001BS (Hazcom)
Manhole cleaning	Compliance with all applicable local, state & federal laws and regulations Pollution liability insurance EVET approval of supplier	Std T&C 450 Fact Sheet 14050 BSP 620-145-011PR Issue A, August 1996 Std T&C 660-3 Approved Environmental Vendor List (Contact RCM Representative)
Removing or disturbing building materials that may contain asbestos	Asbestos work practices	GU-BTEN-001BT, Chapter 3 for questions regarding removing or disturbing materials that contain asbestos, call the BellSouth Building Service Center: AL, MS, TN, KY & LA (local area code) 557-6194 FL, GA, NC & SC (local area code) 780-2740

3. Definitions

Generator. Under RCRA, the person whose act produces a Hazardous Waste, as defined in 40 C.F.R. § 261, or whose act first causes a Hazardous Waste to become subject to regulation. The Generator is legally responsible for the proper management and disposal of Hazardous Wastes in accordance with regulations.

Hazardous Chemical. As defined in the U.S. OSHA hazard communications standard (29 C.F.R. § 1910.1200), any chemical which is a health hazard or physical hazard.

Hazardous Waste. As defined in Section 1004 of RCRA.

Imminent Danger. Any conditions or practices at a BellSouth Premises which are such that a danger exists which could reasonably be expected to cause immediate death or serious harm to people or immediate significant damage to the environment or natural resources.

Spill or Release. As defined in Section 101 of CERCLA.

4. Acronyms

RCM – Regional Collocation Manager (f/k/a Account Team Collocation Coordinator)

BST – BellSouth Telecommunications

CRES – Corporate Real Estate and Services (formerly PS&M)

DEC/LDEC – Department Environmental Coordinator/Local Department Environmental Coordinator

E/S – Environmental/Safety

EVET – Environmental Vendor Evaluation Team

GU-BTEN-001BT – BellSouth Environmental Methods and Procedures

NESC – National Electrical Safety Codes

P&SM – Property & Services Management

Std T&C – Standard Terms & Conditions

COLLOCATION - Alabama														Attachment 4 Exh: B			
CATEGORY		RATE ELEMENTS	Interim	Zone	BCS	USOC	RATES($)					Svc Order Submitted Elec per LSR	Svc Order Submitted Manually per LSR	Incremental Charge - Manual Svc Order vs. Electronic-1st	Incremental Charge - Manual Svc Order vs. Electronic-Add'l	Incremental Charge - Manual Svc Order vs. Electronic-Disc 1st	Incremental Charge - Manual Svc Order vs. Electronic-Disc Add'l
							Rec	Nonrecurring		Nonrecurring Disconnect		OSS Rates($)					
								First	Add'l	First	Add'l	SOMEC	SOMAN	SOMAN	SOMAN	SOMAN	SOMAN
PHYSICAL COLLOCATION																	
	Application																
		Physical Collocation - Initial Application Fee			CLO	PE1BA		1,879.48		0.51							
		Physical Collocation - Subsequent Application Fee			CLO	PE1CA		1,566.60		0.51							
		Physical Collocation - Co-Carrier Cross Connects/Direct Connect, Application Fee, per application			CLO	PE1DT		584.22									
		Physical Collocation Administrative Only - Application Fee			CLO	PE1BL		742.15									
		Physical Collocation - Application Cost, Simple Augment			CLO	PE1KS		594.41		1.21							
		Physical Collocation - Application Cost, Minor Augment			CLO	PE1KM		833.47		1.21							
		Physical Collocation - Application Cost, Intermediate Augment			CLO	PE1K1		1,058.00		1.21							
		Physical Collocation - Application Cost - Major Augment			CLO	PE1KJ		2,410.00		1.21							
	Space Preparation																
		Physical Collocation - Floor Space, per sq feet			CLO	PE1PJ	3.22										
		Physical Collocation - Space Enclosure, welded wire, first 50 square feet			CLO	PE1BX	140.99										
		Physical Collocation - Space enclosure, welded wire, first 100 square feet			CLO	PE1BW	156.33										
		Physical Collocation - Space enclosure, welded wire, each additional 50 square feet			CLO	PE1CW	15.34										
		Physical Collocation - Space Preparation - C.O. Modification per square ft.			CLO	PE1SK	1.96										
		Physical Collocation - Space Preparation, Common Systems Modifications-Cageless, per square foot			CLO	PE1SL	2.62										
		Physical Collocation - Space Preparation - Common Systems Modifications-Caged, per cage			CLO	PE1SM	88.86										
		Physical Collocation - Space Preparation - Firm Order Processing			CLO	PE1SJ		600.71									
		Physical Collocation - Space Availability Report, per Central Office Requested			CLO	PE1SR		1,075.17									
	Power																
		Physical Collocation - Power, -48V DC Power - per Fused Amp Requested			CLO	PE1PL	7.83										
		Physical Collocation - Power, 120V AC Power, Single Phase, per Breaker Amp			CLO	PE1FB	4.91										
		Physical Collocation - Power, 240V AC Power, Single Phase, per Breaker Amp			CLO	PE1FD	9.84										
		Physical Collocation - Power, 120V AC Power, Three Phase, per Breaker Amp			CLO	PE1FE	14.74										
		Physical Collocation - Power, 277V AC Power, Three Phase, per Breaker Amp			CLO	PE1FG	34.06										
	Cross Connects (Cross Connects, Co-Carrier Cross Connects, and Ports)																
		Physical Collocation - 2-wire cross-connect, loop, provisioning			UEANL,UEQ, UNCNX, UEA, UCL, UAL, UHL, UDN, UNCVX	PE1P2	0.03	12.30	11.80	6.03	5.44						
		Physical Collocation - 4-wire cross-connect, loop, provisioning			UEA, UHL, UNCVX, UNCDX, UCL, UDL	PE1P4	0.05	12.39	11.87	6.39	5.73						
		Physical Collocation -DS1 Cross-Connect for Physical Collocation, provisioning			WDS1L, WDS1S, UXTD1, ULDD1, USLEL, UNLD1, U1TD1, UNC1X, UEPSR, UEPSB, UEPSE, UEPSP, USL, UEPEX, UEPDX	PE1P1	1.11	22.03	15.93	6.40	5.79						

COLLOCATION - Alabama														Attachment 4 Exh: B			
CATEGORY		RATE ELEMENTS	Interim	Zone	BCS	USOC	RATES($)					Svc Order Submitted Elec per LSR	Svc Order Submitted Manually per LSR	Incremental Charge - Manual Svc Order vs. Electronic-1st	Incremental Charge - Manual Svc Order vs. Electronic-Add'l	Incremental Charge - Manual Svc Order vs. Electronic-Disc 1st	Incremental Charge - Manual Svc Order vs. Electronic-Disc Add'l
								Nonrecurring		Nonrecurring Disconnect		OSS Rates($)					
							Rec	First	Add'l	First	Add'l	SOMEC	SOMAN	SOMAN	SOMAN	SOMAN	SOMAN
		Physical Collocation - DS3 Cross-Connect, provisioning			UE3, U1TD3, UXTD3, UXTS1, UNC3X, UNCSX, ULDD3, U1TS1, ULDS1, UNLD3, UEPEX, UEPDX, UEPSR, UEPSB, UEPSE, UEPSP	PE1P3	14.16	20.89	15.20	7.38	5.92						
		Physical Collocation - 2-Fiber Cross-Connect			CLO, ULDO3, ULD12, ULD48, U1TO3, U1T12, U1T48, UDLO3, UDL12, UDF	PE1F2	2.81	20.89	15.20	7.38	5.92						
		Physical Collocation - 4-Fiber Cross-Connect			ULDO3, ULD12, ULD48, U1TO3, U1T12, U1T48, UDLO3, UDL12, UDF, UDFCX	PE1F4	4.99	25.55	19.86	9.71	8.25						
		Physical Collocation - Co-Carrier Cross Connects/Direct Connect - Fiber Cable Support Structure, per linear foot, per Cable.			CLO	PE1ES	0.0011										
		Physical Collocation - Co-Carrier Cross Connect/Direct Connect - Copper/Coax Cable Support Structure, per linear foot, per cable.			CLO	PE1DS	0.0016										
		Physical Collocation 2-Wire Cross Connect, Port			UEPSR, UEPSP, UEPSE, UEPSB, UEPSX, UEP2C	PE1R2	0.03	12.30	11.80	6.03	5.44						
		Physical Collocation 4-Wire Cross Connect, Port			UEPEX, UEPDD	PE1R4	0.05	12.39	11.87	6.39	5.73						
	Security																
		Physical Collocation - Security Escort for Basic Time - normally scheduled work, per half hour			CLO	PE1BT		16.93	10.73								
		Physical Collocation - Security Escort for Overtime - outside of normally scheduled working hours on a scheduled work day, per half hour			CLO	PE1OT		22.05	13.86								
		Physical Collocation - Security Escort for Premium Time - outside of scheduled work day, per half hour			CLO	PE1PT		27.17	16.98								
		Physical Collocation - Security Access System - Security System per Central Office			CLO	PE1AX	45.70										
		Physical Collocation -Security Access System - New Card Activation, per Card Activation (First), per State			CLO	PE1A1	0.05	27.79									
		Physical Collocation-Security Access System-Administrative Change, existing Access Card, per Request, per State, per Card			CLO	PE1AA		7.79									
		Physical Collocation - Security Access System - Replace Lost or Stolen Card, per Card			CLO	PE1AR		22.78									
		Physical Collocation - Security Access - Initial Key, per Key			CLO	PE1AK		13.10									
		Physical Collocation - Security Access - Key, Replace Lost or Stolen Key, per Key			CLO	PE1AL		13.10									
	CFA																
		Physical Collocation - CFA Information Resend Request, per premises, per arrangement, per request			CLO	PE1C9		77.56									
	Cable Records - Note: The rates in the First & Additional columns will actually be billed as "Initial I" and "Subsequent S" respectively																
		Physical Collocation - Cable Records, per request			CLO	PE1CR		I 759.29	S 488.11	133.00							
		Physical Collocation, Cable Records, VG/DS0 Cable, per cable record (maximum 3600 records)			CLO	PE1CD		326.92		189.12							
		Physical Collocation, Cable Records, VG/DS0 Cable, per each 100 pair			CLO	PE1CO		4.81		5.90							
		Physical Collocation, Cable Records, DS1, per T1 TIE			CLO	PE1C1		2.25		2.76							
		Physical Collocation, Cable Records, DS3, per T3 TIE			CLO	PE1C3		7.88		9.66							

COLLOCATION - Alabama														Attachment 4 Exh: B			
CATEGORY		RATE ELEMENTS	Interim	Zone	BCS	USOC	RATES($)					Svc Order Submitted Elec per LSR	Svc Order Submitted Manually per LSR	Incremental Charge - Manual Svc Order vs. Electronic-1st	Incremental Charge - Manual Svc Order vs. Electronic-Add'l	Incremental Charge - Manual Svc Order vs. Electronic-Disc 1st	Incremental Charge - Manual Svc Order vs. Electronic-Disc Add'l
							Rec	Nonrecurring		Nonrecurring Disconnect		OSS Rates($)					
								First	Add'l	First	Add'l	SOMEC	SOMAN	SOMAN	SOMAN	SOMAN	SOMAN
		Physical Collocation - Cable Records, Fiber Cable, per cable record (maximum 99 records)			CLO	PE1CB		84.49		77.13							
		Physical Collocation, Cable Records,CAT5/RJ45			CLO	PE1C5		2.25		2.76							
	Virtual to Physical																
		Physical Collocation - Virtual to Physical Collocation Relocation, per Voice Grade Circuit			CLO	PE1BV		33.00									
		Physical Collocation - Virtual to Physical Collocation Relocation, per DSO Circuit			CLO	PE1BO		33.00									
		Physical Collocation - Virtual to Physical Collocation Relocation, per DS1 Circuit			CLO	PE1B1		52.00									
		Physical Collocation - Virtual to Physical Collocation Relocation, per DS3 Circuit			CLO	PE1B3		52.00									
		Physical Collocation - Virtual to Physical Collocation In-Place, Per Voice Grade Circuit			CLO	PE1BR		22.44									
		Physical Collocation Virtual to Physical Collocation In-Place, Per DSO Circuit			CLO	PE1BP		22.44									
		Physical Collocation - Virtual to Physical Collocation In-Place, Per DS1 Circuit			CLO	PE1BS		32.62									
		Physical Collocation - Virtual to Physical Collocation In-Place, per DS3 Circuit			CLO	PE1BE		32.62									
	Entrance Cable																
		Physical Collocation - Fiber Cable Installation, Pricing, non-recurring charge, per Entrance Cable			CLO	PE1BD		859.71		22.49							
		Physical Collocation - Fiber Cable Support Structure, per Entrance Cable			CLO	PE1PM	17.11										
		Physical Collocation - Fiber Entrance Cable Installation, per Fiber			CLO	PE1ED		3.87									
VIRTUAL COLLOCATION																	
	Application																
		Virtual Collocation - Application Fee			AMTFS	EAF		1,205.26		0.51							
		Virtual Collocation - Co-Carrier Cross Connects/Direct Connect, Application Fee, per application			AMTFS	VE1CA		584.22									
		Virtual Collocation Administrative Only - Application Fee			AMTFS	VE1AF		742.15									
	Space Preparation																
		Virtual Collocation - Floor Space, per sq. ft.			AMTFS	ESPVX	3.22										
	Power																
		Virtual Collocation - Power, per fused amp			AMTFS	ESPAX	7.83										
	Cross Connects (Cross Connects, Co-Carrier Cross Connects, and Ports)																
		Virtual Collocation - 2-wire cross-connect, loop, provisioning			UEANL, UEA, UDN, UAL, UHL, UCL, UEQ, UNCVX, UNCDX, UNCNX	UEAC2	0.03	12.30	11.80	6.03	5.44						
		Virtual Collocation - 4-wire cross-connect, loop, provisioning			UEA, UHL, UCL, UDL, UNCVX, UNCDX	UEAC4	0.05	12.39	11.87	6.39	5.73						
		Virtual collocation - Special Access & UNE, cross-connect per DS1			ULR, UXTD1, UNC1X, ULDD1, U1TD1, USLEL, UNLD1, USL, UEPEX, UEPDX	CNC1X	1.11	22.03	15.93	6.40	5.79						
		Virtual collocation - Special Access & UNE, cross-connect per DS3			USL, UE3, U1TD3, UXTS1, UXTD3, UNC3X, UNCSX, ULDD3, U1TS1, ULDS1, UDLSX, UNLD3	CND3X	14.16	20.89	15.20	7.38	5.92						

COLLOCATION - Alabama

Attachment 4 Exh: B

CATEGORY	RATE ELEMENTS	Interim	Zone	BCS	USOC	RATES($) Rec	Nonrecurring First	Nonrecurring Add'l	Nonrecurring Disconnect First	Nonrecurring Disconnect Add'l	Svc Order Submitted Elec per LSR SOMEC	Svc Order Submitted Manually per LSR SOMAN	Incremental Charge - Manual Svc Order vs. Electronic- 1st SOMAN	Incremental Charge - Manual Svc Order vs. Electronic- Add'l SOMAN	Incremental Charge - Manual Svc Order vs. Electronic- Disc 1st SOMAN	Incremental Charge - Manual Svc Order vs. Electronic- Disc Add'l SOMAN
							OSS Rates($)									
	Virtual Collocation - 2-Fiber Cross Connects			UDL12, UDLO3, U1T48, U1T12, U1TO3, ULDO3, ULD12, ULD48, UDF	CNC2F	2.84	20.89	15.20	7.38	5.92						
	Virtual Collocation - 4-Fiber Cross Connects			UDL12, UDLO3, U1T48, U1T12, U1TO3, ULDO3, ULD12, ULD48, UDF	CNC4F	5.69	25.55	19.86	9.71	8.25						
	Virtual Collocation - Co-Carrier Cross Connects/Direct Connect - Fiber Cable Support Structure, per linear foot, per cable			AMTFS	VE1CB	0.0011										
	Virtual Collocation - Co-Carrier Cross Connects/Direct Connect - Copper/Coax Cable Support Structure, per linear foot, per cable			AMTFS	VE1CD	0.0016										
	Virtual Collocation 2-Wire Cross Connect, Port			UEPSX, UEPSB, UEPSE, UEPSP, UEPSR, UEP2C	VE1R2	0.03	12.30	11.80	6.03	5.44						
	Virtual Collocation 4-Wire Cross Connect, Port			UEPDD, UEPEX	VE1R4	0.05	12.39	11.87	6.39	5.73						
CFA																
	Virtual Collocation - CFA Information Resend Request, per Premises, per Arrangement, per request			AMTFS	VE1QR		77.56									
Cable Records - Note: The rates in the First & Additional columns will actually be billed as "Initial I" & "Subsequent S" respectively																
	Virtual Collocation Cable Records - per request			AMTFS	VE1BA		I 759.29	S 488.11	133.00							
	Virtual Collocation Cable Records - VG/DS0 Cable, per cable record			AMTFS	VE1BB		326.92		189.12							
	Virtual Collocaiton Cable Records - VG/DS0 Cable, per each 100 pair			AMTFS	VE1BC		4.81		5.90							
	Virtual Collocation Cable Records - DS1, per T1TIE			AMTFS	VE1BD		2.25		2.76							
	Virtual Collocation Cable Records - DS3, per T3TIE			AMTFS	VE1BE		7.88		9.66							
	Virtual Collocation Cable Records - Fiber Cable, per 99 fiber records			AMTFS	VE1BF		84.49		77.13							
	Virtual Collocation Cable Records - CAT 5/RJ45			AMTFS	VE1B5		2.25		2.76							
Security																
	Virtual collocation - Security escort, basic time, normally scheduled work hours			AMTFS	SPTBX		16.93	10.73								
	Virtual collocation - Security escort, overtime, outside of normally scheduled work hours on a normal working day			AMTFS	SPTOX		22.05	13.86								
	Virtual collocation - Security escort, premium time, outside of a scheduled work day			AMTFS	SPTPX		27.17	16.98								
Maintenance																
	Virtual collocation - Maintenance in CO - Basic, per half hour			AMTFS	CTRLX		27.93	10.73								
	Virtual collocation - Maintenance in CO - Overtime, per half hour			AMTFS	SPTOM		36.47	13.86								
	Virtual collocation - Maintenance in CO - Premium per half hour			AMTFS	SPTPM		45.02	16.98								
Entrance Cable																
	Virtual Collocation - Cable Installation Charge, per cable			AMTFS	ESPCX		859.71		22.49							
	Virtual Collocation - Cable Support Structure, per cable			AMTFS	ESPSX	14.97										
COLLOCATION IN THE REMOTE SITE																
Physical Remote Site Collocation																
	Physical Collocation in the Remote Site - Application Fee			CLORS	PE1RA		307.70		168.22							
	Cabinet Space in the Remote Site per Bay/ Rack			CLORS	PE1RB	201.42										
	Physical Collocation in the Remote Site - Security Access - Key			CLORS	PE1RD		13.10									
	Physical Collocation in the Remote Site - Space Availability Report per Premises Requested			CLORS	PE1SR		115.87									

COLLOCATION - Alabama														Attachment 4 Exh: B			
CATEGORY	RATE ELEMENTS	Interim	Zone	BCS	USOC	RATES($)					Svc Order Submitted Elec per LSR	Svc Order Submitted Manually per LSR	Incremental Charge - Manual Svc Order vs. Electronic-1st	Incremental Charge - Manual Svc Order vs. Electronic-Add'l	Incremental Charge - Manual Svc Order vs. Electronic-Disc 1st	Incremental Charge - Manual Svc Order vs. Electronic-Disc Add'l
						Rec	Nonrecurring		Nonrecurring Disconnect		OSS Rates($)					
							First	Add'l	First	Add'l	SOMEC	SOMAN	SOMAN	SOMAN	SOMAN	SOMAN
	Physical Collocation in the Remote Site - Remote Site CLLI Code Request, per CLLI Code Requested			CLORS	PE1RE		37.56									
	Remote Site DLEC Data (BRSDD), per Compact Disk, per CO			CLORS	PE1RR		233.38									
	Power, DC Power Provisioning (Alabama Only ICB Rate)															
	Physical Collocation - Security Escort for Basic Time - normally scheduled work, per half hour			CLORS	PE1BT		16.93	10.73								
	Physical Collocation - Security Escort for Overtime - outside of normally scheduled working hours on a scheduled work day, per half hour			CLORS	PE1OT		22.05	13.86								
	Physical Collocation - Security Escort for Premium Time - outside of scheduled work day, per half hour			CLORS	PE1PT		27.17	16.98								
Adjacent Remote Site Collocation																
	Remote Site-Adjacent Collocation-Application Fee			CLORS	PE1RU		755.62	755.62								
	Remote Site-Adjacent Collocation - Real Estate, per square foot			CLORS	PE1RT	0.134										
	Remote Site-Adjacent Collocation - AC Power, per breaker amp			CLORS	PE1RS	6.27										
NOTE: If Security Escort and/or Add'l Engineering Fees become necessary for adjacent remote site collocation, the Parties will negotiate appropriate rates.																
Virtual Remote Site Collocation																
	Virtual Collocation in the Remote Site - Application Fee			VE1RS	VE1RB		307.70	307.70	168.22	168.22						
	Virtual Collocation in the Remote Site - Per Bay/Rack of Space			VE1RS	VE1RC	201.42										
	Virtual Collocation in the Remote Site - Space Availability Report per Premises requested			VE1RS	VE1RR		115.87	115.87								
	Virtual Collocation in the Remote Site - Remote Site CLLI Code Request, per CLLI Code Requested			VE1RS	VE1RL		37.56	37.56								
ADJACENT COLLOCATION																
	Adjacent Collocation - Space Charge per Sq. Ft.			CLOAC	PE1JA	0.14										
	Adjacent Collocation - Electrical Facility Charge per Linear Ft.			CLOAC	PE1JC	5.41										
	Adjacent Collocation - 2-Wire Cross-Connects			UEANL,UEQ,UEA,UCL, UAL, UHL, UDN	PE1JE	0.02	12.30	11.80	6.03	5.44						
	Adjacent Collocation - 4-Wire Cross-Connects			UEA,UHL,UDL,UCL	PE1JF	0.04	12.39	11.87	6.39	5.73						
	Adjacent Collocation - DS1 Cross-Connects			USL	PE1JG	1.03	22.03	15.93	6.40	5.79						
	Adjacent Collocation - DS3 Cross-Connects			UE3	PE1JH	13.95	20.89	15.20	7.38	5.92						
	Adjacent Collocation - 2-Fiber Cross-Connect			CLOAC	PE1JJ	2.36	20.89	15.20	7.38	5.92						
	Adjacent Collocation - 4-Fiber Cross-Connect			CLOAC	PE1JK	4.52	25.55	19.86	9.71	8.25						
	Adjacent Collocation - Application Fee			CLOAC	PE1JB		1,576.69		0.51							
	Adjacent Collocation - 120V, Single Phase Standby Power Rate per AC Breaker Amp			CLOAC	PE1JL	4.91										
	Adjacent Collocation - 240V, Single Phase Standby Power Rate per AC Breaker Amp			CLOAC	PE1JM	9.84										
	Adjacent Collocation - 120V, Three Phase Standby Power Rate per AC Breaker Amp			CLOAC	PE1JN	14.74										
	Adjacent Collocation - 277V, Three Phase Standby Power Rate per AC Breaker Amp			CLOAC	PE1JO	34.06										
	Adjacent Collocation - DC power provisioning (Alabama Only Mandate ICB)															
Note: ICB means Individual Case Basis																
Note: Rates displaying an "I" in Interim column are interim as a result of a Commission order.																

COLLOCATION - Florida														Attachment 4 Exh: B			
CATEGORY		RATE ELEMENTS	Interim	Zone	BCS	USOC	RATES($)					Svc Order Submitted Elec per LSR	Svc Order Submitted Manually per LSR	Incremental Charge - Manual Svc Order vs. Electronic-1st	Incremental Charge - Manual Svc Order vs. Electronic-Add'l	Incremental Charge - Manual Svc Order vs. Electronic-Disc 1st	Incremental Charge - Manual Svc Order vs. Electronic-Disc Add'l
							Rec	Nonrecurring		Nonrecurring Disconnect		OSS Rates($)					
								First	Add'l	First	Add'l	SOMEC	SOMAN	SOMAN	SOMAN	SOMAN	SOMAN
PHYSICAL COLLOCATION																	
	Application																
		Physical Collocation - Initial Application Fee			CLO	PE1BA		2,785.00		1.20							
		Physical Collocation - Subsequent Application Fee			CLO	PE1CA		2,236.00		1.20							
		Physical Collocation - Co-Carrier Cross Connects/Direct Connect, Application Fee, per application			CLO	PE1DT		564.81									
		Physical Collocation - Power Reconfiguration Only, Application Fee			CLO	PE1PR		409.50									
		Physical Collocation Administrative Only - Application Fee			CLO	PE1BL		760.91		1.20							
	Space Preparation																
		Physical Collocation - Floor Space, per sq feet			CLO	PE1PJ	5.28										
		Physical Collocation - Space Enclosure, welded wire, first 50 square feet			CLO	PE1BX	171.12										
		Physical Collocation - Space enclosure, welded wire, first 100 square feet			CLO	PE1BW	189.73										
		Physical Collocation - Space enclosure, welded wire, each additional 50 square feet			CLO	PE1CW	18.61										
		Physical Collocation - Space Preparation - C.O. Modification per square ft.			CLO	PE1SK	2.38										
		Physical Collocation - Space Preparation, Common Systems Modifications-Cageless, per square foot			CLO	PE1SL	2.50										
		Physical Collocation - Space Preparation - Common Systems Modifications-Caged, per cage			CLO	PE1SM	84.93										
		Physical Collocation - Space Preparation - Firm Order Processing			CLO	PE1SJ		287.36									
		Physical Collocation - Space Availability Report, per Central Office Requested			CLO	PE1SR		572.66									
	Power																
		Physical Collocation - Power, -48V DC Power - per Fused Amp Requested			CLO	PE1PL	7.80										
		Physical Collocation - Power, 120V AC Power, Single Phase, per Breaker Amp			CLO	PE1FB	5.26										
		Physical Collocation - Power, 240V AC Power, Single Phase, per Breaker Amp			CLO	PE1FD	10.53										
		Physical Collocation - Power, 120V AC Power, Three Phase, per Breaker Amp			CLO	PE1FE	15.80										
		Physical Collocation - Power, 277V AC Power, Three Phase, per Breaker Amp			CLO	PE1FG	36.47										
		Physical Collocation - Power - DC power, per Used Amp			CLO	PE1FN	10.69										
	Cross Connects (Cross Connects, Co-Carrier Cross Connects, and Ports)																
		Physical Collocation - 2-wire cross-connect, loop, provisioning			UEANL,UEQ,UNCNX, UEA, UCL, UAL, UHL, UDN, UNCVX	PE1P2	0.0208	7.32	5.37	4.58	2.71						
		Physical Collocation - 4-wire cross-connect, loop, provisioning			UEA, UHL, UNCVX, UNCDX, UCL, UDL	PE1P4	0.0416	8.00	5.75	5.00	2.69						
		Physical Collocation -DS1 Cross-Connect for Physical Collocation, provisioning			WDS1L, WDS1S, UXTD1, ULDD1, USLEL, UNLD1, U1TD1, UNC1X, UEPSR, UEPSB, UEPSE, UEPSP, USL, UEPEX, UEPDX	PE1P1	0.3786	7.88	6.25	1.35	0.9899						

COLLOCATION - Florida														Attachment 4 Exh: B			
CATEGORY		RATE ELEMENTS	Interim	Zone	BCS	USOC	RATES($)					Svc Order Submitted Elec per LSR	Svc Order Submitted Manually per LSR	Incremental Charge - Manual Svc Order vs. Electronic-1st	Incremental Charge - Manual Svc Order vs. Electronic-Add'l	Incremental Charge - Manual Svc Order vs. Electronic-Disc 1st	Incremental Charge - Manual Svc Order vs. Electronic-Disc Add'l
							Rec	Nonrecurring		Nonrecurring Disconnect		OSS Rates($)					
								First	Add'l	First	Add'l	SOMEC	SOMAN	SOMAN	SOMAN	SOMAN	SOMAN
		Physical Collocation - DS3 Cross-Connect, provisioning			UE3, U1TD3, UXTD3, UXTS1, UNC3X, UNCSX, ULDD3, U1TS1, ULDS1, UNLD3, UEPEX, UEPDX, UEPSR, UEPSB, UEPSE, UEPSP	PE1P3	4.16	32.40	31.03	11.15	10.98						
		Physical Collocation - 2-Fiber Cross-Connect			CLO, ULDO3, ULD12, ULD48, U1TO3, U1T12, U1T48, UDLO3, UDL12, UDF	PE1F2	1.71	28.26	25.85	13.78	11.01						
		Physical Collocation - 4-Fiber Cross-Connect			ULDO3, ULD12, ULD48, U1TO3, U1T12, U1T48, UDLO3, UDL12, UDF, UDFCX	PE1F4	3.34	37.92	35.51	18.20	15.44						
		Physical Collocation - Co-Carrier Cross Connects/Direct Connect - Fiber Cable Support Structure, per linear foot, per cable.			CLO	PE1ES	0.0008										
		Physical Collocation - Co-Carrier Cross Connect/Direct Connect - Copper/Coax Cable Support Structure, per linear foot, per cable.			CLO	PE1DS	0.0012										
		Physical Collocation 2-Wire Cross Connect, Port			UEPSR, UEPSP, UEPSE, UEPSB, UEPSX, UEP2C	PE1R2	0.0208	7.32	5.37	4.58	2.71						
		Physical Collocation 4-Wire Cross Connect, Port			UEPEX, UEPDD	PE1R4	0.0416	8.00	5.75	5.00	2.69						
	Security																
		Physical Collocation - Security Escort for Basic Time - normally scheduled work, per half hour			CLO	PE1BT		33.65	22.05								
		Physical Collocation - Security Escort for Overtime - outside of normally scheduled working hours on a scheduled work day, per half hour			CLO	PE1OT		44.63	28.89								
		Physical Collocation - Security Escort for Premium Time - outside of scheduled work day, per half hour			CLO	PE1PT		55.62	35.73								
		Physical Collocation - Security Access System - Security System per Central Office, per Sq. Ft.			CLO	PE1AY	0.0101										
		Physical Collocation -Security Access System - New Card Activation, per Card Activation (First), per State			CLO	PE1A1		38.95									
		Physical Collocation-Security Access System-Administrative Change, existing Access Card, per Request, per State, per Card			CLO	PE1AA		8.84									
		Physical Collocation - Security Access System - Replace Lost or Stolen Card, per Card			CLO	PE1AR		28.78									
		Physical Collocation - Security Access - Initial Key, per Key			CLO	PE1AK		23.28									
		Physical Collocation - Security Access - Key, Replace Lost or Stolen Key, per Key			CLO	PE1AL		23.28									
	CFA																
		Physical Collocation - CFA Information Resend Request, per premises, per arrangement, per request			CLO	PE1C9		79.52									
	Cable Records - Note: The rates in the First & Additional columns will actually be billed as "Initial I" and "Subsequent S" respectively																
		Physical Collocation - Cable Records, per request			CLO	PE1CR		I 1515.00	S 973.64	256.35							
		Physical Collocation, Cable Records, VG/DS0 Cable, per cable record (maximum 3600 records)			CLO	PE1CD		646.84		362.41							
		Physical Collocation, Cable Records, VG/DS0 Cable, per each 100 pair			CLO	PE1CO		9.11		10.80							
		Physical Collocation, Cable Records, DS1, per T1 TIE			CLO	PE1C1		4.52		5.35							
		Physical Collocation, Cable Records, DS3, per T3 TIE			CLO	PE1C3		15.81		18.73							

COLLOCATION - Florida														Attachment 4 Exh: B			
CATEGORY		RATE ELEMENTS	Interim	Zone	BCS	USOC	RATES($)					Svc Order Submitted Elec per LSR	Svc Order Submitted Manually per LSR	Incremental Charge - Manual Svc Order vs. Electronic-1st	Incremental Charge - Manual Svc Order vs. Electronic-Add'l	Incremental Charge - Manual Svc Order vs. Electronic-Disc 1st	Incremental Charge - Manual Svc Order vs. Electronic-Disc Add'l
							Rec	Nonrecurring		Nonrecurring Disconnect		OSS Rates($)					
								First	Add'l	First	Add'l	SOMEC	SOMAN	SOMAN	SOMAN	SOMAN	SOMAN
		Physical Collocation - Cable Records, Fiber Cable, per cable record (maximum 99 records)			CLO	PE1CB		169.96		149.97							
		Physical Collocation, Cable Records,CAT5/RJ45			CLO	PE1C5		4.52		5.35							
	Virtual to Physical																
		Physical Collocation - Virtual to Physical Collocation Relocation, per Voice Grade Circuit			CLO	PE1BV		33.00									
		Physical Collocation - Virtual to Physical Collocation Relocation, per DSO Circuit			CLO	PE1BO		33.00									
		Physical Collocation - Virtual to Physical Collocation Relocation, per DS1 Circuit			CLO	PE1B1		52.00									
		Physical Collocation - Virtual to Physical Collocation Relocation, per DS3 Circuit			CLO	PE1B3		52.00									
		Physical Collocation - Virtual to Physical Collocation In-Place, Per Voice Grade Circuit			CLO	PE1BR		22.51									
		Physical Collocation Virtual to Physical Collocation In-Place, Per DSO Circuit			CLO	PE1BP		22.51									
		Physical Collocation - Virtual to Physical Collocation In-Place, Per DS1 Circuit			CLO	PE1BS		32.73									
		Physical Collocation - Virtual to Physical Collocation In-Place, per DS3 Circuit			CLO	PE1BE		32.73									
	Entrance Cable																
		Physical Collocation - Fiber Cable Support Structure, per Entrance Cable			CLO	PE1PM	5.19										
		Physical Collocation - Fiber Entrance Cable per Cable (CO manhole to vault splice)			CLO	PE1EC		994.12		43.84							
		Physical Collocation - Fiber Entrance Cable Installation, per Fiber			CLO	PE1ED		7.43									
VIRTUAL COLLOCATION																	
	Application																
		Virtual Collocation - Application Fee			AMTFS	EAF		1,241.00		1.20							
		Virtual Collocation - Co-Carrier Cross Connects/Direct Connect, Application Fee, per application			AMTFS	VE1CA		564.81									
		Virtual Collocation Administrative Only - Application Fee			AMTFS	VE1AF		760.91		1.20							
	Space Preparation																
		Virtual Collocation - Floor Space, per sq. ft.			AMTFS	ESPVX	5.28										
	Power																
		Virtual Collocation - Power, per fused amp			AMTFS	ESPAX	6.95										
		Virtual Collocation - Power, DC power, per Used Amp			AMTFS	VE1PF	10.69										
	Cross Connects (Cross Connects, Co-Carrier Cross Connects, and Ports)																
		Virtual Collocation - 2-wire cross-connect, loop, provisioning			UEANL, UEA, UDN, UAL, UHL, UCL, UEQ, UNCVX, UNCDX, UNCNX	UEAC2	0.0201	7.32	5.37	4.58	2.71						
		Virtual Collocation - 4-wire cross-connect, loop, provisioning			UEA, UHL, UCL, UDL, UNCVX, UNCDX	UEAC4	0.0403	8.00	5.75	5.00	2.69						
		Virtual collocation - Special Access & UNE, cross-connect per DS1			ULR, UXTD1, UNC1X, ULDD1, U1TD1, USLEL, UNLD1, USL, UEPEX, UEPDX	CNC1X	0.3786	7.88	6.26	1.35	0.9915						
		Virtual collocation - Special Access & UNE, cross-connect per DS3			USL, UE3, U1TD3, UXTS1, UXTD3, UNC3X, UNCSX, ULDD3, U1TS1, ULDS1, UDLSX, UNLD3	CND3X	4.16	32.40	31.03	11.15	10.98						

COLLOCATION - Florida														Attachment 4 Exh: B			
CATEGORY		RATE ELEMENTS	Interim	Zone	BCS	USOC	RATES($)					Svc Order Submitted Elec per LSR	Svc Order Submitted Manually per LSR	Incremental Charge - Manual Svc Order vs. Electronic-1st	Incremental Charge - Manual Svc Order vs. Electronic-Add'l	Incremental Charge - Manual Svc Order vs. Electronic-Disc 1st	Incremental Charge - Manual Svc Order vs. Electronic-Disc Add'l
							Rec	Nonrecurring		Nonrecurring Disconnect		OSS Rates($)					
								First	Add'l	First	Add'l	SOMEC	SOMAN	SOMAN	SOMAN	SOMAN	SOMAN
		Virtual Collocation - 2-Fiber Cross Connects			UDL12, UDLO3, U1T48, U1T12, U1TO3, ULDO3, ULD12, ULD48, UDF	CNC2F	1.75	28.26	25.85	13.78	11.01						
		Virtual Collocation - 4-Fiber Cross Connects			UDL12, UDLO3, U1T48, U1T12, U1TO3, ULDO3, ULD12, ULD48, UDF	CNC4F	3.50	37.92	35.51	18.20	15.44						
		Virtual Collocation - Co-Carrier Cross Connects/Direct Connect - Fiber Cable Support Structure, per linear foot, per cable			AMTFS	VE1CB	0.0008										
		Virtual Collocation - Co-Carrier Cross Connects/Direct Connect - Copper/Coax Cable Support Structure, per linear foot, per cable			AMTFS	VE1CD	0.0012										
		Virtual Collocation 2-Wire Cross Connect, Port			UEPSX, UEPSB, UEPSE, UEPSP, UEPSR, UEP2C	VE1R2	0.0201	7.32	5.37	4.58	2.71						
		Virtual Collocation 4-Wire Cross Connect, Port			UEPDD, UEPEX	VE1R4	0.0403	8.00	5.75	5.00	2.69						
	CFA																
		Virtual Collocation - CFA Information Resend Request, per Premises, per Arrangement, per request			AMTFS	VE1QR		79.52									
	Cable Records - Note: The rates in the First & Additional columns will actually be billed as "Initial I" & "Subsequent S" respectively																
		Virtual Collocation Cable Records - per request			AMTFS	VE1BA		I 1515.00	S 973.64	256.35							
		Virtual Collocation Cable Records - VG/DS0 Cable, per cable record			AMTFS	VE1BB		646.84		362.41							
		Virtual Collocation Cable Records - VG/DS0 Cable, per each 100 pair			AMTFS	VE1BC		9.11		10.80							
		Virtual Collocation Cable Records - DS1, per T1TIE			AMTFS	VE1BD		4.52		5.35							
		Virtual Collocation Cable Records - DS3, per T3TIE			AMTFS	VE1BE		15.81		18.73							
		Virtual Collocation Cable Records - Fiber Cable, per 99 fiber records			AMTFS	VE1BF		169.96		149.97							
		Virtual Collocation Cable Records - CAT 5/RJ45			AMTFS	VE1B5		4.52		5.35							
	Security																
		Virtual collocation - Security escort, basic time, normally scheduled work hours			AMTFS	SPTBX		33.65	22.05								
		Virtual collocation - Security escort, overtime, outside of normally scheduled work hours on a normal working day			AMTFS	SPTOX		44.63	28.89								
		Virtual collocation - Security escort, premium time, outside of a scheduled work day			AMTFS	SPTPX		55.62	35.73								
	Maintenance																
		Virtual collocation - Maintenance in CO - Basic, per half hour			AMTFS	CTRLX		54.05	22.05								
		Virtual collocation - Maintenance in CO - Overtime, per half hour			AMTFS	SPTOM		72.18	28.89								
		Virtual collocation - Maintenance in CO - Premium per half hour			AMTFS	SPTPM		90.31	35.73								
	Entrance Cable																
		Virtual Collocation - Cable Installation Charge, per cable			AMTFS	ESPCX		1,473.00		43.84							
		Virtual Collocation - Cable Support Structure, per cable			AMTFS	ESPSX	4.54										
COLLOCATION IN THE REMOTE SITE																	
	Physical Remote Site Collocation																
		Physical Collocation in the Remote Site - Application Fee			CLORS	PE1RA		612.23		270.35							
		Cabinet Space in the Remote Site per Bay/ Rack			CLORS	PE1RB	154.59										
		Physical Collocation in the Remote Site - Security Access - Key			CLORS	PE1RD		23.28									
		Physical Collocation in the Remote Site - Space Availability Report per Premises Requested			CLORS	PE1SR		223.91									

COLLOCATION - Florida														Attachment 4 Exh: B			
CATEGORY	RATE ELEMENTS	Interim	Zone	BCS	USOC	RATES($)					Svc Order Submitted Elec per LSR	Svc Order Submitted Manually per LSR	Incremental Charge - Manual Svc Order vs. Electronic-1st	Incremental Charge - Manual Svc Order vs. Electronic-Add'l	Incremental Charge - Manual Svc Order vs. Electronic-Disc 1st	Incremental Charge - Manual Svc Order vs. Electronic-Disc Add'l
						Rec	Nonrecurring		Nonrecurring Disconnect		OSS Rates($)					
							First	Add'l	First	Add'l	SOMEC	SOMAN	SOMAN	SOMAN	SOMAN	SOMAN
	Physical Collocation in the Remote Site - Remote Site CLLI Code Request, per CLLI Code Requested			CLORS	PE1RE		73.39									
	Remote Site DLEC Data (BRSDD), per Compact Disk, per CO			CLORS	PE1RR		208.02									
	Physical Collocation - Security Escort for Basic Time - normally scheduled work, per half hour			CLORS	PE1BT		33.65	22.05								
	Physical Collocation - Security Escort for Overtime - outside of normally scheduled working hours on a scheduled work day, per half hour			CLORS	PE1OT		44.63	28.89								
	Physical Collocation - Security Escort for Premium Time - outside of scheduled work day, per half hour			CLORS	PE1PT		55.62	35.73								
	Adjacent Remote Site Collocation															
	Remote Site-Adjacent Collocation-Application Fee			CLORS	PE1RU		755.62	755.62								
	Remote Site-Adjacent Collocation - Real Estate, per square foot			CLORS	PE1RT	0.134										
	Remote Site-Adjacent Collocation - AC Power, per breaker amp			CLORS	PE1RS	6.27										
	NOTE: If Security Escort and/or Add'l Engineering Fees become necessary for adjacent remote site collocation, the Parties will negotiate appropriate rates.															
	Virtual Remote Site Collocation															
	Virtual Collocation in the Remote Site - Application Fee			VE1RS	VE1RB		612.23		270.35							
	Virtual Collocation in the Remote Site - Per Bay/Rack of Space			VE1RS	VE1RC	154.59										
	Virtual Collocation in the Remote Site - Space Availability Report per Premises requested			VE1RS	VE1RR		223.91									
	Virtual Collocation in the Remote Site - Remote Site CLLI Code Request, per CLLI Code Requested			VE1RS	VE1RL		73.39									
ADJACENT COLLOCATION																
	Adjacent Collocation - Space Charge per Sq. Ft.			CLOAC	PE1JA	0.1666										
	Adjacent Collocation - Electrical Facility Charge per Linear Ft.			CLOAC	PE1JC	4.62										
	Adjacent Collocation - 2-Wire Cross-Connects			UEANL,UEQ,UEA,UCL, UAL, UHL, UDN	PE1JE	0.0194	7.32	5.37	4.58	2.71						
	Adjacent Collocation - 4-Wire Cross-Connects			UEA,UHL,UDL,UCL	PE1JF	0.0388	8.00	5.75	5.00	2.69						
	Adjacent Collocation - DS1 Cross-Connects			USL	PE1JG	0.3708	7.88	6.26	1.35	0.9915						
	Adjacent Collocation - DS3 Cross-Connects			UE3	PE1JH	4.14	32.40	31.03	11.15	10.98						
	Adjacent Collocation - 2-Fiber Cross-Connect			CLOAC	PE1JJ	1.70	28.26	25.85	13.78	11.01						
	Adjacent Collocation - 4-Fiber Cross-Connect			CLOAC	PE1JK	3.33	37.92	35.51	18.20	15.44						
	Adjacent Collocation - Application Fee			CLOAC	PE1JB		2,763.00		1.02							
	Adjacent Collocation - 120V, Single Phase Standby Power Rate per AC Breaker Amp			CLOAC	PE1JL	5.26										
	Adjacent Collocation - 240V, Single Phase Standby Power Rate per AC Breaker Amp			CLOAC	PE1JM	10.53										
	Adjacent Collocation - 120V, Three Phase Standby Power Rate per AC Breaker Amp			CLOAC	PE1JN	15.80										
	Adjacent Collocation - 277V, Three Phase Standby Power Rate per AC Breaker Amp			CLOAC	PE1JO	36.47										
	Adjacent Collocation - Cable Support Structure per Entrance Cable			CLOAC	PE1JP	5.19										
	Notes: Rates displaying an "I" in Interim column are interim as a result of a Commission Order.															

COLLOCATION - Georgia														Attachment 4 Exh: B			
CATEGORY		RATE ELEMENTS	Interim	Zone	BCS	USOC	RATES($)					Svc Order Submitted Elec per LSR	Svc Order Submitted Manually per LSR	Incremental Charge - Manual Svc Order vs. Electronic-1st	Incremental Charge - Manual Svc Order vs. Electronic-Add'l	Incremental Charge - Manual Svc Order vs. Electronic-Disc 1st	Incremental Charge - Manual Svc Order vs. Electronic-Disc Add'l
							Rec	Nonrecurring		Nonrecurring Disconnect		OSS Rates($)					
								First	Add'l	First	Add'l	SOMEC	SOMAN	SOMAN	SOMAN	SOMAN	SOMAN
PHYSICAL COLLOCATION																	
	Application																
		Physical Collocation - Initial Application Fee			CLO	PE1BA		1,284.72		0.59							
		Physical Collocation - Subsequent Application Fee			CLO	PE1CA		1,084.41		0.59							
		Physical Collocation - Co-Carrier Cross Connects/Direct Connect, Application Fee, per application			CLO	PE1DT		583.18									
		Physical Collocation Administrative Only - Application Fee			CLO	PE1BL		740.83									
		Physical Collocation - Application Cost, Simple Augment			CLO	PE1KS		594.05		1.21							
		Physical Collocation - Application Cost, Minor Augment			CLO	PE1KM		832.95		1.21							
		Physical Collocation - Application Cost, Intermediate Augment			CLO	PE1K1		1,057.00		1.21							
		Physical Collocation - Application Cost - Major Augment			CLO	PE1KJ		2,408.00		1.21							
	Space Preparation																
		Physical Collocation - Floor Space, per sq feet			CLO	PE1PJ	4.71										
		Physical Collocation - Space Enclosure, welded wire, first 50 square feet			CLO	PE1BX	144.71										
		Physical Collocation - Space enclosure, welded wire, first 100 square feet			CLO	PE1BW	167.00										
		Physical Collocation - Space enclosure, welded wire, each additional 50 square feet			CLO	PE1CW	16.38										
		Physical Collocation - Space Preparation - C.O. Modification per square ft.			CLO	PE1SK	2.10										
		Physical Collocation - Space Preparation, Common Systems Modifications-Cageless, per square foot			CLO	PE1SL	2.27										
		Physical Collocation - Space Preparation - Common Systems Modifications-Caged, per cage			CLO	PE1SM	77.24										
		Physical Collocation - Space Preparation - Firm Order Processing			CLO	PE1SJ		140.96									
		Physical Collocation - Space Availability Report, per Central Office Requested			CLO	PE1SR		248.50									
	Power																
		Physical Collocation - Power, -48V DC Power - per Fused Amp Requested			CLO	PE1PL	4.84										
		Physical Collocation - Power, 120V AC Power, Single Phase, per Breaker Amp			CLO	PE1FB	5.16										
		Physical Collocation - Power, 240V AC Power, Single Phase, per Breaker Amp			CLO	PE1FD	10.34										
		Physical Collocation - Power, 120V AC Power, Three Phase, per Breaker Amp			CLO	PE1FE	15.50										
		Physical Collocation - Power, 277V AC Power, Three Phase, per Breaker Amp			CLO	PE1FG	35.79										
	Cross Connects (Cross Connects, Co-Carrier Cross Connects, and Ports)																
		Physical Collocation - 2-wire cross-connect, loop, provisioning			UEANL,UEQ, UNCNX, UEA, UCL, UAL, UHL, UDN, UNCVX	PE1P2	0.0202										
		Physical Collocation - 4-wire cross-connect, loop, provisioning			UEA, UHL, UNCVX, UNCDX, UCL, UDL	PE1P4	0.0403										
		Physical Collocation -DS1 Cross-Connect for Physical Collocation, provisioning			WDS1L, WDS1S, UXTD1, ULDD1, USLEL, UNLD1, U1TD1, UNC1X, UEPSR, UEPSB, UEPSE, UEPSP, USL, UEPEX, UEPDX	PE1P1	0.3807										

COLLOCATION - Georgia														Attachment 4 Exh: B			
CATEGORY		RATE ELEMENTS	Interim	Zone	BCS	USOC	RATES($)					Svc Order Submitted Elec per LSR	Svc Order Submitted Manually per LSR	Incremental Charge - Manual Svc Order vs. Electronic-1st	Incremental Charge - Manual Svc Order vs. Electronic-Add'l	Incremental Charge - Manual Svc Order vs. Electronic-Disc 1st	Incremental Charge - Manual Svc Order vs. Electronic-Disc Add'l
							Rec	Nonrecurring		Nonrecurring Disconnect		OSS Rates($)					
								First	Add'l	First	Add'l	SOMEC	SOMAN	SOMAN	SOMAN	SOMAN	SOMAN
		Physical Collocation - DS3 Cross-Connect, provisioning			UE3, U1TD3, UXTD3, UXTS1, UNC3X, UNCSX, ULDD3, U1TS1, ULDS1, UNLD3, UEPEX, UEPDX, UEPSR, UEPSB, UEPSE, UEPSP	PE1P3	4.15										
		Physical Collocation - 2-Fiber Cross-Connect			CLO, ULDO3, ULD12, ULD48, U1TO3, U1T12, U1T48, UDLO3, UDL12, UDF	PE1F2	1.76										
		Physical Collocation - 4-Fiber Cross-Connect			ULDO3, ULD12, ULD48, U1TO3, U1T12, U1T48, UDLO3, UDL12, UDF, UDFCX	PE1F4	3.38										
		Physical Collocation - Co-Carrier Cross Connects/Direct Connect - Fiber Cable Support Structure, per linear foot, per cable.			CLO	PE1ES	0.001										
		Physical Collocation - Co-Carrier Cross Connect/Direct Connect - Copper/Coax Cable Support Structure, per linear foot, per cable.			CLO	PE1DS	0.0015										
		Physical Collocation 2-Wire Cross Connect, Port			UEPSR, UEPSP, UEPSE, UEPSB, UEPSX, UEP2C	PE1R2	0.0202										
		Physical Collocation 4-Wire Cross Connect, Port			UEPEX, UEPDD	PE1R4	0.0403										
	Security																
		Physical Collocation - Security Escort for Basic Time - normally scheduled work, per half hour			CLO	PE1BT		16.51	10.82								
		Physical Collocation - Security Escort for Overtime - outside of normally scheduled working hours on a scheduled work day, per half hour			CLO	PE1OT		21.90	14.17								
		Physical Collocation - Security Escort for Premium Time - outside of scheduled work day, per half hour			CLO	PE1PT		27.29	17.53								
		Physical Collocation - Security Access System - Security System per Central Office, per Sq. Ft.			CLO	PE1AY	0.011										
		Physical Collocation -Security Access System - New Card Activation, per Card Activation (First), per State			CLO	PE1A1		21.98									
		Physical Collocation - Security Access System - New Access Card Deactivation, per Card			CLO	PE1A4		8.72	8.72								
		Physical Collocation-Security Access System-Administrative Change, existing Access Card, per Request, per State, per Card			CLO	PE1AA		5.37									
		Physical Collocation - Security Access System - Replace Lost or Stolen Card, per Card			CLO	PE1AR		16.99									
		Physical Collocation - Security Access - Initial Key, per Key			CLO	PE1AK		13.19									
		Physical Collocation - Security Access - Key, Replace Lost or Stolen Key, per Key			CLO	PE1AL		13.19									
	CFA																
		Physical Collocation - CFA Information Resend Request, per premises, per arrangement, per request			CLO	PE1C9		77.42									
	Cable Records - Note: The rates in the First & Additional columns will actually be billed as "Initial I" and "Subsequent S" respectively																
		Physical Collocation - Cable Records, per request			CLO	PE1CR		I 742.92	S 477.59	125.63							
		Physical Collocation, Cable Records, VG/DS0 Cable, per cable record (maximum 3600 records)			CLO	PE1CD		317.29		177.60							
		Physical Collocation, Cable Records, VG/DS0 Cable, per each 100 pair			CLO	PE1CO		4.47		5.29							

COLLOCATION - Georgia														Attachment 4 Exh: B			
CATEGORY		RATE ELEMENTS	Interim	Zone	BCS	USOC	RATES($)					Svc Order Submitted Elec per LSR	Svc Order Submitted Manually per LSR	Incremental Charge - Manual Svc Order vs. Electronic-1st	Incremental Charge - Manual Svc Order vs. Electronic-Add'l	Incremental Charge - Manual Svc Order vs. Electronic-Disc 1st	Incremental Charge - Manual Svc Order vs. Electronic-Disc Add'l
							Rec	Nonrecurring		Nonrecurring Disconnect		OSS Rates($)					
								First	Add'l	First	Add'l	SOMEC	SOMAN	SOMAN	SOMAN	SOMAN	SOMAN
		Physical Collocation, Cable Records, DS1, per T1 TIE			CLO	PE1C1		2.22		2.62							
		Physical Collocation, Cable Records, DS3, per T3 TIE			CLO	PE1C3		7.76		9.18							
		Physical Collocation - Cable Records, Fiber Cable, per cable record (maximum 99 records)			CLO	PE1CB		83.37		73.49							
		Physical Collocation, Cable Records,CAT5/RJ45			CLO	PE1C5		2.22		2.62							
	Virtual to Physical																
		Physical Collocation - Virtual to Physical Collocation Relocation, per Voice Grade Circuit			CLO	PE1BV		33.00									
		Physical Collocation - Virtual to Physical Collocation Relocation, per DSO Circuit			CLO	PE1BO		33.00									
		Physical Collocation - Virtual to Physical Collocation Relocation, per DS1 Circuit			CLO	PE1B1		52.00									
		Physical Collocation - Virtual to Physical Collocation Relocation, per DS3 Circuit			CLO	PE1B3		52.00									
		Physical Collocation - Virtual to Physical Collocation In-Place, Per Voice Grade Circuit			CLO	PE1BR		22.59									
		Physical Collocation Virtual to Physical Collocation In-Place, Per DSO Circuit			CLO	PE1BP		22.59									
		Physical Collocation - Virtual to Physical Collocation In-Place, Per DS1 Circuit			CLO	PE1BS		32.85									
		Physical Collocation - Virtual to Physical Collocation In-Place, per DS3 Circuit			CLO	PE1BE		32.85									
	Entrance Cable																
		Physical Collocation - Fiber Cable Installation, Pricing, non-recurring charge, per Entrance Cable			CLO	PE1BD		736.20		21.49							
		Physical Collocation - Fiber Cable Support Structure, per Entrance Cable			CLO	PE1PM	7.37										
		Physical Collocation, Entrance Cable Support Structure, Copper, per each 100 pairs or fraction thereof (CO Manhole to Collocation Space)			CLO	PE1EE	0.2686										
		Physical Collocation, Entrance Cable Installation, Copper, per Cable (CO Manhole to Collocation Space)			CLO	PE1EF		754.41		21.49							
		Physical Collocation, Entrance Cable Installation, Copper, per each 100 pairs or fraction thereof (CO Manhole to Collocation Space)			CLO	PE1EG		9.11									
		Physical Collocation - Fiber Entrance Cable Installation, per Fiber			CLO	PE1ED		3.90									
VIRTUAL COLLOCATION																	
	Application																
		Virtual Collocation - Application Fee			AMTFS	EAF		608.92		0.59							
		Virtual Collocation - Co-Carrier Cross Connects/Direct Connect, Application Fee, per application			AMTFS	VE1CA		583.18									
		Virtual Collocation Administrative Only - Application Fee			AMTFS	VE1AF		609.52									
	Space Preparation																
		Virtual Collocation - Floor Space, per sq. ft.			AMTFS	ESPVX	4.71										
	Power																
		Virtual Collocation - Power, per fused amp			AMTFS	ESPAX	4.84										
	Cross Connects (Cross Connects, Co-Carrier Cross Connects, and Ports)																
		Virtual Collocation - 2-wire cross-connect, loop, provisioning			UEANL, UEA, UDN, UAL, UHL, UCL, UEQ, UNCVX, UNCDX, UNCNX	UEAC2	0.0192										
		Virtual Collocation - 4-wire cross-connect, loop, provisioning			UEA, UHL, UCL, UDL, UNCVX, UNCDX	UEAC4	0.0385										

COLLOCATION - Georgia														Attachment 4 Exh: B			
CATEGORY		RATE ELEMENTS	Interim	Zone	BCS	USOC	RATES($)					Svc Order Submitted Elec per LSR	Svc Order Submitted Manually per LSR	Incremental Charge - Manual Svc Order vs. Electronic-1st	Incremental Charge - Manual Svc Order vs. Electronic-Add'l	Incremental Charge - Manual Svc Order vs. Electronic-Disc 1st	Incremental Charge - Manual Svc Order vs. Electronic-Disc Add'l
							Rec	Nonrecurring		Nonrecurring Disconnect		OSS Rates($)					
								First	Add'l	First	Add'l	SOMEC	SOMAN	SOMAN	SOMAN	SOMAN	SOMAN
		Virtual collocation - Special Access & UNE, cross-connect per DS1			ULR, UXTD1, UNC1X, ULDD1, U1TD1, USLEL, UNLD1, USL, UEPEX, UEPDX	CNC1X	0.3807										
		Virtual collocation - Special Access & UNE, cross-connect per DS3			USL, UE3, U1TD3, UXTS1, UXTD3, UNC3X, UNCSX, ULDD3, U1TS1, ULDS1, UDLSX, UNLD3	CND3X	4.15										
		Virtual Collocation - 2-Fiber Cross Connects			UDL12, UDLO3, U1T48, U1T12, U1TO3, ULDO3, ULD12, ULD48, UDF	CNC2F	1.76										
		Virtual Collocation - 4-Fiber Cross Connects			UDL12, UDLO3, U1T48, U1T12, U1TO3, ULDO3, ULD12, ULD48, UDF	CNC4F	3.53										
		Virtual Collocation - Co-Carrier Cross Connects/Direct Connect - Fiber Cable Support Structure, per linear foot, per cable			AMTFS	VE1CB	0.001										
		Virtual Collocation - Co-Carrier Cross Connects/Direct Connect - Copper/Coax Cable Support Structure, per linear foot, per cable			AMTFS	VE1CD	0.0015										
		Virtual Collocation 2-Wire Cross Connect, Port			UEPSX, UEPSB, UEPSE, UEPSP, UEPSR, UEP2C	VE1R2	0.0192										
		Virtual Collocation 4-Wire Cross Connect, Port			UEPDD, UEPEX	VE1R4	0.0385										
	CFA																
		Virtual Collocation - CFA Information Resend Request, per Premises, per Arrangement, per request			AMTFS	VE1QR		77.42									
	Cable Records - Note: The rates in the First & Additional columns will actually be billed as "Initial I" & "Subsequent S" respectively																
		Virtual Collocation Cable Records - per request			AMTFS	VE1BA		I 742.92	S 477.59	125.63							
		Virtual Collocation Cable Records - VG/DS0 Cable, per cable record			AMTFS	VE1BB		317.29		177.60							
		Virtual Collocation Cable Records - VG/DS0 Cable, per each 100 pair			AMTFS	VE1BC		4.47		5.29							
		Virtual Collocation Cable Records - DS1, per T1TIE			AMTFS	VE1BD		2.22		2.62							
		Virtual Collocation Cable Records - DS3, per T3TIE			AMTFS	VE1BE		7.76		9.18							
		Virtual Collocation Cable Records - Fiber Cable, per 99 fiber records			AMTFS	VE1BF		83.37		73.49							
		Virtual Collocation Cable Records - CAT 5/RJ45			AMTFS	VE1B5		2.22		2.62							
	Security																
		Virtual collocation - Security escort, basic time, normally scheduled work hours			AMTFS	SPTBX		16.51	10.82								
		Virtual collocation - Security escort, overtime, outside of normally scheduled work hours on a normal working day			AMTFS	SPTOX		21.90	14.17								
		Virtual collocation - Security escort, premium time, outside of a scheduled work day			AMTFS	SPTPX		27.29	17.53								
	Maintenance																
		Virtual collocation - Maintenance in CO - Basic, per half hour			AMTFS	CTRLX		26.52	10.82								
		Virtual collocation - Maintenance in CO - Overtime, per half hour			AMTFS	SPTOM		35.41	14.17								
		Virtual collocation - Maintenance in CO - Premium per half hour			AMTFS	SPTPM		44.30	17.53								
	Entrance Cable																

COLLOCATION - Georgia														Attachment 4 Exh: B			
CATEGORY		RATE ELEMENTS	Interim	Zone	BCS	USOC	RATES($)					Svc Order Submitted Elec per LSR	Svc Order Submitted Manually per LSR	Incremental Charge - Manual Svc Order vs. Electronic-1st	Incremental Charge - Manual Svc Order vs. Electronic-Add'l	Incremental Charge - Manual Svc Order vs. Electronic-Disc 1st	Incremental Charge - Manual Svc Order vs. Electronic-Disc Add'l
							Rec	Nonrecurring		Nonrecurring Disconnect		OSS Rates($)					
								First	Add'l	First	Add'l	SOMEC	SOMAN	SOMAN	SOMAN	SOMAN	SOMAN
		Virtual Collocation - Cable Installation Charge, per cable			AMTFS	ESPCX		736.20		21.49							
		Virtual Collocation - Cable Support Structure, per cable			AMTFS	ESPSX	7.74										
		Virtual Collocation, Entrance Cable Support Structure, Copper, per each 100 pairs or fraction thereof (CO Manhole to Frame)			AMTFS	VE1EE	0.235										
		Virtual Collocation, Entrance Cable Installation, Copper, per Cable (CO Manhole to Frame)			AMTFS	VE1EF		754.41		21.49							
		Virtual Collocation, Entrance Cable Installation, Copper, per each 100 pairs or fraction thereof (CO Manhole to Frame)			AMTFS	VE1EG		9.11									
COLLOCATION IN THE REMOTE SITE																	
	Physical Remote Site Collocation																
		Physical Collocation in the Remote Site - Application Fee			CLORS	PE1RA		300.31		132.49							
		Cabinet Space in the Remote Site per Bay/ Rack			CLORS	PE1RB	148.11										
		Physical Collocation in the Remote Site - Security Access - Key			CLORS	PE1RD		13.19									
		Physical Collocation in the Remote Site - Space Availability Report per Premises Requested			CLORS	PE1SR		109.83									
		Physical Collocation in the Remote Site - Remote Site CLLI Code Request, per CLLI Code Requested			CLORS	PE1RE		36.00									
		Remote Site DLEC Data (BRSDD), per Compact Disk, per CO			CLORS	PE1RR		116.71									
		Physical Collocation - Security Escort for Basic Time - normally scheduled work, per half hour			CLORS	PE1BT		16.51	10.82								
		Physical Collocation - Security Escort for Overtime - outside of normally scheduled working hours on a scheduled work day, per half hour			CLORS	PE1OT		21.90	14.17								
		Physical Collocation - Security Escort for Premium Time - outside of scheduled work day, per half hour			CLORS	PE1PT		27.29	17.53								
	Adjacent Remote Site Collocation																
		Remote Site-Adjacent Collocation-Application Fee			CLORS	PE1RU		755.62	755.62								
		Remote Site-Adjacent Collocation - Real Estate, per square foot			CLORS	PE1RT	0.134										
		Remote Site-Adjacent Collocation - AC Power, per breaker amp			CLORS	PE1RS	6.27										
	NOTE: If Security Escort and/or Add'l Engineering Fees become necessary for adjacent remote site collocation, the Parties will negotiate appropriate rates.																
	Virtual Remote Site Collocation																
		Virtual Collocation in the Remote Site - Application Fee			VE1RS	VE1RB		300.31		132.49							
		Virtual Collocation in the Remote Site - Per Bay/Rack of Space			VE1RS	VE1RC	148.11										
		Virtual Collocation in the Remote Site - Space Availability Report per Premises requested			VE1RS	VE1RR		109.83									
		Virtual Collocation in the Remote Site - Remote Site CLLI Code Request, per CLLI Code Requested			VE1RS	VE1RL		36.00									
ADJACENT COLLOCATION																	
		Adjacent Collocation - Space Charge per Sq. Ft.			CLOAC	PE1JA	0.1725										
		Adjacent Collocation - Electrical Facility Charge per Linear Ft.			CLOAC	PE1JC	4.12										
		Adjacent Collocation - 2-Wire Cross-Connects			UEANL,UEQ,UEA,UCL, UAL, UHL, UDN	PE1JE	0.0176										
		Adjacent Collocation - 4-Wire Cross-Connects			UEA,UHL,UDL,UCL	PE1JF	0.0353										
		Adjacent Collocation - DS1 Cross-Connects			USL	PE1JG	0.3686										
		Adjacent Collocation - DS3 Cross-Connects			UE3	PE1JH	4.83										
		Adjacent Collocation - 2-Fiber Cross-Connect			CLOAC	PE1JJ	1.69										
		Adjacent Collocation - 4-Fiber Cross-Connect			CLOAC	PE1JK	3.31										
		Adjacent Collocation - Application Fee			CLOAC	PE1JB		1,380.83		0.50							
		Adjacent Collocation - 120V, Single Phase Standby Power Rate per AC Breaker Amp			CLOAC	PE1JL	5.16										
		Adjacent Collocation - 240V, Single Phase Standby Power Rate per AC Breaker Amp			CLOAC	PE1JM	10.34										

COLLOCATION - Georgia														Attachment 4 Exh: B			
CATEGORY		RATE ELEMENTS	Interim	Zone	BCS	USOC	RATES($)					Svc Order Submitted Elec per LSR	Svc Order Submitted Manually per LSR	Incremental Charge - Manual Svc Order vs. Electronic-1st	Incremental Charge - Manual Svc Order vs. Electronic-Add'l	Incremental Charge - Manual Svc Order vs. Electronic-Disc 1st	Incremental Charge - Manual Svc Order vs. Electronic-Disc Add'l
							Rec	Nonrecurring		Nonrecurring Disconnect		OSS Rates($)					
								First	Add'l	First	Add'l	SOMEC	SOMAN	SOMAN	SOMAN	SOMAN	SOMAN
		Adjacent Collocation - 120V, Three Phase Standby Power Rate per AC Breaker Amp			CLOAC	PE1JN	15.50										
		Adjacent Collocation - 277V, Three Phase Standby Power Rate per AC Breaker Amp			CLOAC	PE1JO	35.79										
		Adjacent Collocation - 240V, Three Phase Standby Power Rate per AC Breaker Amp			CLOAC	PE1JD	35.79										
	Note: Rates displaying an "I" in Interim column are interim as a result of a Commission order.																

COLLOCATION - Kentucky														Attachment: 4 Exh B			
CATEGORY		RATE ELEMENTS	Interim	Zone	BCS	USOC	RATES($)					Svc Order Submitted Elec per LSR	Svc Order Submitted Manually per LSR	Incremental Charge - Manual Svc Order vs. Electronic-1st	Incremental Charge - Manual Svc Order vs. Electronic-Add'l	Incremental Charge - Manual Svc Order vs. Electronic-Disc 1st	Incremental Charge - Manual Svc Order vs. Electronic-Disc Add'l
							Rec	Nonrecurring		Nonrecurring Disconnect		OSS Rates($)					
								First	Add'l	First	Add'l	SOMEC	SOMAN	SOMAN	SOMAN	SOMAN	SOMAN
PHYSICAL COLLOCATION																	
	Application																
		Physical Collocation - Initial Application Fee			CLO	PE1BA		3,773.54		1.01							
		Physical Collocation - Subsequent Application Fee			CLO	PE1CA		3,145.35		1.01							
		Physical Collocation - Co-Carrier Cross Connects/Direct Connect, Application Fee, per application			CLO	PE1DT		584.20									
		Physical Collocation Administrative Only - Application Fee			CLO	PE1BL		742.12									
		Physical Collocation - Application Cost, Simple Augment			CLO	PE1KS		594.98		1.21							
		Physical Collocation - Application Cost, Minor Augment			CLO	PE1KM		834.26		1.21							
		Physical Collocation - Application Cost, Intermediate Augment			CLO	PE1K1		1,059.00		1.21							
		Physical Collocation - Application Cost - Major Augment			CLO	PE1KJ		2,412.00		1.21							
	Space Preparation																
		Physical Collocation - Floor Space, per sq feet			CLO	PE1PJ	7.99										
		Physical Collocation - Space Enclosure, welded wire, first 50 square feet			CLO	PE1BX	166.83										
		Physical Collocation - Space enclosure, welded wire, first 100 square feet			CLO	PE1BW	184.97										
		Physical Collocation - Space enclosure, welded wire, each additional 50 square feet			CLO	PE1CW	18.14										
		Physical Collocation - Space Preparation - C.O. Modification per square ft.			CLO	PE1SK	2.32										
		Physical Collocation - Space Preparation, Common Systems Modifications-Cageless, per square foot			CLO	PE1SL	3.26										
		Physical Collocation - Space Preparation - Common Systems Modifications-Caged, per cage			CLO	PE1SM	110.57										
		Physical Collocation - Space Preparation - Firm Order Processing			CLO	PE1SJ		1,206.07									
		Physical Collocation - Space Availability Report, per Central Office Requested			CLO	PE1SR		2,158.67									
	Power																
		Physical Collocation - Power, -48V DC Power - per Fused Amp Requested			CLO	PE1PL	8.06										
		Physical Collocation - Power, 120V AC Power, Single Phase, per Breaker Amp			CLO	PE1FB	5.44										
		Physical Collocation - Power, 240V AC Power, Single Phase, per Breaker Amp			CLO	PE1FD	10.88										
		Physical Collocation - Power, 120V AC Power, Three Phase, per Breaker Amp			CLO	PE1FE	16.32										
		Physical Collocation - Power, 277V AC Power, Three Phase, per Breaker Amp			CLO	PE1FG	37.68										
	Cross Connects (Cross Connects, Co-Carrier Cross Connects, and Ports)																
		Physical Collocation - 2-wire cross-connect, loop, provisioning			UEANL,UEQ, UNCNX, UEA, UCL, UAL, UHL, UDN, UNCVX	PE1P2	0.0333	24.68	23.68	12.14	10.95						
		Physical Collocation - 4-wire cross-connect, loop, provisioning			UEA, UHL, UNCVX, UNCDX, UCL, UDL	PE1P4	0.0665	24.88	23.82	12.77	11.46						
		Physical Collocation -DS1 Cross-Connect for Physical Collocation, provisioning			WDS1L, WDS1S, UXTD1, ULDD1, USLEL, UNLD1, U1TD1, UNC1X, UEPSR, UEPSB, UEPSE, UEPSP, USL, UEPEX, UEPDX	PE1P1	1.48	44.23	31.98	12.81	11.57						

CATEGORY	RATE ELEMENTS	Interim	Zone	BCS	USOC	RATES($)					Svc Order Submitted Elec per LSR	Svc Order Submitted Manually per LSR	Incremental Charge - Manual Svc Order vs. Electronic-1st	Incremental Charge - Manual Svc Order vs. Electronic-Add'l	Incremental Charge - Manual Svc Order vs. Electronic-Disc 1st	Incremental Charge - Manual Svc Order vs. Electronic-Disc Add'l
						Rec	Nonrecurring		Nonrecurring Disconnect		OSS Rates($)					
							First	Add'l	First	Add'l	SOMEC	SOMAN	SOMAN	SOMAN	SOMAN	SOMAN
	Physical Collocation - DS3 Cross-Connect, provisioning			UE3, U1TD3, UXTD3, UXTS1, UNC3X, UNCSX, ULDD3, U1TS1, ULDS1, UNLD3, UEPEX, UEPDX, UEPSR, UEPSB, UEPSE, UEPSP	PE1P3	18.89	41.93	30.51	14.75	11.83						
	Physical Collocation - 2-Fiber Cross-Connect			CLO, ULDO3, ULD12, ULD48, U1TO3, U1T12, U1T48, UDLO3, UDL12, UDF	PE1F2	3.75	41.93	30.51	14.76	11.84						
	Physical Collocation - 4-Fiber Cross-Connect			ULDO3, ULD12, ULD48, U1TO3, U1T12, U1T48, UDLO3, UDL12, UDF, UDFCX	PE1F4	6.65	51.29	39.87	19.41	16.49						
	Physical Collocation - Co-Carrier Cross Connects/Direct Connect - Fiber Cable Support Structure, per linear foot, per cable.			CLO	PE1ES	0.0012										
	Physical Collocation - Co-Carrier Cross Connect/Direct Connect - Copper/Coax Cable Support Structure, per linear foot, per cable.			CLO	PE1DS	0.0018										
	Physical Collocation 2-Wire Cross Connect, Port			UEPSR, UEPSP, UEPSE, UEPSB, UEPSX, UEP2C	PE1R2	0.0333	24.68	23.68	12.14	10.95						
	Physical Collocation 4-Wire Cross Connect, Port			UEPEX, UEPDD	PE1R4	0.0665	24.88	23.82	12.77	11.46						
Security																
	Physical Collocation - Security Escort for Basic Time - normally scheduled work, per half hour			CLO	PE1BT		33.98	21.53								
	Physical Collocation - Security Escort for Overtime - outside of normally scheduled working hours on a scheduled work day, per half hour			CLO	PE1OT		44.26	27.81								
	Physical Collocation - Security Escort for Premium Time - outside of scheduled work day, per half hour			CLO	PE1PT		54.54	34.09								
	Physical Collocation - Security Access System, Security System, per Central Office			CLO	PE1AX	76.10										
	Physical Collocation -Security Access System - New Card Activation, per Card Activation (First), per State			CLO	PE1A1	0.058	55.79									
	Physical Collocation-Security Access System-Administrative Change, existing Access Card, per Request, per State, per Card			CLO	PE1AA		15.64									
	Physical Collocation - Security Access System - Replace Lost or Stolen Card, per Card			CLO	PE1AR		45.74									
	Physical Collocation - Security Access - Initial Key, per Key			CLO	PE1AK		26.29									
	Physical Collocation - Security Access - Key, Replace Lost or Stolen Key, per Key			CLO	PE1AL		26.29									
CFA																
	Physical Collocation - CFA Information Resend Request, per premises, per arrangement, per request			CLO	PE1C9		77.55									
Cable Records - Note: The rates in the First & Additional columns will actually be billed as "Initial I" and "Subsequent S" respectively																
	Physical Collocation - Cable Records, per request			CLO	PE1CR		I 1524.45	S 980.01	267.02							
	Physical Collocation, Cable Records, VG/DS0 Cable, per cable record (maximum 3600 records)			CLO	PE1CD		656.37		379.70							
	Physical Collocation, Cable Records, VG/DS0 Cable, per each 100 pair			CLO	PE1CO		9.65		11.84							
	Physical Collocation, Cable Records, DS1, per T1 TIE			CLO	PE1C1		4.52		5.54							
	Physical Collocation, Cable Records, DS3, per T3 TIE			CLO	PE1C3		15.81		19.39							

COLLOCATION - Kentucky														Attachment: 4 Exh B			
CATEGORY		RATE ELEMENTS	Interim	Zone	BCS	USOC	RATES($)					Svc Order Submitted Elec per LSR	Svc Order Submitted Manually per LSR	Incremental Charge - Manual Svc Order vs. Electronic-1st	Incremental Charge - Manual Svc Order vs. Electronic-Add'l	Incremental Charge - Manual Svc Order vs. Electronic-Disc 1st	Incremental Charge - Manual Svc Order vs. Electronic-Disc Add'l
							Rec	Nonrecurring		Nonrecurring Disconnect		OSS Rates($)					
								First	Add'l	First	Add'l	SOMEC	SOMAN	SOMAN	SOMAN	SOMAN	SOMAN
		Physical Collocation - Cable Records, Fiber Cable, per cable record (maximum 99 records)			CLO	PE1CB		169.63		154.85							
		Physical Collocation, Cable Records,CAT5/RJ45			CLO	PE1C5		4.52		5.54							
	Virtual to Physical																
		Physical Collocation - Virtual to Physical Collocation Relocation, per Voice Grade Circuit			CLO	PE1BV		33.00									
		Physical Collocation - Virtual to Physical Collocation Relocation, per DSO Circuit			CLO	PE1BO		33.00									
		Physical Collocation - Virtual to Physical Collocation Relocation, per DS1 Circuit			CLO	PE1B1		52.00									
		Physical Collocation - Virtual to Physical Collocation Relocation, per DS3 Circuit			CLO	PE1B3		52.00									
		Physical Collocation - Virtual to Physical Collocation In-Place, Per Voice Grade Circuit			CLO	PE1BR		22.49									
		Physical Collocation Virtual to Physical Collocation In-Place, Per DSO Circuit			CLO	PE1BP		22.49									
		Physical Collocation - Virtual to Physical Collocation In-Place, Per DS1 Circuit			CLO	PE1BS		32.71									
		Physical Collocation - Virtual to Physical Collocation In-Place, per DS3 Circuit			CLO	PE1BE		32.71									
	Entrance Cable																
		Physical Collocation - Fiber Cable Installation, Pricing, non-recurring charge, per Entrance Cable			CLO	PE1BD		1,729.11		45.16							
		Physical Collocation - Fiber Cable Support Structure, per Entrance Cable			CLO	PE1PM	19.86										
		Physical Collocation - Fiber Entrance Cable Installation, per Fiber			CLO	PE1ED		7.75									
VIRTUAL COLLOCATION																	
	Application																
		Virtual Collocation - Application Fee			AMTFS	EAF		2,419.86		1.01							
		Virtual Collocation - Co-Carrier Cross Connects/Direct Connect, Application Fee, per application			AMTFS	VE1CA		584.20									
		Virtual Collocation Administrative Only - Application Fee			AMTFS	VE1AF		742.12									
	Space Preparation																
		Virtual Collocation - Floor Space, per sq. ft.			AMTFS	ESPVX	7.99										
	Power																
		Virtual Collocation - Power, per fused amp			AMTFS	ESPAX	8.06										
	Cross Connects (Cross Connects, Co-Carrier Cross Connects, and Ports)																
		Virtual Collocation - 2-wire cross-connect, loop, provisioning			UEANL, UEA, UDN, UAL, UHL, UCL, UEQ, UNCVX, UNCDX, UNCNX	UEAC2	0.0309	24.68	23.68	12.14	10.95						
		Virtual Collocation - 4-wire cross-connect, loop, provisioning			UEA, UHL, UCL, UDL, UNCVX, UNCDX	UEAC4	0.0619	24.88	23.82	12.77	11.46						
		Virtual collocation - Special Access & UNE, cross-connect per DS1			ULR, UXTD1, UNC1X, ULDD1, U1TD1, USLEL, UNLD1, USL, UEPEX, UEPDX	CNC1X	1.48	44.23	31.98	12.81	11.57						
		Virtual collocation - Special Access & UNE, cross-connect per DS3			USL, UE3, U1TD3, UXTS1, UXTD3, UNC3X, UNCSX, ULDD3, U1TS1, ULDS1, UDLSX, UNLD3	CND3X	18.89	41.93	30.51	14.75	11.83						

COLLOCATION - Kentucky														Attachment: 4 Exh B			
CATEGORY		RATE ELEMENTS	Interim	Zone	BCS	USOC	RATES($)					Svc Order Submitted Elec per LSR	Svc Order Submitted Manually per LSR	Incremental Charge - Manual Svc Order vs. Electronic-1st	Incremental Charge - Manual Svc Order vs. Electronic-Add'l	Incremental Charge - Manual Svc Order vs. Electronic-Disc 1st	Incremental Charge - Manual Svc Order vs. Electronic-Disc Add'l
							Rec	Nonrecurring		Nonrecurring Disconnect		OSS Rates($)					
								First	Add'l	First	Add'l	SOMEC	SOMAN	SOMAN	SOMAN	SOMAN	SOMAN
		Virtual Collocation - 2-Fiber Cross Connects			UDL12, UDLO3, U1T48, U1T12, U1TO3, ULDO3, ULD12, ULD48, UDF	CNC2F	3.80	41.94	30.51	14.76	11.84						
		Virtual Collocation - 4-Fiber Cross Connects			UDL12, UDLO3, U1T48, U1T12, U1TO3, ULDO3, ULD12, ULD48, UDF	CNC4F	7.59	51.29	39.87	19.41	16.49						
		Virtual Collocation - Co-Carrier Cross Connects/Direct Connect - Fiber Cable Support Structure, per linear foot, per cable			AMTFS	VE1CB	0.0012										
		Virtual Collocation - Co-Carrier Cross Connects/Direct Connect - Copper/Coax Cable Support Structure, per linear foot, per cable			AMTFS	VE1CD	0.0018										
		Virtual Collocation 2-Wire Cross Connect, Port			UEPSX, UEPSB, UEPSE, UEPSP, UEPSR, UEP2C	VE1R2	0.0309	24.68	23.68	12.14	10.95						
		Virtual Collocation 4-Wire Cross Connect, Port			UEPDD, UEPEX	VE1R4	0.0619	24.88	23.82	12.77	11.46						
	CFA																
		Virtual Collocation - CFA Information Resend Request, per Premises, per Arrangement, per request			AMTFS	VE1QR		77.55									
	Cable Records - Note: The rates in the First & Additional columns will actually be billed as "Initial I" & "Subsequent S" respectively																
		Virtual Collocation Cable Records - per request			AMTFS	VE1BA		1,524.45	980.01	267.02							
		Virtual Collocation Cable Records - VG/DS0 Cable, per cable record			AMTFS	VE1BB		656.37		379.70							
		Virtual Collocation Cable Records - VG/DS0 Cable, per each 100 pair			AMTFS	VE1BC		9.65		11.84							
		Virtual Collocation Cable Records -DS1, per T1TIE			AMTFS	VE1BD		4.52		5.54							
		Virtual Collocation Cable Records - DS3, per T3TIE			AMTFS	VE1BE		15.81		19.39							
		Virtual Collocation Cable Records - Fiber Cable, per 99 fiber records			AMTFS	VE1BF		169.63		154.85							
		Virtual Collocation Cable Records - CAT 5/RJ45			AMTFS	VE1B5		4.52		5.54							
	Security																
		Virtual collocation - Security escort, basic time, normally scheduled work hours			AMTFS	SPTBX		33.98	21.53								
		Virtual collocation - Security escort, overtime, outside of normally scheduled work hours on a normal working day			AMTFS	SPTOX		44.26	27.81								
		Virtual collocation - Security escort, premium time, outside of a scheduled work day			AMTFS	SPTPX		54.54	34.09								
	Maintenance																
		Virtual collocation - Maintenance in CO - Basic, per half hour			AMTFS	CTRLX		56.07	21.53								
		Virtual collocation - Maintenance in CO - Overtime, per half hour			AMTFS	SPTOM		73.23	27.81								
		Virtual collocation - Maintenance in CO - Premium per half hour			AMTFS	SPTPM		90.39	34.09								
	Entrance Cable																
		Virtual Collocation - Cable Installation Charge, per cable			AMTFS	ESPCX		1,729.11		45.16							
		Virtual Collocation - Cable Support Structure, per cable			AMTFS	ESPSX	17.38										
COLLOCATION IN THE REMOTE SITE																	
	Physical Remote Site Collocation																
		Physical Collocation in the Remote Site - Application Fee			CLORS	PE1RA		617.78		338.89							
		Cabinet Space in the Remote Site per Bay/ Rack			CLORS	PE1RB	219.67										
		Physical Collocation in the Remote Site - Security Access - Key			CLORS	PE1RD		26.29									
		Physical Collocation in the Remote Site - Space Availability Report per Premises Requested			CLORS	PE1SR		232.64									

COLLOCATION - Kentucky														Attachment: 4 Exh B			
CATEGORY	RATE ELEMENTS	Interim	Zone	BCS	USOC	RATES($)					Svc Order Submitted Elec per LSR	Svc Order Submitted Manually per LSR	Incremental Charge - Manual Svc Order vs. Electronic-1st	Incremental Charge - Manual Svc Order vs. Electronic-Add'l	Incremental Charge - Manual Svc Order vs. Electronic-Disc 1st	Incremental Charge - Manual Svc Order vs. Electronic-Disc Add'l
						Rec	Nonrecurring		Nonrecurring Disconnect		OSS Rates($)					
							First	Add'l	First	Add'l	SOMEC	SOMAN	SOMAN	SOMAN	SOMAN	SOMAN
	Physical Collocation in the Remote Site - Remote Site CLLI Code Request, per CLLI Code Requested			CLORS	PE1RE		75.40									
	Remote Site DLEC Data (BRSDD), per Compact Disk, per CO			CLORS	PE1RR		233.42									
	Physical Collocation - Security Escort for Basic Time - normally scheduled work, per half hour			CLORS	PE1BT		33.98	21.53								
	Physical Collocation - Security Escort for Overtime - outside of normally scheduled working hours on a scheduled work day, per half hour			CLORS	PE1OT		44.26	27.81								
	Physical Collocation - Security Escort for Premium Time - outside of scheduled work day, per half hour			CLORS	PE1PT		54.54	34.09								
	Adjacent Remote Site Collocation															
	Remote Site-Adjacent Collocation-Application Fee			CLORS	PE1RU		755.62	755.62								
	Remote Site-Adjacent Collocation - Real Estate, per square foot			CLORS	PE1RT	0.134										
	Remote Site-Adjacent Collocation - AC Power, per breaker amp			CLORS	PE1RS	6.27										
	NOTE: If Security Escort and/or Add'l Engineering Fees become necessary for adjacent remote site collocation, the Parties will negotiate appropriate rates.															
	Virtual Remote Site Collocation															
	Virtual Collocation in the Remote Site - Application Fee			VE1RS	VE1RB		617.78		338.89							
	Virtual Collocation in the Remote Site - Per Bay/Rack of Space			VE1RS	VE1RC	219.67										
	Virtual Collocation in the Remote Site - Space Availability Report per Premises requested			VE1RS	VE1RR		232.64									
	Virtual Collocation in the Remote Site - Remote Site CLLI Code Request, per CLLI Code Requested			VE1RS	VE1RL		75.40									
ADJACENT COLLOCATION																
	Adjacent Collocation - Space Charge per Sq. Ft.			CLOAC	PE1JA	0.0173										
	Adjacent Collocation - Electrical Facility Charge per Linear Ft.			CLOAC	PE1JC	5.35										
	Adjacent Collocation - 2-Wire Cross-Connects			UEANL,UEQ,UEA,UCL, UAL, UHL, UDN	PE1JE	0.0258	24.68	23.68	12.14	10.95						
	Adjacent Collocation - 4-Wire Cross-Connects			UEA,UHL,UDL,UCL	PE1JF	0.0515	24.88	23.82	12.77	11.46						
	Adjacent Collocation - DS1 Cross-Connects			USL	PE1JG	1.37	44.23	31.98	12.81	11.57						
	Adjacent Collocation - DS3 Cross-Connects			UE3	PE1JH	18.61	41.93	30.51	14.75	11.83						
	Adjacent Collocation - 2-Fiber Cross-Connect			CLOAC	PE1JJ	3.15	41.93	30.51	14.76	11.84						
	Adjacent Collocation - 4-Fiber Cross-Connect			CLOAC	PE1JK	6.02	51.29	39.87	19.41	16.49						
	Adjacent Collocation - Application Fee			CLOAC	PE1JB		3,165.50									
	Adjacent Collocation - 120V, Single Phase Standby Power Rate per AC Breaker Amp			CLOAC	PE1JL	5.44										
	Adjacent Collocation - 240V, Single Phase Standby Power Rate per AC Breaker Amp			CLOAC	PE1JM	10.88										
	Adjacent Collocation - 120V, Three Phase Standby Power Rate per AC Breaker Amp			CLOAC	PE1JN	16.32										
	Adjacent Collocation - 277V, Three Phase Standby Power Rate per AC Breaker Amp			CLOAC	PE1JO	37.68										
	Note: Rates displaying an "I" in Interim column are interim as a result of a Commission order.															

COLLOCATION - Louisiana														Attachment: 4 Exh B			
CATEGORY		RATE ELEMENTS	Interim	Zone	BCS	USOC	RATES($)					Svc Order Submitted Elec per LSR	Svc Order Submitted Manually per LSR	Incremental Charge - Manual Svc Order vs. Electronic-1st	Incremental Charge - Manual Svc Order vs. Electronic-Add'l	Incremental Charge - Manual Svc Order vs. Electronic-Disc 1st	Incremental Charge - Manual Svc Order vs. Electronic-Disc Add'l
							Rec	Nonrecurring		Nonrecurring Disconnect		OSS Rates($)					
								First	Add'l	First	Add'l	SOMEC	SOMAN	SOMAN	SOMAN	SOMAN	SOMAN
PHYSICAL COLLOCATION																	
	Application																
		Physical Collocation - Initial Application Fee			CLO	PE1BA		1,837.24									
		Physical Collocation - Subsequent Application Fee			CLO	PE1CA		1,533.41									
		Physical Collocation - Co-Carrier Cross Connects/Direct Connect, Application Fee, per application			CLO	PE1DT		583.30									
		Physical Collocation Administrative Only - Application Fee			CLO	PE1BL		741.97									
		Physical Collocation - Application Cost, Simple Augment			CLO	PE1KS		596.35		1.22							
		Physical Collocation - Application Cost, Minor Augment			CLO	PE1KM		836.18		1.22							
		Physical Collocation - Application Cost, Intermediate Augment			CLO	PE1K1		1,061.00		1.22							
		Physical Collocation - Application Cost - Major Augment			CLO	PE1KJ		2,418.00		1.22							
	Space Preparation																
		Physical Collocation - Floor Space, per sq feet			CLO	PE1PJ	5.30										
		Physical Collocation - Space Enclosure, welded wire, first 50 square feet			CLO	PE1BX	166.40										
		Physical Collocation - Space enclosure, welded wire, first 100 square feet			CLO	PE1BW	184.50										
		Physical Collocation - Space enclosure, welded wire, each additional 50 square feet			CLO	PE1CW	18.10										
		Physical Collocation - Space Preparation - C.O. Modification per square ft.			CLO	PE1SK	2.31										
		Physical Collocation - Space Preparation, Common Systems Modifications-Cageless, per square foot			CLO	PE1SL	2.70										
		Physical Collocation - Space Preparation - Common Systems Modifications-Caged, per cage			CLO	PE1SM	91.60										
		Physical Collocation - Space Preparation - Firm Order Processing			CLO	PE1SJ		583.33									
		Physical Collocation - Space Availability Report, per Central Office Requested			CLO	PE1SR		1,044.07									
	Power																
		Physical Collocation - Power, -48V DC Power - per Fused Amp Requested			CLO	PE1PL	8.32										
		Physical Collocation - Power, 120V AC Power, Single Phase, per Breaker Amp			CLO	PE1FB	5.45										
		Physical Collocation - Power, 240V AC Power, Single Phase, per Breaker Amp			CLO	PE1FD	10.92										
		Physical Collocation - Power, 120V AC Power, Three Phase, per Breaker Amp			CLO	PE1FE	16.37										
		Physical Collocation - Power, 277V AC Power, Three Phase, per Breaker Amp			CLO	PE1FG	37.80										
	Cross Connects (Cross Connects, Co-Carrier Cross Connects, and Ports)																
		Physical Collocation - 2-wire cross-connect, loop, provisioning			UEANL,UEQ, UNCNX, UEA, UCL, UAL, UHL, UDN, UNCVX	PE1P2	0.0318	11.94	11.46								
		Physical Collocation - 4-wire cross-connect, loop, provisioning			UEA, UHL, UNCVX, UNCDX, UCL, UDL	PE1P4	0.0636	12.04	11.53								
		Physical Collocation -DS1 Cross-Connect for Physical Collocation, provisioning			WDS1L, WDS1S, UXTD1, ULDD1, USLEL, UNLD1, U1TD1, UNC1X, UEPSR, UEPSB, UEPSE, UEPSP, USL, UEPEX, UEPDX	PE1P1	1.04	21.39	15.47								

CATEGORY	RATE ELEMENTS	Interim	Zone	BCS	USOC	RATES($)					Svc Order Submitted Elec per LSR	Svc Order Submitted Manually per LSR	Incremental Charge - Manual Svc Order vs. Electronic-1st	Incremental Charge - Manual Svc Order vs. Electronic-Add'l	Incremental Charge - Manual Svc Order vs. Electronic-Disc 1st	Incremental Charge - Manual Svc Order vs. Electronic-Disc Add'l
						Rec	Nonrecurring		Nonrecurring Disconnect		OSS Rates($)					
							First	Add'l	First	Add'l	SOMEC	SOMAN	SOMAN	SOMAN	SOMAN	SOMAN
	Physical Collocation - DS3 Cross-Connect, provisioning			UE3, U1TD3, UXTD3, UXTS1, UNC3X, UNCSX, ULDD3, U1TS1, ULDS1, UNLD3, UEPEX, UEPDX, UEPSR, UEPSB, UEPSE, UEPSP	PE1P3	13.21	20.28	14.76								
	Physical Collocation - 2-Fiber Cross-Connect			CLO, ULDO3, ULD12, ULD48, U1TO3, U1T12, U1T48, UDLO3, UDL12, UDF	PE1F2	2.62	20.28	14.76								
	Physical Collocation - 4-Fiber Cross-Connect			ULDO3, ULD12, ULD48, U1TO3, U1T12, U1T48, UDLO3, UDL12, UDF, UDFCX	PE1F4	4.65	24.81	19.29								
	Physical Collocation - Co-Carrier Cross Connects/Direct Connect - Fiber Cable Support Structure, per linear foot, per cable.			CLO	PE1ES	0.001										
	Physical Collocation - Co-Carrier Cross Connect/Direct Connect - Copper/Coax Cable Support Structure, per linear foot, per cable.			CLO	PE1DS	0.0015										
	Physical Collocation 2-Wire Cross Connect, Port			UEPSR, UEPSP, UEPSE, UEPSB, UEPSX, UEP2C	PE1R2	0.0318	11.94	11.46								
	Physical Collocation 4-Wire Cross Connect, Port			UEPEX, UEPDD	PE1R4	0.0636	12.04	11.53								
Security																
	Physical Collocation - Security Escort for Basic Time - normally scheduled work, per half hour			CLO	PE1BT		16.44	10.42								
	Physical Collocation - Security Escort for Overtime - outside of normally scheduled working hours on a scheduled work day, per half hour			CLO	PE1OT		21.41	13.45								
	Physical Collocation - Security Escort for Premium Time - outside of scheduled work day, per half hour			CLO	PE1PT		26.38	16.49								
	Physical Collocation - Security Access System - Security System per Central Office, per Sq. Ft.			CLO	PE1AY	0.0224										
	Physical Collocation -Security Access System - New Card Activation, per Card Activation (First), per State			CLO	PE1A1	0.0579	27.50									
	Physical Collocation-Security Access System-Administrative Change, existing Access Card, per Request, per State, per Card			CLO	PE1AA		7.74									
	Physical Collocation - Security Access System - Replace Lost or Stolen Card, per Card			CLO	PE1AR		22.64									
	Physical Collocation - Security Access - Initial Key, per Key			CLO	PE1AK		13.01									
	Physical Collocation - Security Access - Key, Replace Lost or Stolen Key, per Key			CLO	PE1AL		13.01									
CFA																
	Physical Collocation - CFA Information Resend Request, per premises, per arrangement, per request			CLO	PE1C9		77.43									
Cable Records																
	Recurring Collocation Cable Records - per request			CLO	PE1CU	10.97										
	Recurring Collocation Cable Records - VG/DS0 Cable, per cable record			CLO	PE1CE	5.29										
	Recurring Collocation Cable Records - VG/DS0 Cable, per each 100 pair			CLO	PE1CT	0.08										
	Recurring Collocation Cable Records - DS1, per T1TIE			CLO	PE1C2	0.04										
	Recurring Collocation Cable Records - DS3, per T3TIE			CLO	PE1C4	0.13										

COLLOCATION - Louisiana														Attachment: 4 Exh B			
CATEGORY		RATE ELEMENTS	Interim	Zone	BCS	USOC	RATES($)					Svc Order Submitted Elec per LSR	Svc Order Submitted Manually per LSR	Incremental Charge - Manual Svc Order vs. Electronic-1st	Incremental Charge - Manual Svc Order vs. Electronic-Add'l	Incremental Charge - Manual Svc Order vs. Electronic-Disc 1st	Incremental Charge - Manual Svc Order vs. Electronic-Disc Add'l
							Rec	Nonrecurring		Nonrecurring Disconnect		OSS Rates($)					
								First	Add'l	First	Add'l	SOMEC	SOMAN	SOMAN	SOMAN	SOMAN	SOMAN
		Recurring Collocation Cable Records - Fiber Cable, per 99 fiber records			CLO	PE1CG	1.37										
		Physical Collocation, Cable Records,CAT5/RJ45			CLO	PE1C6	0.04										
	Virtual to Physical																
		Physical Collocation - Virtual to Physical Collocation Relocation, per Voice Grade Circuit			CLO	PE1BV		33.00									
		Physical Collocation - Virtual to Physical Collocation Relocation, per DSO Circuit			CLO	PE1BO		33.00									
		Physical Collocation - Virtual to Physical Collocation Relocation, per DS1 Circuit			CLO	PE1B1		52.00									
		Physical Collocation - Virtual to Physical Collocation Relocation, per DS3 Circuit			CLO	PE1B3		52.00									
		Physical Collocation - Virtual to Physical Collocation In-Place, Per Voice Grade Circuit			CLO	PE1BR		22.52									
		Physical Collocation Virtual to Physical Collocation In-Place, Per DSO Circuit			CLO	PE1BP		22.52									
		Physical Collocation - Virtual to Physical Collocation In-Place, Per DS1 Circuit			CLO	PE1BS		32.74									
		Physical Collocation - Virtual to Physical Collocation In-Place, per DS3 Circuit			CLO	PE1BE		32.74									
	Entrance Cable																
		Physical Collocation - Fiber Cable Installation, Pricing, non-recurring charge, per Entrance Cable			CLO	PE1BD		841.54									
		Physical Collocation - Fiber Cable Support Structure, per Entrance Cable			CLO	PE1PM	18.31										
		Physical Collocation - Fiber Entrance Cable Installation, per Fiber			CLO	PE1ED		3.88									
VIRTUAL COLLOCATION																	
	Application																
		Virtual Collocation - Application Fee			AMTFS	EAF		1,770.40									
		Virtual Collocation - Co-Carrier Cross Connects/Direct Connect, Application Fee, per application			AMTFS	VE1CA		583.30									
		Virtual Collocation Administrative Only - Application Fee			AMTFS	VE1AF		741.97									
	Space Preparation																
		Virtual Collocation - Floor Space, per sq. ft.			AMTFS	ESPVX	3.20										
	Power																
		Virtual Collocation - Power, per fused amp			AMTFS	ESPAX	8.32										
	Cross Connects (Cross Connects, Co-Carrier Cross Connects, and Ports)																
		Virtual Collocation - 2-wire cross-connect, loop, provisioning			UEANL, UEA, UDN, UAL, UHL, UCL, UEQ, UNCVX, UNCDX, UNCNX	UEAC2	0.0296	11.94	11.46								
		Virtual Collocation - 4-wire cross-connect, loop, provisioning			UEA, UHL, UCL, UDL, UNCVX, UNCDX	UEAC4	0.0591	12.04	11.53								
		Virtual collocation - Special Access & UNE, cross-connect per DS1			ULR, UXTD1, UNC1X, ULDD1, U1TD1, USLEL, UNLD1, USL, UEPEX, UEPDX	CNC1X	1.04	21.39	15.47								
		Virtual collocation - Special Access & UNE, cross-connect per DS3			USL, UE3, U1TD3, UXTS1, UXTD3, UNC3X, UNCSX, ULDD3, U1TS1, ULDS1, UDLSX, UNLD3	CND3X	13.21	20.28	14.76								

CATEGORY	RATE ELEMENTS	Interim	Zone	BCS	USOC	RATES($)					Svc Order Submitted Elec per LSR	Svc Order Submitted Manually per LSR	Incremental Charge - Manual Svc Order vs. Electronic-1st	Incremental Charge - Manual Svc Order vs. Electronic-Add'l	Incremental Charge - Manual Svc Order vs. Electronic-Disc 1st	Incremental Charge - Manual Svc Order vs. Electronic-Disc Add'l
						Rec	Nonrecurring		Nonrecurring Disconnect		OSS Rates($)					
							First	Add'l	First	Add'l	SOMEC	SOMAN	SOMAN	SOMAN	SOMAN	SOMAN
	Virtual Collocation - 2-Fiber Cross Connects			UDL12, UDLO3, U1T48, U1T12, U1TO3, ULDO3, ULD12, ULD48, UDF	CNC2F	2.65	20.29	14.76								
	Virtual Collocation - 4-Fiber Cross Connects			UDL12, UDLO3, U1T48, U1T12, U1TO3, ULDO3, ULD12, ULD48, UDF	CNC4F	5.31	24.81	19.29								
	Virtual Collocation - Co-Carrier Cross Connects/Direct Connect - Fiber Cable Support Structure, per linear foot, per cable			AMTFS	VE1CB	0.001										
	Virtual Collocation - Co-Carrier Cross Connects/Direct Connect - Copper/Coax Cable Support Structure, per linear foot, per cable			AMTFS	VE1CD	0.0015										
	Virtual Collocation 2-Wire Cross Connect, Port			UEPSX, UEPSB, UEPSE, UEPSP, UEPSR, UEP2C	VE1R2	0.0296	11.94	11.46								
	Virtual Collocation 4-Wire Cross Connect, Port			UEPDD, UEPEX	VE1R4	0.0591	12.04	11.53								
CFA																
	Virtual Collocation - CFA Information Resend Request, per Premises, per Arrangement, per request			AMTFS	VE1QR		77.43									
Cable Records																
	Virtual Collocation Cable Records - per request(LA only)			AMTFS	VE1BG	10.97										
	Virtual Collocation Cable Records - VG/DS0 Cable, per cable record(LA only)			AMTFS	VE1BH	5.29										
	Virtual Collocation Cable Records - VG/DS0 Cable, per each 100 pair(LA only)			AMTFS	VE1BJ	0.08										
	Virtual Collocation Cable Records - DS1, per T1TIE(LA only)			AMTFS	VE1BK	0.04										
	Virtual Collocation Cable Records - DS3, per T3TIE(LA only)			AMTFS	VE1BL	0.13										
	Virtual Collocation Cable Records - Fiber Cable, per 99 fiber records(LA only)			AMTFS	VE1BM	1.37										
	Virtual Collocation Cable Records - CAT 5/RJ45 (LA only)			AMTFS	VE1B6	0.04										
Security																
	Virtual collocation - Security escort, basic time, normally scheduled work hours			AMTFS	SPTBX		16.44	10.42								
	Virtual collocation - Security escort, overtime, outside of normally scheduled work hours on a normal working day			AMTFS	SPTOX		21.41	13.45								
	Virtual collocation - Security escort, premium time, outside of a scheduled work day			AMTFS	SPTPX		26.38	16.49								
Maintenance																
	Virtual collocation - Maintenance in CO - Basic, per half hour			AMTFS	CTRLX		27.12	10.42								
	Virtual collocation - Maintenance in CO - Overtime, per half hour			AMTFS	SPTOM		35.42	13.45								
	Virtual collocation - Maintenance in CO - Premium per half hour			AMTFS	SPTPM		43.72	16.49								
Entrance Cable																
	Virtual Collocation - Cable Installation Charge, per cable			AMTFS	ESPCX		841.54									
	Virtual Collocation - Cable Support Structure, per cable			AMTFS	ESPSX	16.02										
COLLOCATION IN THE REMOTE SITE																
Physical Remote Site Collocation																
	Physical Collocation in the Remote Site - Application Fee			CLORS	PE1RA		298.80									
	Cabinet Space in the Remote Site per Bay/ Rack			CLORS	PE1RB	225.39										
	Physical Collocation in the Remote Site - Security Access - Key			CLORS	PE1RD		13.01									
	Physical Collocation in the Remote Site - Space Availability Report per Premises Requested			CLORS	PE1SR		112.52									

COLLOCATION - Louisiana														Attachment: 4 Exh B			
CATEGORY	RATE ELEMENTS	Interim	Zone	BCS	USOC	RATES($)					Svc Order Submitted Elec per LSR	Svc Order Submitted Manually per LSR	Incremental Charge - Manual Svc Order vs. Electronic-1st	Incremental Charge - Manual Svc Order vs. Electronic-Add'l	Incremental Charge - Manual Svc Order vs. Electronic-Disc 1st	Incremental Charge - Manual Svc Order vs. Electronic-Disc Add'l
						Rec	Nonrecurring		Nonrecurring Disconnect		OSS Rates($)					
							First	Add'l	First	Add'l	SOMEC	SOMAN	SOMAN	SOMAN	SOMAN	SOMAN
	Physical Collocation in the Remote Site - Remote Site CLLI Code Request, per CLLI Code Requested			CLORS	PE1RE		36.47									
	Remote Site DLEC Data (BRSDD), per Compact Disk, per CO			CLORS	PE1RR		233.21									
	Physical Collocation - Security Escort for Basic Time - normally scheduled work, per half hour			CLORS	PE1BT		16.44	10.42								
	Physical Collocation - Security Escort for Overtime - outside of normally scheduled working hours on a scheduled work day, per half hour			CLORS	PE1OT		21.41	13.45								
	Physical Collocation - Security Escort for Premium Time - outside of scheduled work day, per half hour			CLORS	PE1PT		26.38	16.49								
	Adjacent Remote Site Collocation															
	Remote Site-Adjacent Collocation-Application Fee			CLORS	PE1RU		755.62	755.62								
	Remote Site-Adjacent Collocation - Real Estate, per square foot			CLORS	PE1RT	0.134										
	Remote Site-Adjacent Collocation - AC Power, per breaker amp			CLORS	PE1RS	6.27										
	NOTE: If Security Escort and/or Add'l Engineering Fees become necessary for adjacent remote site collocation, the Parties will negotiate appropriate rates.															
	Virtual Remote Site Collocation															
	Virtual Collocation in the Remote Site - Application Fee			VE1RS	VE1RB		614.73		336.08							
	Virtual Collocation in the Remote Site - Per Bay/Rack of Space			VE1RS	VE1RC	257.01										
	Virtual Collocation in the Remote Site - Space Availability Report per Premises requested			VE1RS	VE1RR		231.49									
	Virtual Collocation in the Remote Site - Remote Site CLLI Code Request, per CLLI Code Requested			VE1RS	VE1RL		75.02									
ADJACENT COLLOCATION																
	Adjacent Collocation - Space Charge per Sq. Ft.			CLOAC	PE1JA	0.0552										
	Adjacent Collocation - Electrical Facility Charge per Linear Ft.			CLOAC	PE1JC	5.61										
	Adjacent Collocation - 2-Wire Cross-Connects			UEANL,UEQ,UEA,UCL, UAL, UHL, UDN	PE1JE	0.0245	11.94	11.46								
	Adjacent Collocation - 4-Wire Cross-Connects			UEA,UHL,UDL,UCL	PE1JF	0.0491	12.04	11.53								
	Adjacent Collocation - DS1 Cross-Connects			USL	PE1JG	0.9605	21.39	15.47								
	Adjacent Collocation - DS3 Cross-Connects			UE3	PE1JH	13.01	20.28	14.76								
	Adjacent Collocation - 2-Fiber Cross-Connect			CLOAC	PE1JJ	2.20	20.28	14.76								
	Adjacent Collocation - 4-Fiber Cross-Connect			CLOAC	PE1JK	4.21	24.81	19.29								
	Adjacent Collocation - Application Fee			CLOAC	PE1JB		1,543.20									
	Adjacent Collocation - 120V, Single Phase Standby Power Rate per AC Breaker Amp			CLOAC	PE1JL	5.45										
	Adjacent Collocation - 240V, Single Phase Standby Power Rate per AC Breaker Amp			CLOAC	PE1JM	10.92										
	Adjacent Collocation - 120V, Three Phase Standby Power Rate per AC Breaker Amp			CLOAC	PE1JN	16.37										
	Adjacent Collocation - 277V, Three Phase Standby Power Rate per AC Breaker Amp			CLOAC	PE1JO	37.80										
	Note: Rates displaying an "I" in Interim column are interim as a result of a Commission order.															

COLLOCATION - Mississippi														Attachment: 4 Exh B			
CATEGORY		RATE ELEMENTS	Interim	Zone	BCS	USOC	RATES($)					Svc Order Submitted Elec per LSR	Svc Order Submitted Manually per LSR	Incremental Charge - Manual Svc Order vs. Electronic-1st	Incremental Charge - Manual Svc Order vs. Electronic-Add'l	Incremental Charge - Manual Svc Order vs. Electronic-Disc 1st	Incremental Charge - Manual Svc Order vs. Electronic-Disc Add'l
							Rec	Nonrecurring		Nonrecurring Disconnect		OSS Rates($)					
								First	Add'l	First	Add'l	SOMEC	SOMAN	SOMAN	SOMAN	SOMAN	SOMAN
PHYSICAL COLLOCATION																	
	Application																
		Physical Collocation - Initial Application Fee			CLO	PE1BA		1,890.38									
		Physical Collocation - Subsequent Application Fee			CLO	PE1CA		1,575.69									
		Physical Collocation - Co-Carrier Cross Connects/Direct Connect, Application Fee, per application			CLO	PE1DT		583.13									
		Physical Collocation Administrative Only - Application Fee			CLO	PE1BL		740.76									
		Physical Collocation - Application Cost, Simple Augment			CLO	PE1KS		597.34		1.22							
		Physical Collocation - Application Cost, Minor Augment			CLO	PE1KM		837.57		1.22							
		Physical Collocation - Application Cost, Intermediate Augment			CLO	PE1K1		1,063.00		1.22							
		Physical Collocation - Application Cost - Major Augment			CLO	PE1KJ		2,422.00		1.22							
	Space Preparation																
		Physical Collocation - Floor Space, per sq feet			CLO	PE1PJ	5.74										
		Physical Collocation - Space Enclosure, welded wire, first 50 square feet			CLO	PE1BX	165.23										
		Physical Collocation - Space enclosure, welded wire, first 100 square feet			CLO	PE1BW	183.20										
		Physical Collocation - Space enclosure, welded wire, each additional 50 square feet			CLO	PE1CW	17.97										
		Physical Collocation - Space Preparation - C.O. Modification per square ft.			CLO	PE1SK	2.30										
		Physical Collocation - Space Preparation, Common Systems Modifications-Cageless, per square foot			CLO	PE1SL	2.52										
		Physical Collocation - Space Preparation - Common Systems Modifications-Caged, per cage			CLO	PE1SM	85.67										
		Physical Collocation - Space Preparation - Firm Order Processing			CLO	PE1SJ		604.19									
		Physical Collocation - Space Availability Report, per Central Office Requested			CLO	PE1SR		1,081.40									
	Power																
		Physical Collocation - Power, -48V DC Power - per Fused Amp Requested			CLO	PE1PL	7.33										
		Physical Collocation - Power, 120V AC Power, Single Phase, per Breaker Amp			CLO	PE1FB	5.29										
		Physical Collocation - Power, 240V AC Power, Single Phase, per Breaker Amp			CLO	PE1FD	10.58										
		Physical Collocation - Power, 120V AC Power, Three Phase, per Breaker Amp			CLO	PE1FE	15.87										
		Physical Collocation - Power, 277V AC Power, Three Phase, per Breaker Amp			CLO	PE1FG	36.65										
	Cross Connects (Cross Connects, Co-Carrier Cross Connects, and Ports)																
		Physical Collocation - 2-wire cross-connect, loop, provisioning			UEANL,UEQ, UNCNX, UEA, UCL, UAL, UHL, UDN, UNCVX	PE1P2	0.0288	12.37	11.87	6.04	5.45						
		Physical Collocation - 4-wire cross-connect, loop, provisioning			UEA, UHL, UNCVX, UNCDX, UCL, UDL	PE1P4	0.0576	12.47	11.94	6.59	5.91						
		Physical Collocation -DS1 Cross-Connect for Physical Collocation, provisioning			WDS1L, WDS1S, UXTD1, ULDD1, USLEL, UNLD1, U1TD1, UNC1X, UEPSR, UEPSB, UEPSE, UEPSP, USL, UEPEX, UEPDX	PE1P1	1.14	22.16	16.02	6.60	5.97						

CATEGORY		RATE ELEMENTS	Interim	Zone	BCS	USOC	RATES($)					Svc Order Submitted Elec per LSR	Svc Order Submitted Manually per LSR	Incremental Charge - Manual Svc Order vs. Electronic-1st	Incremental Charge - Manual Svc Order vs. Electronic-Add'l	Incremental Charge - Manual Svc Order vs. Electronic-Disc 1st	Incremental Charge - Manual Svc Order vs. Electronic-Disc Add'l
								Nonrecurring		Nonrecurring Disconnect		OSS Rates($)					
							Rec	First	Add'l	First	Add'l	SOMEC	SOMAN	SOMAN	SOMAN	SOMAN	SOMAN
		Physical Collocation - DS3 Cross-Connect, provisioning			UE3, U1TD3, UXTD3, UXTS1, UNC3X, UNCSX, ULDD3, U1TS1, ULDS1, UNLD3, UEPEX, UEPDX, UEPSR, UEPSB, UEPSE, UEPSP	PE1P3	14.49	21.01	15.29	7.61	6.10						
		Physical Collocation - 2-Fiber Cross-Connect			CLO, ULDO3, ULD12, ULD48, U1TO3, U1T12, U1T48, UDLO3, UDL12, UDF	PE1F2	2.87	21.01	15.29	7.61	6.10						
		Physical Collocation - 4-Fiber Cross-Connect			ULDO3, ULD12, ULD48, U1TO3, U1T12, U1T48, UDLO3, UDL12, UDF, UDFCX	PE1F4	5.10	25.70	19.97	10.01	8.50						
		Physical Collocation - Co-Carrier Cross Connects/Direct Connect - Fiber Cable Support Structure, per linear foot, per cable.			CLO	PE1ES	0.001										
		Physical Collocation - Co-Carrier Cross Connect/Direct Connect - Copper/Coax Cable Support Structure, per linear foot, per cable.			CLO	PE1DS	0.0015										
		Physical Collocation 2-Wire Cross Connect, Port			UEPSR, UEPSP, UEPSE, UEPSB, UEPSX, UEP2C	PE1R2	0.0288	12.37	11.87	6.04	5.45		15.75				
		Physical Collocation 4-Wire Cross Connect, Port			UEPEX, UEPDD	PE1R4	0.0576	12.47	11.94	6.59	5.91		15.75				
	Security																
		Physical Collocation - Security Escort for Basic Time - normally scheduled work, per half hour			CLO	PE1BT		17.02	10.79								
		Physical Collocation - Security Escort for Overtime - outside of normally scheduled working hours on a scheduled work day, per half hour			CLO	PE1OT		22.17	13.94								
		Physical Collocation - Security Escort for Premium Time - outside of scheduled work day, per half hour			CLO	PE1PT		27.32	17.08								
		Physical Collocation - Security Access System, Security System, per Central Office			CLO	PE1AX	75.23										
		Physical Collocation -Security Access System - New Card Activation, per Card Activation (First), per State			CLO	PE1A1	0.0576	27.95									
		Physical Collocation-Security Access System-Administrative Change, existing Access Card, per Request, per State, per Card			CLO	PE1AA		7.84									
		Physical Collocation - Security Access System - Replace Lost or Stolen Card, per Card			CLO	PE1AR		22.91									
		Physical Collocation - Security Access - Initial Key, per Key			CLO	PE1AK		13.17									
		Physical Collocation - Security Access - Key, Replace Lost or Stolen Key, per Key			CLO	PE1AL		13.17									
	CFA																
		Physical Collocation - CFA Information Resend Request, per premises, per arrangement, per request			CLO	PE1C9		77.41									
	Cable Records - Note: The rates in the First & Additional columns will actually be billed as "Initial I" and "Subsequent S" respectively																
		Physical Collocation - Cable Records, per request			CLO	PE1CR		I 763.69	S 490.94	133.77							
		Physical Collocation, Cable Records, VG/DS0 Cable, per cable record (maximum 3600 records)			CLO	PE1CD		328.81		190.22							
		Physical Collocation, Cable Records, VG/DS0 Cable, per each 100 pair			CLO	PE1CO		4.84		5.93							
		Physical Collocation, Cable Records, DS1, per T1 TIE			CLO	PE1C1		2.27		2.78							
		Physical Collocation, Cable Records, DS3, per T3 TIE			CLO	PE1C3		7.92		9.72							

COLLOCATION - Mississippi														Attachment: 4 Exh B			
CATEGORY		RATE ELEMENTS	Interim	Zone	BCS	USOC	RATES($)					Svc Order Submitted Elec per LSR	Svc Order Submitted Manually per LSR	Incremental Charge - Manual Svc Order vs. Electronic-1st	Incremental Charge - Manual Svc Order vs. Electronic-Add'l	Incremental Charge - Manual Svc Order vs. Electronic-Disc 1st	Incremental Charge - Manual Svc Order vs. Electronic-Disc Add'l
							Rec	Nonrecurring		Nonrecurring Disconnect		OSS Rates($)					
								First	Add'l	First	Add'l	SOMEC	SOMAN	SOMAN	SOMAN	SOMAN	SOMAN
		Physical Collocation - Cable Records, Fiber Cable, per cable record (maximum 99 records)			CLO	PE1CB		84.98		77.58							
		Physical Collocation, Cable Records,CAT5/RJ45			CLO	PE1C5		2.27		2.78							
	Virtual to Physical																
		Physical Collocation - Virtual to Physical Collocation Relocation, per Voice Grade Circuit			CLO	PE1BV		33.00									
		Physical Collocation - Virtual to Physical Collocation Relocation, per DSO Circuit			CLO	PE1BO		33.00									
		Physical Collocation - Virtual to Physical Collocation Relocation, per DS1 Circuit			CLO	PE1B1		52.00									
		Physical Collocation - Virtual to Physical Collocation Relocation, per DS3 Circuit			CLO	PE1B3		52.00									
		Physical Collocation - Virtual to Physical Collocation In-Place, Per Voice Grade Circuit			CLO	PE1BR		22.54									
		Physical Collocation Virtual to Physical Collocation In-Place, Per DSO Circuit			CLO	PE1BP		22.54									
		Physical Collocation - Virtual to Physical Collocation In-Place, Per DS1 Circuit			CLO	PE1BS		32.78									
		Physical Collocation - Virtual to Physical Collocation In-Place, per DS3 Circuit			CLO	PE1BE		32.78									
	Entrance Cable																
		Physical Collocation - Fiber Cable Installation, Pricing, non-recurring charge, per Entrance Cable			CLO	PE1BD		926.27		22.62							
		Physical Collocation - Fiber Cable Support Structure, per Entrance Cable			CLO	PE1PM	17.42										
		Physical Collocation - Fiber Entrance Cable Installation, per Fiber			CLO	PE1ED		3.89									
VIRTUAL COLLOCATION																	
	Application																
		Virtual Collocation - Application Fee			AMTFS	EAF		1,212.25		0.51							
		Virtual Collocation - Co-Carrier Cross Connects/Direct Connect, Application Fee, per application			AMTFS	VE1CA		583.13									
		Virtual Collocation Administrative Only - Application Fee			AMTFS	VE1AF		740.76									
	Space Preparation																
		Virtual Collocation - Floor Space, per sq. ft.			AMTFS	ESPVX	5.74										
	Power																
		Virtual Collocation - Power, per fused amp			AMTFS	ESPAX	7.33										
	Cross Connects (Cross Connects, Co-Carrier Cross Connects, and Ports)																
		Virtual Collocation - 2-wire cross-connect, loop, provisioning			UEANL, UEA, UDN, UAL, UHL, UCL, UEQ, UNCVX, UNCDX, UNCNX	UEAC2	0.0268	12.37	11.87	6.04	5.45						
		Virtual Collocation - 4-wire cross-connect, loop, provisioning			UEA, UHL, UCL, UDL, UNCVX, UNCDX	UEAC4	0.0536	12.47	11.94	6.59	5.91						
		Virtual Collocation - Special Access & UNE, cross-connect per DS1			ULR, UXTD1, UNC1X, ULDD1, U1TD1, USLEL, UNLD1, USL, UEPEX, UEPDX	CNC1X	1.14	22.16	16.02	6.60	5.97						
		Virtual collocation - Special Access & UNE, cross-connect per DS3			USL, UE3, U1TD3, UXTS1, UXTD3, UNC3X, UNCSX, ULDD3, U1TS1, ULDS1, UDLSX, UNLD3	CND3X	14.49	21.01	15.29	7.61	6.10						

COLLOCATION - Mississippi														Attachment: 4 Exh B			
CATEGORY		RATE ELEMENTS	Interim	Zone	BCS	USOC	RATES($)					Svc Order Submitted Elec per LSR	Svc Order Submitted Manually per LSR	Incremental Charge - Manual Svc Order vs. Electronic-1st	Incremental Charge - Manual Svc Order vs. Electronic-Add'l	Incremental Charge - Manual Svc Order vs. Electronic-Disc 1st	Incremental Charge - Manual Svc Order vs. Electronic-Disc Add'l
							Rec	Nonrecurring		Nonrecurring Disconnect		OSS Rates($)					
								First	Add'l	First	Add'l	SOMEC	SOMAN	SOMAN	SOMAN	SOMAN	SOMAN
		Virtual Collocation - 2-Fiber Cross Connects			UDL12, UDLO3, U1T48, U1T12, U1TO3, ULDO3, ULD12, ULD48, UDF	CNC2F	2.91	21.01	15.29	7.61	6.10						
		Virtual Collocation - 4-Fiber Cross Connects			UDL12, UDLO3, U1T48, U1T12, U1TO3, ULDO3, ULD12, ULD48, UDF	CNC4F	5.82	25.70	19.97	10.01	8.50						
		Virtual Collocation - Co-Carrier Cross Connects/Direct Connect - Fiber Cable Support Structure, per linear foot, per cable			AMTFS	VE1CB	0.001										
		Virtual Collocation - Co-Carrier Cross Connects/Direct Connect - Copper/Coax Cable Support Structure, per linear foot, per cable			AMTFS	VE1CD	0.0015										
		Virtual Collocation 2-Wire Cross Connect, Port			UEPSX, UEPSB, UEPSE, UEPSP, UEPSR, UEP2C	VE1R2	0.0268	12.37	11.87	6.04	5.45						
		Virtual Collocation 4-Wire Cross Connect, Port			UEPDD, UEPEX	VE1R4	0.0536	12.47	11.94	6.59	5.91						
	CFA																
		Virtual Collocation - CFA Information Resend Request, per Premises, per Arrangement, per request			AMTFS	VE1QR		77.41									
	Cable Records - Note: The rates in the First & Additional columns will actually be billed as "Initial I" & "Subsequent S" respectively																
		Virtual Collocation Cable Records - per request			AMTFS	VE1BA		763.69	490.94	133.77							
		Virtual Collocation Cable Records - VG/DS0 Cable, per cable record			AMTFS	VE1BB		328.81		190.22							
		Virtual Collocation Cable Records - VG/DS0 Cable, per each 100 pair			AMTFS	VE1BC		4.84		5.93							
		Virtual Collocation Cable Records - DS1, per T1TIE			AMTFS	VE1BD		2.27		2.78							
		Virtual Collocation Cable Records - DS3, per T3TIE			AMTFS	VE1BE		7.92		9.72							
		Virtual Collocation Cable Records - Fiber Cable, per 99 fiber records			AMTFS	VE1BF		84.98		77.58							
		Virtual Collocation Cable Records - CAT 5/RJ45			AMTFS	VE1B5		2.27		2.78							
	Security																
		Virtual collocation - Security escort, basic time, normally scheduled work hours			AMTFS	SPTBX		17.02	10.79								
		Virtual collocation - Security escort, overtime, outside of normally scheduled work hours on a normal working day			AMTFS	SPTOX		22.17	13.94								
		Virtual collocation - Security escort, premium time, outside of a scheduled work day			AMTFS	SPTPX		27.32	17.08								
	Maintenance																
		Virtual collocation - Maintenance in CO - Basic, per half hour			AMTFS	CTRLX		28.09	10.79								
		Virtual collocation - Maintenance in CO - Overtime, per half hour			AMTFS	SPTOM		36.69	13.94								
		Virtual collocation - Maintenance in CO - Premium per half hour			AMTFS	SPTPM		45.28	17.08								
	Entrance Cable																
		Virtual Collocation - Cable Installation Charge, per cable			AMTFS	ESPCX		926.27		22.62							
		Virtual Collocation - Cable Support Structure, per cable			AMTFS	ESPSX	15.24										
COLLOCATION IN THE REMOTE SITE																	
	Physical Remote Site Collocation																
		Physical Collocation in the Remote Site - Application Fee			CLORS	PE1RA		309.48		168.63							
		Cabinet Space in the Remote Site per Bay/ Rack			CLORS	PE1RB	210.05										
		Physical Collocation in the Remote Site - Security Access - Key			CLORS	PE1RD		13.17									
		Physical Collocation in the Remote Site - Space Availability Report per Premises Requested			CLORS	PE1SR		116.54									

COLLOCATION - Mississippi														Attachment: 4 Exh B			
CATEGORY	RATE ELEMENTS	Interim	Zone	BCS	USOC	RATES($)					Svc Order Submitted Elec per LSR	Svc Order Submitted Manually per LSR	Incremental Charge - Manual Svc Order vs. Electronic-1st	Incremental Charge - Manual Svc Order vs. Electronic-Add'l	Incremental Charge - Manual Svc Order vs. Electronic-Disc 1st	Incremental Charge - Manual Svc Order vs. Electronic-Disc Add'l
						Rec	Nonrecurring		Nonrecurring Disconnect		OSS Rates($)					
							First	Add'l	First	Add'l	SOMEC	SOMAN	SOMAN	SOMAN	SOMAN	SOMAN
	Physical Collocation in the Remote Site - Remote Site CLLI Code Request, per CLLI Code Requested			CLORS	PE1RE		37.77									
	Remote Site DLEC Data (BRSDD), per Compact Disk, per CO			CLORS	PE1RR		233.14									
	Physical Collocation - Security Escort for Basic Time - normally scheduled work, per half hour			CLORS	PE1BT		17.02	10.79								
	Physical Collocation - Security Escort for Overtime - outside of normally scheduled working hours on a scheduled work day, per half hour			CLORS	PE1OT		22.17	13.94								
	Physical Collocation - Security Escort for Premium Time - outside of scheduled work day, per half hour			CLORS	PE1PT		27.32	17.08								
	Adjacent Remote Site Collocation															
	Remote Site-Adjacent Collocation-Application Fee			CLORS	PE1RU		755.62	755.62								
	Remote Site-Adjacent Collocation - Real Estate, per square foot			CLORS	PE1RT	0.134										
	Remote Site-Adjacent Collocation - AC Power, per breaker amp			CLORS	PE1RS	6.27										
	NOTE: If Security Escort and/or Add'l Engineering Fees become necessary for adjacent remote site collocation, the Parties will negotiate appropriate rates.															
	Virtual Remote Site Collocation															
	Virtual Collocation in the Remote Site - Application Fee			VE1RS	VE1RB		309.48		168.63							
	Virtual Collocation in the Remote Site - Per Bay/Rack of Space			VE1RS	VE1RC	210.05										
	Virtual Collocation in the Remote Site - Space Availability Report per Premises requested			VE1RS	VE1RR		116.54									
	Virtual Collocation in the Remote Site - Remote Site CLLI Code Request, per CLLI Code Requested			VE1RS	VE1RL		37.77									
ADJACENT COLLOCATION																
	Adjacent Collocation - Space Charge per Sq. Ft.			CLOAC	PE1JA	0.0678										
	Adjacent Collocation - Electrical Facility Charge per Linear Ft.			CLOAC	PE1JC	4.68										
	Adjacent Collocation - 2-Wire Cross-Connects			UEANL,UEQ,UEA,UCL, UAL, UHL, UDN	PE1JE	0.0223	12.37	11.87	6.04	5.45						
	Adjacent Collocation - 4-Wire Cross-Connects			UEA,UHL,UDL,UCL	PE1JF	0.0446	12.47	11.94	6.59	5.91						
	Adjacent Collocation - DS1 Cross-Connects			USL	PE1JG	1.05	22.16	16.02	6.60	5.97						
	Adjacent Collocation - DS3 Cross-Connects			UE3	PE1JH	14.27	21.01	15.29	7.61	6.10						
	Adjacent Collocation - 2-Fiber Cross-Connect			CLOAC	PE1JJ	2.42	21.01	15.29	7.61	6.10						
	Adjacent Collocation - 4-Fiber Cross-Connect			CLOAC	PE1JK	4.62	25.70	19.97	10.01	8.50						
	Adjacent Collocation - Application Fee			CLOAC	PE1JB		1,585.83									
	Adjacent Collocation - 120V, Single Phase Standby Power Rate per AC Breaker Amp			CLOAC	PE1JL	5.29										
	Adjacent Collocation - 240V, Single Phase Standby Power Rate per AC Breaker Amp			CLOAC	PE1JM	10.58										
	Adjacent Collocation - 120V, Three Phase Standby Power Rate per AC Breaker Amp			CLOAC	PE1JN	15.87										
	Adjacent Collocation - 277V, Three Phase Standby Power Rate per AC Breaker Amp			CLOAC	PE1JO	36.65										
	Note: Rates displaying an "I" in Interim column are interim as a result of a Commission order.															

COLLOCATION - North Carolina														Attachment 4 Exh: B			
CATEGORY		RATE ELEMENTS	Interim	Zone	BCS	USOC	RATES($)					Svc Order Submitted Elec per LSR	Svc Order Submitted Manually per LSR	Incremental Charge - Manual Svc Order vs. Electronic-1st	Incremental Charge - Manual Svc Order vs. Electronic-Add'l	Incremental Charge - Manual Svc Order vs. Electronic-Disc 1st	Incremental Charge - Manual Svc Order vs. Electronic-Disc Add'l
							Rec	Nonrecurring		Nonrecurring Disconnect		OSS Rates($)					
								First	Add'l	First	Add'l	SOMEC	SOMAN	SOMAN	SOMAN	SOMAN	SOMAN
PHYSICAL COLLOCATION																	
	Application																
		Physical Collocation - Initial Application Fee			CLO	PE1BA		2,322.00									
		Physical Collocation - Subsequent Application Fee			CLO	PE1CA		2,311.00									
		Physical Collocation - Co-Carrier Cross Connects/Direct Connect, Application Fee, per application			CLO	PE1DT		317.20									
		Physical Collocation Administrative Only - Application Fee			CLO	PE1BL		741.44									
		Physical Collocation - Application Cost, Simple Augment			CLO	PE1KS		269.83		1.15							
		Physical Collocation - Application Cost, Minor Augment			CLO	PE1KM		493.40		1.15							
		Physical Collocation - Application Cost, Intermediate Augment			CLO	PE1K1		1,012.00		1.15							
		Physical Collocation - Application Cost - Major Augment			CLO	PE1KJ		2,343.00		1.15							
	Space Preparation																
		Physical Collocation - Floor Space, per sq feet			CLO	PE1PJ	2.69										
		Physical Collocation - Space Enclosure, welded wire, first 50 square feet			CLO	PE1BX		534.44									
		Physical Collocation - Space enclosure, welded wire, first 100 square feet			CLO	PE1BW		559.81									
		Physical Collocation - Space enclosure, welded wire, each additional 50 square feet			CLO	PE1CW		25.37									
		Physical Collocation - Space Preparation - C.O. Modification per square ft.			CLO	PE1SK	2.42										
		Physical Collocation - Space Preparation, Common Systems Modifications-Cageless, per square foot			CLO	PE1SL	2.88										
		Physical Collocation - Space Preparation - Common Systems Modifications-Caged, per cage			CLO	PE1SM	97.98										
		Physical Collocation - Space Preparation - Firm Order Processing			CLO	PE1SJ		1,196.00									
		Physical Collocation - Space Availability Report, per Central Office Requested			CLO	PE1SR		2,140.00									
	Power																
		Physical Collocation - Power, -48V DC Power - per Fused Amp Requested			CLO	PE1PL	7.65										
		Physical Collocation - Power, 120V AC Power, Single Phase, per Breaker Amp			CLO	PE1FB	5.50										
		Physical Collocation - Power, 240V AC Power, Single Phase, per Breaker Amp			CLO	PE1FD	11.01										
		Physical Collocation - Power, 120V AC Power, Three Phase, per Breaker Amp			CLO	PE1FE	16.51										
		Physical Collocation - Power, 277V AC Power, Three Phase, per Breaker Amp			CLO	PE1FG	38.12										
	Cross Connects (Cross Connects, Co-Carrier Cross Connects, and Ports)																
		Physical Collocation - 2-wire cross-connect, loop, provisioning			UEANL,UEQ, UNCNX, UEA, UCL, UAL, UHL, UDN, UNCVX	PE1P2	0.0309	19.77	14.95								
		Physical Collocation - 4-wire cross-connect, loop, provisioning			UEA, UHL, UNCVX, UNCDX, UCL, UDL	PE1P4	0.0618	19.95	15.05								
		Physical Collocation -DS1 Cross-Connect for Physical Collocation, provisioning			WDS1L, WDS1S, UXTD1, ULDD1, USLEL, UNLD1, U1TD1, UNC1X, UEPSR, UEPSB, UEPSE, UEPSP, USL, UEPEX, UEPDX	PE1P1	1.38	39.15	23.20								

COLLOCATION - North Carolina														Attachment 4 Exh: B			
CATEGORY		RATE ELEMENTS	Interim	Zone	BCS	USOC	RATES($)					Svc Order Submitted Elec per LSR	Svc Order Submitted Manually per LSR	Incremental Charge - Manual Svc Order vs. Electronic-1st	Incremental Charge - Manual Svc Order vs. Electronic-Add'l	Incremental Charge - Manual Svc Order vs. Electronic-Disc 1st	Incremental Charge - Manual Svc Order vs. Electronic-Disc Add'l
							Rec	Nonrecurring		Nonrecurring Disconnect		OSS Rates($)					
								First	Add'l	First	Add'l	SOMEC	SOMAN	SOMAN	SOMAN	SOMAN	SOMAN
		Physical Collocation - DS3 Cross-Connect, provisioning			UE3, U1TD3, UXTD3, UXTS1, UNC3X, UNCSX, ULDD3, U1TS1, ULDS1, UNLD3, UEPEX, UEPDX, UEPSR, UEPSB, UEPSE, UEPSP	PE1P3	17.62	38.25	21.94								
		Physical Collocation - 2-Fiber Cross-Connect			CLO, ULDO3, ULD12, ULD48, U1TO3, U1T12, U1T48, UDLO3, UDL12, UDF	PE1F2	3.50	38.25	21.94								
		Physical Collocation - 4-Fiber Cross-Connect			ULDO3, ULD12, ULD48, U1TO3, U1T12, U1T48, UDLO3, UDL12, UDF, UDFCX	PE1F4	6.20	43.96	26.17								
		Physical Collocation - Co-Carrier Cross Connects/Direct Connect - Fiber Cable Support Structure, per linear foot, per cable.			CLO	PE1ES	0.0028										
		Physical Collocation - Co-Carrier Cross Connect/Direct Connect - Copper/Coax Cable Support Structure, per linear foot, per cable.			CLO	PE1DS	0.0041										
		Physical Collocation 2-Wire Cross Connect, Port			UEPSR, UEPSP, UEPSE, UEPSB, UEPSX, UEP2C	PE1R2	0.0309	19.77	14.95					26.94	12.76		
		Physical Collocation 4-Wire Cross Connect, Port			UEPEX, UEPDD	PE1R4	0.0618	19.95	15.05					26.94	12.76		
	Security																
		Physical Collocation - Security Escort for Basic Time - normally scheduled work, per half hour			CLO	PE1BT		33.68	21.34								
		Physical Collocation - Security Escort for Overtime - outside of normally scheduled working hours on a scheduled work day, per half hour			CLO	PE1OT		43.87	27.57								
		Physical Collocation - Security Escort for Premium Time - outside of scheduled work day, per half hour			CLO	PE1PT		54.06	33.80								
		Physical Collocation - Security Access System - Security System per Central Office, per Sq. Ft.			CLO	PE1AY	0.0135										
		Physical Collocation -Security Access System - New Card Activation, per Card Activation (First), per State			CLO	PE1A1	0.0622	15.00									
		Physical Collocation-Security Access System-Administrative Change, existing Access Card, per Request, per State, per Card			CLO	PE1AA		15.51									
		Physical Collocation - Security Access System - Replace Lost or Stolen Card, per Card			CLO	PE1AR		15.00									
		Physical Collocation - Security Access - Initial Key, per Key			CLO	PE1AK		15.00									
		Physical Collocation - Security Access - Key, Replace Lost or Stolen Key, per Key			CLO	PE1AL		15.00									
	CFA																
		Physical Collocation - CFA Information Resend Request, per premises, per arrangement, per request			CLO	PE1C9		77.48									
	Cable Records - Note: The rates in the First & Additional columns will actually be billed as "Initial I" and "Subsequent S" respectively																
		Physical Collocation - Cable Records, per request			CLO	PE1CR		I 1458.00	S 937.29	245.00	245.00						
		Physical Collocation, Cable Records, VG/DS0 Cable, per cable record (maximum 3600 records)			CLO	PE1CD		622.69	622.69	346.35	346.35						
		Physical Collocation, Cable Records, VG/DS0 Cable, per each 100 pair			CLO	PE1CO		8.77	8.77	10.32	10.32						
		Physical Collocation, Cable Records, DS1, per T1 TIE			CLO	PE1C1		4.35	4.35	5.11	5.11						
		Physical Collocation, Cable Records, DS3, per T3 TIE			CLO	PE1C3		15.22	15.22	17.90	17.90						

COLLOCATION - North Carolina														Attachment 4 Exh: B			
CATEGORY		RATE ELEMENTS	Interim	Zone	BCS	USOC	RATES($)					Svc Order Submitted Elec per LSR	Svc Order Submitted Manually per LSR	Incremental Charge - Manual Svc Order vs. Electronic-1st	Incremental Charge - Manual Svc Order vs. Electronic-Add'l	Incremental Charge - Manual Svc Order vs. Electronic-Disc 1st	Incremental Charge - Manual Svc Order vs. Electronic-Disc Add'l
							Rec	Nonrecurring		Nonrecurring Disconnect		OSS Rates($)					
								First	Add'l	First	Add'l	SOMEC	SOMAN	SOMAN	SOMAN	SOMAN	SOMAN
		Physical Collocation - Cable Records, Fiber Cable, per cable record (maximum 99 records)			CLO	PE1CB		163.61	163.61	143.32	143.32						
		Physical Collocation, Cable Records,CAT5/RJ45			CLO	PE1C5		2.27		2.78							
	Virtual to Physical																
		Physical Collocation - Virtual to Physical Collocation Relocation, per Voice Grade Circuit			CLO	PE1BV		33.00									
		Physical Collocation - Virtual to Physical Collocation Relocation, per DSO Circuit			CLO	PE1BO		33.00									
		Physical Collocation - Virtual to Physical Collocation Relocation, per DS1 Circuit			CLO	PE1B1		52.00									
		Physical Collocation - Virtual to Physical Collocation Relocation, per DS3 Circuit			CLO	PE1B3		52.00									
		Physical Collocation - Virtual to Physical Collocation In-Place, Per Voice Grade Circuit			CLO	PE1BR		69.51	20.45								
		Physical Collocation Virtual to Physical Collocation In-Place, Per DSO Circuit			CLO	PE1BP		69.51	20.45								
		Physical Collocation - Virtual to Physical Collocation In-Place, Per DS1 Circuit			CLO	PE1BS		78.93	29.87								
		Physical Collocation - Virtual to Physical Collocation In-Place, per DS3 Circuit			CLO	PE1BE		75.11	26.04								
	Entrance Cable																
		Physical Collocation - Fiber Cable Installation, Pricing, non-recurring charge, per Entrance Cable			CLO	PE1BD		1,233.00									
		Physical Collocation - Fiber Cable Support Structure, per Entrance Cable			CLO	PE1PM	20.57										
		Physical Collocation - Fiber Entrance Cable Installation, per Fiber			CLO	PE1ED		7.79									
VIRTUAL COLLOCATION																	
	Application																
		Virtual Collocation - Application Fee			AMTFS	EAF		1,195.00									
		Virtual Collocation - Co-Carrier Cross Connects/Direct Connect, Application Fee, per application			AMTFS	VE1CA		317.20									
		Virtual Collocation Administrative Only - Application Fee			AMTFS	VE1AF		741.44									
	Space Preparation																
		Virtual Collocation - Floor Space, per sq. ft.	I		AMTFS	ESPVX	2.69										
	Power																
		Virtual Collocation - Power, per fused amp	I		AMTFS	ESPAX	7.65										
	Cross Connects (Cross Connects, Co-Carrier Cross Connects, and Ports)																
		Virtual Collocation - 2-wire cross-connect, loop, provisioning			UEANL, UEA, UDN, UAL, UHL, UCL, UEQ, UNCVX, UNCDX, UNCNX	UEAC2	0.0225	19.77	14.95								
		Virtual Collocation - 4-wire cross-connect, loop, provisioning			UEA, UHL, UCL, UDL, UNCVX, UNCDX	UEAC4	0.0449	19.95	15.05								
		Virtual collocation - Special Access & UNE, cross-connect per DS1			ULR, UXTD1, UNC1X, ULDD1, U1TD1, USLEL, UNLD1, USL, UEPEX, UEPDX	CNC1X	0.4195	39.15	23.20								
		Virtual collocation - Special Access & UNE, cross-connect per DS3			USL, UE3, U1TD3, UXTS1, UXTD3, UNC3X, UNCSX, ULDD3, U1TS1, ULDS1, UDLSX, UNLD3	CND3X	4.41	38.25	21.94								

COLLOCATION - North Carolina														Attachment 4 Exh: B			
CATEGORY		RATE ELEMENTS	Interim	Zone	BCS	USOC	RATES($)					Svc Order Submitted Elec per LSR	Svc Order Submitted Manually per LSR	Incremental Charge - Manual Svc Order vs. Electronic-1st	Incremental Charge - Manual Svc Order vs. Electronic-Add'l	Incremental Charge - Manual Svc Order vs. Electronic-Disc 1st	Incremental Charge - Manual Svc Order vs. Electronic-Disc Add'l
							Rec	Nonrecurring		Nonrecurring Disconnect		OSS Rates($)					
								First	Add'l	First	Add'l	SOMEC	SOMAN	SOMAN	SOMAN	SOMAN	SOMAN
		Virtual Collocation - 2-Fiber Cross Connects			UDL12, UDLO3, U1T48, U1T12, U1TO3, ULDO3, ULD12, ULD48, UDF	CNC2F	1.96	38.25	21.94								
		Virtual Collocation - 4-Fiber Cross Connects			UDL12, UDLO3, U1T48, U1T12, U1TO3, ULDO3, ULD12, ULD48, UDF	CNC4F	3.93	43.96	26.17								
		Virtual Collocation - Co-Carrier Cross Connects/Direct Connect - Fiber Cable Support Structure, per linear foot, per cable			AMTFS	VE1CB	0.0028										
		Virtual Collocation - Co-Carrier Cross Connects/Direct Connect - Copper/Coax Cable Support Structure, per linear foot, per cable			AMTFS	VE1CD	0.0041										
		Virtual Collocation 2-Wire Cross Connect, Port			UEPSX, UEPSB, UEPSE, UEPSP, UEPSR, UEP2C	VE1R2	0.0225	19.77	14.95								
		Virtual Collocation 4-Wire Cross Connect, Port			UEPDD, UEPEX	VE1R4	0.0449	19.95	15.05								
	CFA																
		Virtual Collocation - CFA Information Resend Request, per Premises, per Arrangement, per request			AMTFS	VE1QR		77.48									
	Cable Records - Note: The rates in the First & Additional columns will actually be billed as "Initial I" & "Subsequent S" respectively																
		Virtual Collocation Cable Records - per request			AMTFS	VE1BA		I 1458.00	S 937.29	245.00	245.00						
		Virtual Collocation Cable Records - VG/DS0 Cable, per cable record			AMTFS	VE1BB		622.69	622.69	346.35	346.35						
		Virtual Collocation Cable Records - VG/DS0 Cable, per each 100 pair			AMTFS	VE1BC		8.77	8.77	10.32	10.32						
		Virtual Collocation Cable Records - DS1, per T1TIE			AMTFS	VE1BD		4.35	4.35	5.11	5.11						
		Virtual Collocation Cable Records - DS3, per T3TIE			AMTFS	VE1BE		15.22	15.22	17.90	17.90						
		Virtual Collocation Cable Records - Fiber Cable, per 99 fiber records			AMTFS	VE1BF		163.61	163.61	143.32	143.32						
		Virtual Collocation Cable Records - CAT 5/RJ45			AMTFS	VE1B5		4.35	4.35	5.11	5.11						
	Security																
		Virtual collocation - Security escort, basic time, normally scheduled work hours			AMTFS	SPTBX		33.68	21.34								
		Virtual collocation - Security escort, overtime, outside of normally scheduled work hours on a normal working day			AMTFS	SPTOX		43.87	27.57								
		Virtual collocation - Security escort, premium time, outside of a scheduled work day			AMTFS	SPTPX		54.06	33.80								
	Maintenance																
		Virtual collocation - Maintenance in CO - Basic, per half hour			AMTFS	CTRLX		52.03	21.22								
		Virtual collocation - Maintenance in CO - Overtime, per half hour			AMTFS	SPTOM		69.48	27.81								
		Virtual collocation - Maintenance in CO - Premium per half hour			AMTFS	SPTPM		86.94	34.40								
	Entrance Cable																
		Virtual Collocation - Cable Installation Charge, per cable			AMTFS	ESPCX		1,233.00									
		Virtual Collocation - Cable Support Structure, per cable			AMTFS	ESPSX	13.28										
COLLOCATION IN THE REMOTE SITE																	
	Physical Remote Site Collocation																
		Physical Collocation in the Remote Site - Application Fee			CLORS	PE1RA		589.38		258.38							
		Cabinet Space in the Remote Site per Bay/ Rack			CLORS	PE1RB	218.07										
		Physical Collocation in the Remote Site - Security Access - Key			CLORS	PE1RD		15.00									
		Physical Collocation in the Remote Site - Space Availability Report per Premises Requested			CLORS	PE1SR		215.55									

COLLOCATION - North Carolina														Attachment 4 Exh: B			
CATEGORY		RATE ELEMENTS	Interim	Zone	BCS	USOC	RATES($)					Svc Order Submitted Elec per LSR	Svc Order Submitted Manually per LSR	Incremental Charge - Manual Svc Order vs. Electronic-1st	Incremental Charge - Manual Svc Order vs. Electronic-Add'l	Incremental Charge - Manual Svc Order vs. Electronic-Disc 1st	Incremental Charge - Manual Svc Order vs. Electronic-Disc Add'l
							Rec	Nonrecurring		Nonrecurring Disconnect		OSS Rates($)					
								First	Add'l	First	Add'l	SOMEC	SOMAN	SOMAN	SOMAN	SOMAN	SOMAN
		Physical Collocation in the Remote Site - Remote Site CLLI Code Request, per CLLI Code Requested			CLORS	PE1RE		70.65									
		Remote Site DLEC Data (BRSDD), per Compact Disk, per CO			CLORS	PE1RR		232.94									
		Physical Collocation - Security Escort for Basic Time - normally scheduled work, per half hour			CLORS	PE1BT		33.68	21.34								
		Physical Collocation - Security Escort for Overtime - outside of normally scheduled working hours on a scheduled work day, per half hour			CLORS	PE1OT		43.87	27.57								
		Physical Collocation - Security Escort for Premium Time - outside of scheduled work day, per half hour			CLORS	PE1PT		54.06	33.80								
	Adjacent Remote Site Collocation																
		Remote Site-Adjacent Collocation-Application Fee			CLORS	PE1RU		755.62	755.62								
		Remote Site-Adjacent Collocation - Real Estate, per square foot			CLORS	PE1RT	0.134										
		Remote Site-Adjacent Collocation - AC Power, per breaker amp			CLORS	PE1RS	6.27										
	NOTE: If Security Escort and/or Add'l Engineering Fees become necessary for adjacent remote site collocation, the Parties will negotiate appropriate rates.																
	Virtual Remote Site Collocation																
		Virtual Collocation in the Remote Site - Application Fee			VE1RS	VE1RB		589.38		258.38							
		Virtual Collocation in the Remote Site - Per Bay/Rack of Space			VE1RS	VE1RC	218.07										
		Virtual Collocation in the Remote Site - Space Availability Report per Premises requested			VE1RS	VE1RR		215.55									
		Virtual Collocation in the Remote Site - Remote Site CLLI Code Request, per CLLI Code Requested			VE1RS	VE1RL		70.65									
ADJACENT COLLOCATION																	
		Adjacent Collocation - Space Charge per Sq. Ft.			CLOAC	PE1JA	0.1555										
		Adjacent Collocation - Electrical Facility Charge per Linear Ft.			CLOAC	PE1JC	5.78										
		Adjacent Collocation - 2-Wire Cross-Connects			UEANL,UEQ,UEA,UCL, UAL, UHL, UDN	PE1JE	0.0239	19.77	14.95								
		Adjacent Collocation - 4-Wire Cross-Connects			UEA,UHL,UDL,UCL	PE1JF	0.0477	19.95	15.05								
		Adjacent Collocation - DS1 Cross-Connects			USL	PE1JG	1.28	39.15	23.20								
		Adjacent Collocation - DS3 Cross-Connects			UE3	PE1JH	17.35	38.25	21.94								
		Adjacent Collocation - 2-Fiber Cross-Connect			CLOAC	PE1JJ	2.94	38.25	21.94								
		Adjacent Collocation - 4-Fiber Cross-Connect			CLOAC	PE1JK	5.62	43.96	26.17								
		Adjacent Collocation - Application Fee			CLOAC	PE1JB		2,266.00		0.5842							
		Adjacent Collocation - 120V, Single Phase Standby Power Rate per AC Breaker Amp			CLOAC	PE1JL	5.50										
		Adjacent Collocation - 240V, Single Phase Standby Power Rate per AC Breaker Amp			CLOAC	PE1JM	11.01										
		Adjacent Collocation - 120V, Three Phase Standby Power Rate per AC Breaker Amp			CLOAC	PE1JN	16.51										
		Adjacent Collocation - 277V, Three Phase Standby Power Rate per AC Breaker Amp			CLOAC	PE1JO	38.12										
	Note: Rates displaying an "I" in Interim column are interim as a result of a Commission order.																

COLLOCATION - South Carolina														Attachment 4 Exh: B			
CATEGORY		RATE ELEMENTS	Interim	Zone	BCS	USOC	RATES($)					Svc Order Submitted Elec per LSR	Svc Order Submitted Manually per LSR	Incremental Charge - Manual Svc Order vs. Electronic-1st	Incremental Charge - Manual Svc Order vs. Electronic-Add'l	Incremental Charge - Manual Svc Order vs. Electronic-Disc 1st	Incremental Charge - Manual Svc Order vs. Electronic-Disc Add'l
							Rec	Nonrecurring		Nonrecurring Disconnect		OSS Rates($)					
								First	Add'l	First	Add'l	SOMEC	SOMAN	SOMAN	SOMAN	SOMAN	SOMAN
PHYSICAL COLLOCATION																	
	Application																
		Physical Collocation - Initial Application Fee			CLO	PE1BA		1,883.67		0.51							
		Physical Collocation - Subsequent Application Fee			CLO	PE1CA		1,570.10		0.51							
		Physical Collocation - Co-Carrier Cross Connects/Direct Connect, Application Fee, per application			CLO	PE1DT		584.42									
		Physical Collocation Administrative Only - Application Fee			CLO	PE1BL		743.66									
		Physical Collocation - Application Cost, Simple Augment			CLO	PE1KS		594.27		1.21							
		Physical Collocation - Application Cost, Minor Augment			CLO	PE1KM		833.26		1.21							
		Physical Collocation - Application Cost, Intermediate Augment			CLO	PE1K1		1,058.00		1.21							
		Physical Collocation - Application Cost - Major Augment			CLO	PE1KJ		2,409.00		1.21							
	Space Preparation																
		Physical Collocation - Floor Space, per sq feet			CLO	PE1PJ	3.95										
		Physical Collocation - Space Enclosure, welded wire, first 50 square feet			CLO	PE1BX	197.69										
		Physical Collocation - Space enclosure, welded wire, first 100 square feet			CLO	PE1BW	219.19										
		Physical Collocation - Space enclosure, welded wire, each additional 50 square feet			CLO	PE1CW	21.50										
		Physical Collocation - Space Preparation - C.O. Modification per square ft.			CLO	PE1SK	2.75										
		Physical Collocation - Space Preparation, Common Systems Modifications-Cageless, per square foot			CLO	PE1SL	3.24										
		Physical Collocation - Space Preparation - Common Systems Modifications-Caged, per cage			CLO	PE1SM	110.16										
		Physical Collocation - Space Preparation - Firm Order Processing			CLO	PE1SJ		602.05									
		Physical Collocation - Space Availability Report, per Central Office Requested			CLO	PE1SR		1,077.57									
	Power																
		Physical Collocation - Power, -48V DC Power - per Fused Amp Requested			CLO	PE1PL	9.19										
		Physical Collocation - Power, 120V AC Power, Single Phase, per Breaker Amp			CLO	PE1FB	5.67										
		Physical Collocation - Power, 240V AC Power, Single Phase, per Breaker Amp			CLO	PE1FD	11.36										
		Physical Collocation - Power, 120V AC Power, Three Phase, per Breaker Amp			CLO	PE1FE	17.03										
		Physical Collocation - Power, 277V AC Power, Three Phase, per Breaker Amp			CLO	PE1FG	39.33										
	Cross Connects (Cross Connects, Co-Carrier Cross Connects, and Ports)																
		Physical Collocation - 2-wire cross-connect, loop, provisioning			UEANL,UEQ, UNCNX, UEA, UCL, UAL, UHL, UDN, UNCVX	PE1P2	0.0341	12.32	11.83	6.04	5.45						
		Physical Collocation - 4-wire cross-connect, loop, provisioning			UEA, UHL, UNCVX, UNCDX, UCL, UDL	PE1P4	0.0682	12.42	11.90	6.40	5.74						
		Physical Collocation -DS1 Cross-Connect for Physical Collocation, provisioning			WDS1L, WDS1S, UXTD1, ULDD1, USLEL, UNLD1, U1TD1, UNC1X, UEPSR, UEPSB, UEPSE, UEPSP, USL, UEPEX, UEPDX	PE1P1	1.12	22.08	15.96	6.42	5.80						

COLLOCATION - South Carolina														Attachment 4 Exh: B			
CATEGORY		RATE ELEMENTS	Interim	Zone	BCS	USOC	RATES($)					Svc Order Submitted Elec per LSR	Svc Order Submitted Manually per LSR	Incremental Charge - Manual Svc Order vs. Electronic-1st	Incremental Charge - Manual Svc Order vs. Electronic-Add'l	Incremental Charge - Manual Svc Order vs. Electronic-Disc 1st	Incremental Charge - Manual Svc Order vs. Electronic-Disc Add'l
							Rec	Nonrecurring		Nonrecurring Disconnect		OSS Rates($)					
								First	Add'l	First	Add'l	SOMEC	SOMAN	SOMAN	SOMAN	SOMAN	SOMAN
		Physical Collocation - DS3 Cross-Connect, provisioning			UE3, U1TD3, UXTD3, UXTS1, UNC3X, UNCSX, ULDD3, U1TS1, ULDS1, UNLD3, UEPEX, UEPDX, UEPSR, UEPSB, UEPSE, UEPSP	PE1P3	14.21	20.94	15.23	7.39	5.93						
		Physical Collocation - 2-Fiber Cross-Connect			CLO, ULDO3, ULD12, ULD48, U1TO3, U1T12, U1T48, UDLO3, UDL12, UDF	PE1F2	2.82	20.94	15.23	7.40	5.93						
		Physical Collocation - 4-Fiber Cross-Connect			ULDO3, ULD12, ULD48, U1TO3, U1T12, U1T48, UDLO3, UDL12, UDF, UDFCX	PE1F4	5.01	25.61	19.90	9.73	8.26						
		Physical Collocation - Co-Carrier Cross Connects/Direct Connect - Fiber Cable Support Structure, per linear foot, per cable.			CLO	PE1ES	0.001										
		Physical Collocation - Co-Carrier Cross Connect/Direct Connect - Copper/Coax Cable Support Structure, per linear foot, per cable.			CLO	PE1DS	0.0015										
		Physical Collocation 2-Wire Cross Connect, Port			UEPSR, UEPSP, UEPSE, UEPSB, UEPSX, UEP2C	PE1R2	0.0341	12.32	11.83	6.04	5.45		15.69				
		Physical Collocation 4-Wire Cross Connect, Port			UEPEX, UEPDD	PE1R4	0.0682	12.42	11.90	6.40	5.74		15.69				
	Security																
		Physical Collocation - Security Escort for Basic Time - normally scheduled work, per half hour			CLO	PE1BT		16.96	10.75								
		Physical Collocation - Security Escort for Overtime - outside of normally scheduled working hours on a scheduled work day, per half hour			CLO	PE1OT		22.10	13.89								
		Physical Collocation - Security Escort for Premium Time - outside of scheduled work day, per half hour			CLO	PE1PT		27.23	17.02								
		Physical Collocation - Security Access System, Security System, per Central Office			CLO	PE1AX	74.72										
		Physical Collocation -Security Access System - New Card Activation, per Card Activation (First), per State			CLO	PE1A1	0.0601	27.85									
		Physical Collocation-Security Access System-Administrative Change, existing Access Card, per Request, per State, per Card			CLO	PE1AA		7.81									
		Physical Collocation - Security Access System - Replace Lost or Stolen Card, per Card			CLO	PE1AR		22.83									
		Physical Collocation - Security Access - Initial Key, per Key			CLO	PE1AK		13.13									
		Physical Collocation - Security Access - Key, Replace Lost or Stolen Key, per Key			CLO	PE1AL		13.13									
	CFA																
		Physical Collocation - CFA Information Resend Request, per premises, per arrangement, per request			CLO	PE1C9		77.71									
	Cable Records - Note: The rates in the First & Additional columns will actually be billed as "Initial I" and "Subsequent S" respectively																
		Physical Collocation - Cable Records, per request			CLO	PE1CR		I 760.98	S 489.20	133.29							
		Physical Collocation, Cable Records, VG/DS0 Cable, per cable record (maximum 3600 records)			CLO	PE1CD		327.65		189.54							
		Physical Collocation, Cable Records, VG/DS0 Cable, per each 100 pair			CLO	PE1CO		4.82		5.91							
		Physical Collocation, Cable Records, DS1, per T1 TIE			CLO	PE1C1		2.26		2.77							
		Physical Collocation, Cable Records, DS3, per T3 TIE			CLO	PE1C3		7.90		9.68							

COLLOCATION - South Carolina														Attachment 4 Exh: B			
CATEGORY		RATE ELEMENTS	Interim	Zone	BCS	USOC	RATES($)					Svc Order Submitted Elec per LSR	Svc Order Submitted Manually per LSR	Incremental Charge - Manual Svc Order vs. Electronic-1st	Incremental Charge - Manual Svc Order vs. Electronic-Add'l	Incremental Charge - Manual Svc Order vs. Electronic-Disc 1st	Incremental Charge - Manual Svc Order vs. Electronic-Disc Add'l
							Rec	Nonrecurring		Nonrecurring Disconnect		OSS Rates($)					
								First	Add'l	First	Add'l	SOMEC	SOMAN	SOMAN	SOMAN	SOMAN	SOMAN
		Physical Collocation - Cable Records, Fiber Cable, per cable record (maximum 99 records)			CLO	PE1CB		84.68		77.30							
		Physical Collocation, Cable Records,CAT5/RJ45			CLO	PE1C5		2.26		2.77							
	Virtual to Physical																
		Physical Collocation - Virtual to Physical Collocation Relocation, per Voice Grade Circuit			CLO	PE1BV		33.00									
		Physical Collocation - Virtual to Physical Collocation Relocation, per DSO Circuit			CLO	PE1BO		33.00									
		Physical Collocation - Virtual to Physical Collocation Relocation, per DS1 Circuit			CLO	PE1B1		52.00									
		Physical Collocation - Virtual to Physical Collocation Relocation, per DS3 Circuit			CLO	PE1B3		52.00									
		Physical Collocation - Virtual to Physical Collocation In-Place, Per Voice Grade Circuit			CLO	PE1BR		22.43									
		Physical Collocation Virtual to Physical Collocation In-Place, Per DSO Circuit			CLO	PE1BP		22.43									
		Physical Collocation - Virtual to Physical Collocation In-Place, Per DS1 Circuit			CLO	PE1BS		32.61									
		Physical Collocation - Virtual to Physical Collocation In-Place, per DS3 Circuit			CLO	PE1BE		32.61									
	Entrance Cable																
		Physical Collocation - Fiber Cable Installation, Pricing, non-recurring charge, per Entrance Cable			CLO	PE1BD		794.22		22.54							
		Physical Collocation - Fiber Cable Support Structure, per Entrance Cable			CLO	PE1PM	21.33										
		Physical Collocation - Fiber Entrance Cable Installation, per Fiber			CLO	PE1ED		3.87									
VIRTUAL COLLOCATION																	
	Application																
		Virtual Collocation - Application Fee			AMTFS	EAF		1,207.95		0.51							
		Virtual Collocation - Co-Carrier Cross Connects/Direct Connect, Application Fee, per application			AMTFS	VE1CA		584.42									
		Virtual Collocation Administrative Only - Application Fee			AMTFS	VE1AF		743.66									
	Space Preparation																
		Virtual Collocation - Floor Space, per sq. ft.			AMTFS	ESPVX	3.95										
	Power																
		Virtual Collocation - Power, per fused amp			AMTFS	ESPAX	9.19										
	Cross Connects (Cross Connects, Co-Carrier Cross Connects, and Ports)																
		Virtual Collocation - 2-wire cross-connect, loop, provisioning			UEANL, UEA, UDN, UAL, UHL, UCL, UEQ, UNCVX, UNCDX, UNCNX	UEAC2	0.0317	12.32	11.83	6.04	5.45						
		Virtual Collocation - 4-wire cross-connect, loop, provisioning			UEA, UHL, UCL, UDL, UNCVX, UNCDX	UEAC4	0.0634	12.42	11.90	6.40	5.74						
		Virtual collocation - Special Access & UNE,cross-connect per DS1			ULR, UXTD1, UNC1X, ULDD1, U1TD1, USLEL, UNLD1, USL, UEPEX, UEPDX	CNC1X	1.12	22.08	15.96	6.42	5.80						
		Virtual collocation - Special Access & UNE, cross-connect per DS3			USL, UE3, U1TD3, UXTS1, UXTD3, UNC3X, UNCSX, ULDD3, U1TS1, ULDS1, UDLSX, UNLD3	CND3X	14.21	20.94	15.23	7.39	5.93						

COLLOCATION - South Carolina														Attachment 4 Exh: B			
CATEGORY		RATE ELEMENTS	Interim	Zone	BCS	USOC	RATES($)					Svc Order Submitted Elec per LSR	Svc Order Submitted Manually per LSR	Incremental Charge - Manual Svc Order vs. Electronic-1st	Incremental Charge - Manual Svc Order vs. Electronic-Add'l	Incremental Charge - Manual Svc Order vs. Electronic-Disc 1st	Incremental Charge - Manual Svc Order vs. Electronic-Disc Add'l
							Rec	Nonrecurring		Nonrecurring Disconnect		OSS Rates($)					
								First	Add'l	First	Add'l	SOMEC	SOMAN	SOMAN	SOMAN	SOMAN	SOMAN
		Virtual Collocation - 2-Fiber Cross Connects			UDL12, UDLO3, U1T48, U1T12, U1TO3, ULDO3, ULD12, ULD48, UDF	CNC2F	2.86	20.94	15.23	7.40	5.93						
		Virtual Collocation - 4-Fiber Cross Connects			UDL12, UDLO3, U1T48, U1T12, U1TO3, ULDO3, ULD12, ULD48, UDF	CNC4F	5.71	25.61	19.90	9.73	8.26						
		Virtual Collocation - Co-Carrier Cross Connects/Direct Connect - Fiber Cable Support Structure, per linear foot, per cable			AMTFS	VE1CB	0.001										
		Virtual Collocation - Co-Carrier Cross Connects/Direct Connect - Copper/Coax Cable Support Structure, per linear foot, per cable			AMTFS	VE1CD	0.0015										
		Virtual Collocation 2-Wire Cross Connect, Port			UEPSX, UEPSB, UEPSE, UEPSP, UEPSR, UEP2C	VE1R2	0.0317	12.32	11.83	6.04	5.45						
		Virtual Collocation 4-Wire Cross Connect, Port			UEPDD, UEPEX	VE1R4	0.0634	12.42	11.90	6.40	5.74						
	CFA																
		Virtual Collocation - CFA Information Resend Request, per Premises, per Arrangement, per request			AMTFS	VE1QR		77.71									
	Cable Records - Note: The rates in the First & Additional columns will actually be billed as "Initial I" & "Subsequent S" respectively																
		Virtual Collocation Cable Records - per request			AMTFS	VE1BA		I 760.98	S 489.20	133.29							
		Virtual Collocation Cable Records - VG/DS0 Cable, per cable record			AMTFS	VE1BB		327.65		189.54							
		Virtual Collocation Cable Records - VG/DS0 Cable, per each 100 pair			AMTFS	VE1BC		4.82		5.91							
		Virtual Collocation Cable Records - DS1, per T1TIE			AMTFS	VE1BD		2.26		2.77							
		Virtual Collocation Cable Records - DS3, per T3TIE			AMTFS	VE1BE		7.90		9.68							
		Virtual Collocation Cable Records - Fiber Cable, per 99 fiber records			AMTFS	VE1BF		84.68		77.30							
		Virtual Collocation Cable Records - CAT 5/RJ45			AMTFS	VE1B5		2.26		2.77							
	Security																
		Virtual collocation - Security escort, basic time, normally scheduled work hours			AMTFS	SPTBX		16.96	10.75								
		Virtual collocation - Security escort, overtime, outside of normally scheduled work hours on a normal working day			AMTFS	SPTOX		22.10	13.89								
		Virtual collocation - Security escort, premium time, outside of a scheduled work day			AMTFS	SPTPX		27.23	17.02								
	Maintenance																
		Virtual collocation - Maintenance in CO - Basic, per half hour			AMTFS	CTRLX		27.99	10.75								
		Virtual collocation - Maintenance in CO - Overtime, per half hour			AMTFS	SPTOM		36.56	13.89								
		Virtual collocation - Maintenance in CO - Premium per half hour			AMTFS	SPTPM		45.12	17.02								
	Entrance Cable																
		Virtual Collocation - Cable Installation Charge, per cable			AMTFS	ESPCX		794.22		22.54							
		Virtual Collocation - Cable Support Structure, per cable			AMTFS	ESPSX	18.66										
COLLOCATION IN THE REMOTE SITE																	
	Physical Remote Site Collocation																
		Physical Collocation in the Remote Site - Application Fee			CLORS	PE1RA		308.38		168.60							
		Cabinet Space in the Remote Site per Bay/ Rack			CLORS	PE1RB	246.44										
		Physical Collocation in the Remote Site - Security Access - Key			CLORS	PE1RD		13.13									
		Physical Collocation in the Remote Site - Space Availability Report per Premises Requested			CLORS	PE1SR		116.13									

COLLOCATION - South Carolina														Attachment 4 Exh: B			
CATEGORY	RATE ELEMENTS	Interim	Zone	BCS	USOC	RATES($)					Svc Order Submitted Elec per LSR	Svc Order Submitted Manually per LSR	Incremental Charge - Manual Svc Order vs. Electronic-1st	Incremental Charge - Manual Svc Order vs. Electronic-Add'l	Incremental Charge - Manual Svc Order vs. Electronic-Disc 1st	Incremental Charge - Manual Svc Order vs. Electronic-Disc Add'l
						Rec	Nonrecurring		Nonrecurring Disconnect		OSS Rates($)					
							First	Add'l	First	Add'l	SOMEC	SOMAN	SOMAN	SOMAN	SOMAN	SOMAN
	Physical Collocation in the Remote Site - Remote Site CLLI Code Request, per CLLI Code Requested			CLORS	PE1RE		37.64									
	Remote Site DLEC Data (BRSDD), per Compact Disk, per CO			CLORS	PE1RR		234.50									
	Physical Collocation - Security Escort for Basic Time - normally scheduled work, per half hour			CLORS	PE1BT		16.96	10.75								
	Physical Collocation - Security Escort for Overtime - outside of normally scheduled working hours on a scheduled work day, per half hour			CLORS	PE1OT		22.10	13.89								
	Physical Collocation - Security Escort for Premium Time - outside of scheduled work day, per half hour			CLORS	PE1PT		27.23	17.02								
Adjacent Remote Site Collocation																
	Remote Site-Adjacent Collocation-Application Fee			CLORS	PE1RU		755.62	755.62								
	Remote Site-Adjacent Collocation - Real Estate, per square foot			CLORS	PE1RT	0.134										
	Remote Site-Adjacent Collocation - AC Power, per breaker amp			CLORS	PE1RS	6.27										
NOTE: If Security Escort and/or Add'l Engineering Fees become necessary for adjacent remote site collocation, the Parties will negotiate appropriate rates.																
Virtual Remote Site Collocation																
	Virtual Collocation in the Remote Site - Application Fee			VE1RS	VE1RB		616.76		337.19							
	Virtual Collocation in the Remote Site - Per Bay/Rack of Space			VE1RS	VE1RC	246.44										
	Virtual Collocation in the Remote Site - Space Availability Report per Premises requested			VE1RS	VE1RR		232.25									
	Virtual Collocation in the Remote Site - Remote Site CLLI Code Request, per CLLI Code Requested			VE1RS	VE1RL		75.27									
ADJACENT COLLOCATION																
	Adjacent Collocation - Space Charge per Sq. Ft.			CLOAC	PE1JA	0.0939										
	Adjacent Collocation - Electrical Facility Charge per Linear Ft.			CLOAC	PE1JC	6.40										
	Adjacent Collocation - 2-Wire Cross-Connects			UEANL,UEQ,UEA,UCL, UAL, UHL, UDN	PE1JE	0.0264	12.32	11.83	6.04	5.45						
	Adjacent Collocation - 4-Wire Cross-Connects			UEA,UHL,UDL,UCL	PE1JF	0.0527	12.42	11.90	6.40	5.74						
	Adjacent Collocation - DS1 Cross-Connects			USL	PE1JG	1.03	22.08	15.96	6.42	5.80						
	Adjacent Collocation - DS3 Cross-Connects			UE3	PE1JH	14.00	20.94	15.23	7.39	5.93						
	Adjacent Collocation - 2-Fiber Cross-Connect			CLOAC	PE1JJ	2.37	20.94	15.23	7.40	5.93						
	Adjacent Collocation - 4-Fiber Cross-Connect			CLOAC	PE1JK	4.53	25.61	19.90	9.73	8.26						
	Adjacent Collocation - Application Fee			CLOAC	PE1JB		1,580.20									
	Adjacent Collocation - 120V, Single Phase Standby Power Rate per AC Breaker Amp			CLOAC	PE1JL	5.67										
	Adjacent Collocation - 240V, Single Phase Standby Power Rate per AC Breaker Amp			CLOAC	PE1JM	11.36										
	Adjacent Collocation - 120V, Three Phase Standby Power Rate per AC Breaker Amp			CLOAC	PE1JN	17.03										
	Adjacent Collocation - 277V, Three Phase Standby Power Rate per AC Breaker Amp			CLOAC	PE1JO	39.33										
Note: Rates displaying an "I" in Interim column are interim as a result of a Commission order.																

COLLOCATION - Tennessee														Attachment: 4 Exh B			
CATEGORY		RATE ELEMENTS	Interim	Zone	BCS	USOC	RATES($)					Svc Order Submitted Elec per LSR	Svc Order Submitted Manually per LSR	Incremental Charge - Manual Svc Order vs. Electronic-1st	Incremental Charge - Manual Svc Order vs. Electronic-Add'l	Incremental Charge - Manual Svc Order vs. Electronic-Disc 1st	Incremental Charge - Manual Svc Order vs. Electronic-Disc Add'l
							Rec	Nonrecurring		Nonrecurring Disconnect		OSS Rates($)					
								First	Add'l	First	Add'l	SOMEC	SOMAN	SOMAN	SOMAN	SOMAN	SOMAN
PHYSICAL COLLOCATION																	
	Application																
		Physical Collocation - Initial Application Fee			CLO	PE1BA		1,285.98									
		Physical Collocation - Subsequent Application Fee			CLO	PE1CA		1,085.48									
		Physical Collocation - Co-Carrier Cross Connects/Direct Connect, Application Fee, per application			CLO	PE1DT		585.09									
		Physical Collocation - Power Reconfiguration Only, Application Fee			CLO	PE1PR		400.10									
		Physical Collocation Administrative Only - Application Fee			CLO	PE1BL		743.25									
	Space Preparation																
		Physical Collocation - Floor Space, per sq feet			CLO	PE1PJ	5.94										
		Physical Collocation - Space Enclosure, welded wire, first 50 square feet			CLO	PE1BX	197.09										
		Physical Collocation - Space enclosure, welded wire, first 100 square feet			CLO	PE1BW	218.53										
		Physical Collocation - Space enclosure, welded wire, each additional 50 square feet			CLO	PE1CW	21.44										
		Physical Collocation - Space Preparation - C.O. Modification per square ft.			CLO	PE1SK	2.74										
		Physical Collocation - Space Preparation, Common Systems Modifications-Cageless, per square foot			CLO	PE1SL	2.95										
		Physical Collocation - Space Preparation - Common Systems Modifications-Caged, per cage			CLO	PE1SM	100.14										
		Physical Collocation - Space Preparation - Firm Order Processing			CLO	PE1SJ		1,204.00									
		Physical Collocation - Space Availability Report, per Central Office Requested	I		CLO	PE1SR		2,027.00									
	Power																
		Physical Collocation - Power, -48V DC Power - per Fused Amp Requested			CLO	PE1PL	8.87										
		Physical Collocation - Power, 120V AC Power, Single Phase, per Breaker Amp			CLO	PE1FB	5.60										
		Physical Collocation - Power, 240V AC Power, Single Phase, per Breaker Amp			CLO	PE1FD	11.22										
		Physical Collocation - Power, 120V AC Power, Three Phase, per Breaker Amp			CLO	PE1FE	16.82										
		Physical Collocation - Power, 277V AC Power, Three Phase, per Breaker Amp			CLO	PE1FG	38.84										
	Cross Connects (Cross Connects, Co-Carrier Cross Connects, and Ports)																
		Physical Collocation - 2-wire cross-connect, loop, provisioning			UEANL,UEQ, UNCNX, UEA, UCL, UAL, UHL, UDN, UNCVX	PE1P2	0.033	33.82	31.92								
		Physical Collocation - 4-wire cross-connect, loop, provisioning			UEA, UHL, UNCVX, UNCDX, UCL, UDL	PE1P4	0.066	33.94	31.95								
		Physical Collocation -DS1 Cross-Connect for Physical Collocation, provisioning			WDS1L, WDS1S, UXTD1, ULDD1, USLEL, UNLD1, U1TD1, UNC1X, UEPSR, UEPSB, UEPSE, UEPSP, USL, UEPEX, UEPDX	PE1P1	1.51	53.27	40.16								

CATEGORY	RATE ELEMENTS	Interim	Zone	BCS	USOC	RATES($)					Svc Order Submitted Elec per LSR	Svc Order Submitted Manually per LSR	Incremental Charge - Manual Svc Order vs. Electronic-1st	Incremental Charge - Manual Svc Order vs. Electronic-Add'l	Incremental Charge - Manual Svc Order vs. Electronic-Disc 1st	Incremental Charge - Manual Svc Order vs. Electronic-Disc Add'l
						Rec	Nonrecurring		Nonrecurring Disconnect		OSS Rates($)					
							First	Add'l	First	Add'l	SOMEC	SOMAN	SOMAN	SOMAN	SOMAN	SOMAN
	Physical Collocation - DS3 Cross-Connect, provisioning			UE3, U1TD3, UXTD3, UXTS1, UNC3X, UNCSX, ULDD3, U1TS1, ULDS1, UNLD3, UEPEX, UEPDX, UEPSR, UEPSB, UEPSE, UEPSP	PE1P3	19.26	52.37	38.89								
	Physical Collocation - 2-Fiber Cross-Connect			CLO, ULDO3, ULD12, ULD48, U1TO3, U1T12, U1T48, UDLO3, UDL12, UDF	PE1F2	15.64	41.56	29.82	12.96	10.34			2.69	2.69	1.56	1.56
	Physical Collocation - 4-Fiber Cross-Connect			ULDO3, ULD12, ULD48, U1TO3, U1T12, U1T48, UDLO3, UDL12, UDF, UDFCX	PE1F4	28.11	50.53	38.78	16.97	14.35			2.69	2.69	1.56	1.56
	Physical Collocation - Co-Carrier Cross Connects/Direct Connect - Fiber Cable Support Structure, per linear foot, per cable.			CLO	PE1ES	0.0013										
	Physical Collocation - Co-Carrier Cross Connect/Direct Connect - Copper/Coax Cable Support Structure, per linear foot, per cable.			CLO	PE1DS	0.0019										
	Physical Collocation 2-Wire Cross Connect, Port			UEPSR, UEPSP, UEPSE, UEPSB, UEPSX, UEP2C	PE1R2	0.033	33.82	31.92					20.35	10.54	13.32	1.40
	Physical Collocation 4-Wire Cross Connect, Port			UEPEX, UEPDD	PE1R4	0.066	33.94	31.95					20.35	10.54	13.32	1.40
Security																
	Physical Collocation - Security Escort for Basic Time - normally scheduled work, per half hour			CLO	PE1BT		33.91	21.49								
	Physical Collocation - Security Escort for Overtime - outside of normally scheduled working hours on a scheduled work day, per half hour			CLO	PE1OT		44.17	27.76								
	Physical Collocation - Security Escort for Premium Time - outside of scheduled work day, per half hour			CLO	PE1PT		54.42	34.02								
	Physical Collocation - Security Access System - Security System per Central Office			CLO	PE1AX	55.99										
	Physical Collocation -Security Access System - New Card Activation, per Card Activation (First), per State			CLO	PE1A1	0.059	55.67									
	Physical Collocation-Security Access System-Administrative Change, existing Access Card, per Request, per State, per Card			CLO	PE1AA		15.61									
	Physical Collocation - Security Access System - Replace Lost or Stolen Card, per Card			CLO	PE1AR		45.64									
	Physical Collocation - Security Access - Initial Key, per Key			CLO	PE1AK		26.24									
	Physical Collocation - Security Access - Key, Replace Lost or Stolen Key, per Key			CLO	PE1AL		26.24									
CFA																
	Physical Collocation - CFA Information Resend Request, per premises, per arrangement, per request			CLO	PE1C9		77.67									
Cable Records																
	Physical Collocation - Cable Records, per request			CLO	PE1CR		1,711.00									
	Physical Collocation, Cable Records, VG/DS0 Cable, per cable record (maximum 3600 records)			CLO	PE1CD		925.06									
	Physical Collocation, Cable Records, VG/DS0 Cable, per each 100 pair			CLO	PE1CO		18.05									
	Physical Collocation, Cable Records, DS1, per T1 TIE			CLO	PE1C1		8.45									
	Physical Collocation, Cable Records, DS3, per T3 TIE			CLO	PE1C3		29.57									

COLLOCATION - Tennessee														Attachment: 4 Exh B			
CATEGORY		RATE ELEMENTS	Interim	Zone	BCS	USOC	RATES($)					Svc Order Submitted Elec per LSR	Svc Order Submitted Manually per LSR	Incremental Charge - Manual Svc Order vs. Electronic-1st	Incremental Charge - Manual Svc Order vs. Electronic-Add'l	Incremental Charge - Manual Svc Order vs. Electronic-Disc 1st	Incremental Charge - Manual Svc Order vs. Electronic-Disc Add'l
								Nonrecurring		Nonrecurring Disconnect		OSS Rates($)					
							Rec	First	Add'l	First	Add'l	SOMEC	SOMAN	SOMAN	SOMAN	SOMAN	SOMAN
		Physical Collocation - Cable Records, Fiber Cable, per cable record (maximum 99 records)			CLO	PE1CB		279.42									
		Physical Collocation, Cable Records,CAT5/RJ45			CLO	PE1C5		8.45									
	Virtual to Physical																
		Physical Collocation - Virtual to Physical Collocation Relocation, per Voice Grade Circuit			CLO	PE1BV		33.00									
		Physical Collocation - Virtual to Physical Collocation Relocation, per DSO Circuit			CLO	PE1BO		33.00									
		Physical Collocation - Virtual to Physical Collocation Relocation, per DS1 Circuit			CLO	PE1B1		52.00									
		Physical Collocation - Virtual to Physical Collocation Relocation, per DS3 Circuit			CLO	PE1B3		52.00									
		Physical Collocation - Virtual to Physical Collocation In-Place, Per Voice Grade Circuit			CLO	PE1BR		21.11									
		Physical Collocation Virtual to Physical Collocation In-Place, Per DSO Circuit			CLO	PE1BP		21.11									
		Physical Collocation - Virtual to Physical Collocation In-Place, Per DS1 Circuit			CLO	PE1BS		30.69									
		Physical Collocation - Virtual to Physical Collocation In-Place, per DS3 Circuit			CLO	PE1BE		30.69									
	Entrance Cable																
		Physical Collocation - Fiber Cable Support Structure, per Entrance Cable			CLO	PE1PM	19.80										
		Physical Collocation - Fiber Entrance Cable per Cable (CO manhole to vault splice)			CLO	PE1EC		1,071.00		43.10							
		Physical Collocation - Fiber Entrance Cable Installation, per Fiber			CLO	PE1ED		7.29									
VIRTUAL COLLOCATION																	
	Application																
		Virtual Collocation - Application Fee			AMTFS	EAF		2,633.00						2.07	2.81	0.67	1.41
		Virtual Collocation - Co-Carrier Cross Connects/Direct Connect, Application Fee, per application			AMTFS	VE1CA		585.09									
		Virtual Collocation Administrative Only - Application Fee			AMTFS	VE1AF		743.25									
	Space Preparation																
		Virtual Collocation - Floor Space, per sq. ft.			AMTFS	ESPVX	3.91										
	Power																
		Virtual Collocation - Power, per fused amp			AMTFS	ESPAX	6.79										
	Cross Connects (Cross Connects, Co-Carrier Cross Connects, and Ports)																
		Virtual Collocation - 2-wire cross-connect, loop, provisioning			UEANL, UEA, UDN, UAL, UHL, UCL, UEQ, UNCVX, UNCDX, UNCNX	UEAC2	0.57	11.62	9.90	10.38	8.66			2.07	2.81	0.67	1.41
		Virtual Collocation - 4-wire cross-connect, loop, provisioning			UEA, UHL, UCL, UDL, UNCVX, UNCDX	UEAC4	0.57	11.81	10.04	10.44	8.67			2.07	2.81	0.67	1.41
		Virtual collocation - Special Access & UNE, cross-connect per DS1			ULR, UXTD1, UNC1X, ULDD1, U1TD1, USLEL, UNLD1, USL, UEPEX, UEPDX	CNC1X	1.32	32.22	17.76	10.46	8.75			2.07	2.81	0.67	1.41
		Virtual collocation - Special Acess & UNE, cross-connect per DS3			USL, UE3, U1TD3, UXTS1, UXTD3, UNC3X, UNCSX, ULDD3, U1TS1, ULDS1, UDLSX, UNLD3	CND3X	12.32	29.97	16.30	12.03	8.99			2.07	2.81	0.67	1.41

COLLOCATION - Tennessee														Attachment: 4 Exh B			
CATEGORY		RATE ELEMENTS	Interim	Zone	BCS	USOC	RATES($)					Svc Order Submitted Elec per LSR	Svc Order Submitted Manually per LSR	Incremental Charge - Manual Svc Order vs. Electronic-1st	Incremental Charge - Manual Svc Order vs. Electronic-Add'l	Incremental Charge - Manual Svc Order vs. Electronic-Disc 1st	Incremental Charge - Manual Svc Order vs. Electronic-Disc Add'l
								Nonrecurring		Nonrecurring Disconnect		OSS Rates($)					
							Rec	First	Add'l	First	Add'l	SOMEC	SOMAN	SOMAN	SOMAN	SOMAN	SOMAN
		Virtual Collocation - 2-Fiber Cross Connects			UDL12, UDLO3, U1T48, U1T12, U1TO3, ULDO3, ULD12, ULD48, UDF	CNC2F	3.03	41.56	29.82	12.96	10.34			2.69	2.69	1.56	1.56
		Virtual Collocation - 4-Fiber Cross Connects			UDL12, UDLO3, U1T48, U1T12, U1TO3, ULDO3, ULD12, ULD48, UDF	CNC4F	6.06	50.53	38.78	16.97	14.35			2.69	2.69	1.56	1.56
		Virtual Collocation - Co-Carrier Cross Connects/Direct Connect - Fiber Cable Support Structure, per linear foot, per cable			AMTFS	VE1CB	0.0013										
		Virtual Collocation - Co-Carrier Cross Connects/Direct Connect - Copper/Coax Cable Support Structure, per linear foot, per cable			AMTFS	VE1CD	0.0019										
		Virtual Collocation 2-Wire Cross Connect, Port			UEPSX, UEPSB, UEPSE, UEPSP, UEPSR, UEP2C	VE1R2	0.57	11.62	9.90	10.38	8.66			20.35	10.54	13.32	1.40
		Virtual Collocation 4-Wire Cross Connect, Port			UEPDD, UEPEX	VE1R4	0.57	11.81	10.04	10.44	8.67			20.35	10.54	13.32	1.40
	CFA																
		Virtual Collocation - CFA Information Resend Request, per Premises, per Arrangement, per request			AMTFS	VE1QR		77.67									
	Cable Records																
		Virtual Collocation Cable Records - per request			AMTFS	VE1BA		1,711.00									
		Virtual Collocation Cable Records - VG/DS0 Cable, per cable record			AMTFS	VE1BB		925.06									
		Virtual Collocation Cable Records - VG/DS0 Cable, per each 100 pair			AMTFS	VE1BC		18.05									
		Virtual Collocation Cable Records - DS1, per T1TIE			AMTFS	VE1BD		8.45									
		Virtual Collocation Cable Records - DS3, per T3TIE			AMTFS	VE1BE		29.57									
		Virtual Collocation Cable Records - Fiber Cable, per 99 fiber records			AMTFS	VE1BF		279.42									
		Virtual Collocation Cable Records - CAT 5/RJ45			AMTFS	VE1B5		8.45									
	Security																
		Virtual collocation - Security escort, basic time, normally scheduled work hours			AMTFS	SPTBX		33.15	20.44					2.07	2.81	0.67	1.41
		Virtual collocation - Security escort, overtime, outside of normally scheduled work hours on a normal working day			AMTFS	SPTOX		41.50	25.61					2.07	2.81	0.67	1.41
		Virtual collocation - Security escort, premium time, outside of a scheduled work day			AMTFS	SPTPX		49.86	30.79					2.07	2.81	0.67	1.41
	Maintenance																
		Virtual collocation - Maintenance in CO - Basic, per half hour			AMTFS	CTRLX		30.64						2.07	2.81	0.67	1.41
		Virtual collocation - Maintenance in CO - Overtime, per half hour			AMTFS	SPTOM		35.77						2.07	2.81	0.67	1.41
		Virtual collocation - Maintenance in CO - Premium per half hour			AMTFS	SPTPM		40.90						2.07	2.81	0.67	1.41
	Entrance Cable																
		Virtual Collocation - Cable Installation Charge, per cable			AMTFS	ESPCX		1,749.00						2.07	2.81	0.67	1.41
		Virtual Collocation - Cable Support Structure, per cable			AMTFS	ESPSX	17.87										
COLLOCATION IN THE REMOTE SITE																	
	Physical Remote Site Collocation																
		Physical Collocation in the Remote Site - Application Fee			CLORS	PE1RA		580.20		312.76							
		Cabinet Space in the Remote Site per Bay/ Rack			CLORS	PE1RB	220.41										
		Physical Collocation in the Remote Site - Security Access - Key			CLORS	PE1RD		24.69									
		Physical Collocation in the Remote Site - Space Availability Report per Premises Requested			CLORS	PE1SR		218.49									

COLLOCATION - Tennessee														Attachment: 4 Exh B			
CATEGORY	RATE ELEMENTS	Interim	Zone	BCS	USOC	RATES($)					Svc Order Submitted Elec per LSR	Svc Order Submitted Manually per LSR	Incremental Charge - Manual Svc Order vs. Electronic-1st	Incremental Charge - Manual Svc Order vs. Electronic-Add'l	Incremental Charge - Manual Svc Order vs. Electronic-Disc 1st	Incremental Charge - Manual Svc Order vs. Electronic-Disc Add'l
						Rec	Nonrecurring		Nonrecurring Disconnect		OSS Rates($)					
							First	Add'l	First	Add'l	SOMEC	SOMAN	SOMAN	SOMAN	SOMAN	SOMAN
	Physical Collocation in the Remote Site - Remote Site CLLI Code Request, per CLLI Code Requested			CLORS	PE1RE		70.81									
	Remote Site DLEC Data (BRSDD), per Compact Disk, per CO			CLORS	PE1RR		234.15									
	Physical Collocation - Security Escort for Basic Time - normally scheduled work, per half hour			CLORS	PE1BT		33.91	21.49								
	Physical Collocation - Security Escort for Overtime - outside of normally scheduled working hours on a scheduled work day, per half hour			CLORS	PE1OT		44.17	27.76								
	Physical Collocation - Security Escort for Premium Time - outside of scheduled work day, per half hour			CLORS	PE1PT		54.42	34.02								
	Adjacent Remote Site Collocation															
	Remote Site-Adjacent Collocation-Application Fee			CLORS	PE1RU		755.62	755.62								
	Remote Site-Adjacent Collocation - Real Estate, per square foot			CLORS	PE1RT	0.134										
	Remote Site-Adjacent Collocation - AC Power, per breaker amp			CLORS	PE1RS	6.27										
	NOTE: If Security Escort and/or Add'l Engineering Fees become necessary for adjacent remote site collocation, the Parties will negotiate appropriate rates.															
	Virtual Remote Site Collocation															
	Virtual Collocation in the Remote Site - Application Fee			VE1RS	VE1RB		580.20		312.76							
	Virtual Collocation in the Remote Site - Per Bay/Rack of Space			VE1RS	VE1RC	220.41										
	Virtual Collocation in the Remote Site - Space Availability Report per Premises requested			VE1RS	VE1RR		218.49									
	Virtual Collocation in the Remote Site - Remote Site CLLI Code Request, per CLLI Code Requested			VE1RS	VE1RL		70.81									
ADJACENT COLLOCATION																
	Adjacent Collocation - Space Charge per Sq. Ft.			CLOAC	PE1JA	0.0656										
	Adjacent Collocation - Electrical Facility Charge per Linear Ft.			CLOAC	PE1JC	5.53										
	Adjacent Collocation - 2-Wire Cross-Connects			UEANL,UEQ,UEA,UCL, UAL, UHL, UDN	PE1JE	0.34	11.12	10.18	11.33	10.23			1.77	1.77	1.12	1.12
	Adjacent Collocation - 4-Wire Cross-Connects			UEA,UHL,UDL,UCL	PE1JF	0.33	11.30	10.31	11.62	10.44			1.77	1.77	1.12	1.12
	Adjacent Collocation - DS1 Cross-Connects			USL	PE1JG	1.70	28.39	16.88	11.65	10.54			1.77	1.77	1.12	1.12
	Adjacent Collocation - DS3 Cross-Connects			UE3	PE1JH	19.03	26.23	15.51	13.40	10.77			1.77	1.77	1.12	1.12
	Adjacent Collocation - 2-Fiber Cross-Connect			CLOAC	PE1JJ	3.49	26.23	15.51	13.41	10.78			1.77	1.77	1.12	1.12
	Adjacent Collocation - 4-Fiber Cross-Connect			CLOAC	PE1JK	6.50	29.75	19.02	17.60	14.97			1.77	1.77	1.12	1.12
	Adjacent Collocation - Application Fee			CLOAC	PE1JB		2,973.00		0.95				0.00	0.00	0.00	0.00
	Adjacent Collocation - 120V, Single Phase Standby Power Rate per AC Breaker Amp			CLOAC	PE1JL	5.81										
	Adjacent Collocation - 240V, Single Phase Standby Power Rate per AC Breaker Amp			CLOAC	PE1JM	11.64										
	Adjacent Collocation - 120V, Three Phase Standby Power Rate per AC Breaker Amp			CLOAC	PE1JN	17.45										
	Adjacent Collocation - 277V, Three Phase Standby Power Rate per AC Breaker Amp			CLOAC	PE1JO	40.30										
	Note: Rates displaying an "I" in Interim column are interim as a result of a Commission order.															

Attachment 5

Access to Numbers and Number Portability

TABLE OF CONTENTS

1. Non-Discriminatory Access to Telephone Numbers..... 3

2. Local Number Portability 4

3. Service Order Charges..... 5

4. LNP In Conjunction with Local Switching..... 5

ACCESS TO NUMBERS AND NUMBER PORTABILITY

1. Non-Discriminatory Access to Telephone Numbers

1.1 During the term of this Agreement, where Access Point is utilizing its own switch, Access Point shall contact the North American Numbering Plan Administrator (NANPA), or, where applicable, the relevant Number Pool Administrator for the assignment of numbering resources.

1.2 Where BellSouth provides local switching or resold services to Access Point, BellSouth will provide Access Point with online access to available telephone numbers as defined by applicable FCC rules and regulations on a first come first served basis. Access Point acknowledges that such access to numbers shall be in accordance with the appropriate FCC rules and regulations. Access Point may designate up to a forecasted six (6) months supply of available numbers as intermediate (an available number provided to Access Point) telephone numbers per rate center if the following conditions are met:

1.2.1 Access Point must: (1) indicate that all of the intermediate numbers currently held by Access Point in each rate center where Access Point will be requesting intermediate telephone numbers have six (6) or less months to exhaust; (2) supply projected monthly telephone number demand on a rate center basis for the coming twelve (12) months for each rate center where Access Point will be requesting intermediate telephone numbers; and, (3) demonstrate that the utilization level on current intermediate numbers held by Access Point in the rate center where Access Point is requesting telephone numbers has reached at least seventy-five percent (75%).

1.2.2 The above information will be provided by Access Point by submitting to BellSouth a fully completed "CO Code Assignments Months To Exhaust Certification Worksheet – TN Level" (MTE Worksheet), Appendix B to the Central Office Code (NXX) Assignments Guidelines, INC 95-0407-008 for each rate center where Access Point will be requesting intermediate telephone numbers. The utilization level is calculated by dividing all intermediate numbers currently assigned by Access Point to customers by the total number of intermediate numbers held by Access Point in the rate center and multiplying the result by one hundred (100).

1.2.3 If fulfilling Access Point's request for intermediate numbers results in BellSouth having to submit a request for additional telephone numbers to a national numbering administrator (either NANPA CO Code Administration or NeuStar Pooling Administration or their successors), BellSouth will submit the required numbering request to the national numbering administrator to satisfy Access

Point's request for intermediate numbers. BellSouth will also pursue all appropriate steps (including submitting a safety valve request (petition) to the appropriate Commission if the numbering request is denied by the national administrator) to satisfy Access Point's request for intermediate numbers. In these cases, BellSouth is not obligated to fulfill the request by Access Point for intermediate numbers unless, and until, BellSouth's request for additional numbering resources is granted.

1.2.4 Access Point agrees to supply supporting information for any numbering request and/or safety valve request that BellSouth files pursuant to Section 1.2.3 above.

1.3 Access Point acknowledges that there may be instances where there is an industry shortage of available telephone numbers in a number plan area (NPA). These instances occur where a jeopardy status has been declared by NANPA and the industry has determined that limiting the assignment of new numbers is the appropriate method to employ until the jeopardy can be alleviated. In such NPA jeopardy situations where assignment of new numbers is restricted per the jeopardy guidelines developed by the industry, BellSouth may request that Access Point cancel all or a portion of its unassigned intermediate numbers. Access Point's consent to BellSouth's request shall not be unreasonably withheld.

2. Local Number Portability

2.1 The Parties will offer LNP in accordance with rules, regulations and guidelines adopted by the Commission, the FCC and industry fora.

2.2 Service Management System (SMS) Administration. The Parties will work cooperatively with other local service providers to establish and maintain contracts for the LNP SMS.

2.3 Network Architecture. The Parties agree to adhere to applicable FCC rules and orders governing LNP network architecture.

2.4 Signaling. In connection with LNP, each Party agrees to use SS7 signaling in accordance with applicable FCC rules and orders.

2.5 N-1 Query. The Parties agree to adhere to applicable FCC rules and orders governing LNP N-1 queries.

2.6 Porting of Reserved Numbers and Suspended Lines. Customers of each Party may port numbers, via LNP, that are in a denied state or that are on suspend status. In addition, customers of each Party may port reserved numbers that the customer has paid to reserve. Portable reserved numbers are identified on the Customer Service Record (CSR). In anticipation of porting from one Party to the other Party, a Party's customer may reserve additional telephone numbers and include them with the numbers that are subsequently ported to the other Party. It is not necessary to restore a denied number before it is ported.

2.7 Splitting of Number Groups. The Parties shall permit blocks of subscriber numbers (including, but not limited to, Direct Inward Dial (DID) numbers and MultiServ groups) to be split in connection with an LNP request. BellSouth and Access Point shall permit customers who port a portion of DID numbers to retain DID service on the remaining portion of numbers. If a Party requests porting a range of DID numbers smaller than a whole block, that Party shall pay the applicable charges for doing so as set forth in Attachment 2. In the event no rate is set forth in Attachment 2, then the Parties shall negotiate a rate for such services.

2.8 The Parties will set Location Routing Number (LRN) unconditional or ten (10) digit triggers where applicable. Where triggers are set, the porting Party will remove the ported number at the same time the trigger is removed.

2.9 A trigger order is a service order issued in advance of the porting of a number. A trigger order 1) initiates call queries to the AIN SS7 network in advance of the number being ported; and 2) provides for the new service provider to be in control of when a number ports.

2.10 Where triggers are not set, the Parties shall coordinate the porting of the number between service providers so as to minimize service interruptions to the customer.

2.11 BellSouth and Access Point will work cooperatively to implement changes to LNP process flows ordered by the FCC or as recommended by standard industry foras addressing LNP.

2.12 Where Access Point utilizes BellSouth's LNP Query Service, BellSouth shall bill and Access Point shall pay the query charge associated with LNP Query Service as set forth in Attachment 2. To receive the LNP Query Service charge set forth in Attachment 2, Access Point shall fill out and submit the Interconnection data sheet for BellSouth LNP Query Service. The form can be obtained on BellSouth's Interconnection Web site under BellSouth LNP Query Service and click on forms. Once the form has been filled out and submitted the LNP Query charge will take effect on the approved date. This charge is not subject to the resale discount set forth in Attachment 1.

3. Service Order Charges

3.1 The terms, conditions and rates for OSS utilized in connection with LNP are as set forth in Attachment 6 and Exhibit A of Attachment 2.

4. LNP In Conjunction with Local Switching

4.1 Where Access Point purchases local switching from BellSouth, the Parties shall adhere to the following processes:

4.1.1 When Access Point submits an LSR for services, if the telephone number associated with the services requested resides in a switch other than BellSouth's, then BellSouth will submit an LNP LSR to the appropriate switch owner. Access Point shall be responsible for reimbursing BellSouth for any costs or charges

imposed on BellSouth by the switch owner resulting from the submission of the LNP LSR. In addition, Access Point shall pay to BellSouth the manual service order charges or electronic service order charges as specified in Exhibit A of Attachment 2 for BellSouth's creation and submission of the LNP LSR to the appropriate switch owner.

4.1.2 Working telephone numbers, telephone numbers for which payment has been made to reserve and telephone numbers that are in a denied state (but not disconnected) or suspended status may be subject to porting.

Attachment 6

Pre-Ordering, Ordering, Provisioning, Maintenance and Repair

TABLE OF CONTENTS

1. Quality of Pre-Ordering, Ordering, Provisioning, Maintenance and Repair 3

2. Access to Operations Support Systems 3

3. Miscellaneous 7

PRE-ORDERING, ORDERING, PROVISIONING, MAINTENANCE AND REPAIR

1. Quality of Pre-Ordering, Ordering, Provisioning, Maintenance and Repair

1.1 BellSouth shall provide to Access Point nondiscriminatory access to its OSS and the necessary information contained therein in order that Access Point can perform the functions of pre-ordering, ordering, provisioning, maintenance and repair, and billing. BellSouth shall provide Access Point with all relevant documentation (manuals, user guides, specifications, etc.) regarding business rules and other formatting information as well as practices and procedures necessary to ensure requests are efficiently processed. All documentation will be readily accessible at BellSouth's Interconnection Web site. BellSouth shall ensure that its OSS are designed to accommodate requests for both current and projected demands of Access Point and other CLECs in the aggregate.

2. Access to Operations Support Systems

2.1 BellSouth shall provide to Access Point nondiscriminatory access to its OSS and the necessary information contained therein in order that Access Point can perform the functions of pre-ordering, ordering, provisioning, maintenance and repair, and billing. BellSouth shall provide nondiscriminatory access to the OSS through manual and/or electronic interfaces as described in this Attachment. It is the sole responsibility of Access Point to obtain the technical capability to access and utilize BellSouth's OSS interfaces. Specifications for Access Point's access and use of BellSouth's electronic interfaces are set forth at BellSouth's Interconnection Web site.

2.1.1 Access Point agrees to comply with the provisions of the OSS Interconnection Volume Guidelines as set forth at BellSouth's Interconnection Web site.

2.2 <u>Pre-Ordering</u>

2.2.1 BellSouth will provide electronic access to its OSS and the information contained therein in order that Access Point can perform the following pre-ordering functions: service address validation, telephone number selection, service and feature availability, due date information, customer record information and loop makeup information. Mechanized access is provided by electronic interfaces whose specifications for access and use are set forth at BellSouth's Interconnection Web site. The process by which the Parties will manage these electronic interfaces to include the development and introduction of new interfaces will be governed by the change management process as described in Section 2.7 below.

2.2.2 BellSouth shall provide to Access Point electronic access to customer service record information in accordance with the applicable performance intervals referenced in Attachment 9. If electronic access is not available, BellSouth shall provide to Access Point such information within twenty-four (24) hours. Access Point shall provide to BellSouth access to customer record information, including circuit numbers associated with each telephone number where applicable. Access Point shall provide such information within four (4) hours after request via electronic access where available. If electronic access is not available, Access Point shall provide to BellSouth paper copies of customer record information, including circuit numbers associated with each telephone number where applicable. Access Point shall provide to BellSouth such customer service records within twenty-four (24) hours of a valid request, exclusive of Saturdays, Sundays and holidays.

2.2.3 The Parties agree not to view, copy, or otherwise obtain access to the customer record information of any customer without that customer's permission. Access Point will obtain access to customer record information only in strict compliance with applicable laws, rules, or regulations of the state in which the service is provided. BellSouth reserves the right to audit Access Point's access to customer record information. If BellSouth has reason to believe, through its audit or by any other means, that Access Point is accessing customer record information without having obtained the proper customer authorization, BellSouth upon reasonable notice to Access Point may take corrective action, including but not limited to suspending or terminating Access Point's access to BellSouth's pre-ordering and ordering OSS, and the provisioning of pending and existing services.

2.3 Ordering

2.3.1 BellSouth will make available to Access Point electronic interfaces for the purpose of exchanging order information, including order status and completion notification, for non-complex and certain complex resale requests and certain network elements. Specifications for access and use of BellSouth's electronic interfaces are set forth at BellSouth's Interconnection Web site. The process by which the Parties will manage these electronic interfaces to include the development and introduction of new interfaces will be governed by the change management process as described in Section 2.7 below.

2.3.2 Access Point shall place orders for services by submitting a LSR to BellSouth. BellSouth shall bill Access Point an electronic service order charge at the rate set forth in the applicable Attachment to this Agreement for each LSR submitted by means of an electronic interface. BellSouth shall bill Access Point a manual service order charge at the rate set forth in the applicable Attachment to this Agreement for each LSR submitted by means other than the electronic Interfaces (e.g., mail, fax, courier, etc.). An individual LSR will be identified for billing purposes by its PON.

2.3.2.1 Access Point may submit an LSR to request that a customer's service be temporarily suspended, denied, or restored. Alternatively, Access Point may submit a list of such customers if Access Point provides a separate PON for each location on the list. BellSouth will bill an electronic or manual service order charge for each location.

2.3.2.2 BellSouth will bill the electronic or manual service order charge, as applicable, for an LSR, regardless of whether that LSR is later supplemented, clarified or cancelled.

2.3.2.3 Notwithstanding the foregoing, BellSouth will not bill an additional electronic or manual service order charge for supplements to any LSR submitted to clarify, correct, change or cancel a previously submitted LSR.

2.3.2.4 BellSouth shall return a Firm Order Confirmation (FOC) or LSR clarification in accordance with the applicable performance intervals referenced in Attachment 9. Access Point shall provide to BellSouth a FOC within twenty-four (24) hours of the receipt from BellSouth of a complete and accurate LSR, exclusive of Saturdays, Sundays and holidays. Access Point shall provide to BellSouth an LSR clarification within twenty-four (24) hours of the receipt from BellSouth of an incomplete and inaccurate LSR, exclusive of Saturdays, Sundays and holidays.

2.4 Provisioning

2.4.1 BellSouth shall provision services during its regular working hours. To the extent Access Point requests provisioning of service to be performed outside BellSouth's regular working hours, or the work so requested requires BellSouth's technicians or project managers to work outside of regular working hours, overtime charges set forth in BellSouth's intrastate Access Services Tariff, Section E13.2, shall apply. Notwithstanding the foregoing, if such work is performed outside of regular working hours by a BellSouth technician or project manager during his or her scheduled shift and BellSouth does not incur any overtime charges in performing the work on behalf of Access Point, BellSouth will not assess Access Point additional charges beyond the rates and charges specified in this Agreement.

2.4.2 In the event BellSouth must dispatch to the customer's location more than once due to incorrect or incomplete information provided by Access Point (e.g., incomplete address, incorrect contact name/number, etc.), BellSouth will bill Access Point for each additional dispatch required to provision the circuit due to the incorrect/incomplete information provided. BellSouth will assess the applicable Maintenance of Service rates from BellSouth's FCC No. 1 Tariff, Section 13.3.1.

2.4.3 Cancellation Charges. If Access Point cancels an LSR for network elements or resold services subsequent to BellSouth's generation of a service order, any costs

incurred by BellSouth in conjunction with provisioning of Services as requested on the cancelled LSR will be recovered in accordance with the cancellation methodology set forth in the Cancellation Charge Percentage Chart found on BellSouth's Interconnection Web site. In addition, BellSouth reserves the right to assess cancellation charges if Access Point fails to respond within nine (9) business days to a Missed Appointment order notification.

2.4.3.1 Notwithstanding the foregoing, if Access Point places an LSR based upon BellSouth's loop makeup information, and such information is inaccurate resulting in the inability of BellSouth to provision the network elements requested and another spare compatible facility cannot be found with the transmission characteristics of the network elements originally requested, cancellation charges described in this Section shall not apply. Where Access Point places a single LSR for multiple network elements or services based upon loop makeup information, and information as to some, but not all, of the network elements or services is inaccurate, if BellSouth cannot provision the network elements or services that were the subject of the inaccurate loop makeup information, Access Point may cancel its request for those network elements or services without incurring cancellation charges as described in this Section. In such instance, should Access Point elect to cancel the entire LSR, cancellation charges as described in this Section shall apply to those elements and services that were not the subject of inaccurate loop makeup.

2.4.4 Service Date Advancement Charges (Expedites). For Service Date Advancement requests by Access Point, Service Date Advancement charges will apply for intervals less than the standard interval as outlined in the BellSouth Product and Services Interval Guide. The charges are as set forth in Exhibit A of Attachment 2.

2.4.5 Order Modification Charges. If Access Point modifies an order after being sent a FOC from BellSouth, the Order Modification Charge (OMC) or Order Modification Charge Additional Dispatch (OMCAD) will be paid by Access Point in accordance with Exhibit A of Attachment 2.

2.5 Maintenance and Repair

2.5.1 BellSouth will make available to Access Point electronic interfaces for the purpose of reporting and monitoring service troubles. Specifications for access and use of BellSouth's maintenance and repair electronic interfaces are set forth at BellSouth's Interconnection Web site. The process by which the Parties will manage these electronic interfaces to include the development and introduction of new interfaces will be governed by the change management process as described in Section 2.7 below. Requests for trouble repair are billed in accordance with the provisions of this Agreement. BellSouth and Access Point agree to adhere to

BellSouth's Operational Understanding. The Operational Understanding may be accessed via BellSouth's Interconnection Web site.

2.5.2 If Access Point reports a trouble on a BellSouth Network Element and no trouble is found in BellSouth's network, BellSouth will charge Access Point a Maintenance of Service Charge for any dispatching and testing (both inside and outside the CO) required by BellSouth in order to confirm the working status. BellSouth will assess the applicable Maintenance of Service rates from BellSouth's FCC No. 1 Tariff, Section 13.3.1.

2.5.3 In the event BellSouth must dispatch to the customer's location more than once due to incorrect or incomplete information provided by Access Point (e.g., incomplete address, incorrect contact name/number, etc.), BellSouth will bill Access Point for each additional dispatch required to repair the circuit due to the incorrect/incomplete information provided. BellSouth will assess the applicable Maintenance of Service rates from BellSouth's FCC No. 1 Tariff, Section 13.3.1.

2.6 Billing. BellSouth will provide Access Point nondiscriminatory access to billing information as specified in Attachment 7.

2.7 Change Management. The Parties agree that the collaborative change management process known as the Change Control Process (CCP) will be used to manage changes to existing interfaces, introduction of new interfaces and retirement of interfaces. The Parties agree to comply with the provisions of the documented CCP as may be amended from time to time and incorporated herein by reference. The change management process will cover changes to BellSouth's electronic interfaces, BellSouth's testing environment, associated manual process improvements, and relevant documentation. The process will define a procedure for resolution of change management disputes. Documentation of the CCP as well as related information and processes will be clearly organized and readily accessible to Access Point at BellSouth's Interconnection Web site.

2.8 Rates. Unless otherwise specified herein, charges for the use of BellSouth's OSS, and other charges applicable to pre-ordering, ordering, provisioning and maintenance and repair, shall be at the rates set forth in the applicable Attachment of this Agreement.

2.9 The Commissions in some states have ordered per element manual additive nonrecurring charges for Network Elements and Other Services ordered by means other than one of the interactive interfaces. These ordered Network Elements and Other Services manual additive nonrecurring charges will apply in these states, rather than the charge per LSR. The per element charges are listed in Exhibit A of Attachment 2.

3. Miscellaneous

3.1 Pending Orders. To the extent that Access Point submits an LSR with incomplete, incorrect or conflicting information, BellSouth will return the LSR to Access Point for clarification. Access Point shall respond to the request for clarification within thirty (30) days by submitting a supplemental LSR. If Access Point does not submit a supplement LSR within thirty (30) days, BellSouth will cancel the original LSR and Access Point shall be required to submit a new LSR, with a new PON.

3.2 Single Point of Contact. Access Point will be the single point of contact with BellSouth for ordering activity for network elements and other services used by Access Point to provide services to its customers, except that BellSouth may accept a request directly from another CLEC, or BellSouth, acting with authorization of the affected customer. Access Point and BellSouth shall each execute a blanket LOA with respect to customer requests so that prior proof of customer authorization will not be necessary with every request (except in the case of a local service freeze). The Parties shall each be entitled to adopt their own internal processes for verification of customer authorization for requests, provided, however, that such processes shall comply with applicable state and federal law and industry and regulatory guidelines. Pursuant to a request from another carrier, BellSouth may disconnect any network element being used by Access Point to provide service to that customer and may reuse such network elements or facilities to enable such other carrier to provide service to the customer. BellSouth will notify Access Point that such a request has been processed but will not be required to notify Access Point in advance of such processing.

3.2.1 Neither Party shall prevent or delay a customer from migrating to another carrier because of unpaid bills, denied service, or contract terms.

3.2.2 Use of Facilities. When a customer of Access Point elects to discontinue service and to transfer service to another local exchange carrier, including BellSouth, BellSouth shall have the right to reuse the facilities provided to Access Point by BellSouth. In addition, where BellSouth provides local switching, BellSouth may disconnect and reuse facilities when the facility is in a denied state and BellSouth has received a request to establish new service or transfer service from a customer or from a CLEC. BellSouth will notify Access Point that such a request has been processed after the disconnect order has been completed.

3.3 Contact Numbers. The Parties agree to provide one another with toll-free nation-wide (50 states) contact numbers for the purpose of ordering, provisioning and maintenance of services. Contact numbers for maintenance/repair of services shall be staffed twenty-four (24) hours per day, seven (7) days per week. BellSouth will close trouble tickets after making a reasonable effort to contact Access Point for authorization to close a ticket. BellSouth will place trouble tickets in delayed maintenance status after making a reasonable effort to contact Access Point to request additional information or to request authorization for additional work deemed necessary by BellSouth.

3.4 Subscription Functions. In cases where BellSouth performs subscription functions for an IXC (i.e., PIC and LPIC changes via Customer Account Record Exchange (CARE)), BellSouth will in all possible instances provide the affected IXCs with the OCN of the local provider for the purpose of obtaining customer billing account and other customer information required under subscription requirements.

3.4.1 When Access Point's customer, served by resale or loop and port combinations, changes its PIC or LPIC, and per BellSouth's FCC or state tariff the interexchange carrier elects to charge the customer the PIC or LPIC change charge, BellSouth will bill the PIC or LPIC change charge to Access Point, which has the billing relationship with that customer, and Access Point may pass such charge to the customer.

Attachment 7

Billing

TABLE OF CONTENTS

1. Payment and Billing Arrangements 3
2. Billing Disputes 9
3. RAO Hosting 10
Rates……Exhibit A

BILLING

1. Payment and Billing Arrangements

The terms and conditions set forth in this Attachment shall apply to all services ordered and provisioned pursuant to this Agreement.

1.1 BellSouth will bill through the Carrier Access Billing System (CABS), Integrated Billing System (IBS) and/or the Customer Records Information Systems (CRIS) depending on the particular service(s) provided to Access Point under this Agreement. BellSouth will format all bills in CABS Billing Output Specification (CBOS) Standard or CLUB/EDI format, depending on the type of service provided. For those services where standards have not yet been developed, BellSouth's billing format may change in accordance with applicable industry standards.

1.1.1 For any service(s) BellSouth receives from Access Point, Access Point shall bill BellSouth in CBOS format.

1.1.2 Any switched access charges associated with interexchange carrier access to the resold local exchange lines will be billed by, and due to BellSouth.

1.1.3 BellSouth will render bills each month on established bill days for each of Access Point's accounts. If either Party requests multiple billing media or additional copies of the bills, the billing Party will provide these at the rates set forth in BellSouth's FCC No. 1 Tariff, Section 13.3.6.3, except for resold services which shall be at the rates set forth in BellSouth's Non-Regulated Services Pricing List N6.

1.1.4 BellSouth will bill Access Point in advance for all services to be provided during the ensuing billing period except charges associated with service usage and nonrecurring charges, which will be billed in arrears.

1.1.4.1 For resold services, charges for services will be calculated on an individual customer account level, including, if applicable, any charge for usage or usage allowances. BellSouth will also bill Access Point, and Access Point will be responsible for and remit to BellSouth, all charges applicable to said services including but not limited to 911 and E911 charges, EUCL charges, federal subscriber line charges, telecommunications relay charges, and franchise fees, unless otherwise ordered by a Commission.

1.1.5 BellSouth will not perform billing and collection services for Access Point as a result of the execution of this Agreement.

1.2 <u>Establishing Accounts and Subsequent State Certifications.</u> After submitting a credit profile and deposit, if required, and after receiving certification as a local exchange carrier from the appropriate Commission, Access Point will provide the appropriate BellSouth Local Contract Manager responsible for new CLEC activation, the necessary documentation to enable BellSouth to establish accounts for Local Interconnection, Network Elements and Other Services and/or resold services. Such documentation shall include the Application for Master Account,

if applicable, proof of authority to provide Telecommunications Services, the appropriate OCN for each state as assigned by the NECA, CIC, if applicable, ACNA, if applicable, BellSouth's blanket form LOA, Misdirected Number form, and a tax exemption certificate, if applicable. Notwithstanding anything to the contrary in this Agreement, Access Point may not order services under a new account and/or subsequent state certification, established in accordance with this Section until thirty (30) days after all information specified in this Section is received from Access Point.

1.2.1 ACNAs. Access Point shall provide BellSouth with documentation from Telcordia identifying the ACNA assigned to it by Telcordia (as applicable) in the same legal name as reflected in the preamble to this Agreement. Such ACNA will be used by Access Point to order services pursuant to this Agreement and will not be shared by Access Point with another entity.

1.2.2 Company Identifiers. If Access Point needs to change, add to, eliminate or convert its OCN(s), ACNAs and other identifying codes (collectively "Company Identifiers") under which it operates when Access Point has already been conducting business utilizing those Company Identifiers, Access Point shall follow the Mergers and Acquisitions Process as described on BellSouth's Interconnection Web site, AND SHALL PAY ALL CHARGES AS A RESULT OF SUCH CHANGES.

1.2.3 Tax Exemption. It is the responsibility of Access Point to provide BellSouth with a properly completed tax exemption certificate at intervals required by the appropriate taxing authorities. A tax exemption certificate must be supplied for each individual Access Point entity purchasing Services under this Agreement. Upon BellSouth's receipt of a properly completed tax exemption certificate, subsequent billings to Access Point will not include those taxes or fees from which Access Point is exempt. Prior to receipt of a properly completed exemption certificate, BellSouth shall bill, and Access Point shall pay all applicable taxes and fees. In the event that Access Point believes that it is entitled to an exemption from and refund of taxes with respect to the amount billed prior to BellSouth's receipt of a properly completed exemption certificate, BellSouth shall assign to Access Point its rights to claim a refund of such taxes. If applicable law prohibits the assignment of tax refund rights or requires the claim for refund of such taxes to be filed by BellSouth, BellSouth shall, after receiving a written request from Access Point and at Access Point's sole expense, pursue such refund claim on behalf of Access Point, provided that Access Point promptly reimburses BellSouth for any costs and expenses incurred by BellSouth in pursuing such refund claim, and provided further that BellSouth shall have the right to deduct any such outstanding costs and expenses from the amount of any refund obtained prior to remitting such refund to Access Point. Access Point shall be solely responsible for the computation, tracking, reporting and payment of all taxes and fees associated with the services provided by Access Point to its customers.

1.3 Deposit Policy. Prior to the inauguration of service or, thereafter, upon BellSouth's request, Access Point shall complete the BellSouth Credit Profile

(BellSouth form) and provide information to BellSouth regarding Access Point's credit and financial condition. Based on BellSouth's analysis of the BellSouth Credit Profile and other relevant information regarding Access Point's credit and financial condition, BellSouth reserves the right to require Access Point to provide BellSouth with a suitable form of security deposit for Access Point's account(s). If, in BellSouth's sole discretion, circumstances so warrant and/or Access Point's gross monthly billing has increased, BellSouth reserves the right to request additional security (or to require a security deposit if none was previously requested) and/or file a Uniform Commercial Code (UCC-1) security interest in Access Point's "accounts receivables and proceeds".

1.3.1 Security deposit shall take the form of cash, an Irrevocable Letter of Credit (BellSouth form), Surety Bond (BellSouth form) or, in BellSouth's sole discretion, some other form of security proposed by Access Point. Any such security deposit shall in no way release Access Point from its obligation to make complete and timely payments of its bill(s). If BellSouth requires Access Point to provide a security deposit, Access Point shall provide such security deposit prior to the inauguration of service or within fifteen (15) days of BellSouth's request, as applicable. Deposit request notices will be sent to Access Point via certified mail or overnight delivery. Such notice period will start the day after the deposit request notice is rendered by certified mail or overnight delivery. Interest on a cash security deposit shall accrue and be applied or refunded in accordance with the terms in BellSouth's GSST.

1.3.2 Security deposits collected under this Section shall not exceed two (2) months' estimated billing. Estimated billings are calculated based upon the monthly average of the previous six (6) months current billings, if Access Point has received service from BellSouth during such period at a level comparable to that anticipated to occur over the next six (6) months. If either Access Point or BellSouth has reason to believe that the level of service to be received during the next six (6) months will be materially higher or lower than received in the previous six (6) months, Access Point and BellSouth shall agree on a level of estimated billings based on all relevant information.

1.3.3 In the event Access Point fails to provide BellSouth with a suitable form of security deposit or additional security deposit as required herein, defaults on its account(s), or otherwise fails to make any payment or payments required under this Agreement in the manner and within the time required, service to Access Point may be Suspended, Discontinued or Terminated in accordance with the terms of Section 1.5 below. Upon Termination of services, BellSouth shall apply any security deposit to Access Point's final bill for its account(s).

1.3.3.1 At least seven (7) days prior to the expiration of any letter of credit provided by Access Point as security under this Agreement, Access Point shall renew such letter of credit or provide BellSouth with evidence that Access Point has obtained a suitable replacement for the letter of credit. If Access Point fails to comply with the foregoing, BellSouth shall thereafter be authorized to draw down the full amount of such letter of credit and utilize the cash proceeds as security for Access Point accounts(s). If Access Point provides a security deposit or additional

security deposit in the form of a surety bond as required herein, Access Point shall renew the surety bond or provide BellSouth with evidence that Access Point has obtained a suitable replacement for the surety bond at least seven (7) days prior to the cancellation date of the surety bond. If Access Point fails to comply with the foregoing, BellSouth shall thereafter be authorized to take action on the surety bond and utilize the cash proceeds as security for Access Point's account(s). If the credit rating of any bonding company that has provided Access Point with a surety bond provided as security hereunder has fallen below B, BellSouth will provide written notice to Access Point that Access Point must provide a replacement bond or other suitable security within fifteen (15) days of BellSouth's written notice. If Access Point fails to comply with the foregoing, BellSouth shall thereafter be authorized to take action on the surety bond and utilize the cash proceeds as security for Access Point's account(s). Notwithstanding anything contained in this Agreement to the contrary, BellSouth shall be authorized to draw down the full amount of any letter of credit or take action on any surety bond provided by Access Point as security hereunder if Access Point defaults on its account(s) or otherwise fails to make any payment or payments required under this Agreement in the manner and within the time, as required herein.

1.4 Payment Responsibility. Payment of all undisputed charges will be the responsibility of Access Point. Access Point shall pay invoices by utilizing wire transfer services or automatic clearing house services. Access Point shall make payment to BellSouth for all services billed excluding disputed amounts. BellSouth will not become involved in billing disputes that may arise between Access Point and Access Point's customer.

1.4.1 Payment Due. Payment for services provided by BellSouth, excluding disputed charges, is due on or before the next bill date. Information required to apply payments must accompany the payment. The information must notify BellSouth of Billing Account Numbers (BAN) paid; invoices paid and the amount to be applied to each BAN and invoice (Remittance Information). Payment is considered to have been made when the payment and Remittance Information are received by BellSouth. If the Remittance Information is not received with payment, BellSouth will be unable to apply amounts paid to Access Point's accounts. In such event, BellSouth shall hold such funds until the Remittance Information is received. If BellSouth does not receive the Remittance Information by the payment due date for any account(s), late payment charges shall apply.

1.4.1.1 Due Dates. If the payment due date falls on a Sunday or on a holiday that is observed on a Monday, the payment due date shall be the first non-holiday day following such Sunday or holiday. If the payment due date falls on a Saturday or on a holiday which is observed on Tuesday, Wednesday, Thursday, or Friday, the payment due date shall be the last non-holiday day preceding such Saturday or holiday. If payment is not received by the payment due date, a late payment charge, as set forth in Section 1.4.1.2, below, shall apply.

1.4.1.2 Late Payment. If any portion of the payment is not received by BellSouth on or before the payment due date as set forth above, or if any portion of the payment is received by BellSouth in funds that are not immediately available to BellSouth, then a late payment and/or interest charge shall be due to BellSouth. The late payment and/or interest charge shall apply to the portion of the payment not received and shall be assessed as set forth in Section A2 of BellSouth's GSST, Section B2 of the Private Line Service Tariff or Section E2 of the BellSouth intrastate Access Services Tariff, or pursuant to the applicable state law as determined by BellSouth. In addition to any applicable late payment and/or interest charges, Access Point may be charged a fee for all returned checks at the rate set forth in Section A2 of BellSouth's GSST or pursuant to the applicable state law. If BellSouth resolves a billing dispute, in whole or in part, in favor of Access Point and if Access Point has withheld payment for the disputed amounts, the portion of any late payment and/or interest charges related to the credit due to Access Point shall also be credited to Access Point's account. (Dialog A7, Para 1.4.1.2)

1.5 Discontinuing Service to Access Point. The procedures for discontinuing service to Access Point are as follows:

1.5.1 In order of severity, Suspend/Suspension, Discontinue/Discontinuance and Terminate/Termination are defined as follows for the purposes of this Attachment:

1.5.1.1 Suspend/Suspension is the temporary restriction of the billed Party's access to the ordering systems and/or access to the billed Party's ability to initiate PIC-related changes. In addition, during Suspension, pending orders may not be completed and orders for new service or changes to existing services may not be accepted.

1.5.1.2 Discontinue/Discontinuance is the denial of service by the billing Party to the billed Party that will result in the disruption and discontinuation of service to the billed Party's customers. Additionally, at the time of Discontinuance, BellSouth will remove any Local Service Freezes in place on the billed Party's customers.

1.5.1.3 Terminate/Termination is the disconnection of service by the billing Party to the billed Party.

1.5.2 BellSouth reserves the right to Suspend, Discontinue or Terminate service in the event of prohibited, unlawful or improper use of BellSouth facilities or service, abuse of BellSouth facilities, or any other violation or noncompliance by Access Point of the rules and regulations of BellSouth's tariffs.

1.5.3 Suspension. If payment of amounts due as described herein is not received by the bill date in the month after the original bill date, or fifteen (15) days from the date of a deposit request in the case of security deposits, BellSouth will provide written notice to Access Point that services will be Suspended if payment of such amounts, and all other amounts that become past due before Suspension, is not received by wire transfer, automatic clearing house or cashier's check in the manner set forth in Section 1.4.1 above, or in the case of a security deposit request, in the manner set forth in Section 1.3.1 above: (1) within seven (7) days

following such notice for CABS billed services; (2) within fifteen (15) days following such notice for CRIS and IBS billed services; and (3) within seven (7) days following such notice for security deposit requests.

1.5.3.1 The Suspension notice shall also provide that all past due charges for CRIS and IBS billed services, and all other amounts that become past due for such services before Discontinuance, must be paid within thirty (30) days from the date of the Suspension notice to avoid Discontinuance of CRIS and IBS billed services.

1.5.3.2 For CABS billed services, BellSouth will provide a Discontinuance notice that is separate from the Suspension notice, that all past due charges for CABS billed Services, and all other amounts that become past due for such services before Discontinuance, must be paid within thirty (30) days from the date of the Suspension notice to avoid Discontinuance of CABS billed services. This Discontinuance notice may be provided at the same time that BellSouth provides the Suspension notice.

1.5.4 Discontinuance. If payment of amounts due as described herein is not received by the bill date in the month after the original bill date, BellSouth will provide written notice that BellSouth may Discontinue the provision of existing services to Access Point if payment of such amounts, and all other amounts that become past due before Discontinuance, including requested security deposits, is not received by wire transfer, automatic clearing house or cashier's check in the manner set forth in Section 1.4.1 above or in the case of a deposit in accordance with Section 1.3.1 above, within thirty (30) days following such written notice; provided, however, that BellSouth may provide written notice that such existing services may be Discontinued within fifteen (15) days following such notice, subject to the criteria described in Section 1.5.4.1 below.

1.5.4.1 BellSouth may take the action to Discontinue the provision of existing service upon fifteen (15) days from the day after BellSouth provides written notice of such Discontinuance if (a) such notice is sent by certified mail or overnight delivery; (b) Access Point has not paid all amounts due pursuant to a subject bill(s), or has not provided adequate security pursuant to a deposit request; and (c) either:

(1) BellSouth has sent the subject bill(s) to Access Point within seven (7) business days of the bill date(s), verifiable by records maintained by BellSouth:

i. in paper or CDROM form via the United States Postal Service (USPS), or
ii. in magnetic tape form via overnight delivery, or
iii. via electronic transmission; or

(2) BellSouth has sent the subject bill(s) to Access Point, using one of the media described in (1) above, more than thirty (30) days before notice to Discontinue service has been rendered.

1.5.4.2 In the case of Discontinuance of services, all billed charges, as well as applicable disconnect charges, shall become due.

1.5.4.3 Access Point is solely responsible for notifying the customer of the Discontinuance of service. If, within seven (7) days after Access Point's services have been Discontinued, Access Point pays, by wire transfer, automatic clearing house or cashier's check, all past due charges, including late payment charges, outstanding security deposit request amounts if applicable and any applicable restoral charges as set forth in Section A4 of BellSouth's GSST, then BellSouth will reestablish service for Access Point.

1.5.5 Termination. If within seven (7) days after Access Point's service has been Discontinued and Access Point has failed to pay all past due charges as described above, then Access Point's service will be Terminated.

2. Billing Disputes

2.1 Access Point shall electronically submit all billing disputes to BellSouth using the form specified by BellSouth. In the event of a billing dispute, the Parties will endeavor to resolve the dispute within sixty (60) days of the notification date. Within eight (8) business days of BellSouth's denial, or partial denial, of the billing dispute, if Access Point is not satisfied with BellSouth's resolution of the billing dispute or if no response to the billing dispute has been received by Access Point by such sixtieth (60th) day, Access Point must pursue the escalation process as outlined in the Billing Dispute Escalation Matrix, set forth on BellSouth's Interconnection Services Web site, or the billing dispute shall be considered denied and closed. If, after escalation, the Parties are unable to reach resolution, then the aggrieved Party, if it elects to pursue the dispute shall pursue dispute resolution in accordance with General Terms and Conditions.

2.2 For purposes of this Section 2, a billing dispute means a reported dispute submitted pursuant to Section 2.1 above of a specific amount of money actually billed by BellSouth. within twelve (12) months of the submission of such dispute. Access Point agrees to not submit billing disputes for amounts billed more than twelve (12) months prior to submission of a billing dispute filed for amounts billed. The billing dispute must be clearly explained by Access Point and supported by written documentation, which clearly shows the basis for disputing charges. Disputes that are not clearly explained or those that do not provide complete information may be rejected by BellSouth. Claims by Access Point for damages of any kind will not be considered a billing dispute for purposes of this Section. If BellSouth resolves the billing dispute, in whole or in part, in favor of Access Point, any credits and interest due to Access Point as a result therof shall be applied to Access Point's account by BellSouth upon resolution of the billing dispute.

3. RAO Hosting

3.1 Centralized Message Distribution System (CMDS) is a national message exchange system administered by Telcordia Technologies (Telcordia) used to transmit alternately billed calls (e.g., credit card, third number and collect) from

the Earning Company, as defined herein, to the Billing Company, as defined herein, to permit the Earning Company and the Billing Company to receive appropriate compensation. It is also used to transmit access records from one company to another.

3.2 Direct Participants are Telecommunications carriers that exchange data directly with other Direct Participants via the CMDS Data Center and may act as host companies (Host) for those Telecommunications carriers that do not exchange data directly via the CMDS Data Center (Indirect Participants).

3.3 RAO Hosting is a hosting relationship where an Indirect Participant sends and receives CMDS eligible messages to and from its Host, who then interfaces, on behalf of the Indirect Participant, with other Direct Participants for distribution and collection of these messages. RAO Hosting also includes the Direct Participant's provision of revenue settlements functions (compensation) for alternately billed calls based upon reports generated by Credit Card and Third Number Settlement (CATS) and Non-InterCompany Settlement (NICS) as described herein. CATS and NICS are collectively referred to as Intercompany Settlements.

3.4 The CATS System is a national system administered by Telcordia, used to settle revenues for calls that are sent from one CMDS Direct Participant to another for billing. CATS applies to calls that originate within one Regional Bell Operating Company's (RBOC) territory, as defined at Divestiture, and bill in another RBOC's territory. CATS calculates the amounts due to Earning Companies (i.e., billed revenue less the billing and collection fee). For alternately billed calls, the originating company, whose facilities are used to place the call, is the Earning Company and the company that puts the charges on the customer's bill is the Billing Company

3.5 The NICS is the national system administered by Telcordia that is used in the settlement of revenues for calls that are originated and billed by two (2) different local exchange carriers (LEC) within a single Direct Participant's territory to another for billing. NICS applies to calls involving another LEC where the Earning Company and the Billing Company are located within BellSouth's territory.

3.6 RAO Hosting, CATS and NICS services provided to Access Point by BellSouth will be in accordance with the methods and practices regularly applied by BellSouth to its own operations during the term of this Agreement, including such revisions as may be made from time to time by BellSouth.

3.7 Access Point shall furnish all relevant information required by BellSouth for the provision of RAO Hosting, CATS and NICS.

3.8 Charges or credits, as applicable, will be applied by BellSouth to Access Point on a monthly basis in arrears. Amounts due (excluding adjustments) are due on or before the next bill date.

3.9 Access Point must have its own unique hosted RAO code. Where BellSouth is the selected CMDS interfacing host, Access Point must request that BellSouth

establish a unique hosted RAO code for Access Point. Such request shall be in writing to the BellSouth RAO Hosting coordinator and must be submitted at least eight (8) weeks prior to provision of services pursuant to this Section. Services shall commence on a date mutually agreed by the Parties.

3.10 BellSouth will receive messages from Access Point that are to be processed by BellSouth, another Local Exchange Carrier (LEC) in the BellSouth region or a LEC outside the BellSouth region. Access Point shall send all messages to BellSouth no later than sixty (60) days after the message date.

3.11 BellSouth will perform invoice sequence checking, standard EMI format editing, and balancing of message data with the EMI trailer record counts on all data received from Access Point.

3.12 All data received from Access Point that is to be processed or billed by another LEC within the BellSouth region will be distributed to that LEC in accordance with the Agreement(s) in effect between BellSouth and the involved LEC.

3.13 All data received from Access Point that is to be placed on the CMDS network for distribution outside the BellSouth region will be handled in accordance with the agreement(s) in effect between BellSouth and its connecting contractor.

3.14 BellSouth will receive messages from the CMDS network that are destined to be processed by Access Point and will forward them to Access Point on a daily basis for processing.

3.15 Transmission of message data between BellSouth and Access Point will be distributed via FTP mailbox. It will be created on a daily basis Monday through Friday, except holidays. Details such as dataset name and delivery schedule will be addressed during negotiations of the distribution medium. If BellSouth determines the Secure FTP Mailbox is nearing capacity levels, BellSouth may move Access Point to CONNECT:Direct file delivery.

3.15.1 If Access Point is moved to CONNECT:Direct, data circuits (private line or dial-up) may be required between BellSouth and Access Point for the purpose of data transmission. Where a dedicated line is required, Access Point will be responsible for ordering the circuit, overseeing its installation and coordinating the installation with BellSouth. Access Point will also be responsible for any charges associated with this line. Equipment required on the BellSouth end to attach the line to the mainframe computer and to transmit successfully ongoing will be negotiated on an individual case basis. Where a dial-up facility is required, dial circuits will be installed in the BellSouth data center by BellSouth and the associated charges assessed to Access Point. Additionally, all message toll charges associated with the use of the dial circuit by Access Point will be the responsibility of Access Point. Associated equipment on the BellSouth end, including a modem, will be negotiated on an individual case basis between the Parties. All equipment, including modems and software, that is required on the Access Point end for the purpose of data transmission will be the responsibility of Access Point.

3.15.2 If Access Point utilizes FTP for data file transmission, purchase of the FTP software will be the responsibility of Access Point.

3.16 All messages and related data exchanged between BellSouth and Access Point will be EMI formatted records and packed between appropriate EMI header and trailer records in accordance with accepted industry standards.

3.17 Access Point will maintain recorded message detail necessary to recreate files provided to BellSouth for a period of three (3) calendar months beyond the related message dates.

3.18 Should it become necessary for Access Point to send data to BellSouth more than sixty (60) days past the message date(s), Access Point will notify BellSouth in advance of the transmission of the data. BellSouth will work with its connecting contractor and/or Access Point, where necessary, to notify all affected LECs.

3.19 In the event that data to be exchanged between the two (2) Parties should become lost or destroyed, the Party responsible for creating the data will make every effort to restore and retransmit such data.

3.20 Should an error be detected by the EMI format edits performed by BellSouth on data received from Access Point, the entire pack containing the affected data will not be processed by BellSouth. BellSouth will notify Access Point of the error. Access Point will correct the error(s) and will resend the entire pack to BellSouth for processing. In the event that an out-of-sequence condition occurs on subsequent packs, Access Point will resend these packs to BellSouth after the pack containing the error has been successfully reprocessed by BellSouth.

3.21 In association with message distribution service, BellSouth will provide Access Point with associated intercompany settlements reports (CATS and NICS) as appropriate.

3.22 Notwithstanding anything in this Agreement to the contrary, in no case shall either Party be liable to the other for any direct or consequential damages incurred as a result of the obligations set out in this Section 3.

3.23 <u>Intercompany Settlements Messages</u>

3.23.1 Intercompany Settlements Messages facilitate the settlement of revenues associated with traffic originated from or billed by Access Point as a facilities based provider of local exchange Telecommunications Services.

3.23.2 BellSouth will receive the monthly NICS and CATS reports from Telcordia on behalf of Access Point and will distribute copies of these reports to Access Point on a monthly basis.

3.23.3 Through CATS, BellSouth will collect the revenue earned by Access Point from the RBOC in whose territory the messages are billed, less a per message billing and collection fee of five cents ($0.05), or such other amount as may be approved by the Direct Participants and Telcordia, on behalf of Access Point. BellSouth will remit the revenue billed by Access Point to the RBOC in whose territory the messages originated, less a per message billing and collection fee of five cents ($0.05), or such other amount as may be approved by the Direct Participants and

Telcordia, on behalf of Access Point. These two (2) amounts will be netted together by BellSouth and the resulting charge or credit issued to Access Point via a CABS miscellaneous bill on a monthly basis in arrears.

3.23.4 Through NICS, BellSouth will collect the revenue earned by Access Point within the BellSouth territory from another LEC also within the BellSouth territory where the messages are billed, less a per message billing and collection fee of five cents ($0.05), on behalf of Access Point. BellSouth will remit the revenue billed by Access Point within the BellSouth region to the LEC also within the BellSouth region, where the messages originated, less a per message billing and collection fee of five cents ($0.05). These two (2) amounts will be netted together by BellSouth and the resulting charge or credit issued to Access Point via a CABS miscellaneous bill on a monthly basis in arrears.

3.23.5 BellSouth and Access Point agree that monthly netted amounts of less than fifty dollars ($50.00) will not be settled.

4. Rates. Rates for CMDS are as set forth in Exhibit A. If no rate is identified in this Attachment, the rate for the specific service or function will be as set forth in the applicable BellSouth tariff or as negotiated by the Parties upon request by either Party.

CMDS - Alabama														Attachment: 7 Exh A			
CATEGORY		RATE ELEMENTS	Interim	Zone	BCS	USOC		RATES($)				Svc Order Submitted Elec per LSR	Svc Order Submitted Manually per LSR	Incremental Charge - Manual Svc Order vs. Electronic-1st	Incremental Charge - Manual Svc Order vs. Electronic-Add'l	Incremental Charge - Manual Svc Order vs. Electronic-Disc 1st	Incremental Charge - Manual Svc Order vs. Electronic-Disc Add'l
							Rec	Nonrecurring		Nonrecurring Disconnect		OSS Rates($)					
								First	Add'l	First	Add'l	SOMEC	SOMAN	SOMAN	SOMAN	SOMAN	SOMAN
CMDS																	
	CENTRALIZED MESSAGE DISTRIBUTION SERVICE (CMDS)																
		CMDS: Message Processing, per message					0.004										
		CMDS: Data Transmission (CONNECT:DIRECT), per message					0.001										

CMDS - Florida														Attachment: 7 Exh A			
CATEGORY		RATE ELEMENTS	Interim	Zone	BCS	USOC		RATES($)				Svc Order Submitted Elec per LSR	Svc Order Submitted Manually per LSR	Incremental Charge - Manual Svc Order vs. Electronic-1st	Incremental Charge - Manual Svc Order vs. Electronic-Add'l	Incremental Charge - Manual Svc Order vs. Electronic-Disc 1st	Incremental Charge - Manual Svc Order vs. Electronic-Disc Add'l
							Rec	Nonrecurring		Nonrecurring Disconnect		OSS Rates($)					
								First	Add'l	First	Add'l	SOMEC	SOMAN	SOMAN	SOMAN	SOMAN	SOMAN
CMDS																	
	CENTRALIZED MESSAGE DISTRIBUTION SERVICE (CMDS)																
		CMDS: Message Processing, per message					0.004										
		CMDS: Data Transmission (CONNECT:DIRECT), per message					0.001										

CMDS - Georgia														Attachment: 7 Exh A			
CATEGORY		RATE ELEMENTS	Interim	Zone	BCS	USOC		RATES($)				Svc Order Submitted Elec per LSR	Svc Order Submitted Manually per LSR	Incremental Charge - Manual Svc Order vs. Electronic-1st	Incremental Charge - Manual Svc Order vs. Electronic-Add'l	Incremental Charge - Manual Svc Order vs. Electronic-Disc 1st	Incremental Charge - Manual Svc Order vs. Electronic-Disc Add'l
							Rec	Nonrecurring		Nonrecurring Disconnect		OSS Rates($)					
								First	Add'l	First	Add'l	SOMEC	SOMAN	SOMAN	SOMAN	SOMAN	SOMAN
ODUF																	
	CENTRALIZED MESSAGE DISTRIBUTION SERVICE (CMDS)																
		CMDS: Message Processing, per message					0.004										
		CMDS: Data Transmission (CONNECT:DIRECT), per message					0.001										

CMDS - Kentucky														Attachment:	Attachment: 7 Exh A		
CATEGORY		RATE ELEMENTS	Interim	Zone	BCS	USOC	RATES($)					Svc Order Submitted Elec per LSR	Svc Order Submitted Manually per LSR	Incremental Charge - Manual Svc Order vs. Electronic-1st	Incremental Charge - Manual Svc Order vs. Electronic-Add'l	Incremental Charge - Manual Svc Order vs. Electronic-Disc 1st	Incremental Charge - Manual Svc Order vs. Electronic-Disc Add'l
							Rec	Nonrecurring		Nonrecurring Disconnect		OSS Rates($)					
								First	Add'l	First	Add'l	SOMEC	SOMAN	SOMAN	SOMAN	SOMAN	SOMAN
CMDS																	
	CENTRALIZED MESSAGE DISTRIBUTION SERVICE (CMDS)																
		CMDS: Message Processing, per message					0.004										
		CMDS: Data Transmission (CONNECT:DIRECT), per message					0.001										

CMDS - Louisiana														Attachment:	Attachment: 7 Exh A		
CATEGORY		RATE ELEMENTS	Interim	Zone	BCS	USOC	RATES($)					Svc Order Submitted Elec per LSR	Svc Order Submitted Manually per LSR	Incremental Charge - Manual Svc Order vs. Electronic-1st	Incremental Charge - Manual Svc Order vs. Electronic-Add'l	Incremental Charge - Manual Svc Order vs. Electronic-Disc 1st	Incremental Charge - Manual Svc Order vs. Electronic-Disc Add'l
							Rec	Nonrecurring		Nonrecurring Disconnect		OSS Rates($)					
								First	Add'l	First	Add'l	SOMEC	SOMAN	SOMAN	SOMAN	SOMAN	SOMAN
CMDS																	
	CENTRALIZED MESSAGE DISTRIBUTION SERVICE (CMDS)																
		CMDS: Message Processing, per message					0.004										
		CMDS: Data Transmission (CONNECT:DIRECT), per message					0.001										

CMDS - Mississippi														Attachment:	Attachment: 7 Exh A		
CATEGORY		RATE ELEMENTS	Interim	Zone	BCS	USOC	RATES($)					Svc Order Submitted Elec per LSR	Svc Order Submitted Manually per LSR	Incremental Charge - Manual Svc Order vs. Electronic-1st	Incremental Charge - Manual Svc Order vs. Electronic-Add'l	Incremental Charge - Manual Svc Order vs. Electronic-Disc 1st	Incremental Charge - Manual Svc Order vs. Electronic-Disc Add'l
							Rec	Nonrecurring		Nonrecurring Disconnect		OSS Rates($)					
								First	Add'l	First	Add'l	SOMEC	SOMAN	SOMAN	SOMAN	SOMAN	SOMAN
CMDS																	
	CENTRALIZED MESSAGE DISTRIBUTION SERVICE (CMDS)																
		CMDS: Message Processing, per message					0.004										
		CMDS: Data Transmission (CONNECT:DIRECT), per message					0.001										

CMDS - North Carolina														Attachment: 7 Exh A			
CATEGORY		RATE ELEMENTS	Interim	Zone	BCS	USOC		RATES($)				Svc Order Submitted Elec per LSR	Svc Order Submitted Manually per LSR	Incremental Charge - Manual Svc Order vs. Electronic-1st	Incremental Charge - Manual Svc Order vs. Electronic-Add'l	Incremental Charge - Manual Svc Order vs. Electronic-Disc 1st	Incremental Charge - Manual Svc Order vs. Electronic-Disc Add'l
							Rec	Nonrecurring		Nonrecurring Disconnect		OSS Rates($)					
								First	Add'l	First	Add'l	SOMEC	SOMAN	SOMAN	SOMAN	SOMAN	SOMAN
CMDS																	
	CENTRALIZED MESSAGE DISTRIBUTION SERVICE (CMDS)																
		CMDS: Message Processing, per message					0.004										
		CMDS: Data Transmission (CONNECT:DIRECT), per message					0.001										

CMDS - South Carolina														Attachment: 7 Exh A			
CATEGORY		RATE ELEMENTS	Interim	Zone	BCS	USOC		RATES($)				Svc Order Submitted Elec per LSR	Svc Order Submitted Manually per LSR	Incremental Charge - Manual Svc Order vs. Electronic-1st	Incremental Charge - Manual Svc Order vs. Electronic-Add'l	Incremental Charge - Manual Svc Order vs. Electronic-Disc 1st	Incremental Charge - Manual Svc Order vs. Electronic-Disc Add'l
							Rec	Nonrecurring		Nonrecurring Disconnect		OSS Rates($)					
								First	Add'l	First	Add'l	SOMEC	SOMAN	SOMAN	SOMAN	SOMAN	SOMAN
CMDS																	
	CENTRALIZED MESSAGE DISTRIBUTION SERVICE (CMDS)																
		CMDS: Message Processing, per message					0.004										
		CMDS: Data Transmission (CONNECT:DIRECT), per message					0.001										

CMDS - Tennessee														Attachment: 7 Exh A			
CATEGORY		RATE ELEMENTS	Interim	Zone	BCS	USOC	RATES($)					Svc Order Submitted Elec per LSR	Svc Order Submitted Manually per LSR	Incremental Charge - Manual Svc Order vs. Electronic-1st	Incremental Charge - Manual Svc Order vs. Electronic-Add'l	Incremental Charge - Manual Svc Order vs. Electronic-Disc 1st	Incremental Charge - Manual Svc Order vs. Electronic-Disc Add'l
							Rec	Nonrecurring		Nonrecurring Disconnect		OSS Rates($)					
								First	Add'l	First	Add'l	SOMEC	SOMAN	SOMAN	SOMAN	SOMAN	SOMAN
CMDS																	
	CENTRALIZED MESSAGE DISTRIBUTION SERVICE (CMDS)																
		CMDS: Message Processing, per message					0.004										
		CMDS: Data Transmission (CONNECT:DIRECT), per message					0.001										

Attachment 8

Rights-of-Way, Conduits and Pole Attachments

Rights-of-Way, Conduits and Pole Attachments

BellSouth will provide nondiscriminatory access to any pole, duct, conduit, or right-of-way owned or controlled by BellSouth pursuant to 47 U.S.C. § 224, as amended by the Act, pursuant to terms and conditions of a separate license agreement negotiated with BellSouth.

Attachment 9

Performance Measurements

Performance Measurements

Upon a particular Commission's issuance of an Order pertaining to Performance Measurements in a proceeding expressly applicable to all CLECs generally, BellSouth shall implement in that state such Performance Measurements as of the date specified by the Commission. Performance Measurements that have been Ordered in a particular state can currently be accessed via the internet at http://pmap.bellsouth.com.

Attachment 10

BellSouth Disaster Recovery Plan

CONTENTS

PAGE

1.0	Purpose	2
2.0	Single Point of Contact	2
3.0	Identifying the Problem	2
3.1	Site Control	3
3.2	Environmental Concerns	4
4.0	The Emergency Control Center (ECC)	4
5.0	Recovery Procedures	5
5.1	CLEC Outage	5
5.2	BellSouth Outage	5
5.2.1	Loss of Central Office	6
5.2.2	Loss of a Central Office with Serving Wire Center Functions	6
5.2.3	Loss of a Central Office with Tandem Functions	6
5.2.4	Loss of a Facility Hub	7
5.3	Combined Outage (CLEC and BellSouth Equipment)	7
6.0	T1 Identification Procedures	7
7.0	Acronyms	8

1.0 PURPOSE

In the unlikely event of a disaster occurring that affects BellSouth's long-term ability to deliver traffic to a CLEC, general procedures have been developed by BellSouth to hasten the recovery process in accordance with the Telecommunications Service Priority (TSP) Program established by the FCC to identify and prioritize telecommunication services that support national security or emergency preparedness (NS/EP) missions. A description of the TSP Program as it may be amended from time to time is available at the following BellSouth Interconnection Services Web site: http://interconnection.bellsouth.com/products/vertical/tsp.html. Since each location is different and could be affected by an assortment of potential problems, a detailed recovery plan is impractical. However, in the process of reviewing recovery activities for specific locations, some basic procedures emerge that appear to be common in most cases.

These general procedures should apply to any disaster that affects the delivery of traffic for an extended time period. Each CLEC will be given the same consideration during an outage, and service will be restored as quickly as possible.

This document will cover the basic recovery procedures that would apply to every CLEC.

2.0 SINGLE POINT OF CONTACT

When a problem is experienced, regardless of the severity, the BellSouth Network Management Center (NMC) will observe traffic anomalies and begin monitoring the situation. Controls will be appropriately applied to insure the sanity of BellSouth's network; and, in the event that a switch or facility node is lost, the NMC will attempt to circumvent the failure using available reroutes.

BellSouth's NMC will remain in control of the restoration efforts until the problem has been identified as being a long-term outage. At that time, the NMC will contact BellSouth's ECC and relinquish control of the recovery efforts. Even though the ECC may take charge of the situation, the NMC will continue to monitor the circumstances and restore traffic as soon as damaged network elements are revitalized.

The telephone number for the BellSouth Network Management Center in Atlanta, as published in Telcordia's National Network Management Directory, is 404-321-2516.

3.0 IDENTIFYING THE PROBLEM

During the early stages of problem detection, the NMC will be able to tell which CLECs are affected by the catastrophe. Further analysis and/or first hand observation will determine if the disaster has affected CLEC equipment only, BellSouth equipment only or a combination. The initial restoration activity will be largely determined by the equipment that is affected.

Once the nature of the disaster is determined and after verifying the cause of the problem, the NMC will initiate reroutes and/or transfers that are jointly agreed upon by the affected CLECs' Network Management Center and the BellSouth NMC. The type and percentage of controls used will depend upon available network capacity. Controls necessary to stabilize the situation will be invoked and the NMC will attempt to re-establish as much traffic as possible.

For long-term outages, recovery efforts will be coordinated by the ECC. Traffic controls will continue to be applied by the NMC until facilities are re-established. As equipment is made available for service, the ECC will instruct the NMC to begin removing the controls and allow traffic to resume.

3.1 SITE CONTROL

In the total loss of building use scenario, what likely exists will be a smoking pile of rubble. This rubble will contain many components that could be dangerous. It could also contain any personnel on the premises at the time of the disaster. For these reasons, the local fire marshal with the assistance of the police will control the site until the building is no longer a threat to surrounding properties and the companies have secured the site from the general public.

During this time, the majority owner of the building should be arranging for a demolition contractor to mobilize to the site with the primary objective of reaching the cable entrance facility for a damage assessment. The results of this assessment would then dictate immediate plans for restoration, both short term and permanent.

In a less catastrophic event, i.e., the building is still standing and the cable entrance facility is usable, the situation is more complex. The site will initially be controlled by local authorities until the threat to adjacent property has diminished. Once the site is returned to the control of the companies, the following events should occur.

An initial assessment of the main building infrastructure systems (mechanical, electrical, fire and life safety, elevators, and others) will establish building needs. Once these needs are determined, the majority owner should lead the building restoration efforts. There may be situations where the site will not be totally restored within the confines of the building. The companies must individually determine their needs and jointly assess the cost of permanent restoration to determine the overall plan of action.

Multiple restoration trailers from each company will result in the need for designated space and installation order. This layout and control is required to maximize the amount of restoration equipment that can be placed at the site, and the priority of placements.

Care must be taken in this planning to ensure other restoration efforts have logistical access to the building. Major components of telephone and building equipment will need to be removed and replaced. A priority for this equipment must also be jointly established to facilitate overall site restoration. (Example: If the AC switchgear has sustained damage, this would be of the highest priority in order to regain power, lighting, and HVAC throughout the building.)

If the site will not accommodate the required restoration equipment, the companies would then need to quickly arrange with local authorities for street closures, rights of way or other possible options available.

3.2 ENVIRONMENTAL CONCERNS

In the worse case scenario, many environmental concerns must be addressed. Along with the police and fire marshal, the state environmental protection department will be on site to monitor the situation.

Items to be concerned with in a large central office building could include:

1. Emergency engine fuel supply. Damage to the standby equipment and the fuel handling equipment could have created "spill" conditions that have to be handled within state and federal regulations.

2. Asbestos-containing materials that may be spread throughout the wreckage. Asbestos could be in many components of building, electrical, mechanical, outside plant distribution, and telephone systems.

3. Lead and acid. These materials could be present in potentially large quantities depending upon the extent of damage to the power room.

4. Mercury and other regulated compounds resident in telephone equipment.

5. Other compounds produced by the fire or heat.

Once a total loss event occurs at a large site, local authorities will control immediate clean up (water placed on the wreckage by the fire department) and site access.

At some point, the companies will become involved with local authorities in the overall planning associated with site clean up and restoration. Depending on the clean up approach taken, delays in the restoration of several hours to several days may occur.

In a less severe disaster, items listed above are more defined and can be addressed individually depending on the damage.

In each case, the majority owner should coordinate building and environmental restoration as well as maintain proper planning and site control.

4.0 THE ECC

The ECC is located in the Midtown 1 Building in Atlanta, Georgia. During an emergency, the ECC staff will convene a group of pre-selected experts to inventory the damage and initiate corrective actions. These experts have regional access to BellSouth's personnel and equipment and will assume control of the restoration activity anywhere in the nine-state area.

In the past, the ECC has been involved with restoration activities resulting from hurricanes, ice storms and floods. They have demonstrated their capabilities during these calamities as well as

during outages caused by human error or equipment failures. This group has an excellent record of restoring service as quickly as possible.

During a major disaster, the ECC may move emergency equipment to the affected location, direct recovery efforts of local personnel and coordinate service restoration activities with the CLECs. The ECC will attempt to restore service as quickly as possible using whatever means is available, leaving permanent solutions, such as the replacement of damaged buildings or equipment, for local personnel to administer.

Part of the ECC's responsibility, after temporary equipment is in place, is to support the NMC efforts to return service to the CLECs. Once service has been restored, the ECC will return control of the network to normal operational organizations. Any long-term changes required after service is restored will be made in an orderly fashion and will be conducted as normal activity.

5.0 RECOVERY PROCEDURES

The nature and severity of any disaster will influence the recovery procedures. One crucial factor in determining how BellSouth will proceed with restoration is whether or not BellSouth's equipment is incapacitated. Regardless of whose equipment is out of service, BellSouth will move as quickly as possible to aid with service recovery; however, the approach that will be taken may differ depending upon the location of the problem.

5.1 CLEC OUTAGE

For a problem limited to one CLEC (or a building with multiple CLECs), BellSouth has several options available for restoring service quickly. For those CLECs that have agreements with other CLECs, BellSouth can immediately start directing traffic to a provisional CLEC for completion. This alternative is dependent upon BellSouth having concurrence from the affected CLECs.

Whether or not the affected CLECs have requested a traffic transfer to another CLEC will not impact BellSouth's resolve to re-establish traffic to the original destination as quickly as possible.

5.2 BELLSOUTH OUTAGE

Because BellSouth's equipment has varying degrees of impact on the service provided to the CLECs, restoring service from damaged BellSouth equipment is different. The outage will probably impact a number of Carriers simultaneously. However, the ECC will be able to initiate immediate actions to correct the problem.

A disaster involving any of BellSouth's equipment locations could impact the CLECs, some more than others. A disaster at a Central Office (CO) would only impact the delivery of traffic to and from that one location, but the incident could affect many Carriers. If the CO is a Serving Wire Center (SWC), then traffic from the entire area to those Carriers served from that switch would also be impacted. If the switch functions as an Access Tandem, or there is a tandem in the building, traffic from every CO to every CLEC could be interrupted. A disaster that destroys a facility hub could disrupt various traffic flows, even though the switching equipment may be unaffected.

The NMC would be the first group to observe a problem involving BellSouth's equipment. Shortly after a disaster, the NMC will begin applying controls and finding re-routes for the completion of as much traffic as possible. These reroutes may involve delivering traffic to alternate Carriers upon receiving approval from the CLECs involved. In some cases, changes in translations will be required. If the outage is caused by the destruction of equipment, then the ECC will assume control of the restoration.

5.2.1 Loss of a CO

When BellSouth loses a CO, the ECC will

a) Place specialists and emergency equipment on notice;

b) Inventory the damage to determine what equipment and/or functions are lost;

c) Move containerized emergency equipment and facility equipment to the stricken area, if necessary;

d) Begin reconnecting service on a parity basis for Hospitals, Police and other emergency agencies or customers served by BellSouth or CLEC in accordance with the TSP priority restoration coding scheme entered in the BellSouth Maintenance database immediately prior to the emergency.

5.2.2 Loss of a CO with SWC Functions

The loss of a CO that also serves as a SWC will be restored as described in Section 5.2.1.

5.2.3 Loss of a CO with Tandem Functions

When BellSouth loses a CO building that serves as an Access Tandem and as a SWC, the ECC will

a) Place specialists and emergency equipment on notice;

b) Inventory the damage to determine what equipment and/or functions are lost;

c) Move containerized emergency equipment and facility equipment to the stricken area, if necessary;

d) Begin reconnecting service on a parity basis for Hospitals, Police and other emergency agencies or customers served by BellSouth or CLEC in accordance with the TSP priority restoration coding scheme entered in the BellSouth Maintenance database immediately prior to the emergency;

e) Re-direct as much traffic as possible to the alternate access tandem (if available) for delivery to those CLECs utilizing a different location as a SWC;

f) Begin aggregating traffic to a location near the damaged building. From this location, begin re-establishing trunk groups to the CLECs for the delivery of traffic normally

found on the direct trunk groups. (This aggregation point may be the alternate access tandem location or another CO on a primary facility route.)

5.2.4 Loss of a Facility Hub

In the event that BellSouth loses a facility hub, the recovery process is much the same as above. Once the NMC has observed the problem and administered the appropriate controls, the ECC will assume authority for the repairs. The recovery effort will include

a) Placing specialists and emergency equipment on notice;

b) Inventorying the damage to determine what equipment and/or functions are lost;

c) Moving containerized emergency equipment to the stricken area, if necessary;

d) Reconnecting service on a parity basis for Hospitals, Police and other emergency agencies or customers served by BellSouth or CLEC in accordance with the TSP priority restoration coding scheme entered in the BellSouth Maintenance database immediately prior to the emergency; and

e) If necessary, BellSouth will aggregate the traffic at another location and build temporary facilities. This alternative would be viable for a location that is destroyed and building repairs are required.

5.3 COMBINED OUTAGE (CLEC AND BELLSOUTH EQUIPMENT)

In some instances, a disaster may impact BellSouth's equipment as well as the CLECs'. This situation will be handled in much the same way as described in Section 5.2.3. Since BellSouth and the CLECs will be utilizing temporary equipment, close coordination will be required.

6.0 T1 IDENTIFICATION PROCEDURES

During the restoration of service after a disaster, BellSouth may be forced to aggregate traffic for delivery to a CLEC. During this process, T1 traffic may be consolidated onto DS3s and may become unidentifiable to the Carrier. Because resources will be limited, BellSouth may be forced to "package" this traffic entirely differently than normally received by the CLECs. Therefore, a method for identifying the T1 traffic on the DS3s and providing the information to the Carriers is required.

7.0 ACRONYMS

CLEC	-	Competitive Local Exchange Carrier
CO	-	Central Office (BellSouth)
DS3	-	Facility that carries 28 T1s (672 circuits)
ECC	-	Emergency Control Center (BellSouth)
NMC	-	Network Management Center
SWC	-	Serving Wire Center (BellSouth switch)
T1	-	Facility that carries 24 circuits
TSP	-	Telecommunications Service Priority

Hurricane Information

During a hurricane, BellSouth will make every effort to keep CLECs updated on the status of our network. Information centers will be set up throughout BellSouth Telecommunications. These centers are not intended to be used for escalations, but rather to keep the CLEC informed of network related issues, area damages and dispatch conditions, etc.

Hurricane-related information can also be found on line at http://www.interconnection.bellsouth.com/network/disaster/index.html. Information concerning Mechanized Disaster Reports can also be found at this Web site by clicking on CURRENT MDR REPORTS or by going directly to http://www.interconnection.bellsouth.com/network/disaster/mdrdocs.html.

BST Disaster Management Plan

BellSouth maintenance centers have geographical and redundant communication capabilities. In the event of a disaster removing any maintenance center from service another geographical center would assume maintenance responsibilities. The contact numbers will not change and the transfer will be transparent to the CLEC.

Attachment 11

Bona Fide Request and New Business Request Process

BONA FIDE REQUEST AND NEW BUSINESS REQUEST PROCESS

1. **Bona Fide Request**

1.1 The Parties agree that Access Point is entitled to order any Network Element, interconnection option or service option required to be made available by FCC or Commission requirements pursuant to the Act. A Bona Fide Request (BFR) is to be used when Access Point makes a request of BellSouth to provide a new or modified Network Element, interconnection option or other service option pursuant to the Act that was not previously provided for in this Agreement.

1.2 A BFR shall be submitted in writing by Access Point and shall specifically identify the requested service date, technical requirements, space requirements and/or such other specifications that clearly define the request such that BellSouth has sufficient information to analyze and prepare a response. Such a request shall also include Access Point's designation of the request as being pursuant to the Telecommunications Act of 1996 (i.e., a BFR). The request shall be sent to Access Point's designated BellSouth Sales contact or Local Contract Manager (LCM).

1.3 Within two (2) business days of receipt of a BFR, BellSouth shall acknowledge in writing its receipt and identify a single point of contact responsible for responding to the BFR and shall request any additional information needed to process the request to the extent known at that time. Notwithstanding the foregoing, BellSouth may reasonably request additional information from Access Point at any time during the processing of the BFR.

1.4 Within thirty (30) business days of BellSouth's receipt of the BFR, if the preliminary analysis of the requested BFR is not of such complexity that it will cause BellSouth to expend extraordinary resources to evaluate the BFR, BellSouth shall respond to Access Point by providing a preliminary analysis of the new or modified Network Element or interconnection option not ordered by the FCC or Commission that is the subject of the BFR. The preliminary analysis shall either confirm that BellSouth will offer access to the new or modified Network Element, interconnection option or service option or confirm that BellSouth will not offer the new or modified Network Element, interconnection option or service option.

1.5 For any new or modified Network Element, interconnection option or service option not ordered by the FCC or Commission, if the preliminary analysis states that BellSouth will offer the new or modified Network Element, interconnection option or service option, the preliminary analysis will include an estimate of the costs of utilizing existing resources, both personnel and systems, in the development including, but not limited to,

request parameters analysis, determination of impacted BellSouth departments, determination of required resources, project management resources, etc. (Development Rate) including a general breakdown of such costs associated with the Network Element, interconnection option or service option and the date the request can be met. If the preliminary analysis states that BellSouth will not offer the new or modified Network Element, interconnection option or service option, BellSouth will provide an explanation of why the request is not technically feasible, does not qualify as a BFR for the new or modified Network Element, interconnection option or service option, should actually be submitted as a New Business Request (NBR) or is otherwise not required to be provided under the Act. If BellSouth cannot provide the Network Element, interconnection option or service option by the requested date, BellSouth shall provide an alternative proposed date together with a detailed explanation as to why BellSouth is not able to meet Access Point's requested date.

1.6 For any new or modified Network Element, interconnection option or service option not ordered by the FCC or Commission, if BellSouth determines that the preliminary analysis of the requested BFR is of such complexity that it will cause BellSouth to expend extraordinary resources to evaluate the BFR, BellSouth shall notify Access Point within ten (10) business days of BellSouth's receipt of BFR that a fee will be required prior to the preliminary evaluation of the BFR. Such fee shall be limited to BellSouth's extraordinary expenses directly related to the complex request that require the allocation and engagement of additional resources above the existing allocated resources used on BFR cost development which include, but are not limited to, expenditure of funds to develop feasibility studies, specific resources that are required to determine request requirements (such as operation support system analysts, technical managers, software developers), software impact analysis by specific software developers; software architecture development, hardware impact analysis by specific system analysts, etc. and the request for such fee shall be accompanied with a general breakdown of such costs. If Access Point accepts the complex request evaluation fee proposed by BellSouth, Access Point shall submit such fee within thirty (30) business days of BellSouth's notice that a complex request evaluation fee is required. Within thirty (30) business days of BellSouth's receipt of the complex request evaluation fee, BellSouth shall respond to Access Point by providing a preliminary analysis, consistent with Section 1.4 above.

1.7 Access Point may cancel a BFR at any time up until thirty (30) business days after receiving BellSouth's preliminary analysis. If Access Point cancels the BFR within thirty (30) business days after receipt of BellSouth's preliminary analysis, BellSouth shall be entitled to keep any complex request evaluation fee submitted in accordance with Section 1.6

above, minus those costs included in the fee that have not been incurred as of the date of cancellation.

1.8 Access Point will have thirty (30) business days from receipt of preliminary analysis to accept the preliminary analysis or cancel the BFR. If Access Point fails to respond within this thirty (30) business day period, the BFR will be deemed cancelled. Acceptance of the preliminary analysis must be in writing and accompanied by the estimated Development Rate for the new or modified Network Element, interconnection option or service option quoted in the preliminary analysis**.**

1.9 Notwithstanding any other provision of this Agreement, BellSouth shall propose a firm price quote, including the firm Development Rate, the firm nonrecurring rate and the firm recurring rate, and a detailed implementation plan within ten (10) business days of receipt of Access Point's accurate BFR application for a Network Element, interconnection option or service option that is operational at the time of the request; thirty (30) business days of receipt of Access Point's accurate BFR application for a new or modified Network Element, interconnection option or service option ordered by the FCC or Commission; and within sixty (60) business days of receipt of Access Point's accurate BFR application for a new or modified Network Element, interconnection option or service option not ordered by the FCC or Commission or not operational at the time of the request. The firm nonrecurring rate will not include any of the Development Rate or the complex request evaluation fee, if required, in the calculation of this rate. Such firm price quote shall not exceed the estimate provided with the preliminary analysis by more than twenty-five percent (25%).

1.10 Access Point shall have thirty (30) business days from receipt of firm price quote to accept or deny the firm price quote and submit any additional Development or nonrecurring rates quoted in the firm price quote.

1.11 Unless Access Point agrees otherwise, all prices shall be consistent with the applicable pricing principles and provisions of the Act.

1.12 If Access Point believes that BellSouth's firm price quote is not consistent with the requirements of the Act, either Party may seek dispute resolution in accordance with the dispute resolution provisions set forth in General Terms and Conditions.

1.13 Upon agreement to the rates, terms and conditions of a BFR, the Parties shall negotiate in good faith an amendment to this Agreement.

2 New Business Request

2.1 Access Point also shall be permitted to request the development of new or modified facilities or service options which may not be required by the Act. Procedures applicable to requesting the addition of such elements, services and options are specified in this Attachment. A NBR is to be used by Access Point to make a request of BellSouth for a new or modified feature or capability of an existing product or service, a new product or service that is not deployed within the BellSouth network or operations and business support systems, or a new or modified service option that was not previously included in this Agreement (Requested NBR Services) and is not required by the Act.

2.2 An NBR shall be submitted in writing by Access Point and shall specifically identify the requested service date, technical requirements, space requirements and/or such specifications that clearly define the request such that BellSouth has sufficient information to analyze and prepare a response. The request shall be sent to Access Point's designated BellSouth Sales contact or LCM.

2.3 Within two (2) business days of receipt of an NBR, BellSouth shall acknowledge in writing its receipt and identify a single point of contact responsible for responding to the NBR and shall request any additional information needed to process the request to the extent known at that time. Notwithstanding the foregoing, BellSouth may reasonably request additional information from Access Point at any time during the processing of the NBR.

2.4 If the preliminary analysis of the requested NBR is not of such complexity that it will cause BellSouth to expend extraordinary resources to evaluate the NBR, within thirty (30) business days of its receipt of the NBR, BellSouth shall respond to Access Point by providing a preliminary analysis of such Requested NBR Services that are the subject of the NBR. The preliminary analysis shall either confirm that BellSouth will offer access to the Requested NBR Services or confirm that BellSouth will not offer the Requested NBR Services.

2.5 If the preliminary analysis states that BellSouth will offer the Requested NBR Services, the preliminary analysis will include an estimate of the Development Rate including a general breakdown of costs and the date the request can be met. If BellSouth cannot provide the Requested NBR Service by the requested date, it shall provide an alternative proposed date together with a detailed explanation as to why BellSouth is not able to meet Access Point's requested date.

2.6 If BellSouth determines that the preliminary analysis of the requested NBR is of such complexity that it will cause BellSouth to expend extraordinary resources to evaluate the NBR, BellSouth shall notify

Access Point within ten (10) business days of BellSouth's notice that a complex request evaluation fee is required prior to the evaluation of the NBR. Such fee shall be limited to BellSouth's extraordinary expenses directly related to the complex request. If Access Point accepts the complex request evaluation fee amount proposed by BellSouth, Access Point shall submit such complex request evaluation fee within thirty (30) business days of BellSouth's notice that a complex request evaluation fee is required.

2.7 Within thirty (30) business days of BellSouth's receipt of the complex request evaluation fee, BellSouth shall respond to Access Point by providing a preliminary analysis of such Requested NBR Services.

2.8 Access Point may cancel an NBR at any time. If Access Point cancels the request more than ten (10) business days after submitting it, Access Point shall pay BellSouth's reasonable and demonstrable costs of processing and/or implementing the NBR up to the date of cancellation in addition to any fee submitted in accordance with Section 1.6 above.

2.9 Access Point will have thirty (30) business days from receipt of the preliminary analysis to accept the preliminary analysis or cancel the NBR. If Access Point fails to respond within this thirty (30) business day period, the NBR will be deemed cancelled.

2.10 Acceptance of the preliminary analysis must be in writing and accompanied by the estimated Development Rate for the Requested NBR Services quoted in the preliminary analysis.

2.11 BellSouth shall propose a firm price quote including the firm Development Rate, the firm nonrecurring rate, and the firm recurring rate, and a detailed implementation plan within ten (10) business days of receipt of Access Point's accurate NBR application for a Requested NBR Service that is operational at the time of the request and within sixty (60) business days of receipt of Access Point's accurate NBR application for the Requested NBR Services not operational at the time of the request. The firm nonrecurring rate will not include any of the Development Rate or the complex request evaluation fee, if required, in the calculation of this rate. Such firm price quote shall not exceed the estimate provided with the preliminary analysis by more than twenty-five percent (25%).

2.12 Access Point shall have thirty (30) business days from receipt of the firm price quote to accept or deny the firm price quote and submit any additional nonrecurring, non-refundable fees quoted in the firm price quote. If the firm price quote is less than the preliminary analysis' estimate of the Development Rate, BellSouth will credit Access Point's account for the difference.

2.13 Upon agreement to the rates, terms and conditions of a NBR, an amendment to this Agreement, or a separate agreement, may be required and the Parties shall negotiate such agreement or amendment in good faith.